APPEXDIX A, B and C

Paktika ANA Garrison

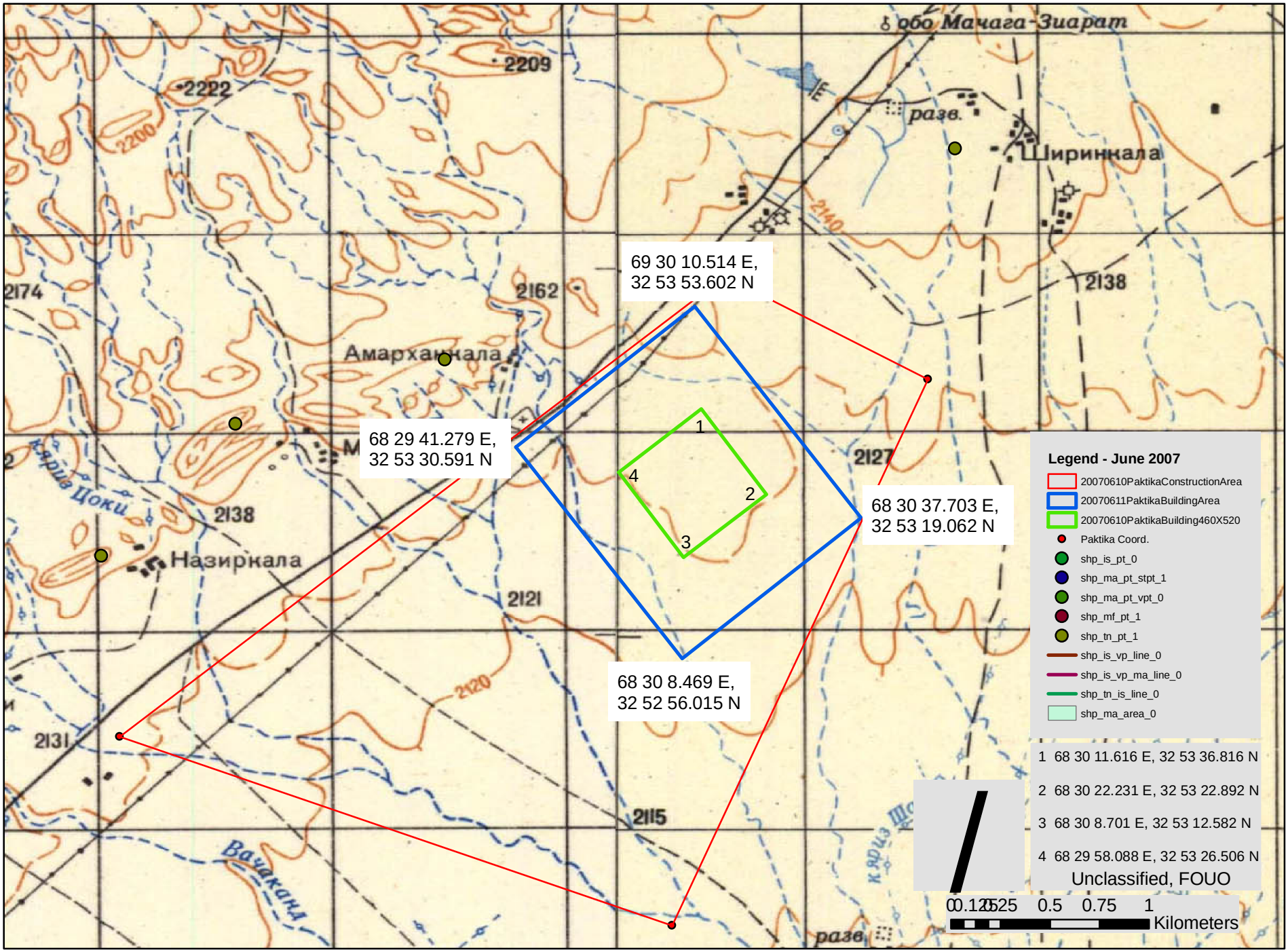

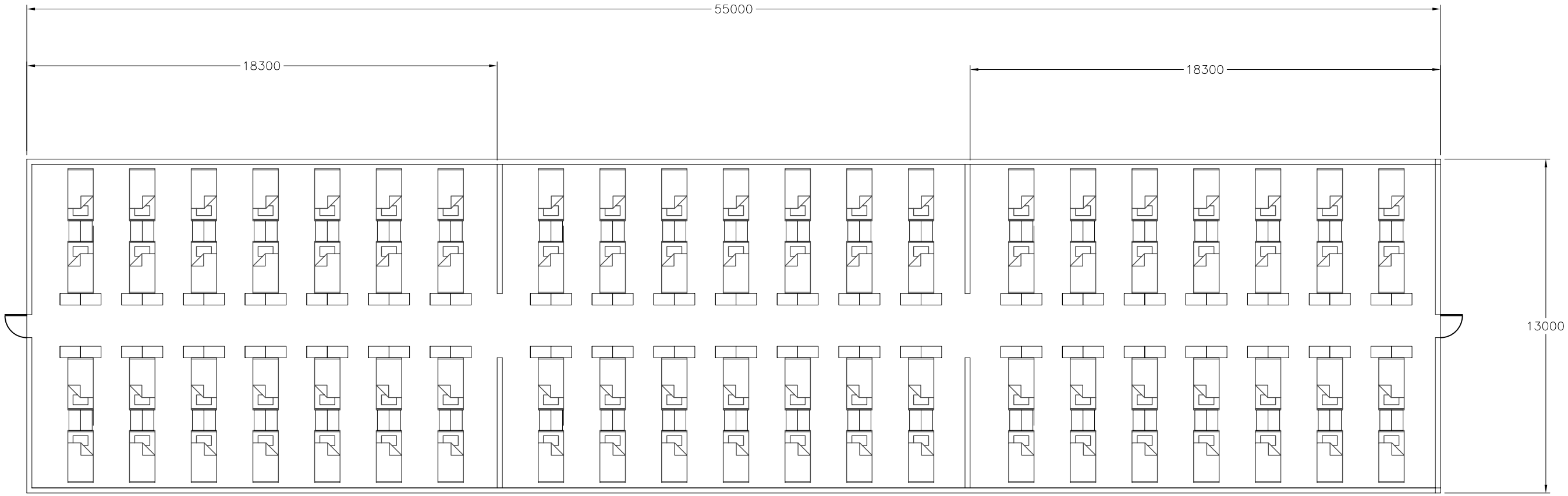

BARRACKS A 160 ENLISTED MAN 715 SQ. METER

SCALE 0 m 2 m 6 m 10 m

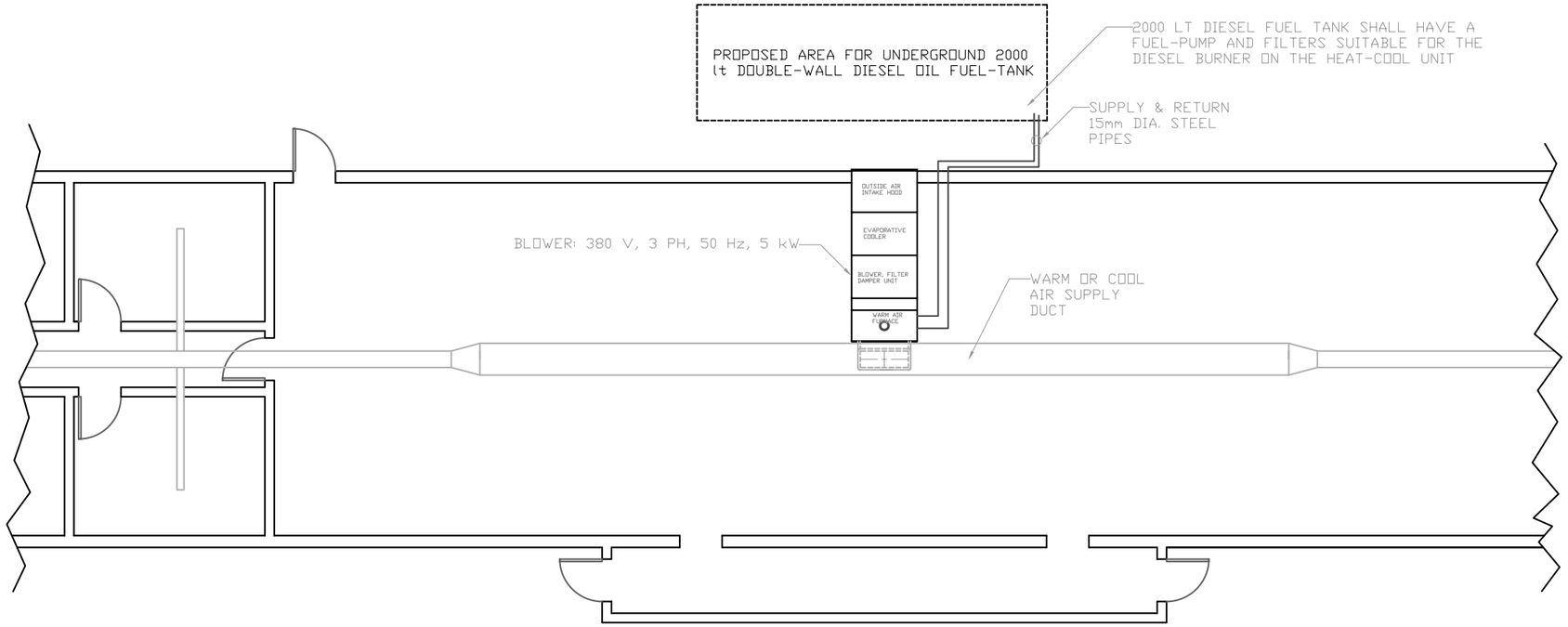

TYPICAL BARRACKS, PLAN VIEW

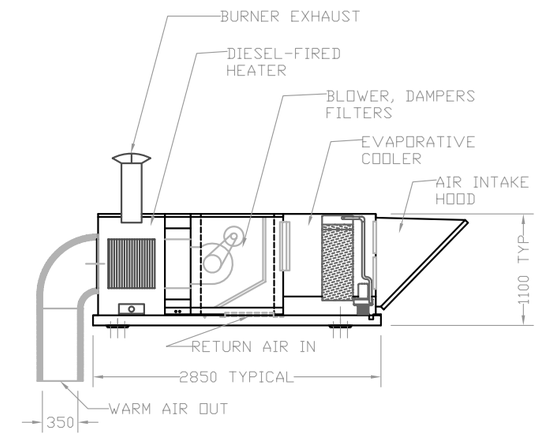

HEAT-COOL UNIT (82 tkW HEAT; 8 to 10 ton COOL
SCALE X 2

TYPICAL HEAT-COOL UNIT: TRANE MODEL 30-35 (OR EQUAL), 102 tkW INPUT MODIFIED WITH A DIESEL BURNER. BLOWER RANGE 2.5 TO 3.0 m3/s (9,000 TO 10,800 m3/h) HEATING, 25% OUTSIDE AIR; AND 3.0 TO 4.0 m3/s (10,800 TO 14,400 m3/h) EVAPORATIVE COOLING, 100% OUTSIDE AIR.

TYPICAL ROOF INSTALLATION AND SUPPLY AIR DUCTS, ROOF STRUCTURE MUST SAFELY SUPPORT TWO (2) TIMES THE ACTUAL WEIGHT OF THE HEAT-COOL UNIT.

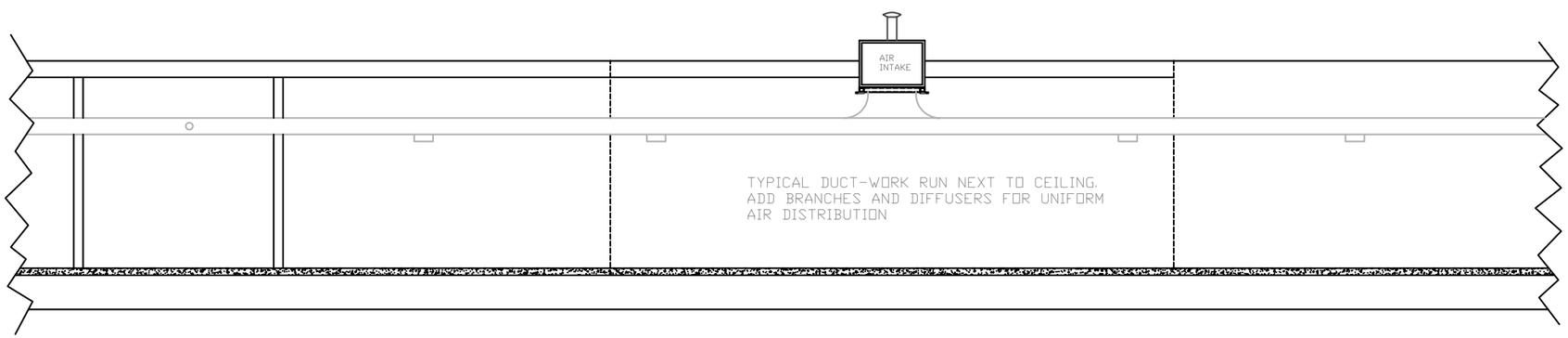

TYPICAL BARRACKS, EVEVATION (WINDOWS NOT SHOWN)

TYICAL BARRACKS HEAT-COOL ROOF INSTALLATION

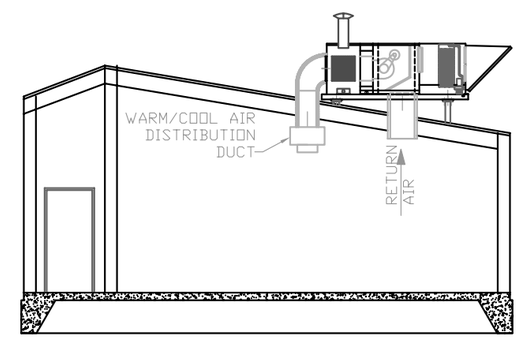

THIS HEAT-COOL UNIT (DIESEL-FIRED, EVAPORATIVE-COOLED) WILL NOT BE INSTALLED WHERE OTHER TYPES OF HVAC EQUIPMENT HAS BEEN SPECIFIED, i.e. HEAT-PUMPS, CENTRAL REFRIGERATION A/C UNITS, OR SPLIT-PAC'S.

THE HEAT-COOL UNIT MOUNTING ARRANGEMENTS FOR OFFICES, MAINTENANCE GARAGES, WAREHOUSES SHALL BE DESIGNED FOR THOSE PURPOSES.

INSTALL A 2000 lt (2 m3) DOUBLE-WALL UNDERGROUND STEEL DIESEL OIL TANK WITH A 15 lt/h FUEL (220 V, 1 PH, 50 Hz) AT THE TANK; AND CONNECTED TO THE HEAT UNIT WITH 15mm DIAMETER SUPPLY & RETURN STEEL PIPE. THE U-G DIESEL FUEL TANK TO BE LOCATED AS NEAR TO EACH HEAT UNIT AS SAFETY ALLOWS.

SCHEMATIC FOR HEAT-COOL UNITS CONTRACTOR SHALL PROVIDE FINAL DESIGN, EQUIPMENT SIZING, STRUCTURAL SUPPORT, AND DRAWINGS AT 65% REVIEW. AS REQUIRED FOR EACH BUILDING.

CJ-1

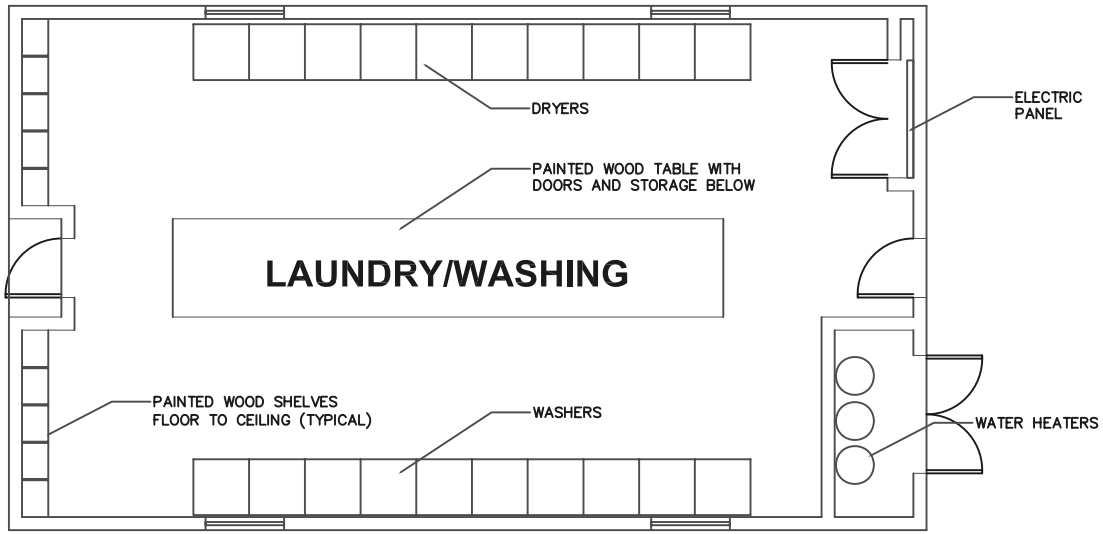

112 SQ METERS

LAUNDRY

SCALE 0 m 2 m 6 m 10 m

SHEET A-17

NORTH

NOTE:

NORTH ARROW INDICATED REFERS TO THE RELATIVE ORIENTATION OF THIS PLAN. IF FINAL ORIENTATION CHANGES THEN THE RESTROOM ORIENTATIONS MUST CHANGE.

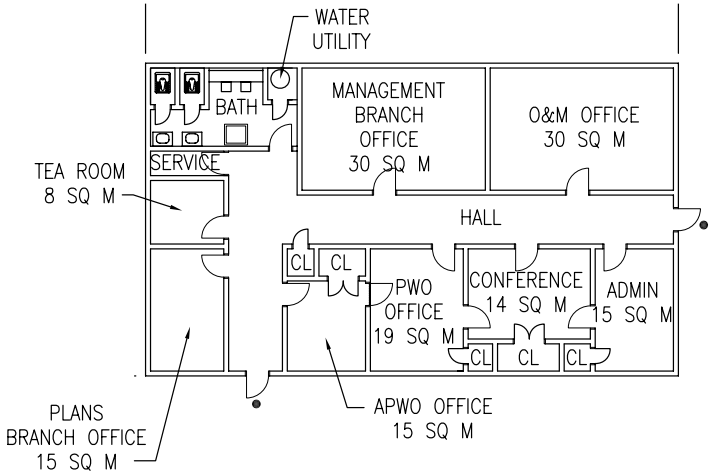

LEGEND

- EMERGENCY EXIT

PUBLIC WORKS DEPARTMENT

0 2000 4000 8000

SCALE: 1 = 200

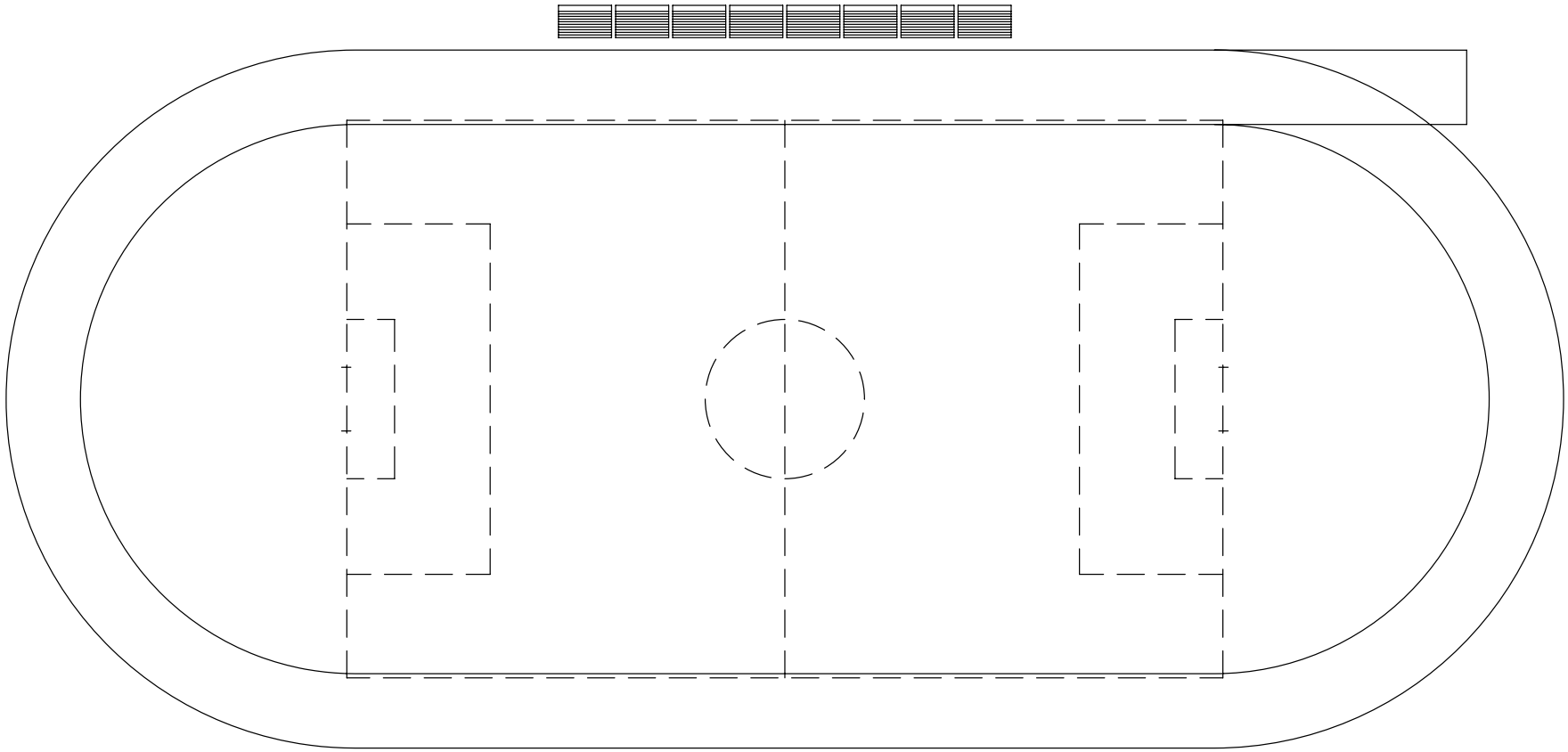

SOCCER FIELD / RUNNING TRACK

TOTAL AREA TRACK = 3709.83 SQ M

TOTAL AREA SOCCER FIELD = 6438.18 SQ M

0 5000 10000 20000

SCALE: 1 : 500

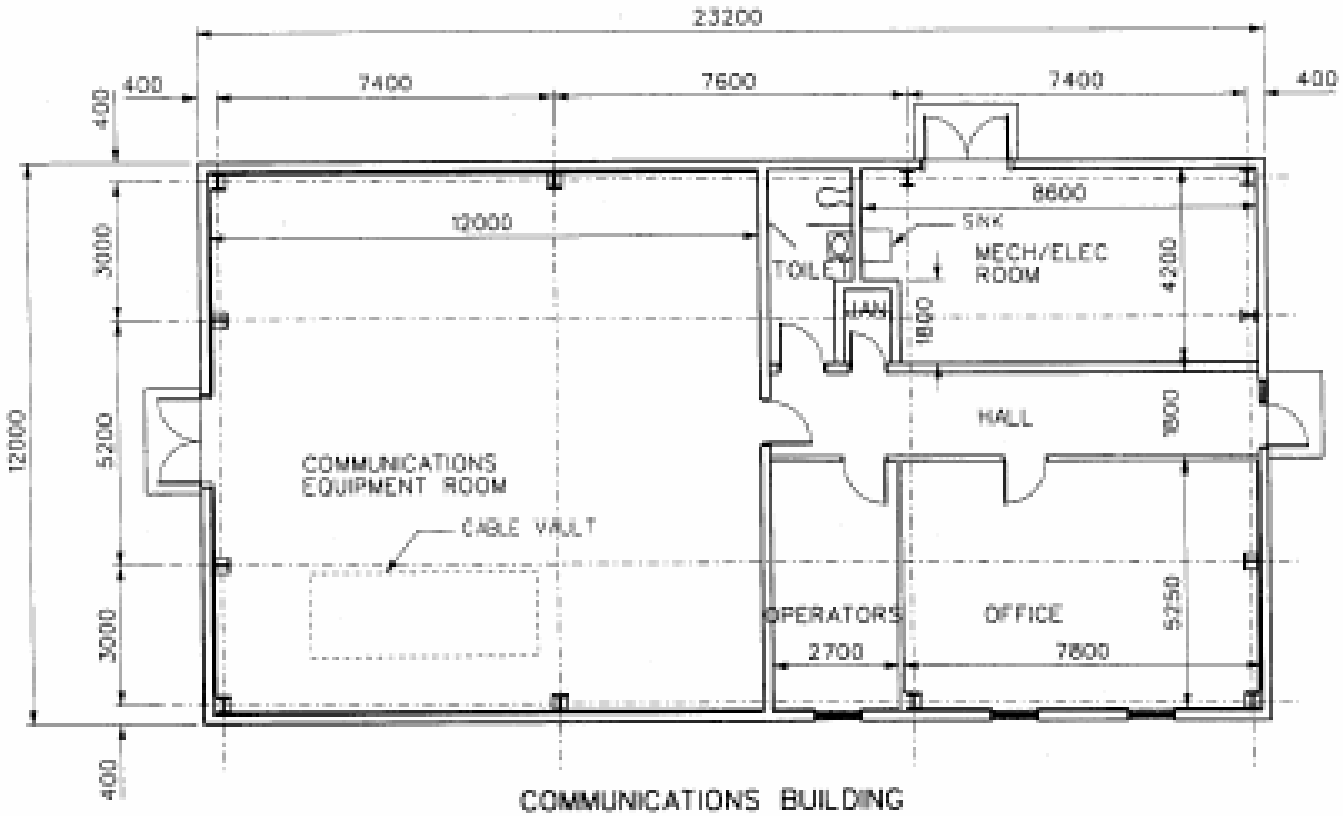

COMMUNICATIONS BUILDING
278 m2

1 0 1 2 3 4 5 6 7 8 9
100

ANA
REGIONAL BRIGADE
AFGHANISTAN
15 FEB 05

NORTH

NOTE:

NORTH ARROW INDICATED REFERS TO THE RELATIVE ORIENTATION OF THIS PLAN. IF FINAL ORIENTATION CHANGES THEN THE RESTROOM ORIENTATIONS MUST CHANGE.

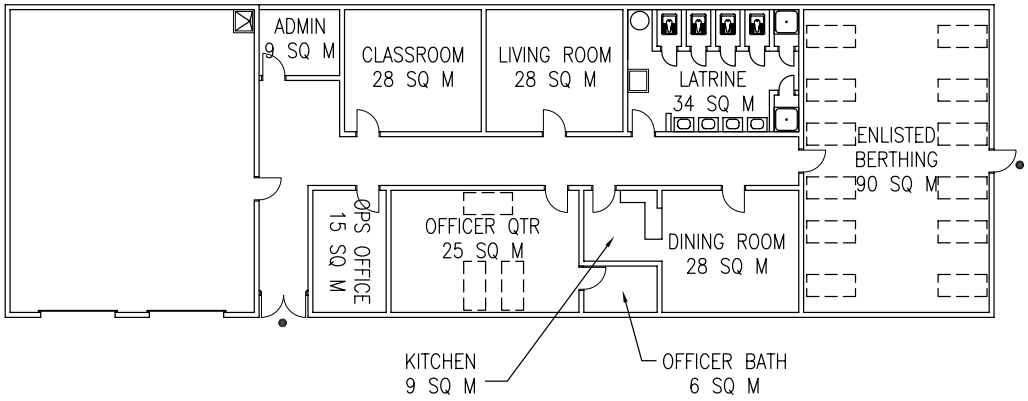

LEGEND

- EMERGENCY EXIT

FIRE STATION

0 2000 4000 8000

SCALE: 1 = 200

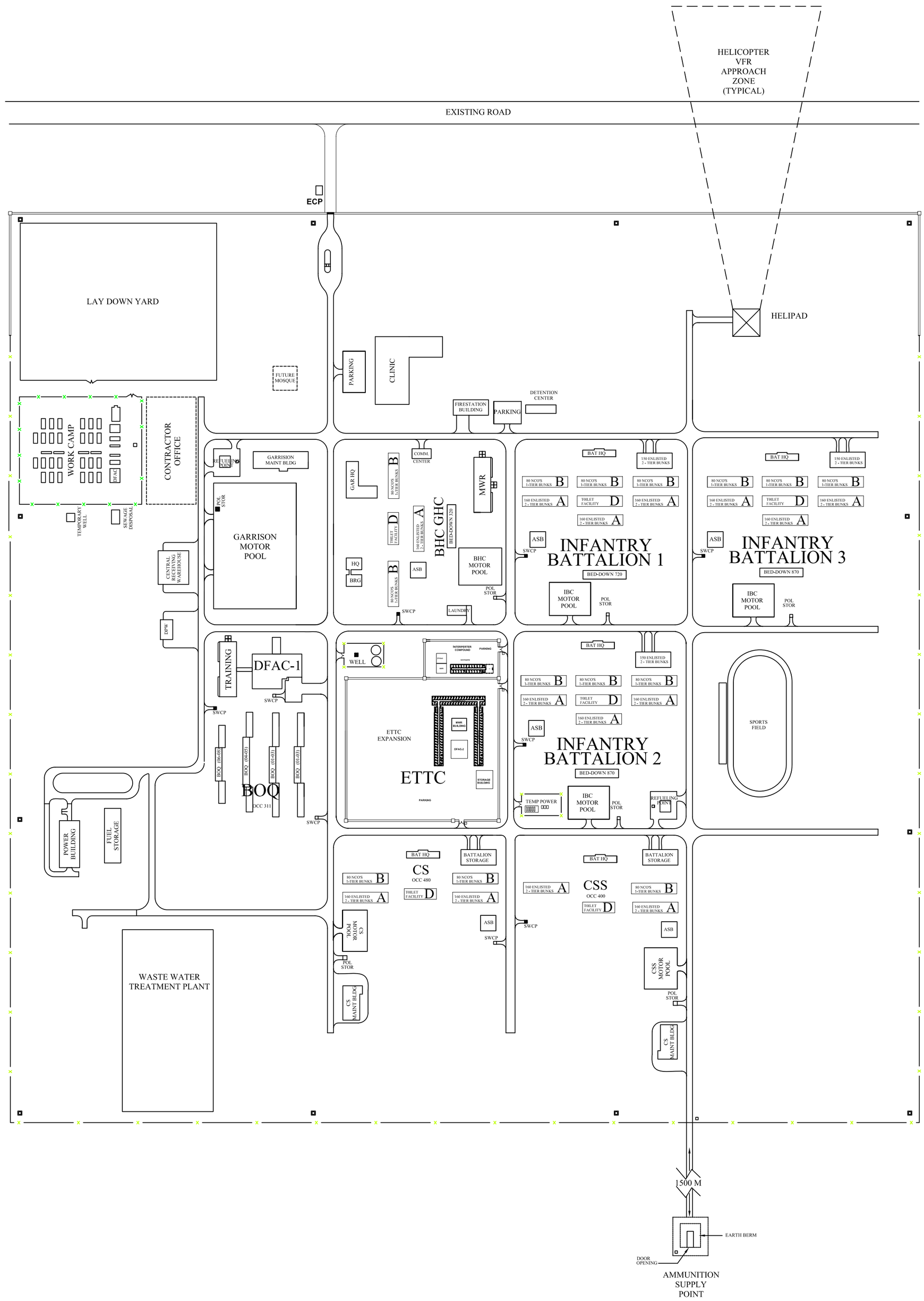

BRIGADE LAYOUT

SCALE 0 m 20 m 40 m 60 m 100 m

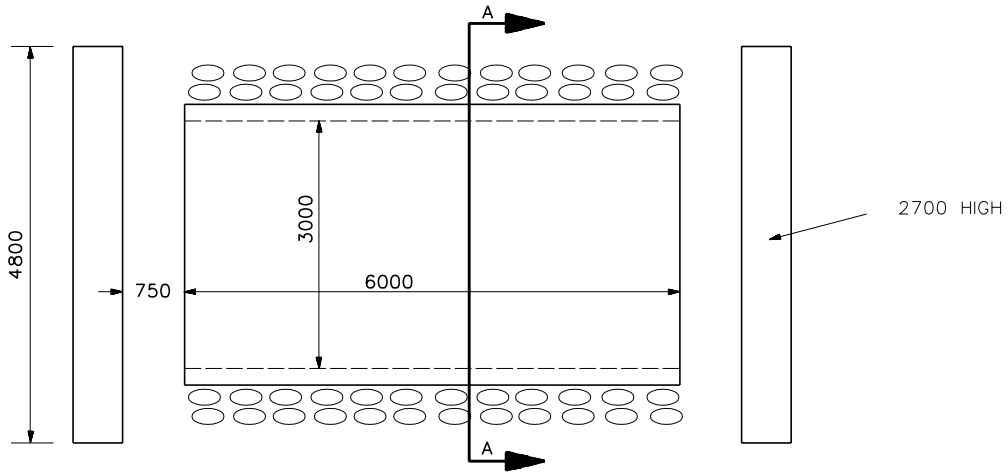

PLAN

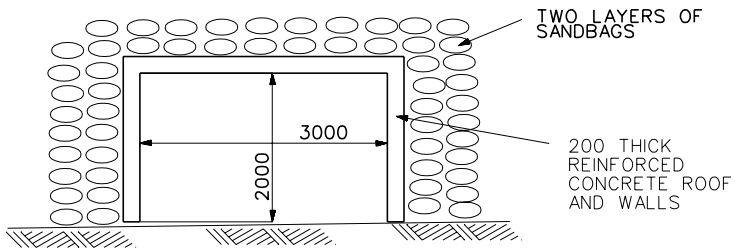

SECTION A-A

ALL DIMENSIONS ARE IN MILLIMETERS

ANA REGIONAL BRIGADE
AFGHANISTAN
TYPICAL BUNKER

SHEET C-6

NOTES:
1. SEE SECURITY FENCE DETAILS (SHEET C-2) FOR FENCE REQUIREMENTS.
2. MAXIMUM HORIZONTAL DISTANCE BETWEEN DEADMAN 60 METERS
3. WIRE ROPE TO BE CONTINUOUS BETWEEN DEADMAN.
4. ALL PIPE, CABLE AND ACCESSORIES TO BE GALVANIZED.

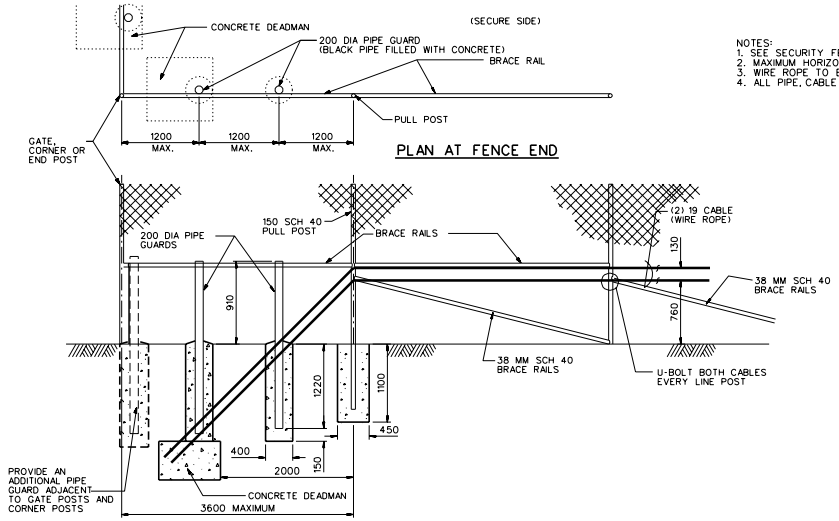

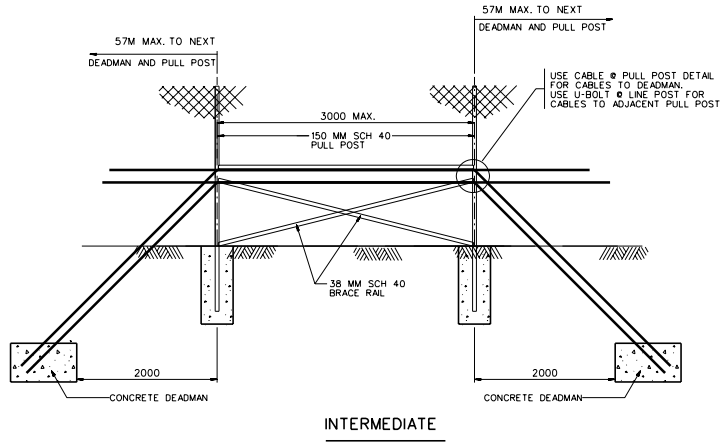

CABLE DETAIL WITH DEADMAN

NOT TO SCALE

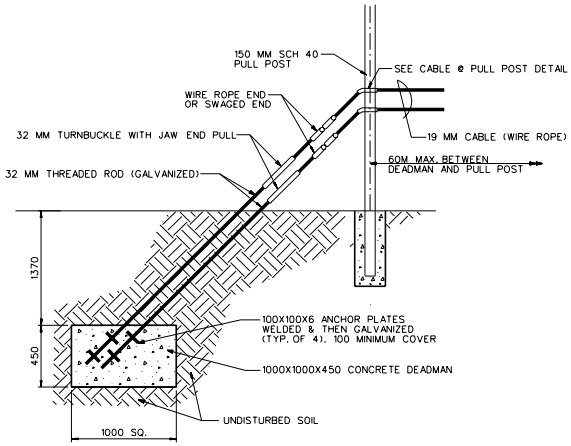

DEADMAN DETAIL

NOT TO SCALE

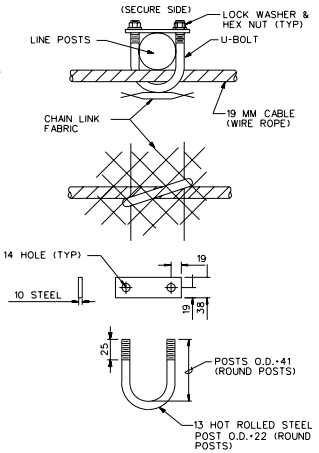

U-BOLT @ LINE POST DETAIL

NOT TO SCALE

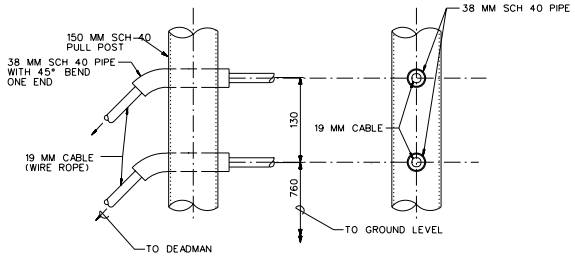

CABLE @ PULL POST DETAIL

NOT TO SCALE

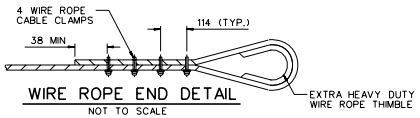

WIRE ROPE END DETAIL

NOT TO SCALE

NOTE: TORQUE TO BE APPLIED TO THE NUTS OF THE WIRE ROPE CLAMPS SHALL BE 18 M-KG (130 FT-LB)

ANA REGIONAL BRIGADE
AFGHANISTAN

FENCE DETAILS

SHEET C-3

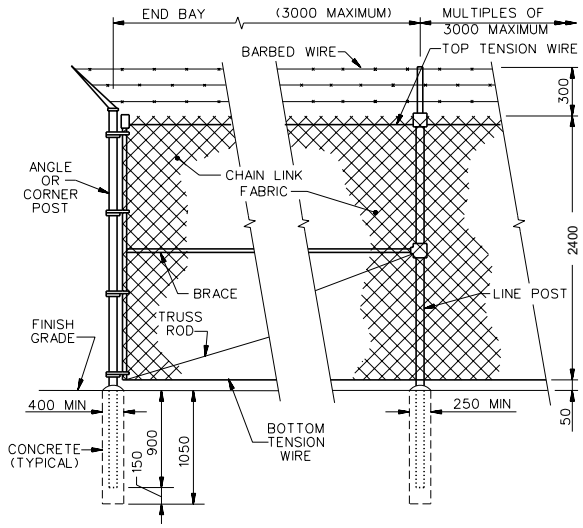

FENCE DETAILS

NOT TO SCALE

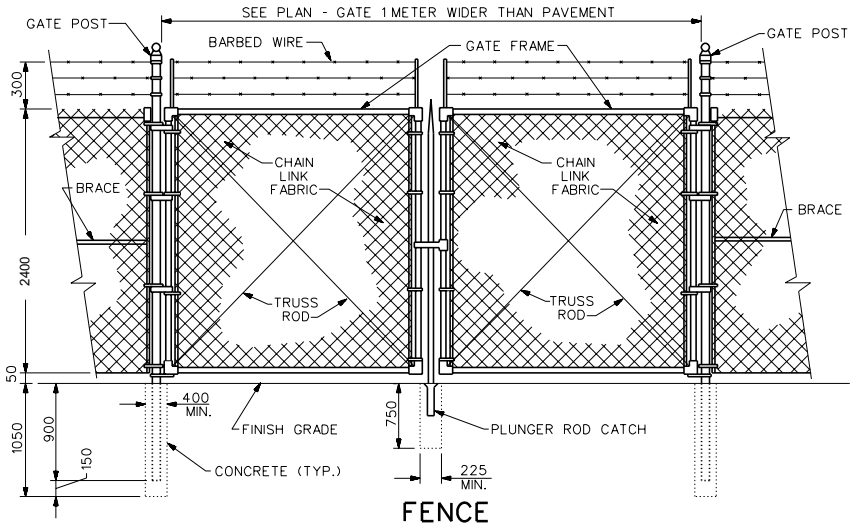

FENCE DOUBLE SWING GATE

NOT TO SCALE

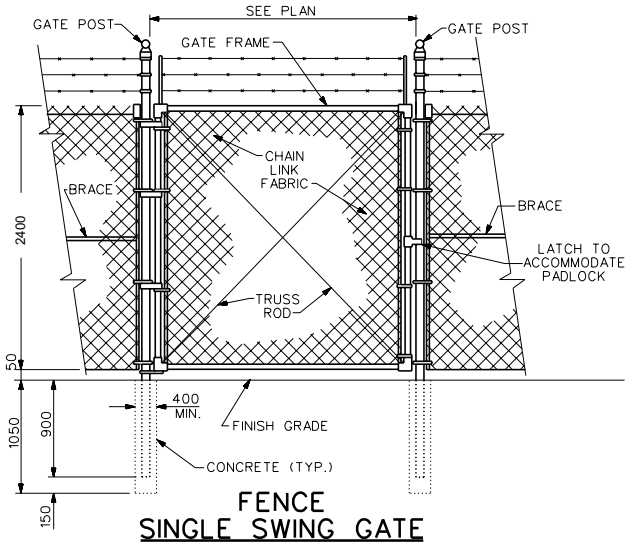

FENCE SINGLE SWING GATE

NOT TO SCALE

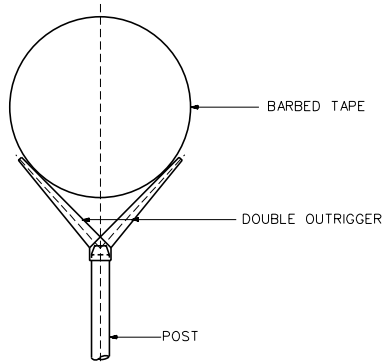

BARBED WIRE OUTRIGGER DETAIL

NOT TO SCALE

SEE SHEET C-3 FOR CABLE BARRIER DETAILS

ANA REGIONAL BRIGADE
AFGHANISTAN

FENCE DETAILS

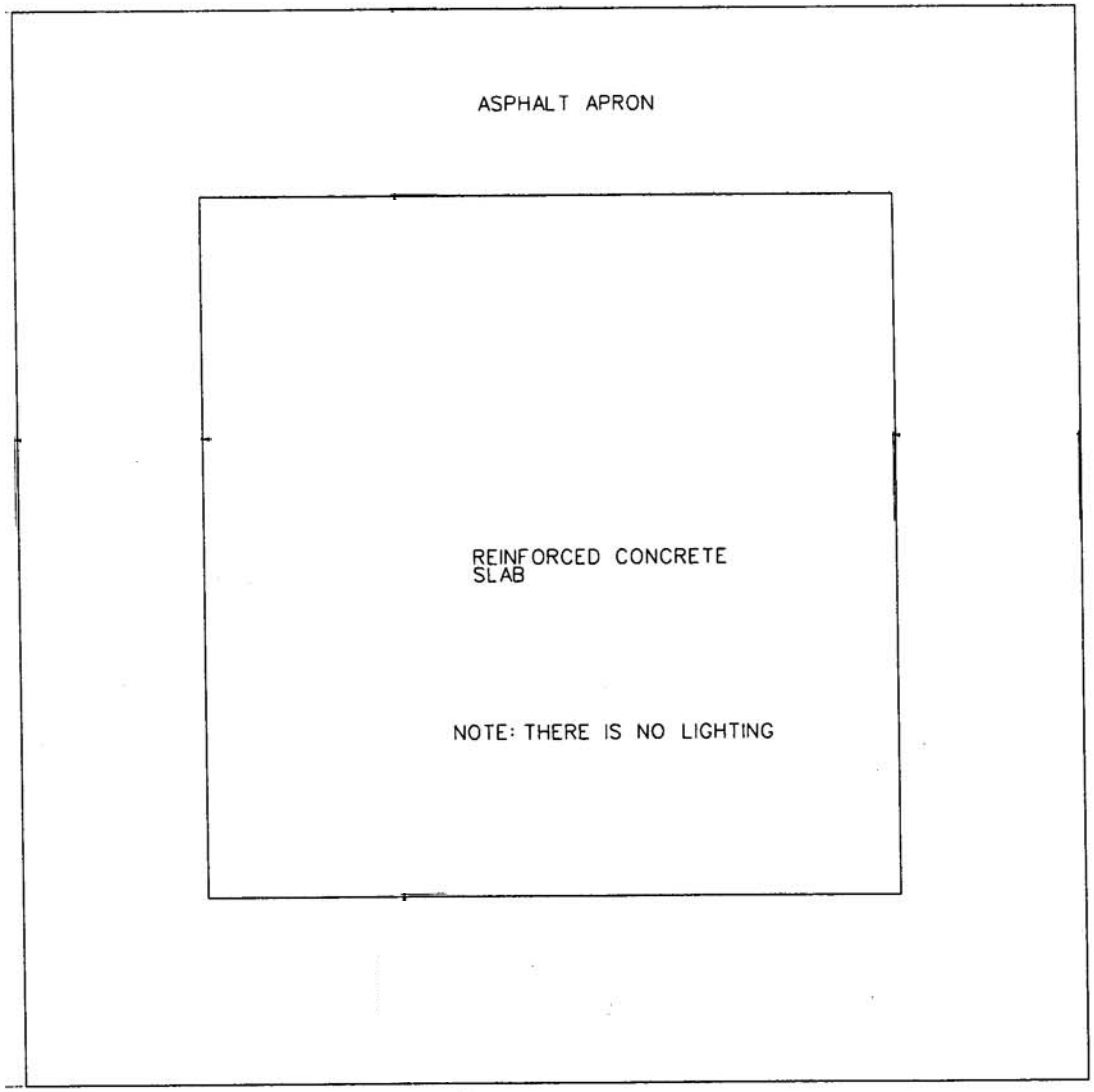

TYPICAL HELIPAD

ANA
REGIONAL BRIGADE
AFGHANISTAN

SHEET A-24

04/09/2004
h:\Projects\Afghanistan\ANA_typ_plans\helipad.dgn

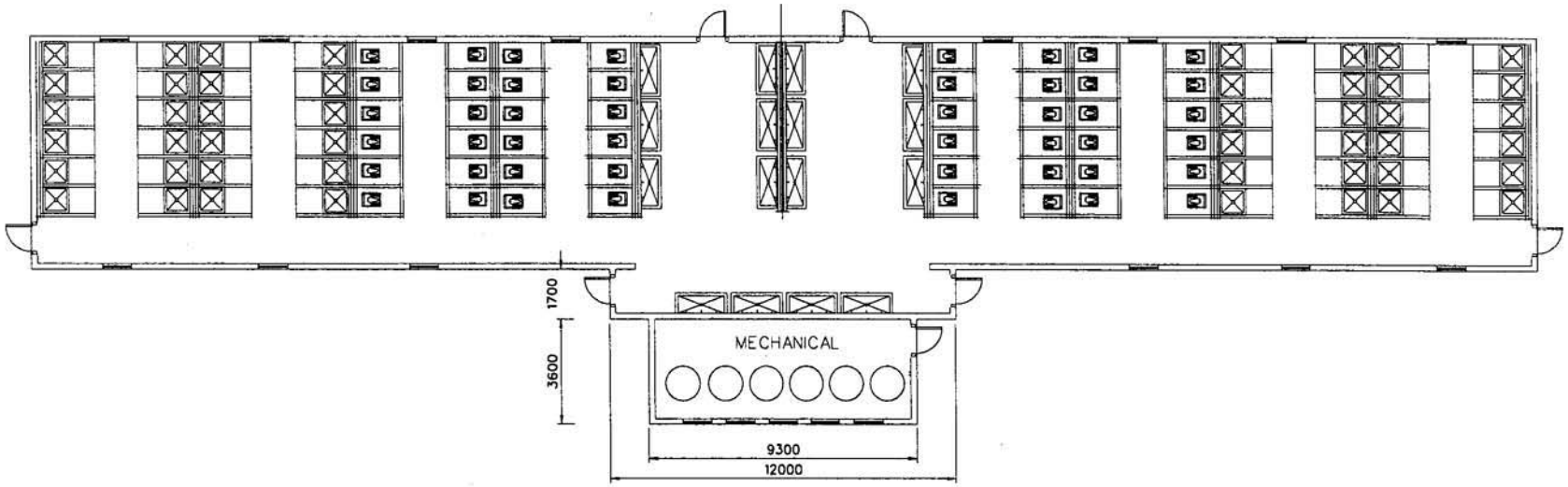

CENTRAL TOILET BUILDING

ANA
REGIONAL BRIGADE
AFGHANISTAN

SHEET A-12

04/09/2004
h:\Projects\Afghanistan\TOILET_BLDG.dgn

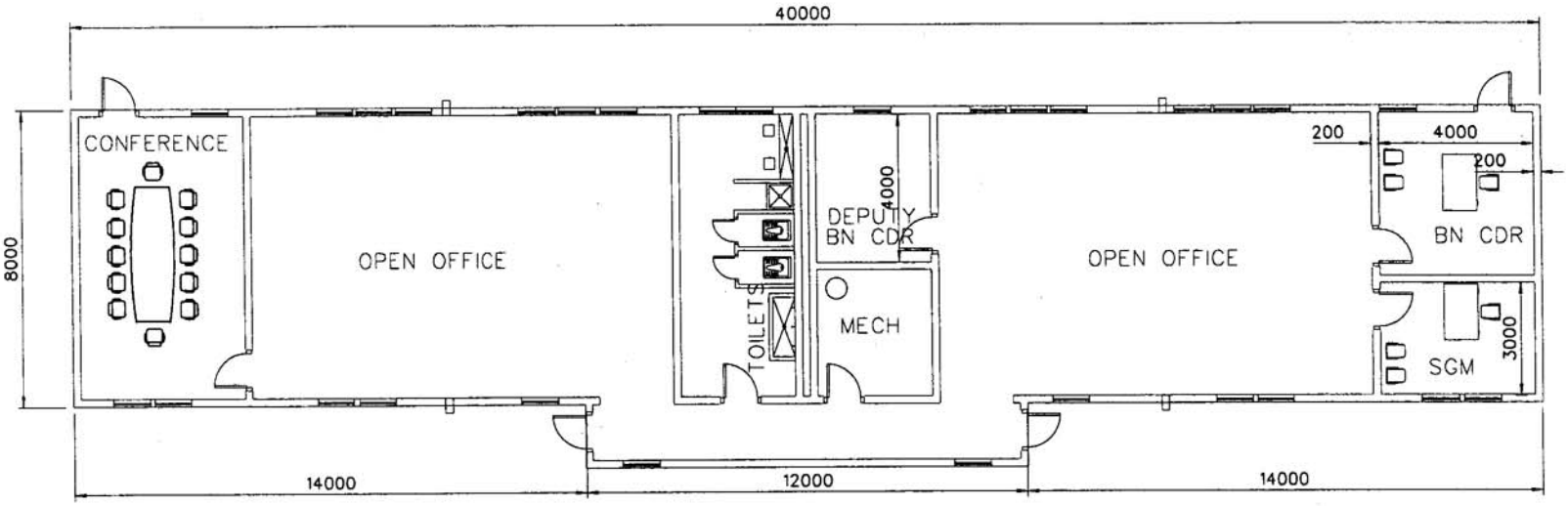

TYPICAL BATTALION
HEADQUARTERS

0 5 10

ANA
REGIONAL BRIGADE
AFGHANISTAN

SHEET A-11

04/09/2004
h:\Projects\Afghanistan\ANA_typ_plans\A_type.dgn

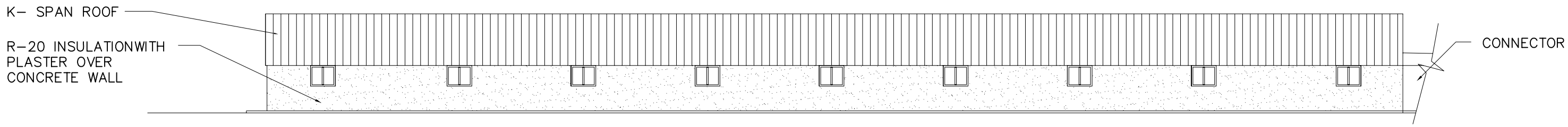

ETTC PARTIAL EXTERIOR ELEVATION

SCALE 0 m 2 m 6 m 10 m

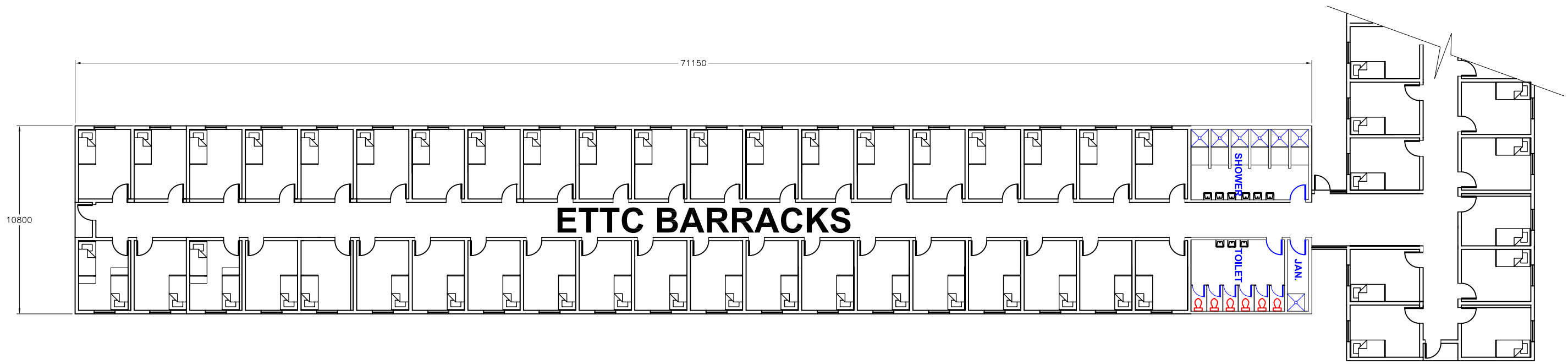

ETTC BARRACKS PARTIAL PLAN

SCALE 0 m 2 m 6 m 10 m

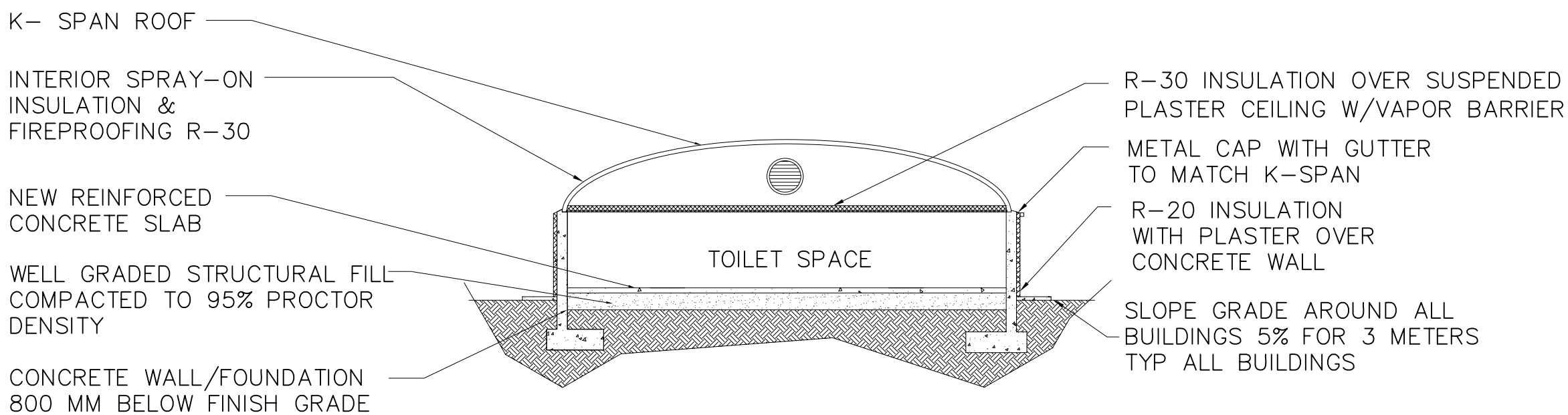

TOILET BUILDING SECTION

SCALE 0 m 2 m 6 m 10 m

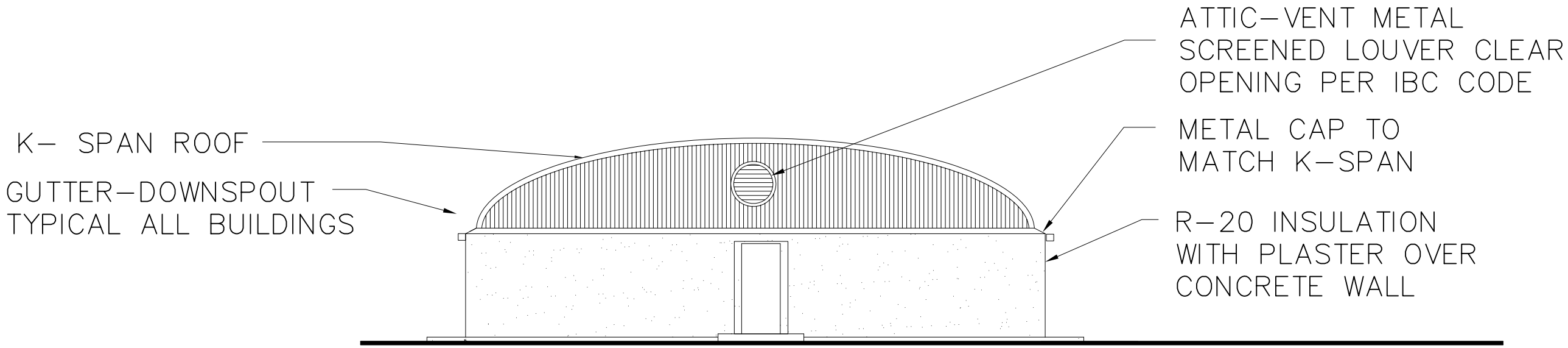

TOILET BUILDING END ELEVATION

SCALE 0 m 2 m 6 m 10 m

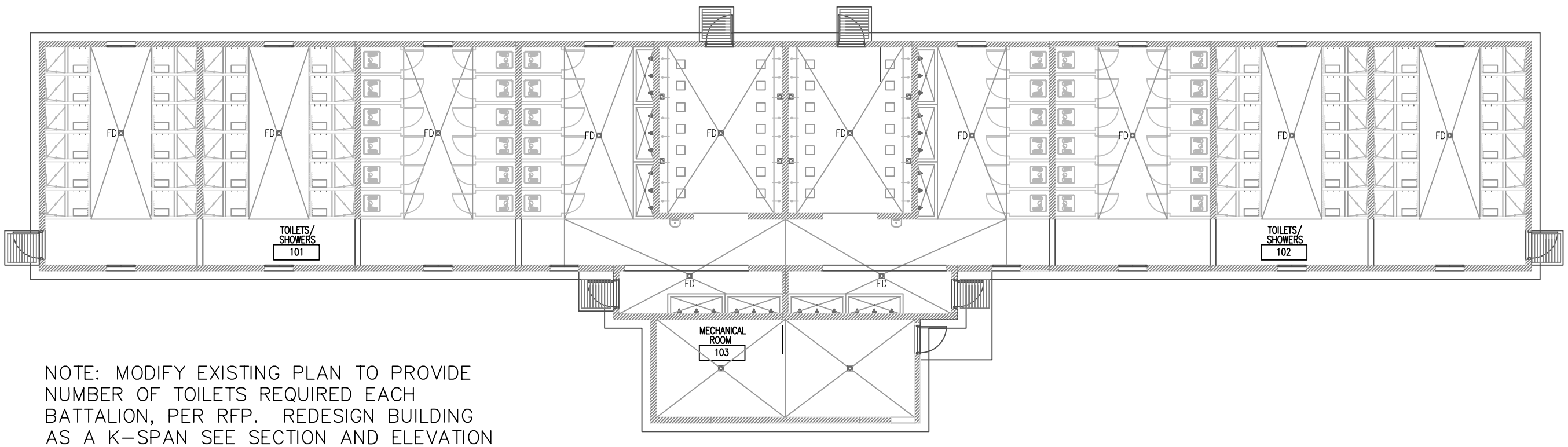

NOTE: MODIFY EXISTING PLAN TO PROVIDE NUMBER OF TOILETS REQUIRED EACH BATTALION, PER RFP. REDESIGN BUILDING AS A K-SPAN SEE SECTION AND ELEVATION

EXAMPLE TOILET PLAN

SCALE 0 m 2 m 6 m 10 m

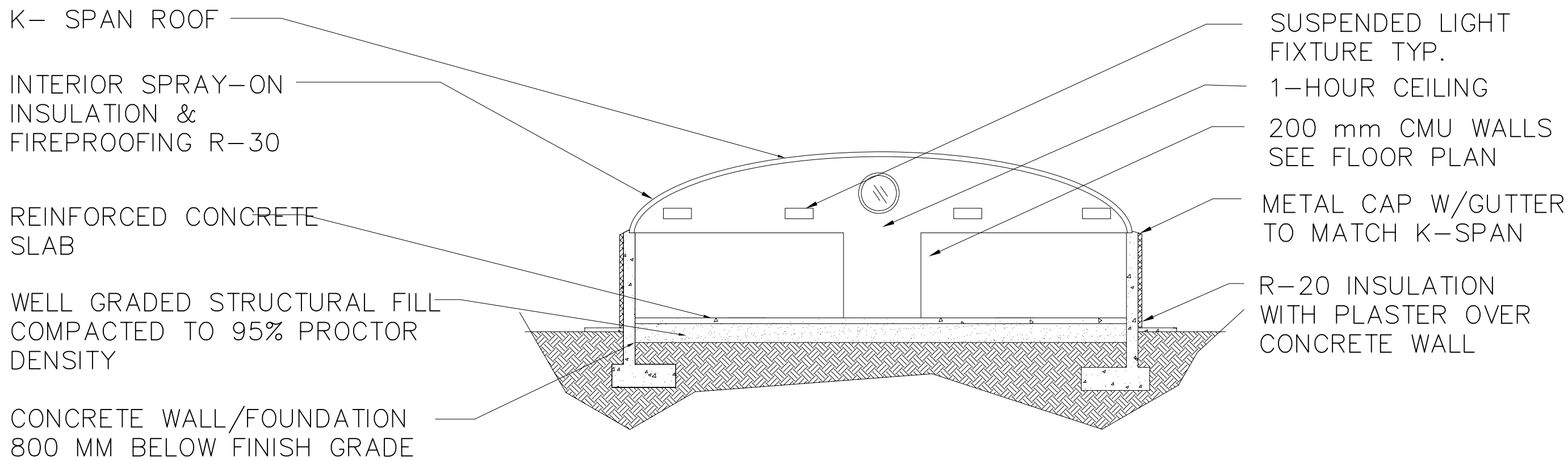

SECTION THRU BARRACKS B

SCALE 0 m 2 m 6 m 10 m

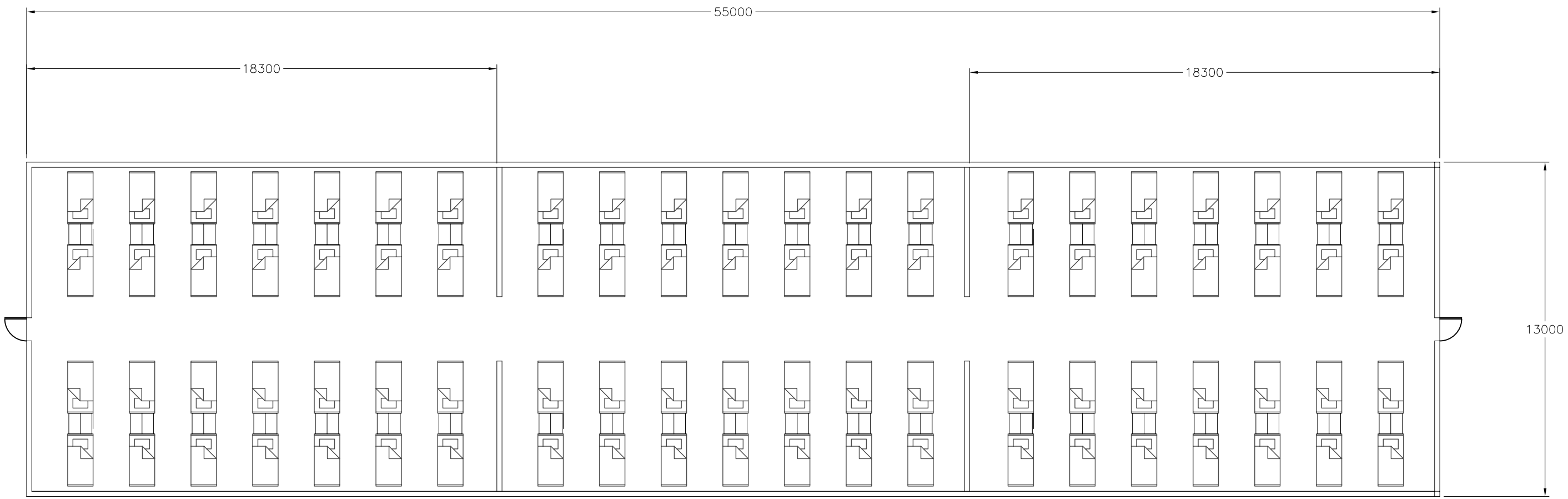

BARRACKS B 80 NCO 715 SQ. METER

SCALE 0 m 2 m 6 m 10 m

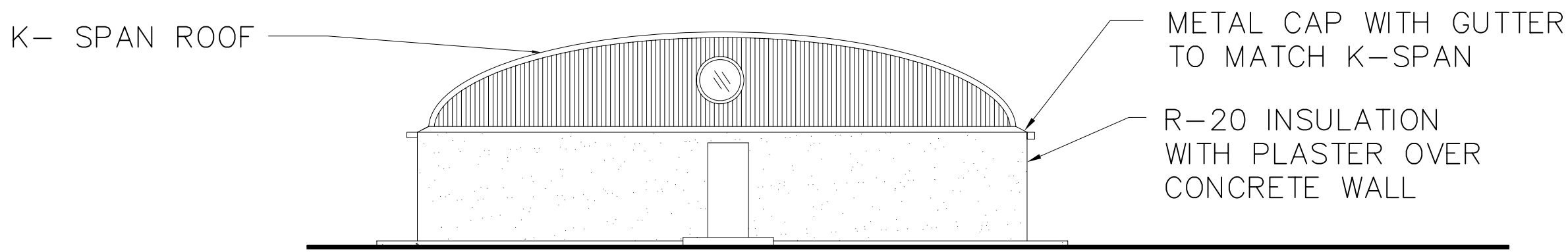

K-SPAN END ELEVATION

SCALE 0 m 2 m 6 m 10 m

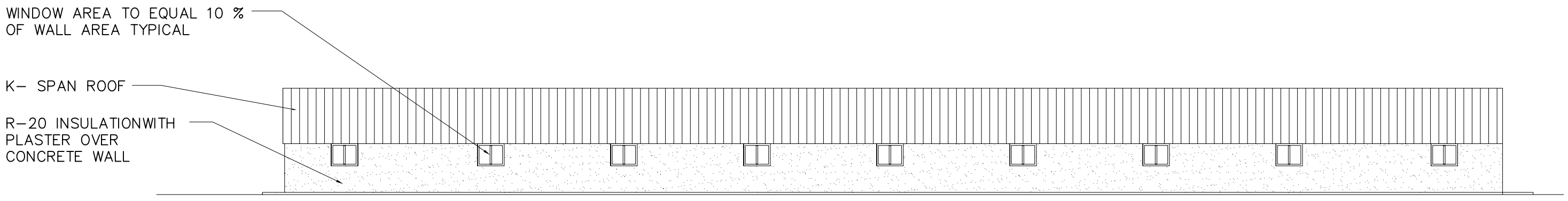

BARRACKS A TYPICAL EXTERIOR ELEVATION

SCALE 0 m 2 m 6 m 10 m

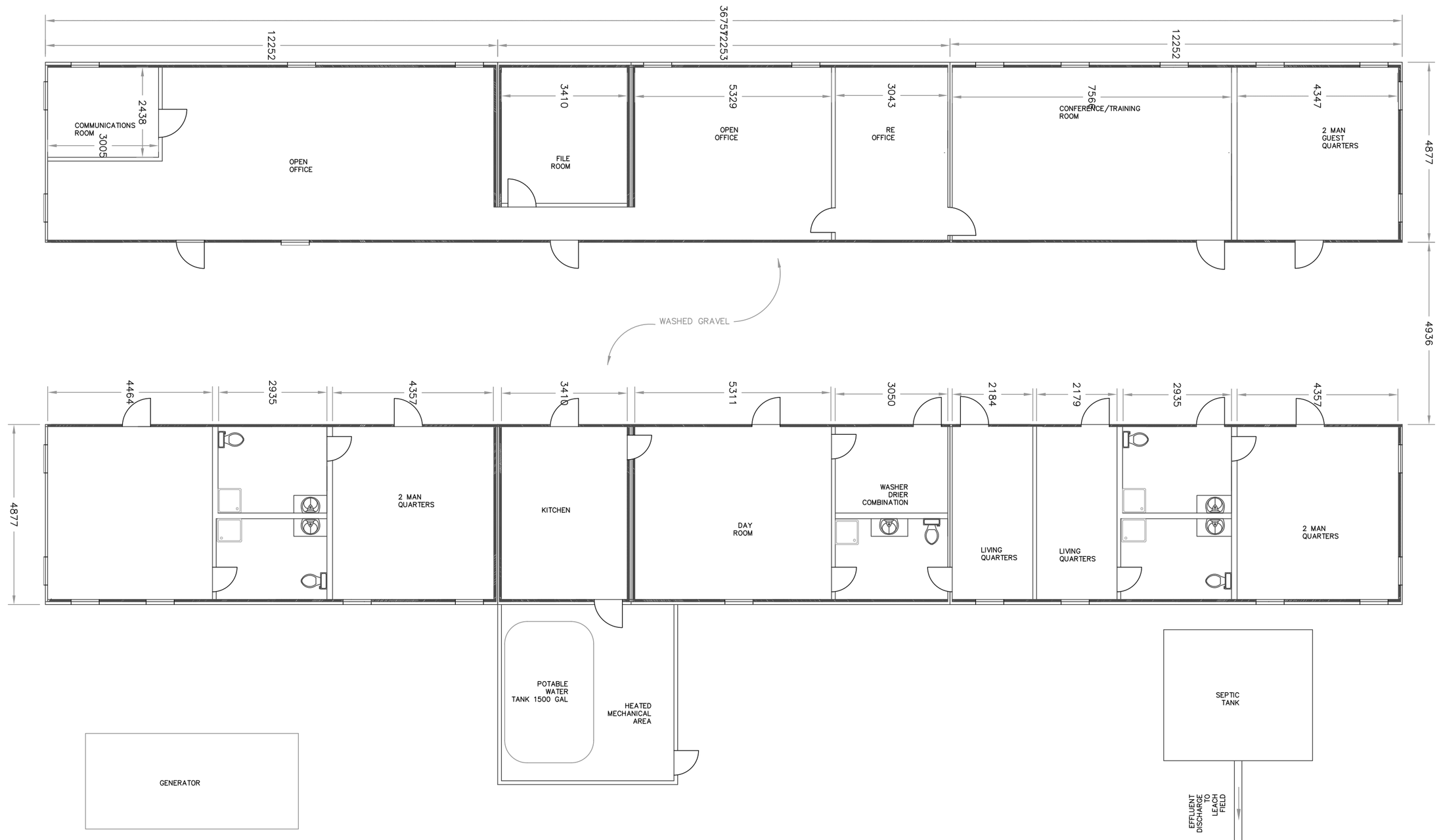

CONCEPTUAL PLAN

DIMENSIONS IN MM

NOTE:
1. CONCRETE FOOTINGS STRIPS EACH END OF CONEX (TYP.)
2. STRAP BOLT CONNECT CONEX TO EACH OTHER ALL FOUR CORNERS TOP AND BOTTOM.
3. THIS IS A CONCEPTUAL PLAN ONLY. THE CONTRACTOR IS RESPONSIBLE FOR ALL PLUMBING AND ELECTRICAL FIXTURES.
4. CONTRACTOR SHALL PROVIDE PHONE AND DATA COM BOX LOCATED ON EVERY WALL EXCEPT FOR BATHROOMS, KITCHENS, MECHANICAL, ELECTRICAL, LAUNDRY AND FILE ROOMS.
5. CONTRACTOR SHALL PROVIDE ADEQUATE VENERATION (SPLIT PACK UNITS) SUITABLY SIZED FOR ALL OCCUPIED ROOMS.
6. CONTRACTOR SHALL PROVIDE LIGHTING RECEPTACLES ON ALL WALLS EXCEPT MECHANICAL, ELECTRICAL ROOMS.
7. CONTRACTOR SHALL PROVIDE LIGHTING SWITCHES NEAR ALL DOOR OPENINGS.
8. CONTRACTOR SHALL PROVIDE GFCI RECTPTICALS IN ALL BATHROOMS, KITCHEN AND LAUNDRY ROOM.

Paktika ANA Garrison

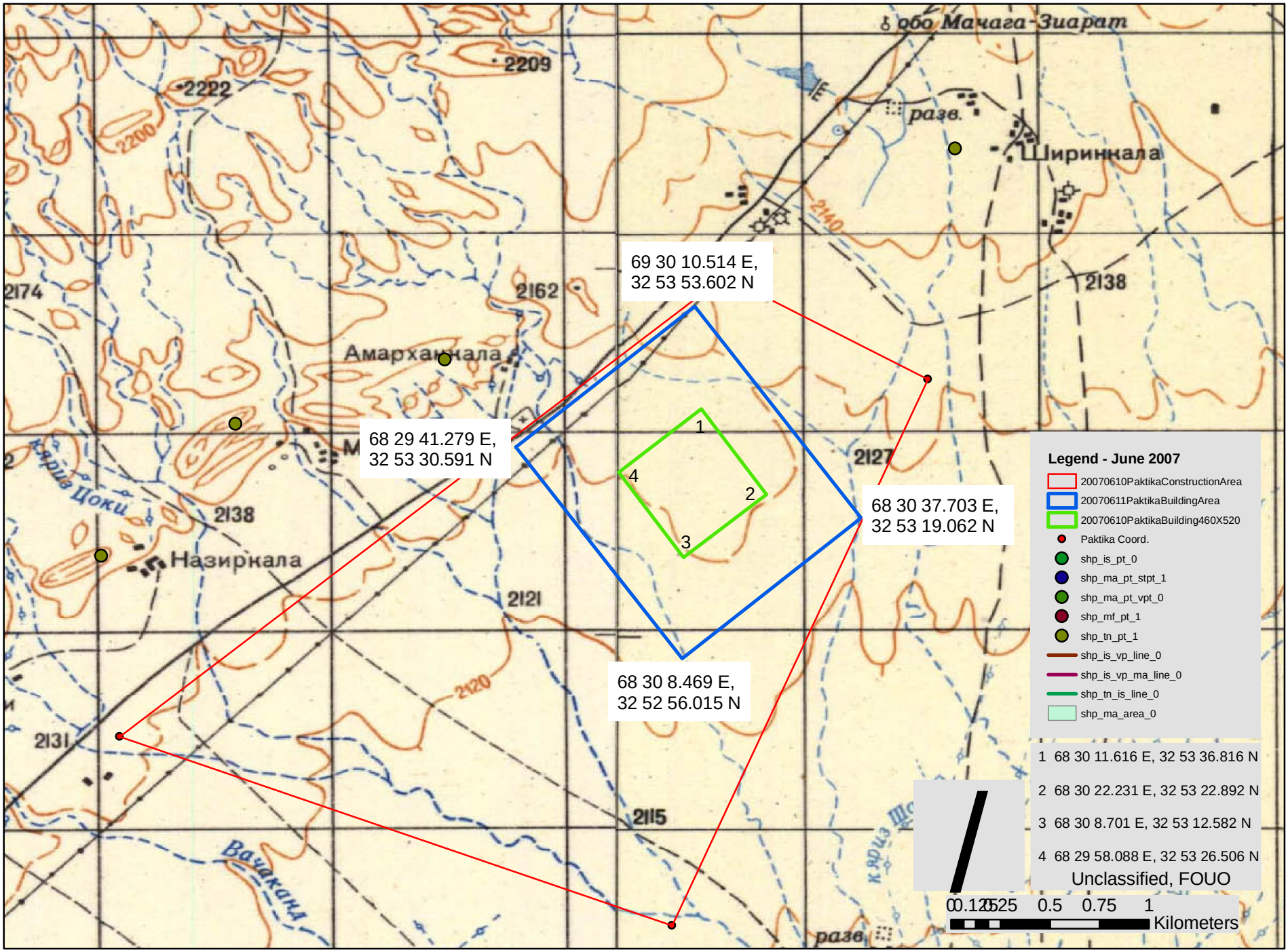

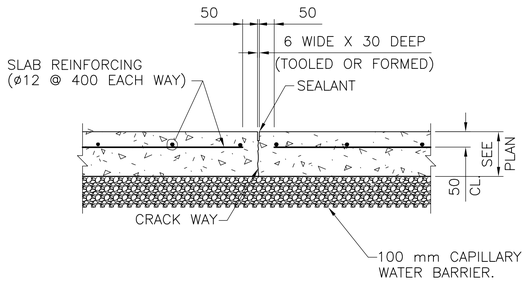

1 SLAB ON GRADE OR PAVEMENT CONTROL JOINT

A-SS-03 REF. SCALE: 1:10

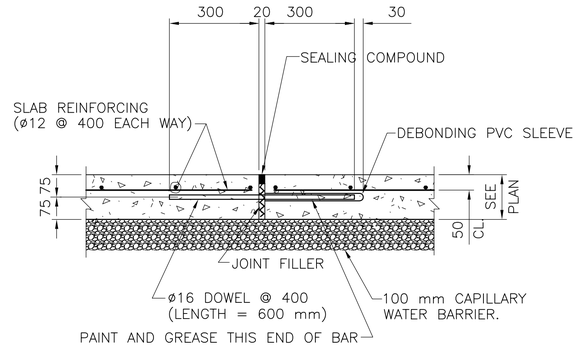

2 PAVEMENT EXPANSION JOINT

A-SS-03 REF. SCALE: 1:10

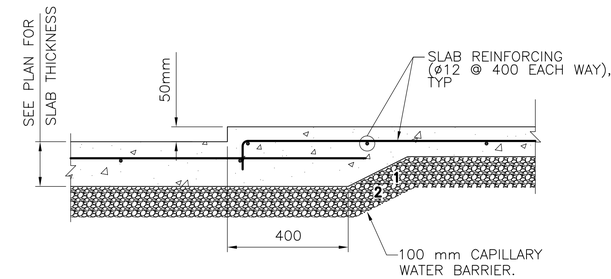

3 DEPRESSED SLAB DETAIL

A-SS-03 REF. SCALE: 1:10

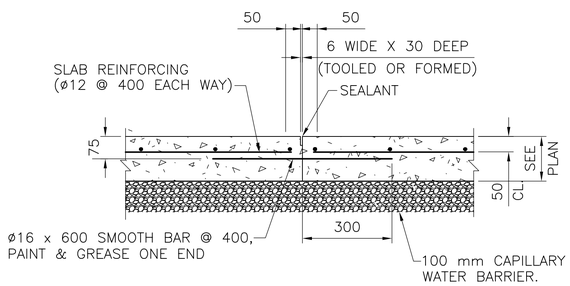

4 SLAB ON GRADE OR PAVEMENT CONSTRUCTION JOINT

A-SS-03 REF. SCALE: 1:10

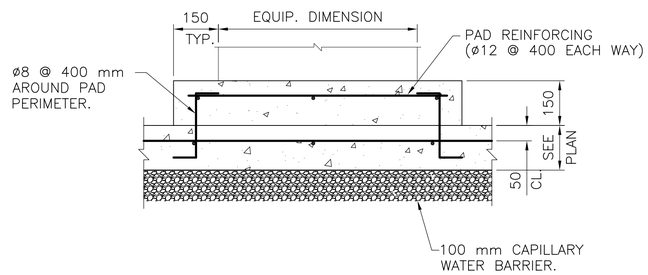

5 INTERIOR EQUIPMENT PAD DETAIL

A-SS-03 REF. SCALE: 1:10

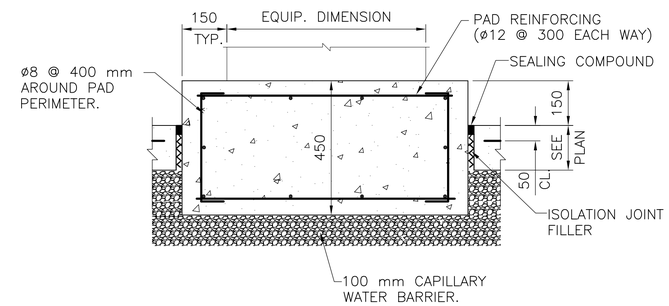

6 LARGE EQUIPMENT ISOLATION PAD DETAIL

A-SS-03 REF. SCALE: 1:10

200 0 200mm
SCALE: 1 = 10

UNLESS OTHERWISE NOTED, LINEAR DIMENSIONS SHOWN ARE IN MILLIMETERS.

SYMBOL	DESCRIPTION	DATE	APP.

Designed By: D. SMITH
Drawn By: D. SMITH
Checked By: M. THOMPSON
Date: 10 MAY 2007
File No. AF0707
I.S.O. Sheet File Name: AF0707A-SS03DT.DWG
Solicitation Number: –

US Army Corps of Engineers Transatlantic Programs Center

ANA REGIONAL BRIGADE
PAKTIKA, AFGHANISTAN
DPW BUILDING

TYPICAL SLAB ON GRADE DETAILS

SHEET REFERENCE NUMBER:
A-SS-03

$DATE$
$FILE$

D SIZE BORDER
32 X 20.5

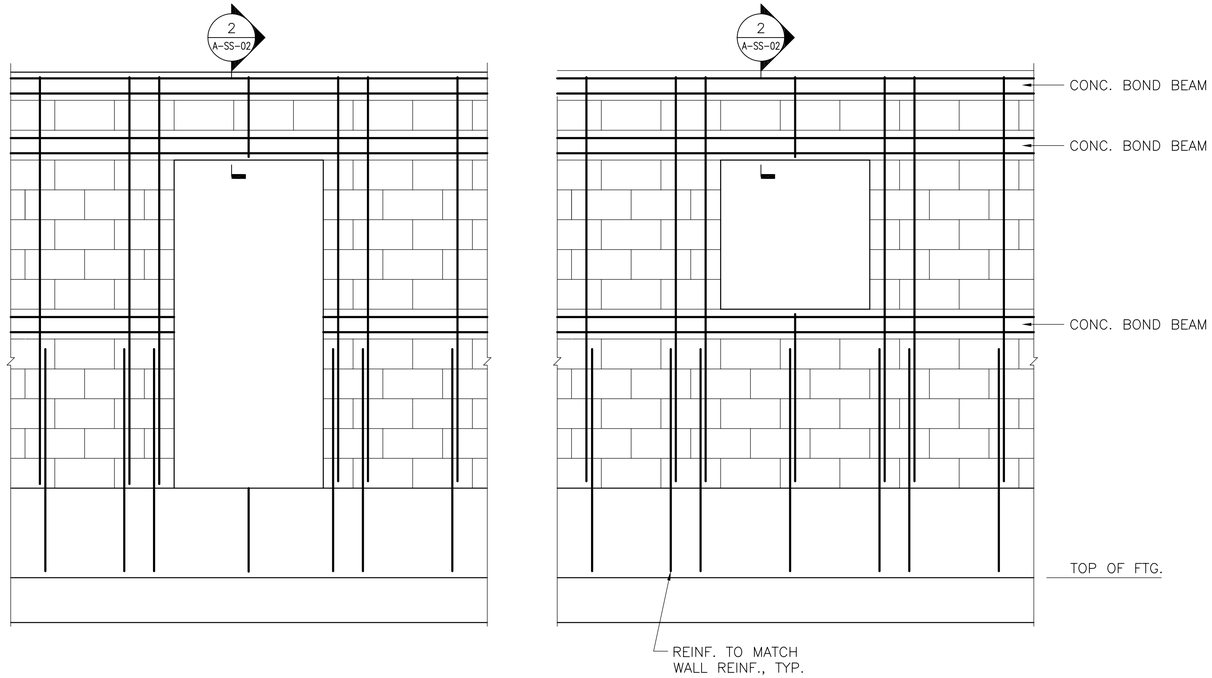

1 | CMU WALL PARTIAL ELEVATION

A-SS-02 | REF. | SCALE: 1:20

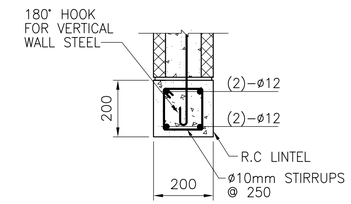

2 | LINTEL SECTION

A-SS-02 | REF. | SCALE: 1:10

UNLESS OTHERWISE NOTED, LINEAR DIMENSIONS SHOWN ARE IN MILLIMETERS.

SYMBOL	DESCRIPTION	DATE	APP.

Designed By:
Drawn By:
Checked By:
Date: 10 MAY 2007
File No. AF0707
I.S.O. Sheet File Name: AF0707A-SS02DT.DWG
Solicitation Number: –

US Army Corps of Engineers Transatlantic Programs Center

ANA REGIONAL BRIGADE
PAKTIKA, AFGHANISTAN
DPW BUILDING

TYPICAL MASONRY DETAILS

SHEET REFERENCE NUMBER:
A-SS-02

$DATE$
$FILE$

D SIZE BORDER
32 X 20.5

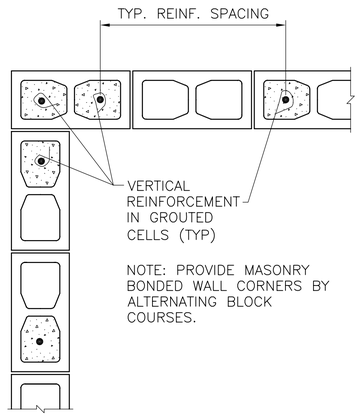

1 TYPICAL CMU CORNER WALL REINFORCING DETAIL

A-SS-01 | REF. | SCALE: 1:10

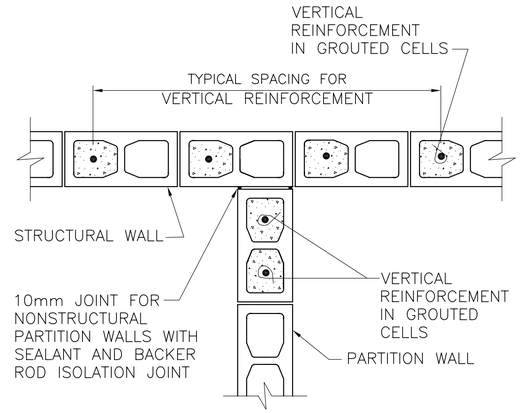

2 TYPICAL CMU PARTITION WALL REINFORCING DETAIL

A-SS-01 | REF. | SCALE: 1:10

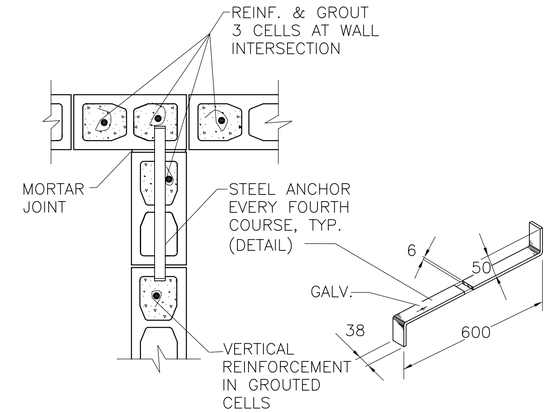

3 TYPICAL CMU STRUCTURAL WALL REINFORCING DETAIL

A-SS-01 | REF. | SCALE: 1:10

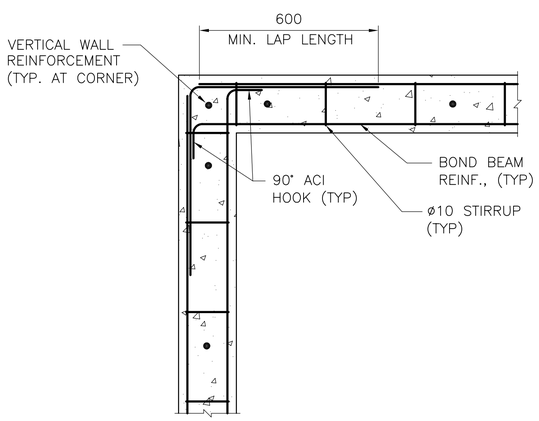

4 TYPICAL CIP CONCRETE BOND BEAM REINFORCING DETAIL

A-SS-01 | REF. | SCALE: 1:10

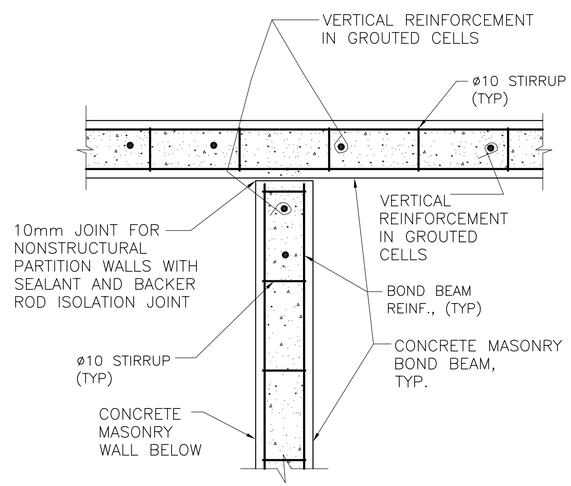

5 TYPICAL CIP CONCRETE BOND BEAM REINFORCING DETAIL

A-SS-01 | REF. | SCALE: 1:10

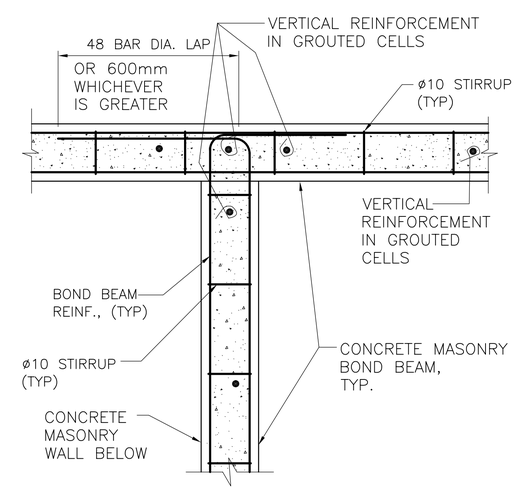

6 TYPICAL CIP CONCRETE BOND BEAM REINFORCING DETAIL

A-SS-01 | REF. | SCALE: 1:10

UNLESS OTHERWISE NOTED, LINEAR DIMENSIONS SHOWN ARE IN MILLIMETERS.

SYMBOL	DESCRIPTION	DATE	APP.

Designed By:
Drawn By:
Checked By:
Date: 10 MAY 2007
File No. AF0707
I.S.O. Sheet File Name: AF0707A-SS01DT.DWG
Solicitation Number: –

US Army Corps of Engineers Transatlantic Programs Center

ANA REGIONAL BRIGADE
PAKTIKA, AFGHANISTAN
DPW BUILDING
TYPICAL MASONRY DETAILS
–

SHEET REFERENCE NUMBER:
A-SS-01

$DATE$
$FILE$

D SIZE BORDER
32 X 20.5

GENERAL:

1. CONTRACTOR SHALL VERIFY ALL DIMENSIONS AND CONDITIONS AFFECTING THE WORK AT JOBSITE.

2. ALL STRUCTURAL WORK AND MATERIALS SHALL CONFORM TO THE REQUIREMENTS OF THE PROJECT SPECIFICATIONS.

3. FOR LOCATION AND DIMENSIONS OF GROOVES, REGLETS, SLEEVES, OPENINGS, AND EMBEDDED OR ATTACHED ITEMS, REFER TO ARCHITECTURAL, MECHANICAL, ELECTRICAL, AND PIPING DRAWINGS.

CODES:

1. ALL PARTS SHALL BE FURNISHED AND ERECTED ACCORDING TO THE APPLICABLE CODES AND SPECIFICATIONS OF THE FOLLOWING:

AMERICAN CONCRETE INSTITUTE	(ACI)
AMERICAN INSTITUTE OF STEEL CONSTRUCTION	(AISC)
AMERICAN IRON AND STEEL INSTITUTE	(AISI)
AMERICAN WELDING SOCIETY	(AWS)
MINIMUM DESIGN LOADS FOR BUILDINGS AND OTHER STRUCTURES	(ASCE)
INTERNATIONAL BUILDING CODE	(IBC)

DESIGN LOADS:

1. ROOF LOADING

A. LIVE LOAD 100 KG/SQ METER (20 PSF)
B. SNOW LOAD 75 KG/SQ METER (15 PSF)
C. COLLATERAL LOAD 50 KG/SQ METER (10 PSF)

2. WIND LOADING

A. BASIC WIND SPEED 145 KM/HR (90 MPH)
B. EXPOSURE CATEGORY "B"
C. IMPORTANCE FACTOR, Iw = 1.00
D. BUILDING CATEGORY "II"
E. MAX. FRAME DRIFT DUE TO 10-YEAR WIND = H/200

3. SEISMIC LOADING:

A. Ss = 1.28g
B. S1 = 0.51g
C. SEISMIC USE GROUP "I"
D. SITE CLASSIFICATION "D"
E. IMPORTANCE FACTOR I = 1.0

BASIC SEISMIC FORCE RESISTING SYSTEM:

CANTILEVER CMU WALL SYSTEM WITH INTERMEDIATE STEEL MOMENT FRAMES

DESIGN BASE SHEAR: 0.34W FOR CMU CANTILEVER WALLS.
0.19W FOR INTERMEDIATE STEEL MOMENT FRAMES.

ANALYSIS PROCEDURE: EQUIVALENT LATERAL FORCE METHOD

FOUNDATIONS:

1. ALL FOOTINGS SHALL BEAR ON SOIL CAPABLE OF SUSTAINING THE LOADS.

2. CONTINUOUS WALL FOOTINGS WERE DESIGNED FOR A SOIL BEARING CAPACITY OF 9765 KG/SQ. METER (2000 PSF). ISOLATED COLUMN FOOTINGS WERE DESIGNED FOR A MAXIMUM BEARING CAPACITY OF 9765 KG/SQ. METER (2000 PSF).

3. ELEVATIONS SHOWN ON PLANS FOR TOP OF FOOTINGS ARE MINIMUM DEPTH. DIFFERENT OR UNUSUAL CONDITIONS SHALL BE REPORTED TO THE CONTRACTING OFFICER.

4. ALL FOOTING REINFORCEMENT SHALL BE SECURELY SUPPORTED ABOVE GROUND. CONCRETE BLOCK AND BROKEN TILE SHALL NOT BE USED. CONCRETE OR CLAY BRICK MAY BE USED.

CONCRETE:

1. STRUCTURAL CONCRETE FOR THE BUILDING STRUCTURE SHALL HAVE THE FOLLOWING PROPERTIES:

FOOTINGS: f'c = 210 KG/SQ. CM (3,000 PSI) AT 28 DAYS
SLABS: f'c = 210 KG/SQ. CM (3,000 PSI) AT 28 DAYS

2. ALL REINFORCING STEEL SHALL BE DEFORMED BARS CONFORMING TO ASTM A615 GRADE 60 UNLESS NOTED OTHERWISE.

3. LOCATION OF ALL CONCRETE JOINTS, OTHER THAN THOSE SPECIFIED, SHALL BE APPROVED BY THE CONTRACTING OFFICER BEFORE CONCRETE PLACEMENT.

4. MINIMUM PROTECTIVE COVER OF REINFORCEMENT (SEE DETAILS) SHALL BE AS FOLLOWS:

FOOTINGS, 75mm CLEAR BOTTOM AND SIDES, 40mm CLEAR TOP.
CONCRETE SLABS-ON-GRADE, 25mm CLEAR TOP.
WALLS, 40mm CLEAR SIDES.
CONCRETE PIERS, 40mm CLEAR TO TIES.

5. MINIMUM CONCRETE SPLICES AND HOOKS FOR REINFORCING STEEL SHALL CONFORM TO ACI 318, CURRENT EDITION.

6. CONCRETE WORK SHALL BE COORDINATED WITH DRAINS, UNDERGROUND UTILITIES, MECHANICAL, ELECTRICAL, AND ARCHITECTURAL PLANS. CONCRETE SHALL NOT BE CAST UNTIL THESE ITEMS HAVE BEEN INSTALLED AND ACCEPTED.

7. CONCRETE FINISHES SHALL BE PROVIDED AS DESCRIBED IN THE SPECIFICATIONS.

8. CORNER BARS SHALL BE PROVIDED AT ALL INTERSECTIONS; BAR SIZE AND SPACING TO MATCH LARGER BAR.

9. SLABS ON GRADE SHALL BE REINFORCED AT ALL PENETRATIONS AND RE-ENTRANT CORNERS. PLACE 3-ø10 x 1.0 METER AROUND FLOOR DRAINS. PLACE 2-ø12 x 1.0 METER (MINIMUM) AT RE-ENTRANT CORNERS.

STRUCTURAL STEEL:

1. STRUCTURAL STEEL SHALL BE FABRICATED AND ERECTED IN ACCORDANCE WITH THE AMERICAN INSTITUTE OF STEEL CONSTRUCTION, "SPECIFICATION FOR STRUCTURAL STEEL BUILDINGS", 1989 (AISC ASD MANUAL, 9TH EDITION).

2. STEEL SHALL CONFORM TO THE FOLLOWING REQUIREMENTS UNLESS NOTED OTHERWISE:

MISCELLANEOUS PLATES AND ANGLES - ASTM A36 (Fy = 36 KSI)
RECTANGULAR HSS - ASTM A500, GRADE B (Fy = 46 KSI)
"W" SHAPES - ASTM A992

3. NO STRUCTURAL STEEL SHALL BE FABRICATED OR ERECTED UNTIL SHOP DRAWINGS HAVE BEEN APPROVED.

4. NO HOLES OTHER THAN THOSE SPECIFICALLY DETAILED SHALL BE ALLOWED THROUGH STRUCTURAL STEEL MEMBERS. CUTTING OF STEEL SHALL NOT BE PERMITTED WITHOUT APPROVAL OF THE CONTRACTING OFFICER.

5. THE CONTRACTOR SHALL VERIFY ALL SHOP DRAWING DIMENSIONS WITH THE STRUCTURAL AND ARCHITECTURAL PLANS AND DETAILS, AND WITH FIELD DIMENSIONS OF COLUMN LAYOUT.

7. BOLTED CONNECTIONS SHALL BE MADE WITH HIGH STRENGTH BOLTS CONFORMING TO ASTM A325, 20mm DIAMETER MINIMUM UNLESS NOTED OTHERWISE.

8. CONNECTIONS NOT SHOWN ON DRAWINGS SHALL BE DESIGNED BY THE FABRICATOR. CONNECTIONS SHALL BE SELECTED TO SUPPORT ONE HALF THE TOTAL UNIFORM LOAD CAPACITY SHOWN IN THE ALLOWABLE LOAD TABLES, PART 2 OF LATEST AISC MANUAL FOR THE GIVEN BEAM, SPAN, AND GRADE OF STEEL SPECIFIED. WHERE POSSIBLE, DOUBLE ANGLE CONNECTIONS SHALL BE USED.

MASONRY:

1. ENGINEERED MASONRY IS DESIGNED IN ACCORDANCE WITH "BUILDING CODE REQUIREMENTS FOR MASONRY STRUCTURES" (ACI 530-99/ ASCE 5-99/TMS 402-99).

2. UNITS: ASTM C90, TYPE (I) (NORMAL WEIGHT, MOISTURE CONTROLLED) (OR EQUIVALENT DIN, ACI OR EN STANDARDS) MORTAR: ASTM C270 TYPE S (OR EQUIVALENT DIN, ACI OR EN STANDARDS)

3. FULLY GROUT ALL CELLS CONTAINING REINFORCING STEEL OR ANCHORS UNLESS NOTRED OTHERWISE.

4. USE 50 db FULL CONTACT LAP SPLICES FOR REINFORCING STEEL IN CMU WALLS UNLESS NOTED OTHERWISE.

5. SEE SPECIFICATION 04200 FOR MASONRY BLOCK. ALL VERTICAL CELLS OF MASONRY BLOCK WITH REINFORCING SHALL BE GROUTED SOLID TO FORM A COMPOSITE MASONRY AND STEEL ASSEMBLY.

6. PROVIDE AN ADDITIONAL VERTICAL REINFORCEMENT AT EACH SIDE OF INTERSECTION OF EXTERIOR WALLS, AND AT EACH SIDE OF ALL MASONRY OPENINGS GREATER THAN 250mm IN WIDTH. IN OPENINGS WIDER THAN 600mm, PROVIDE ADDITIONAL VERTICAL REINFORCEMENT IN TWO ADJACENT CELLS ON EACH SIDE OF THE OPENING. ADDED VERTICAL REINFORCEMENT SHALL BE CONTINUOUS FOR THE FULL HEIGHT OF WALL.

7. PROVIDE BOND BEAMS AT 1200mm MAXIMUM VERTICAL SPACING (EXCEPT AT RESTROOM AND SHOWER STALL PARTITION WALLS).

8. PROVIDE LINTEL ABOVE ALL MASONRY OPENINGS AS SHOWN IN DETAIL 3/SS-02.

9. PROVIDE A BOND BEAM BELOW ALL MASONRY OPENINGS AND EXTEND A MINIMUM OF 400mm BEYOND EACH SIDE OF OPENING.

UNLESS OTHERWISE NOTED, LINEAR DIMENSIONS SHOWN ARE IN MILLIMETERS.

SYMBOL	DESCRIPTION	DATE	APP.

Designed By:
Date: 10 MAY 2007
Drawn By:
File No. AF0707
Checked By:
I.S.O. Sheet File Name: AF0707A-SS00DT.DWG
Solicitation Number: -

US Army Corps of Engineers
Transatlantic Programs Center

ANA REGIONAL BRIGADE
PAKTIKA, AFGHANISTAN
DPW BUILDING

GENERAL NOTES

SHEET REFERENCE NUMBER:
A-SS-00

$DATE$
$FILE$

D SIZE BORDER
32 X 20.5

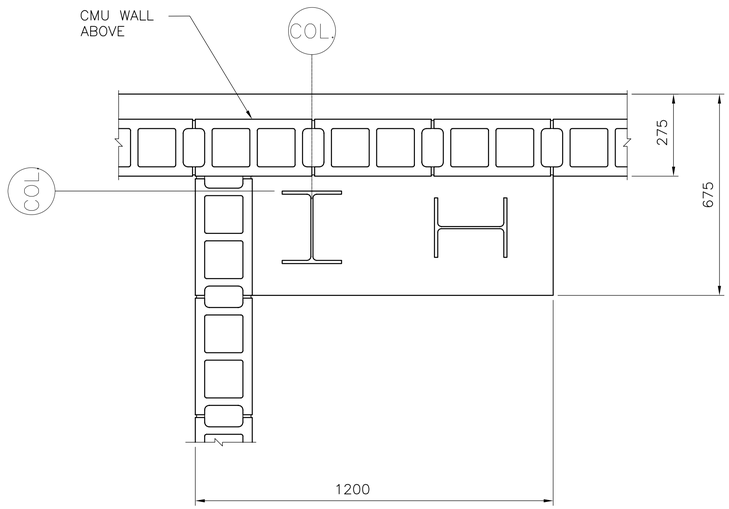

(SLAB LEVEL)

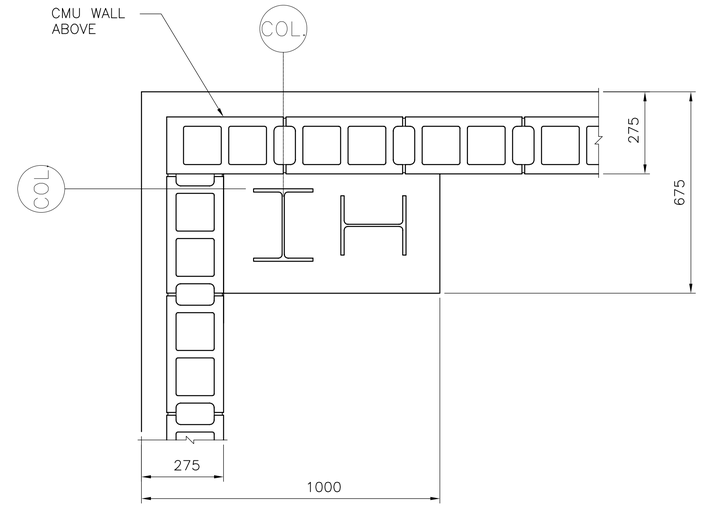

(SLAB LEVEL)

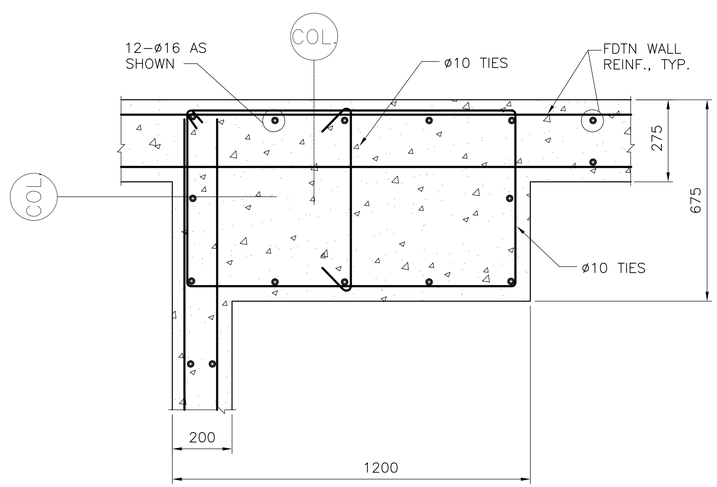

(FOUNDATION LEVEL)

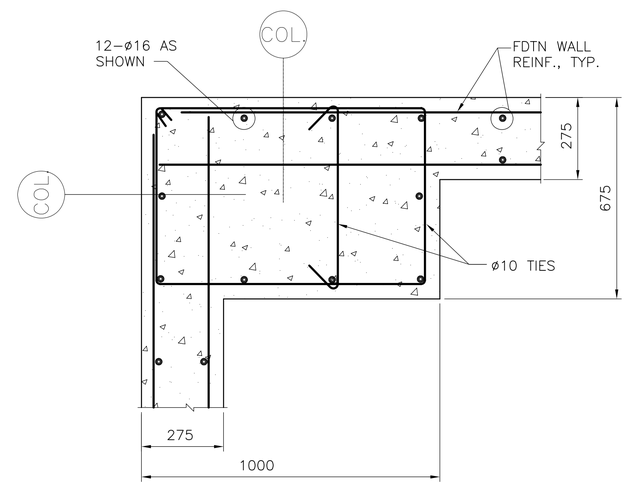

(FOUNDATION LEVEL)

- PEDESTAL P4

A–S–03 | REF. | SCALE: 1:10

- PEDESTAL P5

A–S–01 | REF. | SCALE: 1:10

200 0 200mm
SCALE: 1 = 10

UNLESS OTHERWISE NOTED, LINEAR DIMENSIONS SHOWN ARE IN MILLIMETERS.

SYMBOL	DESCRIPTION	DATE	APP.

Designed By: M. THOMPSON
Drawn By: D. SMITH
Checked By: M. THOMPSON
Date: 10 MAY 2007
File No. AF0707
I.S.O. Sheet File Name: AF0707A–SB05SE.DWG
Solicitation Number: –

US Army Corps of Engineers Transatlantic Programs Center

ANA REGIONAL BRIGADE
PAKTIKA, AFGHANISTAN
DPW BUILDING
COLUMN
PEDESTAL DETAILS

SHEET REFERENCE NUMBER:
A–S–05

$DATE$
$FILE$

D SIZE BORDER
32 X 20.5

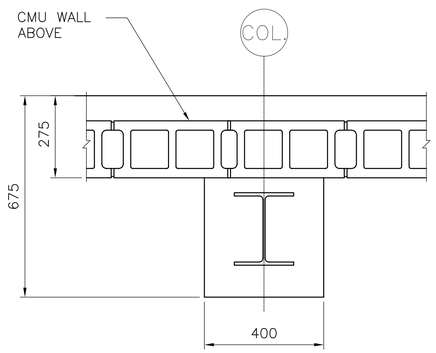

(SLAB LEVEL)

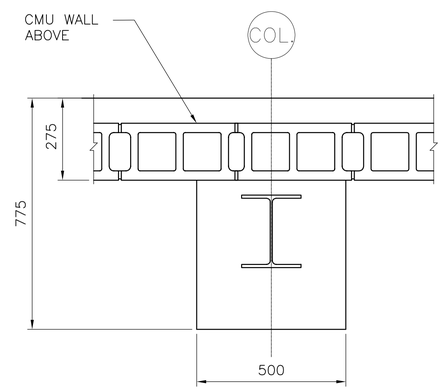

(SLAB LEVEL)

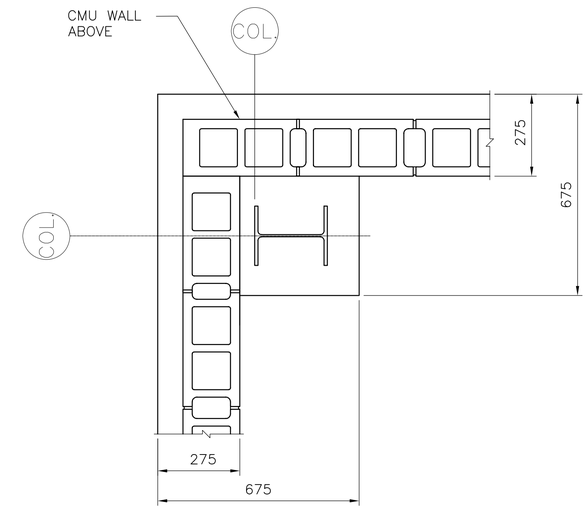

(SLAB LEVEL)

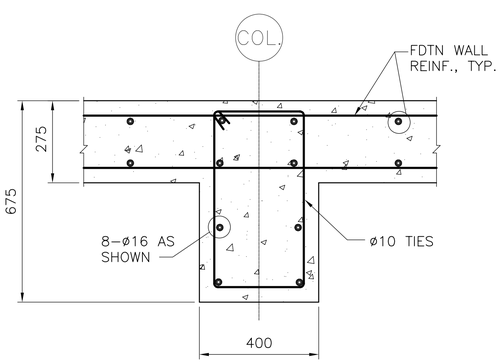

(FOUNDATION LEVEL)

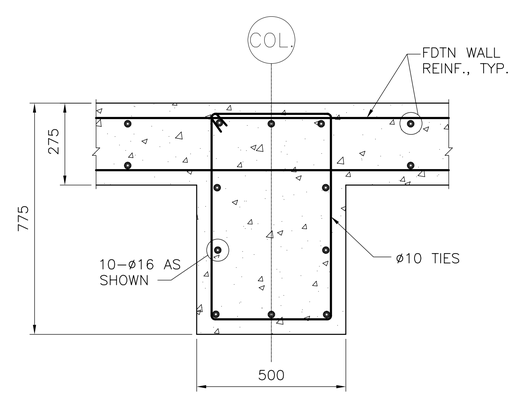

(FOUNDATION LEVEL)

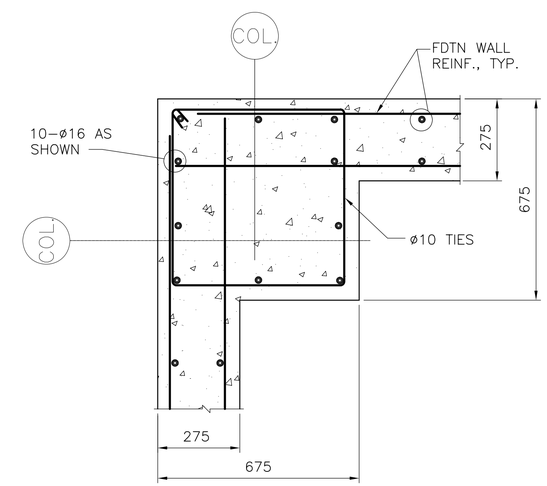

(FOUNDATION LEVEL)

- PEDESTAL P1

A–S–01 REF. SCALE: 1:10

- PEDESTAL P2

A–S–01 REF. SCALE: 1:10

- PEDESTAL P3

A–S–01 REF. SCALE: 1:10

200 0 200mm
SCALE: 1 = 10

UNLESS OTHERWISE NOTED, LINEAR DIMENSIONS SHOWN ARE IN MILLIMETERS.

SYMBOL	DESCRIPTION	DATE	APP.

Designed By: M. THOMPSON
Date: 10 MAY 2007
Drawn By: D. SMITH
File No. AF0707
Checked By: M. THOMPSON
I.S.O. Sheet File Name: AF0707A–SB04SE.DWG
Solicitation Number: –

US Army Corps of Engineers Transatlantic Programs Center

ANA REGIONAL BRIGADE
PAKTIKA, AFGHANISTAN
DPW BUILDING

COLUMN
PEDESTAL DETAILS

SHEET REFERENCE NUMBER:
A–S–04

$DATE$
$FILE$

D SIZE BORDER
32 X 20.5

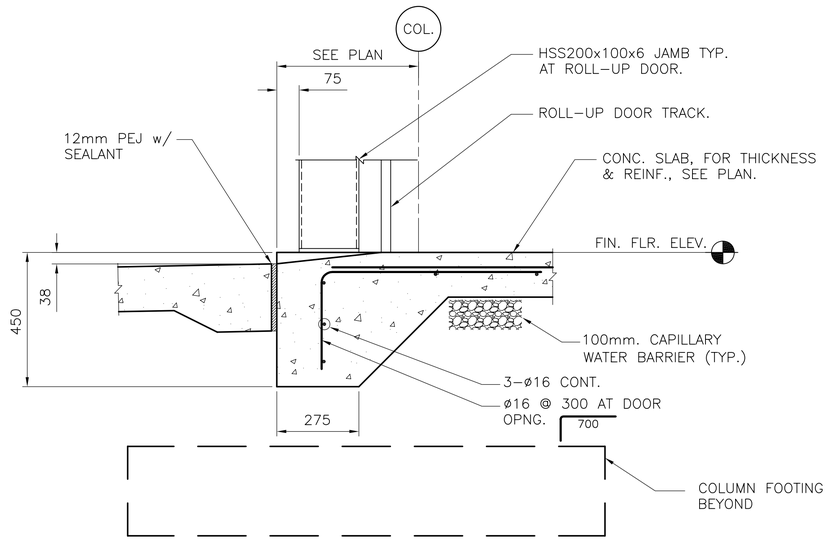

1 SECTION AT ROLL- UP DOOR

A-S-01 REF. SCALE: 1:10

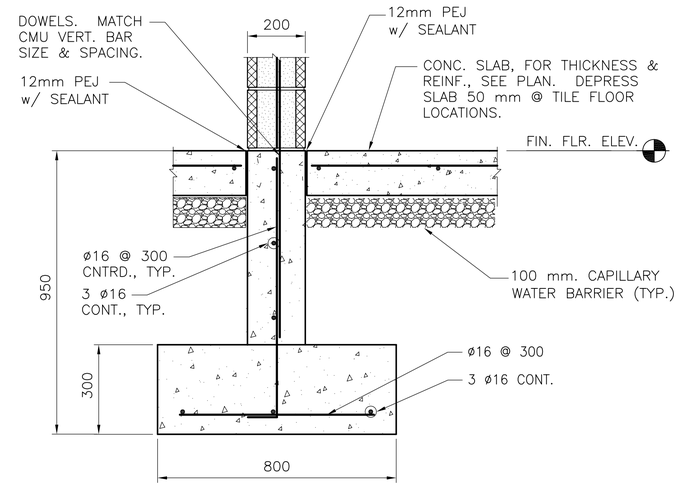

2 SECTION AT INTERIOR STEM WALL

A-S-01 REF. SCALE: 1:10

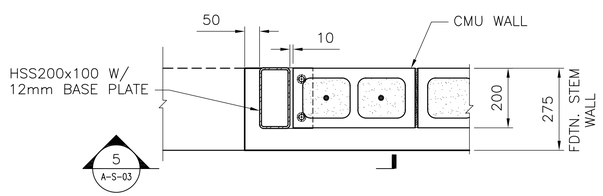

3 DETAIL AT ROLL- UP DOOR

A-S-01 REF. SCALE: 1:20

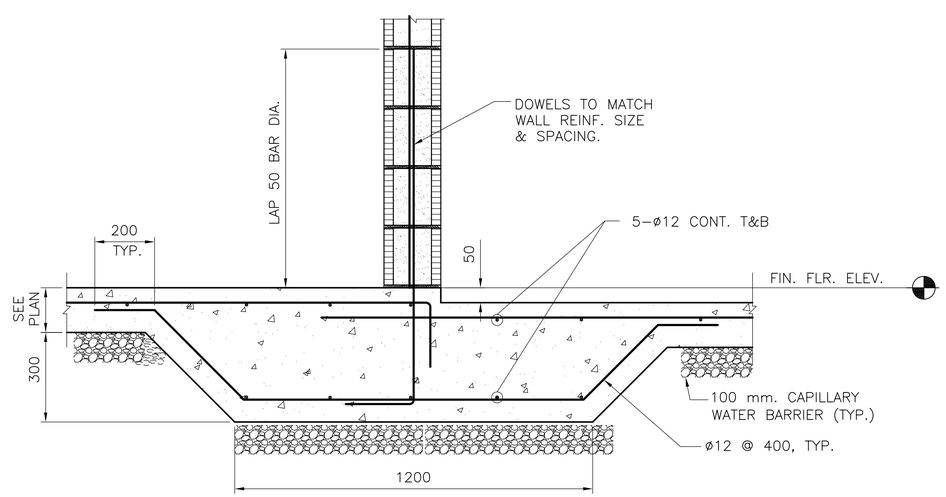

4 SECTION THUR CMU WALL WITH THICKENED SLAB

A-S-01 REF. SCALE: 1:10

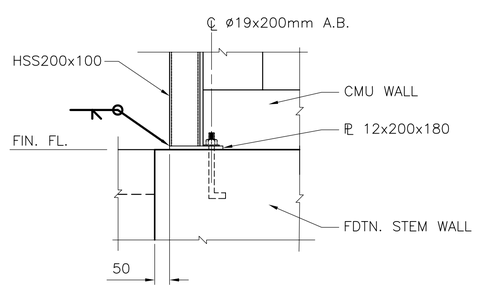

5 SECTION AT ROLL- UP DOOR

A-S-03 REF. SCALE: 1:10

200 0 200mm
SCALE: 1 = 10

UNLESS OTHERWISE NOTED, LINEAR DIMENSIONS SHOWN ARE IN MILLIMETERS.

SYMBOL	DESCRIPTION	DATE	APP.

Designed By: M. THOMPSON
Drawn By: D. SMITH
Checked By: M. THOMPSON
Date: 10 MAY 2007
File No. AF0707
I.S.O. Sheet File Name: AF0707A-SB03SE.DWG
Solicitation Number: –

US Army Corps of Engineers Transatlantic Programs Center

ANA REGIONAL BRIGADE
PAKTIKA, AFGHANISTAN
DPW BUILDING

FOUNDATION SECTIONS

SHEET REFERENCE NUMBER:
A-S-03

$DATE$
$FILE$

D SIZE BORDER
32 X 20.5

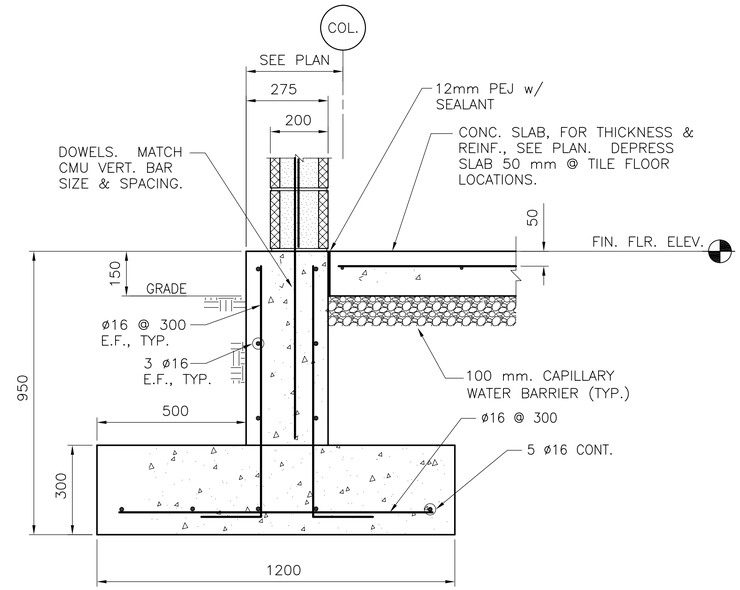

1 SECTION AT EXTERIOR CMU WALL

A-S-01 REF. SCALE: 1:10

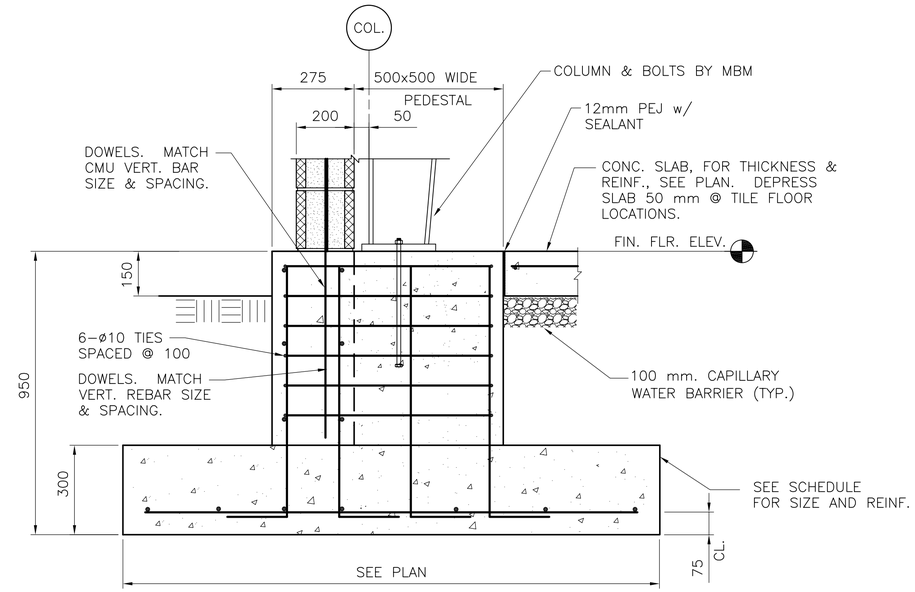

2 SECTION AT SIDEWALL COLUMN FOOTING

A-S-01 REF. SCALE: 1:10

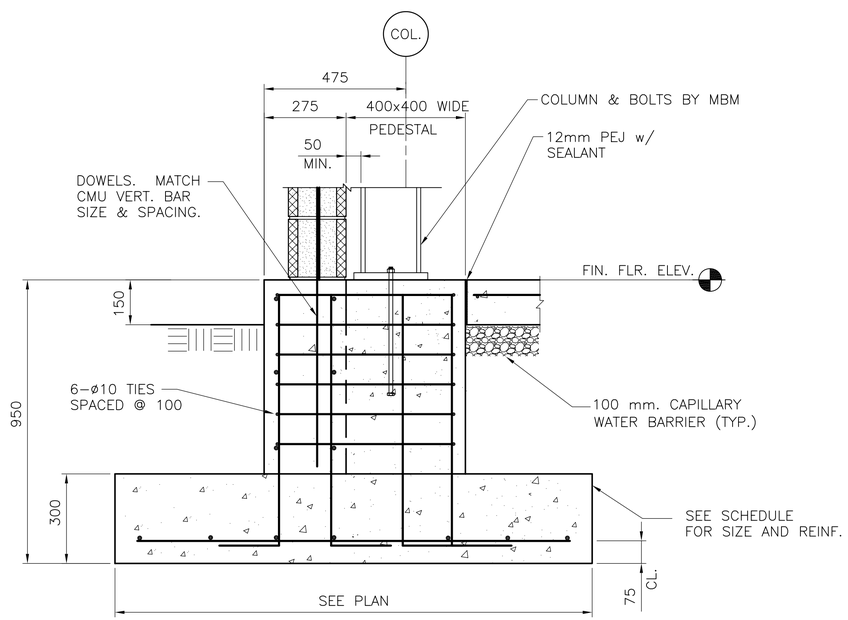

3 SECTION AT ENDWALL COLUMN FOOTING

A-S-01 REF. SCALE: 1:10

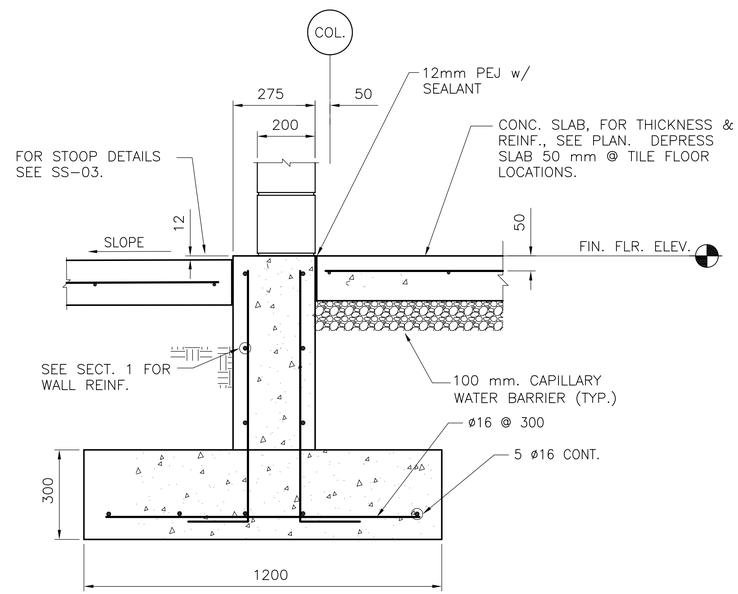

4 SECTION AT EXTERIOR DOOR

A-S-01 REF. SCALE: 1:10

200 0 200mm
SCALE: 1 = 10

UNLESS OTHERWISE NOTED, LINEAR DIMENSIONS SHOWN ARE IN MILLIMETERS.

SYMBOL	DESCRIPTION	DATE	APR

Designed By: M. THOMPSON
Date: 10 MAY 2007
Drawn By: D. SMITH
File No. AF0707
Checked By: M. THOMPSON
I.S.O. Sheet File Name: AF0707A-SB02SE.DWG
Solicitation Number: –

US Army Corps of Engineers Transatlantic Programs Center

ANA REGIONAL BRIGADE
PAKTIKA, AFGHANISTAN
DPW BUILDING

FOUNDATION SECTIONS
–

SHEET REFERENCE NUMBER:
A-S-02

$DATE$
$FILE$

D SIZE BORDER
32 X 20.5

SHEET NOTES:

1. CONT. UPPER BOND BEAM 200x200 W/ 2–ø12 CONT BARS TOP & BOT.

2. CMU WALL REINFORCEMENT SHALL BE ø16 @ 600. FULLY GROUT CELLS W/ REINFORCEMENT.

3. LOCATE OUTSIDE FACE OF CMU WALLS AT 75MM FROM OUTSIDE FACE OF CONCRETE STEM WALL.

4. TOP OF CMU WALL ELEVATION SHALL BE 2.8M A.F.F.

5. REFER TO SHEET A–SS–01 THRU 02 FOR TYPICAL MASONRY DETAILS AND JOINT DETAILS.

6. REFER TO SHEET A–SS–03 THRU 04 FOR TYPICAL SLAB DETAILS.

7. SLAB ON GRADE SHALL BE 150mm CONCRETE ON A 100mm CAPILLARY WATER BARRIER. SEE SHEET A–SS–03 FOR TYPICAL SLAB REINFORCEMENT

8. WHERE INTERIOR WALLS ARE LOCATED ON THICKENED SLABS, LOCATE MASONRY CONTROL JOINTS AT FLOOR SLAB CONTROL JOINTS.

COLUMN FOOTING SCHEDULE

MARK	SIZE	REINFORCING	PEDESTAL MARK
F1	1000 x 1600 x 300mm	TRANSVERSE – 7 ø16 (B) LONGITUDINAL – 4 ø16 (B)	P1
F2	1500 x 1800 x 300mm	TRANSVERSE – 7 ø16 (B) LONGITUDINAL – 6 ø16 (B)	P2
F3	1600 x 1600 x 300mm	7 ø16 E.W. (B)	P3
F4	2200 x 1800 x 300mm	TRANSVERSE – 7 ø16 (B) LONGITUDINAL – 7 ø16 (B)	P4
F5	2000 x 1800 x 300mm	TRANSVERSE – 7 ø16 (B) LONGITUDINAL – 7 ø16 (B)	P5

NOTE: FOR PEDESTAL DETAILS AND REINFORCEMENT, SEE SHEET A–S–04.

PRE–ENGINEERED BUILDING DESIGN REQUIREMENTS:

1. THE DESIGN SHALL BE IN ACCORDANCE WITH THE 2003 INTERNATIONAL BUILDING CODE.

2. DESIGN LOADS SHALL BE AS STATED IN THE GENERAL NOTES.

3. COLUMN BASE PLATES HAVE BEEN ASSUMED AS "PINNED" FOR THE FOUNDATION SHOWN.

4. LONGITUDINAL BRACE LOCATIONS HAVE BEEN SHOWN AT THE PREFERRED LOCATIONS. COORDINATE BRACE LOCATIONS WITH MECHANICAL AND ELECTRICAL EQUIPMENT.

5. THE METAL BUILDING MANUFACTURER SHALL PROVIDE THE DESIGN, FABRICATION AND DELIVERY OF ALL BUILDING ANCHOR BOLTS. THE BUILDING MANUFACTURER SHALL PROVIDE SETTING TEMPLATES FOR ALL EMBEDDED ANCHOR BOLTS. ALL ANCHOR BOLTS SHALL BE THE "HEADED" TYPE, BENT "L" BOLTS WILL NOT BE ACCEPTABLE.

6. SUBMITTAL OF SHOP DRAWINGS AND DESIGN CALCULATIONS IS REQUIRED PRIOR TO FABRICATION.

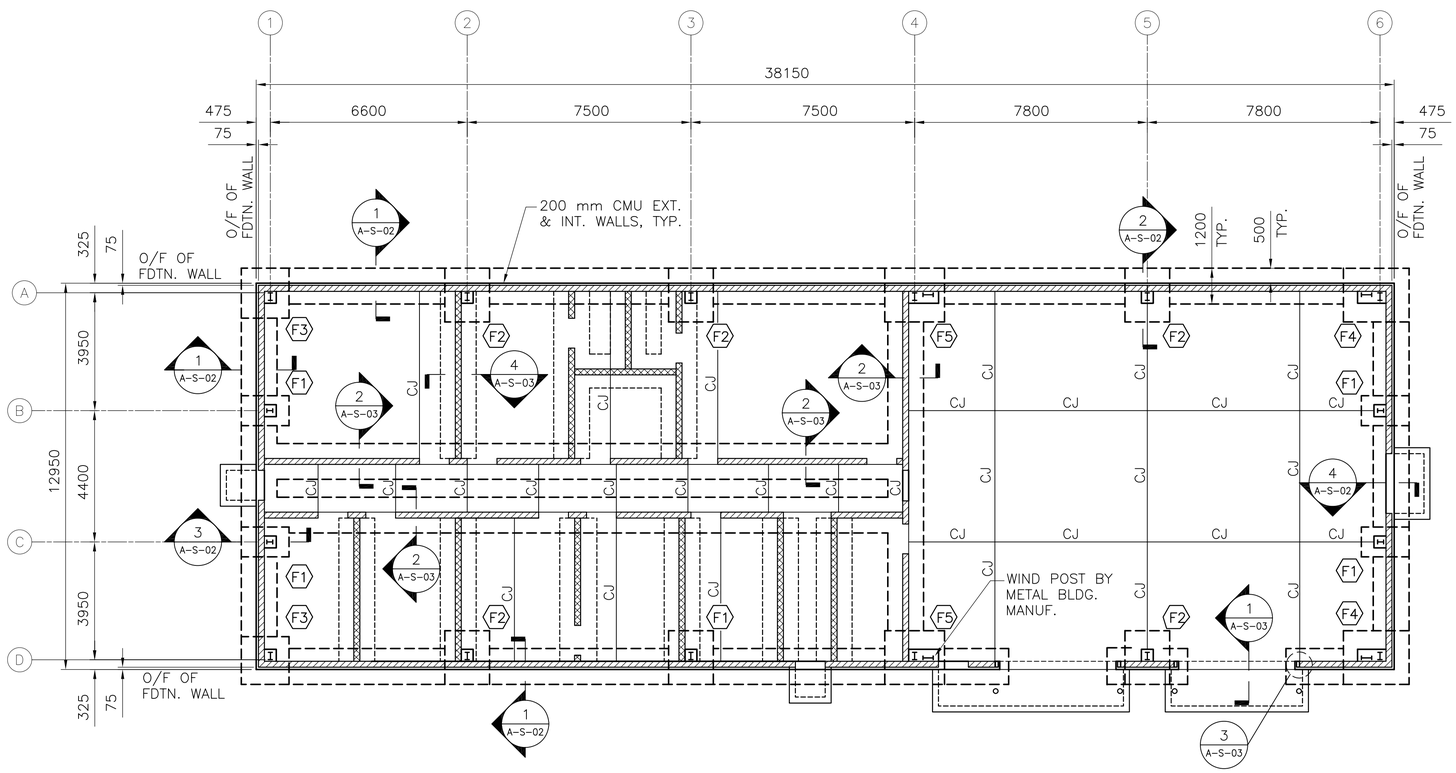

LEGEND:

CANTILEVERED CMU WALL ON SPREAD FOOTING; TOW AT EL. 2800

CANTILEVERED CMU WALL ON THICKENED SLAB; TOW AT EL. 2800

1 FOUNDATION PLAN

A–S–01 REF. SCALE: 1:100

2000 0 2000mm
SCALE: 1 = 100

UNLESS OTHERWISE NOTED, LINEAR DIMENSIONS SHOWN ARE IN MILLIMETERS.

SYMBOL	DESCRIPTION	DATE	APP.

Designed By:
Drawn By:
Checked By:
Date: 10 MAY 2007
File No. AF0707
I.S.O. Sheet File Name: AF0707A–SB01PN.DWG
Solicitation Number: –

US Army Corps of Engineers Transatlantic Programs Center

ANA REGIONAL BRIGADE
PAKTIKA, AFGHANISTAN
DPW BUILDING

FOUNDATION PLAN

SHEET REFERENCE NUMBER:
A–S–01

$DATE$
$FILE$

D SIZE BORDER
32 X 20.5

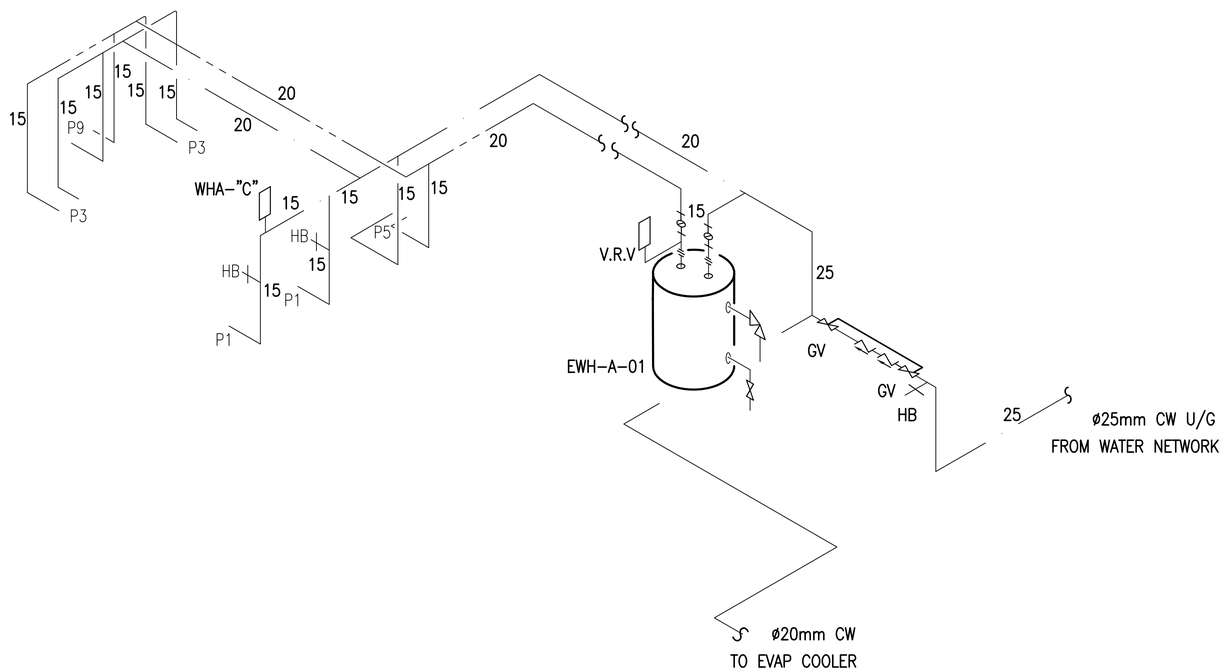

1 PLUMBING WATER RISER

SCALE: NONE

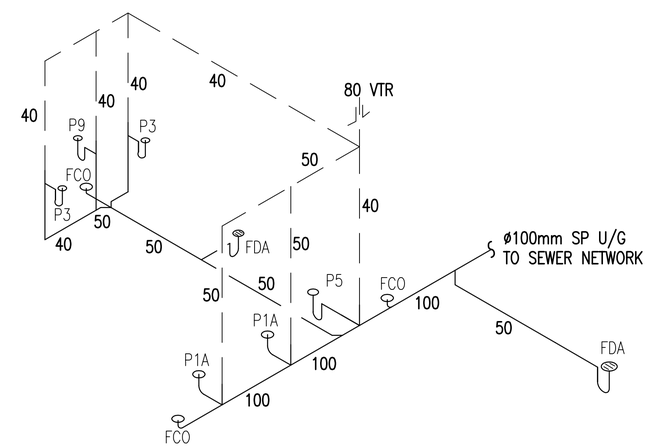

1 PLUMBING WASTE RISER

SCALE: NONE

UNLESS OTHERWISE NOTED, LINEAR DIMENSIONS SHOWN ARE IN MILLIMETERS.

SYMBOL	DESCRIPTION	DATE	APV

Designed By:
Date: 10 MAY 2007
Drawn By:
File No. AF0707
Checked By:
I.S.O. Sheet File Name: AF0707A-MP02IS.dwg
Solicitation Number: –

US Army Corps of Engineers Transatlantic Programs Center

ANA REGIONAL BRIGADE
PAKTIKA, AFGHANISTAN
DPW BUILDING
PLUMBING RISER
– –

SHEET REFERENCE NUMBER:
A–MP–02

$DATE$
$FILE$

D SIZE BORDER
32 X 20.5

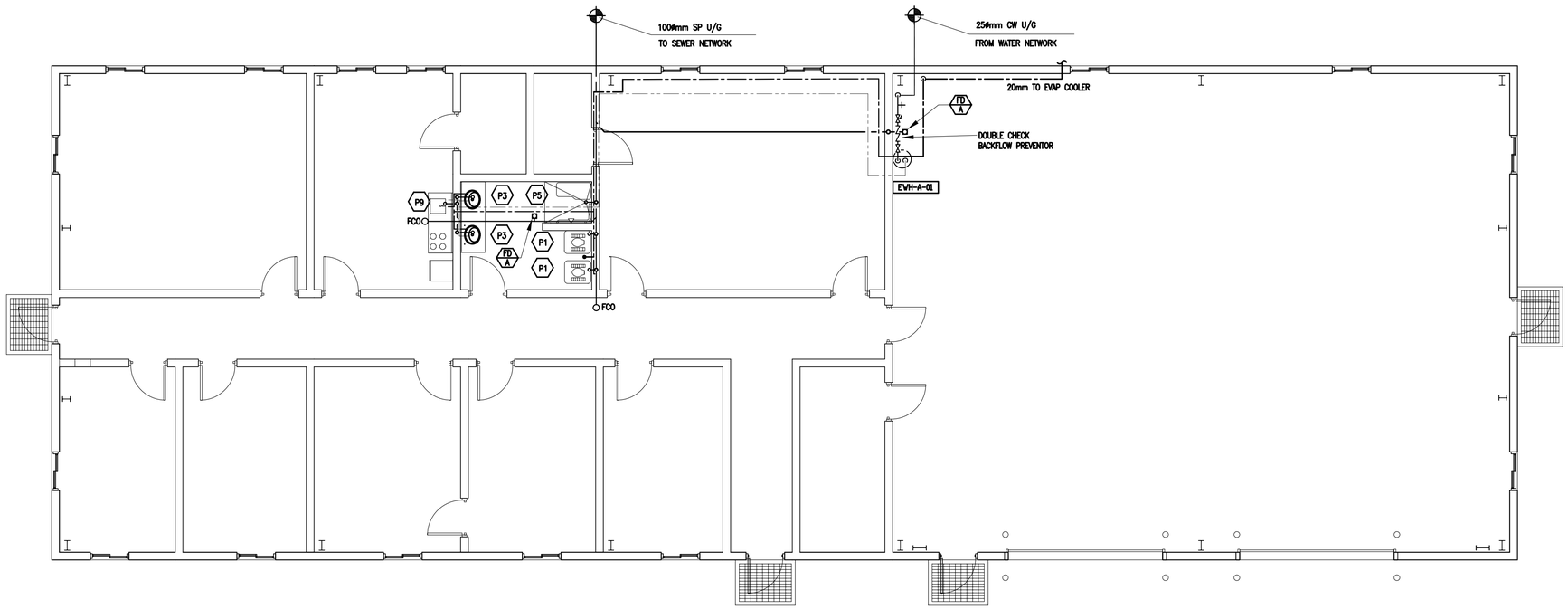

1 PLUMBING FLOOR PLAN

SCALE: 1:70

PLUMBING FIXTURE SCHEDULE

FIX. No.	SYMBOL	FIXTURE NAME	PLUMBING FIXTURE SCHEDULE								REMARKS
			C.W.		H.W.		WASTE		VENT		
			MM	(INCHES)	MM	(INCHES)	MM	(INCHES)	MM	(INCHES)	
P1		EASTERN WATER CLOSET (FLOOR OUTLET)	15	(1/2")	–	–	100	(4")	50	(2")	PROVIDE 15mm HOSE BIBBS ADJACENT TO UNIT
P3		LAVATORY (WALL HUNG)	15	(1/2")	15	(1/2")	40	(1 1/2")	40	(1 1/2")	
P5		SHOWER	15	(1/2")	15	(1/2")	50	(2")	40	(1 1/2") MIN.	
P9		KITCHEN SINK	15	(1/2")	15	(1/2")	50	(2")	40	(1 1/2")	

ELECTRIC WATER HEATER SCHEDULE

Ser No.	EWH Name	Capacity (Gallon)	Electrical Data	TEMPERATURE RISE	REMARKS
30	EWH-A-01	40 gal.	6KW/1PH/220V/50HZ	90F (49C)	

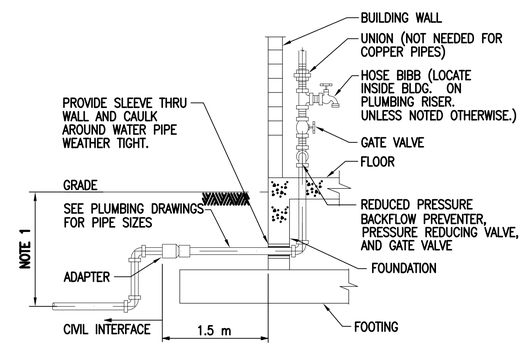

NOTE:
1. THE LEVEL OF WATER SUPPLY PIPE SHOULD BE MIN 800mm BELOW THE FINISH GRADE TO KEEP FROM FREEZING OTHER WISE ISULATION SHALL BE ADDED .

WATER SERVICE ENTRANCE DETAIL

SCALE: N.T.S

UNLESS OTHERWISE NOTED, LINEAR DIMENSIONS SHOWN ARE IN MILLIMETERS.

SYMBOL	DESCRIPTION	DATE	APP.

Designed By:
Drawn By:
Checked By:
Date: 10 MAY 2007
File No. AF0707
I.S.O. Sheet File Name: AF0707A-MP01PN.dwg
Solicitation Number: –

US Army Corps of Engineers Transatlantic Programs Center

ANA REGIONAL BRIGADE
PAKTIKA, AFGHANISTAN
DPW BUILDING
PLUMBING PLAN
– –

SHEET REFERENCE NUMBER:
A–MP–01

$DATE$
$FILE$

D SIZE BORDER
32 X 20.5

PLUMBING LEGEND

SYMBOL	DESCRIPTION
AV	ANGLE VALVE
BV	BALL VALVE
CV	CHECK VALVE
	COCK VALVE
DV	DRAIN VALVE
P7	EMERGENCY SHOWER AND EYE-WASH
FCO	FLOOR CLEANOUT
FD	FLOOR DRAIN
FS	FLOOR SIPHON
P13	FLOOR SINK (FS)
	GALITRAP (GT)
GV	GATE VALVE
HB	HOSE BIBB, PLAN
	INSPECTION MANHOLE
	PIPE TURNING DOWN
	PIPE TURNING UP
CO	PLUG CLEANOUT
	REDUCER-INCREASER
	SUPPORT LOCATION
	Y-TYPE STRAINER
U	UNION
VRV	VACUUM RELIEF VALVE
WHA	WATER HAMMER ARRESTOR

ABBREVIATION	DESCRIPTION
AC	AIR COMPRESSOR
℄	CENTER LINE
CA	COMPRESSED AIR
COYB	CLEANOUT IN YARD BOX
CW	COLD WATER PIPES
DT	DAY TANK
FOR	FUEL OIL RETURN
FOS	FUEL OIL SUPPLY
FT	FLASH TANK
H/L	HIGH LEVEL
HW	HOT WATER PIPES
IC	INSPECTION CHAMBER
I.L	INVERT LEVEL
LD	LEAK DETECTOR
L/L	LOW LEVEL
LSH	LEVEL SWITCH HIGH
LSHH	LEVEL SWITCH HIGH HIGH
LSL	LEVEL SWITCH LOW
LSLL	LEVEL SWITCH LOW LOW
LT	LEVEL TRANSMITTER
OW	OILY WASTE
OWS	OIL WATER SEPARATOR
P	PUMP
RP	RECIRCULATION PUMP
YCO	YARD CLEAN OUT
WOT	WASTE OIL STORAGE TANK
NT	NEUTRALIZATION TANK
GS	GREASE INTERCEPTOR

ABBREVIATION	DESCRIPTION
SP	SOIL PIPE
SR	SHORT RADIUS
U.G.	UNDER GROUND
VP	VENT PIPE
V.R.V	VACUUM RELIEF VALVE
WCO	WALL CLEANOUT
WHA	WATER HAMMER ARRESTOR
WO	WASTE OIL
WP	WASTE PIPE

LINE STYLE	DESCRIPTION
	COLD WATER (CW)
	HOT WATER (HW)
	VENT PIPE (VP)
	SOIL PIPE (SP)
	WASTE PIPE (WS)

EQUIPMENT IDENTIFICATION

EWH-XX-XX
- ELECTRIC WATER HEATER
- UNIT NUMBER
- BUILDING ABBREVIATION

NOTES:

1. INTERIOR SOIL AND WASTE PIPING 80 (3") AND SMALLER SHALL BE ROUTED WITH A 2% SLOPE. INTERIOR SOIL AND WASTE PIPING 100 (4") AND LARGER SHALL BE ROUTED WITH A MINIMUM 1% SLOPE.
2. EXTERIOR SOIL OR WASTE PIPING SHALL BE ROUTED WITH A 2% SLOPE WHEREVER POSSIBLE, OTHERWISE A MINIMUM SLOPE OF 1% SHALL BE USED.
3. WATER AND DRAINAGE PIPING SHALL BE EXTENDED 1.5 m OUTSIDE THE BUILDING UNLESS OTHERWISE INDICATED

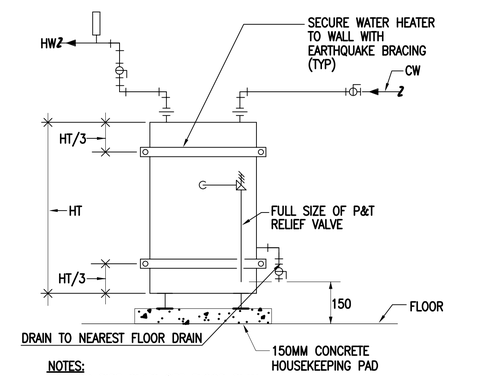

NOTES:
1-FOR PIPE SIZES SEE FLOOR PLAN.
2-SECURE WATER HEATER TO FLOOR WITH EXPANSION BOLTS, 20mm (3/4")MIN.

ELECTRIC WATER HEATER PIPING DETAIL

SCALE: N.T.S

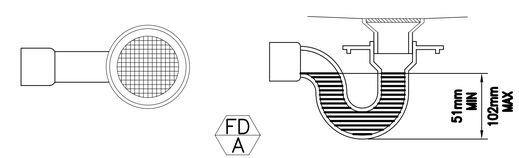

FLOOR DRAIN TYPE A

SCALE: N.T.S

UNLESS OTHERWISE NOTED, LINEAR DIMENSIONS SHOWN ARE IN MILLIMETERS.

SYMBOL	DESCRIPTION	DATE	APP.

Designed By:
Drawn By:
Checked By:
Date: 10 MAY 2007
File No. AF0707
I.S.O. Sheet File Name: AF0707A-MP01GN.dwg
Solicitation Number: –

US Army Corps of Engineers Transatlantic Programs Center

ANA REGIONAL BRIGADE
PAKTIKA, AFGHANISTAN
DPW BUILDING

PLUMBING LEGEND AND DETAILS
–

SHEET REFERENCE NUMBER:
A-GP-01

$DATE$
$FILE$

D SIZE BORDER
32 X 20.5

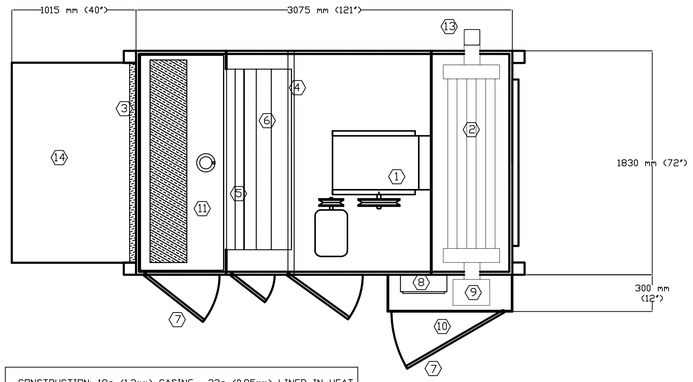

CONSTRUCTION: 18g (1.3mm) CASING. 22g (0.85mm) LINER IN HEAT EXCHANGER SECTION. INSULATION, 1" (25mm) @ 1.5 lb/ft3 (24 kg/m3). 4" (100mm) STRUCTURAL STEEL TUBE BASE. DRY ENAMEL FINISH.
APPROX. WT. 2700 lb (1227 kg)

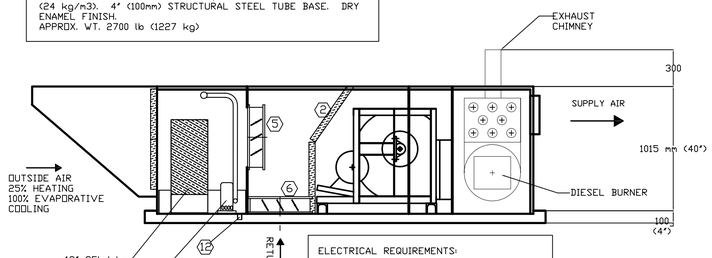

THE EVAPORATIVE-COOLER REQUIRES A 20mm WATER SUPPLY PIPE, AND A 20mm BLEED-OFF DRIAN PIPE TO A DRAIN-PIT. COORDINATE WITH CONTRACTING OFFICER FOR DRAINAGE LOCATION

ELECTRICAL REQUIREMENTS:

BLOWER-MOTOR + FUEL BLOWER & PUMP + EVAP. PUMP = 7.0 ekW.
I = 7000W / 1.73 / 380V / 0.8 = 13.3 amp

CONTROLS: EVAP/DIESEL UNITS SHALL BE STARTED THROUGH HEAT-COOL-OFF SWITCH AND RUN CONTINOUSLY TO HEAT AND COOL BUILDING. THERMOSTAT SHALL CONTROL SUPPLY TEMPERATURE OFF UNIT.

COOLING MODE: UNIT SHALL OPERATE IN 100% OA MODE. EF-DP-01 SHALL BE ENERGIZED, EXHAUST FAN EF-DP-02 SHALL BE DEENERGIZED.

HEATING MODE: UNIT SHALL OPERATE IN RETURN AIR MODE, RETURNING 75% OF SUPPLY AIR TO UNIT. OUTSIDE AIR SHALL BE 25%. EF-DP-01 SHALL BE DENERGIZED, EXHAUST FAN EF-DP-02 SHALL BE ENERGIZED.

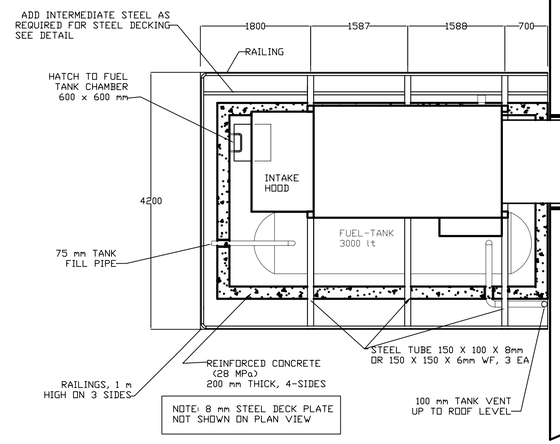

NOTE: 8 mm STEEL DECK PLATE NOT SHOWN ON PLAN VIEW

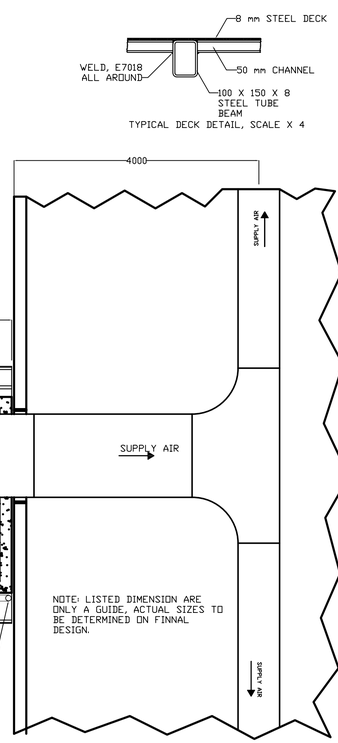

NOTE: LISTED DIMENSION ARE ONLY A GUIDE, ACTUAL SIZES TO BE DETERMINED ON FINNAL DESIGN.

TYPICAL DECK DETAIL, SCALE X 4

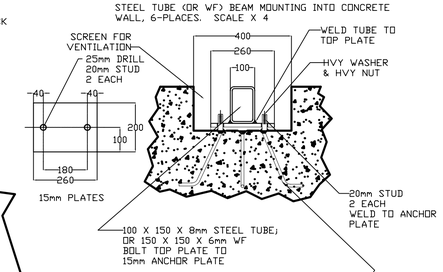

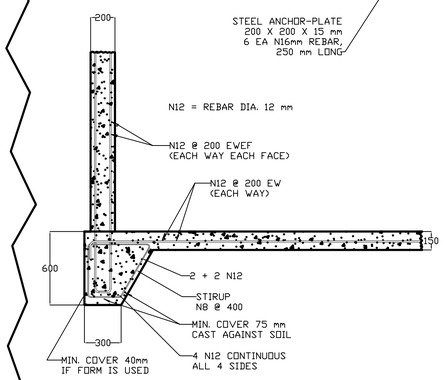

REINFORCED CONCRETE (NO MASONRY) FUEL-TANK ENCLOSURE & MOUNTING PLATFORM FOR HEAT-COOL UNIT.

THE HEAT-COOL-UNIT MUST BE FACTORY BUILT FROM A SINGLE MANUFACTURER.

AAON MODEL No: DT-??/SW/HV, AAON INTERNATIONAL = OR EQUAL = E-mail ABILLDK@WORLDNET.ATT.NET = TEL: USA, 623-433-9880	
1	S/A FAN & MOTOR: 7000 cfm (11890 m3/h) @ ESP 1" W.C. – MOTOR 7.5 Hp, 2 SPEED, 380v/3/50Hz, TEFC, MIN. 40°C AMBIENT
2	AAON INDIRECT-FIRED STAINLESS-STEEL HEAT EXCHANGER. INPUT 350 MBH (102 TKw); DIESEL FUEL; AIR TEMP. RISE 48 °F (27 °C)
3	2" (50mm) 30% EFF WASHABLE PRE-FILTERS.
4	2" (50mm) 30% EFF. PLEATED FINAL-FILTERS.
5	OUTSIDE AIR DAMPER with ACTUATOR.
6	RETURN AIR DAMPER with ACTUATOR.
7	ACCESS DOORS (TYP), HINGED with CAMLOCK
8	ELECTRICAL PANEL
9	DIESEL FUEL BURNER - RIELLO 40 (No. 2 FUEL OIL); FIRING RATE 1.45 TO 2.95 gph (5.49 TO 1117 lt/h); CAPACITY 203 TO 413 MBH (60 TO 120 tkW) FUEL PRESSURE 100 TO 200 psig (690 TO 1380 KPa).
10	ELECTRICAL & PIPING VESTIBULE
11	EVAPORATIVE COOLING SECTION, EVAP. PADS: 12" CELdek MEDIA @ 85% EFF. Complete with WATER-PUMP, FLOAT-VALVE, DISTRIBUTORS & PIPE.
12	STAINLESS-STEEL SUMP TANK with 3/4" NPT DRAIN PIPE & BLEED-OFF OVERFLOW (to prevent mineral build-up in evap. water).
13	BURNER EXHAUST CHIMNEY 5" X 5 " (125 X 125 mm).
14	OUTDOOR AIR INTAKE HOOD with BIRDSCREEN.

AAON MODEL No. DT-??/SW/HV (DWG: PDM-3788), WT. 2700 lb (1230 Kg)
CONTACT: ANDREW J. BILLDK, AAON INTERNATIONAL; AJB ASSOCIATES, INC.
3120 WEST CAREFREE HIGHWAY, PHOENIX, AZ 85086; TEL: 623-433-9880
E-MAIL: ABILLDK@WORLDNET.ATT.NET
HEAT-COOL-UNITS MANUFACTURED BY AAON CANADA, LEAD TIME 16 TO 18 WEEKS FOR UP TO 100 UNITS ORDERED AT ONE TIME. FACTORY IS LOCATED IN BURLINGTON, ONTARIO, CANADA.

APPROX. CONCRETE 28 MPa:
FOUNDATION-SLAB : 6.5 m3
ENCLOSURE-WALLS : 6.0 m3
AT 1.5 m HIGH

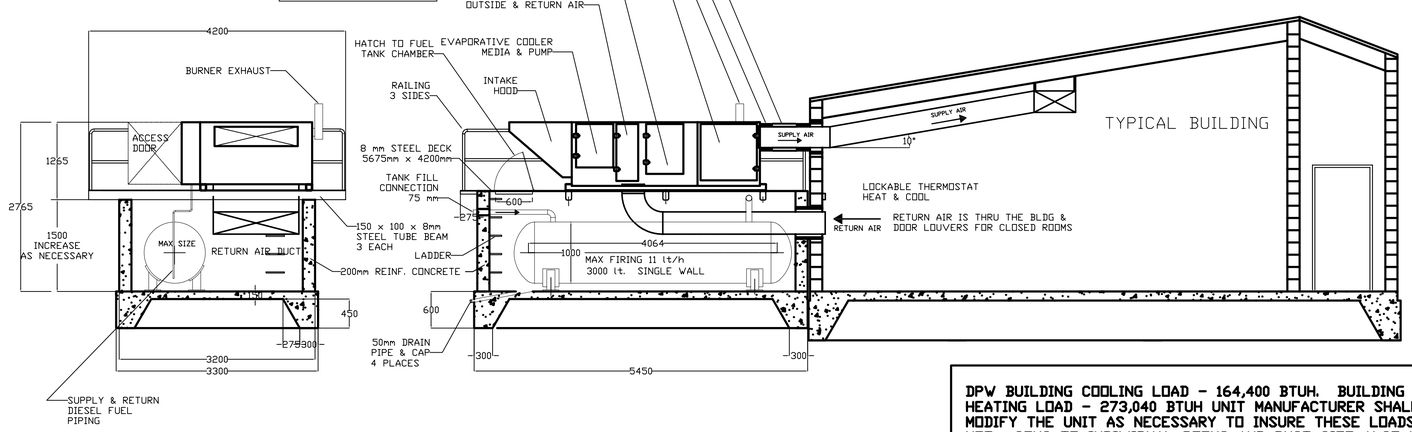

DPW BUILDING COOLING LOAD - 164,400 BTUH. BUILDING HEATING LOAD - 273,040 BTUH UNIT MANUFACTURER SHALL MODIFY THE UNIT AS NECESSARY TO INSURE THESE LOADS ARE MET. CFMS TO INDIVIDUAL ROOMS AND DUCT SIZE ALSO MAY BE MODIFIED.

UNLESS OTHERWISE NOTED, LINEAR DIMENSIONS SHOWN ARE IN MILLIMETERS.

SYMBOL	DESCRIPTION	DATE	APP.

Date: 10 MAY 2007
File No. AF0707
I.S.O. Sheet File Name: AF0707A-WH04GN.dwg
Solicitation Number: –
Designed By:
Drawn By:
Checked By:

US Army Corps of Engineers Transatlantic Programs Center

ANA REGIONAL BRIGADE
PAKTIKA, AFGHANISTAN
DPW BUILDING
HVAC DETAILS
– –

SHEET REFERENCE NUMBER:
A–DM–03

D SIZE BORDER
32 X 20.5

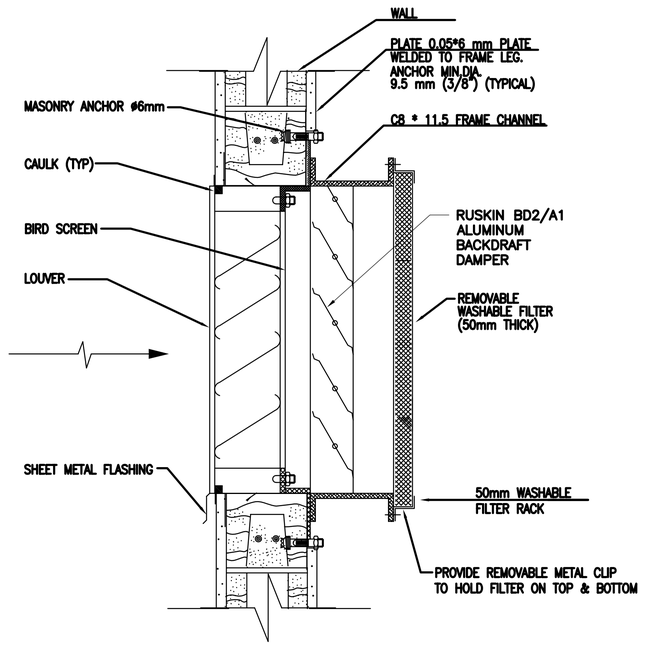

3 WASHABLE FILTER LOUVER DETAILS

SCALE: N.T.S

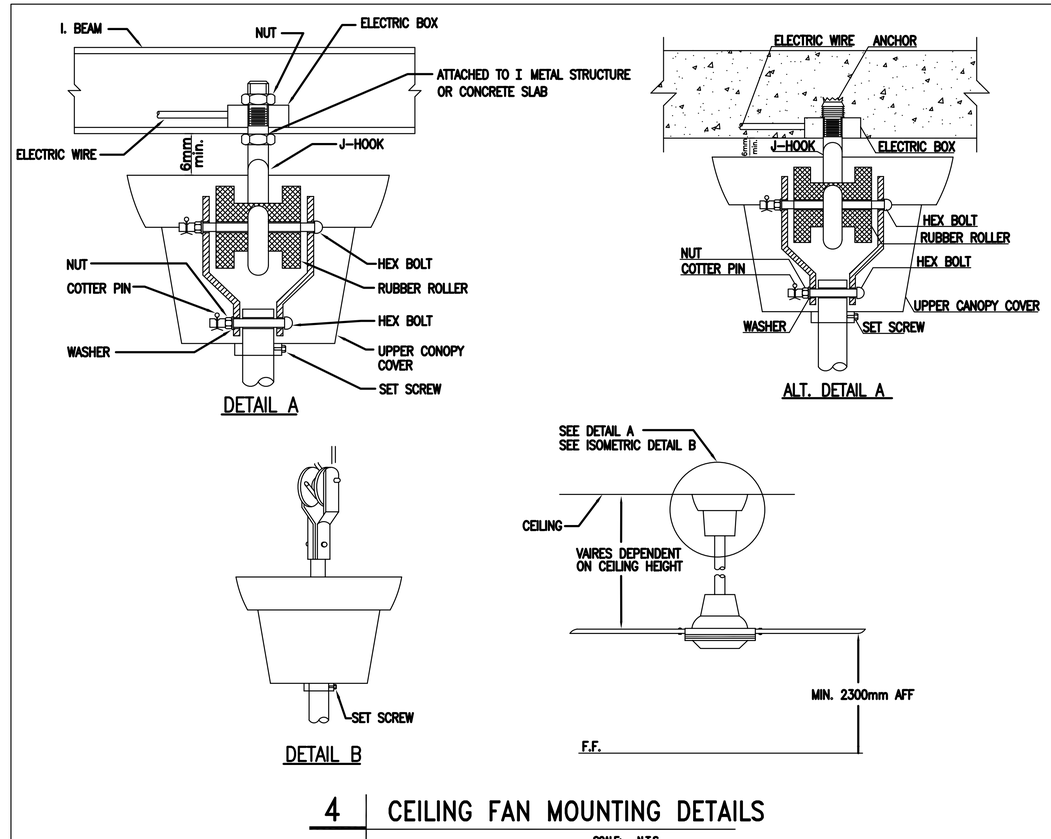

4 CEILING FAN MOUNTING DETAILS

SCALE: N.T.S

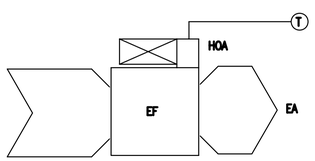

START-UP
THE ROOF EXHAUST FANS SHALL BE STARTED MANUALLY BY PLACING THE HAND-OFF-AUTO (HOA) SWITCH IN THE HAND POSITION. IN THE AUTO POSITION, THE FANS SHALL BE INTERLOCKED WITH THE EVAP/DIESEL UNIT.

5 EXHAUST FAN CONTROL DIAGRAM & SEQUENCE OF OPERATION

SCALE: N.T.S

UNLESS OTHERWISE NOTED, LINEAR DIMENSIONS SHOWN ARE IN MILLIMETERS.

SYMBOL	DESCRIPTION	DATE	APP.

Designed By:
Drawn By:
Checked By:
Date: 10 MAY 2007
File No. AF0707
I.S.O. Sheet File Name: AF0707A-MH03GN.dwg
Solicitation Number: –

US Army Corps of Engineers Transatlantic Programs Center

ANA REGIONAL BRIGADE
PAKTIKA, AFGHANISTAN
DPW BUILDING
HVAC DETAILS
– –

SHEET REFERENCE NUMBER:
A-DM-02

$DATE$
$FILE$

D SIZE BORDER
32 X 20.5

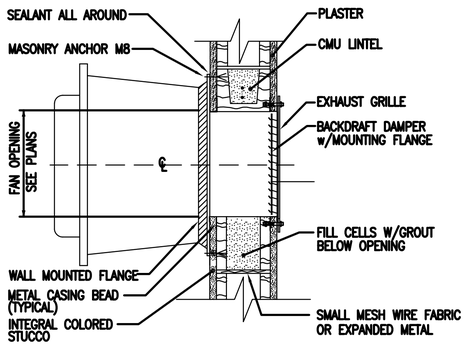

NOTES:–

* GASKET MATERIAL TO BE PROVIDED TO BOTTOM OF FAN INSIDE MOUNTING ANGLES.

1 WALL MOUNTED EXHAUST FAN INSTALLATION DETAIL

SCALE: N.T.S

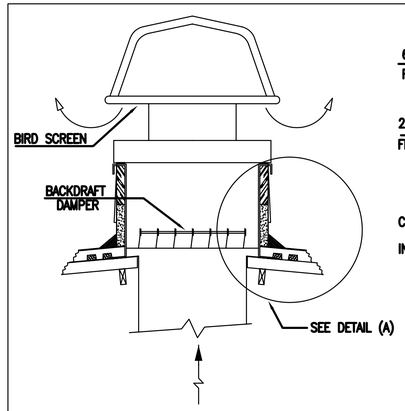

EXHAUST HOOD

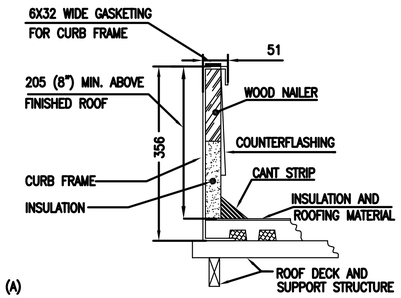

CURB DETAIL A

2 ROOF MOUNTED EXHAUST FAN DETAIL

SCALE: N.T.S

UNLESS OTHERWISE NOTED, LINEAR DIMENSIONS SHOWN ARE IN MILLIMETERS.

SYMBOL	DESCRIPTION	DATE	APR

Designed By:
Drawn By:
Checked By:
Date: 10 MAY 2007
File No. AF0707
I.S.O. Sheet File Name: AF0707A–WH02GN.dwg
Solicitation Number: –

US Army Corps of Engineers Transatlantic Programs Center

ANA REGIONAL BRIGADE
PAKTIKA, AFGHANISTAN
DPW BUILDING
HVAC DETAILS
– –

SHEET REFERENCE NUMBER:
A–DM–01

$DATE$
$FILE$

D SIZE BORDER
32 X 20.5

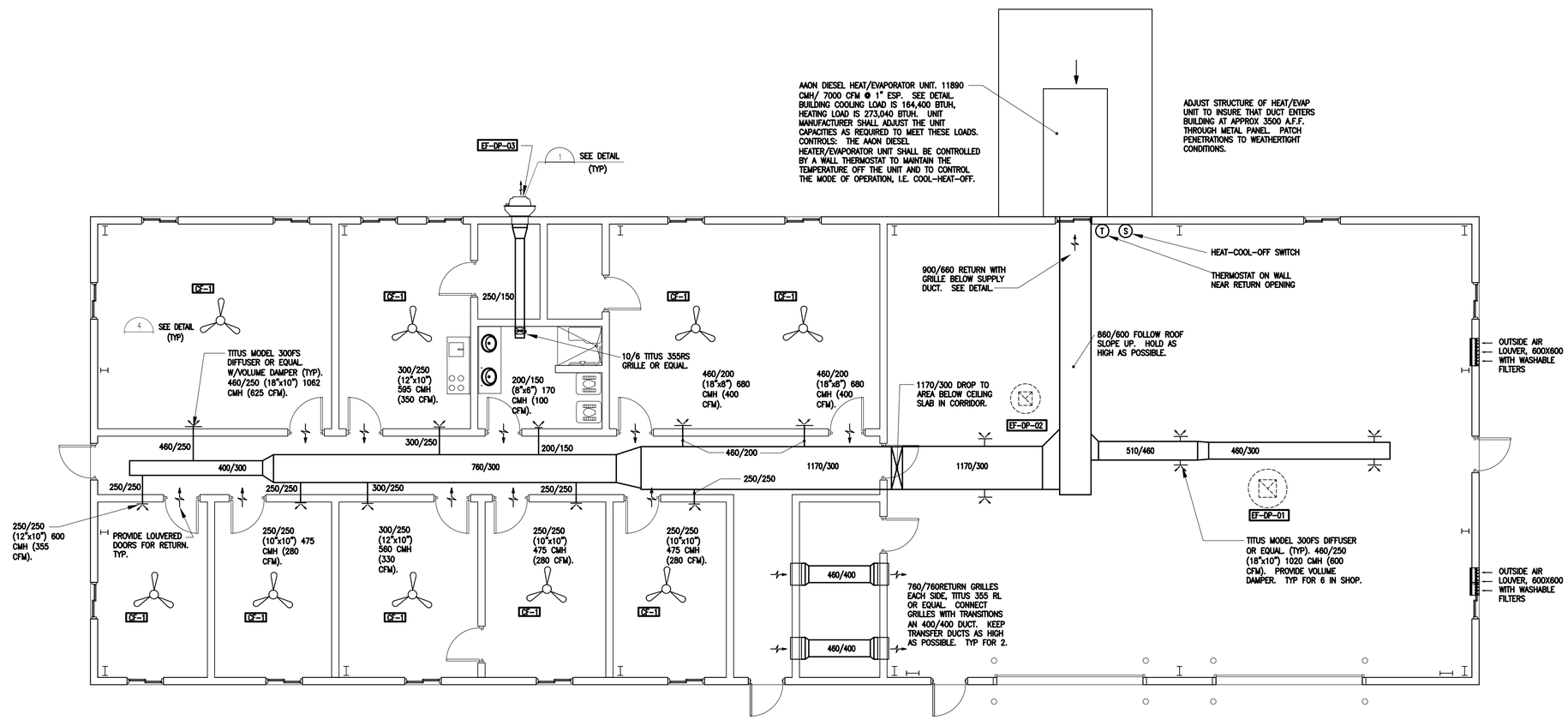

1 HVAC FLOOR PLAN

SCALE: 1:70

CEILING FAN SCHEDULE (CF)

UNIT NUMBER	TYPE (NOTE 1)	FAN DIAMETER	MAX WATTS	ELECTRICAL DATA			REMARKS
				VOLTS	PHASE	HERTZ	
CF-1	WITH LIGHT	48 in	100	220	1	50	3-SPEED

NOTES:- 1- WITH LIGHT FIXTURE - (2) 13 WATT FLOURESCENT BULBS
2- BOTTOM OF FAN MOUNTING HEIGHT = MINIMUM 2500mm A.F.F
3- PROVIDE WITH REMOTE WALL MOUNTED, SWITCH LOCATED ADJACENT TO THERMOSTAT. SWITCH TO CONTROL FAN AND LIGHTS SEPERATELY.

EXHAUST FAN SCHEDULE (EF)

UNIT NUMBER	SERVICE	TYPE	AIR QUANTITY		MINIMUM WHEEL DIAMETER		FAN	STATIC PRESSURE		ELECTRICAL DATA				TEMP CONTROL DIAGRAM	INTERLOCK WITH	DRIVE TYPE	REMARKS
			CMH	CFM	MM	INCHES	RPM	mmH20	IN W.G.	H.P.	VOLTS	PHASE	HERTZ				
EF-DP-01	VENT	R-CTFG-GP	11893	7000	NA	NA	1000	6.35	0.25	2	220	1	50	DETAIL	EVAP	BELT	NOTES 2
EF-DP-02	VENT	R-CTFG-GP	2973	1750	NA	NA	1725	2.54	0.1	1/4	220	1	50	NONE	EVAP	DIRECT	NOTES 2
EF-DP-03	VENT	W-CTFG-GP	255	150	NA	NA	1550	2.54	0.1	1/60	220	1	50	NONE	SWITCH	DIRECT	NOTES 1, 2

MANUFACTURER SHALL PROVIDE NECESSARY TRANSFORMERS ON ALL UNITS TO MEET ELECTRICAL REQUIREMENT.
NOTE 1. SUPPLIED WITH BACKDRAFT DAMPER
NOTE 2. ALL EXHAUST FANS WITH SINGLE PHASE POWER ARE TO BE PROVIDED w/ A FACTORY MOUNTED DISCONNECT SWITCH.

ROOF MOUNTED FANS TO BE PROVIDED W/ FACTORY ROOF CURB.

FAN SCHEDULE TYPE - LEGEND
(REF. EXHAUST AND SUPPLY FAN SCHEDULES)
R-CTFG-GP

R =ROOF
W =WALL
IL =INLINE
CL =CEILING

GP = GENERAL PURPOSE
EP = EXPLOSION PROOF
DB = DOWN BLAST
UB = UP BLAST
UT = UTILITY SET

CTFG = CENTRIFUGAL
PROP = PROPELLER
TUBA = TUBE AXIAL

UNLESS OTHERWISE NOTED, LINEAR DIMENSIONS SHOWN ARE IN MILLIMETERS.

SYMBOL	DESCRIPTION	DATE	APP.

Designed By:
Date: 10 MAY 2007
Drawn By:
File No. AF0707
Checked By:
I.S.O. Sheet File Name: AF0707A-MH01PN.dwg
Solicitation Number: -

US Army Corps of Engineers Transatlantic Programs Center

ANA REGIONAL BRIGADE
PAKTIKA, AFGHANISTAN
DPW BUILDING
HVAC PLAN
- -

SHEET REFERENCE NUMBER:
A-MH-01

$DATE$
$FILE$

D SIZE BORDER
32 X 20.5

ABBREVIATIONS

ABV. CLG	:–	ABOVE CEILING
AFF	:–	ABOVE FINISH FLOOR
AHU	:–	AIR HANDLING UNIT
AMPS	:–	AMPERES
B.D	:–	BACKDRAFT DAMPER
B.H	:–	BASE BOARD HEATER
B.M.O	:–	BELL MOUTH OPENING
BOP	:–	BOTTOM OF PIPE
BTU/H	:–	BRITISH THERMAL UNITS PER HOUR
CD	:–	CONDENSATE DRAIN
CF	:–	CEILING FAN
C.F.M	:–	CUBIC FEET PER MINUTE
C.M.H	:–	CUBIC METER PER HOUR
CONN	:–	CONNECTION
CORR	:–	CORRUGATED
CU	:–	CONDENSING UNIT
DB	:–	DRY BULB
DH	:–	DIESEL UNIT HEATER
DIA	:–	DIAMETER
D.L	:–	DOOR LOUVER
DT	:–	DAY TANK
DWG	:–	DRAWING
EF	:–	EXHAUST FAN
EL	:–	EXHAUST LOUVER
ENT	:–	ENTERING
EXH.G	:–	EXHAUST GRILLE
EXT	:–	EXTERNAL
F.A.D	:–	FRESH AIR DUCT
FD	:–	FIRE DAMPER
FLA	:–	FULL LOAD AMPERES
FOR	:–	FUEL OIL RETURN
FO	:–	FUEL OIL
FOS	:–	FUEL OIL SUPPLY
FPM	:–	FEET PER MINUTE
FT	:–	FEET
GALV	:–	GALVANIZED
HP	:–	HORSE POWER
KW	:–	KILO WATTS
LD	:–	LEAK DETECTOR
L/S	:–	LITERS PER SECOND
LT	:–	LEVEL TRANSMITTER

ABBREVIATIONS

LVG	:–	LEAVING
MRAD	:–	MOTORIZED RETURN (RECIRCULATION)
MAID	:–	MOTORIZED AIR INTAKE DAMPER
MEAD	:–	MOTORIZED EXHAUST AIR DAMPER
M.D	:–	MOTORIZED DAMPER
mm	:–	MILLIMETERS
MPS	:–	METERS PER SECOND
NC	:–	NORMALLY CLOSED
NO	:–	NORMALLY OPEN
OC	:–	ON CENTERS
OSA	:–	OUTSIDE AIR
P	:–	PUMP
PACU	:–	PACKAGE AIR CONDITIONING UNIT
P.S	:–	POWER SUPPLY
R.C.D	:–	RETURN CEILING DIFFUSER
R.D	:–	RETURN AIR DUCT
RED	:–	REDUCTION/REDUCER
R.G	:–	RETURN GRILLE
RPM	:–	REVOLUTIONS PER MINUTE
RS	:–	REFRIGERANT SUCTION
RL	:–	REFRIGERANT LIQUID
S.C.D	:–	SUPPLY CEILING DIFFUSER
S.D	:–	SUPPLY DUCT
SF	:–	SUPPLY FAN
S.G	:–	SUPPLY GRILLE
SM.D	:–	SMOKE DETECTOR
SP	:–	STATIC PRESSURE
SQ	:–	SQUARE
SR	:–	SHORT RADIUS
S.R–X	:–	SUPPLY REGISTER TYPE–X
SS	:–	STAINLESS STEEL
SU	:–	SPLIT UNIT
T	:–	SPACE THERMOSTAT
T.G	:–	TRANSFER GRILLE
TOS	:–	TOP OF SUPPORT
TYP	:–	TYPICAL
U.C	:–	UNDER CUT
UH	:–	UNIT HEATER
V.D	:–	VOLUME DAMPER
WB	:–	WET BULB
WG	:–	WATER GAGE

SYMBOLS

- :– SWITCH
- :– THERMOSTAT
- :– TEMPERATURE SENSOR
- :– MOTORIZED DAMPER
- :– CARBON MONOXIDE SENSOR
- :– CEILING FAN
- :– THRU WALL EXHAUST FAN
- :– BASE BOARD HEATER
- :– UNIT HEATER
- :– DIESEL UNIT HEATER
- :– OUTSIDE INTAKE LOUVER
- :– GRAVITY RIDGE VENT
- :– EXHAUST ROOF FAN
- :– SUPPLY ROOF FAN
- :– SPLIT UNIT
- :– CONDENSING UNIT
- :– FINISH FLOOR LEVEL IN (m) MEASURED FROM REFRENCE +0.00 LEVEL
- :– SUPPLY SECTION FAN
- :– FIRE DAMPER
- :– VOLUME DAMPER
- :– DOOR LOUVER
- :– UNDER CUT

DUCTWORK

- SUPPLY AIR DIFFUSER – ARROWS INDICATE PATTERN. NO PATTERN SHOWN EQUALS 4–WAY.
- RETURN AIR GRILLE
- EXHAUST GRILLE
- SUPPLY AIR SLOT
- RETURN AIR SLOT
- ROUND DUCTWORK. DIAMETER INDICATED IN MILLIMETER
- RECTANGULAR DUCTWORK. SIZE INDICATED IN INCHES, FIRST NUMBER IS SIDE SHOWN.
- FLEXIBLE DUCT
- SUPPLY OR OUTSIDE AIR DUCT
- RETURN AIR DUCT.
- RELIEF OR EXHAUST AIR DUCT.
- 90 DEGREE DUCTWORK ELBOW.
- RADIUS DUCTWORK ELBOW – ROUND OR RECTANGULAR.
- RECTANGULAR DUCTWORK BRANCH TAKE–OFF WITH 45 DEGREE BRANCH INLET.
- FLARED SPIN–IN WITH DAMPER AND FLEX DUCT (DIFFUSER CONNECTION).
- ROUND DUCT BRANCH TAKE–OFF FROM RECTANGULAR MAIN WITH CONICAL TAP.
- DUCTWORK SIZE TRANSITION.
- DUCT PRESSURE CLASS. POINT OF CHANGE IN DUCT CONSTRUCTION.
- FLEXIBLE DUCT CONNECTION
- SUPPLY OR OUTSIDE AIR DUCT UP
- SUPPLY OR OUTSIDE AIR DUCT DOWN
- RETURN AIR DUCT UP
- RETURN AIR DUCT DOWN
- RELIEF OR EXHAUST AIR DUCT UP
- RELIEF OR EXHAUST AIR DUCT DOWN
- IN–LINE 90 DEGREE DROP (RISE) IN DUCT
- INCLINED RISE IN DUCT
- INCLINED DROP IN DUCT

NOTES:

1– ALL DIMENSIONS ARE IN MM UNLESS OTHERWISE NOTED.

2– DUCT DIMENSION INDICATES INSIDE DIMENSIONS.

3– EXACT LOCATIONS OF POWER SUPPLY POINTS, CONTROL PANEL AND MOTOR SWITCH TO BE TAKEN FROM ELECTRICAL DESIGN DRAWINGS.

4– THERMOSTAT HEIGHT IS 1525mm ABOVE F.F.L.

5– ALL EXTERIOR SUPPLY DUCTS WILL BE INSULATED WITH 50 mm THICK. MINERAL FIBER AND SHALL BE COVERED WITH METAL CLADDING.

6– ALL MENTIONED HEIGHTS ARE MEASURED FROM F.F.L.

7– INSULATE ALL THE SUPPLY DUCT WITH 50mm(2") INSULATION THICKNESS, 16kg/m³ FIBERGLASS.

EQUIPMENT IDENTIFICATION

XX–XX–XX

- UNIT NUMBER
- BUILDING ABBREVIATION
- EQUIPMENT TYPE

- TURNING VANES
- DUCT EXTRACTOR
- SPLITTER DAMPER
- ACCESS DOOR

UNLESS OTHERWISE NOTED, LINEAR DIMENSIONS SHOWN ARE IN MILLIMETERS.

SYMBOL	DESCRIPTION	DATE	APP.

Designed By:
Drawn By:
Checked By:
Date: 10 MAY 2007
File No. AF0707
I.S.O. Sheet File Name: AF0707A–MH01GN.dwg
Solicitation Number: –

US Army Corps of Engineers Transatlantic Programs Center

ANA REGIONAL BRIGADE
PAKTIKA, AFGHANISTAN
DPW BUILDING
HVAC LEGEND
– –

SHEET REFERENCE NUMBER:
A–GM–01

$DATE$
$FILE$

D SIZE BORDER
32 X 20.5

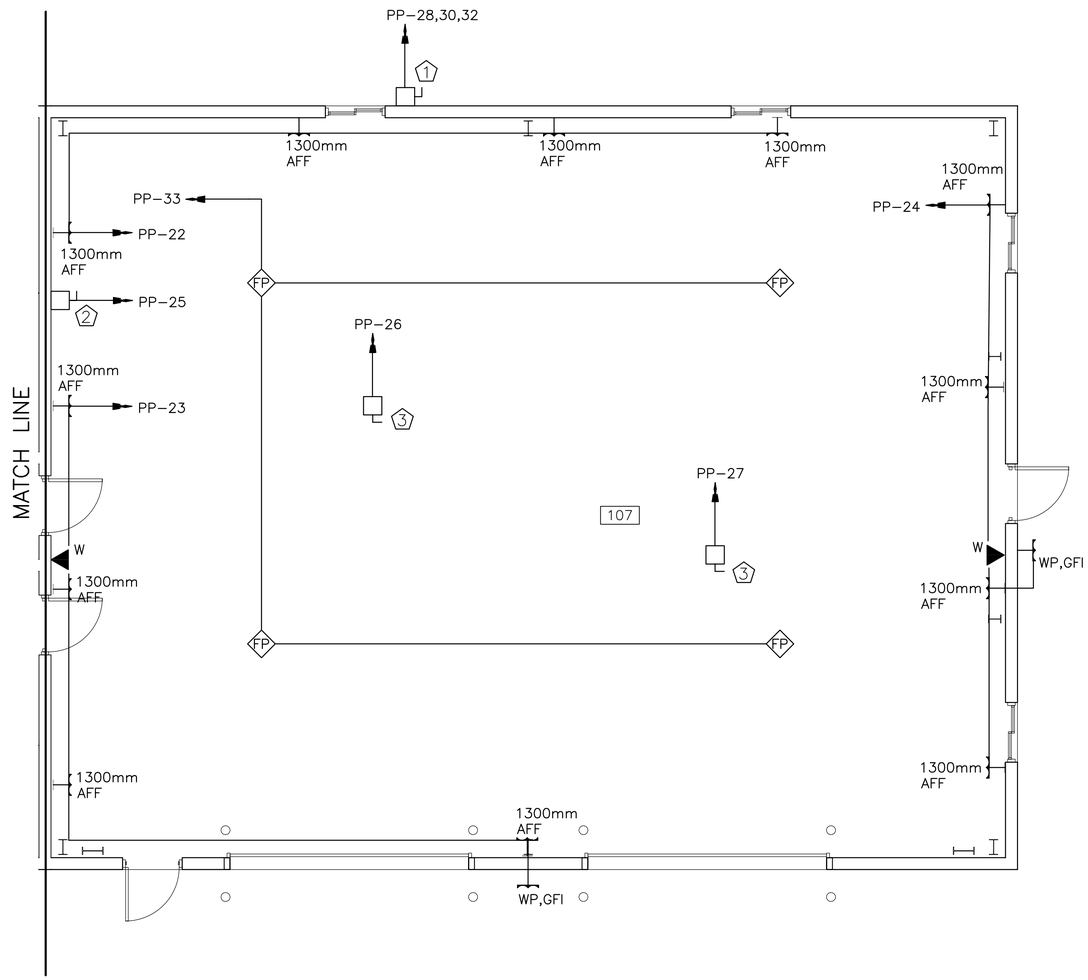

1 ELECTRICAL POWER PLAN

A-E-04 SCALE: 1:50

NOTES:

SEE A-GE-02 FOR BRANCH CIRCUITS WIRING SCHEDULE WITH CONDUIT SIZES.

1. PROVIDE 3P, 20A, 380V NONFUSED DISCONNECT IN NEMA TYPE 4X ENCLOSURE.
2. PROVIDE 1P, 40A, 220V NONFUSED DISCONNECT IN NEMA TYPE 1 ENCLOSURE.
3. PROVIDE 1P, 20A, 220V NONFUSED DISCONNECT IN NEMA TYPE 1 ENCLOSURE.

1000 0 1000mm
SCALE: 1 = 50

UNLESS OTHERWISE NOTED, LINEAR DIMENSIONS SHOWN ARE IN MILLIMETERS.

SYMBOL	DESCRIPTION	DATE	APR

Designed By:
Drawn By:
Checked By:
Date: 10 MAY 2007
File No. AF0707
I.S.O. Sheet File Name: AF0707A-EL04PN.dwg
Solicitation Number: –

US Army Corps of Engineers Transatlantic Programs Center

ANA REGIONAL BRIGADE
PAKTIKA, AFGHANISTAN
DPW BUILDING

ELECTRICAL POWER PLAN – B

SHEET REFERENCE NUMBER:
A–E–04

$DATE$
$FILE$

D SIZE BORDER
32 X 20.5

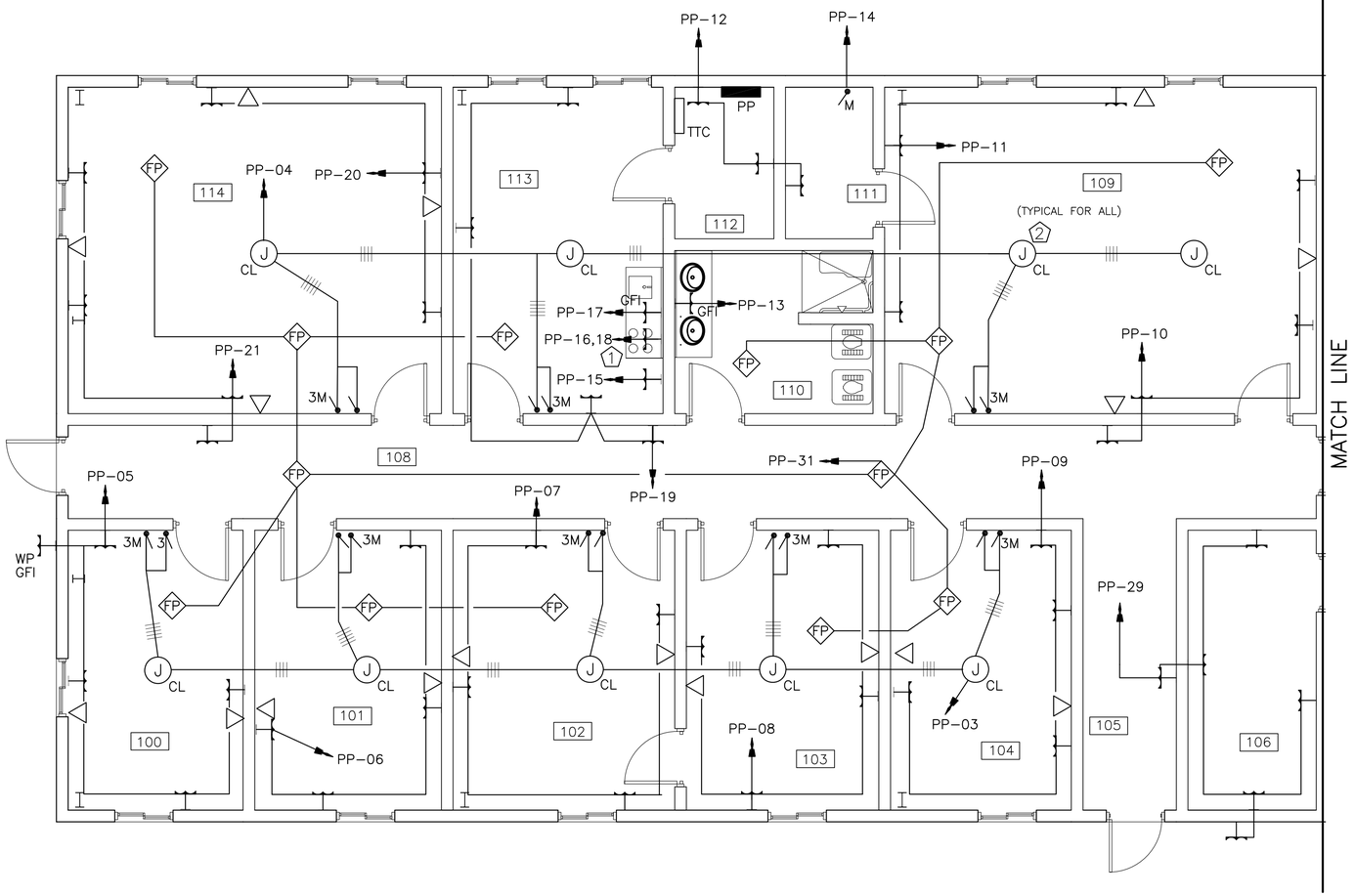

1 ELECTRICAL POWER PLAN

A-E-03 SCALE: 1:50

NOTES:

SEE A-GE-02 FOR BRANCH CIRCUITS WIRING SCHEDULE WITH CONDUIT SIZES.

1. PROVIDE 50A, 220V RANGE RECEPTACLE.
2. J-BOX FOR CEILING FAN/LIGHT FIXTURE. SEE MECHANICAL SCHEDULES AND DETAILS.

1000 0 1000mm
SCALE: 1 = 50

UNLESS OTHERWISE NOTED, LINEAR DIMENSIONS SHOWN ARE IN MILLIMETERS.

SYMBOL	DESCRIPTION	DATE	APP.

Designed By:
Drawn By:
Checked By:
Date: 10 MAY 2007
File No. AF0707
I.S.O. Sheet File Name: AF0707A-EL03PN.dwg
Solicitation Number: –

US Army Corps of Engineers Transatlantic Programs Center

ANA REGIONAL BRIGADE
PAKTIKA, AFGHANISTAN
DPW BUILDING
ELECTRICAL POWER PLAN – A

SHEET REFERENCE NUMBER:
A-E-03

$DATE$
$FILE$

D SIZE BORDER
32 X 20.5

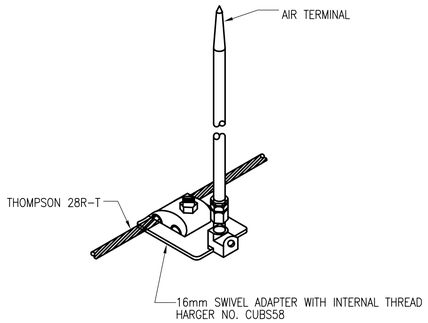

1 AIR TERMINAL MOUNTING DETAIL

SCALE: N.T.S

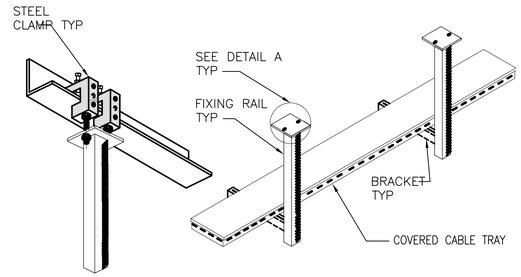

2 CABLE TRAY SUPPORT DETAIL

SCALE: N.T.S

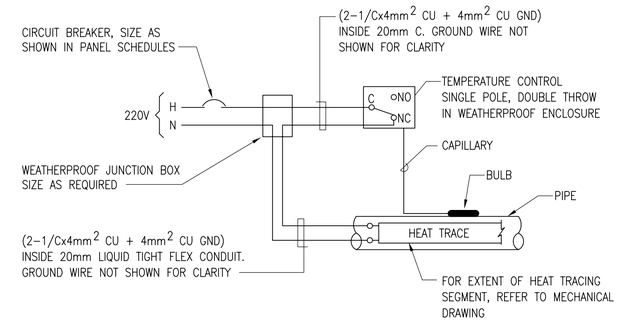

3 HEAT TRACE CONTROL DIAGRAM

SCALE: N.T.S

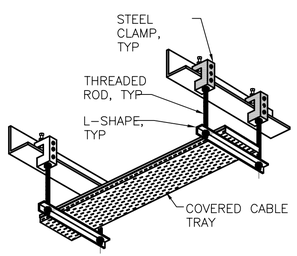

4 CABLE TRAY SUPPORT DETAIL

SCALE: N.T.S

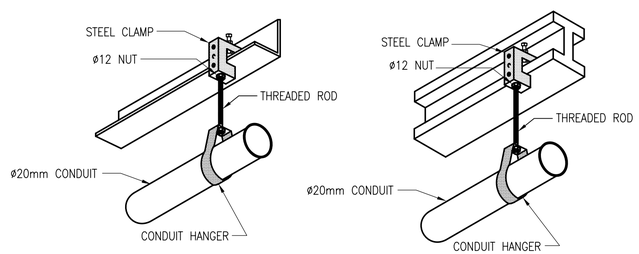

5 SUPPORT OF CONDUIT FROM STEEL STRUCTURE

SCALE: N.T.S

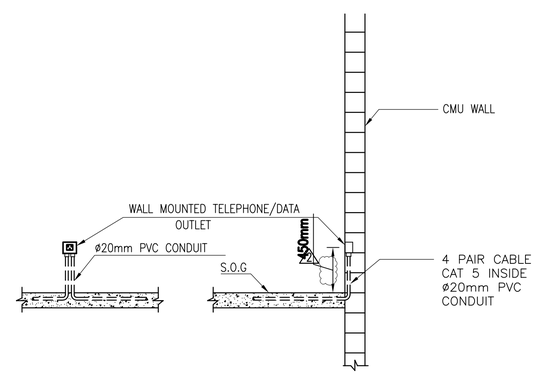

6 GENERAL INSTALLATION DETAIL FOR RECESSED TELEPHONE/ DATA OUTLET (CONDUIT EMBEDDED IN SLAB)

SCALE: N.T.S

UNLESS OTHERWISE NOTED, LINEAR DIMENSIONS SHOWN ARE IN MILLIMETERS.

SYMBOL	DESCRIPTION	DATE	APR

Designed By:
Drawn By:
Checked By:
Date: 10 MAY 2007
File No. AF0707
I.S.O. Sheet File Name: AF0707A-EL0301.dwg
Solicitation Number: –

US Army Corps of Engineers Transatlantic Programs Center

ANA REGIONAL BRIGADE
PAKTIKA, AFGHANISTAN
DPW BUILDING

ELECTRICAL DETAILS

SHEET REFERENCE NUMBER:
A-DE-03

$DATE$
$FILE$

D SIZE BORDER
32 X 20.5

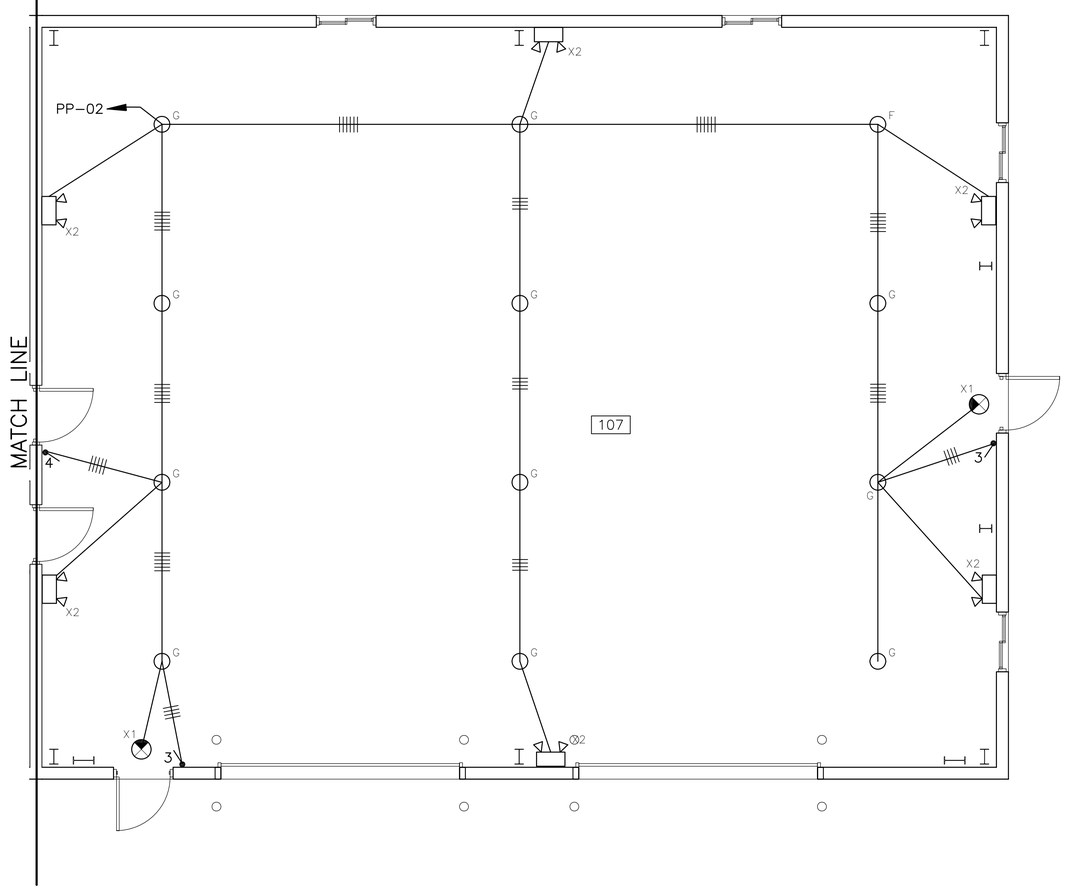

1 ELECTRICAL LIGHTING PLAN

A-E-02 SCALE: 1:50

NOTES:

ALL ROOMS WITHOUT LIGHTING FIXTURE CONTAIN A CEILING FAN WITH LIGHT FIXTURE. SEE POWER PLANS A-E-03 AND A-E-04.

1000 0 1000mm
SCALE: 1 = 50

UNLESS OTHERWISE NOTED, LINEAR DIMENSIONS SHOWN ARE IN MILLIMETERS.

SYMBOL	DESCRIPTION	DATE	APP.

Designed By:
Drawn By:
Checked By:
Date: 10 MAY 2007
File No. AF0707
I.S.O. Sheet File Name: AF0707A-EL02PN.dwg
Solicitation Number: –

US Army Corps of Engineers Transatlantic Programs Center

ANA REGIONAL BRIGADE
PAKTIKA, AFGHANISTAN
DPW BUILDING
ELECTRICAL LIGHTING PLAN – B

SHEET REFERENCE NUMBER:
A–E–02

$DATE$
$FILE$

D SIZE BORDER
32 X 20.5

LIGHTING FIXTURE SCHEDULE

TYPE	DESCRIPTION	NO. OF LAMPS	LAMP TYPE	WATTS PER LAMP	VOLTAGE	MOUNTING
A	PENDANT MOUNTED INDUSTRIAL FLUORESCENT LIGHT FIXTURE WITH WIDE DISTRIBUTION REFLECTOR KIT	2	T8	36	220/50HZ	PENDANT
A1	SURFACE MOUNTED INDUSTRIAL FLUORESCENT LIGHT FIXTURE WITH WIDE DISTRIBUTION REFLECTOR KIT	2	T8	36	220/50HZ	SURFACE
B	SURFACE/PENDANT MOUNTED PRISTMIC REFLECTOR	2	T8	36	220/50HZ	SURFACE/PENDENT
B1	SURFACE MOUNTED VIRTUALLY UNBREAKABLE DIFFUSER, SOLID STEEL BODY AND FRAME, HIGH SECURITY STAINLESS BOLTS	2	T8	36	220/50HZ	SURFACE/PENDENT
C	PENDANT MOUNTED FLUORESCENT LIGHT FIXTURE WITH REFLECTOR AND ACRYLIC LENS	4	T8	36	220/50HZ	PENDANT
C1	SURFACE MOUNTED FLUORESCENT LIGHT FIXTURE WITH REFLECTOR AND ACRYLIC LENS	4	T8	36	220/50HZ	SURFACE
D	SURFACE/PENDANT MOUNTED FIXTURE SPECIAL FOR WET LOCATION	2	T8	40	220/50HZ	SURFACE
E	SURFACE/WALL MOUNTED FIXTURE SPECIAL FOR WET LOCATION	2	T8	36	220/50HZ	SURFACE OR WALL
F	WALL MOUNTED COMPACT FLUOR.	1	CF	26	220/50HZ	WALL
G	PENDANT MOUNTED INDUSTRIAL LOW BAY FIXTURE	1	HPS	150	220/50HZ	PENDANT
G1	PENDANT MOUNTED INDUSTRIAL HIGH BAY FIXTURE	1	HPS	150	220/50HZ	PENDANT
G2	PENDANT MOUNTED INDUSTRIAL LOW BAY FIXTURE	1	HPS	250	220/50HZ	PENDANT
J	EXPLOSION PROOF SURFACE MOUNTED FLUOR. FIXTURE	2	INCLUDED	36	220/50HZ	SURFACE
X1	EXIT SIGN WITH DIRECTIONAL ARROWS AS REQUIRED	2	INCLUDED	8	220/50HZ	UNIVERSAL
X2	EMERGENCY FIXTURE WITH HALOGEN LAMPS	2	HALOGEN	20	220/50HZ	WALL/SURFACE
X3	EXPLOSION PROOF EMERGENCY FIXTURE WITH HALOGEN LAMPS	2	HALOGEN	14	220/50HZ	WALL/SURFACE

BRANCH CIRCUITS WIRE SCHEDULE

220 VOLT 1ø, 3W. CIRCUITS

CIRCUIT BREAKER	CONDUCTOR
20A–1P	2 #4mm² & 1 #4mm² GND. – 20mm C.
30A–1P	2 #6mm² & 1 #6mm² GND. – 20mm C.
40A–1P	2 #10mm² & 1 #6mm² GND. – 20mm C.
50A–1P	2 #16mm² & 1 #6mm² GND. – 25mm C.
60A–1P	2 #25mm² & 1 #10mm² GND. – 25mm C.
80A–1P	2 #35mm² & 1 #10mm² GND. – 25mm C.
100A–1P	2 #50mm² & 1 #10mm² GND. – 32mm C.

380 VOLT, 3ø, 4W. CIRCUITS

20A–3P	3 #4mm² & 1 #4mm² GND. – 20mm C.
30A–3P	3 #6mm² & 1 #6mm² GND. – 20mm C.
40A–3P	3 #10mm² & 1 #6mm² GND. – 20mm C.
50A–3P	3 #16mm² & 1 #6mm² GND. – 38mm C.
60A–3P	3 #25mm² & 1 #10mm² GND. – 38mm C.
80A–3P	3 #35mm² & 1 #10mm² GND.–38mmC.
100A–3P	3 #50mm² & 1 #10mm² GND.–40mmC.

380 VOLT, 3ø,5W. CIRCUITS

20A–3P	4 #4mm² & 1 #4mm² GND. – 20mm C.
30A–3P	4 #6mm² & 1 #6mm² GND. – 20mm C.
40A–3P	4 #10mm² & 1 #6mm² GND. – 32mm C.
50A–3P	4 #16mm² & 1 #6mm² GND. – 38mm C.
60A–3P	4 #25mm² & 1 #10mm² GND. – 38mm C.

NOTE:

1. TYPE MC CABLE SHALL INCLUDE FULL SIZE INSULATED GROUND CONDUCTOR. SIZES AS INDICATED IN SCHEDULE.

UNLESS OTHERWISE NOTED, LINEAR DIMENSIONS SHOWN ARE IN MILLIMETERS.

SYMBOL	DESCRIPTION	DATE	APP.

Designed By:
Drawn By:
Checked By:
Date: 10 MAY 2007
File No. AF0707
I.S.O. Sheet File Name: AF0707A–EL02GN.dwg
Solicitation Number: –

US Army Corps of Engineers Transatlantic Programs Center

ANA REGIONAL BRIGADE
PAKTIKA, AFGHANISTAN
DPW BUILDING

ELECTRICAL
FIXTURE SCHEDULE
AND BRANCH CIRCUIT

SHEET REFERENCE NUMBER:
A–GE–02

$DATE$
$FILE$

D SIZE BORDER
32 X 20.5

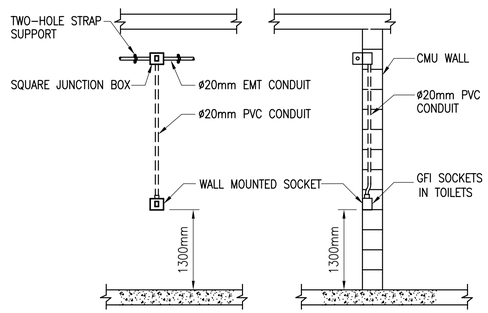

1 GENERAL INSTALLATION DETAIL FOR RECESSED SURFACE MOUNTED SOCKET IN TOILETS

SCALE: N.T.S

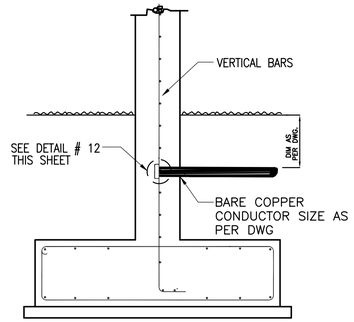

2 TYPICAL STRUCTURAL BONDING DETAIL

SCALE: N.T.S

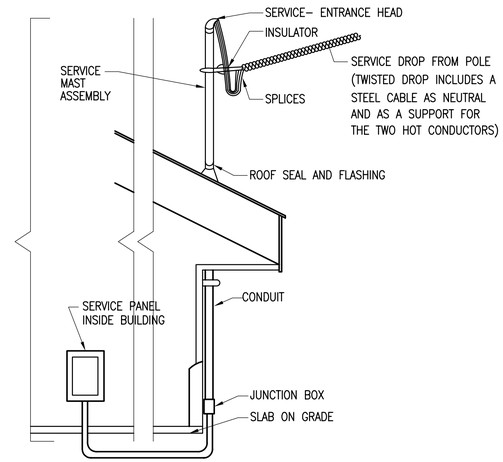

3 PANEL BOARD FEEDING FROM BOTTOM (FOR PANELS NOT IN EXTERIOR WALL)

SCALE: N.T.S.

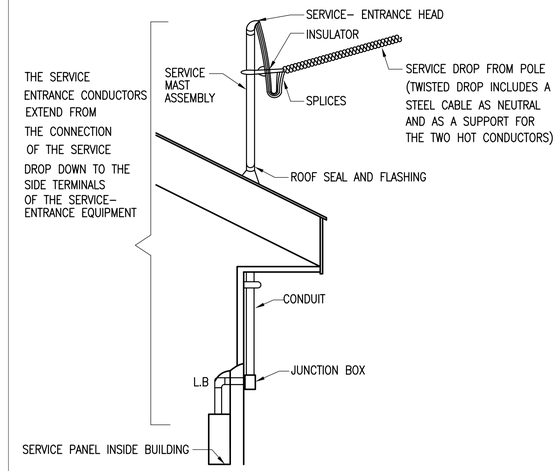

4 PANEL BOARD FEEDING FROM TOP (FOR PANELS ON EXTERLOR WALL)

SCALE: N.T.S.

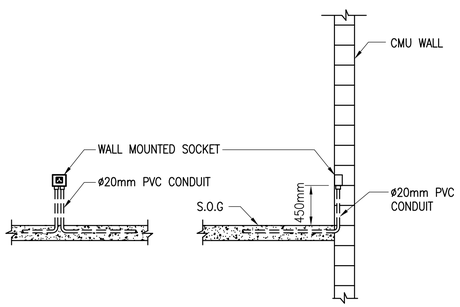

5 GENERAL INSTALLATION DETAIL FOR RECESSED SOCKET (CONDUIT EMBEDDED IN SLAB)

SCALE: N.T.S

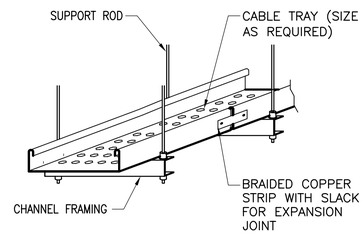

6 CABLE TRAY CROSSING EXPANSION JOINT

SCALE: N.T.S

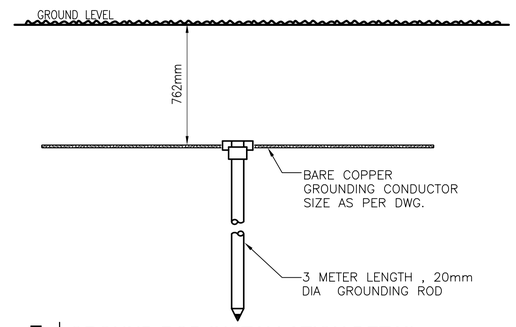

7 GROUND ROD INSTALLATION DETAIL

SCALE: N.T.S

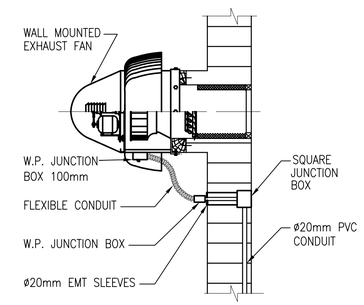

8 GENERAL INSTALLATION DETAIL FOR EXHAUST FAN (CONDUIT EMBEDDED)

SCALE: N.T.S

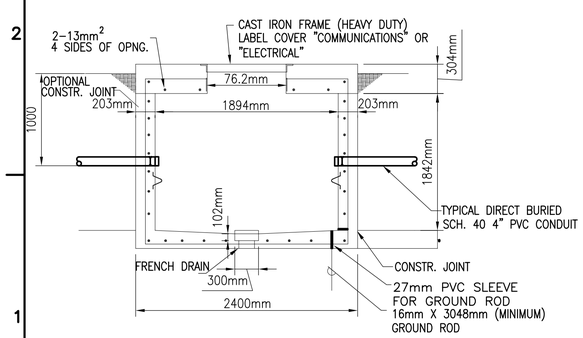

9 MANHOLE DETAIL (2400x2400mm)

SCALE: N.T.S.

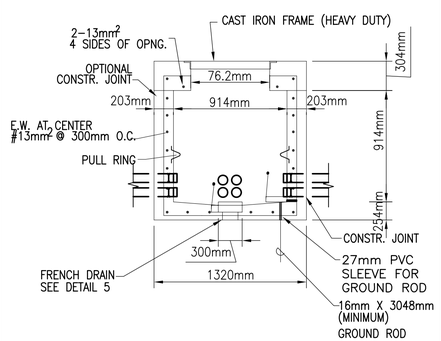

10 HAND HOLE DETAIL (1320x1320mm)

SCALE: N.T.S.

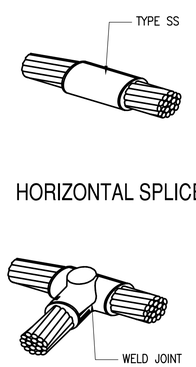

11 T-CONNECTION WELDING POINT

SCALE: N.T.S.

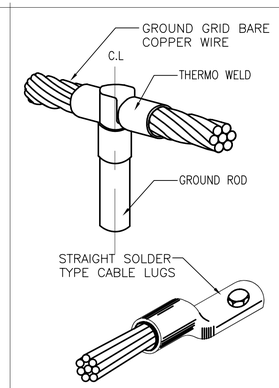

12 GROUNDING CABLE LUGS

SCALE: N.T.S.

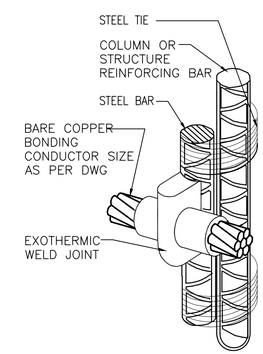

13 WELDING TO STEEL REINFORCING BAR

SCALE: N.T.S.

UNLESS OTHERWISE NOTED, LINEAR DIMENSIONS SHOWN ARE IN MILLIMETERS.

SYMBOL	DESCRIPTION	DATE	APP.

Designed By:
Drawn By:
Checked By:

Date: 10 MAY 2007
File No. AF0707
I.S.O. Sheet File Name: AF0707A–EL02D1.dwg
Solicitation Number: –

US Army Corps of Engineers Transatlantic Programs Center

ANA REGIONAL BRIGADE
PAKTIKA, AFGHANISTAN
DPW BUILDING

ELECTRICAL DETAILS

SHEET REFERENCE NUMBER:
A–DE–02

$DATE$
$FILE$

D SIZE BORDER
32 X 20.5

PANEL "PP" SCHEDULE

100 AMPS MAIN CIRCUIT BREAKER 380DELTA/220 VOLTS 3 PHASE 5 WIRE 10,000 AIC

MOUNTING: SURFACE

NO	DESCRIPTION	BKR/P	VA A		VA B		VA C		BKR/P	DESCRIPTION	NO
1	LIGHTS - BUILDING INTERIOR	20/1	840	1920					20/1	LIGHTS - SHOP AREA	2
3	LIGHTS/FANS - 100-104	20/1			500	400			20/1	LIGHTS/FANS - 109,113, & 114	4
5	RECEPS - 100,108, & EXTERIOR	20/1					1650	1320	20/1	RECEPS - 101	6
7	RECEPS - 102	20/1	1320	1320					20/1	RECEPS - 103	8
9	RECEPS - 104	20/1			1650	1320			20/1	RECEPS - 108 & 109	10
11	RECEPS - 109	20/1					990	2500	20/1	RECEPS - 111 &112	12
13	RECEPS - 110	20/1	330	220					20/1	EXHAUST FAN - 111	14
15	RECEPS - 114 (REFRIGERATOR)	20/1			1500	4000			50/2	RANGE - 114	16
17	RECEPS - 114 (COUNTERTOP)	20/1					330	4000			18
19	RECEPS - 109 & 113	20/1	1320	990					20/1	RECEPS - 114	20
21	RECEPS - 114 & 108	20/1			1320	1320			20/1	RECEPS - 107	22
23	RECEPS - 107	20/1					1320	1650	20/1	RECEPS - 107 & EXTERIOR	24
25	WATER HEATER - 107	20/1	6000	2640					20/1	EXHAUST FAN - 107	26
27	EXHAUST FAN - 107	20/1			2640	3000			20/3	DIESEL HEAT/EVAPORATION UNIT	28
29	RECEPS - 105,106, & EXTERIOR	20/1					1980	3000			30
31	FIRE DETECTION - ADMIN	20/1	1320	3000							32
33	FIRE DETECTION - SHOP	20/1			440				20/1	SPARE	34
35	SPARE	20/1							20/1	SPARE	36
37	SPARE	20/1							20/1	SPARE	38
39	SPARE	20/1							20/1	SPARE	40
41	SPARE	20/1							20/1	SPARE	42
		TOTAL	21220		18090		18740				

CONNECTED KVA:	58.05 KVA
CONNECTED AMPS	88.198 AMPS

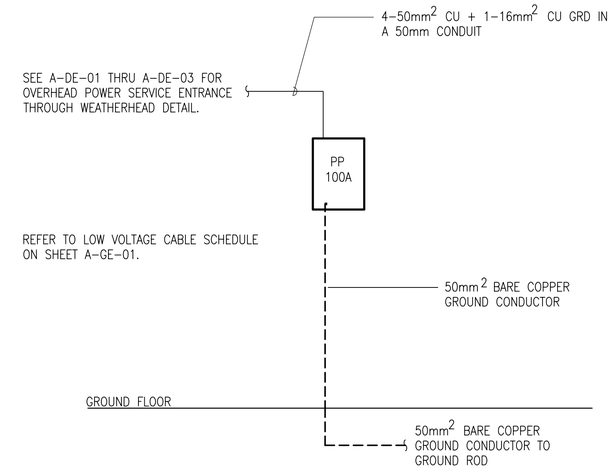

1 POWER RISER DIAGRAM
A-SE-01 SCALE: N.T.S.

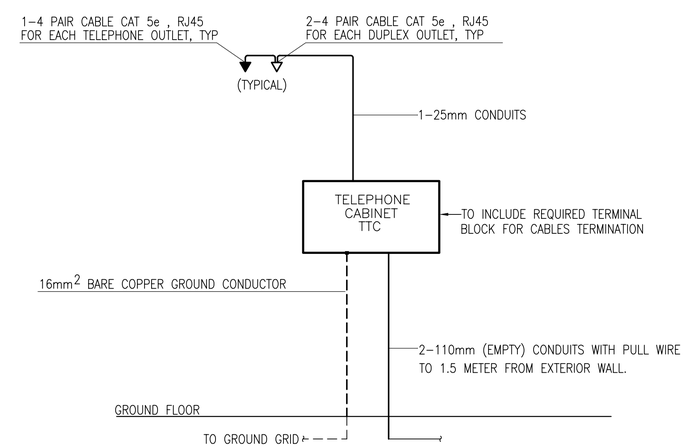

2 TELEPHONE RISER DIAGRAM
A-SE-01 SCALE: N.T.S.

UNLESS OTHERWISE NOTED, LINEAR DIMENSIONS SHOWN ARE IN MILLIMETERS.

SYMBOL	DESCRIPTION	DATE	APR

Designed By:
Drawn By:
Checked By:
Date: 10 MAY 2007
File No. AF0707
I.S.O. Sheet File Name: AF0707A-EL01SC.dwg
Solicitation Number: –

US Army Corps of Engineers Transatlantic Programs Center

ANA REGIONAL BRIGADE
PAKTIKA, AFGHANISTAN
DPW BUILDING
ELECTRICAL
PANEL SCHEDULES & RISERS

SHEET REFERENCE NUMBER:
A-SE-01

$DATE$
$FILE$

D SIZE BORDER
32 X 20.5

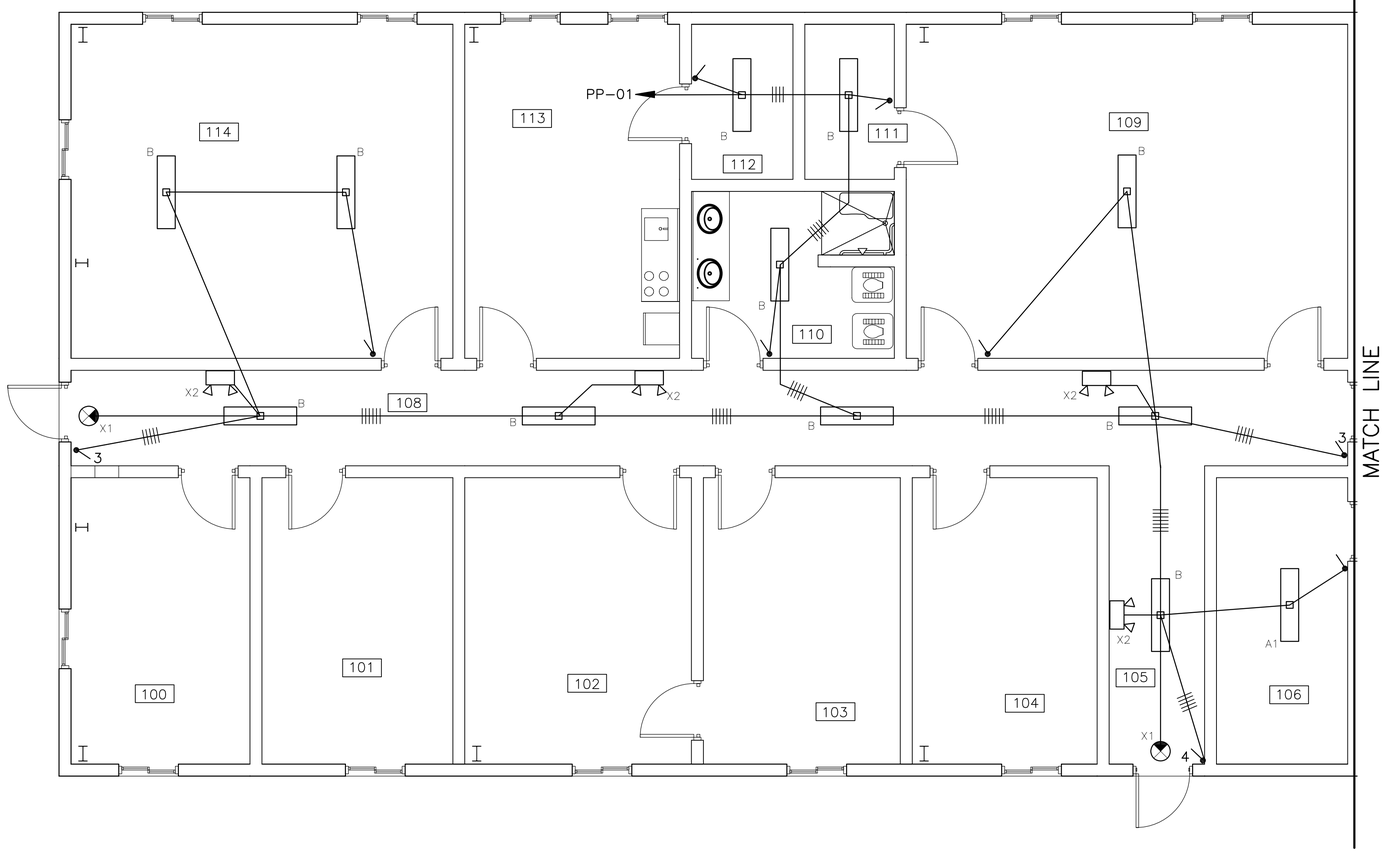

1 ELECTRICAL LIGHTING PLAN

A-E-01 SCALE: 1:50

NOTES:

ALL ROOMS WITHOUT LIGHTING FIXTURE CONTAIN A CEILING FAN WITH LIGHT FIXTURE. SEE POWER PLANS A-E-03 AND A-E-04.

1000 0 1000mm
SCALE: 1 = 50

UNLESS OTHERWISE NOTED, LINEAR DIMENSIONS SHOWN ARE IN MILLIMETERS.

SYMBOL	DESCRIPTION	DATE	APP.

Designed By:
Drawn By:
Checked By:
Date: 10 MAY 2007
File No. AF0707
I.S.O. Sheet File Name: AF0707A-EL01PN.dwg
Solicitation Number: –

US Army Corps of Engineers Transatlantic Programs Center

ANA REGIONAL BRIGADE
PAKTIKA, AFGHANISTAN
DPW BUILDING
ELECTRICAL LIGHTING PLAN – A

SHEET REFERENCE NUMBER:
A-E-01

$DATE$
$FILE$

D SIZE BORDER
32 X 20.5

LIGHTING LEGEND:

	ONE LAMP FLUORESCENT L.F.
	TWO LAMPS FLUORESCENT L.F.
	FOUR LAMPS FLUORESCENT L.F.
	FLOOD LIGHT, WALL MOUNTED
	6 METER, LIGHTING POLE WITH FLOOD LIGHT
	MIRROR WALL MOUNTED LIGHT FIXTURE
	WALL MOUNTED FIXTURE
	PENDANT MOUNTED INDUSTRIAL, LOW/HIGH BAY L.F.
X1	SURFACE (WALL/CELING)ONE FACE EXIT SIGN WITH BACK UP BATTERY.
X2	WALL MOUNTED EMERGENCY LIGHT WITH BACK UP BATTERY.
D	DIMMING SWITCH, 220V, 16AMP MOUNTED HEIGHT = 1300mm ABOVE FINISH FLOOR LEVEL FROM THE CENTER OF SWITCH
	ONE WAY SWITCH, 220V, 16AMP MOUNTED HEIGHT = 1300mm ABOVE FINISH FLOOR LEVEL FROM THE CENTER OF SWITCH
3	3 WAY SWITCH, 220V, 16AMP MOUNTED HEIGHT = 1300mm ABOVE FINISH FLOOR LEVEL FROM THE CENTER OF SWITCH
4	4 WAY SWITCH, 220V, 16AMP MOUNTED HEIGHT = 1300mm ABOVE FINISH FLOOR LEVEL FROM THE CENTER OF SWITCH

LOW CURRENT LEGEND:

TTC	TELEPHONE TERMINAL CABINET, SEE NOTE 3
	EQUIPMENT AS IDENTIFIED ON PLANS
	TELPHONE/DATA OUTLET DUPLEX, RJ-45, 4 PAIR CATEGORY 5E, SEE NOTE 2 & 5
FP	FIRE ALARM BOX FOR FUTURE INSTALLATION OF SELF SMOKE DETECTOR. LOCATE BOX A MIN. OF 1.0M FROM TIP OF FAN BLADE.
	TELEPHONE OUTLET ,RJ-45,4 PAIR CATEGORY 5E, SEE NOTE #2, 5

GROUNDING LEGEND:

	3 METER LENGTH, 0.02m DIAMETER , COPPER GROUNDING ROD
	UNDERGROUND BARE COPPER CONDUCTOR FOR CONNECTION BETWEEN GROUNDING RODS SIZE AS INDICATED ON THE PLAN
T	T-SPLICE EXOTHERMIC WELD
	AIR TERMINAL

POWER LEGEND:

	ELECTRICAL PANEL BOARD, SEE NOTE 4
MDP	MAIN DISTRIBUTION PANEL (MDP)
	NON FUSED DISCONNECT SWITCH ,220V ,50HZ ,20A (U.O.N)
	COMBINATION MOTOR STARTER SWITCH ,220V ,50HZ ,20A (U.O.N)
M	MANUAL MOTOR STARTER, WITH OVER LOAD PROTECTION RATING AS REQUIRED BY EXHAUST FAN MANUFACTURER MOUNTED HEIGHT = 1300mm ABOVE FINISH FLOOR LEVEL
3M	MOTOR RATED 3-SPEED SWITCH FOR CEILING FAN, 220V, 20AMP MOUNTED HEIGHT = 1300mm ABOVE FINISH FLOOR LEVEL
	RECESSED MOUNTED DUPLEX RECEPTACLES 1PH, 240V, 16A, 50HZ GROUNDING DIN TYPE. MOUNTING HEIGHT = 450mm ABOVE FINISH FLOOR LEVEL
GFI	RECESSED MOUNTED SINGLE RECEPTACLES 1PH, 240V, 16A, 50HZ GROUNDING DIN TYPE WITH GROUND FAULT INTERRUPTER AND SWITCH. MOUNTING HEIGHT =1300mm ABOVE FINISH FLOOR
CEE	RECESSED MOUNTED DUPLEX RECEPTACLES 3PH, 380V, 30A, 50HZ GROUNDING DIN TYPE MOUNTING HEIGHT =450mm ABOVE FINISH FLOOR
G	RECESSED MOUNTED DUPLEX RECEPTACLE LABEL INDICATE (HOSPITAL GRAD) 1PH, 240V, 16A, 50HZ GROUNDING DIN TYPE . MOUNTING HEIGHT =500mm ABOVE FINISH FLOOR INSULATED 4mm GROUNDING WIRE PER EACH RECEPTACLE
	SINGLE POWER SOCKET OUTLET, 220V, 50HZ, 20A MOUNTING HEIGHT = 450mm (U.O.N.)
PB	100mm x 100mm PULL BOX.
J	100mm x 100mm JUNCTION BOX
J CL	JUNCTION BOX FOR CEILING FAN WITH LIGHTS, SEE MECH STD. DETAILS
C.B	CIRCUIT BREAKER 30 AMP , 3 POLE , 380V , 50HZ
M	MOTORIZE DAMPER
REL	RELAY PANEL
M	MOTOR
H	HEATER
B XX-E-01	DETAIL DESIGNATION, TOP NUMBER INDICATE DETAIL NUMBER, BOTTOM LETTER INDICATES SHEET REF. NUMBER.

LIGHT FIXTURE NOTES:

1. ALL PENDANT MOUNTED FIXTURES ARE TO INCLUDE MANUFACTURERS "BALL-HANGER" TYPE CANOPY TO COMPENSATE FOR ROOF PITCH. FIELD CUT TO LENGTH.
2. ALL LIGHTING FIXTURES TO BE PROVIDED WITH "STANDARD" HIGH POWER FACTOR "ELECTRONIC" BALLASTS, UNLESS NOTED OTHERWISE.

LINE TYPE:

- - - - - - -	EXPOSED CONDUIT
————————	EMBEDDED OR CONCEALED CONDUIT
- - - -|- - - -	LIGHTNING PROTECTION CONDUCTOR

ABBREVIATIONS:

A	AMP
A.H.U.	AIR HANDLING UNIT
A/C	AIR CONDITIONING
A.C.U.	AIR CONDITION UNIT
A.F.F.	ABOVE FINNISH FLOOR LEVEL
C	CONDUIT
CB	CIRCUIT BREAKER
CHH	COMMUNICATION HANDHOLE
C.L.	CENTERLINE
C.O.E.	CORE OF ENGINEERS
CU	CONDENSING UNIT
ø, DIA	DIAMETER
EF	EXHAUST FAN
EHH	ELECTRICAL HANDHOLE
EMT	ELECTRIC METALLIC TUBING
EWH	ELECTRICAL WATER HEATER
FACP	FIRE ALARM CONTROL PANEL
GFI	GROUND FAULT INTERRUPTER
GRS	GALVANIZED RIGID STEEL
HZ	HERTZ
IR	IMPULSE RELAY
IL	INVERTED LEVEL
UTP	UNSHIELDED TWISTED PAIR
N.F.D.S	NON FUSED DISCONNECT SWITCH
L.C.	LIGHTING CONTACTOR
L.F.	LIGHT FIXTURE
LPI	LIGHTNING PROTECTION INSTITUTE
M	METER
MAX	MAXIMUM
MD	MOTORIZE DAMPER
MECH	MECHANICAL
MLO	MAIN LUGS ONLY
mm	MILLIMETER
P.A.C.U.	PACKAGE AIR CONDITION UNIT
PVC	POLYVINYL CHLORIDE
RM	ROOM
SF	SUPPLY FAN
S.U.	SPLIT UNIT
TRANS	TRANSFORMER
TTC	TELEPHONE TERMINAL CABINET
TYP	TYPICAL
TV	TELEVISION
U.O.N.	UNLESS OTHERWISE NOTED
V	VOLT
W	WATT
WP	WEATHER PROOF
WR	WELDING RECEPTACLE
RP	RECALCULATION PUMP

GENERAL NOTES:

1. MOUNTING HEIGHT OF SWITCHES 1.3M AFF UNLESS OTHERWISE NOTED.
2. MOUNT RECEPTACLES AND TELPHONE/DATA OUTLETS 450mm AFF UNLESS OTHERWISE NOTED. W=MOUNT 1.4M AFF.
3. MOUNT TELEPHONE TERMINAL CABINET (TTC) 1800mm FROM THE TOP OF CABINET TO FLOOR.
4. MOUNT ELECTRICAL PANELS 1800mm A.F.F. TO THE TOP OF THE PANEL.
5. TELEPHONE/DATA CABLE SHALL BE CAT 5E, 4 PAIRS
6. FOR EXACT LOCATION OF MECHANICAL EQUIPMENT REFER TO MECHANICAL DESIGN DRAWINGS.
7. EQUIPMENT SHALL BE RATED FOR 40 DEGREES C AND 2000 METERS (ABOVE SEA LEVEL) ELEVATION
8. THE GROUNDING RESISTANCE SHALL BE NO HIGHER THAN 25 OHMS , EXCEPT IN THE UPS AND EQUIPMENT ROOM SHALL BE 5 OHMS MEASURED MIN OF 48 HRS AFTER RAINFALL, ADDITIONAL RODS SHOULD BE USED TO ACHIEAVED THE REQUIRED RESISTANCE
9. ALL LIGHT FIXTURES SHALL BE SEISMICALLY BRACED.
10. ALL PANEL BOARD AIC RATINGS AS SHOWN ON SCHEDULES.
11. THE ELECTRICAL WIRING SHOWN ON PLAN DRAWINGS IS DIAGRAMMATIC AND INTENDED TO IDENTIFY THE CIRCUIT ARRANGEMENT FOR EACH AREA. THE CONDUIT CAN BE COMBINED FOR DIFFERENT CIRCUITS, PROVIDED THE INSTALLATION MEETS THE NEC, WITH NO MORE THAN 3 CONNECTIVE CIRCUITS IN ANY CONDUIT, SUCH AS 1, 3, 5 OR 2, 4, 6, ETC. THE 3 CIRCUITS CAN SHARE ONE NEUTRAL CONDUCTOR.

UNLESS OTHERWISE NOTED, LINEAR DIMENSIONS SHOWN ARE IN MILLIMETERS.

SYMBOL	DESCRIPTION	DATE	APP.

Designed By:
Date: 10 MAY 2007
Drawn By:
File No. AF0707
Checked By:
I.S.O. Sheet File Name: AF0707A-EL01GN.dwg
Solicitation Number: –

US Army Corps of Engineers Transatlantic Programs Center

ANA REGIONAL BRIGADE
PAKTIKA, AFGHANISTAN
DPW BUILDING

ELECTRICAL
LEGEND AND NOTES

SHEET REFERENCE NUMBER:
A-GE-01

$DATE$
$FILE$

D SIZE BORDER
32 X 20.5

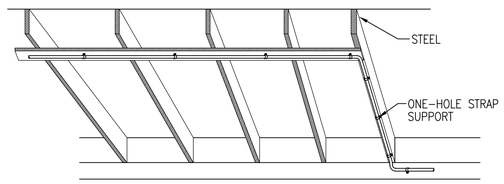

1 SURFACE MOUNTED CONDUIT SUPPORT

SCALE: N.T.S

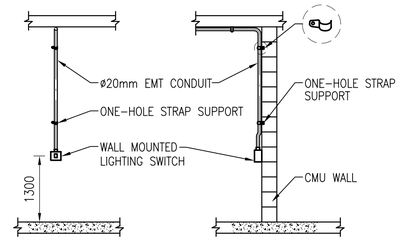

NOTE:-
WALL MOUNTED LIGHTING OUTLETS SHOULD BE CENTRAL ON A BLOCK, NOT BETWEEN TWO BLOCKS.

2 GENERAL INSTALLATION DETAIL FOR LIGHTING SWITCH (CONDUIT EXPOSED)

SCALE: N.T.S

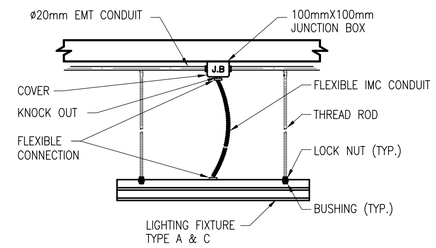

3 PENDANT LIGHT FIXTURE DETAIL (NOT USED)

SCALE: N.T.S

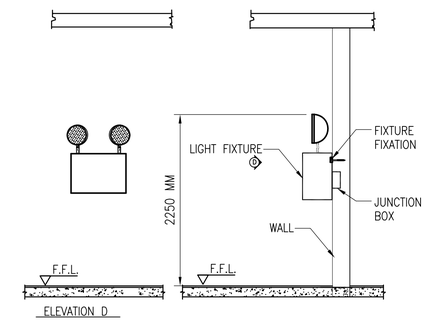

4 SURFACE EMERGENCY LIGHT FIXTURE DETAIL

SCALE: N.T.S

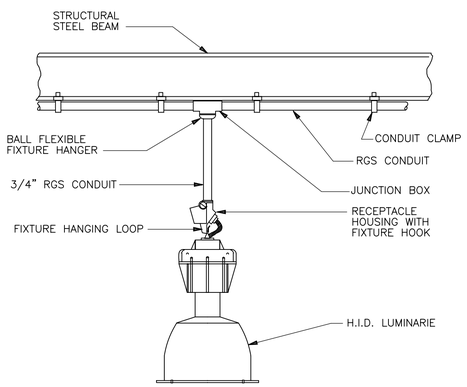

5 H.I.D. LUMINARIE PENDANT MOUNTED

SCALE: N.T.S

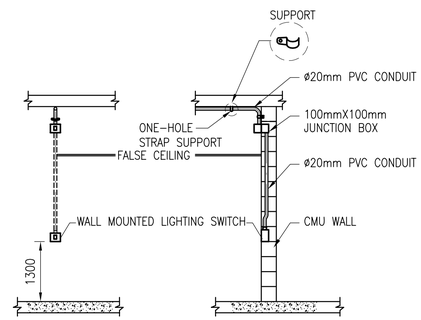

6 GENERAL INSTALLATION DETAIL FOR LIGHT SWITCH (CONDUIT CONCEALED)

SCALE: N.T.S

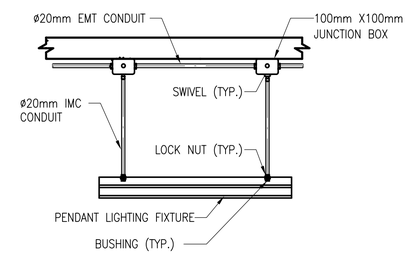

7 INSTALLATION OF LIGHTING FIXTURE IN SEISMIC BUILDING

SCALE: N.T.S

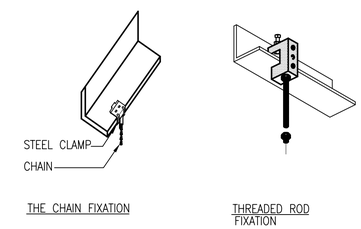

8 GENERAL SUPPORT DETAIL

SCALE: N.T.S

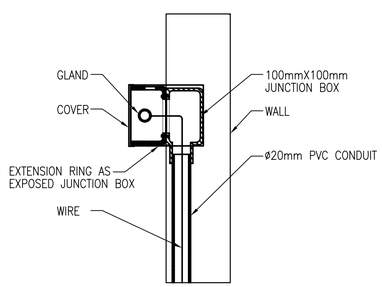

9 CONVERTING FROM EXPOSED TO EMBEDDED ROUTING IN WALL

SCALE: N.T.S

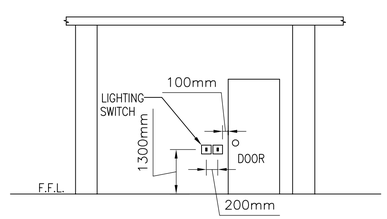

NOTE:-
THE LOCATION OF THE CONDUIT FEEDING THE FIRST SWITCH TO BE 100mm FROM THE DOOR OPENING

10 LIGHT SWITCH MOUNTING

SCALE: N.T.S

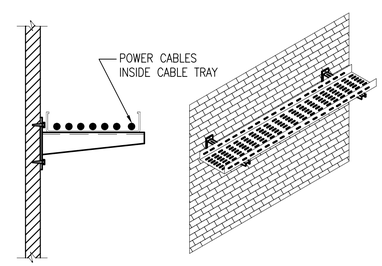

11 GENERAL INSTALLATION DETAIL FOR WALL MOUNTED CABLE TRAY

SCALE: N.T.S

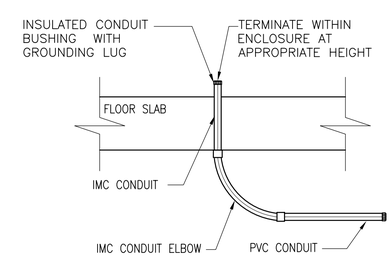

12 TYPICAL CONDUIT STUB-UP THROUGH FLOOR SLAB FOR FEEDING EQUIPMENT

SCALE: N.T.S

UNLESS OTHERWISE NOTED, LINEAR DIMENSIONS SHOWN ARE IN MILLIMETERS.

SYMBOL	DESCRIPTION	DATE	APP.

Designed By:
Date: 10 MAY 2007
Drawn By:
File No. AF0707
Checked By:
I.S.O. Sheet File Name: AF0707A-EL01D1.dwg
Solicitation Number: –

US Army Corps of Engineers Transatlantic Programs Center

ANA REGIONAL BRIGADE
PAKTIKA, AFGHANISTAN
DPW BUILDING

ELECTRICAL DETAILS

SHEET REFERENCE NUMBER:
A–DE–01

$DATE$
$FILE$

D SIZE BORDER
32 X 20.5

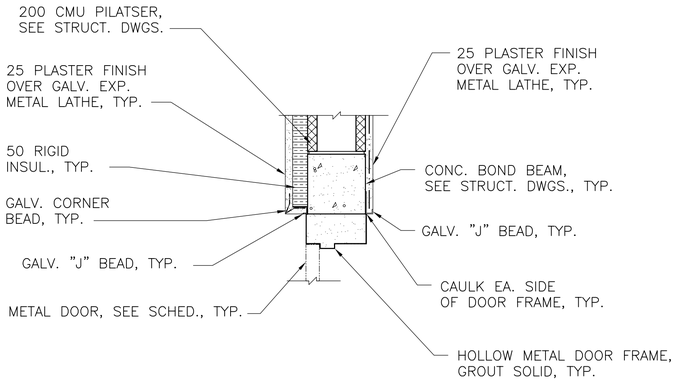

1 DETAIL - EXTERIOR DOOR HEAD

A-A-01 REF. SCALE: 1:10

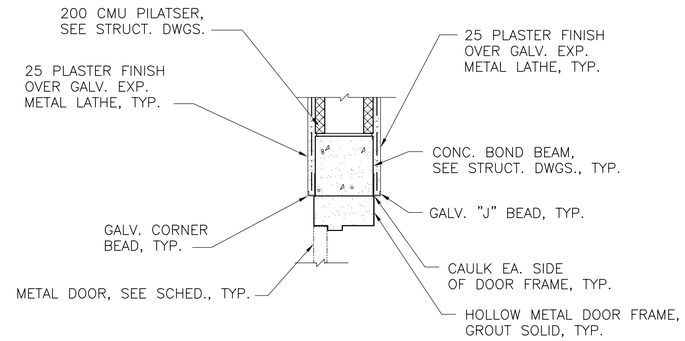

4 DETAIL - INTERIOR DOOR HEAD

A-A-01 REF. SCALE: 1:10

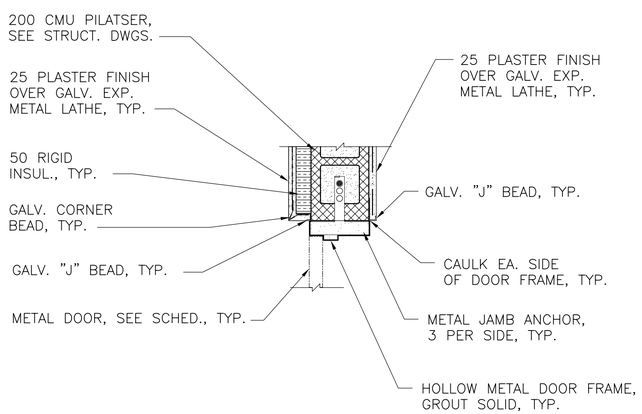

2 DETAIL - EXTERIOR DOOR JAMB

A-A-01 REF. SCALE: 1:10

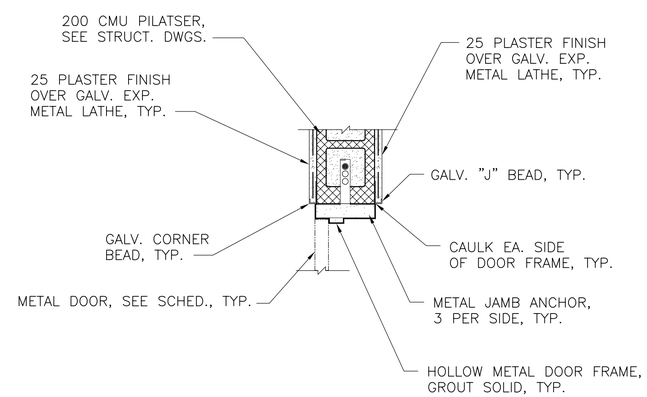

5 DETAIL - INTERIOR DOOR JAMB

A-A-01 REF. SCALE: 1:10

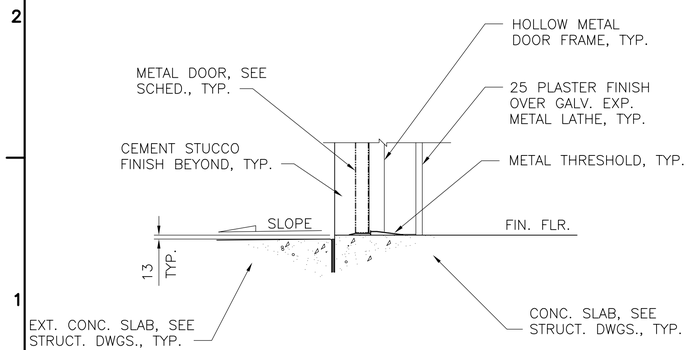

3 DETAIL - EXTERIOR DOOR SILL

A-A-01 REF. SCALE: 1:10

GRAPHIC SCALE:

200 0 200mm
SCALE: 1 = 10

UNLESS OTHERWISE NOTED, LINEAR DIMENSIONS SHOWN ARE IN MILLIMETERS.

SYMBOL	DESCRIPTION	DATE	APP.

Designed By: T. WALLACE
Drawn By: T. WALLACE
Checked By: R. BROWN
Date: 10 MAY 2007
File No. AF0707
I.S.O. Sheet File Name: AF0707A-AR12DT.dwg
Solicitation Number: –
B. THOMAS

US Army Corps of Engineers Transatlantic Programs Center

ANA REGIONAL BRIGADE
PAKTIKA, AFGHANISTAN
DPW BUILDING

DOOR DETAILS

SHEET REFERENCE NUMBER:
A-A-12

$DATE$
$FILE$

D SIZE BORDER
32 X 20.5

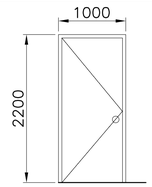

1 DOOR (D1)
SCALE: 1:40

1A DOOR (D1A) 20–MIN. FIRE RATED
SCALE: 1:40

1B DOOR (D1B) 45–MIN. FIRE RATED
SCALE: 1:40

1C DOOR (D1C) INSULATED
SCALE: 1:40

1D DOOR (D1D) 90–MIN. FIRE RATED
SCALE: 1:40

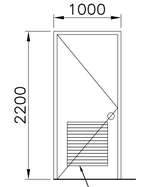

2 DOOR (D2)
SCALE: 1:40

2A DOOR (D2A) 20–MIN. FIRE RATED
SCALE: 1:40

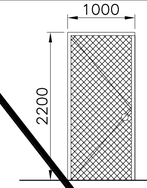

3 DOOR (D3)
SCALE: 1:40

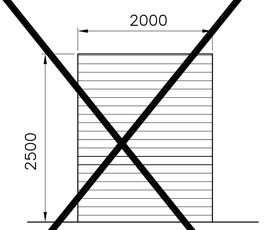

4 DOOR (D4)
SCALE: 1:40

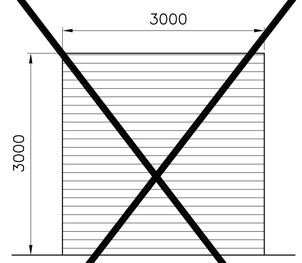

5 DOOR (D5)
SCALE: 1:40

5A DOOR (D5A)
SCALE: 1:40

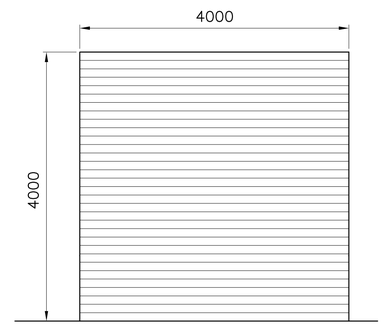

6 DOOR (D6)
SCALE: 1:40

6A DOOR (D6A)
SCALE: 1:40

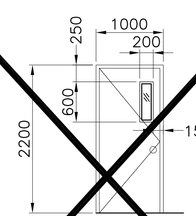

7 DOOR (D7)
SCALE: 1:40

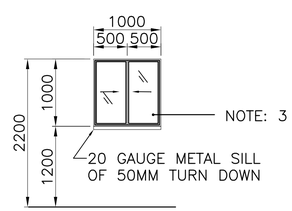

8 WINDOW (W1)
SCALE: 1:40

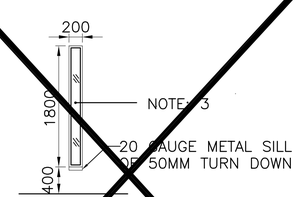

9 WINDOW (W2)
SCALE: 1:40

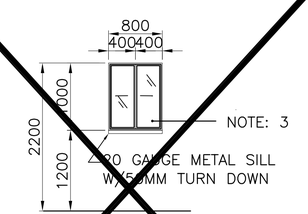

10 WINDOW (W3)
SCALE: 1:40

DOOR SCHEDULE

DOOR NO.	DIMENSION WIDTH	DIMENSION HEIGHT	PANEL NUMBER	OPENING SYSTEM	HDWR. NO.	MATERIAL
D1	1000	2200	1	HINGED	–	HM DOOR IN HM FRAME
~~D1A~~	~~1000~~	~~2200~~	~~1~~	~~HINGED~~		HM DOOR IN HM FRAME; 20 MIN FIRE RATED
D1B	1000	2200	1	HINGED	–	HM DOOR IN HM FRAME; 45 MIN FIRE RATED
D1C	1000	2200	1	HINGED	–	HM DOOR IN HM FRAME; INSULATED
D1D	1000	2200	1	HINGED	–	HM DOOR IN HM FRAME; 90 MIN FIRE RATED
D2	3000	3000	1	HINGED	–	HM DOOR IN HM FRAME W/ LOUVER, SEE MECH.
~~D2A~~	~~3000~~	~~4000~~	~~1~~	~~HINGED~~		HM DOOR IN HM FRAME W/ FIRE DAMPER FUSIBLE LINK LOUVER 20 MIN FIRE RATED
~~D3~~	~~1000~~	~~2200~~	~~1~~	~~HINGED~~		WELDED WIRE MESH IN STEEL FRAME
~~D4~~	~~2000~~	~~2500~~	~~1~~	~~ROLL–UP~~		STEEL DOOR & FRAM, MANUALLY OPERATED, INSULATED
~~D5~~	~~3000~~	~~3000~~	~~1~~	~~ROLL–UP~~		STEEL DOOR & FRAM, MANUALLY OPERATED, INSULATED
~~D5A~~	~~3000~~	~~3000~~	~~1~~	~~ROLL–UP~~		STEEL DOOR & FRAM, MANUALLY OPERATED, UNINSULATED
D6	4000	4000	1	ROLL–UP	–	STEEL DOOR & FRAM, MANUALLY OPERATED, INSULATED
~~D6A~~	~~4000~~	~~4000~~	~~1~~	~~ROLL–UP~~		STEEL DOOR & FRAM, MANUALLY OPERATED, INSULATED
~~D7~~	~~1000~~	~~2200~~	~~1~~	~~HINGED~~		HM DOOR IN HM FRAME W/ LAMINATED GLAZING

WINDOW SCHEDULE

WINDOW NUMBER	DIMENSION WIDTH	DIMENSION HEIGHT	DIMENSION SILL HEIGHT	PANEL NUMBER	OPENING SYSTEM	DESCRIPTION
W1	1000	1000	1700	2	SLIDING	ALUM. PANELS W/TRANSPARENT 6MM GLASS METAL SILL AND FIXED INSECT METAL SCREEN
~~W2~~	~~200~~	~~1800~~	~~400~~	~~1~~	~~FIXED~~	~~ALUM. PANELS W/6MM WIRE GLASS~~
~~W3~~	~~800~~	~~1000~~	~~1700~~	~~2~~	~~SLIDING~~	~~ALUM. PANELS W/TRANSPARENT 6MM GLASS METAL SILL AND FIXED INSECT METAL SCREEN~~

NOTES:

1. FOR HARDWARE SET DESCRIPTION SEE SPECIFICATIONS SECTION.
2. ITEMS BLOCKED OUT, OR LINED THROUGH, DO NOT APPLY TO THIS FACILITY.
3. ALL GLAZING SHALL BE LAMINATED.

GRAPHIC SCALE:

200 0 200mm
SCALE: 1 = 10

UNLESS OTHERWISE NOTED, LINEAR DIMENSIONS SHOWN ARE IN MILLIMETERS.

SYMBOL	DESCRIPTION	DATE	APP.

Designed By: T. WALLACE
Drawn By: T. WALLACE
Checked By: R. BROWN
B. THOMAS
Date: 10 MAY 2007
File No. AF0707
I.S.O. Sheet File Name: AF0707A–AR11SC.dwg
Solicitation Number: –

US Army Corps of Engineers Transatlantic Programs Center

ANA REGIONAL BRIGADE
PAKTIKA, AFGHANISTAN
DPW BUILDING

DOOR & WINDOW SCHEDULE

SHEET REFERENCE NUMBER:
A–A–11

$DATE$
$FILE$

D SIZE BORDER
32 X 20.5

FINISH SCHEDULE

ROOM NO.	ROOM NAME	FLOOR	CEILING	INTERIOR WALLS				REMARKS
				NORTH	EAST	SOUTH	WEST	
100	PARKING BAY	F2	–	W3	W3	W3	W3	–
101	OFFICE	F1	C1	W1	W1	W1	W1	–
102	CLASSROOM	F1	C1	W1	W1	W1	W1	–
103	DINING AREA	F1	C1	W1	W1	W1	W1	–
104	KITCHEN	F1	C1	W1	W1	W1	W1	–
105	TOILET/SHOWER	F1	C1	W2	W2	W2	W2	–
106	SLEEPING AREA	F1	C1	W1	W1	W1	W1	–
107	SLEEPING AREA	F1	C1	W1	W1	W1	W1	–
108	TOILET/SHOWER	F1	C1	W2	W2	W2	W2	–
109	STORAGE	F2	C2	W3	W3	W3	W3	–
110	OFFICE	F1	C1	W1	W1	W1	W1	–
111	JANITOR	F2	C2	W3	W3	W3	W3	–
112	CORRIDOR	F1	C1	W1	W1	W1	W1	–
113	CORRIDOR	F1	C1	W1	W1	W1	W1	–

FINISHING SCHEDULE LEGEND	
FLOOR	
F1	TERRAZO TILE
F2	SEALED CONCRETE
WALL	
W1	CMU W/ PAINTED PLASTER
W2	CERAMIC TILE
W3	PAINTED CMU
CEILING	
C1	PAINTED 25 MM PLASTER
C2	PAINTED EXPOSED PLYWOOD
C3	PAINTED EXPOSED STRUCTURE
WALL SYMBOLS:	
	CMU WALL
CJ	CONTROL JOINT

NOTES:

1– ALL WALLS ARE 200MM THK. CMU UNLESS NOTED OTHERWISE.

2– ALL WALLS TERMINATE AT CEILING UNLESS NOTED OTHERWISE. REF. STRUCT. DRWGS.

3– ALL DOOR JAMBS ARE 200MM UNLESS OTHERWISE NOTED.

4– ALL DIMENSIONS ARE TO FACE OF CMU UNLESS NOTED OTHERWISE.

5– ALL VERTICAL DIMENSIONS & LEVELS ARE FROM GROUND FLOOR FINISHED SLAB. THIS ELEVATION IS +0000.

6– CERAMIC TILE SHALL BE LOCATED ON ALL WET WALLS OF TOILETS / SHOWERS – FULL HEIGHT OF WALLS.

7– SEE STRUCTURAL DRAWINGS FOR LOCATION OF BUILDING CONTROL, EXPANSION AND SEISMIC JOINTS.

8– ALL HVAC OPENINGS DIMENSION SHALL BE VERIFIED WITH APPROVED SUBMITTALS.

9– ALL EXPOSED PURLINS, COLUMNS, FRAMES, AND GIRTS SHALL BE PAINTED.

GRAPHIC SCALE:

200 0 200mm
SCALE: 1 = 10

UNLESS OTHERWISE NOTED, LINEAR DIMENSIONS SHOWN ARE IN MILLIMETERS.

SYMBOL	DESCRIPTION	DATE	APR

Designed By: T. WALLACE
Drawn By: T. WALLACE
Checked By: R. BROWN
B. THOMAS
Date: 10 MAY 2007
File No. AF0707
I.S.O. Sheet File Name: AF0707A–AR10SC.dwg
Solicitation Number: –

US Army Corps of Engineers Transatlantic Programs Center

ANA REGIONAL BRIGADE
PAKTIKA, AFGHANISTAN
DPW BUILDING

WALL SECTIONS

SHEET REFERENCE NUMBER:
A–A–10

$DATE$
$FILE$

D SIZE BORDER
32 X 20.5

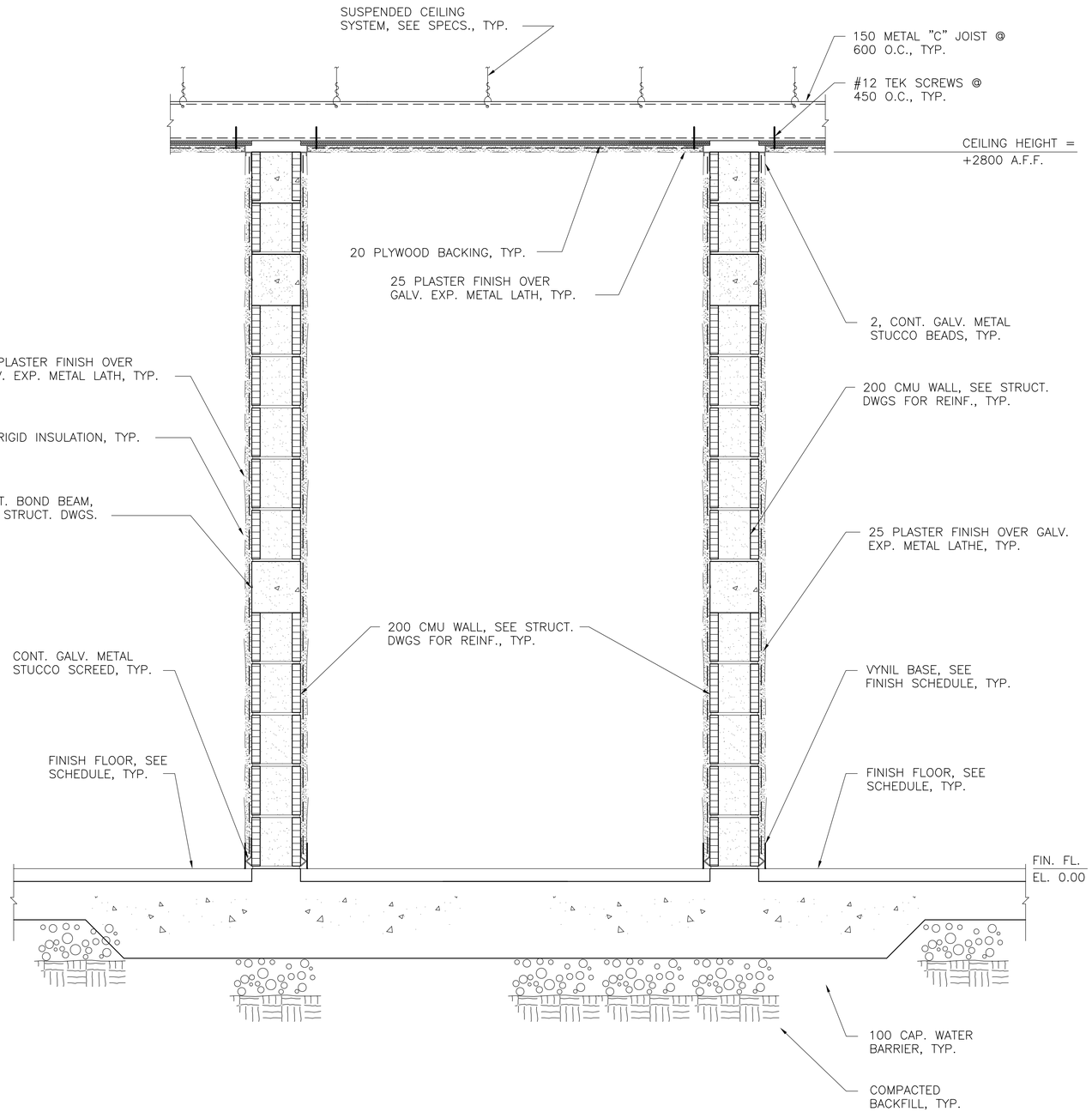

A SECTION

A-A-01 REF. SCALE: 1:10

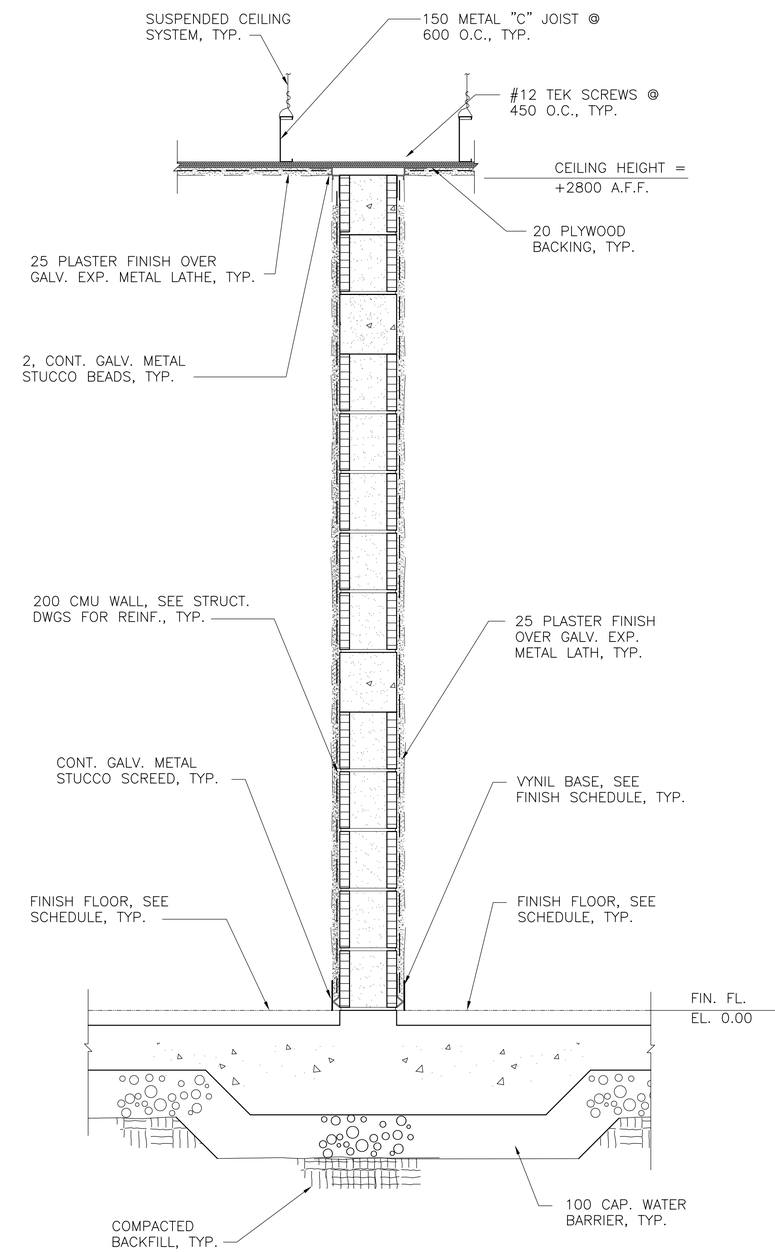

B SECTION

A-A-01 REF. SCALE: 1:10

GRAPHIC SCALE:

200 0 200mm

SCALE: 1 = 10

UNLESS OTHERWISE NOTED, LINEAR DIMENSIONS SHOWN ARE IN MILLIMETERS.

SYMBOL	DESCRIPTION	DATE	APP.

Designed By: T. WALLACE
Drawn By: T. WALLACE
Checked By: R. BROWN
B. THOMAS

Date: 10 MAY 2007
File No. AF0707
I.S.O. Sheet File Name: AF0707A-AR09SE.dwg
Solicitation Number: –

US Army Corps of Engineers Transatlantic Programs Center

ANA REGIONAL BRIGADE
PAKTIKA, AFGHANISTAN
DPW BUILDING

INTERIOR WALL SECTIONS

SHEET REFERENCE NUMBER:
A–A–09

$DATE$
$FILE$

D SIZE BORDER
32 X 20.5

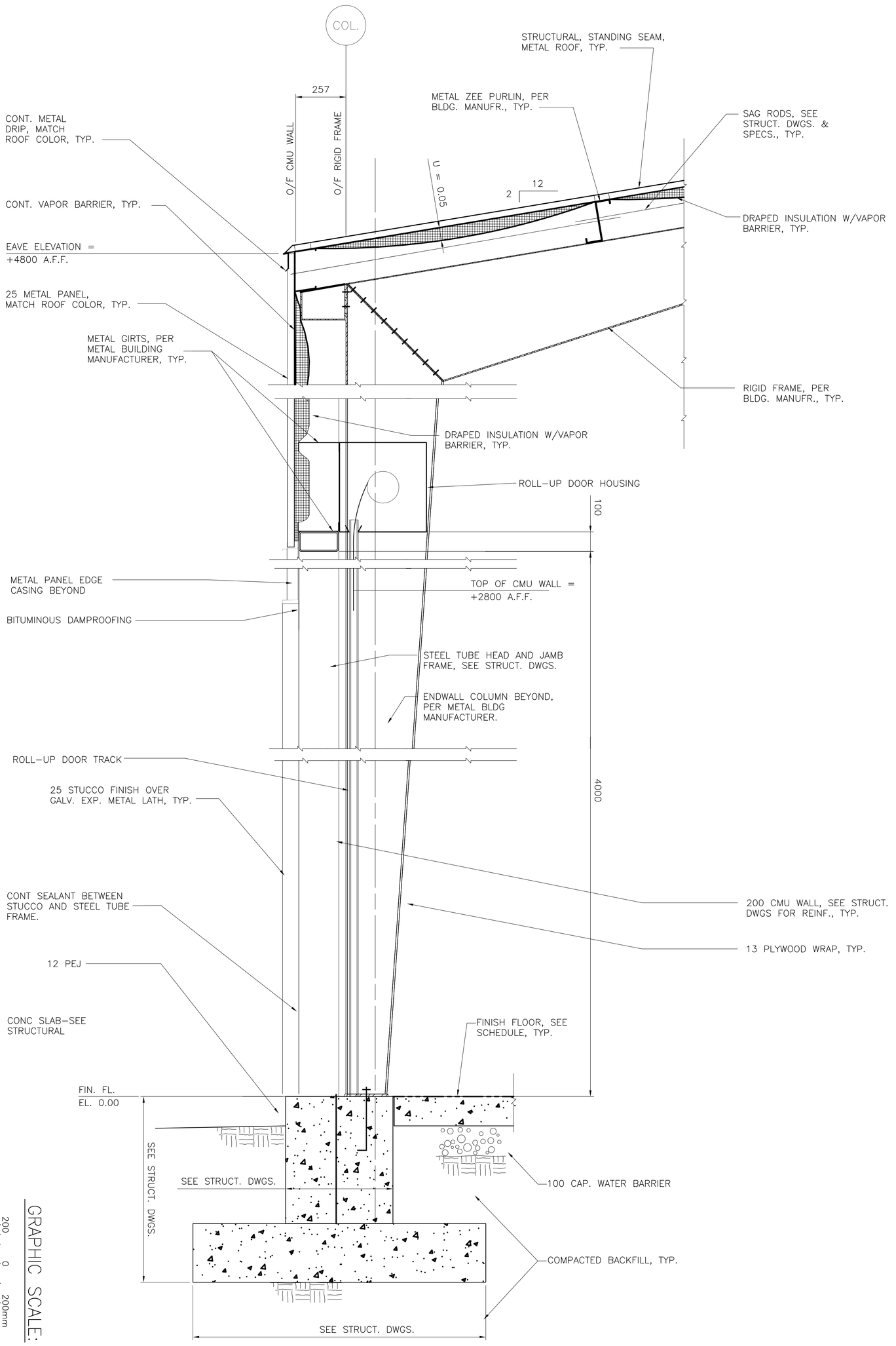

A SECTION

A-A-01 REF. SCALE: 1:10

UNLESS OTHERWISE NOTED, LINEAR DIMENSIONS SHOWN ARE IN MILLIMETERS.

GRAPHIC SCALE: 200 0 200mm SCALE: 1 = 10

SHEET REFERENCE NUMBER: A-A-08

ANA REGIONAL BRIGADE
PAKTIKA, AFGHANISTAN
DPW BUILDING

WALL SECTION
—
—

US Army Corps of Engineers
Transatlantic Programs Center

Designed By: T. WALLACE	Date: 10 MAY 2007
Drawn By: T. WALLACE	File No: AF0707
Checked By: B. BROWN	I.S.O. Sheet File Name: AF0707A-AR08SE.dwg
B. THOMAS	Solicitation Number: —

SYMBOL	DESCRIPTION	DATE	APR

D SIZE BORDER TO C SIZE

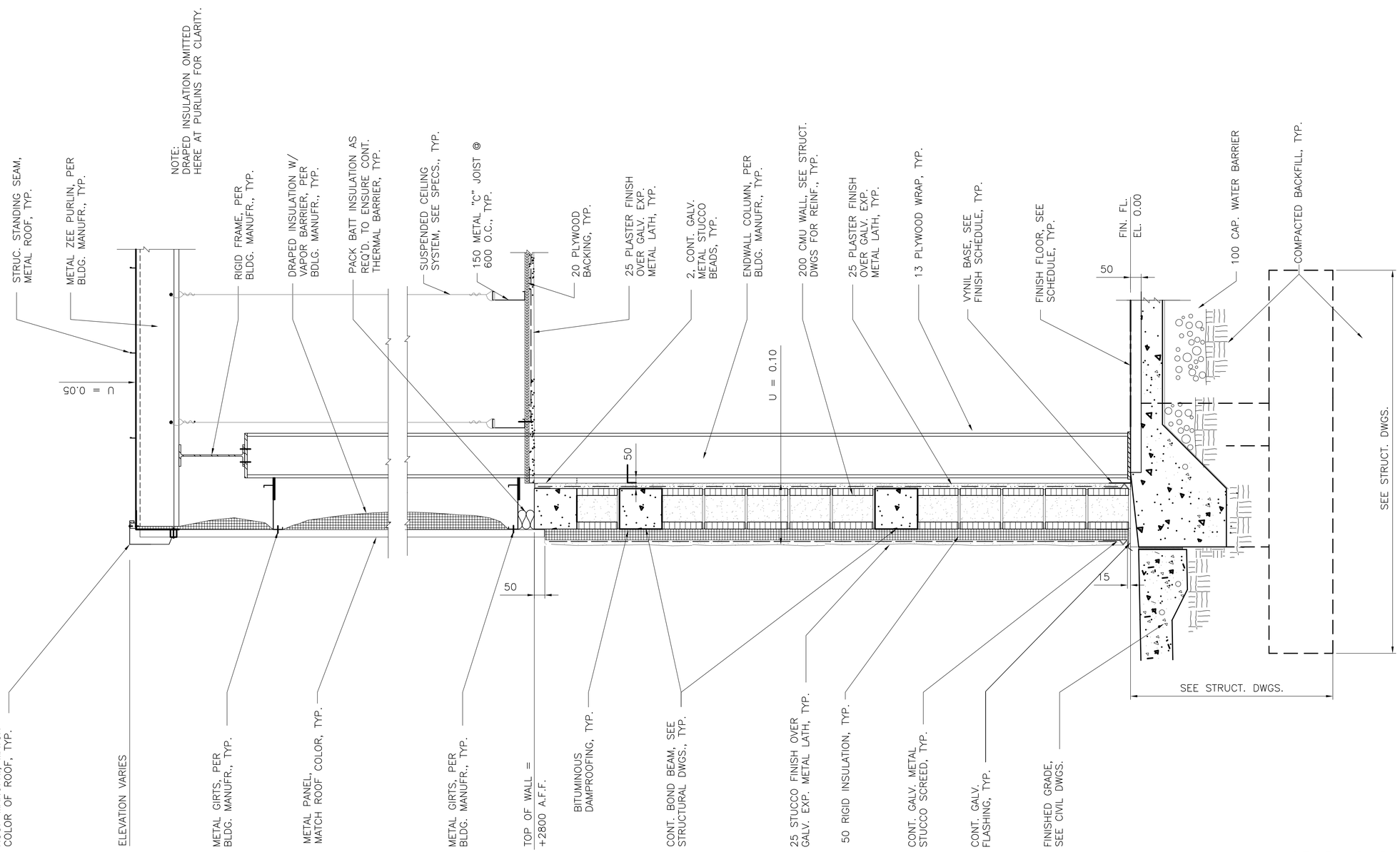

A SECTION
A-A-01 REF.

SCALE: 1:10

GRAPHIC SCALE:

200 0 200mm
SCALE: 1 = 10

UNLESS OTHERWISE NOTED, LINEAR DIMENSIONS SHOWN ARE IN MILLIMETERS.

SYMBOL	DESCRIPTION	DATE	APR

Designed By: T. WALLACE
Date: 10 MAY 2007
Drawn By: T. WALLACE
File No. AF0707
Checked By: B. BROWN
I.S.O. Sheet File Name: AF0707A-AR07SE.dwg
B. THOMAS
Solicitation Number: –

US Army Corps of Engineers Transatlantic Programs Center

ANA REGIONAL BRIGADE
PAKTIKA, AFGHANISTAN
DPW BUILDING
WALL SECTION
– –

SHEET REFERENCE NUMBER:
A–A–07

$DATE$
$FILE$

D SIZE BORDER
30 X 22.5

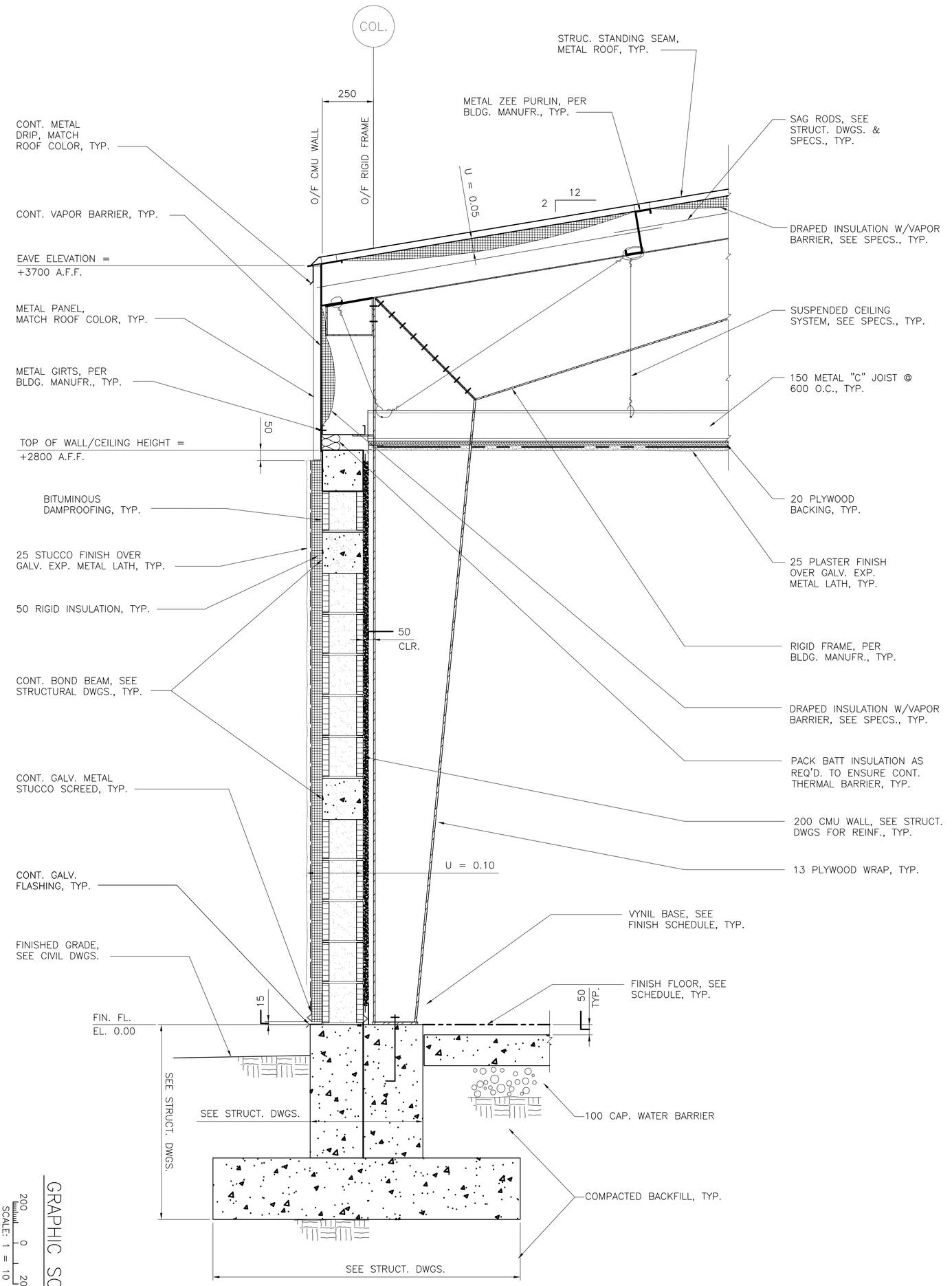

A SECTION

A-A-01 REF. SCALE: 1:10

GRAPHIC SCALE: 200 0 200mm SCALE: 1 = 10

UNLESS OTHERWISE NOTED, LINEAR DIMENSIONS SHOWN ARE IN MILLIMETERS.

SHEET REFERENCE NUMBER: A-A-06

ANA REGIONAL BRIGADE
PAKTIKA, AFGHANISTAN
DPW BUILDING

WALL SECTION
—
—

US Army Corps of Engineers
Transatlantic Programs Center

Designed By: T. WALLACE	Date: 10 MAY 2007
Drawn By: T. WALLACE	File No: AF0707
Checked By: B. BROWN	I.S.O. Sheet File Name: AF0707A-AR06SE.dwg
B. THOMAS	Solicitation Number: —

SYMBOL	DESCRIPTION	DATE	APR

D SIZE BORDER TO C SIZE

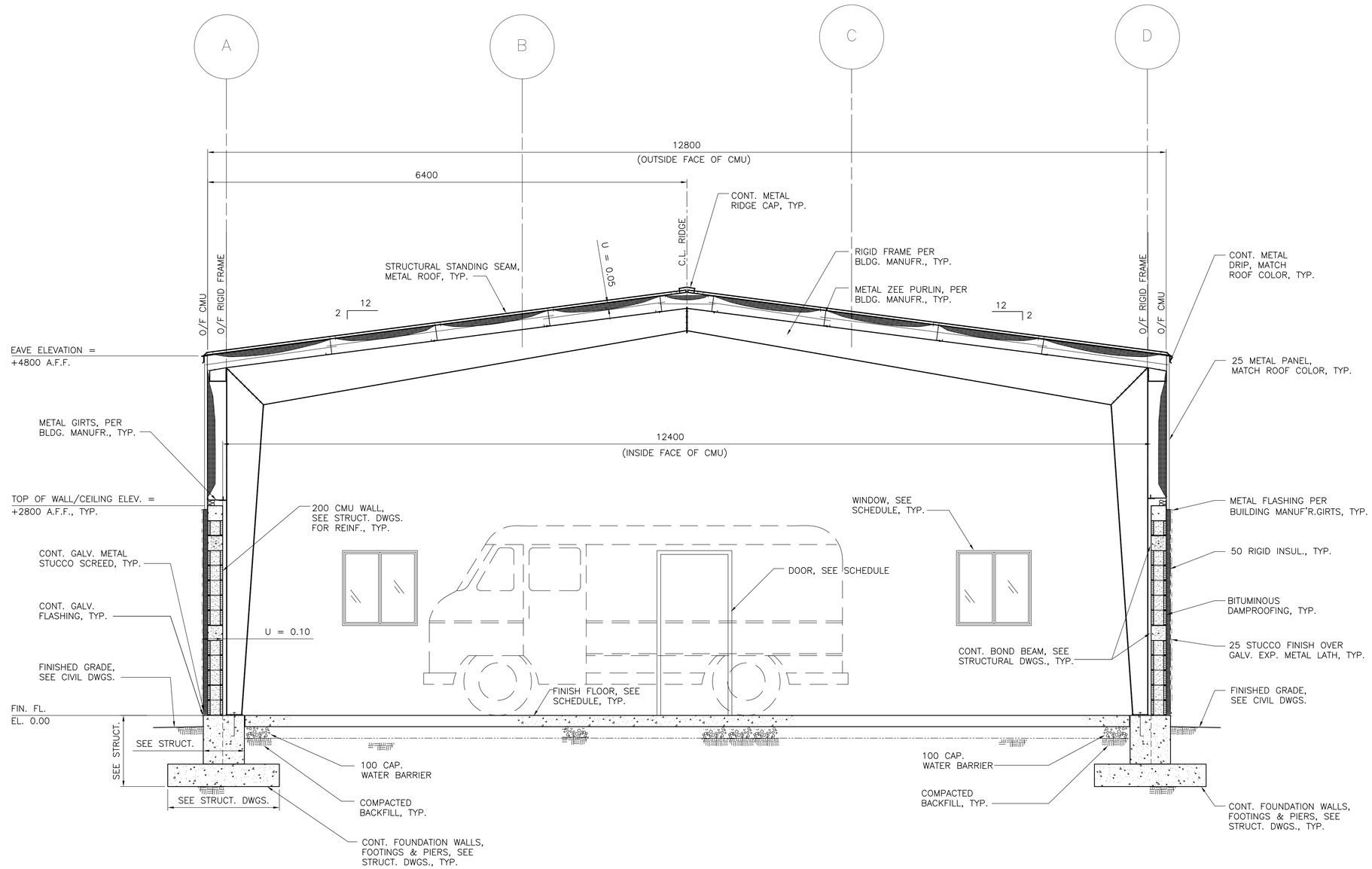

1 DPW - SECTION

A-A-01 REF. SCALE: 1:30

GRAPHIC SCALE:

UNLESS OTHERWISE NOTED, LINEAR DIMENSIONS SHOWN ARE IN MILLIMETERS.

SYMBOL	DESCRIPTION	DATE	APR

Designed By: T. WALLACE
Drawn By: T. WALLACE
Checked By: R. BROWN
B. THOMAS

Date: 10 MAY 2007
File No. AF0707
I.S.O. Sheet File Name: AF0707A-AR05SE.dwg
Solicitation Number: –

US Army Corps of Engineers Transatlantic Programs Center

ANA REGIONAL BRIGADE
PAKTIKA, AFGHANISTAN
DPW BUILDING
BUILDING SECTION
– –

SHEET REFERENCE NUMBER:
A–A–05

$DATE$
$FILE$

D SIZE BORDER
36 X 22.5

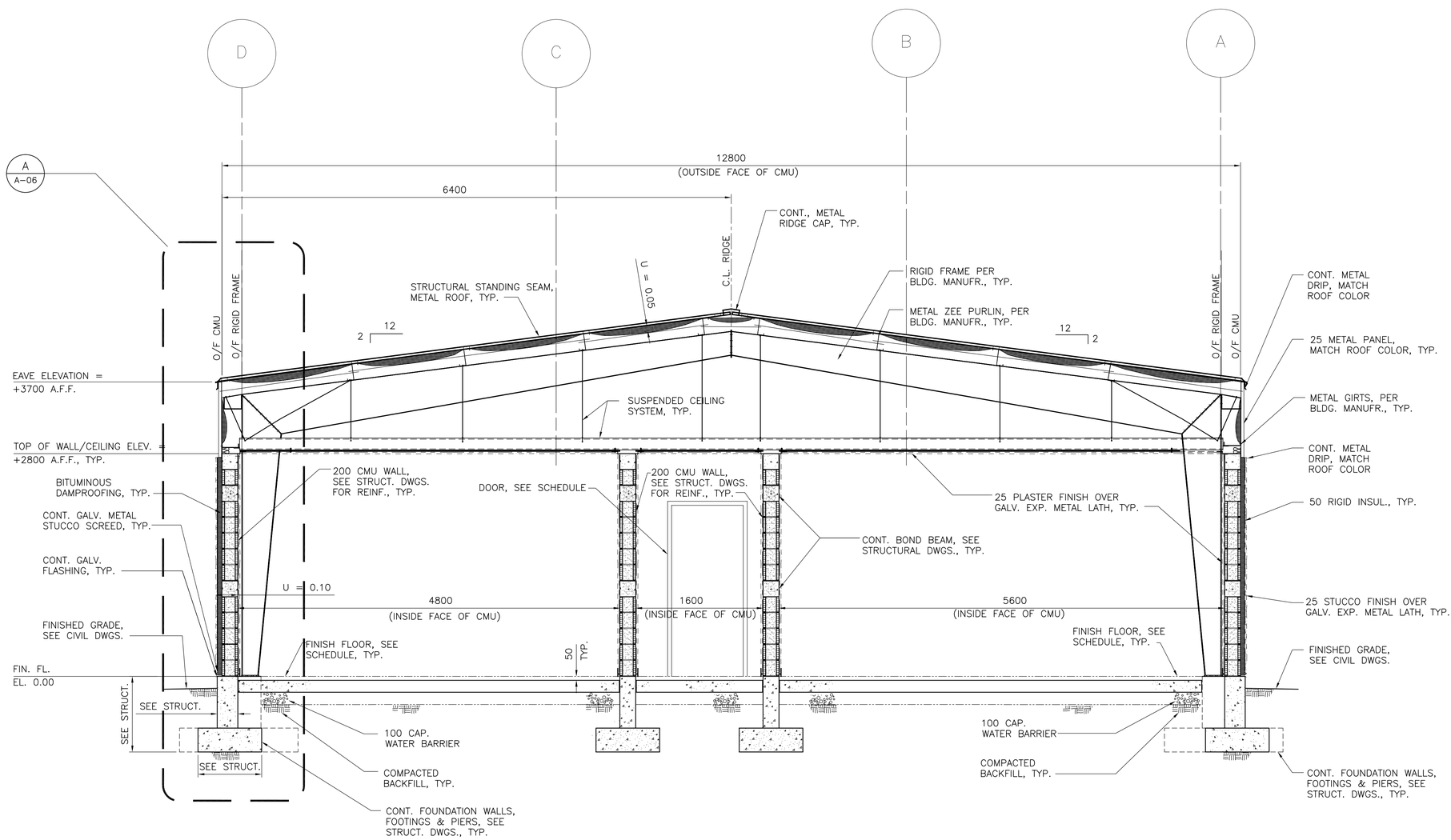

1 DPW - SECTION

A-A-01 REF. SCALE: 1:30

GRAPHIC SCALE:

UNLESS OTHERWISE NOTED, LINEAR DIMENSIONS SHOWN ARE IN MILLIMETERS.

SYMBOL	DESCRIPTION	DATE	APR

Designed By: T. WALLACE
Drawn By: T. WALLACE
Checked By: R. BROWN
B. THOMAS

Date: 10 MAY 2007
File No. AF0707
I.S.O. Sheet File Name: AF0707A-AR04SE.dwg
Solicitation Number: –

US Army Corps of Engineers Transatlantic Programs Center

ANA REGIONAL BRIGADE
PAKTIKA, AFGHANISTAN
DPW BUILDING
BUILDING SECTION
– –

SHEET REFERENCE NUMBER:
A–A–04

$DATE$
$FILE$

D SIZE BORDER
30 X 22.5

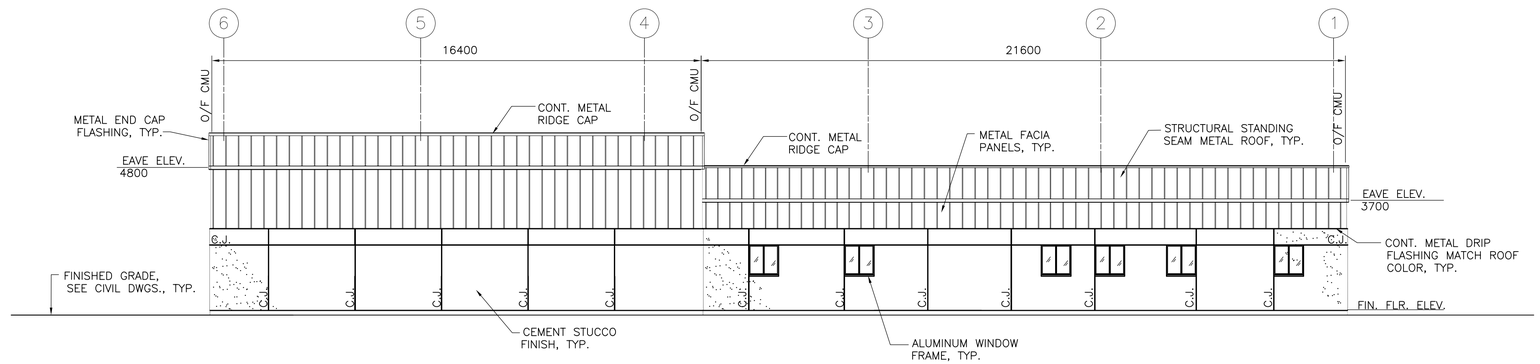

3 DPW - ELEVATION

A-A-01 REF. SCALE: 1:100

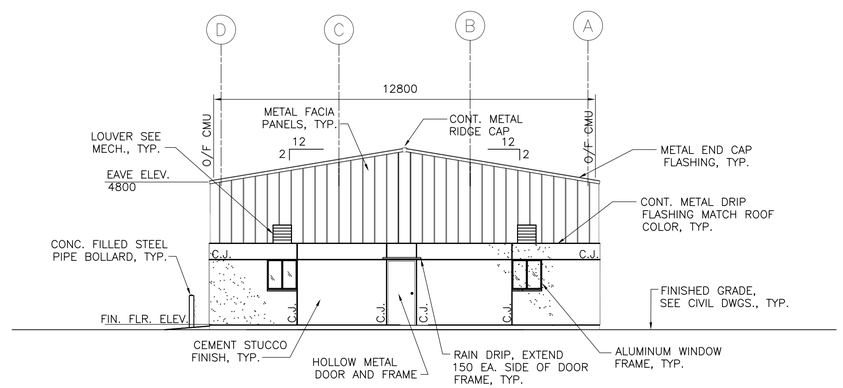

4 DPW - ELEVATION

A-A-01 REF. SCALE: 1:100

GRAPHIC SCALE:

2000 0 2000mm
SCALE: 1 = 100

UNLESS OTHERWISE NOTED, LINEAR DIMENSIONS SHOWN ARE IN MILLIMETERS.

SYMBOL	DESCRIPTION	DATE	APR

Designed By: T. WALLACE
Drawn By: T. WALLACE
Checked By: B. BROWN
B. THOMAS

Date: 10 MAY 2007
File No. AF0707
I.S.O. Sheet File Name: AF0707A-AR03EL.dwg
Solicitation Number: –

US Army Corps of Engineers Transatlantic Programs Center

ANA REGIONAL BRIGADE
PAKTIKA, AFGHANISTAN
DPW BUILDING
ELEVATIONS
– –

SHEET REFERENCE NUMBER:
A–A–03

$DATE$
$FILE$

D SIZE BORDER
30 X 22.5

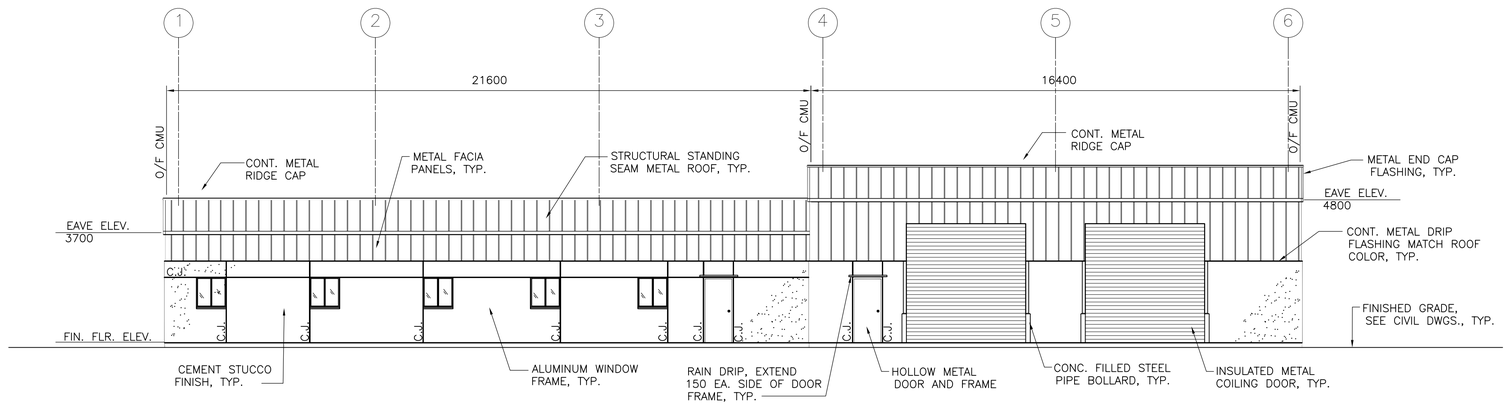

1 DPW - ELEVATION

A-A-01 REF. SCALE: 1:100

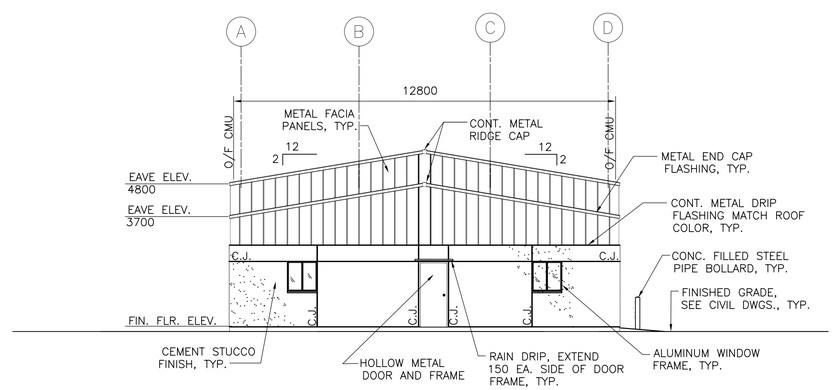

2 DPW - ELEVATION

A-A-01 REF. SCALE: 1:100

GRAPHIC SCALE:

2000 0 2000mm

SCALE: 1 = 100

UNLESS OTHERWISE NOTED, LINEAR DIMENSIONS SHOWN ARE IN MILLIMETERS.

SYMBOL	DESCRIPTION	DATE	APR

Date: 10 MAY 2007
File No. AF0707
I.S.O. Sheet File Name: AF0707A-AR02EL.dwg
Solicitation Number: –

Designed By: T. WALLACE
Drawn By: T. WALLACE
Checked By: B. BROWN
B. THOMAS

US Army Corps of Engineers Transatlantic Programs Center

ANA REGIONAL BRIGADE
PAKTIKA, AFGHANISTAN
DPW BUILDING
ELEVATIONS
– –

SHEET REFERENCE NUMBER:
A–A–02

$DATE$
$FILE$

D SIZE BORDER
36 X 22.5

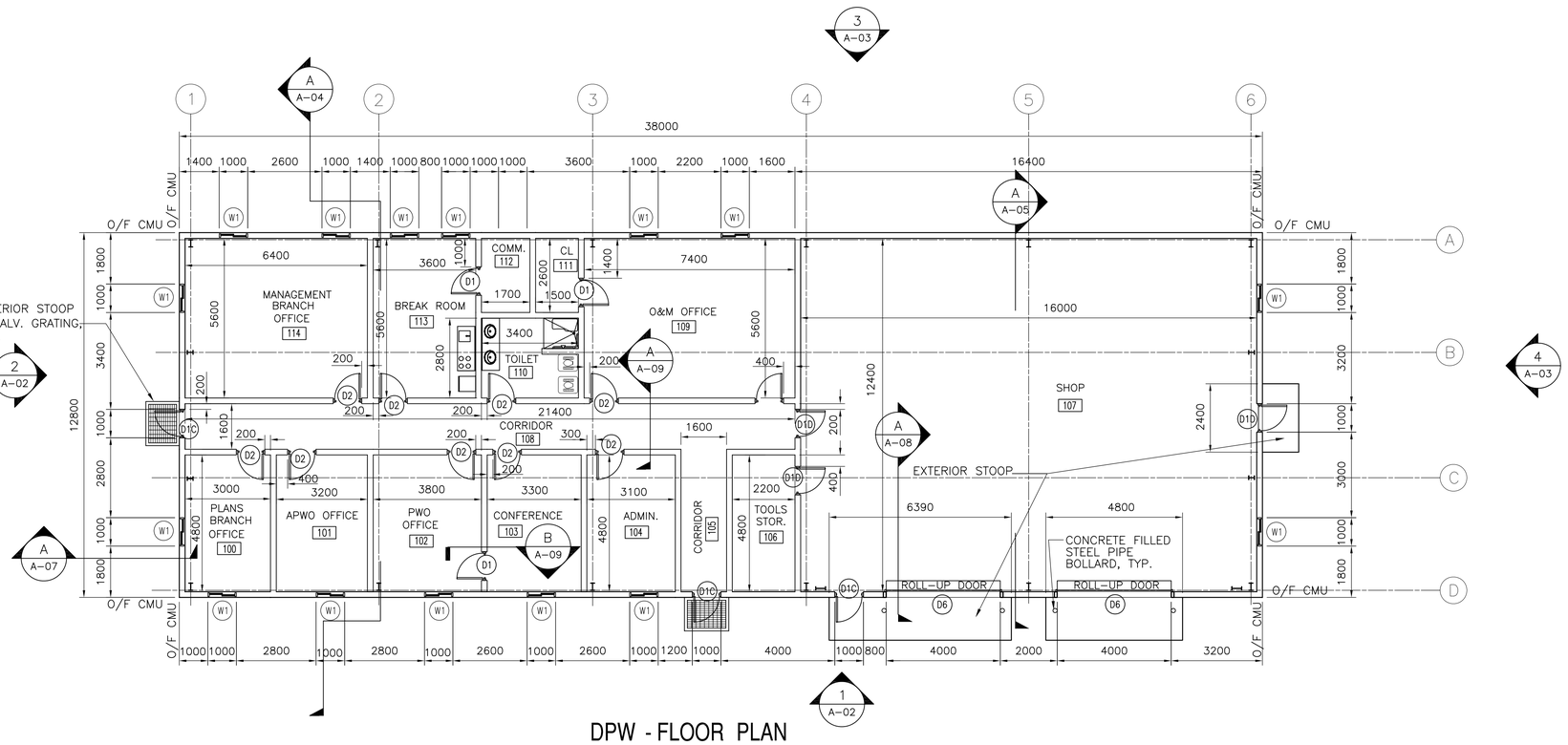

DPW - FLOOR PLAN

SCALE: 1:100

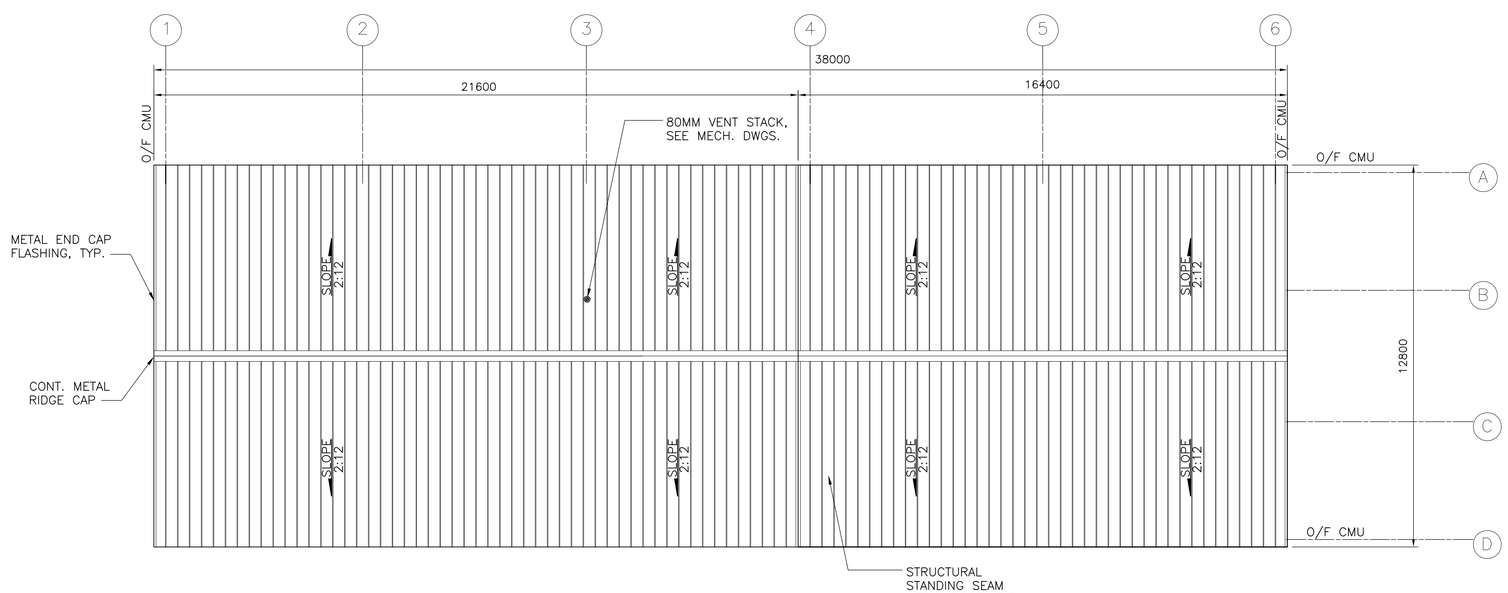

DPW - ROOF PLAN

SCALE: 1:100

WALL SYMBOL:

CMU WALL

NOTES:

1- ALL WALLS ARE 200MM THK. CMU UNLESS NOTED OTHERWISE.

2- ALL WALLS TERMINATE AT CEILING UNLESS NOTED OTHERWISE. REF. STRUCT. DRWGS.

3- ALL DOOR JAMBS ARE 200MM UNLESS OTHERWISE NOTED.

4- ALL DIMENSIONS ARE TO FACE OF CMU UNLESS NOTED OTHERWISE.

5- ALL VERTICAL DIMENSIONS & LEVELS ARE FROM GROUND FLOOR FINISHED SLAB. THIS ELEVATION IS +0000.

6- SEE DRAWING AR12DT FOR MISCELLANEOUS DETAILS.

7- SEE STRUCTURAL DRAWINGS FOR LOCATION OF BUILDING CONTROL, JOINTS.

SYMBOL	DESCRIPTION	DATE	APP.

Designed By: T. WALLACE
Date: 10 MAY 2007
Drawn By: T. WALLACE
File No. AF0707
Checked By: B. THOMAS
I.S.O. Sheet File Name: AF0707A-AR01PN.DWG
T. WHITESIDE
Solicitation Number: -

US Army Corps of Engineers Transatlantic Programs Center

ANA REGIONAL BRIGADE
PAKTIKA, AFGHANISTAN
DPW BUILDING

FLOOR / ROOF PLAN -

SHEET REFERENCE NUMBER:
A-A-01

GRAPHIC SCALE:

2000 0 2000mm
SCALE: 1 = 100

UNLESS OTHERWISE NOTED, LINEAR DIMENSIONS SHOWN ARE IN MILLIMETERS.

D SIZE BORDER
32 X 20.5

$DATE$
$FILE$

ARCHITECTURAL ABBREVIATIONS

A	
ABOVE FINISH FLOOR	AFF
ACCESS PANEL	AP
ACOUSTIC	ACOUS (ACST)
ACTIVE LEAF	A/L
AGGREGATE	AGG
AIR CONDITIONING	A/C
ALUMINUM	ALUM (AL)
ANCHOR BOLT	AB
AND	&
ANGLE	∠ (ANG)
ARCHITECTURAL	ARCH
AREA INLET	AI.
ASPHALT	ASPH
AT	@
AUTOMATIC	AUTO
B	
BACK OF WALL	BOW
BATTEN INSULATION	BATT INSUL
BEAM	BM
BEARING	BRG
BITUMINOUS	BIT (BITUM)
BLOCK	BLK
BLOCKING	BLKG
BOARD	BD
BOTTOM	BOT (BOTT)
BRACING	BRCG
BRACKET	BRKT
BUILDING	BLDG
C	
CABINET	CAB
CAST IRON	CI
CATCH BASIN	CB
CEILING	CLG
CEMENT	CEM
CENTER	CTR
CENTER LINE	℄ OR CL
CENTER TO CENTER	CC
CERAMIC TILE	CT
CIRCULAR	CIR
CLEANOUT	CO
CLEAR	CLR
CLOSET	CLO
COLUMN	COL
CONCRETE	CONC
CONCRETE MASONRY UNITS	CMU
CONNECTION	CONN
CONSTRUCTION	CONSTR
CONSTRUCTION JOINT	CONSTR JT
CONTINUOUS	CONT.
CONTROL JOINT	CJ
CORNER	COR
CORRIDOR	CORR
COUNTER	CNTR
COUNTER SUNK	CSK
D	
DAMPPROOFING	DP
DETAIL	DET (DETL)
DIAGONAL	DIAG
DIAMETER	DIA
DIMENSION	DIM
DISPENSER	DISP
DOOR	DR
DOUBLE	DBL
DOWN	DN
DRAWER	DWR
DRAWING	DWG
DRINKING FOUNTAIN	DF
E	
EACH	EA
ELECTRICAL OR ELECTRIC	ELEC
ELEVATION	EL.
EMERGENCY	EMERG
ENCLOSURE	ENCL
ENTRANCE	ENTR
EQUIPMENT	EQUIP (EQPT)
EQUAL	EQ
EXHAUST	EXH
EXISTING	EXIST.
EXPANSION	EXPN
EXPANSION JOINT	EJ (EXP JT)
EXTERIOR	EXT
F	
FACE OF CONCRETE	FOC
FACE OF FINISH	FOF
FACE OF MASONRY	FOM
FACE OF WALL	FOW
FINISH	FIN.
FIRE HYDRANT	FH
FIXTURE	FIX
FLASHING	FLASH
FLOOR	FLR OR FL
FLOOR DRAIN	FD
FLOORING	FLG
FOOTING	FTG
FOUNDATION	FDN
FRAME	FR
FINISH FLOOR LINE	FFL
FIRE EXTINGUISHER	FE
G	
GAGE OR GAUGE	GA
GALVANIZED	GALV
GALVANIZED IRON	GI
GAS	G
GRID LINE	GL
GLAZED WALL TILE	GWT
GRADE	GR
GROUND	GND
GROUND CLEANOUT	GCO
GYPSUM	GYP
GYPSUM WALLBOARD	GYP BD (GWB)
H	
HANDRAIL	HDR
HARDBOARD	HBD
HARDWARE	HDW (HW)
HEAD	HD
HEATER	HTR
HEIGHT	HT (HGT)
HIGH POINT	H.PT.
HOLLOW METAL	HM
HORIZONTAL	HORIZ
HOSE BIBB	HB
I	
INSIDE DIAMETER	I.D.
INSULATION	INSUL.
INTERIOR	INT (INTR)
J	
JANITOR	JAN
JOINT	JT
JOIST	JST
K	
KEY LOCK	KL
KICK PLATE	KP
L	
LABORATORY	LAB
LAMINATE	LAM
LAVATORY	LAV
LIGHT	LT
LIGHTING	LTG
LOW POINT	LP
LUMBER	LBR
LOUVER	LVR
M	
MACHINE	MACH
MAINTENANCE	MAINT
MASONRY OPENING	MO
MASONRY UNIT	MU
MASTIC	MSTC
MATERIAL	MATL
MAXIMUM	MAX
MECHANICAL	MECH
METAL	MET
METAL BUILDING MANUFACTURER	MBM
MINIMUM	MIN
MIRROR	MIR
MISCELLANEOUS	MISC
MONOLITHIC	MONO
N	
NORTH	N
NOT IN CONTRACT	NIC
NUMBER	NO. (#)
NOT TO SCALE	NTS
O	
OFFICE	OFF.
ON CENTER	OC
OPENING	OPNG
OPPOSITE	OPP
OUTSIDE DIAMETER	O.D.
P	
PANEL	PNL
PAPER TOWEL DISPENSER	PTD
PAPER TOWEL DISPENSER & RECEPTACLE	PTD/R
PAPER TOWEL RECEPTACLE	PTR
PARTITION	PRTN
PLASTER	PLAST
PLATE	PL OR P
PLUMBING	PLBG
PLYWOOD	PLY WD
PRECAST	PRCST
Q	
QUARRY TILE	Q.T.
QUARTERS	QTRS
R	
RADIUS	RAD
RECEPTACLE	RECP
REFERENCE	REF
REFRIGERATOR	REFR
REINFORCEMENT	REINF
REQUIRED	REQD
REVISIONS	REV
RISER	R
ROOFING	RFG
ROOM	RM
ROUGH	RGH
S	
SANITARY NAPKIN DISPENSER	SND
SANITARY NAPKIN RECEPTACLE	SNR
SCHEDULE	SCH
SEAT COVER DISPENSER	SCD
SERVICE SINK	SSK
SHEATHING	SHTHG
SHEET	SHT.
SHEET METAL	SHT. MET.
SHOWER	SHR
SIMILAR	SIM
SOAP DISPENSER	SD
SOLID CORE	SC
SOUTH	S
SPEAKER	SPKR
SPECIFICATION	SPEC
SPLASH BLOCK	SB
SQUARE	SQ OR ⧈
STANDARD	STD
STEEL	STL
STORAGE	STOR
STRUCTURAL	STRL
SUSPENDED	SUSP
SYMMETRICAL	SYM
T	
TELEPHONE	TEL
TEMPERATURE	TEMP
TEMPERED GLASS	T
TERRAZZO	TER
THICK	THK
TOILET PAPER DISPENSER	TPD
TOP OF CONCRETE	TOC
TOP OF CURB	TC
TOP OF PAVEMENT	TP
TOP OF STEEL	TOS
TOP OF WALL	TW
TOPOGRAPHY	TOPO
TYPICAL	TYP
U	
UNLESS OTHERWISE NOTED	UON
URINAL	UR
V	
VENTILATOR	VENT
VENT THRU ROOF	VTR
VERTICAL	VERT
VESTIBULE	VEST
W	
WATER CLOSET	WC
WEIGHT	WT
WELDED WIRE FABRIC	WWF
WINDOW	W/
WITH	W/
WITHOUT	W/O
WOOD	WD

SYMBOLS

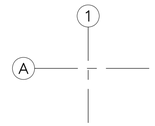

GRID LINES

DETAIL

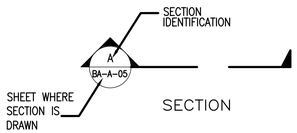

SECTION

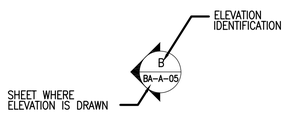

EXTERIOR ELEVATION

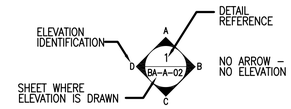

INTERIOR ELEVATION

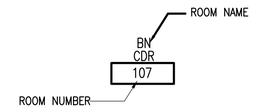

ROOM IDENTIFICATION

DOOR NUMBER

WINDOW NUMBER

LOUVER NUMBER

MATERIAL LEGEND

CONCRETE

CONCRETE MASONRY UNIT (CMU)

SAND, MORTAR

METAL STUD WALL

WOOD – FRAMING

WOOD BLOCKING

METAL

INSULATION, BATT

GYPSUM BOARD

WOOD – FINISH

GENERAL NOTES:

UNLESS OTHERWISE NOTED, LINEAR DIMENSIONS SHOWN ARE IN MILLIMETERS.

SYMBOL	DESCRIPTION	DATE	APP.

Designed By: T. WALLACE
Drawn By: T. WALLACE
Checked By: R. BROWN
Date: 10 MAY 2007
File No. AF0707
I.S.O. Sheet File Name: A0707A–AB01.dwg
Solicitation Number: –
B. THOMAS

US Army Corps of Engineers Transatlantic Programs Center

ANA REGIONAL BRIGADE
PAKTIKA, AFGHANISTAN
DPW BUILDING

ABBREVIATIONS & SYMBOLS

–

SHEET REFERENCE NUMBER:
A–A–00

$DATE$
$FILE$

D SIZE BORDER
32 X 20.5

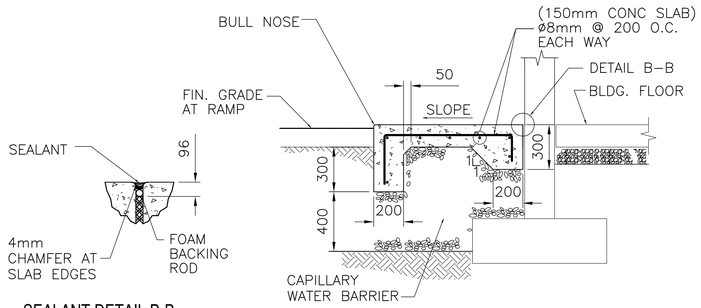

SEALANT DETAIL B-B

SECTION A-A

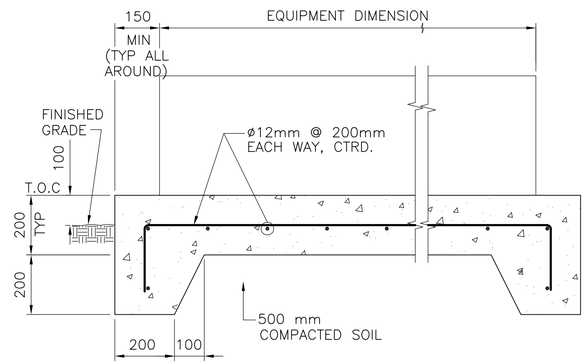

TYPICAL ALL AROUND PERIMETER

NOTE:

PAD DIMENSIONS, ANCHOR BOLT SIZE AND LOCATIONS, AND OTHER EMBEDDED ITEMS SHALL CONFORM TO EQUIPMENT MANUFACTURER'S REQUIREMENTS.

2 CONCRETE PAD FOR EXTERIOR EQUIPMENT

A-SS-04 REF. SCALE: 1:10

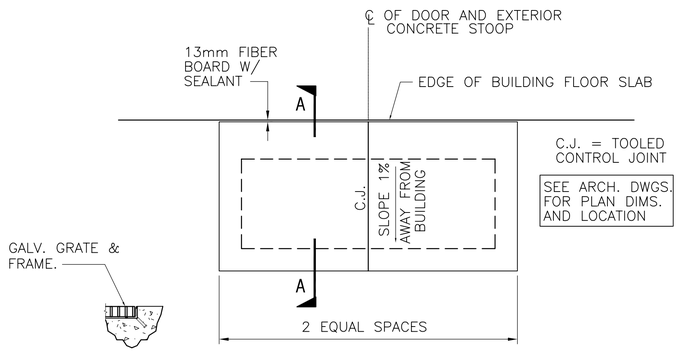

DETAIL D-D

EXTERIOR STOOPS

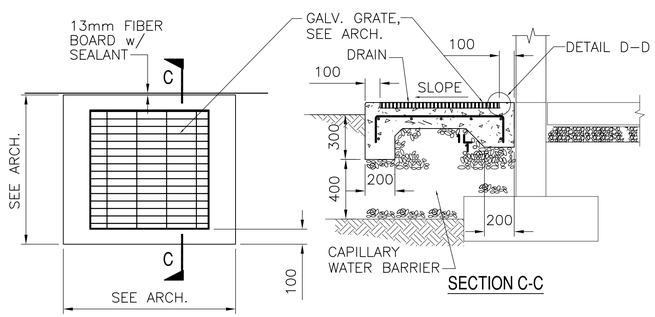

SECTION C-C

EXTERIOR STOOPS w/ GALVANIZED GRATE

1 CONCRETE STOOP/RAMP DETAILS

A-SS-04 REF. SCALE: 1:20

200 0 200mm
SCALE: 1 = 10

UNLESS OTHERWISE NOTED, LINEAR DIMENSIONS SHOWN ARE IN MILLIMETERS.

SYMBOL	DESCRIPTION	DATE	APP.

Designed By: D. SMITH
Drawn By: D. SMITH
Checked By: M. THOMPSON
Date: 10 MAY 2007
File No. AF0707
I.S.O. Sheet File Name: AF0707A–SS04DT.DWG
Solicitation Number: –

US Army Corps of Engineers Transatlantic Programs Center

ANA REGIONAL BRIGADE
PAKTIKA, AFGHANISTAN
DPW BUILDING

MISCELLANEOUS EXTERIOR CONCRETE PAD DETIALS

SHEET REFERENCE NUMBER:
A–SS–04

$DATE$
$FILE$

D SIZE BORDER
32 X 20.5

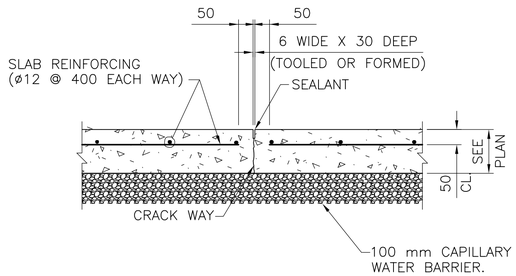

1 SLAB ON GRADE OR PAVEMENT CONTROL JOINT

B-SS-03 REF. SCALE: 1:10

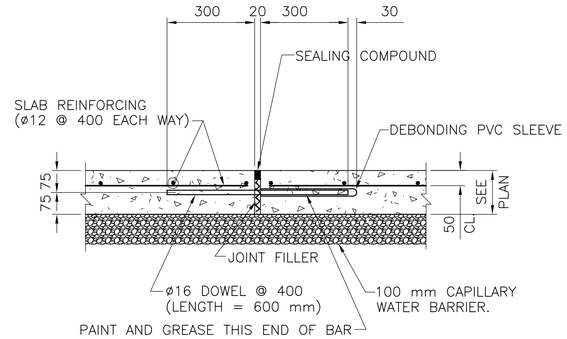

2 PAVEMENT EXPANSION JOINT

B-SS-03 REF. SCALE: 1:10

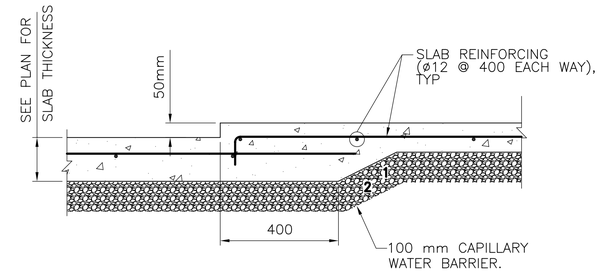

3 DEPRESSED SLAB DETAIL

B-SS-03 REF. SCALE: 1:10

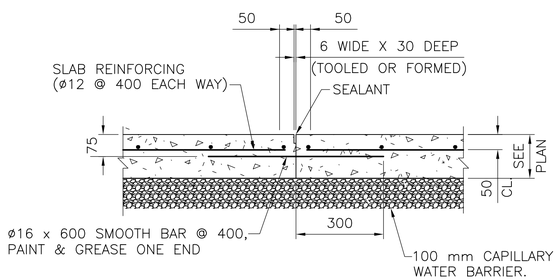

4 SLAB ON GRADE OR PAVEMENT CONSTRUCTION JOINT

B-SS-03 REF. SCALE: 1:10

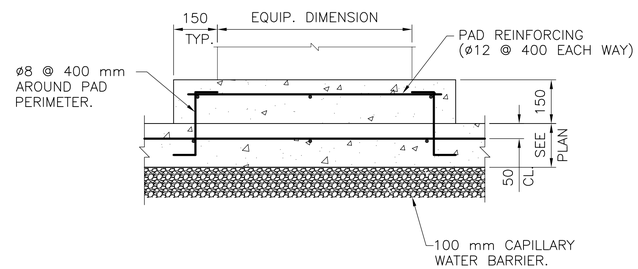

5 INTERIOR EQUIPMENT PAD DETAIL

B-SS-03 REF. SCALE: 1:10

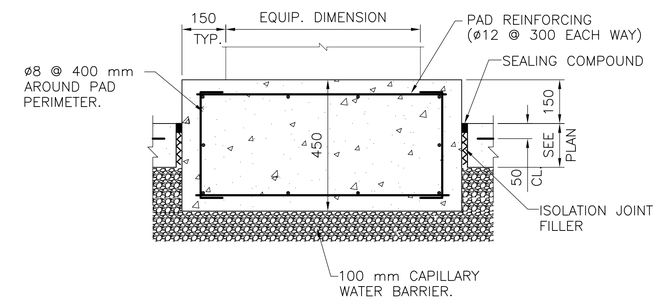

6 LARGE EQUIPMENT ISOLATION PAD DETAIL

B-SS-03 REF. SCALE: 1:10

200 0 200mm
SCALE: 1 = 10

UNLESS OTHERWISE NOTED, LINEAR DIMENSIONS SHOWN ARE IN MILLIMETERS.

SYMBOL	DESCRIPTION	DATE	APR

Date: 10 MAY 2007
File No. AF0707
I.S.O. Sheet File Name: AF0707B-SS03DT.DWG
Solicitation Number: –

Designed By: D. SMITH
Drawn By: D. SMITH
Checked By: M. THOMPSON

US Army Corps of Engineers
Transatlantic Programs Center

ANA REGIONAL BRIGADE
PAKTIKA, AFGHANISTAN
DETENTION FACILITY

TYPICAL SLAB ON GRADE DETAILS

SHEET REFERENCE NUMBER:
B-SS-03

$DATE$
$FILE$

D SIZE BORDER
32 X 20.5

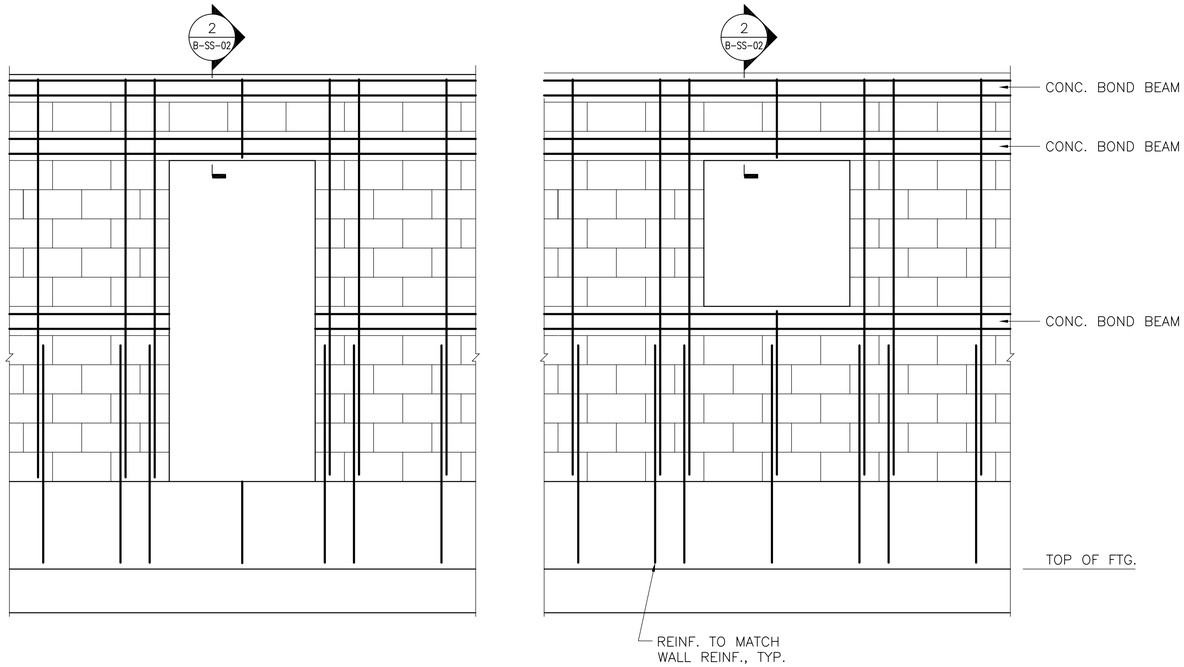

1 | CMU WALL PARTIAL ELEVATION

B-SS-02 | REF. SCALE: 1:20

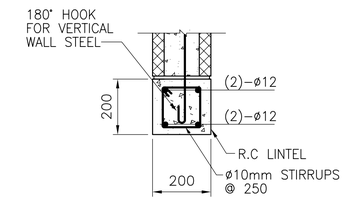

2 | LINTEL SECTION

B-SS-02 | REF. SCALE: 1:10

1000 0 1000mm
SCALE: 1 = 50

UNLESS OTHERWISE NOTED, LINEAR DIMENSIONS SHOWN ARE IN MILLIMETERS.

SYMBOL	DESCRIPTION	DATE	APR

Designed By: A. PIERCE
Drawn By: A. PIERCE
Checked By: D. SMITH
Date: 10 MAY 2007
File No. AF0707
I.S.O. Sheet File Name: AF0707B-SS02DT.DWG
Solicitation Number: –

US Army Corps of Engineers
Transatlantic Programs Center

ANA REGIONAL BRIGADE
PAKTIKA, AFGHANISTAN
DETENTION FACILITY

TYPICAL MASONRY DETAILS

SHEET REFERENCE NUMBER:
B-SS-02

$DATE$
$FILE$

D SIZE BORDER
32 X 20.5

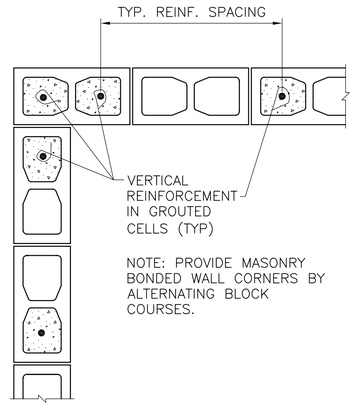

1 TYPICAL CMU CORNER WALL REINFORCING DETAIL

B-SS-01 REF. SCALE: 1:10

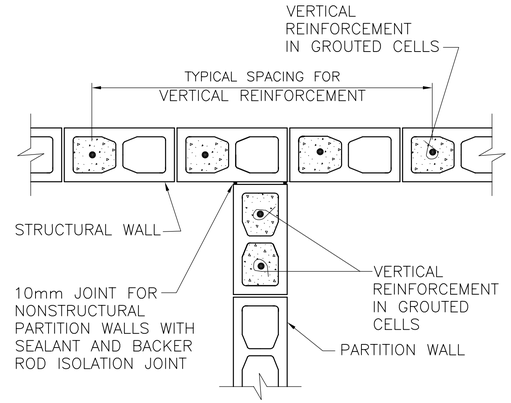

2 TYPICAL CMU PARTITION WALL REINFORCING DETAIL

B-SS-01 REF. SCALE: 1:10

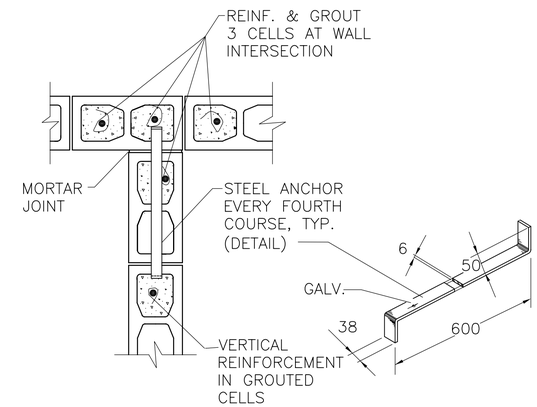

3 TYPICAL CMU STRUCTURAL WALL REINFORCING DETAIL

B-SS-01 REF. SCALE: 1:10

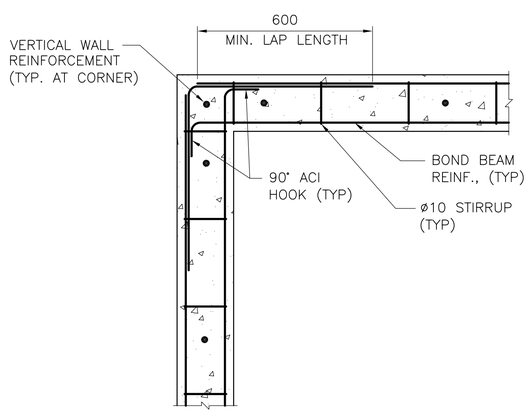

4 TYPICAL CIP CONCRETE BOND BEAM REINFORCING DETAIL

B-SS-01 REF. SCALE: 1:10

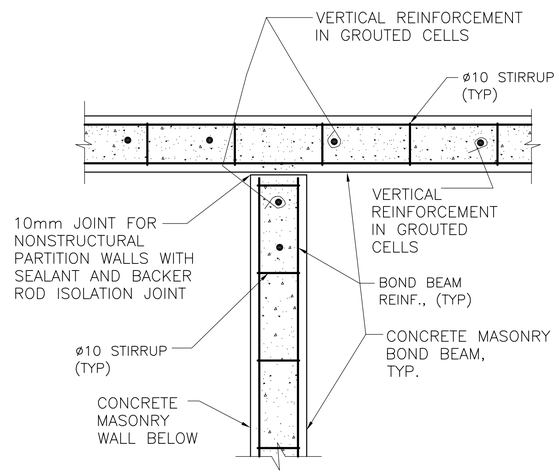

5 TYPICAL CIP CONCRETE BOND BEAM REINFORCING DETAIL

B-SS-01 REF. SCALE: 1:10

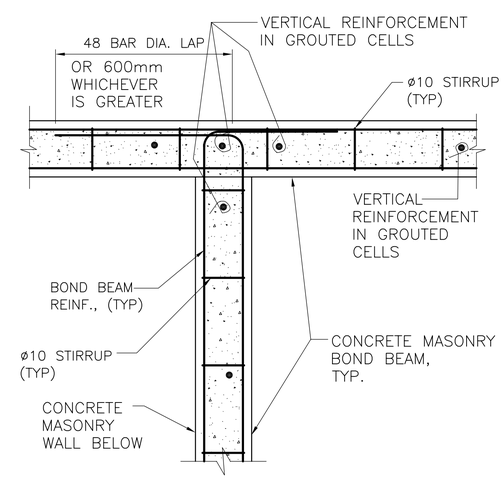

6 TYPICAL CIP CONCRETE BOND BEAM REINFORCING DETAIL

B-SS-01 REF. SCALE: 1:10

1000 0 1000mm
SCALE: 1 = 50

UNLESS OTHERWISE NOTED, LINEAR DIMENSIONS SHOWN ARE IN MILLIMETERS.

SYMBOL	DESCRIPTION	DATE	APR

Designed By: A. PIERCE
Drawn By: A. PIERCE
Checked By: D. SMITH
Date: 10 MAY 2007
File No. AF0707
I.S.O. Sheet File Name: AF07078-SS01DT.DWG
Solicitation Number: –

US Army Corps of Engineers Transatlantic Programs Center

ANA REGIONAL BRIGADE
PAKTIKA, AFGHANISTAN DETENTION FACILITY

TYPICAL MASONRY DETAILS

SHEET REFERENCE NUMBER:
B-SS-01

$DATE$
$FILE$

D SIZE BORDER
32 X 20.5

GENERAL:

1. CONTRACTOR SHALL VERIFY ALL DIMENSIONS AND CONDITIONS AFFECTING THE WORK AT JOBSITE.

2. ALL STRUCTURAL WORK AND MATERIALS SHALL CONFORM TO THE REQUIREMENTS OF THE PROJECT SPECIFICATIONS.

3. FOR LOCATION AND DIMENSIONS OF GROOVES, REGLETS, SLEEVES, OPENINGS, AND EMBEDDED OR ATTACHED ITEMS, REFER TO ARCHITECTURAL, MECHANICAL, ELECTRICAL, AND PIPING DRAWINGS.

CODES:

1. ALL PARTS SHALL BE FURNISHED AND ERECTED ACCORDING TO THE APPLICABLE CODES AND SPECIFICATIONS OF THE FOLLOWING:

AMERICAN CONCRETE INSTITUTE	(ACI)
AMERICAN INSTITUTE OF STEEL CONSTRUCTION	(AISC)
AMERICAN IRON AND STEEL INSTITUTE	(AISI)
AMERICAN WELDING SOCIETY	(AWS)
MINIMUM DESIGN LOADS FOR BUILDINGS AND OTHER STRUCTURES	(ASCE)
INTERNATIONAL BUILDING CODE	(IBC)

DESIGN LOADS:

1. ROOF LOADING

A. LIVE LOAD 100 KG/SQ METER (20 PSF)
B. SNOW LOAD 75 KG/SQ METER (15 PSF)
C. COLLATERAL LOAD 50 KG/SQ METER (10 PSF)

2. WIND LOADING

A. BASIC WIND SPEED 145 KM/HR (90 MPH)
B. EXPOSURE CATEGORY "B"
C. IMPORTANCE FACTOR, Iw = 1.00
D. BUILDING CATEGORY "II"

3. SEISMIC LOADING:

A. Ss = 1.28g
B. S1 = 0.51g
C. SEISMIC USE GROUP "I"
D. SITE CLASSIFICATION "D"
E. IMPORTANCE FACTOR I = 1.0

BASIC SEISMIC FORCE RESISTING SYSTEM:

LOAD BEARING CMU WALL SYSTEM WITH SPECIAL REINFORCED MASONRY SHEAR WALLS

DESIGN BASE SHEAR: 0.17W

ANALYSIS PROCEDURE: EQUIVALENT LATERAL FORCE METHOD

FOUNDATIONS:

1. ALL FOOTINGS SHALL BEAR ON SOIL CAPABLE OF SUSTAINING THE LOADS.

2. CONTINUOUS WALL FOOTINGS WERE DESIGNED FOR A SOIL BEARING CAPACITY OF 9765 KG/SQ. METER (2000 PSF). ISOLATED COLUMN FOOTINGS WERE DESIGNED FOR A MAXIMUM BEARING CAPACITY OF 9765 KG/SQ. METER (2000 PSF).

3. ELEVATIONS SHOWN ON PLANS FOR TOP OF FOOTINGS ARE MINIMUM DEPTH. DIFFERENT OR UNUSUAL CONDITIONS SHALL BE REPORTED TO THE CONTRACTING OFFICER.

4. ALL FOOTING REINFORCEMENT SHALL BE SECURELY SUPPORTED ABOVE GROUND. CONCRETE BLOCK AND BROKEN TILE SHALL NOT BE USED. CONCRETE OR CLAY BRICK MAY BE USED.

CONCRETE

1. STRUCTURAL CONCRETE FOR THE BUILDING STRUCTURE SHALL HAVE THE FOLLOWING PROPERTIES:

FOOTINGS: f'c = 210 KG/SQ. CM (3,000 PSI) AT 28 DAYS
SLABS: f'c = 210 KG/SQ. CM (3,000 PSI) AT 28 DAYS

2. ALL REINFORCING STEEL SHALL BE DEFORMED BARS CONFORMING TO ASTM A615 GRADE 60 UNLESS NOTED OTHERWISE.

3. LOCATION OF ALL CONCRETE JOINTS, OTHER THAN THOSE SPECIFIED, SHALL BE APPROVED BY THE CONTRACTING OFFICER BEFORE CONCRETE PLACEMENT.

4. MINIMUM PROTECTIVE COVER OF REINFORCEMENT (SEE DETAILS) SHALL BE AS FOLLOWS:

FOOTINGS, 75mm CLEAR BOTTOM AND SIDES, 40mm CLEAR TOP.
CONCRETE SLABS-ON-GRADE, 25mm CLEAR TOP.
WALLS, 40mm CLEAR SIDES.
CONCRETE PIERS, 40mm CLEAR TO TIES.
CONCRETE BOND BEAMS. 20mm CLEAR TO TIES.

5. MINIMUM CONCRETE SPLICES AND HOOKS FOR REINFORCING STEEL SHALL CONFORM TO ACI 318, CURRENT EDITION.

6. CONCRETE WORK SHALL BE COORDINATED WITH DRAINS, UNDERGROUND UTILITIES, MECHANICAL, ELECTRICAL, AND ARCHITECTURAL PLANS. CONCRETE SHALL NOT BE CAST UNTIL THESE ITEMS HAVE BEEN INSTALLED AND ACCEPTED.

7. CONCRETE FINISHES SHALL BE PROVIDED AS DESCRIBED IN THE SPECIFICATIONS.

8. CORNER BARS SHALL BE PROVIDED AT ALL INTERSECTIONS; BAR SIZE AND SPACING TO MATCH LARGER BAR.

9. SLABS ON GRADE SHALL BE REINFORCED AT ALL PENETRATIONS AND RE-ENTRANT CORNERS. PLACE 3-ø10 x 1.0 METER AROUND FLOOR DRAINS. PLACE 2-ø12 x 1.0 METER (MINIMUM) AT RE-ENTRANT CORNERS.

STRUCTURAL STEEL:

1. STRUCTURAL STEEL SHALL BE FABRICATED AND ERECTED IN ACCORDANCE WITH THE AMERICAN INSTITUTE OF STEEL CONSTRUCTION, "SPECIFICATION FOR STRUCTURAL STEEL BUILDINGS", 1989 (AISC ASD MANUAL, 9TH EDITION).

2. STEEL SHALL CONFORM TO THE FOLLOWING REQUIREMENTS UNLESS NOTED OTHERWISE:

MISCELLANEOUS PLATES AND ANGLES - ASTM A36 (Fy = 36 KSI)
RECTANGULAR HSS - ASTM A500, GRADE B (Fy = 46 KSI)
"W" SHAPES - ASTM A992

3. NO STRUCTURAL STEEL SHALL BE FABRICATED OR ERECTED UNTIL SHOP DRAWINGS HAVE BEEN APPROVED.

4. NO HOLES OTHER THAN THOSE SPECIFICALLY DETAILED SHALL BE ALLOWED THROUGH STRUCTURAL STEEL MEMBERS. CUTTING OF STEEL SHALL NOT BE PERMITTED WITHOUT APPROVAL OF THE CONTRACTING OFFICER.

5. THE CONTRACTOR SHALL VERIFY ALL SHOP DRAWING DIMENSIONS WITH THE STRUCTURAL AND ARCHITECTURAL PLANS AND DETAILS, AND WITH FIELD DIMENSIONS OF COLUMN LAYOUT.

7. BOLTED CONNECTIONS SHALL BE MADE WITH HIGH STRENGTH BOLTS CONFORMING TO ASTM A325, 20mm DIAMETER MINIMUM UNLESS NOTED OTHERWISE.

8. CONNECTIONS NOT SHOWN ON DRAWINGS SHALL BE DESIGNED BY THE FABRICATOR. CONNECTIONS SHALL BE SELECTED TO SUPPORT ONE HALF THE TOTAL UNIFORM LOAD CAPACITY SHOWN IN THE ALLOWABLE LOAD TABLES, PART 2 OF LATEST AISC MANUAL FOR THE GIVEN BEAM, SPAN, AND GRADE OF STEEL SPECIFIED. WHERE POSSIBLE, DOUBLE ANGLE CONNECTIONS SHALL BE USED.

MASONRY:

1. ENGINEERED MASONRY IS DESIGNED IN ACCORDANCE WITH "BUILDING CODE REQUIREMENTS FOR MASONRY STRUCTURES" (ACI 530-99/ ASCE 5-99/TMS 402-99).

2. UNITS: ASTM C90, TYPE (I) (NORMAL WEIGHT, MOISTURE CONTROLLED) (OR EQUIVALENT DIN, ACI OR EN STANDARDS) MORTAR: ASTM C270 TYPE S (OR EQUIVALENT DIN, ACI OR EN STANDARDS)

3. FULLY GROUT ALL CELLS CONTAINING REINFORCING STEEL OR ANCHORS UNLESS NOTED OTHERWISE.

4. USE 50 db FULL CONTACT LAP SPLICES FOR REINFORCING STEEL IN CMU WALLS UNLESS NOTED OTHERWISE.

5. SEE SPECIFICATION 04200 FOR MASONRY BLOCK. ALL VERTICAL CELLS OF MASONRY BLOCK WITH REINFORCING SHALL BE GROUTED SOLID TO FORM A COMPOSITE MASONRY AND STEEL ASSEMBLY.

6. PROVIDE AN ADDITIONAL VERTICAL REINFORCEMENT AT EACH SIDE OF INTERSECTION OF EXTERIOR WALLS, AND AT EACH SIDE OF ALL MASONRY OPENINGS GREATER THAN 250mm IN WIDTH. IN OPENINGS WIDER THAN 600mm, PROVIDE ADDITIONAL VERTICAL REINFORCEMENT IN TWO ADJACENT CELLS ON EACH SIDE OF THE OPENING. ADDED VERTICAL REINFORCEMENT SHALL BE CONTINUOUS FOR THE FULL HEIGHT OF WALL.

7. PROVIDE BOND BEAMS AT 1200mm MAXIMUM VERTICAL SPACING

8. PROVIDE LINTEL ABOVE ALL MASONRY OPENINGS AS SHOWN IN DETAIL 3/SS-02.

9. PROVIDE A BOND BEAM BELOW ALL MASONRY OPENINGS AND EXTEND A MINIMUM OF 400mm BEYOND EACH SIDE OF OPENING.

TIMBER:

1. ALL TIMBER DESIGN AND CONSTRUCTION SHALL BE DONE IN ACCORDANCE WITH THE LATEST EDITION OF THE TIMBER CONSTRUCTION MANUAL OF THE AMERICAN INSTITUTE OF TIMBER CONSTRUCTION. ALL STRUCTURAL TIMBER MEMBERS SHALL HAVE THE FOLLOWING MINIMUM PROPERTIES:

A. BENDING	Fb = 74 Kg/CM (SINGLE MEMBER USE)
	Fb = 84 Kg/CM (REPETITIVE MEMBER USE)
B. TENSION	Ft = 49 Kg/CM (PARALLEL TO GRAIN)
C. SHEAR	Fv = 4 Kg/CM (HORIZONTAL SHEAR)
D. COMPRESSION	Fc = 21 Kg/CM (PERPENDICULAR TO GRAIN)
	Fc = 21 Kg/CM (PARALLEL TO GRAIN)
E. MODULUS OF ELASTICITY	E = 843,683 Kg/CM

1000 0 1000mm
SCALE: 1 = 50

UNLESS OTHERWISE NOTED, LINEAR DIMENSIONS SHOWN ARE IN MILLIMETERS.

SYMBOL	DESCRIPTION	DATE	APR

Designed By: A. PIERCE
Drawn By: A. PIERCE
Checked By: D. SMITH
Date: 10 MAY 2007
File No. AF0707
I.S.O. Sheet File Name: AF0707B-SS00DT.DWG
Solicitation Number: -

US Army Corps of Engineers Transatlantic Programs Center

ANA REGIONAL BRIGADE
PAKTIKA, AFGHANISTAN
DETENTION FACILITY

TYPICAL MASONRY DETAILS

SHEET REFERENCE NUMBER:
B-SS-00

$DATE$
$FILE$

D SIZE BORDER
32 X 20.5

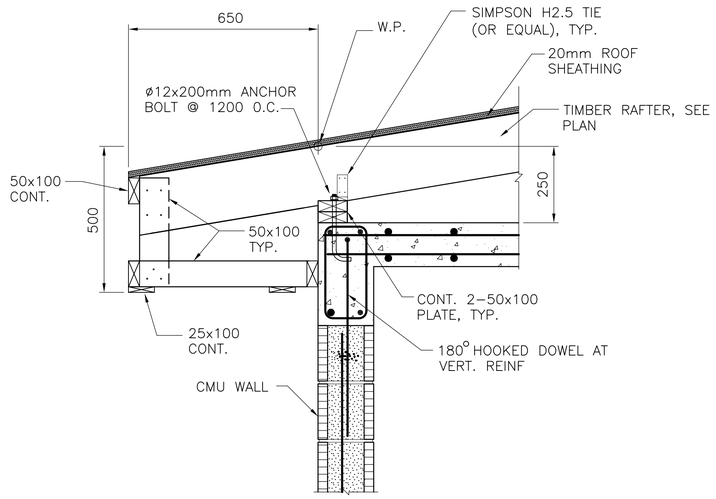

1 ROOF SECTION THROUGH EXTERIOR CMU WALL

B–S–03 REF. SCALE: 1:10

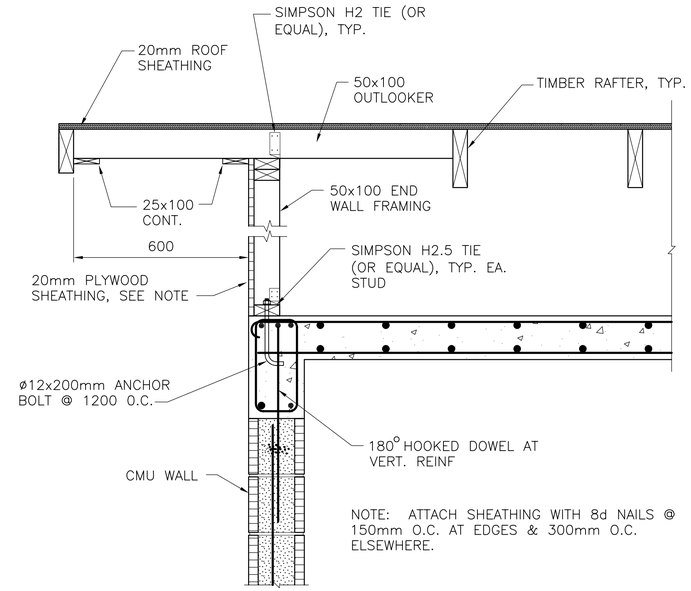

2 ROOF SECTION THROUGH EXTERIOR CMU WALL

B–S–03 REF. SCALE: 1:10

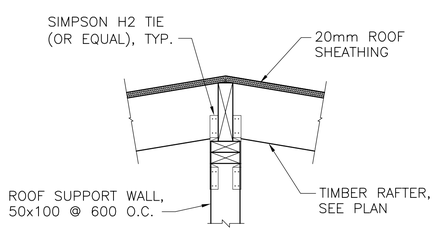

3 ROOF SECTION THROUGH RIDGE BEAM

B–S–03 REF. SCALE: 1:10

200 0 200mm
SCALE: 1 = 10

UNLESS OTHERWISE NOTED, LINEAR DIMENSIONS SHOWN ARE IN MILLIMETERS.

SYMBOL	DESCRIPTION	DATE	APR

Designed By: A. PIERCE
Drawn By: A. PIERCE
Checked By: M. THOMPSON
Date: 10 MAY 2007
File No. AF0707
I.S.O. Sheet File Name: AF07078–SF07SE.DWG
Solicitation Number: –

US Army Corps of Engineers Transatlantic Programs Center

ANA REGIONAL BRIGADE
PAKTIKA, AFGHANISTAN
DETENTION FACILITY

ROOF FRAMING SECTIONS

SHEET REFERENCE NUMBER:
B–S–07

$DATE$
$FILE$

D SIZE BORDER
32 X 20.5

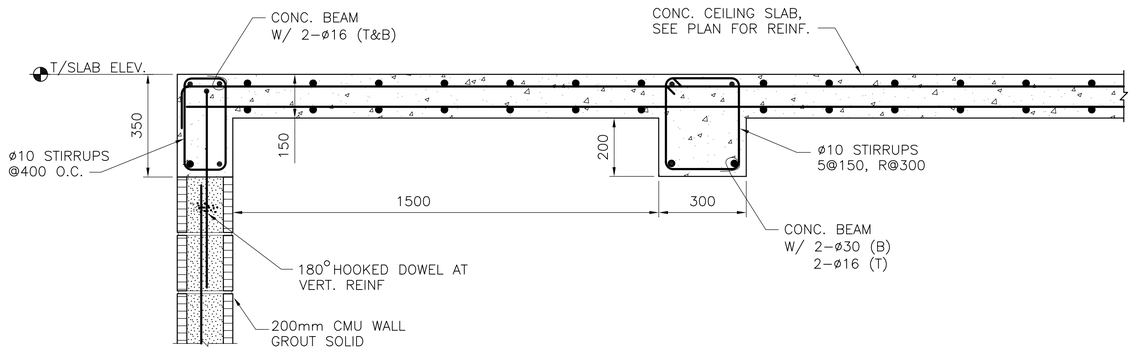

1 ROOF SECTION THROUGH EXTERIOR CMU WALL

B–S–02 REF. SCALE: 1:10

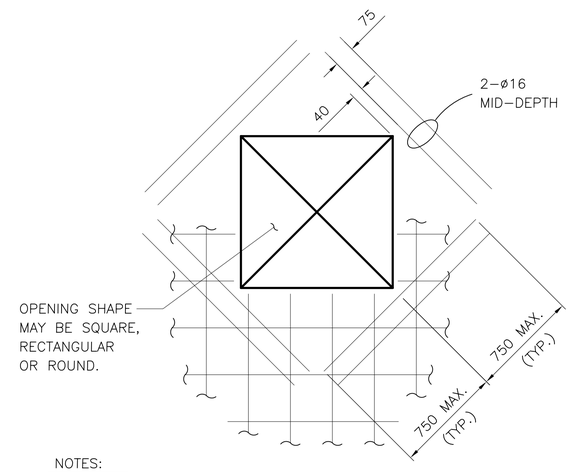

NOTES:

1. ALL TOP & BOTTOM SLAB BARS INTERRUPTED BY THE OPENING SHALL BE REPLACED WITH ADDITIONAL REINFORCING EQUAL TO THAT INTERRUPTED. PLACE HALF OF THE ADDITIONAL REINFORCING ON EACH SIDE OF OPENING AND EXTEND IT TO THE SAME LENGTH AS REQUIRED FOR THE INTERRUPTED REINFORCING.

2. BOXED OUT OPENINGS, RECESSED BOXES & PIPE SLEEVE CLUSTERS SHALL BE TREATED AS SLAB OPENINGS.

4 REINFORCING AROUND STRUCTURAL SLAB OPENING

B–S–02 REF. SCALE: 1:10

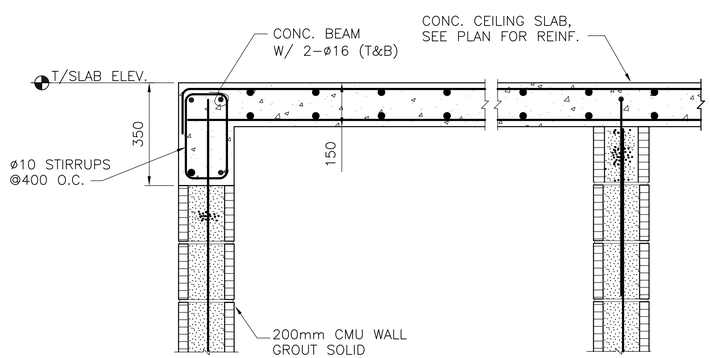

2 ROOF SECTION THROUGH EXTERIOR CMU WALL

B–S–02 REF. SCALE: 1:10

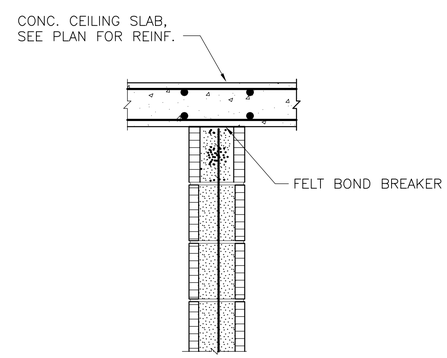

3 ROOF SECTION THROUGH INTERIOR CANTILEVERED CMU WALL

B–S–02 REF. SCALE: 1:10

200 0 200mm
SCALE: 1 = 10

UNLESS OTHERWISE NOTED, LINEAR DIMENSIONS SHOWN ARE IN MILLIMETERS.

SYMBOL	DESCRIPTION	DATE	APR

Designed By: A. PIERCE
Date: 10 MAY 2007
Drawn By: A. PIERCE
File No. AF0707
Checked By: M. THOMPSON
I.S.O. Sheet File Name: AF0707B–SF06SE.DWG
Solicitation Number: –

US Army Corps of Engineers
Transatlantic Programs Center

ANA REGIONAL BRIGADE
PAKTIKA, AFGHANISTAN
DETENTION FACILITY

CEILING SLAB
FRAMING SECTIONS

SHEET REFERENCE NUMBER:
B–S–06

$DATE$
$FILE$

D SIZE BORDER
32 X 20.5

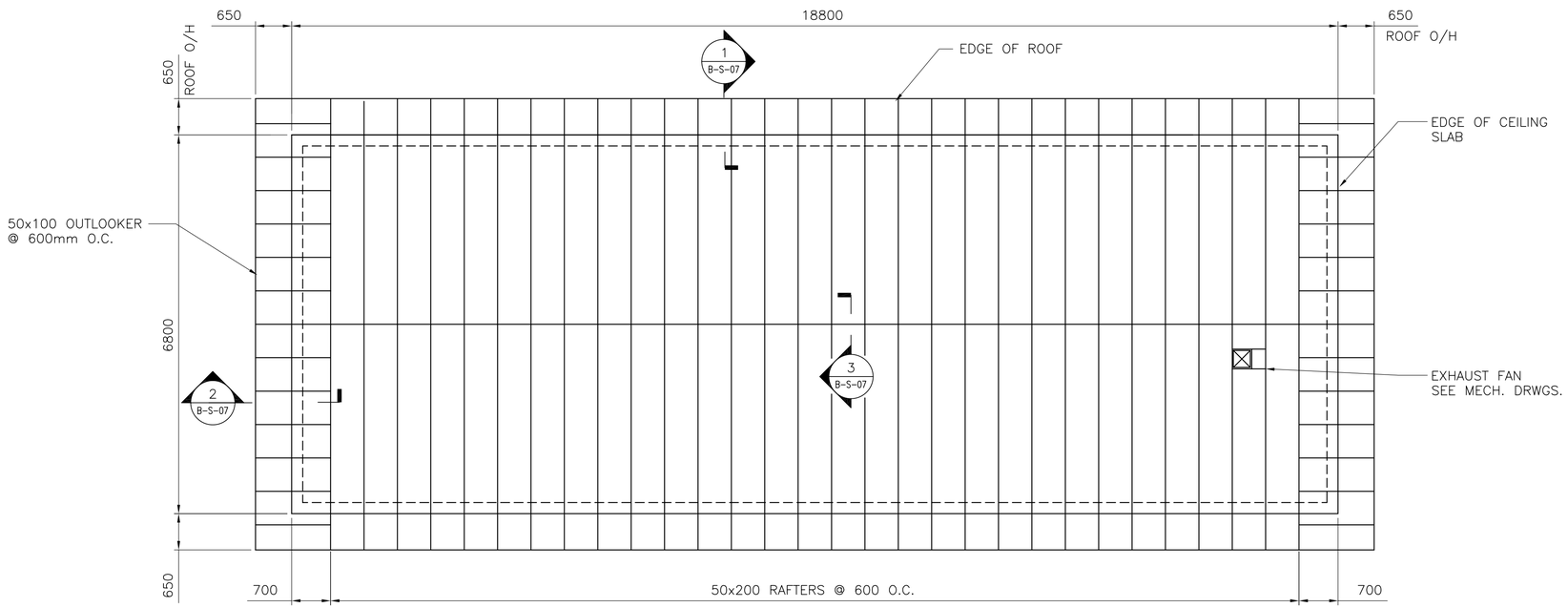

1 ROOF FRAMING PLAN

B-S-03 REF. SCALE: 1:50

1000 0 1000mm
SCALE: 1 = 50

UNLESS OTHERWISE NOTED, LINEAR DIMENSIONS SHOWN ARE IN MILLIMETERS.

SYMBOL	DESCRIPTION	DATE	APR

Designed By: A. PIERCE
Drawn By: A. PIERCE
Checked By: D. SMITH
Date: 10 MAY 2007
File No. AF0707
I.S.O. Sheet File Name: AF0707B-SF03PN.DWG
Solicitation Number: –

US Army Corps of Engineers Transatlantic Programs Center

ANA REGIONAL BRIGADE
PAKTIKA, AFGHANISTAN
DETENTION FACILITY

ROOF FRAMING PLAN

SHEET REFERENCE NUMBER:
B-S-03

$DATE$
$FILE$

D SIZE BORDER
32 X 20.5

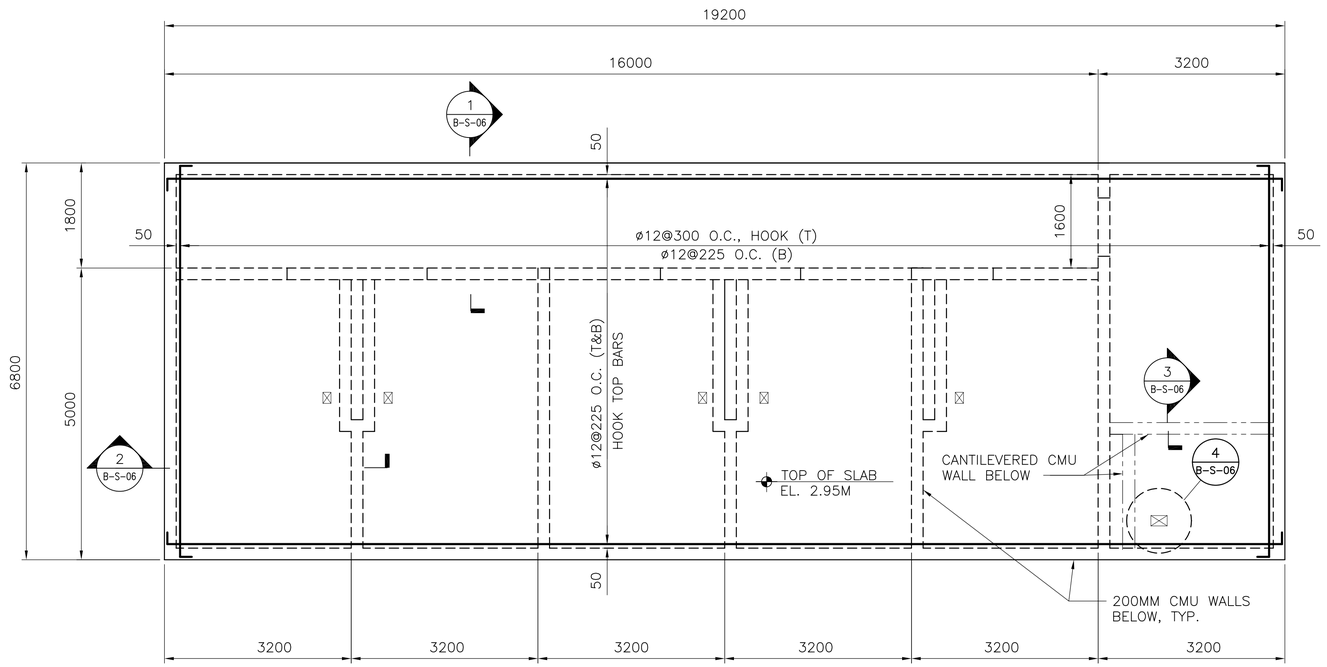

1 CEILING FRAMING PLAN

B-S-02 REF. SCALE: 1:50

1000 0 1000mm
SCALE: 1 = 50

UNLESS OTHERWISE NOTED, LINEAR DIMENSIONS SHOWN ARE IN MILLIMETERS.

SYMBOL	DESCRIPTION	DATE	APR

Designed By: A. PIERCE
Drawn By: A. PIERCE
Checked By: D. SMITH
Date: 10 MAY 2007
File No. AF0707
I.S.O. Sheet File Name: AF0707B-SF02PN.DWG
Solicitation Number: –

US Army Corps of Engineers Transatlantic Programs Center

ANA REGIONAL BRIGADE
PAKTIKA, AFGHANISTAN
DETENTION FACILITY

CEILING FRAMING PLAN

SHEET REFERENCE NUMBER:
B-S-02

$DATE$
$FILE$

D SIZE BORDER
32 X 20.5

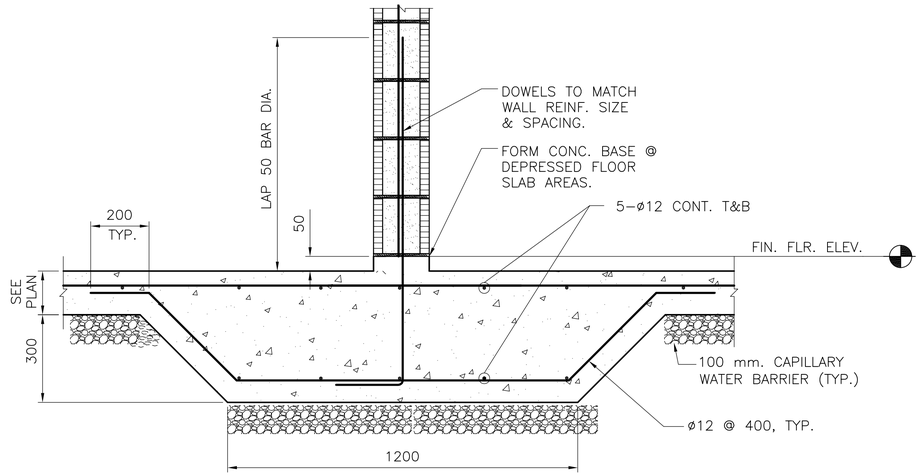

1 SECTION AT INTERIOR WALL

B-S-01 REF. SCALE: 1:10

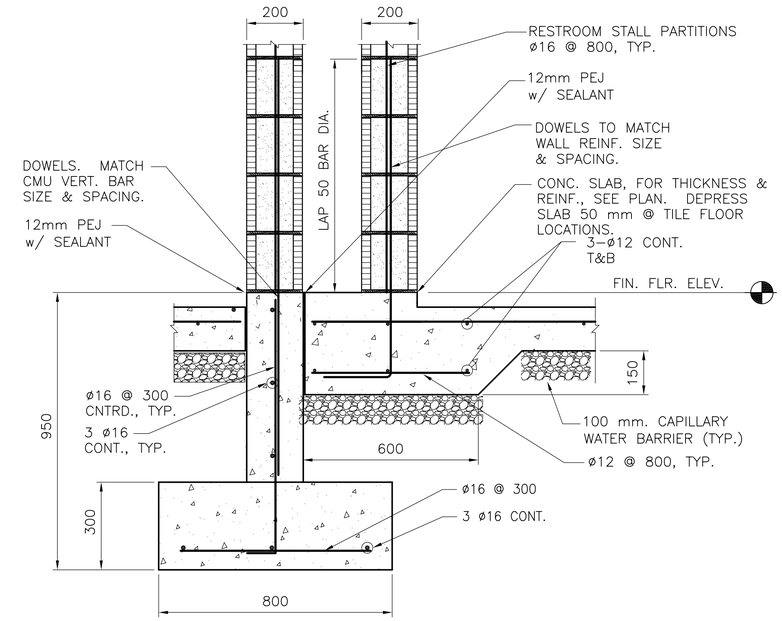

2 SECTION AT CHASE WALL

B-S-01 REF. SCALE: 1:10

UNLESS OTHERWISE NOTED, LINEAR DIMENSIONS SHOWN ARE IN MILLIMETERS.

SYMBOL	DESCRIPTION	DATE	APR

Designed By: D. SMITH
Drawn By: D. SMITH
Checked By: M. THOMPSON
Date: 10 MAY 2007
File No. AF0707
I.S.O. Sheet File Name: AF0707B–SB05SE.DWG
Solicitation Number: –

US Army Corps of Engineers Transatlantic Programs Center

ANA REGIONAL BRIGADE
PAKTIKA, AFGHANISTAN
DETENTION FACILITY

THICKENED SLAB SECTIONS

SHEET REFERENCE NUMBER:
B–S–05

$DATE$
$FILE$

D SIZE BORDER
32 X 20.5

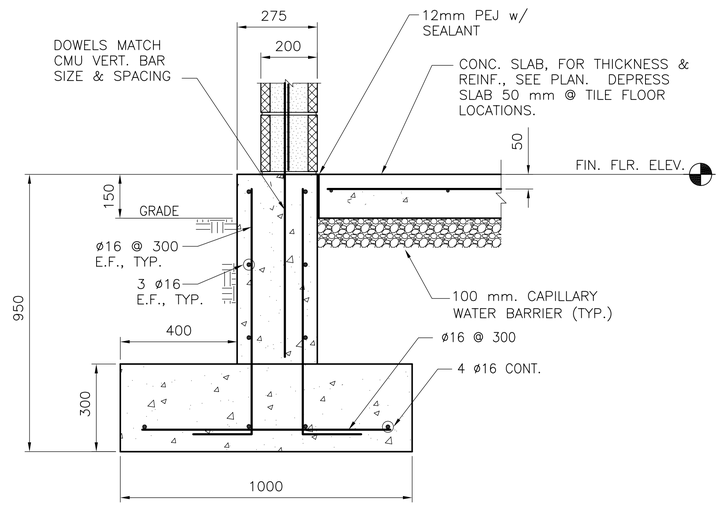

1 SECTION AT EXTERIOR CMU WALL

B-S-01 REF. SCALE: 1:10

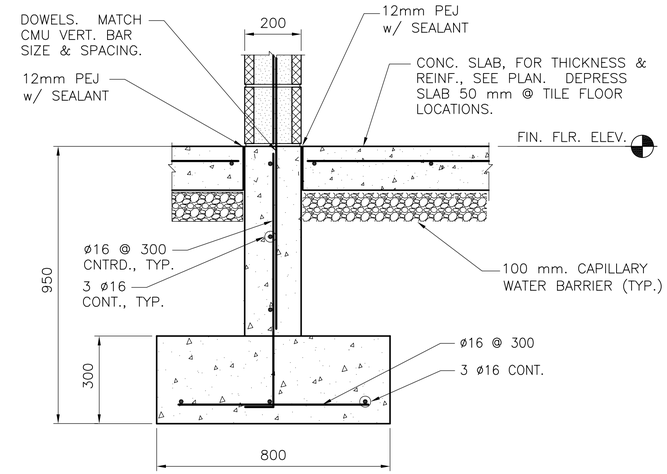

2 SECTION AT INTERIOR CMU WALL

B-S-01 REF. SCALE: 1:10

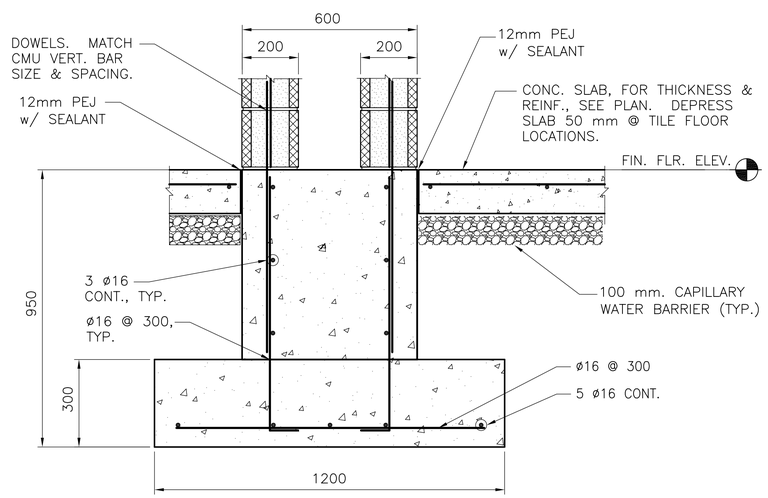

3 SECTION AT INTERIOR CHASE WALL

B-S-01 REF. SCALE: 1:10

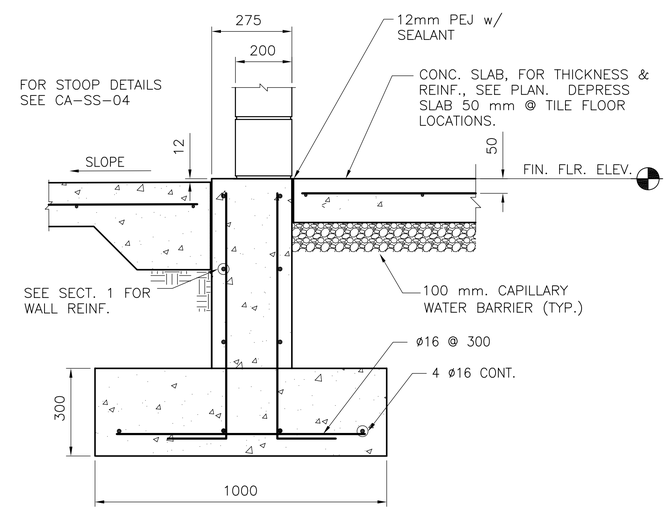

4 SECTION AT EXTERIOR DOOR

B-S-01 REF. SCALE: 1:10

200 0 200mm
SCALE: 1 = 10

UNLESS OTHERWISE NOTED, LINEAR DIMENSIONS SHOWN ARE IN MILLIMETERS.

SYMBOL	DESCRIPTION	DATE	APR

Designed By: A. PIERCE
Drawn By: D. SMITH
Checked By: M. THOMPSON
Date: 10 MAY 2007
File No. AF0707
I.S.O. Sheet File Name: AF0707B-SB04SE.DWG
Solicitation Number: –

US Army Corps of Engineers
Transatlantic Programs Center

ANA REGIONAL BRIGADE
PAKTIKA AFGHANISTAN
DETENTION FACILITY

FOUNDATION SECTIONS –

SHEET REFERENCE NUMBER:
B-S-04

$DATE$
$FILE$

D SIZE BORDER
32 X 20.5

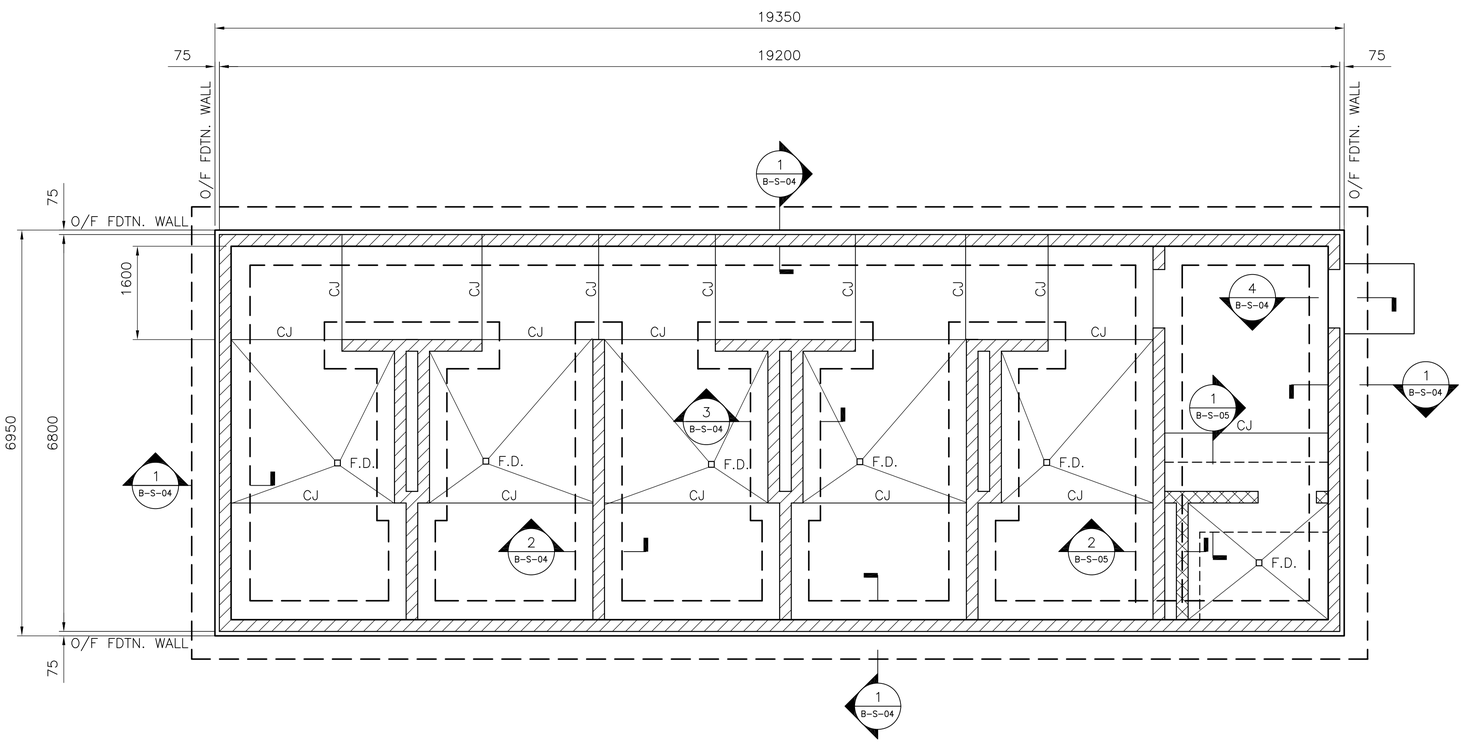

1 FOUNDATION PLAN

B-S-01 REF. SCALE: 1:50

SHEET NOTES:

1. CONT. UPPER BOND BEAM 200x200 W/ 2-ø12 CONT BARS TOP & BOT.

2. EXTERIOR AND INTERIOR LOADBEARING CMU WALL REINFORCEMENT SHALL BE ø16 @ 200 U.N.O. CMU LOADBEARING WALLS SHALL BE FULLY GROUTED

3. INTERIOR NON-LOADBEARING WALL REINFORCEMENT SHALL BE ø16 @600. GROUT CELLS CONTAINING VERTICAL REINFORCEMENT SOLID.

3. REFER TO SHEET B-SS-01 AND 02 FOR TYPICAL MASONRY DETAILS.

4. REFER TO SHEET B-SS-03 FOR TYPICAL SLAB ON GRADE DETAILS.

5. REFER TO SHEET B-SS-04 FOR TYPICAL EXTERIOR CONCRETE PAD DETAILS.

6. SLAB ON GRADE SHALL BE 150 MM CONCRETE ON A 100mm CAPILLARY WATER BARRIER. SEE SHEET B-SS-03 FOR TYPICAL SLAB REINFORCEMENT.

7. FOR WALL LOCATIONS, SEE ARCH DRAWINGS.

LEGEND:

CMU WALL ON SPREAD FOOTING INTREGTAL WITH CEILING SLAB

CANTILEVERED CMU WALL ON THICKENED SLAB; TOW AT EL. 2800

1000 0 1000mm
SCALE: 1 = 50

UNLESS OTHERWISE NOTED, LINEAR DIMENSIONS SHOWN ARE IN MILLIMETERS.

SYMBOL	DESCRIPTION	DATE	APR

Designed By: A. PIERCE
Drawn By: A. PIERCE
Checked By: D. SMITH
Date: 10 MAY 2007
File No. AF0707
I.S.O. Sheet File Name: AF0707B-SB01PN.DWG
Solicitation Number: -

US Army Corps of Engineers Transatlantic Programs Center

ANA REGIONAL BRIGADE
PAKTIKA, AFGHANISTAN
DETENTION FACILITY

FOUNDATION PLAN

SHEET REFERENCE NUMBER:
B-S-01

$DATE$
$FILE$

D SIZE BORDER
32 X 20.5

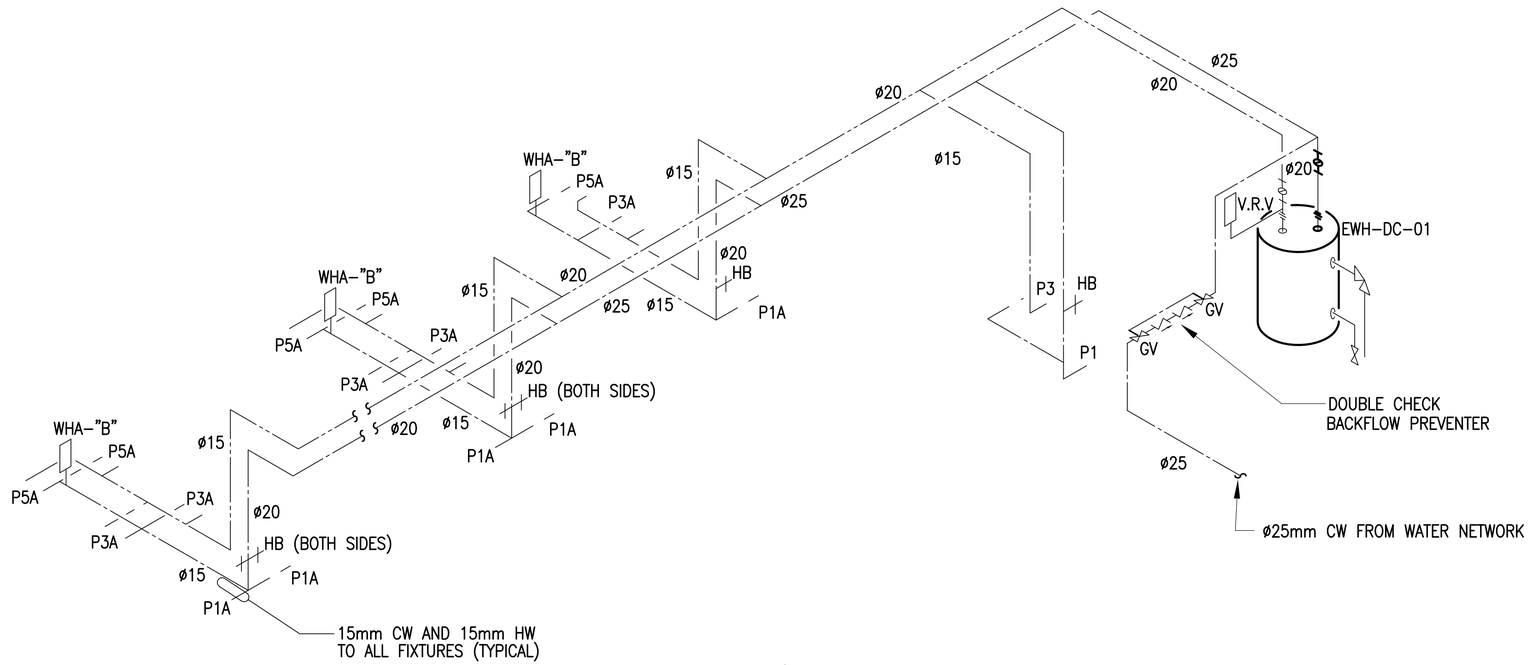

PLUMBING SUPPLY RISER

SCALE: NONE

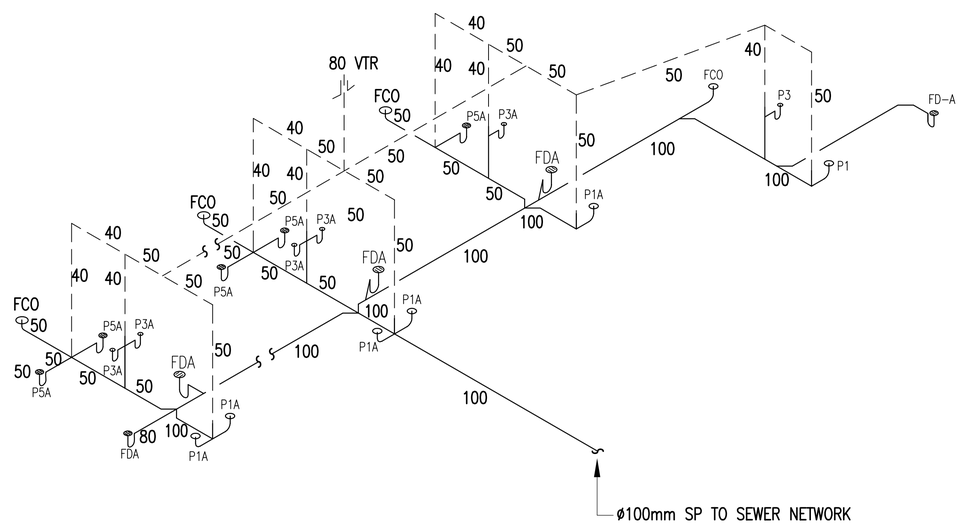

PLUMBING WASTE RISER

SCALE: NONE

UNLESS OTHERWISE NOTED, LINEAR DIMENSIONS SHOWN ARE IN MILLIMETERS.

SYMBOL	DESCRIPTION	DATE	APP.

Designed By:
Drawn By:
Checked By:
Date: 10 MAY 2007
File No. AF0707
I.S.O. Sheet File Name: AF0707B–MP02IS.dwg
Solicitation Number: –

US Army Corps of Engineers Transatlantic Programs Center

ANA REGIONAL BRIGADE
PAKTIKA, AFGHANISTAN
DETENTION FACILITY
PLUMBING RISERS
– –

SHEET REFERENCE NUMBER:
B–MP–02

$DATE$
$FILE$

D SIZE BORDER
32 X 20.5

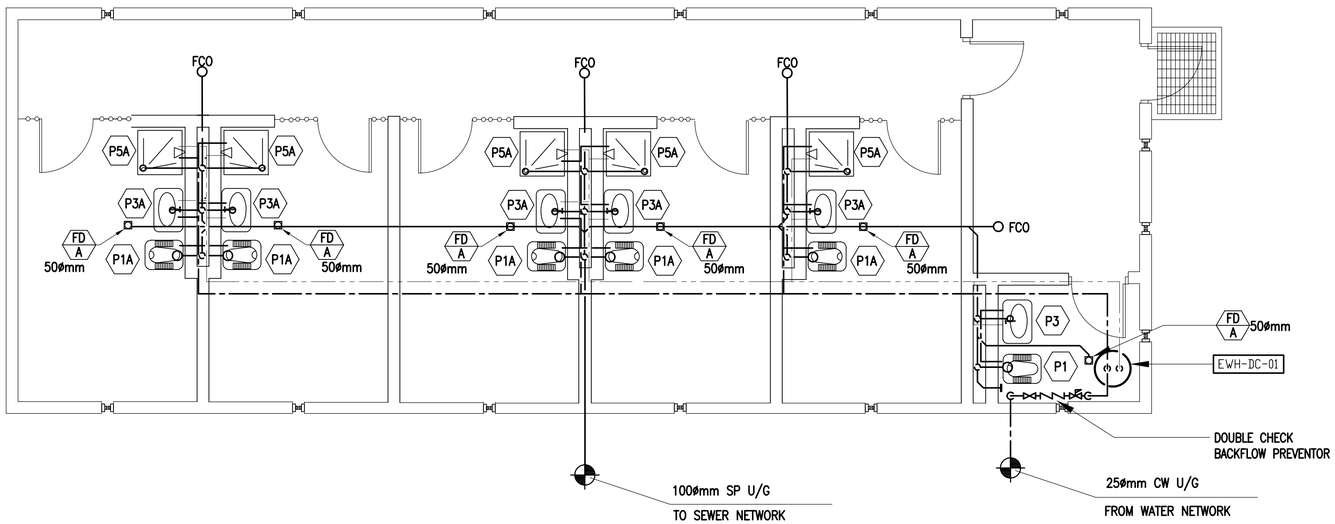

1 PLUMBING FLOOR PLAN

SCALE: 1:50

PLUMBING FIXTURE SCHEDULE

FIX. No.	SYMBOL	FIXTURE NAME	PLUMBING FIXTURE SCHEDULE C.W. MM	C.W. (INCHES)	H.W. MM	H.W. (INCHES)	WASTE MM	WASTE (INCHES)	VENT MM	VENT (INCHES)	REMARKS
P1		EASTERN WATER CLOSET*	15	(1/2")	–	–	100	(4")	50	(2")	
P1A		EASTERN WATER CLOSET*	15	(1/2")	–	–	100	(4")	50	(2")	NOTE 1
P3		LAVATORY (WALL HUNG)	15	(1/2")	15	(1/2")	40	(1 1/2")	40	(1 1/2")	
P3A		LAVATORY (WALL HUNG)	15	(1/2")	15	(1/2")	40	(1 1/2")	40	(1 1/2")	NOTE 2
P5		SHOWER	15	(1/2")	15	(1/2")	50	(2")	40	(1 1/2")	
P5A		SHOWER	15	(1/2")	15	(1/2")	50	(2")	40	(1 1/2")	NOTE 3

NOTES:
1. DESIGN BASED ON "METAKS MODEL 44.S507" STAINLESS STEEL SYSTEM.
2. DESIGN BASED ON "ACORN PENAL-WARE 1650FA-1-BP-4."
3. DESIGN BASED ON "ACORN PENAL-WARE 1730FA-4-CHV."
* – PROVIDE 15mm HOSE BIBB CONNECTION NEAR EASTERN STYLE TOILETS.

ELECTRIC WATER HEATER SCHEDULE

Ser No.	EWH Name	Capacity (Gallon)	Electrical Data	TEMPERATURE RISE	REMARKS
DETENTION CENTER (DC)					
30	EWH-DC-01	60 gal.	6KW/1PH/220V/50HZ	90F (50C)	

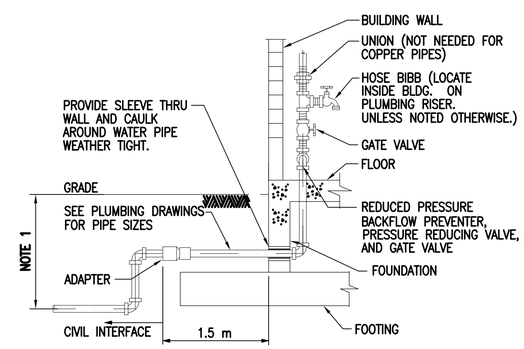

NOTE:
1. THE LEVEL OF WATER SUPPLY PIPE SHOULD BE MIN 800mm BELOW THE FINISH GRADE TO KEEP FROM FREEZING OTHER WISE ISULATION SHALL BE ADDED .

WATER SERVICE ENTRANCE DETAIL

SCALE: N.T.S

UNLESS OTHERWISE NOTED, LINEAR DIMENSIONS SHOWN ARE IN MILLIMETERS.

SYMBOL	DESCRIPTION	DATE	APP.

Designed By:
Drawn By:
Checked By:
Date: 10 MAY 2007
File No. AF0707
I.S.O. Sheet File Name: AF0707B-MP01PN.dwg
Solicitation Number: –

US Army Corps of Engineers Transatlantic Programs Center

ANA REGIONAL BRIGADE
PAKTIKA, AFGHANISTAN
DETENTION FACILITY
PLUMBING PLAN
– –

SHEET REFERENCE NUMBER:
B–MP–01

$DATE$
$FILE$

D SIZE BORDER
32 X 20.5

PLUMBING LEGEND

SYMBOL	DESCRIPTION
AV	ANGLE VALVE
BV	BALL VALVE
CV	CHECK VALVE
	COCK VALVE
DV	DRAIN VALVE
P7	EMERGENCY SHOWER AND EYE-WASH
FCO	FLOOR CLEANOUT
FD	FLOOR DRAIN
FS	FLOOR SIPHON
P13	FLOOR SINK (FS)
	GALITRAP (GT)
GV	GATE VALVE
HB	HOSE BIBB, PLAN
	INSPECTION MANHOLE
	PIPE TURNING DOWN
	PIPE TURNING UP
CO	PLUG CLEANOUT
	REDUCER-INCREASER
	SUPPORT LOCATION
	Y-TYPE STRAINER
U	UNION
VRV	VACUUM RELIEF VALVE
WHA	WATER HAMMER ARRESTOR

ABBREVIATION	DESCRIPTION
AC	AIR COMPRESSOR
℄	CENTER LINE
CA	COMPRESSED AIR
COYB	CLEANOUT IN YARD BOX
CW	COLD WATER PIPES
DT	DAY TANK
FOR	FUEL OIL RETURN
FOS	FUEL OIL SUPPLY
FT	FLASH TANK
H/L	HIGH LEVEL
HW	HOT WATER PIPES
IC	INSPECTION CHAMBER
I.L	INVERT LEVEL
LD	LEAK DETECTOR
L/L	LOW LEVEL
LSH	LEVEL SWITCH HIGH
LSHH	LEVEL SWITCH HIGH HIGH
LSL	LEVEL SWITCH LOW
LSLL	LEVEL SWITCH LOW LOW
LT	LEVEL TRANSMITTER
OW	OILY WASTE
OWS	OIL WATER SEPARATOR
P	PUMP
RP	RECIRCULATION PUMP
YCO	YARD CLEAN OUT
WOT	WASTE OIL STORAGE TANK
NT	NEUTRALIZATION TANK
GS	GREASE INTERCEPTOR

ABBREVIATION	DESCRIPTION
SP	SOIL PIPE
SR	SHORT RADIUS
U.G.	UNDER GROUND
VP	VENT PIPE
V.R.V	VACUUM RELIEF VALVE
WCO	WALL CLEANOUT
WHA	WATER HAMMER ARRESTOR
WO	WASTE OIL
WP	WASTE PIPE

LINE STYLE	DESCRIPTION
	COLD WATER (CW)
	HOT WATER (HW)
	VENT PIPE (VP)
	SOIL PIPE (SP)
	WASTE PIPE (WS)

EQUIPMENT IDENTIFICATION

EWH-XX-XX
- ELECTRIC WATER HEATER
- UNIT NUMBER
- BUILDING ABBREVIATION

NOTES:

1. INTERIOR SOIL AND WASTE PIPING 80 (3") AND SMALLER SHALL BE ROUTED WITH A 2% SLOPE. INTERIOR SOIL AND WASTE PIPING 100 (4") AND LARGER SHALL BE ROUTED WITH A MINIMUM 1% SLOPE.
2. EXTERIOR SOIL OR WASTE PIPING SHALL BE ROUTED WITH A 2% SLOPE WHEREVER POSSIBLE, OTHERWISE A MINIMUM SLOPE OF 1% SHALL BE USED.
3. WATER AND DRAINAGE PIPING SHALL BE EXTENDED 1.5 m OUTSIDE THE BUILDING UNLESS OTHERWISE INDICATED

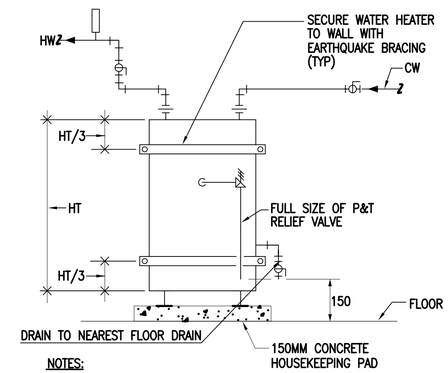

NOTES:
1-FOR PIPE SIZES SEE FLOOR PLAN.
2-FOR HEATER SELECTION SEE SCHEDULE TABLE
3-SECURE WATER HEATER TO FLOOR WITH EXPANSION BOLTS, 20mm (3/4")MIN.

ELECTRIC WATER HEATER PIPING DETAIL

SCALE: N.T.S

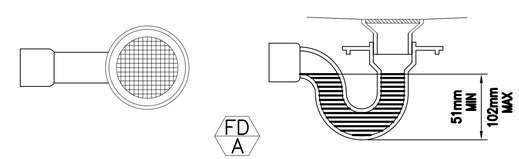

FLOOR DRAIN TYPE A

SCALE: N.T.S

UNLESS OTHERWISE NOTED, LINEAR DIMENSIONS SHOWN ARE IN MILLIMETERS.

SYMBOL	DESCRIPTION	DATE	APP

Designed By:
Drawn By:
Checked By:
Date: 10 MAY 2007
File No. AF0707
I.S.O. Sheet File Name: AF0707B-MP01GN.dwg
Solicitation Number: –

US Army Corps of Engineers Transatlantic Programs Center

ANA REGIONAL BRIGADE
PAKTIKA, AFGHANISTAN
DETENTION FACILITY

PLUMBING LEGEND AND DETAILS
–

SHEET REFERENCE NUMBER:
B-GP-01

$DATE$
$FILE$

D SIZE BORDER
32 X 20.5

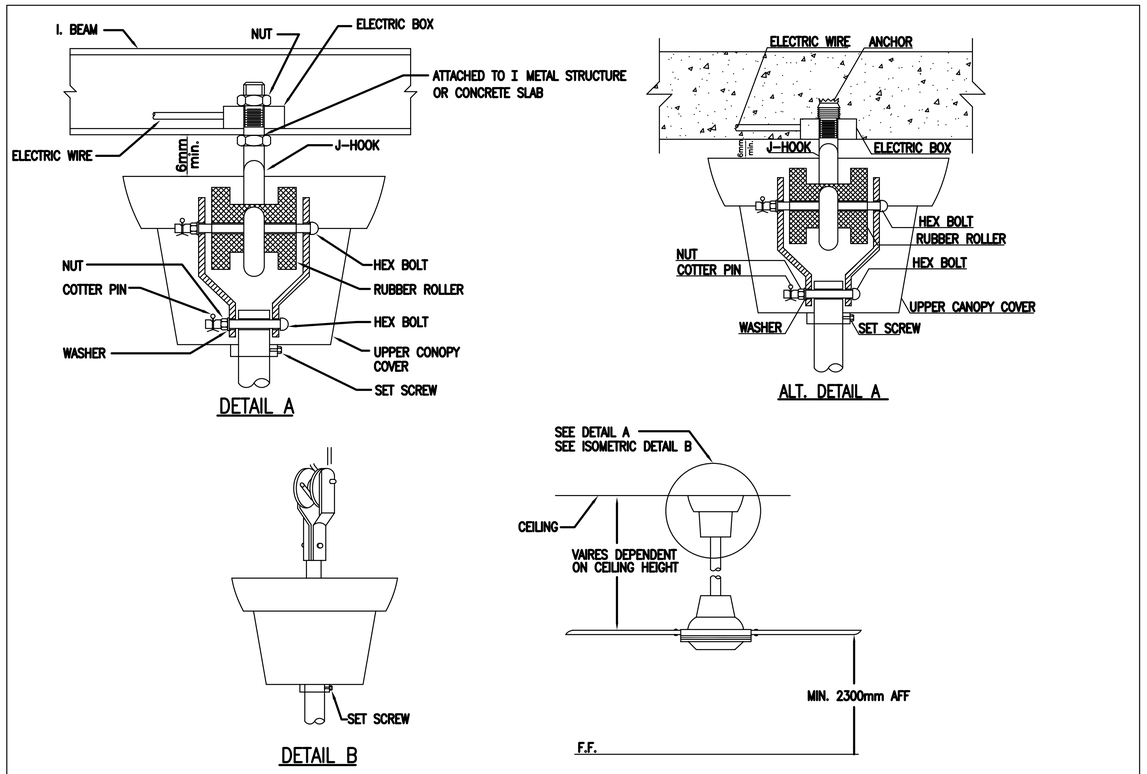

1 CEILING FAN MOUNTING DETAILS

SCALE: N.T.S

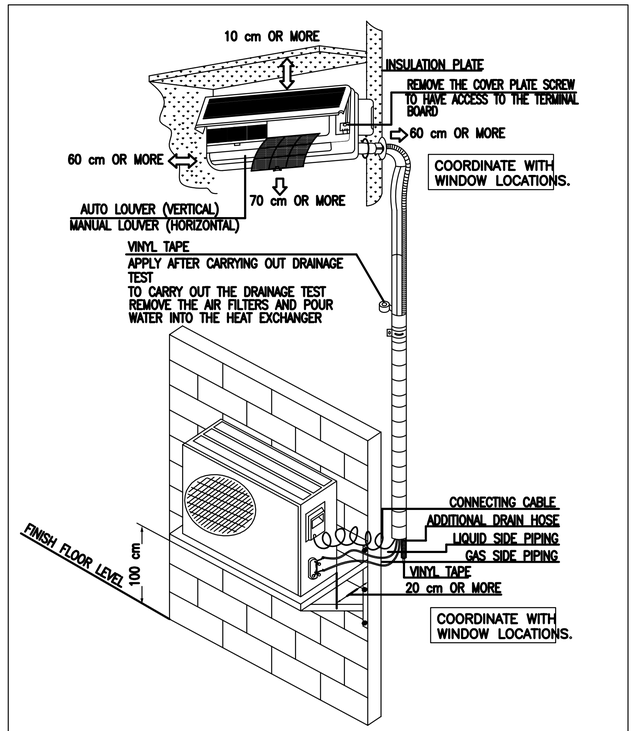

2 SPLIT UNIT INSTALLATION

SCALE: N.T.S

UNLESS OTHERWISE NOTED, LINEAR DIMENSIONS SHOWN ARE IN MILLIMETERS.

SYMBOL	DESCRIPTION	DATE	APP.

Designed By:
Date: 10 MAY 2007
Drawn By:
File No. AF0707
Checked By:
I.S.O. Sheet File Name: AF0707B-MH02CN.dwg
Solicitation Number: –

US Army Corps of Engineers Transatlantic Programs Center

ANA REGIONAL BRIGADE
PAKTIKA, AFGHANISTAN
DETENTION FACILITY
HVAC DETAILS
– –

SHEET REFERENCE NUMBER:
B–DM–01

$DATE$
$FILE$

D SIZE BORDER
32 X 20.5

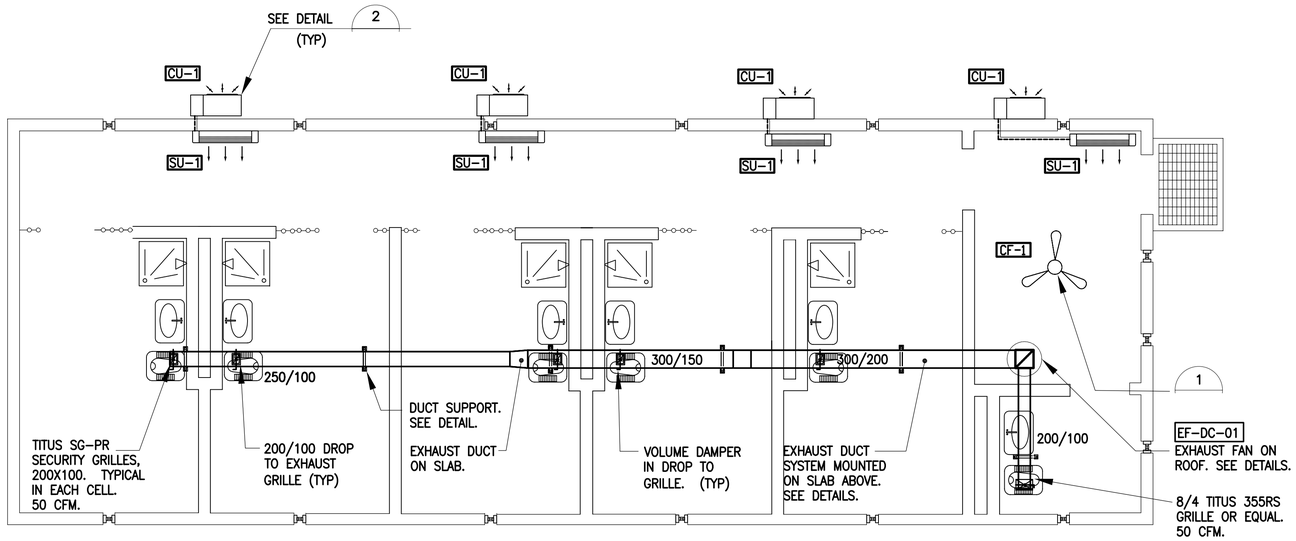

1 HVAC FLOOR PLAN

SCALE: 1:50

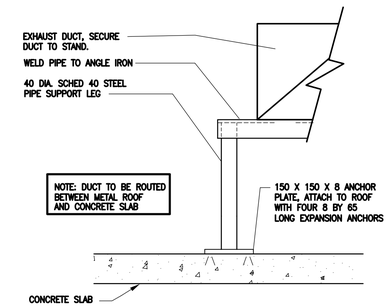

TYPICAL DUCT SUPPORT DETAIL

N.T.S.

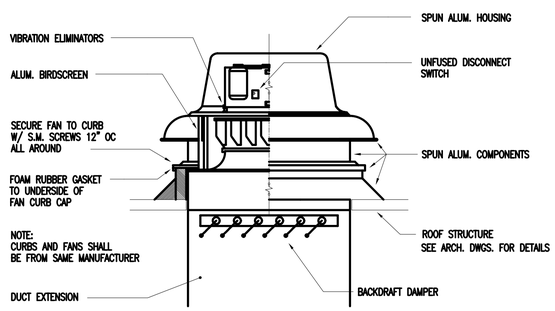

ROOF MOUNTED CENTRIFUGAL EXHAUST FAN DETAIL

N.T.S.

SPLIT SYSTEM AIR CONDITIONING UNIT SCHEDULE (SU) HEAT PUMP

UNIT NUMBER	COOLING CAPACITY TOTAL	AIR QUANTITY		ELECTRICAL DATA			HEATING CAPACITY 47 DEG F	ELECTRICAL CHARACTERISTICS		
	(BTUH)	CMH	CFM	VOLTS	PHASE	HERTZ	(BTUH)	INDOOR UNIT MCA	OUTDOOR UNIT MCA	ELECTRIC HEAT KW*
SU-1	12.000	520	305	220	1	50	12,800	1.2	12	2

*WITH SUPPLEMENTAL HEAT

CONDENSING UNITS SCHEDULE (CU)

UNIT NUMBER	ELECTRICAL DATA			REMARKS
	VOLTS	PHASE	HERTZ	
CU-1	220	1	50	--

EXHAUST FAN SCHEDULE (EF)

UNIT NUMBER	SERVICE	TYPE	AIR QUANTITY		MINIMUM WHEEL DIAMETER		FAN	STATIC PRESSURE		ELECTRICAL DATA				TEMP CONTROL DIAGRAM	INTERLOCK WITH	DRIVE TYPE	REMARKS
			CMH	CFM	MM	INCHES	RPM	mmH20	IN W.G.	H.P.	VOLTS	PHASE	HERTZ				
EF-DC-01	VENT	R-CTFG-GP	510	300	NA	NA	1050	6.35	0.25	1/20	220	1	50	E-4	SWITCH	DIRECT	NOTES 1, 2

MANUFACTURER SHALL PROVIDE NECESSARY TRANSFORMERS ON ALL UNITS TO MEET ELECTRICAL REQUIREMENT.
NOTE 1. SWITCH LOCATED IN GUARD'S OFFICE.
NOTE 2. ALL EXHAUST FANS WITH SINGLE PHASE POWER ARE TO BE PROVIDED w/ A FACTORY MOUNTED DISCONNECT SWITCH.

FAN SCHEDULE TYPE - LEGEND
(REF. EXHAUST AND SUPPLY FAN SCHEDULES)
R-CTFG-GP

R =ROOF
W =WALL
IL =INLINE
CL =CEILING

GP = GENERAL PURPOSE
EP = EXPLOSION PROOF
DB = DOWN BLAST
UB = UP BLAST
UT = UTILITY SET

CTFG = CENTRIFUGAL
PROP = PROPELLER
TUBA = TUBE AXIAL

CEILING FAN SCHEDULE (CF)

UNIT NUMBER	TYPE (NOTE 1)	FAN DIAMETER	MAX WATTS	ELECTRICAL DATA			REMARKS
				VOLTS	PHASE	HERTZ	
CF-1	WITH LIGHT	48 in	100	220	1	50	3-SPEED

NOTES:- 1- WITH LIGHT FIXTURE - (2) 13 WATT FLOURESCENT BULBS
2- BOTTOM OF FAN MOUNTING HEIGHT = MINIMUM 2500mm A.F.F
3- PROVIDE WITH REMOTE WALL MOUNTED, SWITCH LOCATED ADJACENT TO THERMOSTAT. SWITCH TO CONTROL FAN AND LIGHTS SEPERATELY.

UNLESS OTHERWISE NOTED, LINEAR DIMENSIONS SHOWN ARE IN MILLIMETERS.

SYMBOL	DESCRIPTION	DATE	APR

Designed By:
Drawn By:
Checked By:
Date: 10 MAY 2007
File No. AF0707
I.S.O. Sheet File Name: AF0707B-MH01PN.dwg
Solicitation Number: -

US Army Corps of Engineers Transatlantic Programs Center

ANA REGIONAL BRIGADE
PAKTIKA, AFGHANISTAN
DETENTION FACILITY
PLUMBING PLAN
- -

SHEET REFERENCE NUMBER:
B-MH-01

$DATE$
$FILE$

D SIZE BORDER
32 X 20.5

ABBREVIATIONS

ABV. CLG	:–	ABOVE CEILING
AFF	:–	ABOVE FINISH FLOOR
AHU	:–	AIR HANDLING UNIT
AMPS	:–	AMPERES
B.D	:–	BACKDRAFT DAMPER
B.H	:–	BASE BOARD HEATER
B.M.O	:–	BELL MOUTH OPENING
BOP	:–	BOTTOM OF PIPE
BTU/H	:–	BRITISH THERMAL UNITS PER HOUR
CD	:–	CONDENSATE DRAIN
CF	:–	CEILING FAN
C.F.M	:–	CUBIC FEET PER MINUTE
C.M.H	:–	CUBIC METER PER HOUR
CONN	:–	CONNECTION
CORR	:–	CORRUGATED
CU	:–	CONDENSING UNIT
DB	:–	DRY BULB
DH	:–	DIESEL UNIT HEATER
DIA	:–	DIAMETER
D.L	:–	DOOR LOUVER
DT	:–	DAY TANK
DWG	:–	DRAWING
EF	:–	EXHAUST FAN
EL	:–	EXHAUST LOUVER
ENT	:–	ENTERING
EXH.G	:–	EXHAUST GRILLE
EXT	:–	EXTERNAL
F.A.D	:–	FRESH AIR DUCT
FD	:–	FIRE DAMPER
FLA	:–	FULL LOAD AMPERES
FOR	:–	FUEL OIL RETURN
FO	:–	FUEL OIL
FOS	:–	FUEL OIL SUPPLY
FPM	:–	FEET PER MINUTE
FT	:–	FEET
GALV	:–	GALVANIZED
HP	:–	HORSE POWER
KW	:–	KILO WATTS
LD	:–	LEAK DETECTOR
L/S	:–	LITERS PER SECOND
LT	:–	LEVEL TRANSMITTER

ABBREVIATIONS

LVG	:–	LEAVING
MRAD	:–	MOTORIZED RETURN (RECIRCULATION)
MAID	:–	MOTORIZED AIR INTAKE DAMPER
MEAD	:–	MOTORIZED EXHAUST AIR DAMPER
M.D	:–	MOTORIZED DAMPER
mm	:–	MILLIMETERS
MPS	:–	METERS PER SECOND
NC	:–	NORMALLY CLOSED
NO	:–	NORMALLY OPEN
OC	:–	ON CENTERS
OSA	:–	OUTSIDE AIR
P	:–	PUMP
PACU	:–	PACKAGE AIR CONDITIONING UNIT
P.S	:–	POWER SUPPLY
R.C.D	:–	RETURN CEILING DIFFUSER
R.D	:–	RETURN AIR DUCT
RED	:–	REDUCTION/REDUCER
R.G	:–	RETURN GRILLE
RPM	:–	REVOLUTIONS PER MINUTE
RS	:–	REFRIGERANT SUCTION
RL	:–	REFRIGERANT LIQUID
S.C.D	:–	SUPPLY CEILING DIFFUSER
S.D	:–	SUPPLY DUCT
SF	:–	SUPPLY FAN
S.G	:–	SUPPLY GRILLE
SM.D	:–	SMOKE DETECTOR
SP	:–	STATIC PRESSURE
SQ	:–	SQUARE
SR	:–	SHORT RADIUS
S.R–X	:–	SUPPLY REGISTER TYPE–X
SS	:–	STAINLESS STEEL
SU	:–	SPLIT UNIT
T	:–	SPACE THERMOSTAT
T.G	:–	TRANSFER GRILLE
TOS	:–	TOP OF SUPPORT
TYP	:–	TYPICAL
U.C	:–	UNDER CUT
UH	:–	UNIT HEATER
V.D	:–	VOLUME DAMPER
WB	:–	WET BULB
WG	:–	WATER GAGE

SYMBOLS

S	:–	SWITCH
T	:–	THERMOSTAT
T	:–	TEMPERATURE SENSOR
M	:–	MOTORIZED DAMPER
CO	:–	CARBON MONOXIDE SENSOR
	:–	CEILING FAN
	:–	THRU WALL EXHAUST FAN
	:–	BASE BOARD HEATER
	:–	UNIT HEATER
	:–	DIESEL UNIT HEATER
	:–	OUTSIDE INTAKE LOUVER
	:–	GRAVITY RIDGE VENT
	:–	EXHAUST ROOF FAN
	:–	SUPPLY ROOF FAN
	:–	SPLIT UNIT
	:–	CONDENSING UNIT
F.F.L xx	:–	FINISH FLOOR LEVEL IN (m) MEASURED FROM REFRENCE +0.00 LEVEL
	:–	SUPPLY SECTION FAN
	:–	FIRE DAMPER
	:–	VOLUME DAMPER
	:–	DOOR LOUVER
	:–	UNDER CUT

DUCTWORK

	SUPPLY AIR DIFFUSER – ARROWS INDICATE PATTERN. NO PATTERN SHOWN EQUALS 4–WAY.
	RETURN AIR GRILLE
	EXHAUST GRILLE
	SUPPLY AIR SLOT
	RETURN AIR SLOT
	ROUND DUCTWORK. DIAMETER INDICATED IN MILLIMETER
	RECTANGULAR DUCTWORK. SIZE INDICATED IN INCHES, FIRST NUMBER IS SIDE SHOWN.
	FLEXIBLE DUCT
	SUPPLY OR OUTSIDE AIR DUCT
	RETURN AIR DUCT.
	RELIEF OR EXHAUST AIR DUCT.
	90 DEGREE DUCTWORK ELBOW.
	RADIUS DUCTWORK ELBOW – ROUND OR RECTANGULAR.
	RECTANGULAR DUCTWORK BRANCH TAKE–OFF WITH 45 DEGREE BRANCH INLET.
	FLARED SPIN–IN WITH DAMPER AND FLEX DUCT (DIFFUSER CONNECTION).
	ROUND DUCT BRANCH TAKE–OFF FROM RECTANGULAR MAIN WITH CONICAL TAP.
	DUCTWORK SIZE TRANSITION.
12	DUCT PRESSURE CLASS. POINT OF CHANGE IN DUCT CONSTRUCTION.
	FLEXIBLE DUCT CONNECTION
	SUPPLY OR OUTSIDE AIR DUCT UP
	SUPPLY OR OUTSIDE AIR DUCT DOWN
	RETURN AIR DUCT UP
	RETURN AIR DUCT DOWN
	RELIEF OR EXHAUST AIR DUCT UP
	RELIEF OR EXHAUST AIR DUCT DOWN
	IN–LINE 90 DEGREE DROP (RISE) IN DUCT
UP	INCLINED RISE IN DUCT
DN	INCLINED DROP IN DUCT

NOTES:

1– ALL DIMENSIONS ARE IN MM UNLESS OTHERWISE NOTED.

2– DUCT DIMENSION INDICATES INSIDE DIMENSIONS.

3– EXACT LOCATIONS OF POWER SUPPLY POINTS, CONTROL PANEL AND MOTOR SWITCH TO BE TAKEN FROM ELECTRICAL DESIGN DRAWINGS.

4– THERMOSTAT HEIGHT IS 1525mm ABOVE F.F.L.

5– ALL EXTERIOR SUPPLY DUCTS WILL BE INSULATED WITH 50 mm THICK. MINERAL FIBER AND SHALL BE COVERED WITH METAL CLADDING.

6– ALL MENTIONED HEIGHTS ARE MEASURED FROM F.F.L.

7– INSULATE ALL THE SUPPLY DUCT WITH 50mm(2") INSULATION THICKNESS, 16kg/m³ FIBERGLASS.

EQUIPMENT IDENTIFICATION

XX–XX–XX

- UNIT NUMBER
- BUILDING ABBREVIATION
- EQUIPMENT TYPE

	TURNING VANES
	DUCT EXTRACTOR
	SPLITTER DAMPER
AD	ACCESS DOOR

UNLESS OTHERWISE NOTED, LINEAR DIMENSIONS SHOWN ARE IN MILLIMETERS.

SYMBOL	DESCRIPTION	DATE	APP.

Designed By:
Drawn By:
Checked By:
Date: 10 MAY 2007
File No. AF0707
I.S.O. Sheet File Name: AF0707B–MH01GN.dwg
Solicitation Number: –

US Army Corps of Engineers Transatlantic Programs Center

ANA REGIONAL BRIGADE
PAKTIKA, AFGHANISTAN
DETENTION FACILITY

HVAC LEGEND

SHEET REFERENCE NUMBER:
B–GM–01

$DATE$
$FILE$

D SIZE BORDER
32 X 20.5

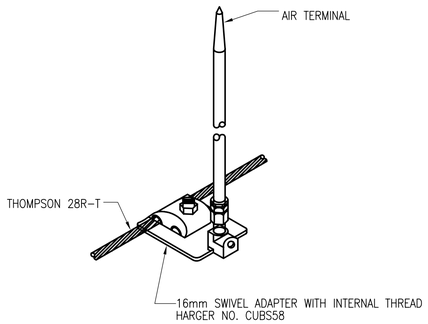

1 AIR TERMINAL MOUNTING DETAIL

SCALE: N.T.S

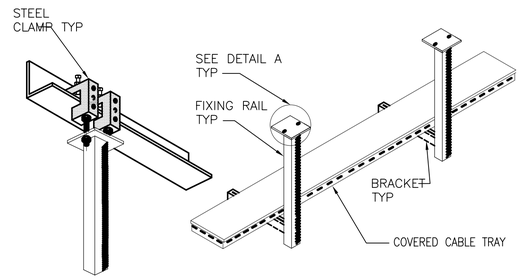

2 CABLE TRAY SUPPORT DETAIL

SCALE: N.T.S

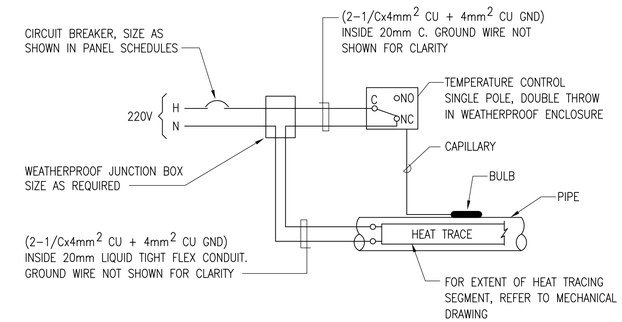

3 HEAT TRACE CONTROL DIAGRAM

SCALE: N.T.S

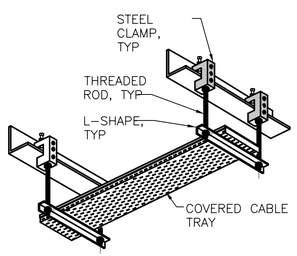

4 CABLE TRAY SUPPORT DETAIL

SCALE: N.T.S

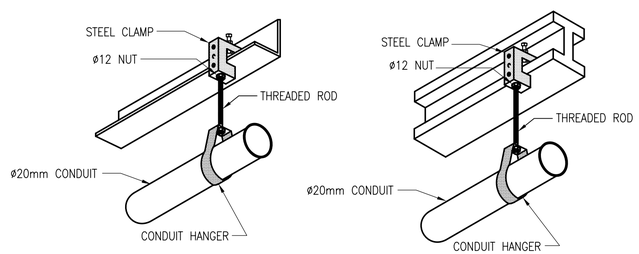

5 SUPPORT OF CONDUIT FROM STEEL STRUCTURE

SCALE: N.T.S

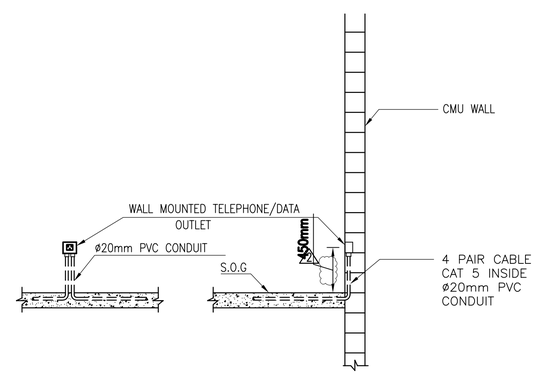

6 GENERAL INSTALLATION DETAIL FOR RECESSED TELEPHONE/ DATA OUTLET (CONDUIT EMBEDDED IN SLAB)

SCALE: N.T.S

UNLESS OTHERWISE NOTED, LINEAR DIMENSIONS SHOWN ARE IN MILLIMETERS.

SYMBOL	DESCRIPTION	DATE	APR

Designed By:
Drawn By:
Checked By:
Date: 10 MAY 2007
File No. AF0707
I.S.O. Sheet File Name: AF0707B-EL03D1.dwg
Solicitation Number: –

US Army Corps of Engineers Transatlantic Programs Center

ANA REGIONAL BRIGADE
PAKTIKA, AFGHANISTAN
DETENTION FACILITY

ELECTRICAL DETAILS

SHEET REFERENCE NUMBER:
B-DE-03

$DATE$
$FILE$

D SIZE BORDER
32 X 20.5

LIGHTING FIXTURE SCHEDULE

TYPE	DESCRIPTION	NO. OF LAMPS	LAMP TYPE	WATTS PER LAMP	VOLTAGE	MOUNTING
A	PENDANT MOUNTED INDUSTRIAL FLUORESCENT LIGHT FIXTURE WITH WIDE DISTRIBUTION REFLECTOR KIT	2	T8	36	220/50HZ	PENDANT
A1	SURFACE MOUNTED INDUSTRIAL FLUORESCENT LIGHT FIXTURE WITH WIDE DISTRIBUTION REFLECTOR KIT	2	T8	36	220/50HZ	SURFACE
B	SURFACE/PENDANT MOUNTED PRISTMIC REFLECTOR	2	T8	36	220/50HZ	SURFACE/PENDENT
B1	SURFACE MOUNTED VIRTUALLY UNBREAKABLE DIFFUSER, SOLID STEEL BODY AND FRAME, HIGH SECURITY STAINLESS BOLTS	2	T8	36	220/50HZ	SURFACE/PENDENT
C	PENDANT MOUNTED FLUORESCENT LIGHT FIXTURE WITH REFLECTOR AND ACRYLIC LENS	4	T8	36	220/50HZ	PENDANT
C1	SURFACE MOUNTED FLUORESCENT LIGHT FIXTURE WITH REFLECTOR AND ACRYLIC LENS	4	T8	36	220/50HZ	SURFACE
D	SURFACE/PENDANT MOUNTED FIXTURE SPECIAL FOR WET LOCATION	2	T8	40	220/50HZ	SURFACE
E	SURFACE/WALL MOUNTED FIXTURE SPECIAL FOR WET LOCATION	2	T8	36	220/50HZ	SURFACE OR WALL
F	WALL MOUNTED COMPACT FLUOR.	1	CF	26	220/50HZ	WALL
G	PENDANT MOUNTED INDUSTRIAL LOW BAY FIXTURE	1	HPS	150	220/50HZ	PENDANT
G1	PENDANT MOUNTED INDUSTRIAL HIGH BAY FIXTURE	1	HPS	150	220/50HZ	PENDANT
G2	PENDANT MOUNTED INDUSTRIAL LOW BAY FIXTURE	1	HPS	250	220/50HZ	PENDANT
J	EXPLOSION PROOF SURFACE MOUNTED FLUOR. FIXTURE	2	INCLUDED	36	220/50HZ	SURFACE
X1	EXIT SIGN WITH DIRECTIONAL ARROWS AS REQUIRED	2	INCLUDED	8	220/50HZ	UNIVERSAL
X2	EMERGENCY FIXTURE WITH HALOGEN LAMPS	2	HALOGEN	20	220/50HZ	WALL/SURFACE
X3	EXPLOSION PROOF EMERGENCY FIXTURE WITH HALOGEN LAMPS	2	HALOGEN	14	220/50HZ	WALL/SURFACE

BRANCH CIRCUITS WIRE SCHEDULE

220 VOLT 1ø, 3W. CIRCUITS

CIRCUIT BREAKER	CONDUCTOR
20A–1P	2 #4mm² & 1 #4mm² GND. – 20mm C.
30A–1P	2 #6mm² & 1 #6mm² GND. – 20mm C.
40A–1P	2 #10mm² & 1 #6mm² GND. – 20mm C.
50A–1P	2 #16mm² & 1 #6mm² GND. – 25mm C.
60A–1P	2 #25mm² & 1 #10mm² GND. – 25mm C.
80A–1P	2 #35mm² & 1 #10mm² GND. – 25mm C.
100A–1P	2 #50mm² & 1 #10mm² GND. – 32mm C.

380 VOLT, 3ø, 4W. CIRCUITS

20A–3P	3 #4mm² & 1 #4mm² GND. – 20mm C.
30A–3P	3 #6mm² & 1 #6mm² GND. – 20mm C.
40A–3P	3 #10mm² & 1 #6mm² GND. – 20mm C.
50A–3P	3 #16mm² & 1 #6mm² GND. – 38mm C.
60A–3P	3 #25mm² & 1 #10mm² GND. – 38mm C.
80A–3P	3 #35mm² & 1 #10mm² GND.–38mmC.
100A–3P	3 #50mm² & 1 #10mm² GND.–40mmC.

380 VOLT, 3ø,5W. CIRCUITS

20A–3P	4 #4mm² & 1 #4mm² GND. – 20mm C.
30A–3P	4 #6mm² & 1 #6mm² GND. – 20mm C.
40A–3P	4 #10mm² & 1 #6mm² GND. – 32mm C.
50A–3P	4 #16mm² & 1 #6mm² GND. – 38mm C.
60A–3P	4 #25mm² & 1 #10mm² GND. – 38mm C.

NOTE:

1. TYPE MC CABLE SHALL INCLUDE FULL SIZE INSULATED GROUND CONDUCTOR. SIZES AS INDICATED IN SCHEDULE.

UNLESS OTHERWISE NOTED, LINEAR DIMENSIONS SHOWN ARE IN MILLIMETERS.

SYMBOL	DESCRIPTION	DATE	APP.

Designed By:
Drawn By:
Checked By:
Date: 10 MAY 2007
File No. AF0707
I.S.O. Sheet File Name: AF0707B-EL02CN.dwg
Solicitation Number: –

US Army Corps of Engineers Transatlantic Programs Center

ANA REGIONAL BRIGADE
PAKTIKA, AFGHANISTAN
DETENTION FACILITY

ELECTRICAL
FIXTURE SCHEDULE
AND BRANCH CIRCUIT

SHEET REFERENCE NUMBER:
B–GE–02

$DATE$
$FILE$

D SIZE BORDER
32 X 20.5

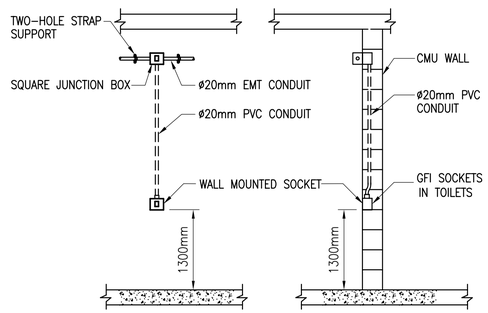

1 GENERAL INSTALLATION DETAIL FOR RECESSED SURFACE MOUNTED SOCKET IN TOILETS

SCALE: N.T.S

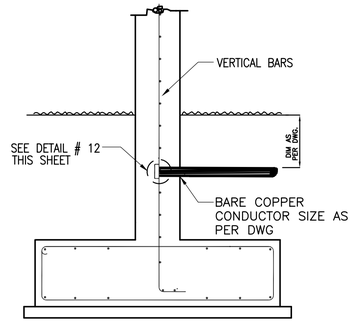

2 TYPICAL STRUCTURAL BONDING DETAIL

SCALE: N.T.S

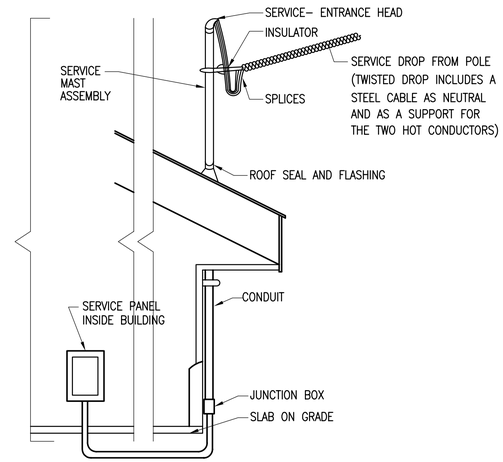

3 PANEL BOARD FEEDING FROM BOTTOM (FOR PANELS NOT IN EXTERIOR WALL)

SCALE: N.T.S.

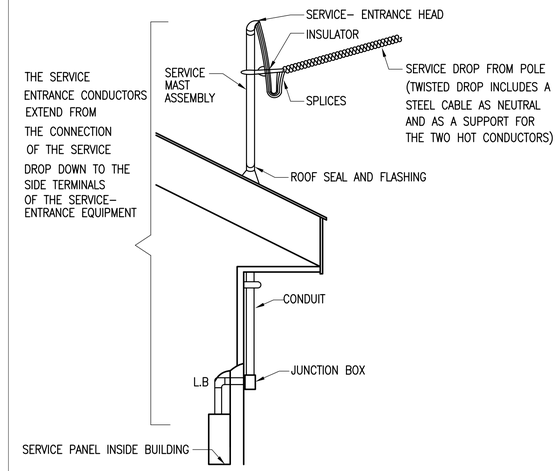

4 PANEL BOARD FEEDING FROM TOP (FOR PANELS ON EXTERLOR WALL)

SCALE: N.T.S.

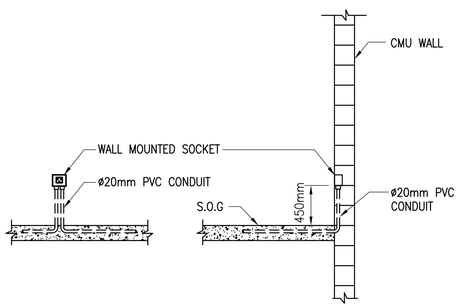

5 GENERAL INSTALLATION DETAIL FOR RECESSED SOCKET (CONDUIT EMBEDDED IN SLAB)

SCALE: N.T.S

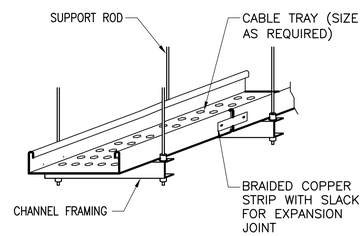

6 CABLE TRAY CROSSING EXPANSION JOINT

SCALE: N.T.S

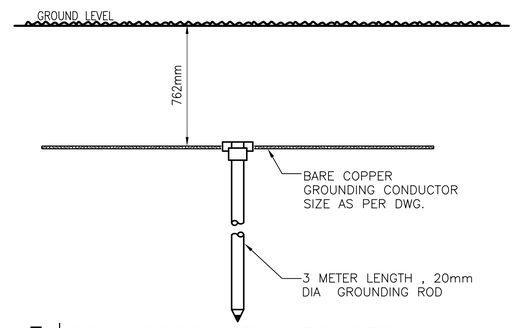

7 GROUND ROD INSTALLATION DETAIL

SCALE: N.T.S

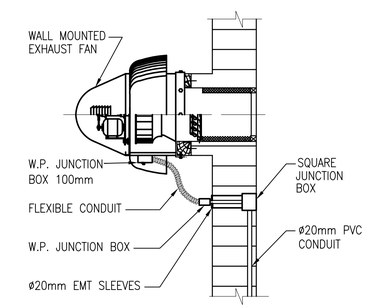

8 GENERAL INSTALLATION DETAIL FOR EXHAUST FAN (CONDUIT EMBEDDED)

SCALE: N.T.S

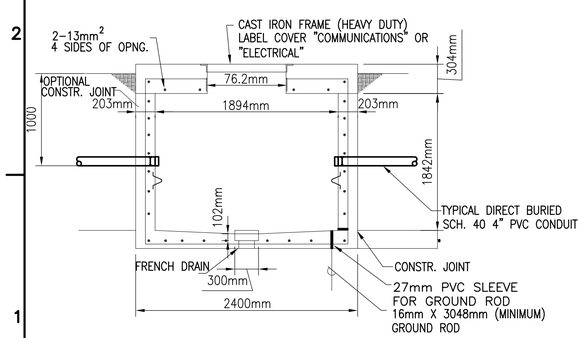

9 MANHOLE DETAIL (2400x2400mm)

SCALE: N.T.S.

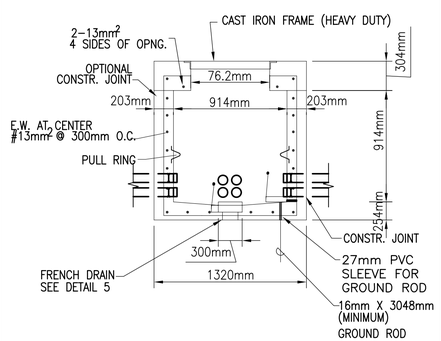

10 HAND HOLE DETAIL (1320x1320mm)

SCALE: N.T.S.

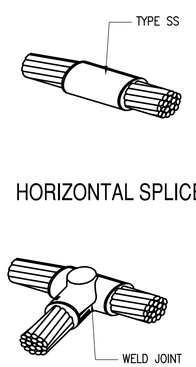

11 T-CONNECTION WELDING POINT

SCALE: N.T.S.

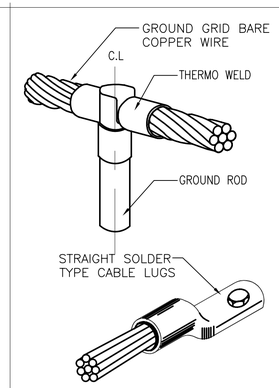

12 GROUNDING CABLE LUGS

SCALE: N.T.S.

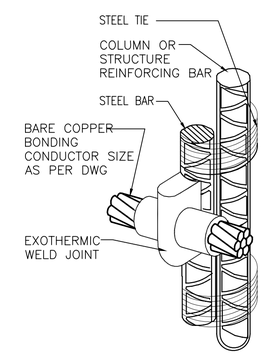

13 WELDING TO STEEL REINFORCING BAR

SCALE: N.T.S.

UNLESS OTHERWISE NOTED, LINEAR DIMENSIONS SHOWN ARE IN MILLIMETERS.

SYMBOL	DESCRIPTION	DATE	APP.

Designed By:
Drawn By:
Checked By:

Date: 10 MAY 2007
File No. AF0707
I.S.O. Sheet File Name: AF0707B-EL02D1.dwg
Solicitation Number: –

US Army Corps of Engineers Transatlantic Programs Center

ANA REGIONAL BRIGADE
PAKTIKA, AFGHANISTAN
DETENTION FACILITY

ELECTRICAL DETAILS

SHEET REFERENCE NUMBER:
B-DE-02

$DATE$
$FILE$

D SIZE BORDER
32 X 20.5

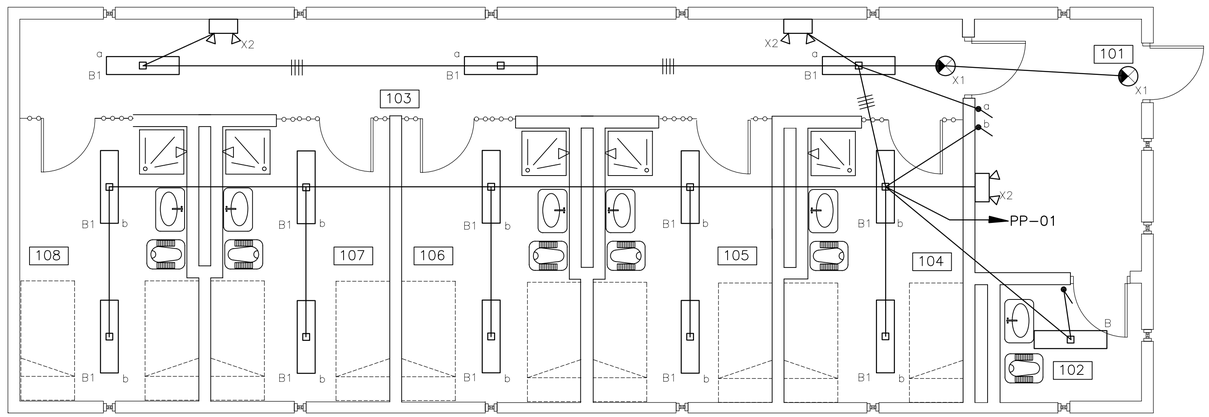

1 ELECTRICAL LIGHTING PLAN

B-E-01 SCALE: 1:50

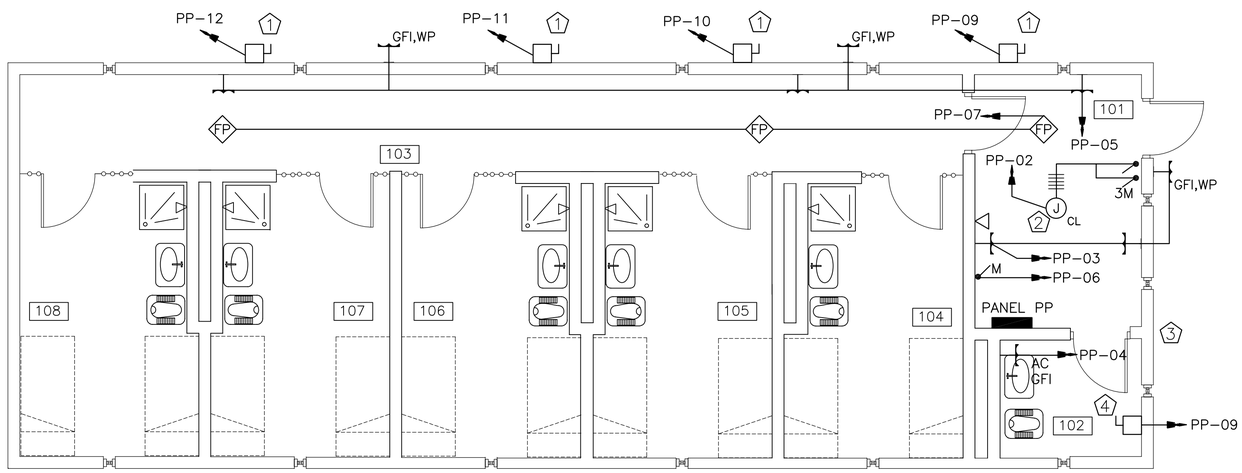

2 ELECTRICAL POWER PLAN

B-E-01 SCALE: 1:50

PANEL "PP" SCHEDULE									
100 AMPS MAIN CIRCUIT BREAKER 220 VOLTS 1 PHASE 3 WIRE 10,000 AIC									
MOUNTING: SURFACE									
NO	DESCRIPTION	BKR/P	VA A		VA B		BKR/P	DESCRIPTION	NO
1	LIGHTS - 101-108	20/1	1080	100			20/1	CEILING FAN/LIGHT - 101	2
3	RECEPS - 101, EXT ENTRANCE	20/1			990	330	20/1	RECEP - 102	4
5	RECEPS - 103, EXT WALL	20/1	1650	220			20/1	EF-DC-01 (EXHAUST FAN)	6
7	SMOKE DETECTORS - 101 & 103	20/1			330	6000	40/1	WATER HEATER - 102	8
9	SPLIT SYSTEM AC UNT - 101	20/1	2900	2900			20/1	SPLIT SYSTEM AC UNIT - 103	10
11	SPLIT SYSTEM AC UNIT - 103	20/1			2900	2900	20/1	SPLIT SYSTEM AC UNIT - 103	12
13	SPARE	20/1					20/1	SPARE	14
15	SPARE	20/1					20/1	SPARE	16
		TOTAL	8850		13450				
CONNECTED KVA:		22.3 KVA							
CONNECTED AMPS		58.68 AMPS							

NOTES:

SEE B-GE-02 FOR BRANCH CIRCUITS WIRING SCHEDULE WITH CONDUIT SIZES.

1. PROVIDE 1P, 20A, 220V NONFUSED DISCONNECT IN NEMA TYPE 4X ENCLOSURE.
2. J-BOX FOR CEILING FAN/LIGHT FIXTURE. SEE MECHANICAL SCHEDULES AND DETAILS.
3. PROVIDE EXTERIOR WALL MOUNTED TERMINATING BOX WITH NEMA 4X ENCLOSURE AND REQUIRED TERMINAL BLOCKS AND CABLES FOR BUILDING COMMUNICATIONS. ROUTE 1-4 PAIR CAT 5E FOR PHONE AND 1-4 PAIR CAT 5E FOR DATA TO DUPLEX OUTLETS. PROVIDE 16mm^2 BARE COPPER GROUND CONDUCTOR TO GROUND GRID/ROD.
4. PROVIDE 1P, 40A, 220V NONFUSED DISCONNECT IN NEMA TYPE 1 ENCLOSURE.

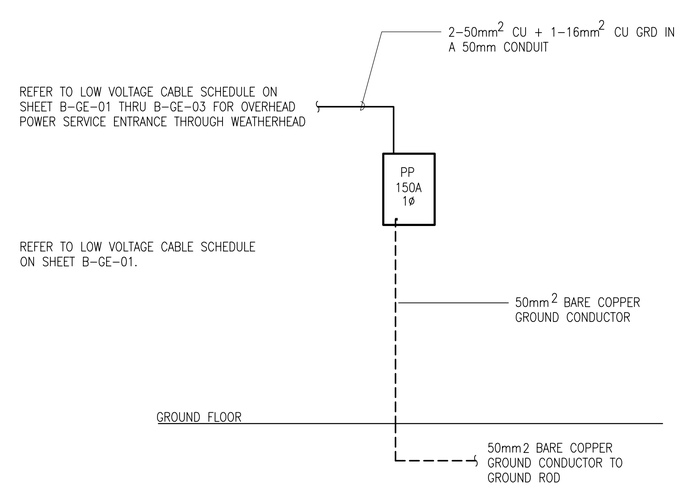

1 POWER RISER DIAGRAM

B-E-01 SCALE: N.T.S.

1000 0 1000mm
SCALE: 1 = 50

UNLESS OTHERWISE NOTED, LINEAR DIMENSIONS SHOWN ARE IN MILLIMETERS.

SYMBOL	DESCRIPTION	DATE	APP.

Date: 10 MAY 2007
File No. AF0707
I.S.O. Sheet File Name: AF0707B-EL01PN.dwg
Solicitation Number: –
Designed By:
Drawn By:
Checked By:

US Army Corps of Engineers Transatlantic Programs Center

ANA REGIONAL BRIGADE
PAKTIKA, AFGHANISTAN
DETENTION FACILITY

ELECTRICAL
LIGHTING & POWER PLAN
RISER & PANEL SCHEDULE

SHEET REFERENCE NUMBER:
B-E-01

$DATE$
$FILE$

D SIZE BORDER
32 X 20.5

LIGHTING LEGEND:

	ONE LAMP FLUORESCENT L.F.
	TWO LAMPS FLUORESCENT L.F.
	FOUR LAMPS FLUORESCENT L.F.
	FLOOD LIGHT, WALL MOUNTED
	6 METER, LIGHTING POLE WITH FLOOD LIGHT
	MIRROR WALL MOUNTED LIGHT FIXTURE
	WALL MOUNTED FIXTURE
	PENDANT MOUNTED INDUSTRIAL, LOW/HIGH BAY L.F.
X1	SURFACE (WALL/CELING)ONE FACE EXIT SIGN WITH BACK UP BATTERY.
X2	WALL MOUNTED EMERGENCY LIGHT WITH BACK UP BATTERY.
D	DIMMING SWITCH, 220V, 16AMP MOUNTED HEIGHT = 1300mm ABOVE FINISH FLOOR LEVEL FROM THE CENTER OF SWITCH
	ONE WAY SWITCH, 220V, 16AMP MOUNTED HEIGHT = 1300mm ABOVE FINISH FLOOR LEVEL FROM THE CENTER OF SWITCH
3	3 WAY SWITCH, 220V, 16AMP MOUNTED HEIGHT = 1300mm ABOVE FINISH FLOOR LEVEL FROM THE CENTER OF SWITCH
4	4 WAY SWITCH, 220V, 16AMP MOUNTED HEIGHT = 1300mm ABOVE FINISH FLOOR LEVEL FROM THE CENTER OF SWITCH

LOW CURRENT LEGEND:

TTC	TELEPHONE TERMINAL CABINET, SEE NOTE 3
	EQUIPMENT AS IDENTIFIED ON PLANS
	TELPHONE/DATA OUTLET DUPLEX, RJ-45, 4 PAIR CATEGORY 5E, SEE NOTE 2 & 5
FP	FIRE ALARM BOX FOR FUTURE INSTALLATION OF SELF SMOKE DETECTOR. LOCATE BOX A MIN. OF 1.0M FROM TIP OF FAN BLADE.
	TELEPHONE OUTLET ,RJ-45,4 PAIR CATEGORY 5E, SEE NOTE #2, 5

GROUNDING LEGEND:

	3 METER LENGTH, 0.02m DIAMETER , COPPER GROUNDING ROD
	UNDERGROUND BARE COPPER CONDUCTOR FOR CONNECTION BETWEEN GROUNDING RODS SIZE AS INDICATED ON THE PLAN
T	T-SPLICE EXOTHERMIC WELD
	AIR TERMINAL

POWER LEGEND:

	ELECTRICAL PANEL BOARD, SEE NOTE 4
MDP	MAIN DISTRIBUTION PANEL (MDP)
	NON FUSED DISCONNECT SWITCH ,220V ,50HZ ,20A (U.O.N)
	COMBINATION MOTOR STARTER SWITCH ,220V ,50HZ ,20A (U.O.N)
M	MANUAL MOTOR STARTER, WITH OVER LOAD PROTECTION RATING AS REQUIRED BY EXHAUST FAN MANUFACTURER MOUNTED HEIGHT = 1300mm ABOVE FINISH FLOOR LEVEL
3M	MOTOR RATED 3-SPEED SWITCH FOR CEILING FAN, 220V, 20AMP MOUNTED HEIGHT = 1300mm ABOVE FINISH FLOOR LEVEL
	RECESSED MOUNTED DUPLEX RECEPTACLES 1PH, 240V, 16A, 50HZ GROUNDING DIN TYPE. MOUNTING HEIGHT = 450mm ABOVE FINISH FLOOR LEVEL
GFI	RECESSED MOUNTED SINGLE RECEPTACLES 1PH, 240V, 16A, 50HZ GROUNDING DIN TYPE WITH GROUND FAULT INTERRUPTER AND SWITCH. MOUNTING HEIGHT =1300mm ABOVE FINISH FLOOR
CEE	RECESSED MOUNTED DUPLEX RECEPTACLES 3PH, 380V, 30A, 50HZ GROUNDING DIN TYPE MOUNTING HEIGHT =450mm ABOVE FINISH FLOOR
G	RECESSED MOUNTED DUPLEX RECEPTACLE LABEL INDICATE (HOSPITAL GRAD) 1PH, 240V, 16A, 50HZ GROUNDING DIN TYPE . MOUNTING HEIGHT =500mm ABOVE FINISH FLOOR INSULATED 4mm GROUNDING WIRE PER EACH RECEPTACLE
	SINGLE POWER SOCKET OUTLET, 220V, 50HZ, 20A MOUNTING HEIGHT = 450mm (U.O.N.)
PB	100mm x 100mm PULL BOX.
J	100mm x 100mm JUNCTION BOX
J CL	JUNCTION BOX FOR CEILING FAN WITH LIGHTS, SEE MECH STD. DETAILS
C.B	CIRCUIT BREAKER 30 AMP , 3 POLE , 380V , 50HZ
M	MOTORIZE DAMPER
REL	RELAY PANEL
M	MOTOR
H	HEATER
B XX-E-01	DETAIL DESIGNATION, TOP NUMBER INDICATE DETAIL NUMBER, BOTTOM LETTER INDICATES SHEET REF. NUMBER.

LIGHT FIXTURE NOTES:

1. ALL PENDANT MOUNTED FIXTURES ARE TO INCLUDE MANUFACTURERS "BALL-HANGER" TYPE CANOPY TO COMPENSATE FOR ROOF PITCH. FIELD CUT TO LENGTH.
2. ALL LIGHTING FIXTURES TO BE PROVIDED WITH "STANDARD" HIGH POWER FACTOR "ELECTRONIC" BALLASTS, UNLESS NOTED OTHERWISE.

LINE TYPE:

- - - - - - -	EXPOSED CONDUIT
————————	EMBEDDED OR CONCEALED CONDUIT
- - - -|- - - -	LIGHTNING PROTECTION CONDUCTOR

ABBREVIATIONS:

A	AMP
A.H.U.	AIR HANDLING UNIT
A/C	AIR CONDITIONING
A.C.U.	AIR CONDITION UNIT
A.F.F.	ABOVE FINNISH FLOOR LEVEL
C	CONDUIT
CB	CIRCUIT BREAKER
CHH	COMMUNICATION HANDHOLE
C.L.	CENTERLINE
C.O.E.	CORE OF ENGINEERS
CU	CONDENSING UNIT
ø, DIA	DIAMETER
EF	EXHAUST FAN
EHH	ELECTRICAL HANDHOLE
EMT	ELECTRIC METALLIC TUBING
EWH	ELECTRICAL WATER HEATER
FACP	FIRE ALARM CONTROL PANEL
GFI	GROUND FAULT INTERRUPTER
GRS	GALVANIZED RIGID STEEL
HZ	HERTZ
IR	IMPULSE RELAY
IL	INVERTED LEVEL
UTP	UNSHIELDED TWISTED PAIR
N.F.D.S	NON FUSED DISCONNECT SWITCH
L.C.	LIGHTING CONTACTOR
L.F.	LIGHT FIXTURE
LPI	LIGHTNING PROTECTION INSTITUTE
M	METER
MAX	MAXIMUM
MD	MOTORIZE DAMPER
MECH	MECHANICAL
MLO	MAIN LUGS ONLY
mm	MILLIMETER
P.A.C.U.	PACKAGE AIR CONDITION UNIT
PVC	POLYVINYL CHLORIDE
RM	ROOM
SF	SUPPLY FAN
S.U.	SPLIT UNIT
TRANS	TRANSFORMER
TTC	TELEPHONE TERMINAL CABINET
TYP	TYPICAL
TV	TELEVISION
U.O.N.	UNLESS OTHERWISE NOTED
V	VOLT
W	WATT
WP	WEATHER PROOF
WR	WELDING RECEPTACLE
RP	RECALCULATION PUMP

GENERAL NOTES:

1. MOUNTING HEIGHT OF SWITCHES 1.3M AFF UNLESS OTHERWISE NOTED.
2. MOUNT RECEPTACLES AND TELPHONE/DATA OUTLETS 450mm AFF UNLESS OTHERWISE NOTED. W=MOUNT 1.4M AFF.
3. MOUNT TELEPHONE TERMINAL CABINET (TTC) 1800mm FROM THE TOP OF CABINET TO FLOOR.
4. MOUNT ELECTRICAL PANELS 1800mm A.F.F. TO THE TOP OF THE PANEL.
5. TELEPHONE/DATA CABLE SHALL BE CAT 5E, 4 PAIRS
6. FOR EXACT LOCATION OF MECHANICAL EQUIPMENT REFER TO MECHANICAL DESIGN DRAWINGS.
7. EQUIPMENT SHALL BE RATED FOR 40 DEGREES C AND 2000 METERS (ABOVE SEA LEVEL) ELEVATION
8. THE GROUNDING RESISTANCE SHALL BE NO HIGHER THAN 25 OHMS , EXCEPT IN THE UPS AND EQUIPMENT ROOM SHALL BE 5 OHMS MEASURED MIN OF 48 HRS AFTER RAINFALL, ADDITIONAL RODS SHOULD BE USED TO ACHIEAVED THE REQUIRED RESISTANCE
9. ALL LIGHT FIXTURES SHALL BE SEISMICALLY BRACED.
10. ALL PANEL BOARD AIC RATINGS AS SHOWN ON SCHEDULES.
11. THE ELECTRICAL WIRING SHOWN ON PLAN DRAWINGS IS DIAGRAMMATIC AND INTENDED TO IDENTIFY THE CIRCUIT ARRANGEMENT FOR EACH AREA. THE CONDUIT CAN BE COMBINED FOR DIFFERENT CIRCUITS, PROVIDED THE INSTALLATION MEETS THE NEC, WITH NO MORE THAN 3 CONNECTIVE CIRCUITS IN ANY CONDUIT, SUCH AS 1, 3, 5 OR 2, 4, 6, ETC. THE 3 CIRCUITS CAN SHARE ONE NEUTRAL CONDUCTOR.

UNLESS OTHERWISE NOTED, LINEAR DIMENSIONS SHOWN ARE IN MILLIMETERS.

SYMBOL	DESCRIPTION	DATE	APP.

Designed By:
Date: 10 MAY 2007
Drawn By:
File No. AF0707
Checked By:
I.S.O. Sheet File Name: AF0707B-EL01GN.dwg
Solicitation Number: –

US Army Corps of Engineers Transatlantic Programs Center

ANA REGIONAL BRIGADE
PAKTIKA, AFGHANISTAN
DETENTION FACILITY

ELECTRICAL
LEGEND AND NOTES

SHEET REFERENCE NUMBER:
B-GE-01

$DATE$
$FILE$

D SIZE BORDER
32 X 20.5

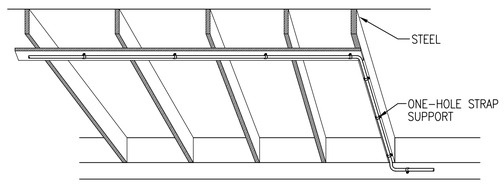

1 SURFACE MOUNTED CONDUIT SUPPORT

SCALE: N.T.S

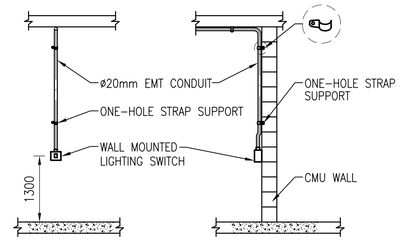

NOTE:-
WALL MOUNTED LIGHTING OUTLETS SHOULD BE CENTRAL ON A BLOCK, NOT BETWEEN TWO BLOCKS.

2 GENERAL INSTALLATION DETAIL FOR LIGHTING SWITCH (CONDUIT EXPOSED)

SCALE: N.T.S

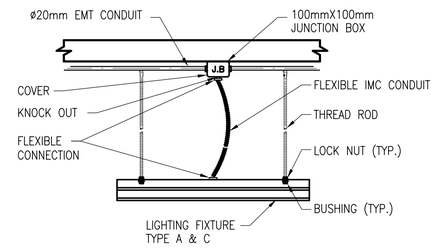

3 PENDANT LIGHT FIXTURE DETAIL (NOT USED)

SCALE: N.T.S

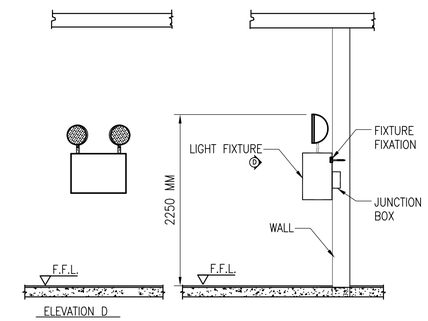

4 SURFACE EMERGENCY LIGHT FIXTURE DETAIL

SCALE: N.T.S

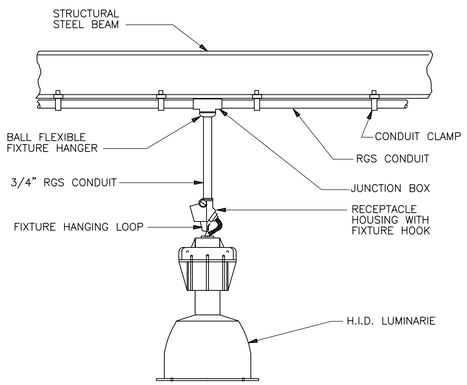

5 H.I.D. LUMINARIE PENDANT MOUNTED

SCALE: N.T.S

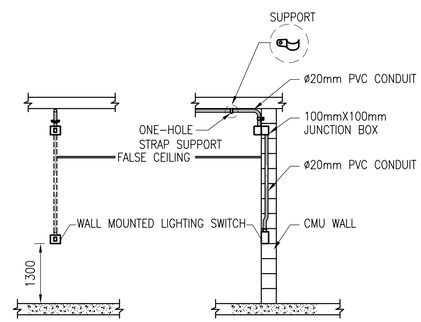

6 GENERAL INSTALLATION DETAIL FOR LIGHT SWITCH (CONDUIT CONCEALED)

SCALE: N.T.S

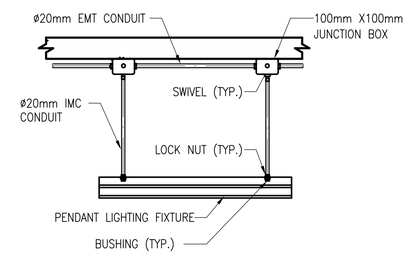

7 INSTALLATION OF LIGHTING FIXTURE IN SEISMIC BUILDING

SCALE: N.T.S

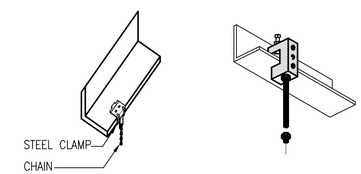

THE CHAIN FIXATION

THREADED ROD FIXATION

8 GENERAL SUPPORT DETAIL

SCALE: N.T.S

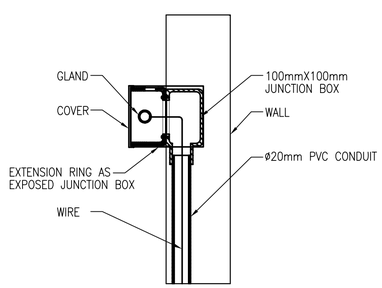

9 CONVERTING FROM EXPOSED TO EMBEDDED ROUTING IN WALL

SCALE: N.T.S

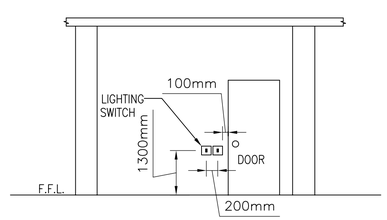

NOTE:-
THE LOCATION OF THE CONDUIT FEEDING THE FIRST SWITCH TO BE 100mm FROM THE DOOR OPENING

10 LIGHT SWITCH MOUNTING

SCALE: N.T.S

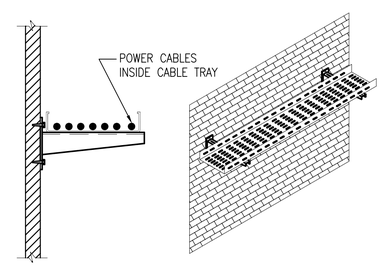

11 GENERAL INSTALLATION DETAIL FOR WALL MOUNTED CABLE TRAY

SCALE: N.T.S

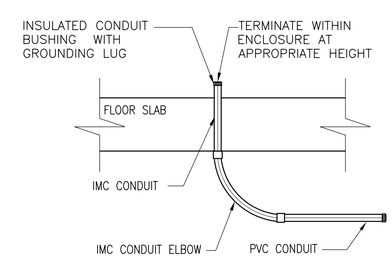

12 TYPICAL CONDUIT STUB-UP THROUGH FLOOR SLAB FOR FEEDING EQUIPMENT

SCALE: N.T.S

UNLESS OTHERWISE NOTED, LINEAR DIMENSIONS SHOWN ARE IN MILLIMETERS.

SYMBOL	DESCRIPTION	DATE	APP.

Designed By:
Date: 10 MAY 2007
Drawn By:
File No. AF0707
Checked By:
I.S.O. Sheet File Name: AF0707B-EL01D1.dwg
Solicitation Number: –

US Army Corps of Engineers Transatlantic Programs Center

ANA REGIONAL BRIGADE
PAKTIKA, AFGHANISTAN
DETENTION FACILITY

ELECTRICAL DETAILS

SHEET REFERENCE NUMBER:
B–DE–01

$DATE$
$FILE$

D SIZE BORDER
32 X 20.5

FINISH SCHEDULE

ROOM NO.	ROOM NAME	FLOOR	CEILING	INTERIOR WALLS				REMARKS
				NORTH	EAST	SOUTH	WEST	
100	CORRIDOR	F1	C1	W1	W1		W1	
101	OFFICE	F2	C1	W1	W1		W1	
102	TOILET	F2	C1	W1	W1	W2	W1	
103	CELL # 5	F1	C1	W1	W1	W2	W1	
104	CELL # 4	F1	C1	W1	W1	W2	W1	
105	CELL # 3	F1	C1	W1	W1	W2	W1	
106	CELL # 2	F1	C1	W1	W1	W2	W1	
107	CELL # 1	F1	C1	W1	W1	W2	W1	

FINISHING SCHEDULE LEGEND

FLOOR

F1	SEALED CONCRETE
F2	300MMX300MM TERRAZZO TILE

WALL

W1	WHITE PAINTED PLASTER
W2	150MMX150MM GLAZED CERAMIC TILES FULL HEIGHT OF WALLS

CEILING

C1	GYPSUM BOARD – PAINTED
C2	MOISTURE RESISTANT GYPSUM BOARD – PAINTED
C3	EXPOSED STRUCTURE (CONCRETE)

WALL SYMBOLS:

CMU WALL

NOTES:

1– ALL WALLS ARE 200MM THK. CMU UNLESS NOTED OTHERWISE.

2– ALL WALLS TERMINATE AT CEILING UNLESS NOTED OTHERWISE. REF. STRUCT. DRWGS.

3– ALL DOOR JAMBS ARE 200MM UNLESS OTHERWISE NOTED.

4– ALL DIMENSIONS ARE TO FACE OF CMU UNLESS NOTED OTHERWISE.

5– ALL VERTICAL DIMENSIONS & LEVELS ARE FROM GROUND FLOOR FINISHED SLAB. THIS ELEVATION IS +0000.

6– SEE DRAWING AR11DT & AR12DT FOR STANDARD DETAILS.

7– NOT USED.

8– ALL HVAC OPENINGS DIMENSION SHALL BE VERIFIED WITH APPROVED SUBMITTALS.

10– TOTAL AREA OF BUILDING IS 131 SM.

11 -- ALL FINISH CEILING HEIGHTS ARE TO UNDERSIDE OF STRUCTURE.

12 -- CERAMIC TILE SHALL BE LOCATED ON ALL SHOWER ENCLOSURES AND ALL WET WALLS ONLY (FULL HEIGHT OF WALLS).

200 0 200mm
SCALE: 1 = 10

UNLESS OTHERWISE NOTED, LINEAR DIMENSIONS SHOWN ARE IN MILLIMETERS.

SYMBOL	DESCRIPTION	DATE	APP.

Designed By: R. E. BROWN
Date: 10 MAY 2007
Drawn By: R. E. BROWN
File No. AF0707
Checked By: B.R. THOMAS
I.S.O. Sheet File Name: NAF0707B-AR05SC.dwg
Solicitation Number: –

US Army Corps of Engineers Transatlantic Programs Center

ANA REGIONAL BRIGADE
PAKTIKA, AFGHANISTAN
DETENTION FACILITY
SCHEDULES

SHEET REFERENCE NUMBER:
A–05SC

$DATE$
$FILE$

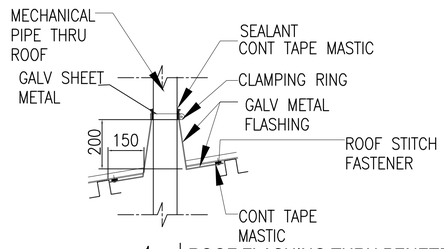

1 ROOF FLASHING THRU PENETRATION

SCALE: NTS

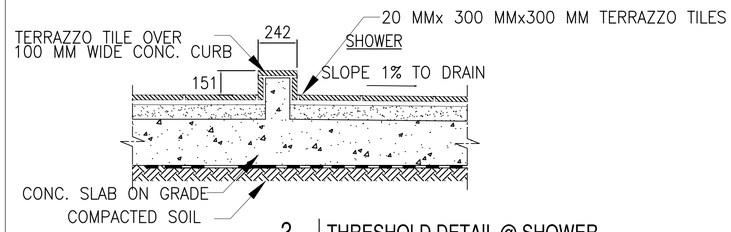

2 THRESHOLD DETAIL @ SHOWER

SCALE: NTS

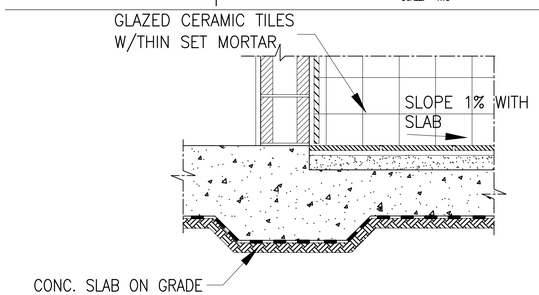

3 TERRAZZO TILE DETAIL

SCALE: NTS

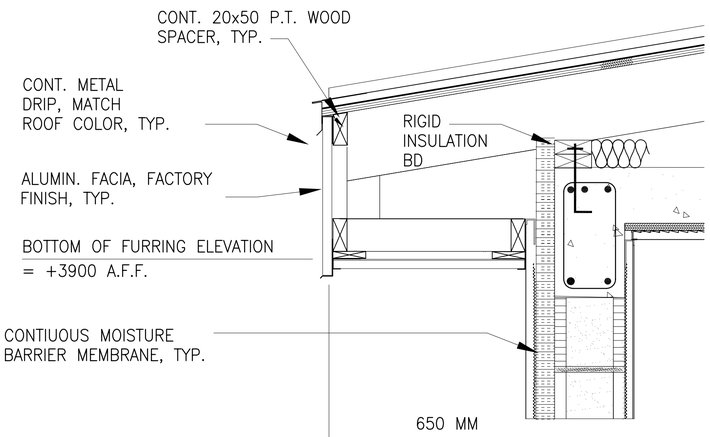

4 ROOF EAVE DETAIL

SCALE: NTS

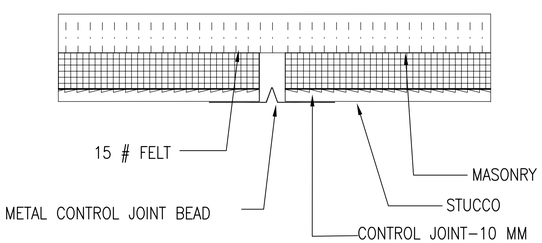

5 STUCCO CONTROL JOINT

SCALE: N.T.S.

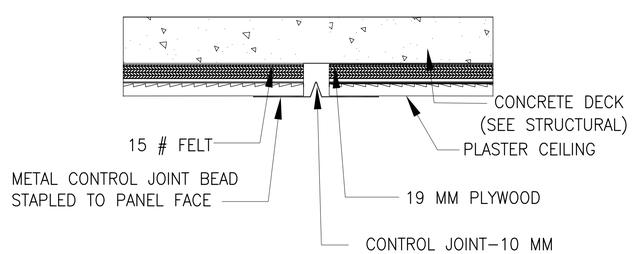

6 PLASTER CEILING CONTROL JOINT

SCALE: N.T.S.

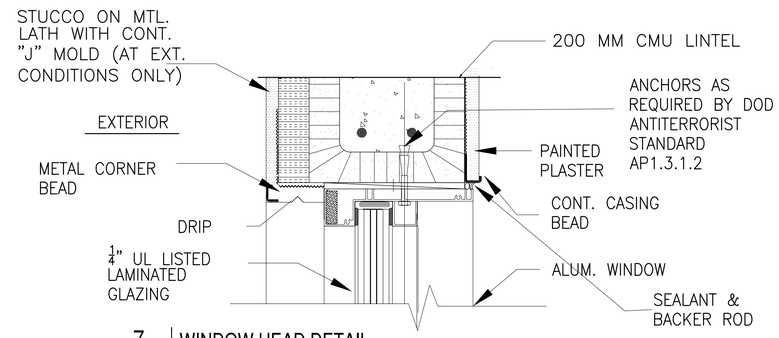

7 WINDOW HEAD DETAIL

SCALE: NTS

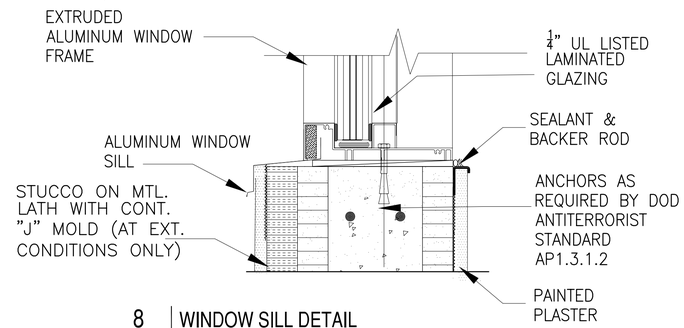

8 WINDOW SILL DETAIL

SCALE: NTS

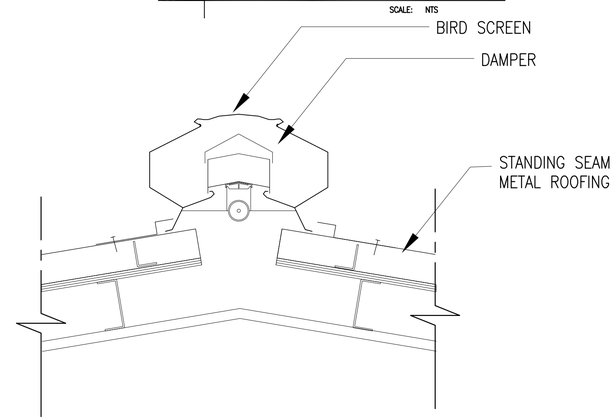

9 GRAVITY RIDGE VENTILATOR DETAIL

A–030T

SCALE: 1:10

SYMBOL	DESCRIPTION	DATE	APR

Designed By: R. E. BROWN
Drawn By: R. E. BROWN
Checked By: B.R. THOMAS
Date: 10 MAY 2007
File No. AE0707
I.S.O. Sheet File Name: AE0707B-AR12D1.DWG
Solicitation Number: _

US Army Corps of Engineers Transatlantic Programs Center

ANA REGIONAL BRIGADE
PAKTIKA, AFGHANISTAN
DETENTION FACILITY

MISCELLANEOUS DETAILS

SHEET REFERENCE NUMBER:
A–12DT

GRAPHIC SCALE:

200 0 200mm

SCALE: 1 = 10

UNLESS OTHERWISE NOTED, LINEAR DIMENSIONS SHOWN ARE IN MILLIMETERS.

$DATE$
$FILE$

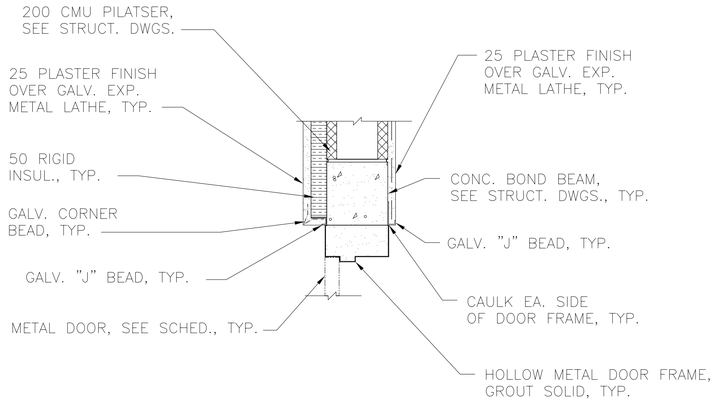

1 DETAIL - EXTERIOR DOOR HEAD
DB-A-01 SCALE: 1:10

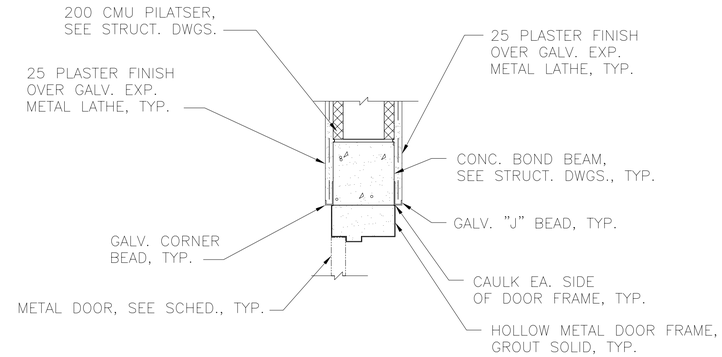

4 DETAIL - INTERIOR DOOR HEAD
DB-A-01 SCALE: 1:10

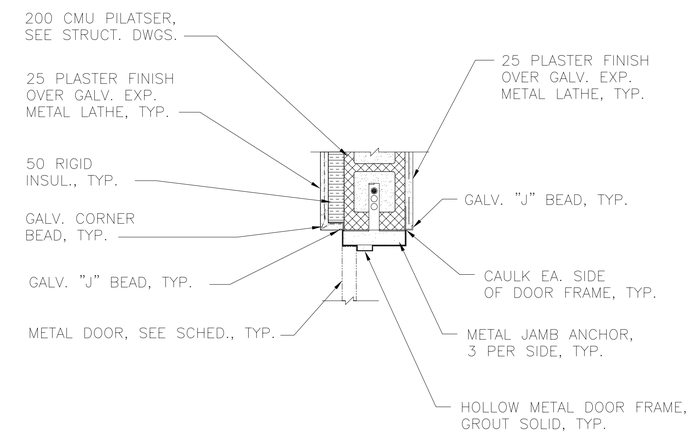

2 DETAIL - EXTERIOR DOOR JAMB
DB-A-01 SCALE: 1:10

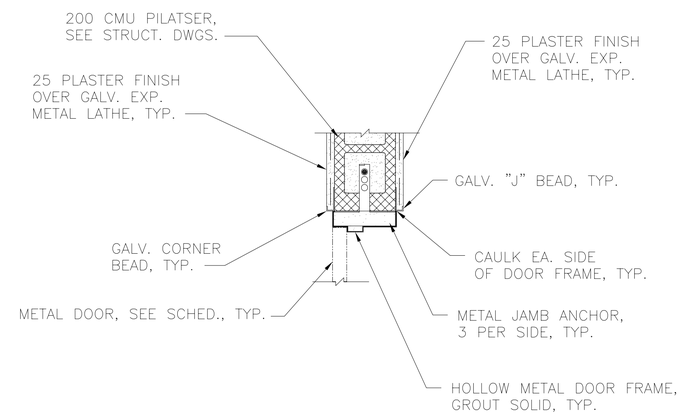

5 DETAIL - INTERIOR DOOR JAMB
DB-A-01 SCALE: 1:10

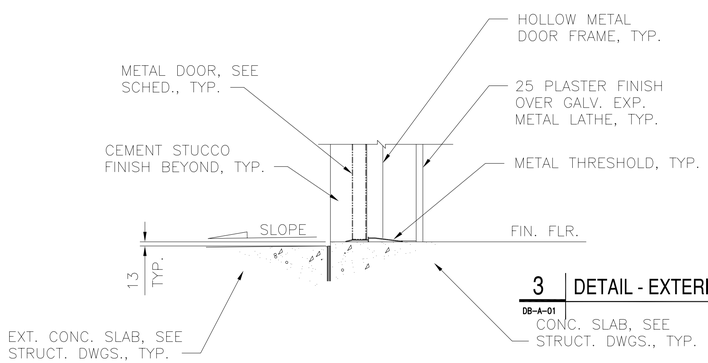

3 DETAIL - EXTERIOR DOOR SILL
DB-A-01 SCALE: 1:10

UNLESS OTHERWISE NOTED, LINEAR DIMENSIONS SHOWN ARE IN MILLIMETERS.

SYMBOL	DESCRIPTION	DATE	APR

Designed By: R. E. BROWN
Date: 10 MAY 2007
Drawn By: R. E. BROWN
File No. AE0707
Checked By: B.R. THOMAS
I.S.O. Sheet File Name: RT-AF0707B-AR11DRDT.dwg
Solicitation Number: _

US Army Corps of Engineers Transatlantic Programs Center

ANA REGIONAL BRIGADE
PAKTIKA, AFGHANISTAN
INTERPRETER FACILITIES
DOOR DETAILS

SHEET REFERENCE NUMBER:
A-11DT

$DATE$
$FILE$

D SIZE BORDER
32 X 20.5

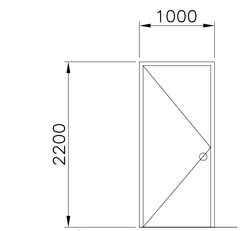

1	DOOR(D1)	
1A	DOOR(D1A)	20-MIN FIRE RATED
1B	DOOR (D1B)	45-MIN. FIRE RATED

SCALE: 1:40

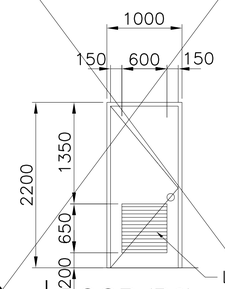

2	DOOR (D2)	
2A	DOOR (D2A)	20-MIN FIRE RATED

SCALE: 1:40

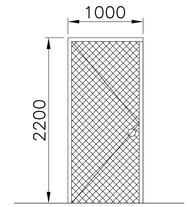

3	DOOR (D3)

SCALE: 1:40

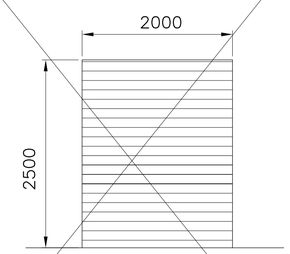

4	DOOR(D4)
4A	DOOR (D4A)

SCALE: 1:40

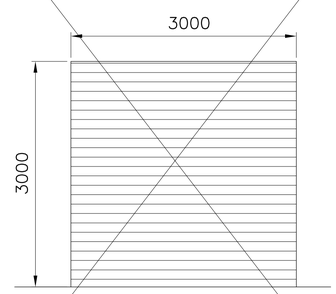

5	DOOR(D5)
5A	DOOR (D5A)

SCALE: 1:40

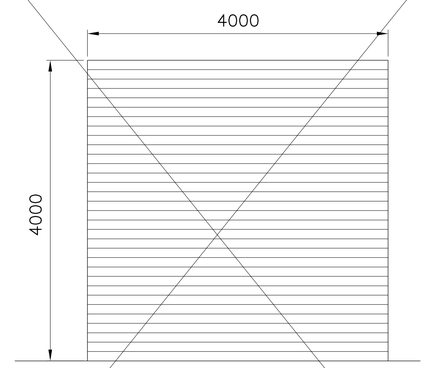

6	DOOR(D6)
6A	DOOR (D6A)

SCALE: 1:40

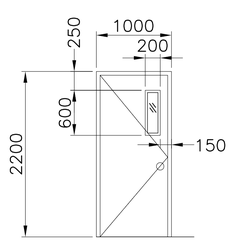

7	DOOR (D7)

SCALE: 1:40

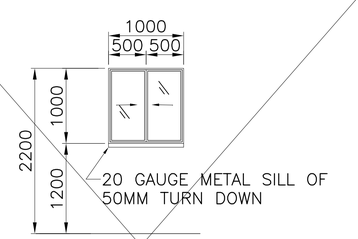

WA	WINDOW (W1)

SCALE: 1:40

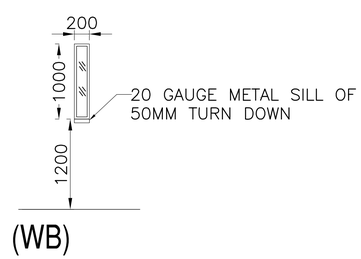

(WB)

WB	WINDOW (W2)

SCALE: 1:40

DOOR SCHEDULE

DOOR NO.	DIMENSION WIDTH	DIMENSION HEIGHT	PANEL NUMBER	OPENING SYSTEM	HDWR. NO.	MATERIAL
D1	1000	2200	1	HINGED	DH-3A	HM DOOR IN HM FRAME
D1A	1000	2200	1	HINGED	DH-3	HM DOOR IN HM FRAME; 20 MIN FIRE RATED
D1B	1000	2200	1	HINGED	DH-6	HM DOOR IN HM FRAME; 45 MIN FIRE RATED
D2	3000	3000	1	HINGED	DH-9	HM DOOR IN HM FRAME W/ FIRE DAMPER FUSIBLE LINK LOUVER
D2A	3000	4000	1	HINGED	DH-9	HM DOOR IN HM FRAME W/ FIRE DAMPER FUSIBLE LINK LOUVER 20 MIN FIRE RATED
D3	1000	2200	1	HINGED	–	WELDED WIRE MESH IN STEEL FRAME
D4	2000	2500	1	ROLL-UP	–	STEEL DOOR & FRAM, MANUALLY OPERATED, INSULATED
D4A	2000	2500	1	ROLL-UP	–	STEEL DOOR & FRAM, MANUALLY OPERATED, INSULATED
D5	3000	3000	1	ROLL-UP	–	STEEL DOOR & FRAM, MANUALLY OPERATED, INSULATED
D5A	3000	3000	1	ROLL-UP	–	STEEL DOOR & FRAM, MANUALLY OPERATED, INSULATED
D6	4000	4000	1	ROLL-UP	–	STEEL DOOR & FRAM, MANUALLY OPERATED, INSULATED
D6A	4000	4000	1	ROLL-UP	–	STEEL DOOR & FRAM, MANUALLY OPERATED, INSULATED
D7	1000	2200	1	HINGED	DH-3	HM DOOR IN HM FRAME W/ LAMINATED GLAZING

WINDOW SCHEDULE

WINDOW NUMBER	DIMENSION WIDTH	DIMENSION HEIGHT	DIMENSION SILL HEIGHT	PANEL NUMBER	OPENING SYSTEM	DESCRIPTION
WA	1000	1000	1700	2	HINGED	ALUM. PANELS W/TRANSPARENT 5MM GLASS METAL SILL AND FIXED INSECT METAL SCREEN
WB	200	1800	400	1	FIXED	ALUM. PANELS W/5MM WIRE GLASS

NOTES:
1. FOR HARDWARE SET DESCRIPTION SEE SPECIFICATIONS SECTION 08710 PARAGRAPH 3.5.
2. FOR DOOR DETAILS SEE 1 & 2/CO-A-04.
3. FOR WINDOW DETAILS SEE 5 & 6/CO-A-04.
4. INTERIOR WINDOWS SHALL NOT BE PROVIDED W/INSECT SCREEN.

UNLESS OTHERWISE NOTED, LINEAR DIMENSIONS SHOWN ARE IN MILLIMETERS.

SYMBOL	DESCRIPTION	DATE	APR

Designed By: R. E. BROWN
Drawn By: R. E. BROWN
Checked By: B.R. THOMAS
Date: 10 MAY 2007
File No. AF0707
I.S.O. Sheet File Name: AF0707B-AR10SC.dwg
Solicitation Number: –

US Army Corps of Engineers Transatlantic Programs Center

ANA REGIONAL BRIGADE
PAKTIKA, AFGHANISTAN
DETENTION FACILITY

DOOR AND WINDOW SCHEDULE

SHEET REFERENCE NUMBER:
A-10SC

$DATE$
$FILE$

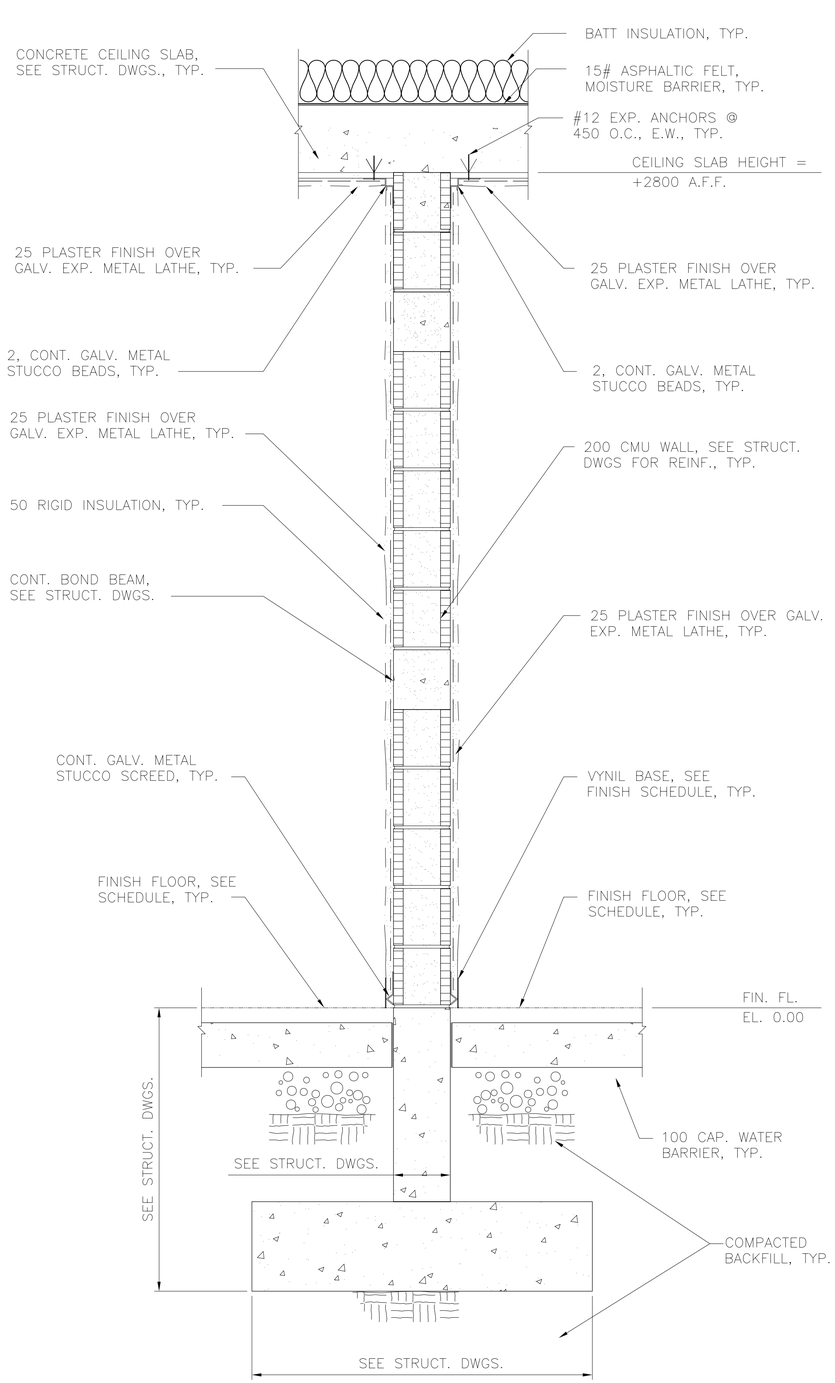

A SECTION

CB-A-01 | REF. | SCALE: 1:10

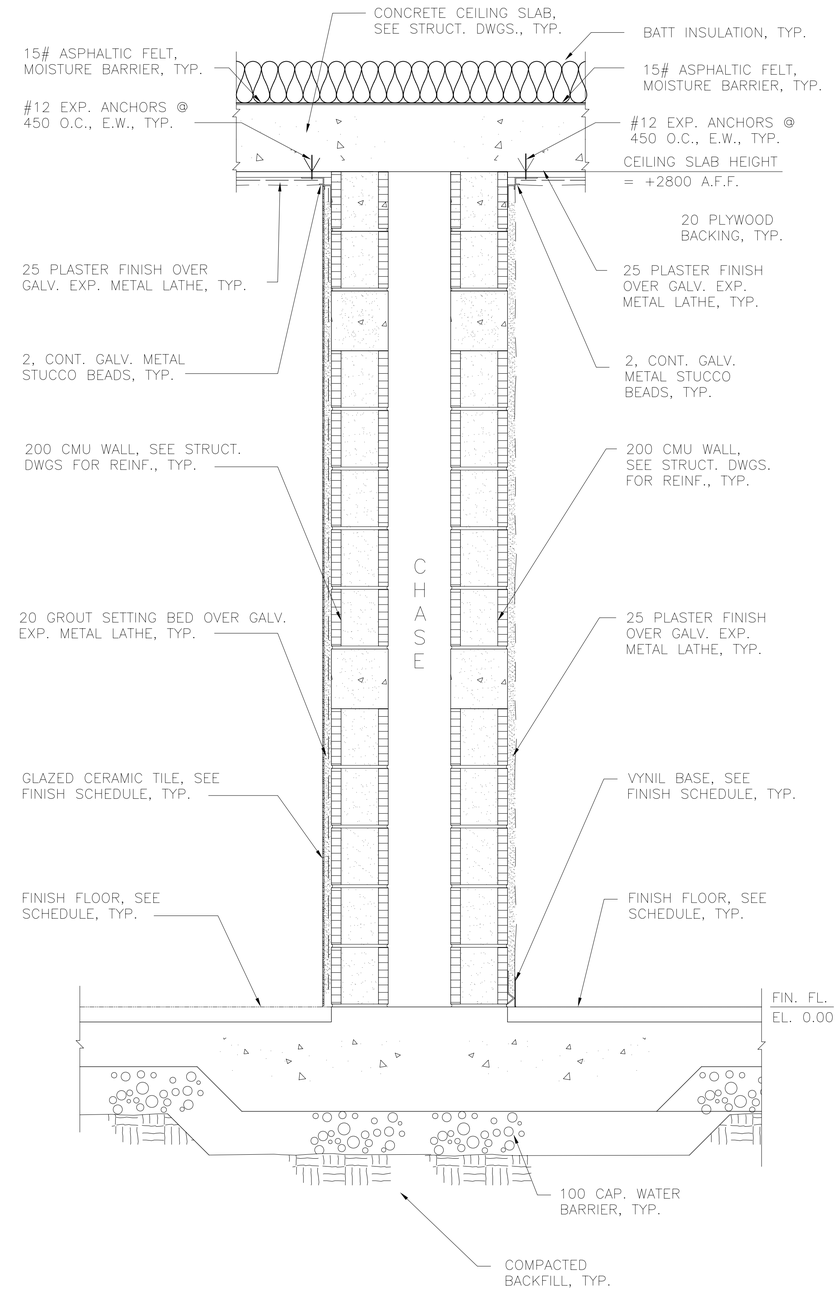

NOTE:
FOR WALL LOCATIONS SEE PLAN.

B SECTION

CB-A-01 | REF. | SCALE: 1:10

GRAPHIC SCALE:

200 0 200mm
SCALE: 1 = 10

UNLESS OTHERWISE NOTED, LINEAR DIMENSIONS SHOWN ARE IN MILLIMETERS.

SYMBOL	DESCRIPTION	DATE	APP.

Designed By: R. F. BROWN
Drawn By: R. F. BROWN
Checked By: B.R. THOMAS
Date: 10 MAY 2007
File No. AF0707
I.S.O. Sheet File Name: AF0707B-AR09SE.dwg
Solicitation Number: –

US Army Corps of Engineers Transatlantic Programs Center

ANA REGIONAL BRIGADE
PAKTIKA, AFGHANISTAN
DETENTION FACILITY

INTERIOR WALL SECTIONS

SHEET REFERENCE NUMBER:
A-09SE

$DATE$
$FILE$

$DATE$
$FILE$

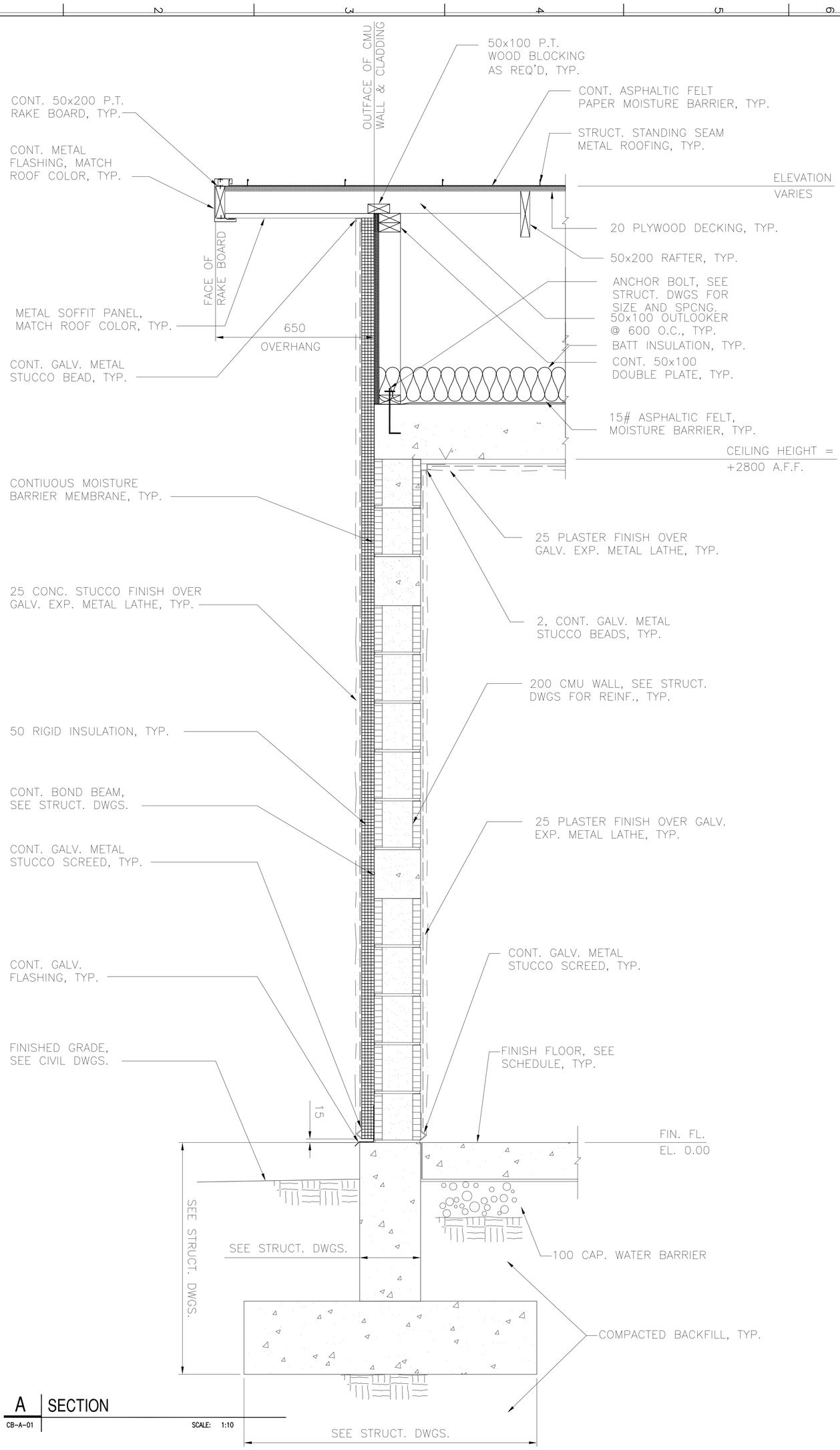

A SECTION
CB-A-01 SCALE: 1:10

UNLESS OTHERWISE NOTED, LINEAR DIMENSIONS SHOWN ARE IN MILLIMETERS.

GRAPHIC SCALE: 200 0 200mm SCALE: 1 = 10

SHEET REFERENCE NUMBER: A-08SE

ANA REGIONAL BRIGADE
PAKTIKA, AFGHANISTAN
DETENTION FACILITY
WALL SECTION

US Army Corps of Engineers
Transatlantic Programs Center

Designed By: R. E. BROWN	Date: 10 MAY 2007
Drawn By: R. E. BROWN	File No. AF0707
Checked By: B.R.THOMAS	C.O. Sheet File Name: AF0707B-AR08SE.dwg
	Solicitation Number: –

SYMBOL	DESCRIPTION	DATE	APR

A
BA01 BA06

SECTION
SCALE = 1:10

GRAPHIC SCALE:
200 0 200mm
SCALE: 1 = 10

UNLESS OTHERWISE NOTED, LINEAR DIMENSIONS SHOWN ARE IN MILLIMETERS.

SYMBOL	DESCRIPTION	DATE	APR

Designed By: R. BROWN
Drawn By: R. E. BROWN
Checked By: R. BROWN
B. THOMAS

Date: 10 MAY 2007
File No. AF0707
I.S.O. Sheet File Name: AF0707B-AR07SE.dwg
Solicitation Number: –

US Army Corps of Engineers
Transatlantic Programs Center

ANA REGIONAL BRIGADE
PAKTIKA, AFGHANISTAN
DETENTION FACILITY

WALL SECTION

SHEET REFERENCE NUMBER:
B–A–07

$DATE$
$FILE$

D SIZE BORDER
32 X 20.5

ARCHITECTURAL ABBREVIATIONS

A	
ABOVE FINISH FLOOR	AFF
ACCESS PANEL	AP
ACOUSTIC	ACOUS (ACST)
ACTIVE LEAF	A/L
AGGREGATE	AGG
AIR CONDITIONING	A/C
ALUMINUM	ALUM (AL)
ANCHOR BOLT	AB
AND	&
ANGLE	∠ (ANG)
ARCHITECTURAL	ARCH
AREA INLET	AI.
ASPHALT	ASPH
AT	@
AUTOMATIC	AUTO
B	
BACK OF WALL	BOW
BATTEN INSULATION	BATT INSUL
BEAM	BM
BEARING	BRG
BITUMINOUS	BIT (BITUM)
BLOCK	BLK
BLOCKING	BLKG
BOARD	BD
BOTTOM	BOT (BOTT)
BRACING	BRCG
BRACKET	BRKT
BUILDING	BLDG
C	
CABINET	CAB
CAST IRON	CI
CATCH BASIN	CB
CEILING	CLG
CEMENT	CEM
CENTER	CTR
CENTER LINE	℄ OR CL
CENTER TO CENTER	CC
CERAMIC TILE	CT
CIRCULAR	CIR
CLEANOUT	CO
CLEAR	CLR
CLOSET	CLO
COLUMN	COL
CONCRETE	CONC
CONCRETE MASONRY UNITS	CMU
CONNECTION	CONN
CONSTRUCTION	CONSTR
CONSTRUCTION JOINT	CONSTR JT
CONTINUOUS	CONT.
CONTROL JOINT	CJ
CORNER	COR
CORRIDOR	CORR
COUNTER	CNTR
COUNTER SUNK	CSK
D	
DAMPPROOFING	DP
DETAIL	DET (DETL)
DIAGONAL	DIAG
DIAMETER	DIA
DIMENSION	DIM
DISPENSER	DISP
DOOR	DR
DOUBLE	DBL
DOWN	DN
DRAWER	DWR
DRAWING	DWG
DRINKING FOUNTAIN	DF
E	
EACH	EA
ELECTRICAL OR ELECTRIC	ELEC
ELEVATION	EL.
EMERGENCY	EMERG
ENCLOSURE	ENCL
ENTRANCE	ENTR
EQUIPMENT	EQUIP (EQPT)
EQUAL	EQ
EXHAUST	EXH
EXISTING	EXIST.
EXPANSION	EXPN
EXPANSION JOINT	EJ (EXP JT)
EXTERIOR	EXT
F	
FACE OF CONCRETE	FOC
FACE OF FINISH	FOF
FACE OF MASONRY	FOM
FACE OF WALL	FOW
FINISH	FIN.
FIRE HYDRANT	FH
FIXTURE	FIX
FLASHING	FLASH
FLOOR	FLR OR FL
FLOOR DRAIN	FD
FLOORING	FLG
FOOTING	FTG
FOUNDATION	FDN
FRAME	FR
FINISH FLOOR LINE	FFL
FIRE EXTINGUISHER	FE
G	
GAGE OR GAUGE	GA
GALVANIZED	GALV
GALVANIZED IRON	GI
GAS	G
GRID LINE	GL
GLAZED WALL TILE	GWT
GRADE	GR
GROUND	GND
GROUND CLEANOUT	GCO
GYPSUM	GYP
GYPSUM WALLBOARD	GYP BD (GWB)
H	
HANDRAIL	HDR
HARDBOARD	HBD
HARDWARE	HDW (HW)
HEAD	HD
HEATER	HTR
HEIGHT	HT (HGT)
HIGH POINT	H.PT.
HOLLOW METAL	HM
HORIZONTAL	HORIZ
HOSE BIBB	HB
I	
INSIDE DIAMETER	I.D.
INSULATION	INSUL.
INTERIOR	INT (INTR)
J	
JANITOR	JAN
JOINT	JT
JOIST	JST
K	
KEY LOCK	KL
KICK PLATE	KP
L	
LABORATORY	LAB
LAMINATE	LAM
LAVATORY	LAV
LIGHT	LT
LIGHTING	LTG
LOW POINT	LP
LUMBER	LBR
LOUVER	LVR
M	
MACHINE	MACH
MAINTENANCE	MAINT
MASONRY OPENING	MO
MASONRY UNIT	MU
MASTIC	MSTC
MATERIAL	MATL
MAXIMUM	MAX
MECHANICAL	MECH
METAL	MET
METAL BUILDING MANUFACTURER	MBM
MINIMUM	MIN
MIRROR	MIR
MISCELLANEOUS	MISC
MONOLITHIC	MONO
N	
NORTH	N
NOT IN CONTRACT	NIC
NUMBER	NO. (#)
NOT TO SCALE	NTS
O	
OFFICE	OFF.
ON CENTER	OC
OPENING	OPNG
OPPOSITE	OPP
OUTSIDE DIAMETER	O.D.
P	
PANEL	PNL
PAPER TOWEL DISPENSER	PTD
PAPER TOWEL DISPENSER & RECEPTACLE	PTD/R
PAPER TOWEL RECEPTACLE	PTR
PARTITION	PRTN
PLASTER	PLAST
PLATE	PL OR P
PLUMBING	PLBG
PLYWOOD	PLY WD
PRECAST	PRCST
Q	
QUARRY TILE	Q.T.
QUARTERS	QTRS
R	
RADIUS	RAD
RECEPTACLE	RECP
REFERENCE	REF
REFRIGERATOR	REFR
REINFORCEMENT	REINF
REQUIRED	REQD
REVISIONS	REV
RISER	R
ROOFING	RFG
ROOM	RM
ROUGH	RGH
S	
SANITARY NAPKIN DISPENSER	SND
SANITARY NAPKIN RECEPTACLE	SNR
SCHEDULE	SCH
SEAT COVER DISPENSER	SCD
SERVICE SINK	SSK
SHEATHING	SHTHG
SHEET	SHT.
SHEET METAL	SHT. MET.
SHOWER	SHR
SIMILAR	SIM
SOAP DISPENSER	SD
SOLID CORE	SC
SOUTH	S
SPEAKER	SPKR
SPECIFICATION	SPEC
SPLASH BLOCK	SB
SQUARE	SQ OR □
STANDARD	STD
STEEL	STL
STORAGE	STOR
STRUCTURAL	STRL
SUSPENDED	SUSP
SYMMETRICAL	SYM
T	
TELEPHONE	TEL
TEMPERATURE	TEMP
TEMPERED GLASS	T
TERRAZZO	TER
THICK	THK
TOILET PAPER DISPENSER	TPD
TOP OF CONCRETE	TOC
TOP OF CURB	TC
TOP OF PAVEMENT	TP
TOP OF STEEL	TOS
TOP OF WALL	TW
TOPOGRAPHY	TOPO
TYPICAL	TYP
U	
UNLESS OTHERWISE NOTED	UON
URINAL	UR
V	
VENTILATOR	VENT
VENT THRU ROOF	VTR
VERTICAL	VERT
VESTIBULE	VEST
W	
WATER CLOSET	WC
WEIGHT	WT
WELDED WIRE FABRIC	WWF
WINDOW	WW
WITH	W/
WITHOUT	W/O
WOOD	WD

SYMBOLS

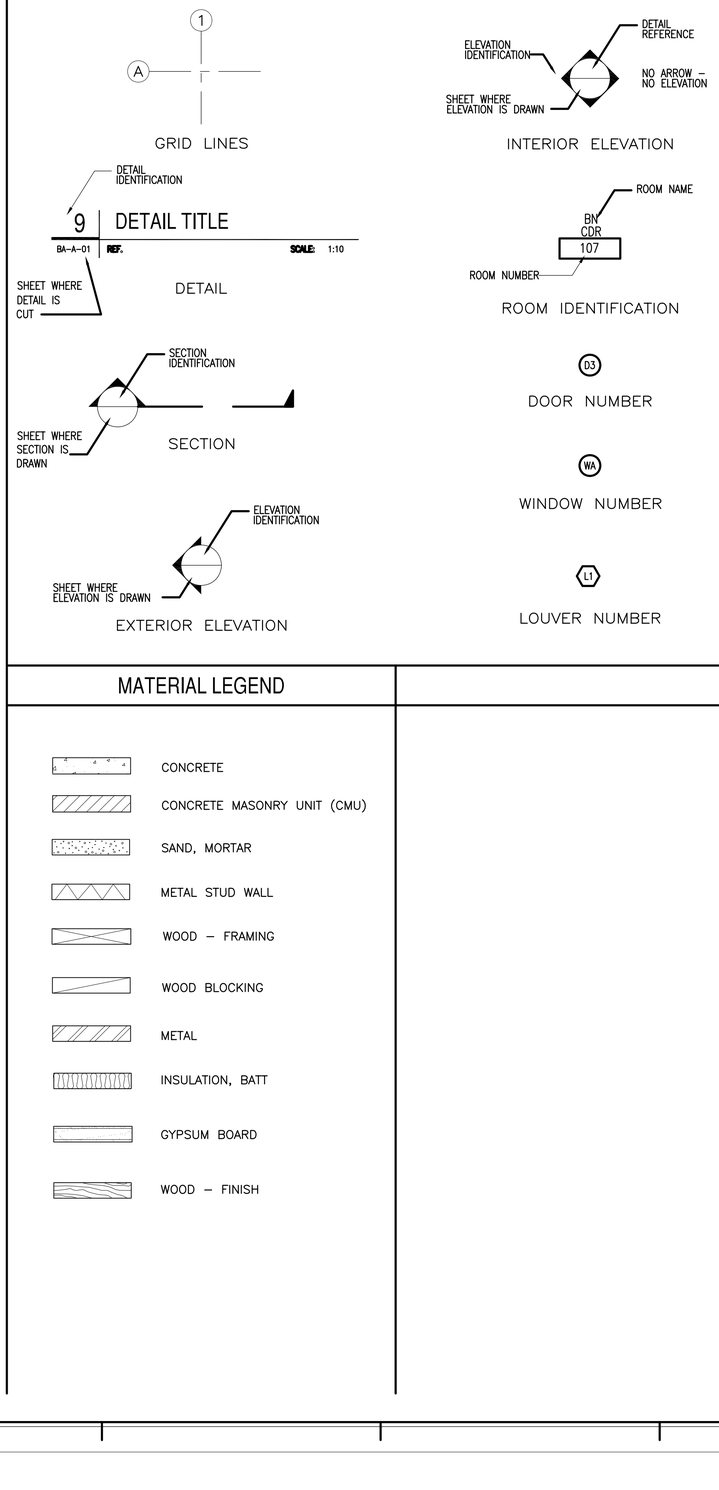

MATERIAL LEGEND

GENERAL NOTES:

UNLESS OTHERWISE NOTED, LINEAR DIMENSIONS SHOWN ARE IN MILLIMETERS.

SYMBOL	DESCRIPTION	DATE	APP.

Designed By: R. E. BROWN
Drawn By: R. E. BROWN
Checked By: B.R. THOMAS
Date: 10 MAY 2007
File No. AF0707
I.S.O. Sheet File Name: AF0707B-AB01.dwg
Solicitation Number: –

US Army Corps of Engineers Transatlantic Programs Center

ANA REGIONAL BRIGADE
PAKTIKA, AFGHANISTAN
DETENTION FACILITY
ABBREVIATIONS & SYMBOLS

SHEET REFERENCE NUMBER:
AB–01

$DATE$
$FILE$

A
A-09

CONT., METAL GRAVITY VENT, TYP.

STRUTC. METAL ROOF, TYP.

20MM PLYWOOD DECKING, TYP.

50MM x 200MM RAFTER

(SEE STRUCTURAL)

12 2

12 2

CONT. 20x50 P.T. WOOD SPACER, TYP.

OUTFACE OF CMU WALL & STUD

CONT. 50x100 PLATE, TYP.

ANCHOR BOLT, SEE STRUCT. DWGS FOR SIZE AND SPCNG.

RIGID INSULATION BD

CONT. METAL DRIP, MATCH ROOF COLOR, TYP.

BOTTOM OF FURRING TO TOP OF RAFTER

500 MM

BOTTOM OF FURRING ELEVATION = +3900 A.F.F.

CONT. 50x100 PLATE, TYP.

BATT INSULATION (R-13)

#15 FELT VAPOR BARRIER

PAINTED PLASTER

METAL FACIA AND SOFFIT PANELS, TYP.

180 HOOKED DOWEL AT VERT. REINF

CORNER BEAD (TYP.)

CORNER BEAD (TYP.)

CONTIUOUS MOISTURE BARRIER MEMBRANE, TYP.

650 MM

WELDED WIRE MESH PARTITION

2800

1200

1200

950

FOR VERT. REINF. SIZE & SPACING, SEE PLAN

25 PLASTER FINISH OVER GALV. EXP. METAL LATHE, TYP.

FOR VERT. REINF. SIZE & SPACING, SEE PLAN

25 MM STUCCO

FIN. GRADE, SEE CIVIL DWGS.

TERRAZO TILE

COMPACTED BACKFILL, TYP.

100mm CAPILARY WATER BARRIER

COMPACTED BACKFILL, TYP.

CONT. FOUNDATION WALLS & FOOTINGS, SEE STRUCT. DWGS., TYP.

CONT. FOUNDATION WALLS & FOOTINGS, SEE STRUCT. DWGS., TYP.

A | BUILDING SECTION

CC-A-01 | REF. | SCALE: 1:50

UNLESS OTHERWISE NOTED, LINEAR DIMENSIONS SHOWN ARE IN MILLIMETERS.

SYMBOL	DESCRIPTION	DATE	APR

Date: 10 MAY 2007
File No. AF0707
Contract No. W5GF-06-D-0003
Solicitation Number: _

Designed By: R. E. BROWN
Drawn By: R. E. BROWN
Checked By: B. R. THOMAS
Approved By: B. R. THOMAS

US Army Corps of Engineers
Transatlantic Programs Center

ANA REGIONAL BRIGADE
PAKTIKA, AFGHANISTAN
DETENTION FACILITY
BUILDING CROSS SECTION

SHEET REFERENCE NUMBER:

B-A-06

$DATE$
$FILE$

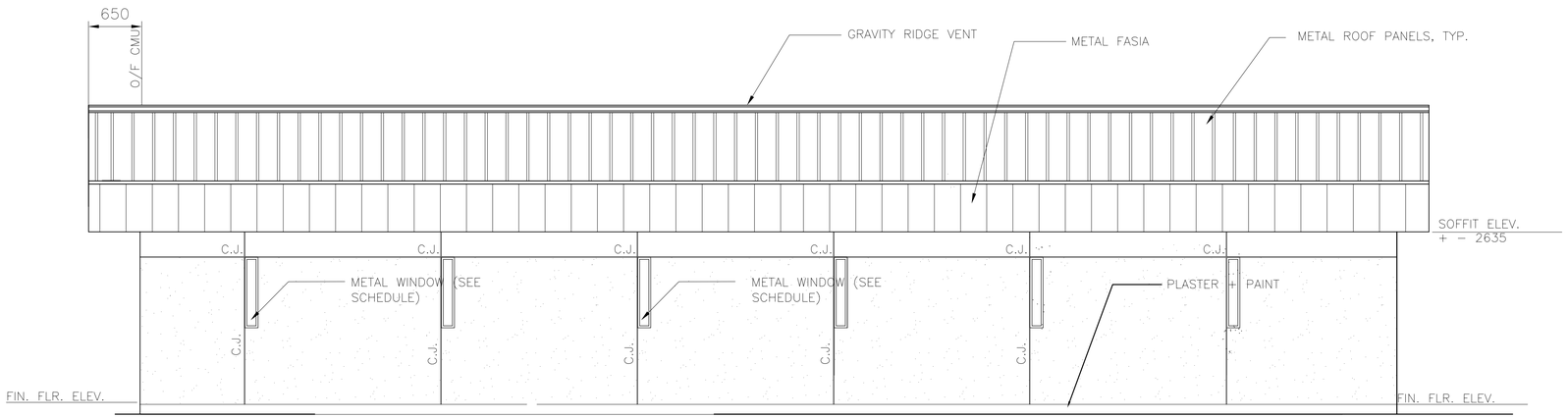

2 ELEVATION

B-A-02 REF. SCALE: 1:50

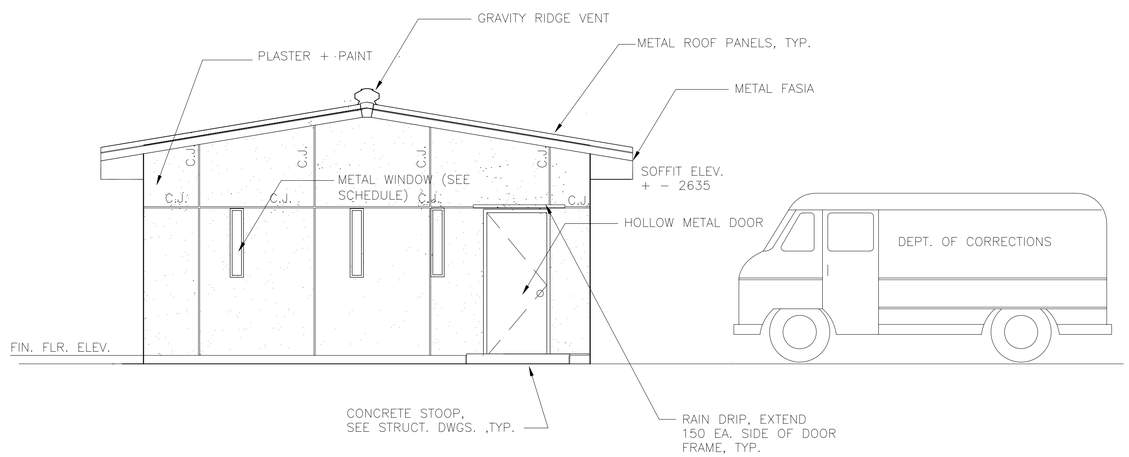

4 ELEVATION

B-A-02 REF. SCALE: 1:50

GRAPHIC SCALE:

1000 0 1000mm

SCALE: 1 = 50

UNLESS OTHERWISE NOTED, LINEAR DIMENSIONS SHOWN ARE IN MILLIMETERS.

SYMBOL	DESCRIPTION	DATE	APR

Designed By: R. E. BROWN
Drawn By: R. BROWN
Checked By: THOMAS A. CROSS
Date: 10 MAY 2007
File No. AF0707
Sheet File Name: AF0707_B-A-04.dwg
Solicitation Number: –

US Army Corps of Engineers
Transatlantic Programs Center

ANA REGIONAL BRIGADE
PAKTIKA, AFGHANISTAN
DETENTION FACILITY
ELEVATIONS

SHEET REFERENCE NUMBER:
B-A-04

$DATE$
$FILE$

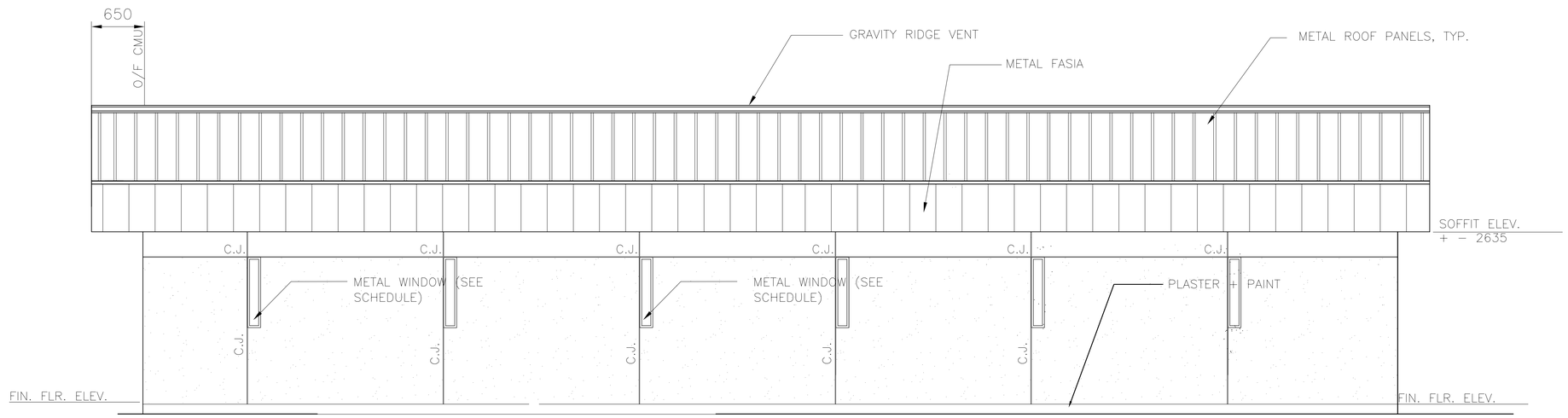

1 ELEVATION

B–A–03 REF. SCALE: 1:50

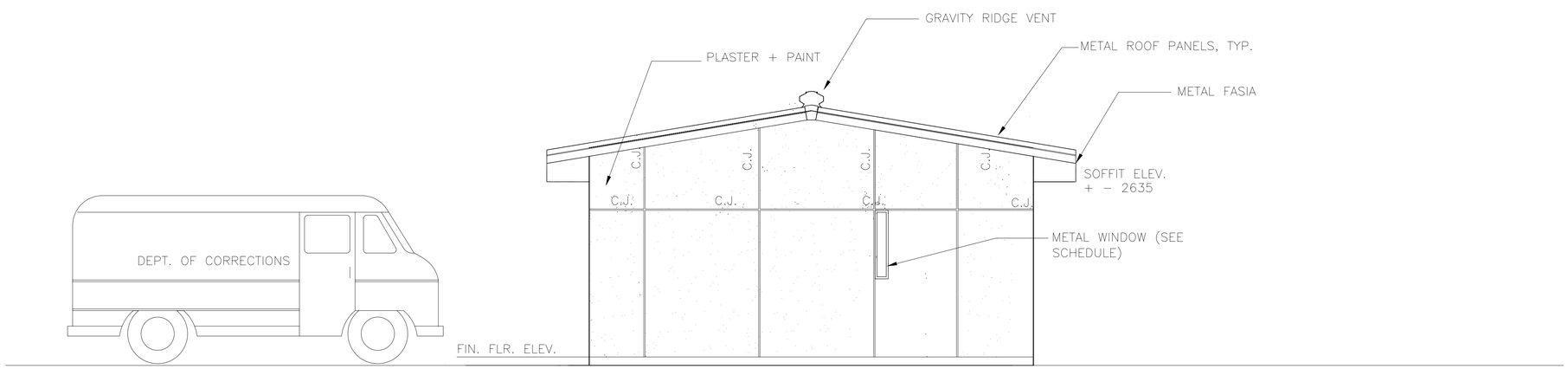

3 ELEVATION

B–A–03 REF. SCALE: 1:50

GRAPHIC SCALE:

1000 0 1000mm

SCALE: 1 = 50

UNLESS OTHERWISE NOTED, LINEAR DIMENSIONS SHOWN ARE IN MILLIMETERS.

SYMBOL	DESCRIPTION	DATE	APR.

Designed By: R. E. BROWN
Drawn By: R. E. BROWN
Checked By: B. R. THOMAS
Date: 10 MAY 2007
File No: AF0707
I.S.O. Sheet File Name: AF0707B – ARO3EL.dwg
Solicitation Number: –

US Army Corps of Engineers Transatlantic Programs Center

ANA REGIONAL BRIGADE
PAKTIKA, AFGHANISTAN
DETENTION FACILITY

ELEVATIONS,

SHEET REFERENCE NUMBER:

B–A–03

$DATE$
$FILE$

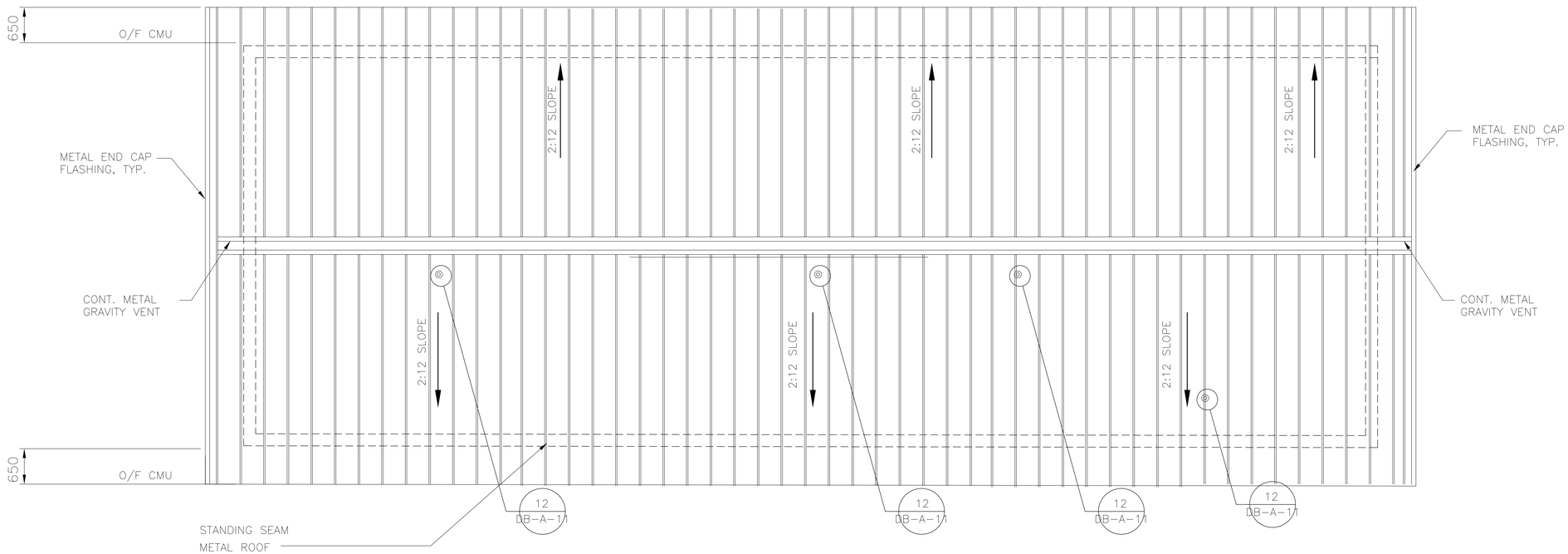

ROOF PLAN

SCALE: 1:50

UNLESS OTHERWISE NOTED, LINEAR DIMENSIONS SHOWN ARE IN MILLIMETERS.

SYMBOL	DESCRIPTION	DATE	APR

Designed By: R. E. BROWN
Drawn By: R. E. BROWN
Checked By: B. R. THOMAS
Date: 10 MAY 2007
File No: AF0707
I.S.O. Sheet File Name: AF0707B – AR02PN.dwg
Solicitation Number: –

US Army Corps of Engineers Transatlantic Programs Center

ANA REGIONAL BRIGADE
PAKTIKA, AFGHANISTAN
DETENTION FACILITY

ROOF PLAN
WIRE CAGE DETAILS AND ELEVATION

SHEET REFERENCE NUMBER:
B–A–02

$DATE$
$FILE$

D SIZE BORDER
32 X 20.5

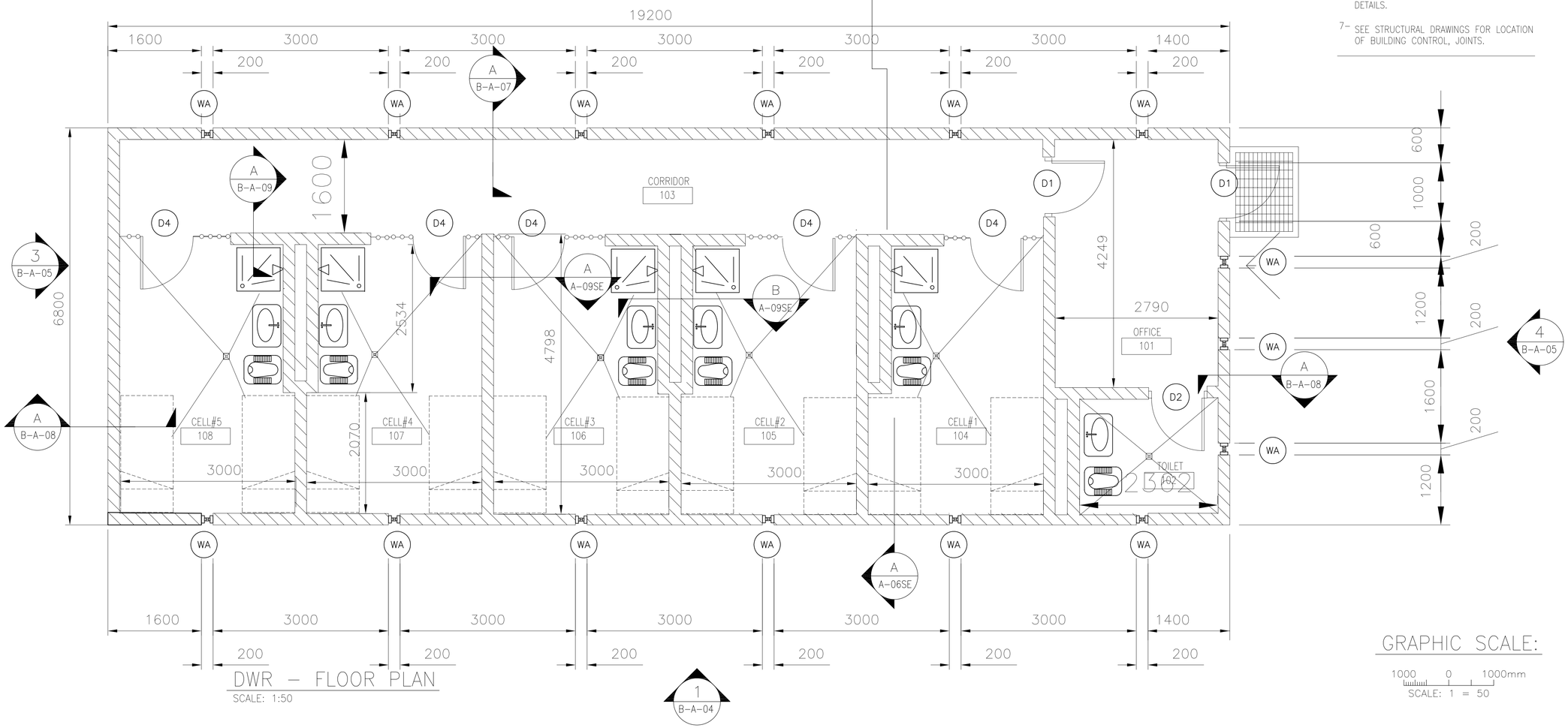

DWR – FLOOR PLAN

SCALE: 1:50

WALL SYMBOL:

CMU WALL

NOTES:

1– ALL WALLS ARE 200MM THK. CMU UNLESS NOTED OTHERWISE.

2– ALL WALLS TERMINATE AT CEILING UNLESS NOTED OTHERWISE. REF. STRUCT. DRWGS.

3– ALL DOOR JAMBS ARE 200MM UNLESS OTHERWISE NOTED.

4– ALL DIMENSIONS ARE TO FACE OF CMU UNLESS NOTED OTHERWISE.

5– ALL VERTICAL DIMENSIONS & LEVELS ARE FROM GROUND FLOOR FINISHED SLAB. THIS ELEVATION IS +0000.

6– SEE DRAWING AR12DT FOR MISCELLANEOUS DETAILS.

7– SEE STRUCTURAL DRAWINGS FOR LOCATION OF BUILDING CONTROL, JOINTS.

SYMBOL	DESCRIPTION	DATE	APP.

Designed By: R. E. BROWN
Drawn By: R. E. BROWN
Checked By: B. R. THOMASAITIS
Date: 10 MAY 2007
File No. AF0707
I.S.O. Sheet File Name: AF0707B – AR01PN.dwg
Solicitation Number: –

US Army Corps of Engineers Transatlantic Programs Center

ANA REGIONAL BRIGADE
PAKTIKA, AFGHANISTAN
DETENTION FACILITY

FLOOR PLAN

GRAPHIC SCALE:

1000 0 1000mm

SCALE: 1 = 50

SHEET REFERENCE NUMBER:

B–A–01

1 FLOOR PLAN

B – A–01 REF. SCALE: 1:100

UNLESS OTHERWISE NOTED, LINEAR DIMENSIONS SHOWN ARE IN MILLIMETERS.

$DATE$
$FILE$

D SIZE BORDER
32 X 20.5

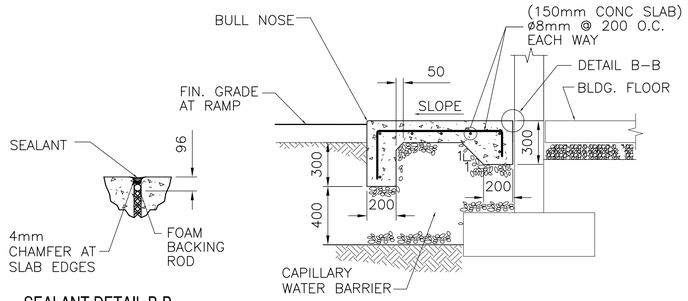

SEALANT DETAIL B-B

SECTION A-A

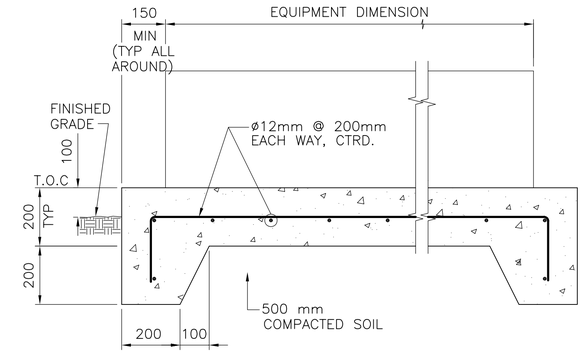

TYPICAL ALL AROUND PERIMETER

NOTE:
PAD DIMENSIONS, ANCHOR BOLT SIZE AND LOCATIONS, AND OTHER EMBEDDED ITEMS SHALL CONFORM TO EQUIPMENT MANUFACTURER'S REQUIREMENTS.

2 CONCRETE PAD FOR EXTERIOR EQUIPMENT

B-SS-04 REF. SCALE: 1:10

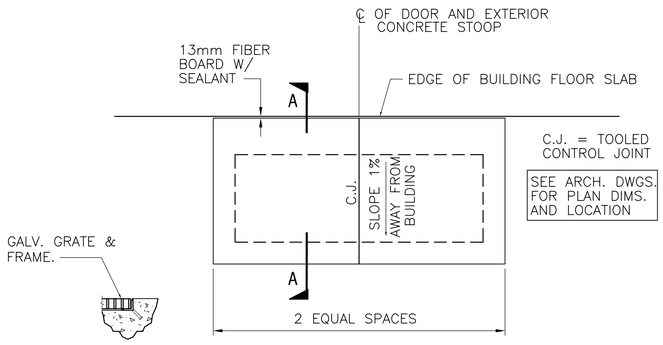

DETAIL D-D

EXTERIOR STOOPS

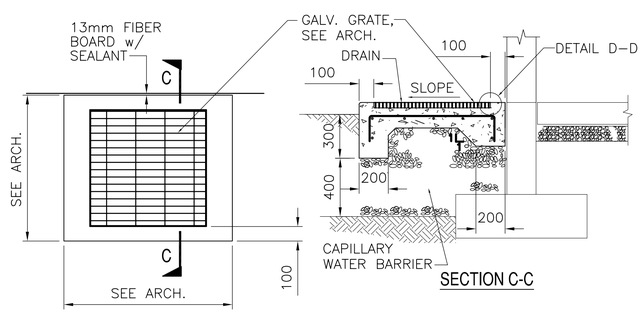

SECTION C-C

EXTERIOR STOOPS w/ GALVANIZED GRATE

1 CONCRETE STOOP/RAMP DETAILS

B-SS-04 REF. SCALE: 1:20

200 0 200mm
SCALE: 1 = 10

UNLESS OTHERWISE NOTED, LINEAR DIMENSIONS SHOWN ARE IN MILLIMETERS.

SYMBOL	DESCRIPTION	DATE	APR

Designed By: D. SMITH
Date: 10 MAY 2007
Drawn By: D. SMITH
File No. AF0707
Checked By: M. THOMPSON
I.S.O. Sheet File Name: AF0707B–SS04DT.DWG
Solicitation Number: –

US Army Corps of Engineers
Transatlantic Programs Center

ANA REGIONAL BRIGADE
PAKTIKA, AFGHANISTAN
DETENTION FACILITY

MISCELLANEOUS EXTERIOR CONCRETE PAD DETIALS

SHEET REFERENCE NUMBER:
B–SS–04

$DATE$
$FILE$

D SIZE BORDER
32 X 20.5

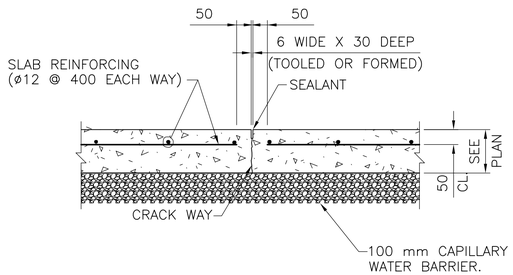

1 SLAB ON GRADE OR PAVEMENT CONTROL JOINT

CB-SS-03 | REF. | SCALE: 1:10

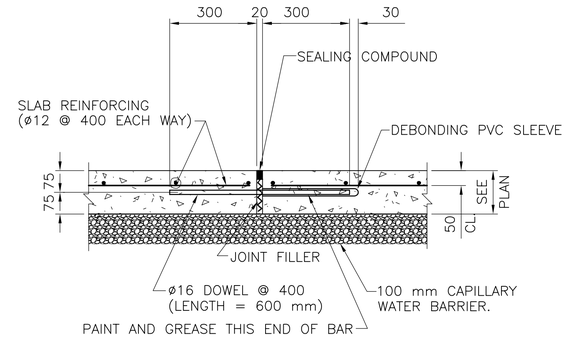

2 PAVEMENT EXPANSION JOINT

CB-SS-03 | REF. | SCALE: 1:10

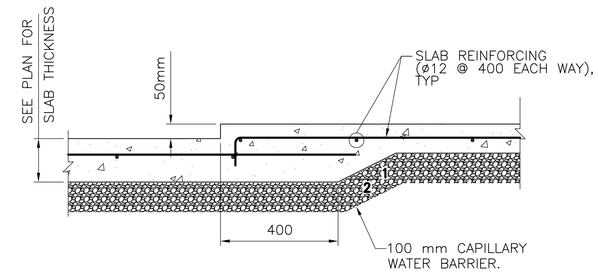

3 DEPRESSED SLAB DETAIL

CB-SS-03 | REF. | SCALE: 1:10

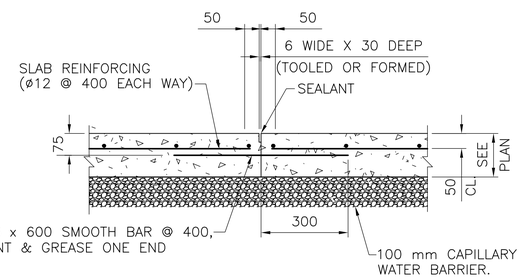

4 SLAB ON GRADE OR PAVEMENT CONSTRUCTION JOINT

CB-SS-03 | REF. | SCALE: 1:10

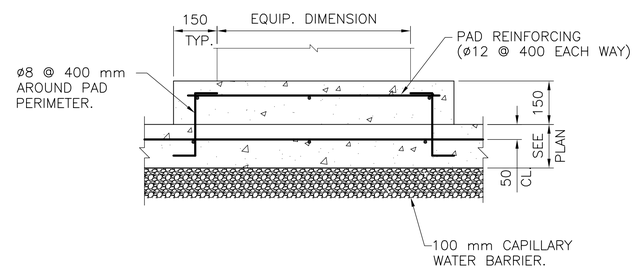

5 INTERIOR EQUIPMENT PAD DETAIL

CB-SS-03 | REF. | SCALE: 1:10

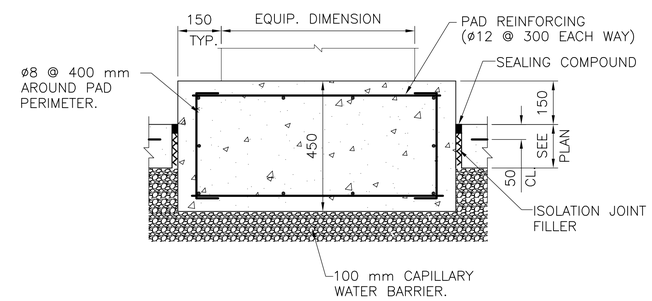

6 LARGE EQUIPMENT ISOLATION PAD DETAIL

CB-SS-03 | REF. | SCALE: 1:10

200 0 200mm
SCALE: 1 = 10

UNLESS OTHERWISE NOTED, LINEAR DIMENSIONS SHOWN ARE IN MILLIMETERS.

SYMBOL	DESCRIPTION	DATE	APR.

Designed By: D. SMITH
Drawn By: D. SMITH
Checked By: M. THOMPSON
Date: 10 MAY 2007
File No. AF0707
F.S.O. Sheet File Name: AF0707CB-SS03DT.DWG
Solicitation Number: –

US Army Corps of Engineers Transatlantic Programs Center

ANA REGIONAL BRIGADE
PAKTIKA, AFGHANISTAN
INTERPRETER FACILITIES
MWR

TYPICAL SLAB ON GRADE DETAILS

SHEET REFERENCE NUMBER:
CB-SS-03

$DATE$
$FILE$

D SIZE BORDER
32 X 20.5

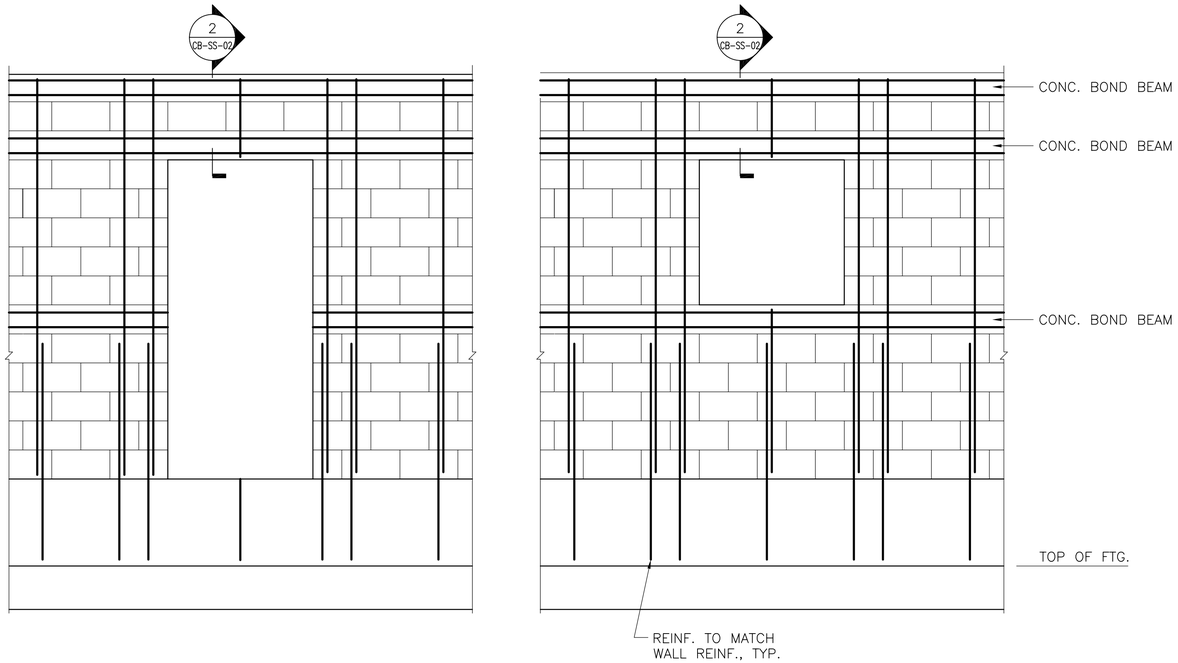

1 | CMU WALL PARTIAL ELEVATION

CB-SS-02 | REF. | SCALE: 1:20

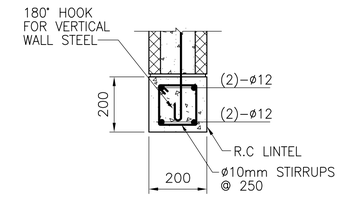

2 | LINTEL SECTION

CB-SS-02 | REF. | SCALE: 1:10

400 0 400mm
SCALE: 1 = 20

200 0 200mm
SCALE: 1 = 10

UNLESS OTHERWISE NOTED, LINEAR DIMENSIONS SHOWN ARE IN MILLIMETERS.

SYMBOL	DESCRIPTION	DATE	APPR.

Designed By:
Drawn By:
Checked By:
Date: 10 MAY 2007
File No. AF0707
T.S.O. Sheet File Name: AF0707CB-SS02D1.DWG
Solicitation Number: –

US Army Corps of Engineers
Transatlantic Programs Center

ANA REGIONAL BRIGADE
PAKTIKA, AFGHANISTAN
INTERPRETER FACILITIES
MWR

TYPICAL MASONRY DETAILS

SHEET REFERENCE NUMBER:
CB-SS-02

$DATE$
$FILE$

D SIZE BORDER
32 X 20.5

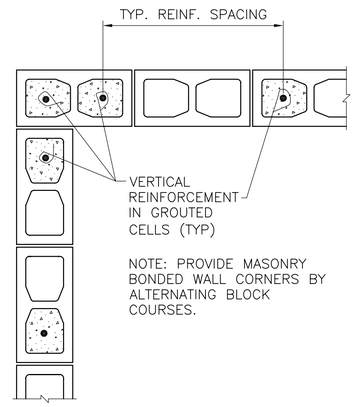

1 TYPICAL CMU CORNER WALL REINFORCING DETAIL

CB-SS-01 REF. SCALE: 1:10

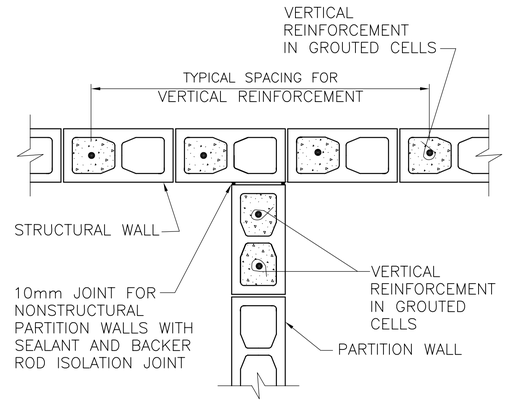

2 TYPICAL CMU PARTITION WALL REINFORCING DETAIL

CB-SS-01 REF. SCALE: 1:10

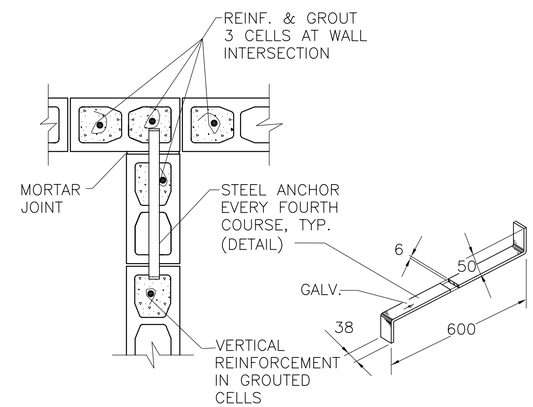

3 TYPICAL CMU STRUCTURAL WALL REINFORCING DETAIL

CB-SS-01 REF. SCALE: 1:10

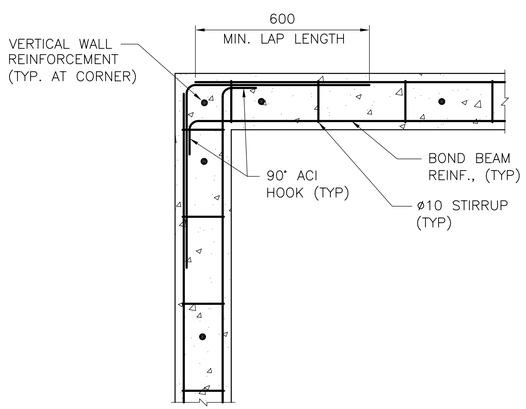

4 TYPICAL CIP CONCRETE BOND BEAM REINFORCING DETAIL

CB-SS-01 REF. SCALE: 1:10

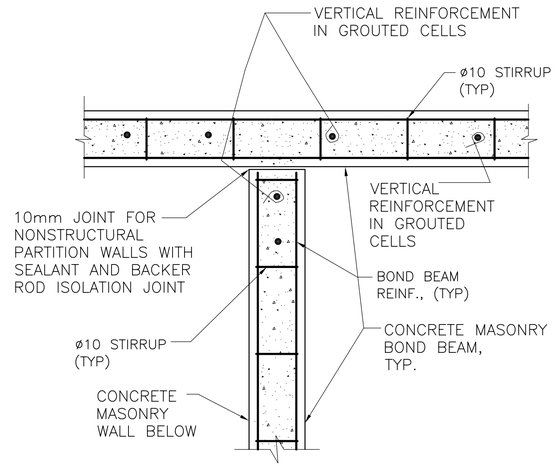

5 TYPICAL CIP CONCRETE BOND BEAM REINFORCING DETAIL

CB-SS-01 REF. SCALE: 1:10

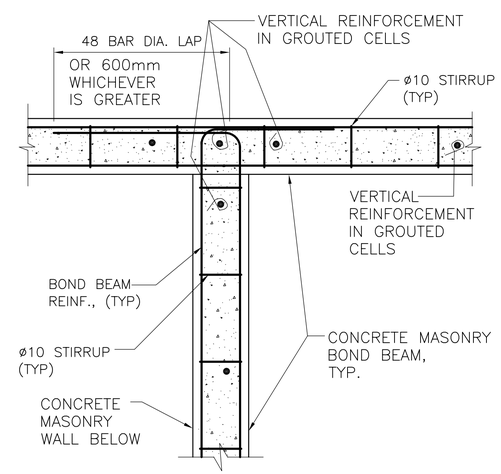

6 TYPICAL CIP CONCRETE BOND BEAM REINFORCING DETAIL

CB-SS-01 REF. SCALE: 1:10

UNLESS OTHERWISE NOTED, LINEAR DIMENSIONS SHOWN ARE IN MILLIMETERS.

SYMBOL	DESCRIPTION	DATE	APPR.

Designed By:
Drawn By:
Checked By:
Date: 10 MAY 2007
File No. AF0707
F.S.O. Sheet File Name: AF0707CB-SS01DT.DWG
Solicitation Number: –

US Army Corps of Engineers Transatlantic Programs Center

ANA REGIONAL BRIGADE
PAKTIKA, AFGHANISTAN
INTERPRETER FACILITIES
MWR

TYPICAL MASONRY DETAILS

SHEET REFERENCE NUMBER:
CB-SS-01

$DATE$
$FILE$

D SIZE BORDER
32 X 20.5

GENERAL:

1. CONTRACTOR SHALL VERIFY ALL DIMENSIONS AND CONDITIONS AFFECTING THE WORK AT JOBSITE.

2. ALL STRUCTURAL WORK AND MATERIALS SHALL CONFORM TO THE REQUIREMENTS OF THE PROJECT SPECIFICATIONS.

3. FOR LOCATION AND DIMENSIONS OF GROOVES, REGLETS, SLEEVES, OPENINGS, AND EMBEDDED OR ATTACHED ITEMS, REFER TO ARCHITECTURAL, MECHANICAL, ELECTRICAL, AND PIPING DRAWINGS.

CODES:

1. ALL PARTS SHALL BE FURNISHED AND ERECTED ACCORDING TO THE APPLICABLE CODES AND SPECIFICATIONS OF THE FOLLOWING:

AMERICAN CONCRETE INSTITUTE	(ACI)
AMERICAN INSTITUTE OF STEEL CONSTRUCTION	(AISC)
AMERICAN IRON AND STEEL INSTITUTE	(AISI)
AMERICAN WELDING SOCIETY	(AWS)
MINIMUM DESIGN LOADS FOR BUILDINGS AND OTHER STRUCTURES	(ASCE)
INTERNATIONAL BUILDING CODE	(IBC)

DESIGN LOADS:

1. ROOF LOADING

A. LIVE LOAD 100 KG/SQ METER (20 PSF)
B. SNOW LOAD 75 KG/SQ METER (15 PSF)
C. COLLATERAL LOAD 50 KG/SQ METER (10 PSF)

2. WIND LOADING

A. BASIC WIND SPEED 145 KM/HR (90 MPH)
B. EXPOSURE CATEGORY "B"
C. IMPORTANCE FACTOR, Iw = 1.00
D. BUILDING CATEGORY "II"

3. SEISMIC LOADING:

A. Ss = 1.28g
B. S1 = 0.51g
C. SEISMIC USE GROUP "I"
D. SITE CLASSIFICATION "D"
E. IMPORTANCE FACTOR I = 1.0

BASIC SEISMIC FORCE RESISTING SYSTEM:

LOAD BEARING CMU WALL SYSTEM WITH SPECIAL REINFORCED MASONRY SHEAR WALLS

DESIGN BASE SHEAR: 0.17W

ANALYSIS PROCEDURE: EQUIVALENT LATERAL FORCE METHOD

FOUNDATIONS:

1. ALL FOOTINGS SHALL BEAR ON SOIL CAPABLE OF SUSTAINING THE LOADS.

2. CONTINUOUS WALL FOOTINGS WERE DESIGNED FOR A SOIL BEARING CAPACITY OF 9765 KG/SQ. METER (2000 PSF). ISOLATED COLUMN FOOTINGS WERE DESIGNED FOR A MAXIMUM BEARING CAPACITY OF 9765 KG/SQ. METER (2000 PSF).

3. ELEVATIONS SHOWN ON PLANS FOR TOP OF FOOTINGS ARE MINIMUM DEPTH. DIFFERENT OR UNUSUAL CONDITIONS SHALL BE REPORTED TO THE CONTRACTING OFFICER.

4. ALL FOOTING REINFORCEMENT SHALL BE SECURELY SUPPORTED ABOVE GROUND. CONCRETE BLOCK AND BROKEN TILE SHALL NOT BE USED. CONCRETE OR CLAY BRICK MAY BE USED.

CONCRETE:

1. STRUCTURAL CONCRETE FOR THE BUILDING STRUCTURE SHALL HAVE THE FOLLOWING PROPERTIES:

FOOTINGS: f'c = 210 KG/SQ. CM (3,000 PSI) AT 28 DAYS
SLABS: f'c = 210 KG/SQ. CM (3,000 PSI) AT 28 DAYS

2. ALL REINFORCING STEEL SHALL BE DEFORMED BARS CONFORMING TO ASTM A615 GRADE 60 UNLESS NOTED OTHERWISE.

3. LOCATION OF ALL CONCRETE JOINTS, OTHER THAN THOSE SPECIFIED, SHALL BE APPROVED BY THE CONTRACTING OFFICER BEFORE CONCRETE PLACEMENT.

4. MINIMUM PROTECTIVE COVER OF REINFORCEMENT (SEE DETAILS) SHALL BE AS FOLLOWS:

FOOTINGS, 75mm CLEAR BOTTOM AND SIDES, 40mm CLEAR TOP.
CONCRETE SLABS-ON-GRADE, 25mm CLEAR TOP.
WALLS, 40mm CLEAR SIDES.
CONCRETE PIERS, 40mm CLEAR TO TIES.
CONCRETE BOND BEAMS. 20mm CLEAR TO TIES.

5. MINIMUM CONCRETE SPLICES AND HOOKS FOR REINFORCING STEEL SHALL CONFORM TO ACI 318, CURRENT EDITION.

6. CONCRETE WORK SHALL BE COORDINATED WITH DRAINS, UNDERGROUND UTILITIES, MECHANICAL, ELECTRICAL, AND ARCHITECTURAL PLANS. CONCRETE SHALL NOT BE CAST UNTIL THESE ITEMS HAVE BEEN INSTALLED AND ACCEPTED.

7. CONCRETE FINISHES SHALL BE PROVIDED AS DESCRIBED IN THE SPECIFICATIONS.

8. CORNER BARS SHALL BE PROVIDED AT ALL INTERSECTIONS; BAR SIZE AND SPACING TO MATCH LARGER BAR.

9. SLABS ON GRADE SHALL BE REINFORCED AT ALL PENETRATIONS AND RE-ENTRANT CORNERS. PLACE 3-ø10 x 1.0 METER AROUND FLOOR DRAINS. PLACE 2-ø12 x 1.0 METER (MINIMUM) AT RE-ENTRANT CORNERS.

STRUCTURAL STEEL:

1. STRUCTURAL STEEL SHALL BE FABRICATED AND ERECTED IN ACCORDANCE WITH THE AMERICAN INSTITUTE OF STEEL CONSTRUCTION, "SPECIFICATION FOR STRUCTURAL STEEL BUILDINGS", 1989 (AISC ASD MANUAL, 9TH EDITION).

2. STEEL SHALL CONFORM TO THE FOLLOWING REQUIREMENTS UNLESS NOTED OTHERWISE:

MISCELLANEOUS PLATES AND ANGLES - ASTM A36 (Fy = 36 KSI)
RECTANGULAR HSS - ASTM A500, GRADE B (Fy = 46 KSI)
"W" SHAPES - ASTM A992

3. NO STRUCTURAL STEEL SHALL BE FABRICATED OR ERECTED UNTIL SHOP DRAWINGS HAVE BEEN APPROVED.

4. NO HOLES OTHER THAN THOSE SPECIFICALLY DETAILED SHALL BE ALLOWED THROUGH STRUCTURAL STEEL MEMBERS. CUTTING OF STEEL SHALL NOT BE PERMITTED WITHOUT APPROVAL OF THE CONTRACTING OFFICER.

5. THE CONTRACTOR SHALL VERIFY ALL SHOP DRAWING DIMENSIONS WITH THE STRUCTURAL AND ARCHITECTURAL PLANS AND DETAILS, AND WITH FIELD DIMENSIONS OF COLUMN LAYOUT.

7. BOLTED CONNECTIONS SHALL BE MADE WITH HIGH STRENGTH BOLTS CONFORMING TO ASTM A325, 20mm DIAMETER MINIMUM UNLESS NOTED OTHERWISE.

8. CONNECTIONS NOT SHOWN ON DRAWINGS SHALL BE DESIGNED BY THE FABRICATOR. CONNECTIONS SHALL BE SELECTED TO SUPPORT ONE HALF THE TOTAL UNIFORM LOAD CAPACITY SHOWN IN THE ALLOWABLE LOAD TABLES, PART 2 OF LATEST AISC MANUAL FOR THE GIVEN BEAM, SPAN, AND GRADE OF STEEL SPECIFIED. WHERE POSSIBLE, DOUBLE ANGLE CONNECTIONS SHALL BE USED.

MASONRY:

1. ENGINEERED MASONRY IS DESIGNED IN ACCORDANCE WITH "BUILDING CODE REQUIREMENTS FOR MASONRY STRUCTURES" (ACI 530-99/ ASCE 5-99/TMS 402-99).

2. UNITS: ASTM C90, TYPE (I) (NORMAL WEIGHT, MOISTURE CONTROLLED) (OR EQUIVALENT DIN, ACI OR EN STANDARDS) MORTAR: ASTM C270 TYPE S (OR EQUIVALENT DIN, ACI OR EN STANDARDS)

3. FULLY GROUT ALL CELLS CONTAINING REINFORCING STEEL OR ANCHORS UNLESS NOTED OTHERWISE.

4. USE 50 db FULL CONTACT LAP SPLICES FOR REINFORCING STEEL IN CMU WALLS UNLESS NOTED OTHERWISE.

5. SEE SPECIFICATION 04200 FOR MASONRY BLOCK. ALL VERTICAL CELLS OF MASONRY BLOCK WITH REINFORCING SHALL BE GROUTED SOLID TO FORM A COMPOSITE MASONRY AND STEEL ASSEMBLY.

6. PROVIDE AN ADDITIONAL VERTICAL REINFORCEMENT AT EACH SIDE OF INTERSECTION OF EXTERIOR WALLS, AND AT EACH SIDE OF ALL MASONRY OPENINGS GREATER THAN 250mm IN WIDTH. IN OPENINGS WIDER THAN 600mm, PROVIDE ADDITIONAL VERTICAL REINFORCEMENT IN TWO ADJACENT CELLS ON EACH SIDE OF THE OPENING. ADDED VERTICAL REINFORCEMENT SHALL BE CONTINUOUS FOR THE FULL HEIGHT OF WALL.

7. PROVIDE BOND BEAMS AT 1200mm MAXIMUM VERTICAL SPACING (EXCEPT AT RESTROOM AND SHOWER STALL PARTITION WALLS).

8. PROVIDE LINTEL ABOVE ALL MASONRY OPENINGS AS SHOWN IN DETAIL 3/SS-02.

9. PROVIDE A BOND BEAM BELOW ALL MASONRY OPENINGS AND EXTEND A MINIMUM OF 400mm BEYOND EACH SIDE OF OPENING.

TIMBER:

1. ALL TIMBER DESIGN AND CONSTRUCTION SHALL BE DONE IN ACCORDANCE WITH THE LATEST EDITION OF THE TIMBER CONSTRUCTION MANUAL OF THE AMERICAN INSTITUTE OF TIMBER CONSTRUCTION. ALL STRUCTURAL TIMBER MEMBERS SHALL HAVE THE FOLLOWING MINIMUM PROPERTIES:

A. BENDING	Fb = 74 Kg/CM (SINGLE MEMBER USE)
	Fb = 84 Kg/CM (REPETITIVE MEMBER USE)
B. TENSION	Ft = 49 Kg/CM (PARALLEL TO GRAIN)
C. SHEAR	Fv = 4 Kg/CM (HORIZONTAL SHEAR)
D. COMPRESSION	Fc = 21 Kg/CM (PERPENDICULAR TO GRAIN)
	Fc = 21 Kg/CM (PARALLEL TO GRAIN)
E. MODULUS OF ELASTICITY	E = 843,683 Kg/CM

UNLESS OTHERWISE NOTED, LINEAR DIMENSIONS SHOWN ARE IN MILLIMETERS.

SYMBOL	DESCRIPTION	DATE	APR.

Designed By:
Drawn By:
Checked By:
Date: 10 MAY 2007
File No. AF0707
F.S.O. Sheet File Name: AF0707CB-SS00DT.DWG
Solicitation Number: -

US Army Corps of Engineers Transatlantic Programs Center

ANA REGIONAL BRIGADE
PAKTIKA, AFGHANISTAN
INTERPRETER FACILITIES
MWR

TYPICAL MASONRY DETAILS

SHEET REFERENCE NUMBER:
CB-SS-00

$DATE$
$FILE$

D SIZE BORDER
32 X 20.5

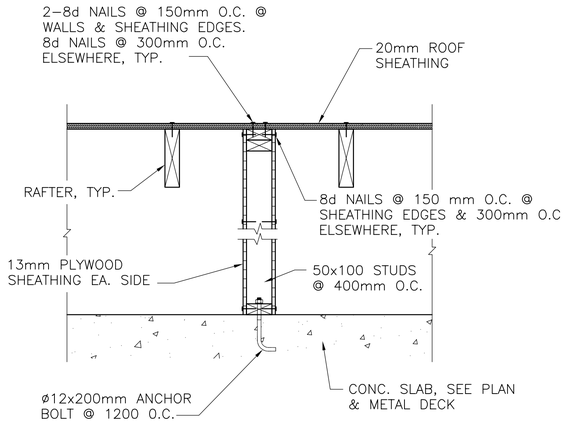

1 SECTION AT SHEAR WALL

CB–S–03 REF. SCALE: 1:10

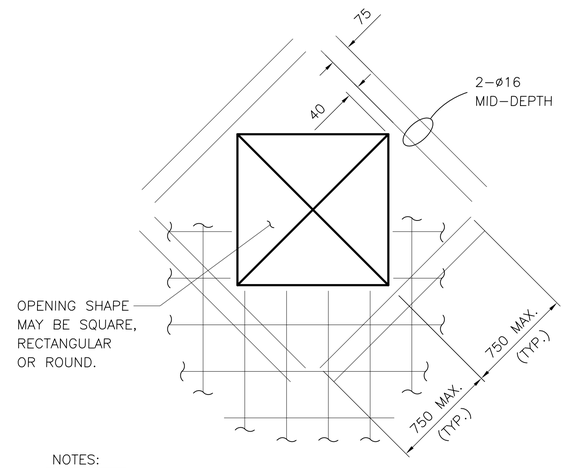

NOTES:

1. ALL TOP & BOTTOM SLAB BARS INTERRUPTED BY THE OPENING SHALL BE REPLACED WITH ADDITIONAL REINFORCING EQUAL TO THAT INTERRUPTED. PLACE HALF OF THE ADDITIONAL REINFORCING ON EACH SIDE OF OPENING AND EXTEND IT TO THE SAME LENGTH AS REQUIRED FOR THE INTERRUPTED REINFORCING.

2. BOXED OUT OPENINGS, RECESSED BOXES & PIPE SLEEVE CLUSTERS SHALL BE TREATED AS SLAB OPENINGS.

2 REINFORCING AROUND STRUCTURAL SLAB OPENING

CB–S–07 REF. SCALE: 1:10

200 0 200mm
SCALE: 1 = 10

UNLESS OTHERWISE NOTED, LINEAR DIMENSIONS SHOWN ARE IN MILLIMETERS.

SYMBOL	DESCRIPTION	DATE	APPR.

Designed By:
Drawn By:
Checked By:
Date: 10 MAY 2007
File No. AF0707
F.S.O. Sheet File Name: AF0707CB–SF07SE.DWG
Solicitation Number: –

US Army Corps of Engineers
Transatlantic Programs Center

ANA REGIONAL BRIGADE
PAKTIKA, AFGHANISTAN
INTERPRETER FACILITIES
MWR

FRAMING SECTIONS

SHEET REFERENCE NUMBER:
CB–S–07

$DATE$
$FILE$

D SIZE BORDER
32 X 20.5

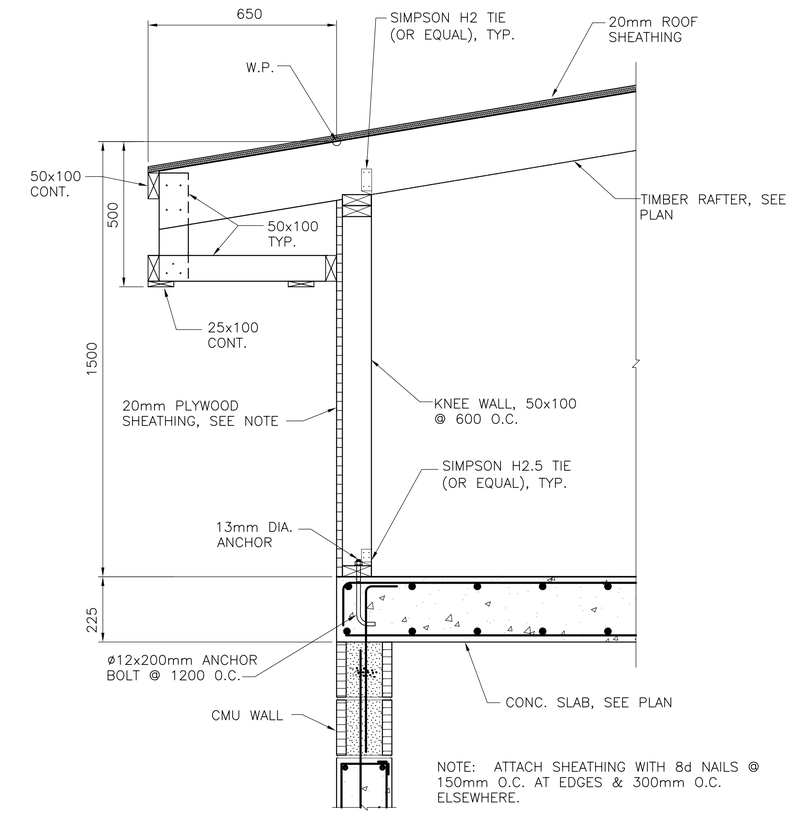

1 ROOF SECTION AT EXTERIOR CMU WALL

CB-S-02 CB-S-03 REF. SCALE: 1:10

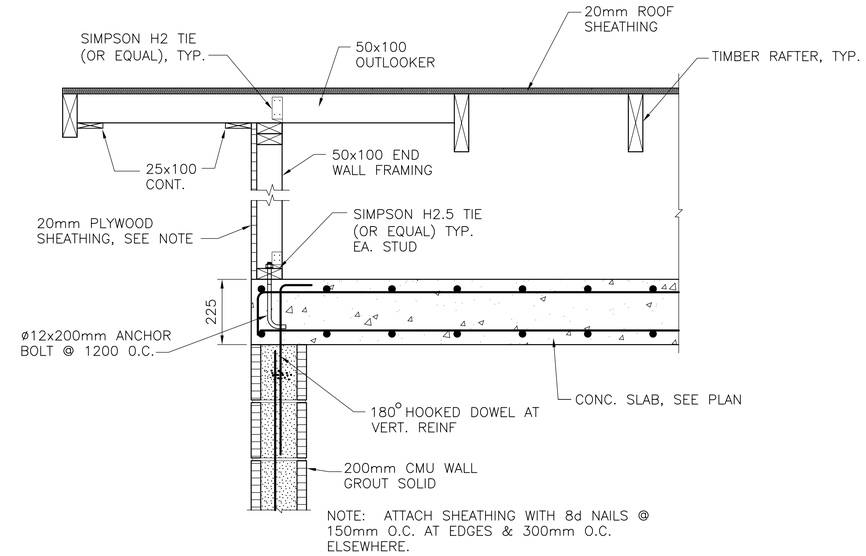

2 ROOF SECTION AT EXTERIOR CMU WALL

CB-S-02 CB-S-03 REF. SCALE: 1:10

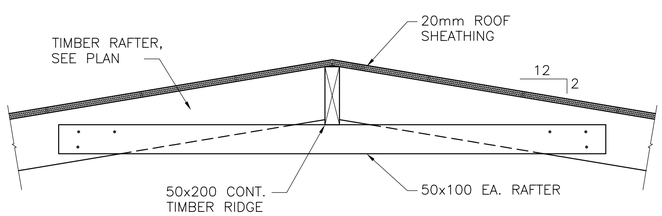

3 ROOF DETAIL

CB-S-03 REF. SCALE: 1:10

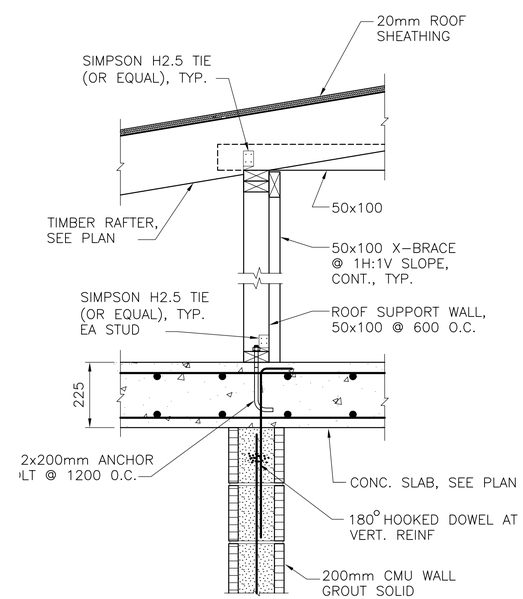

4 ROOF SECTION AT EXTERIOR CMU WALL

CB-S-02 CB-S-03 REF. SCALE: 1:10

200 0 200mm
SCALE: 1 = 10

SCALE: SCALE
UNLESS OTHERWISE NOTED, LINEAR DIMENSIONS SHOWN ARE IN MILLIMETERS.

SYMBOL	DESCRIPTION	DATE	APPR.

Designed By:
Drawn By:
Checked By:
Date: 10 MAY 2007
File No. AF0707
F.S.O. Sheet File Name: AF0707CB-SF06SE.DWG
Solicitation Number: –

US Army Corps of Engineers Transatlantic Programs Center

ANA REGIONAL BRIGADE
PAKTIKA, AFGHANISTAN
INTERPRETER FACILITIES
MWR

FRAMING SECTIONS

SHEET REFERENCE NUMBER:
CB-S-06

$DATE$
$FILE$

D SIZE BORDER
32 X 20.5

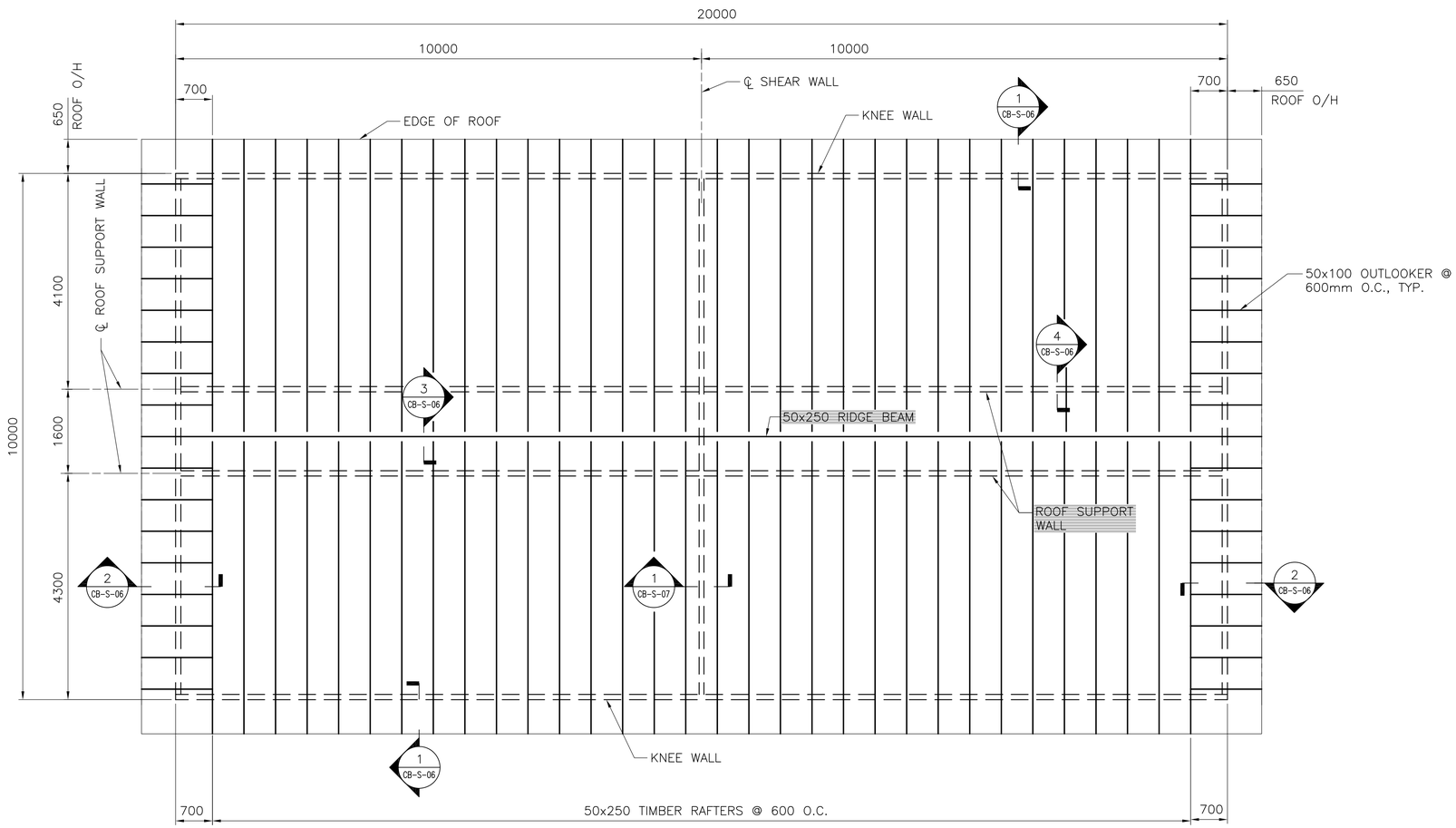

1 ROOF FRAMING PLAN

CB-S-03 REF. SCALE: 1:100

2000 0 2000mm
SCALE: 1 = 100

UNLESS OTHERWISE NOTED, LINEAR DIMENSIONS SHOWN ARE IN MILLIMETERS.

SYMBOL	DESCRIPTION	DATE	APPR.

Designed By:
Drawn By:
Checked By:
Date: 10 MAY 2007
File No. AF0707
I.S.O. Sheet File Name: AF0707CB-SF03PN.DWG
Solicitation Number: –

US Army Corps of Engineers
Transatlantic Programs Center

ANA REGIONAL BRIGADE
PAKTIKA, AFGHANISTAN
INTERPRETER FACILITIES
MWR

ROOF FRAMING PLAN

SHEET REFERENCE NUMBER:
CB-S-03

$DATE$
$FILE$

D SIZE BORDER
32 X 20.5

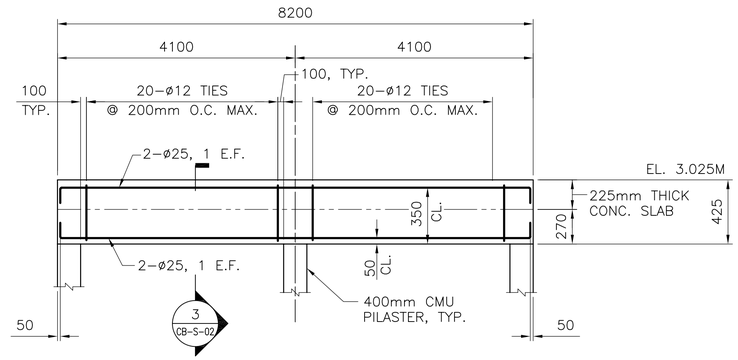

2 ROOF BEAM REINFORCEMENT

CB-S-02 REF. SCALE: N.T.S.

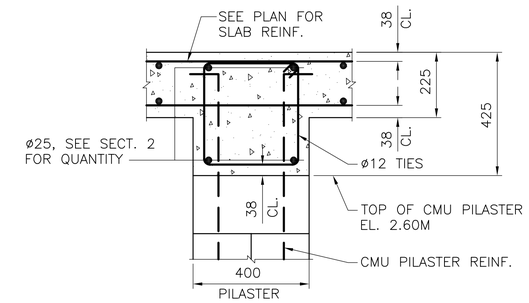

3 SECTION

CB-S-02 REF. SCALE: 1:10

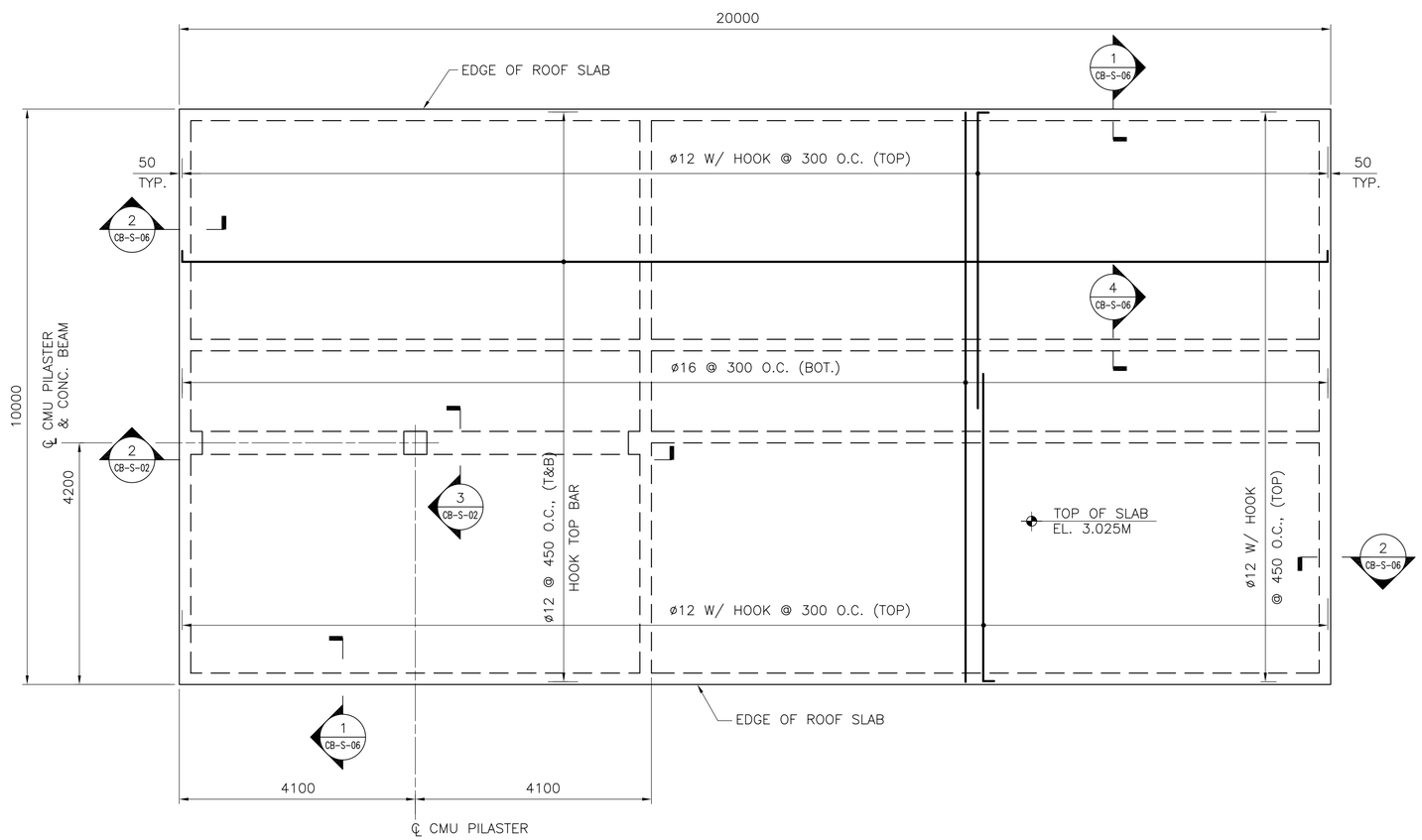

1 CEILING FRAMING PLAN

CB-S-02 REF. SCALE: 1:50

200 0 200mm
SCALE: 1 = 10

1000 0 1000mm
SCALE: 1 = 50

UNLESS OTHERWISE NOTED, LINEAR DIMENSIONS SHOWN ARE IN MILLIMETERS.

SYMBOL	DESCRIPTION	DATE	APR.

Designed By:
Drawn By:
Checked By:
Date: 10 MAY 2007
File No. AF0707
I.S.O. Sheet File Name: AF0707CB-SF02PN.DWG
Solicitation Number: –

US Army Corps of Engineers
Transatlantic Programs Center

ANA REGIONAL BRIGADE
PAKTIKA, AFGHANISTAN
INTERPRETER FACILITIES
MWR

CEILING FRAMING PLAN

SHEET REFERENCE NUMBER:
CB–S–02

$DATE$
$FILE$

D SIZE BORDER
32 X 20.5

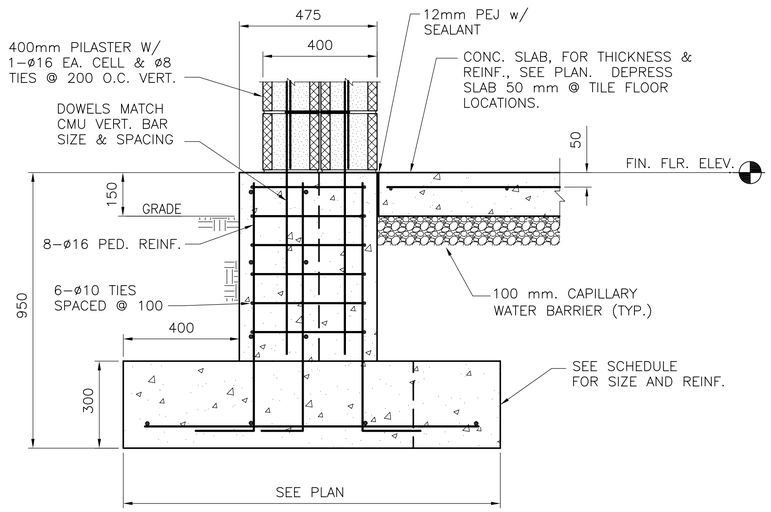

1 SECTION AT EXTERIOR CMU WALL

CB–S–01 REF. SCALE: 1:10

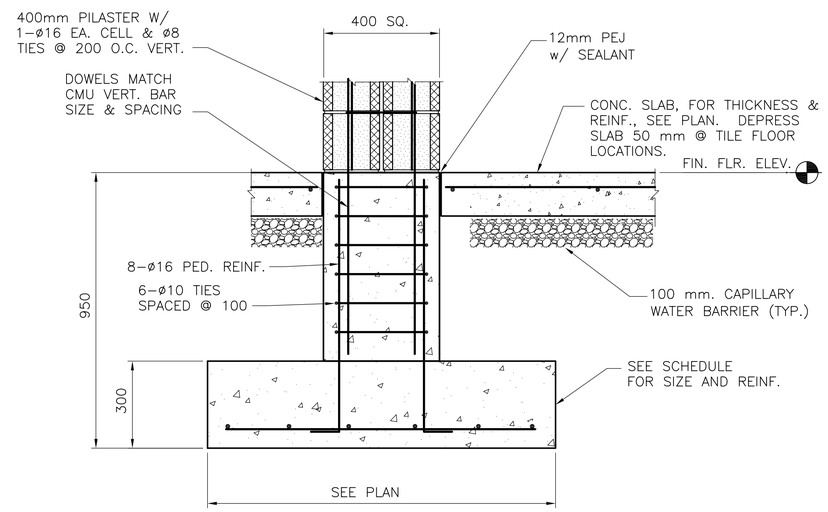

2 SECTION AT INTERIOR CMU WALL

CB–S–01 REF. SCALE: 1:10

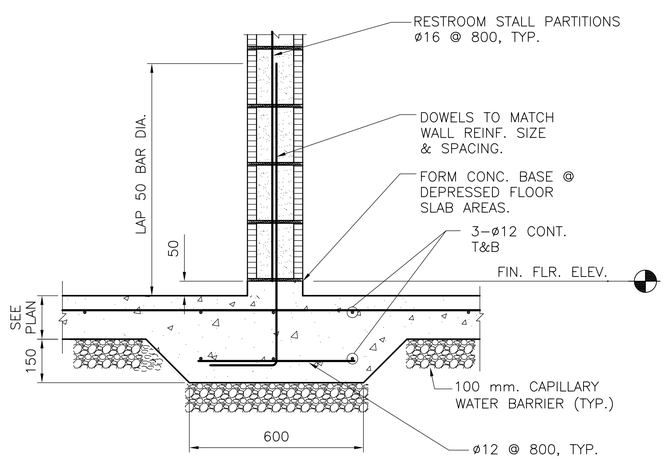

3 SECTION AT RESTROOM STALL PARTITION WALL

CB–S–01 REF. SCALE: 1:10

200 0 200mm
SCALE: 1 = 10

UNLESS OTHERWISE NOTED, LINEAR DIMENSIONS SHOWN ARE IN MILLIMETERS.

SYMBOL	DESCRIPTION	DATE	APR.

Designed By:
Drawn By:
Checked By:
Date: 10 MAY 2007
File No. AF0707
I.S.O. Sheet File Name: 4f0707CB–SB05SE.DWG
Solicitation Number: –

US Army Corps of Engineers Transatlantic Programs Center

ANA REGIONAL BRIGADE
PAKTIKA, AFGHANISTAN
INTERPRETER FACILITIES
MWR

FOUNDATION SECTIONS

SHEET REFERENCE NUMBER:
CB–S–05

$DATE$
$FILE$

D SIZE BORDER
32 X 20.5

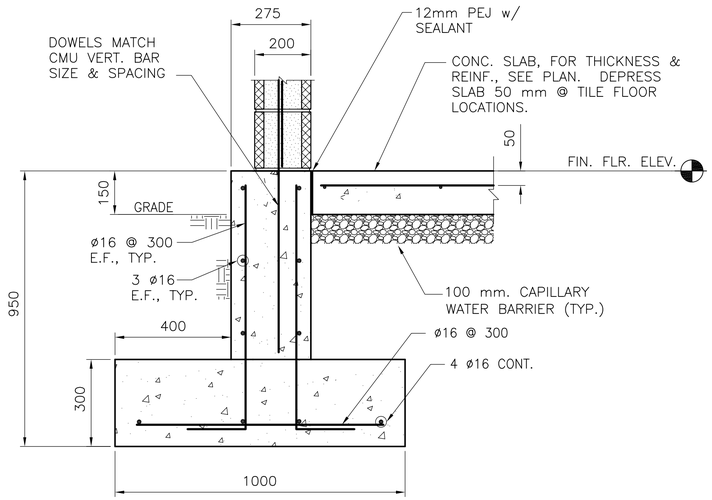

1 SECTION AT EXTERIOR CMU WALL

CB-S-01 REF. SCALE: 1:10

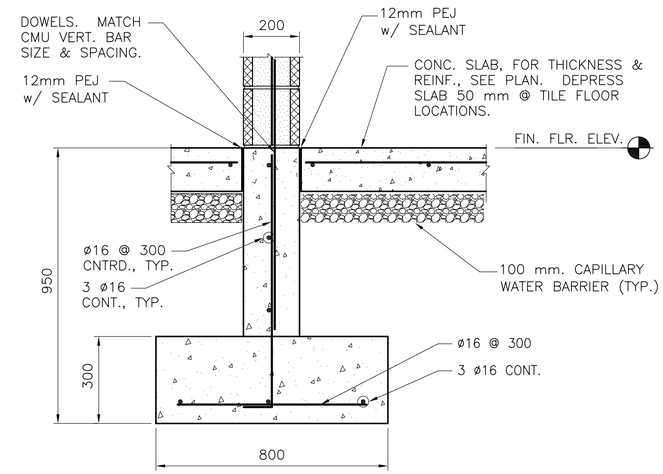

2 SECTION AT INTERIOR CMU WALL

CB-S-01 REF. SCALE: 1:10

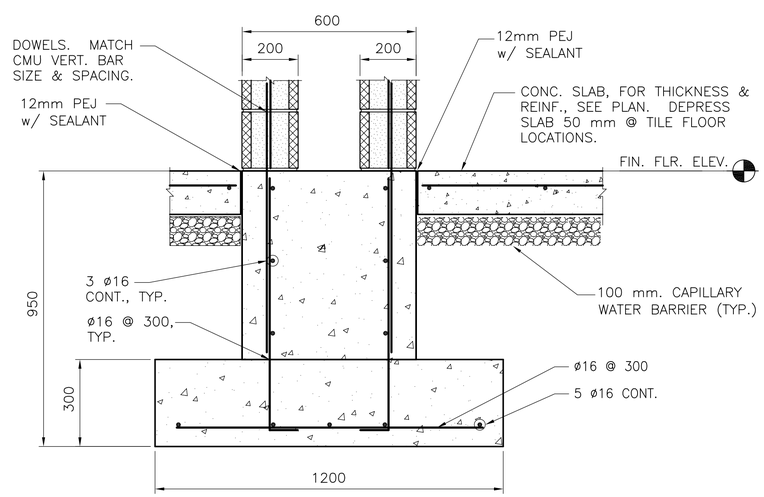

3 SECTION AT INTERIOR CHASE WALL

CB-S-01 REF. SCALE: 1:10

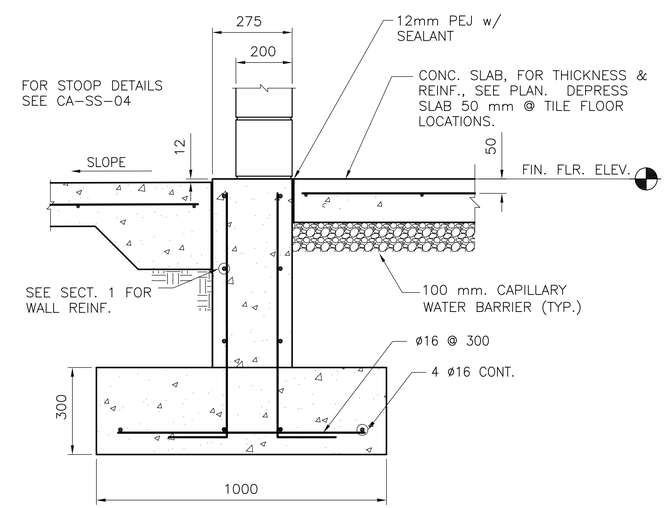

4 SECTION AT EXTERIOR DOOR

CB-S-01 REF. SCALE: 1:10

200 0 200mm
SCALE: 1 = 10

UNLESS OTHERWISE NOTED, LINEAR DIMENSIONS SHOWN ARE IN MILLIMETERS.

SYMBOL	DESCRIPTION	DATE	APPR.

Designed By:
Drawn By:
Checked By:
Date: 10 MAY 2007
File No. AF0707
I.S.O. Sheet File Name: AF0707CB-SB04SE.DWG
Solicitation Number: –

US Army Corps of Engineers Transatlantic Programs Center

ANA REGIONAL BRIGADE
PAKTIKA, AFGHANISTAN
INTERPRETER FACILITIES
MWR

FOUNDATION SECTIONS

SHEET REFERENCE NUMBER:
CB-S-04

$DATE$
$FILE$

D SIZE BORDER
32 X 20.5

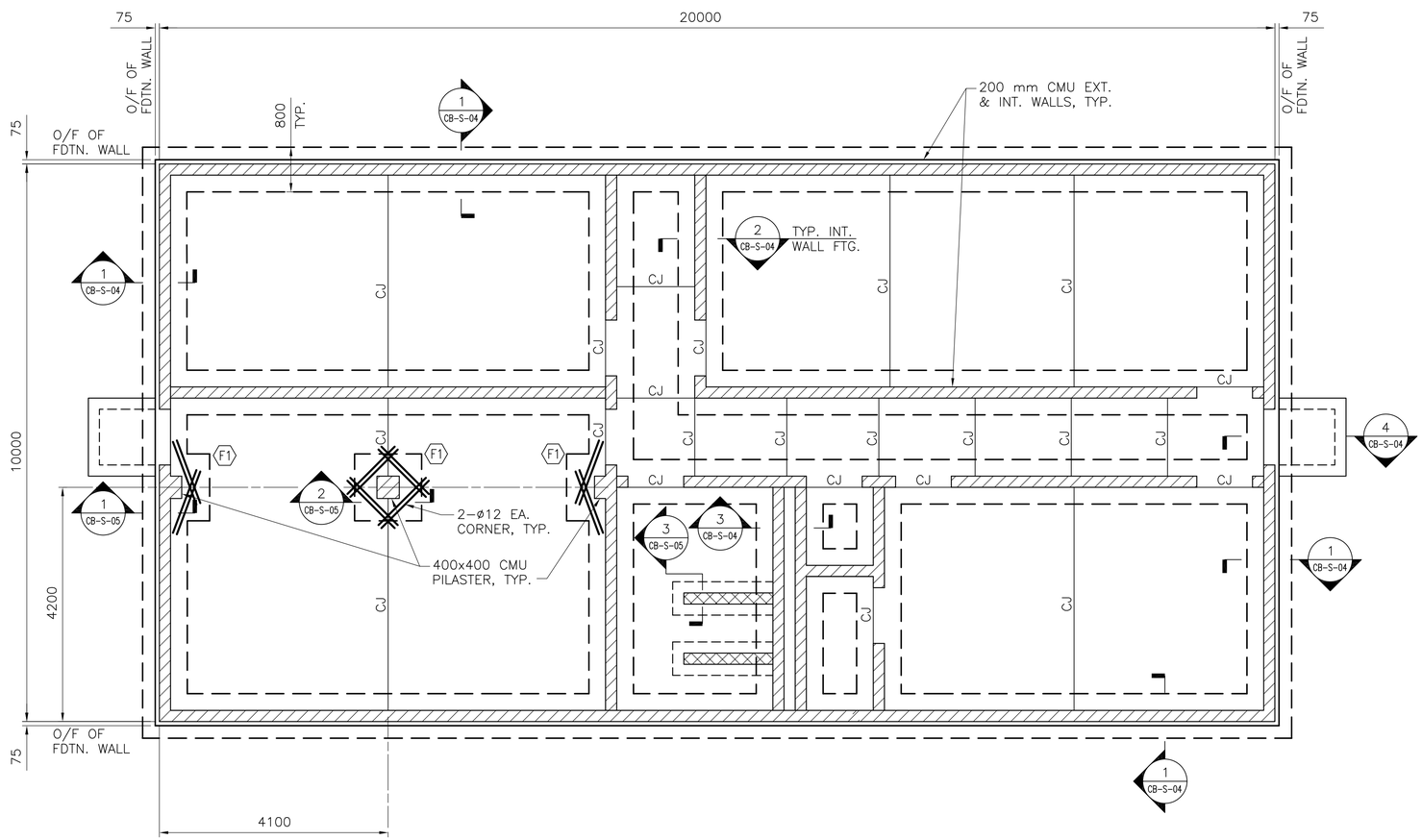

1 FOUNDATION PLAN

DC–S–01 REF. SCALE: 1:50

SHEET NOTES:

1. CONT. UPPER BOND BEAM 200x200 W/ 2–ø12 CONT BARS TOP & BOT.

2. CMU WALL REINFORCEMENT SHALL BE ø16 @ 600 U.N.O. EXTERIOR CMU WALLS SHALL BE FULLY GROUTED.

3. TOP OF CMU WALL ELEVATION SHALL BE 2.8M A.F.F.

4. REFER TO SHEET CB–SS–01 AND 02 FOR TYPICAL MASONRY DETAILS AND CONTROL JOINTS DETAILS.

5. REFER TO SHEET CB–SS–03 FOR TYPICAL SLAB JOINT DETAILS.

6. SLAB ON GRADE SHALL BE 150mm CONCRETE ON A 100mm CAPILLARY WATER BARRIER. SEE SHEET CB–SS–03 FOR TYPICAL SLAB REINFORCEMENT.

7. FOR WALL LOCATIONS, SEE ARCH. DRAWINGS.

LEGEND:

CMU WALL ON SPREAD FOOTING INTERGRAL WITH CEILING SLAB

CANTILEVERED CMU PARTITION WALL ON THICKENED SLAB; FOR TOW, SEE ARCH.

SPREAD FOOTING SCHEDULE

MARK	SIZE	REINFORCING
F1	1200 x 1200 x 300mm	TRANSVERSE – 5 ø16 (B) LONGITUDINAL – 5 ø16 (B)

1000 0 1000mm
SCALE: 1 = 50

UNLESS OTHERWISE NOTED, LINEAR DIMENSIONS SHOWN ARE IN MILLIMETERS.

SYMBOL	DESCRIPTION	DATE	APPR.

Designed By:
Drawn By:
Checked By:
Date: 10 MAY 2007
File No. AF0707
I.S.O. Sheet File Name: AF0707CB–SB01FPN.DWG
Solicitation Number: –

US Army Corps of Engineers
Transatlantic Programs Center

ANA REGIONAL BRIGADE
PAKTIKA, AFGHANISTAN
INTERPRETER FACILITIES
MWR

FOUNDATION PLAN

SHEET REFERENCE NUMBER:
CB–S–01

$DATE$
$FILE$

D SIZE BORDER
32 X 20.5

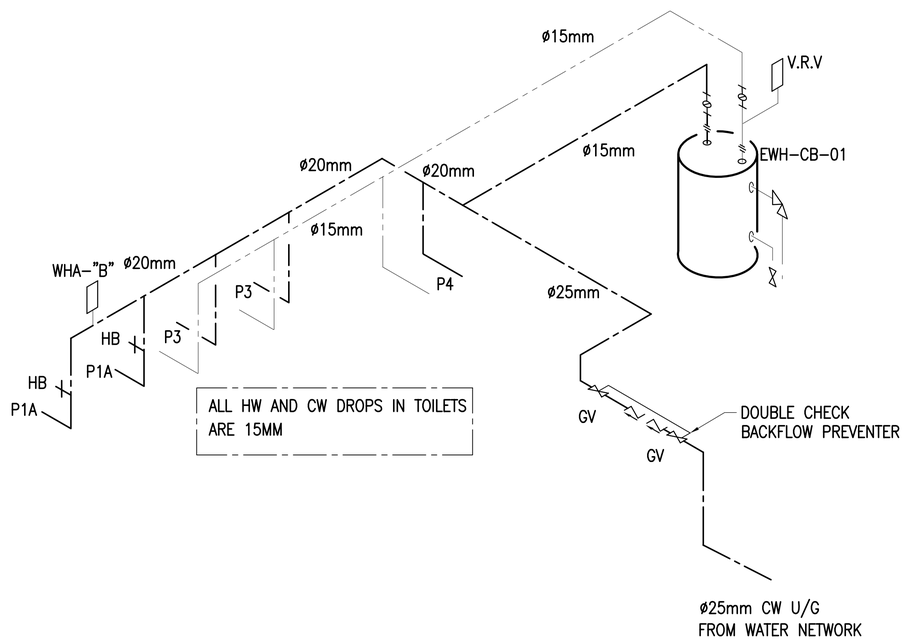

PLUMBING WATER RISER

SCALE: NONE

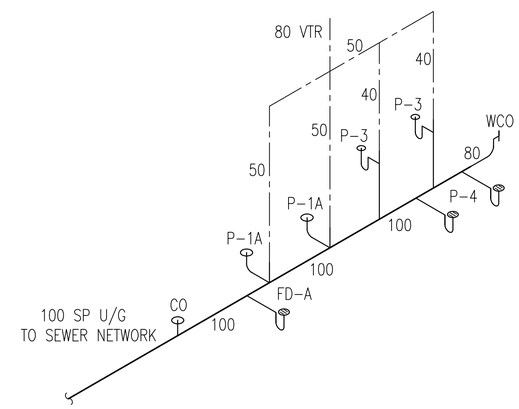

PLUMBING WASTE RISER

SCALE: NONE

UNLESS OTHERWISE NOTED, LINEAR DIMENSIONS SHOWN ARE IN MILLIMETERS.

SYMBOL	DESCRIPTION	DATE	APPR.

Designed By:
Drawn By:
Checked By:
Date: 10 MAY 2007
File No. AF0707
I.S.O. Sheet File Name: AF0707CB-MP02S.DWG
Solicitation Number: –

US Army Corps of Engineers
Transatlantic Programs Center

ANA REGIONAL BRIGADE
PAKTIKA, AFGHANISTAN
EMBEDDED TRAINING FACILITY
MWR
PLUMBING RISERS
– –

SHEET REFERENCE NUMBER:
CB-MP-02

$DATE$
$FILE$

D SIZE BORDER
32 X 20.5

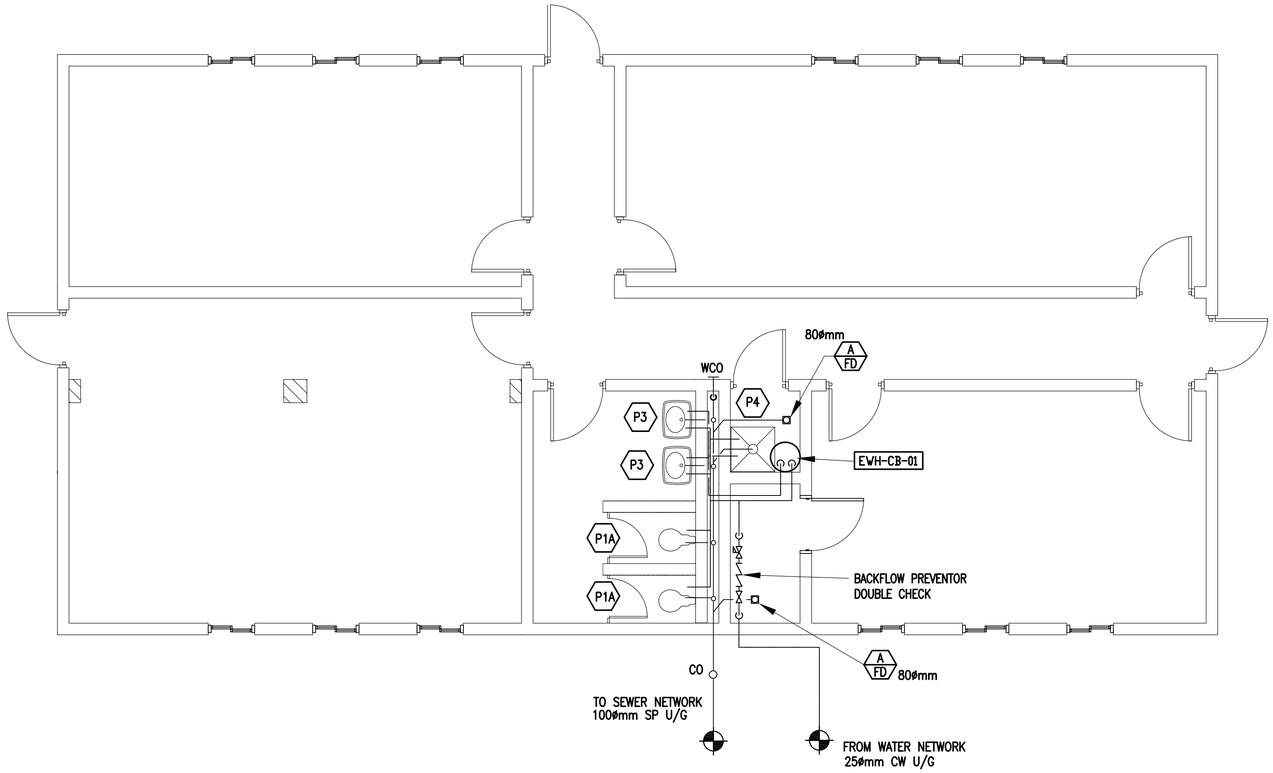

PLUMBING PLAN

SCALE: 1:50

PLUMBING FIXTURE SCHEDULE

FIX. No.	SYMBOL	FIXTURE NAME	PLUMBING FIXTURE SCHEDULE								REMARKS
			C.W.		H.W.		WASTE		VENT		
			MM	(INCHES)	MM	(INCHES)	MM	(INCHES)	MM	(INCHES)	
P1A		WESTERN WATER CLOSET (FLOOR OUTLET)	15	(1/2")	–	–	100	(4")	50	(2")	
P3		LAVATORY (WALL HUNG)	15	(1/2")	15	(1/2")	40	(1 1/2")	40	(1 1/2")	
P4		JANITOR SINK (FLOOR MOUNT JANITOR TYPE)	15	(1/2")	15	(1/2")	50	(2")	40	(1 1/2")	

ELECTRIC WATER HEATER SCHEDULE

EWH Name	Capacity (Gallon)	Electrical Data	TEMPERATURE RISE	REMARKS
EWH-CB-01	20 gal.	2KW/1PH/220V/50HZ	90F (32C)	

WATER HEATER IS MOUNTED ON WALL OVER JANITOR'S SINK.

UNLESS OTHERWISE NOTED, LINEAR DIMENSIONS SHOWN ARE IN MILLIMETERS.

SYMBOL	DESCRIPTION	DATE	APPR.

Designed By:
Drawn By:
Checked By:
Date: 10 MAY 2007
File No. AF0707
I.S.O. Sheet File Name: AF0707CB-MP01PNLDWG
Solicitation Number: –

US Army Corps of Engineers
Transatlantic Programs Center

ANA REGIONAL BRIGADE
PAKTIKA, AFGHANISTAN
EMBEDDED TRAINING FACILITY
MWR
PLUMBING PLAN
– –

SHEET REFERENCE NUMBER:
CB-MP-01

$DATE$
$FILE$

D SIZE BORDER
32 X 20.5

PLUMBING LEGEND

SYMBOL	DESCRIPTION
AV	ANGLE VALVE
BV	BALL VALVE
CV	CHECK VALVE
	COCK VALVE
DV	DRAIN VALVE
P7	EMERGENCY SHOWER AND EYE-WASH
FCO	FLOOR CLEANOUT
FD	FLOOR DRAIN
FS	FLOOR SIPHON
P13	FLOOR SINK (FS)
	GALITRAP (GT)
GV	GATE VALVE
HB	HOSE BIBB, PLAN
	INSPECTION MANHOLE
	PIPE TURNING DOWN
	PIPE TURNING UP
CO	PLUG CLEANOUT
	REDUCER-INCREASER
	SUPPORT LOCATION
	Y-TYPE STRAINER
U	UNION
VRV	VACUUM RELIEF VALVE
WHA	WATER HAMMER ARRESTOR

ABBREVIATION	DESCRIPTION
AC	AIR COMPRESSOR
℄	CENTER LINE
CA	COMPRESSED AIR
COYB	CLEANOUT IN YARD BOX
CW	COLD WATER PIPES
DT	DAY TANK
FOR	FUEL OIL RETURN
FOS	FUEL OIL SUPPLY
FT	FLASH TANK
H/L	HIGH LEVEL
HW	HOT WATER PIPES
IC	INSPECTION CHAMBER
I.L	INVERT LEVEL
LD	LEAK DETECTOR
L/L	LOW LEVEL
LSH	LEVEL SWITCH HIGH
LSHH	LEVEL SWITCH HIGH HIGH
LSL	LEVEL SWITCH LOW
LSLL	LEVEL SWITCH LOW LOW
LT	LEVEL TRANSMITTER
OW	OILY WASTE
OWS	OIL WATER SEPARATOR
P	PUMP
RP	RECIRCULATION PUMP
YCO	YARD CLEAN OUT
WOT	WASTE OIL STORAGE TANK
NT	NEUTRALIZATION TANK
GS	GREASE INTERCEPTOR

ABBREVIATION	DESCRIPTION
SP	SOIL PIPE
SR	SHORT RADIUS
U.G.	UNDER GROUND
VP	VENT PIPE
V.R.V	VACUUM RELIEF VALVE
WCO	WALL CLEANOUT
WHA	WATER HAMMER ARRESTOR
WO	WASTE OIL
WP	WASTE PIPE

LINE STYLE	DESCRIPTION
	COLD WATER (CW)
	HOT WATER (HW)
	VENT PIPE (VP)
	SOIL PIPE (SP)
	WASTE PIPE (WS)

EQUIPMENT IDENTIFICATION

EWH-XX-XX
- ELECTRIC WATER HEATER
- UNIT NUMBER
- BUILDING ABBREVIATION

NOTES:

1. INTERIOR SOIL AND WASTE PIPING 80 (3") AND SMALLER SHALL BE ROUTED WITH A 2% SLOPE. INTERIOR SOIL AND WASTE PIPING 100 (4") AND LARGER SHALL BE ROUTED WITH A MINIMUM 1% SLOPE.
2. EXTERIOR SOIL OR WASTE PIPING SHALL BE ROUTED WITH A 2% SLOPE WHEREVER POSSIBLE, OTHERWISE A MINIMUM SLOPE OF 1% SHALL BE USED.
3. WATER AND DRAINAGE PIPING SHALL BE EXTENDED 1.5 m OUTSIDE THE BUILDING UNLESS OTHERWISE INDICATED

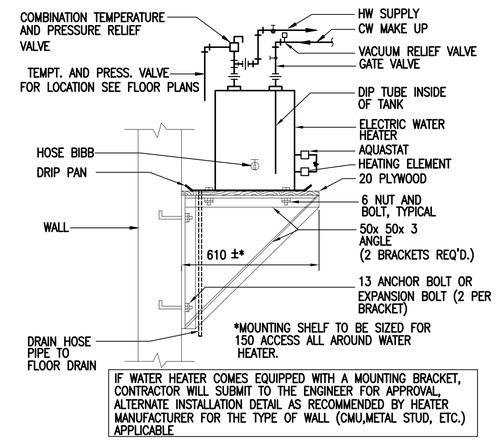

WALL MOUNTED ELECTRIC WATER HEATER DETAIL

SCALE: N.T.S

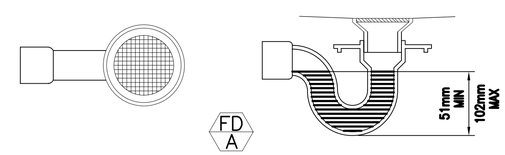

FLOOR DRAIN TYPE A

SCALE: N.T.S

UNLESS OTHERWISE NOTED, LINEAR DIMENSIONS SHOWN ARE IN MILLIMETERS.

SYMBOL	DESCRIPTION	DATE	APPR

Date: 10 MAY 2007
File No. AF0707
I.S.O. Sheet File Name: AF0707CB-MP01GN.dwg
Solicitation Number: _
Designed By:
Drawn By:
Checked By:

US Army Corps of Engineers Transatlantic Programs Center

ANA REGIONAL BRIGADE
PAKTIKA, AFGHANISTAN
EMBEDDED TRAINING FACILITY
MWR
PLUMBING LEGEND AND DETAILS
_

SHEET REFERENCE NUMBER:
CB-GP-01

$DATE$
$FILE$

D SIZE BORDER
32 X 20.5

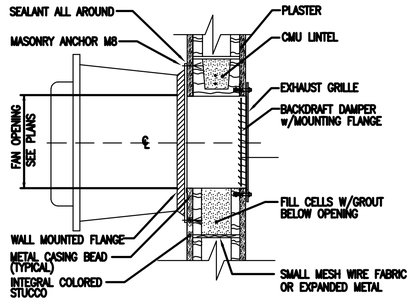

NOTES:–
* GASKET MATERIAL TO BE PROVIDED TO BOTTOM OF FAN INSIDE MOUNTING ANGLES.

1 WALL MOUNTED EXHAUST FAN INSTALLATION DETAIL

SCALE: N.T.S

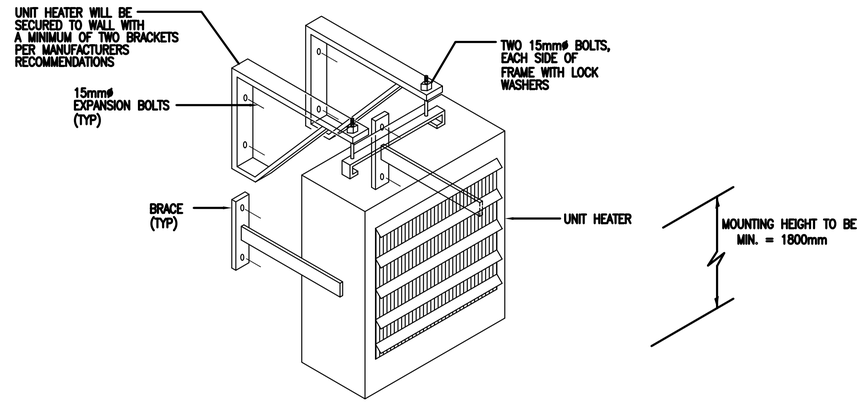

2 ELECTRIC WALL MOUNTED UNIT HEATER DETAIL

SCALE: N.T.S

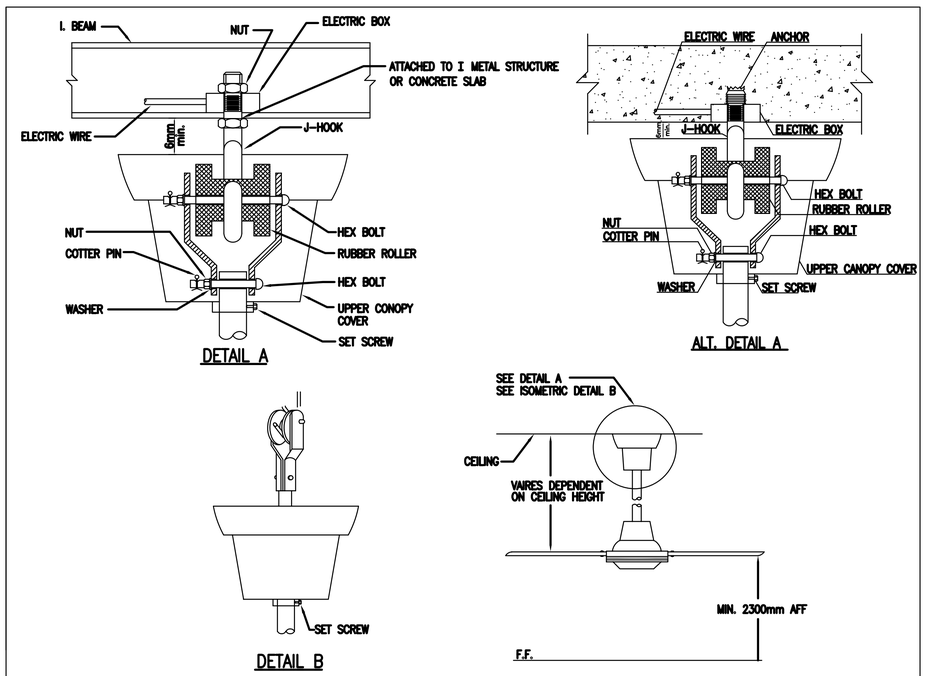

3 CEILING FAN MOUNTING DETAILS

SCALE: N.T.S

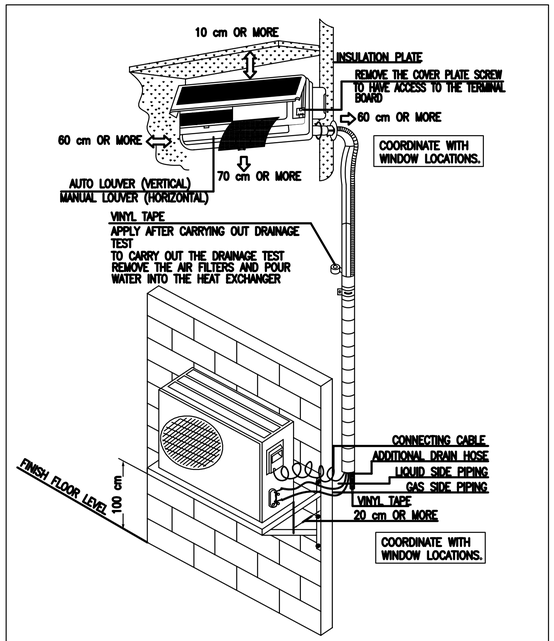

4 SPLIT UNIT INSTALLATION

SCALE: N.T.S

UNLESS OTHERWISE NOTED, LINEAR DIMENSIONS SHOWN ARE IN MILLIMETERS.

SYMBOL	DESCRIPTION	DATE	APPR.

Designed By:
Date: 10 MAY 2007
Drawn By:
File No. AF0707
Checked By:
I.S.O. Sheet File Name: AF0707CB-MH020N.dwg
Solicitation Number: –

US Army Corps of Engineers Transatlantic Programs Center

ANA REGIONAL BRIGADE
PAKTIKA, AFGHANISTAN
EMBEDDED TRAINING FACILITY
MWR
HVAC DETAILS
– –

SHEET REFERENCE NUMBER:
CB–DM–01

$DATE$
$FILE$

D SIZE BORDER
32 X 20.5

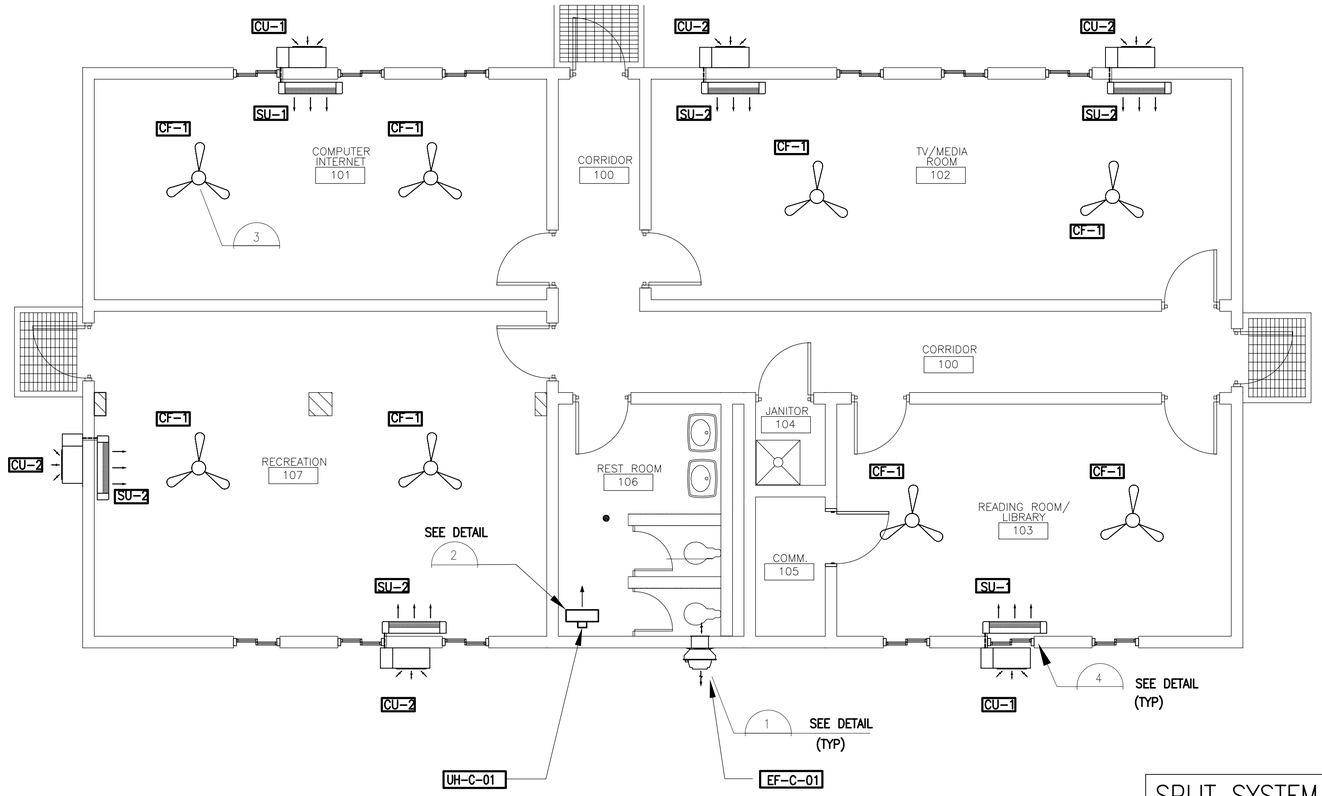

1 HVAC FLOOR PLAN

SCALE: 1:50

ELECTRIC UNIT HEATER

MARK		UH-C-1
CAPACITY (KW)		2
HEATING CAPACITY TOTAL (BTUH)		6828
CMH/THROW (M)		500/3
LOCATION		TOILET
ELECTRICAL DATA	VOLTS	220
	PHASE	1
	HERTZ	50
TOTAL NUMBER		1

REMARKS: CONTROLLED BY MANUFACTURER'S THERMOSTAT MOUNTED 1500 A.F.F. UNDER HEATER.

CONDENSING UNITS SCHEDULE (CU)

UNIT NUMBER	ELECTRICAL DATA			REMARKS
	VOLTS	PHASE	HERTZ	
CU-1	220	1	50	--
CU-2	220	1	50	--

SPLIT SYSTEM AIR CONDITIONING UNIT SCHEDULE (SU) HEAT PUMP

UNIT NUMBER	COOLING CAPACITY TOTAL	AIR QUANTITY		ELECTRICAL DATA			HEATING CAPACITY 47 DEG F	ELECTRICAL CHARACTERISTICS		
	(BTUH)	CMH	CFM	VOLTS	PHASE	HERTZ	(BTUH)	INDOOR UNIT MCA	OUTDOOR UNIT MCA	ELECTRIC HEAT KW*
SU-1	12.000	520	305	220	1	50	12,800	1.2	12	2
SU-2	9,700	440	260	220	1	50	9,700	1.0	12	2

*WITH SUPPLEMENTAL HEAT

EXHAUST FAN SCHEDULE (EF)

UNIT NUMBER	SERVICE	TYPE	AIR QUANTITY		MINIMUM WHEEL DIAMETER		FAN	STATIC PRESSURE		ELECTRICAL DATA				TEMP CONTROL DIAGRAM	INTERLOCK WITH	DRIVE TYPE	REMARKS
			CMH	CFM	MM	INCHES	RPM	mmH2O	IN W.G.	H.P.	VOLTS	PHASE	HERTZ				
EF-C-01	VENT	W-CTFG-GP	150	100	NA	NA	1050	2.54	0.1	1/25	220	1	50	NONE	SWITCH	DIRECT	NOTES 1, 2

MANUFACTURER SHALL PROVIDE NECESSARY TRANSFORMERS ON ALL UNITS TO MEET ELECTRICAL REQUIREMENT.

NOTE 1. SUPPLIED WITH BACKDRAFT DAMPER

NOTE 2. ALL EXHAUST FANS WITH SINGLE PHASE POWER ARE TO BE PROVIDED w/ A FACTORY MOUNTED DISCONNECT SWITCH.

FAN SCHEDULE TYPE – LEGEND
(REF. EXHAUST AND SUPPLY FAN SCHEDULES)
R-CTFG-GP

R =ROOF
W =WALL
IL =INLINE
CL =CEILING

GP = GENERAL PURPOSE
EP = EXPLOSION PROOF
DB = DOWN BLAST
UB = UP BLAST
UT = UTILITY SET

CTFG = CENTRIFUGAL
PROP = PROPELLER
TUBA = TUBE AXIAL

CEILING FAN SCHEDULE (CF)

UNIT NUMBER	TYPE (NOTE 1)	FAN DIAMETER	MAX WATTS	ELECTRICAL DATA			REMARKS
				VOLTS	PHASE	HERTZ	
CF-1	WITH LIGHT	48 in	100	220	1	50	3-SPEED

NOTES:– 1– WITH LIGHT FIXTURE – (2) 13 WATT FLOURESCENT BULBS
2– BOTTOM OF FAN MOUNTING HEIGHT = MINIMUM 2500mm A.F.F
3– PROVIDE WITH REMOTE WALL MOUNTED, SWITCH LOCATED ADJACENT TO THERMOSTAT. SWITCH TO CONTROL FAN AND LIGHTS SEPERATELY.

UNLESS OTHERWISE NOTED, LINEAR DIMENSIONS SHOWN ARE IN MILLIMETERS.

SYMBOL	DESCRIPTION	DATE	APPR.

Designed By:
Drawn By:
Checked By:
Date: 10 MAY 2007
File No. AF0707
I.S.O. Sheet File Name: AF0707CB-MH01PNL.DWG
Solicitation Number: –

US Army Corps of Engineers
Transatlantic Programs Center

ANA REGIONAL BRIGADE
PAKTIKA, AFGHANISTAN
EMBEDDED TRAINING FACILITY
MWR
HVAC PLAN
– –

SHEET REFERENCE NUMBER:
CB-MH-01

$DATE$
$FILE$

D SIZE BORDER
32 X 20.5

ABBREVIATIONS

ABV. CLG	:–	ABOVE CEILING
AFF	:–	ABOVE FINISH FLOOR
AHU	:–	AIR HANDLING UNIT
AMPS	:–	AMPERES
B.D	:–	BACKDRAFT DAMPER
B.H	:–	BASE BOARD HEATER
B.M.O	:–	BELL MOUTH OPENING
BOP	:–	BOTTOM OF PIPE
BTU/H	:–	BRITISH THERMAL UNITS PER HOUR
CD	:–	CONDENSATE DRAIN
CF	:–	CEILING FAN
C.F.M	:–	CUBIC FEET PER MINUTE
C.M.H	:–	CUBIC METER PER HOUR
CONN	:–	CONNECTION
CORR	:–	CORRUGATED
CU	:–	CONDENSING UNIT
DB	:–	DRY BULB
DH	:–	DIESEL UNIT HEATER
DIA	:–	DIAMETER
D.L	:–	DOOR LOUVER
DT	:–	DAY TANK
DWG	:–	DRAWING
EF	:–	EXHAUST FAN
EL	:–	EXHAUST LOUVER
ENT	:–	ENTERING
EXH.G	:–	EXHAUST GRILLE
EXT	:–	EXTERNAL
F.A.D	:–	FRESH AIR DUCT
FD	:–	FIRE DAMPER
FLA	:–	FULL LOAD AMPERES
FOR	:–	FUEL OIL RETURN
FO	:–	FUEL OIL
FOS	:–	FUEL OIL SUPPLY
FPM	:–	FEET PER MINUTE
FT	:–	FEET
GALV	:–	GALVANIZED
HP	:–	HORSE POWER
KW	:–	KILO WATTS
LD	:–	LEAK DETECTOR
L/S	:–	LITERS PER SECOND
LT	:–	LEVEL TRANSMITTER

ABBREVIATIONS

LVG	:–	LEAVING
MRAD	:–	MOTORIZED RETURN (RECIRCULATION)
MAID	:–	MOTORIZED AIR INTAKE DAMPER
MEAD	:–	MOTORIZED EXHAUST AIR DAMPER
M.D	:–	MOTORIZED DAMPER
mm	:–	MILLIMETERS
MPS	:–	METERS PER SECOND
NC	:–	NORMALLY CLOSED
NO	:–	NORMALLY OPEN
OC	:–	ON CENTERS
OSA	:–	OUTSIDE AIR
P	:–	PUMP
PACU	:–	PACKAGE AIR CONDITIONING UNIT
P.S	:–	POWER SUPPLY
R.C.D	:–	RETURN CEILING DIFFUSER
R.D	:–	RETURN AIR DUCT
RED	:–	REDUCTION/REDUCER
R.G	:–	RETURN GRILLE
RPM	:–	REVOLUTIONS PER MINUTE
RS	:–	REFRIGERANT SUCTION
RL	:–	REFRIGERANT LIQUID
S.C.D	:–	SUPPLY CEILING DIFFUSER
S.D	:–	SUPPLY DUCT
SF	:–	SUPPLY FAN
S.G	:–	SUPPLY GRILLE
SM.D	:–	SMOKE DETECTOR
SP	:–	STATIC PRESSURE
SQ	:–	SQUARE
SR	:–	SHORT RADIUS
S.R–X	:–	SUPPLY REGISTER TYPE–X
SS	:–	STAINLESS STEEL
SU	:–	SPLIT UNIT
T	:–	SPACE THERMOSTAT
T.G	:–	TRANSFER GRILLE
TOS	:–	TOP OF SUPPORT
TYP	:–	TYPICAL
U.C	:–	UNDER CUT
UH	:–	UNIT HEATER
V.D	:–	VOLUME DAMPER
WB	:–	WET BULB
WG	:–	WATER GAGE

NOTES:

1– ALL DIMENSIONS ARE IN MM UNLESS OTHERWISE NOTED.

2– DUCT DIMENSION INDICATES INSIDE DIMENSIONS.

3– EXACT LOCATIONS OF POWER SUPPLY POINTS, CONTROL PANEL AND MOTOR SWITCH TO BE TAKEN FROM ELECTRICAL DESIGN DRAWINGS.

4– THERMOSTAT HEIGHT IS 1525mm ABOVE F.F.L.

5– ALL EXTERIOR SUPPLY DUCTS WILL BE INSULATED WITH 50 mm THICK. MINERAL FIBER AND SHALL BE COVERED WITH METAL CLADDING.

6– ALL MENTIONED HEIGHTS ARE MEASURED FROM F.F.L.

7– INSULATE ALL THE SUPPLY DUCT WITH 50mm(2") INSULATION THICKNESS, 16kg/m³ FIBERGLASS.

SYMBOLS

:– SWITCH

:– THERMOSTAT

:– TEMPERATURE SENSOR

:– MOTORIZED DAMPER

:– CARBON MONOXIDE SENSOR

:– CEILING FAN

:– THRU WALL EXHAUST FAN

:– BASE BOARD HEATER

:– UNIT HEATER

:– DIESEL UNIT HEATER

:– OUTSIDE INTAKE LOUVER

:– GRAVITY RIDGE VENT

:– EXHAUST ROOF FAN

:– SUPPLY ROOF FAN

:– SPLIT UNIT

:– CONDENSING UNIT

F.F.L xx :– FINISH FLOOR LEVEL IN (m) MEASURED FROM REFRENCE +0.00 LEVEL

:– SUPPLY SECTION FAN

:– FIRE DAMPER

:– VOLUME DAMPER

:– DOOR LOUVER

:– UNDER CUT

EQUIPMENT IDENTIFICATION

XX–XX–XX

- UNIT NUMBER
- BUILDING ABBREVIATION
- EQUIPMENT TYPE

DUCTWORK

SUPPLY AIR DIFFUSER – ARROWS INDICATE PATTERN. NO PATTERN SHOWN EQUALS 4–WAY.

RETURN AIR GRILLE

EXHAUST GRILLE

SUPPLY AIR SLOT

RETURN AIR SLOT

ROUND DUCTWORK. DIAMETER INDICATED IN MILLIMETER

RECTANGULAR DUCTWORK. SIZE INDICATED IN INCHES, FIRST NUMBER IS SIDE SHOWN.

FLEXIBLE DUCT

SUPPLY OR OUTSIDE AIR DUCT

RETURN AIR DUCT.

RELIEF OR EXHAUST AIR DUCT.

90 DEGREE DUCTWORK ELBOW.

RADIUS DUCTWORK ELBOW – ROUND OR RECTANGULAR.

RECTANGULAR DUCTWORK BRANCH TAKE–OFF WITH 45 DEGREE BRANCH INLET.

FLARED SPIN–IN WITH DAMPER AND FLEX DUCT (DIFFUSER CONNECTION).

ROUND DUCT BRANCH TAKE–OFF FROM RECTANGULAR MAIN WITH CONICAL TAP.

DUCTWORK SIZE TRANSITION.

DUCT PRESSURE CLASS. POINT OF CHANGE IN DUCT CONSTRUCTION.

FLEXIBLE DUCT CONNECTION

SUPPLY OR OUTSIDE AIR DUCT UP

SUPPLY OR OUTSIDE AIR DUCT DOWN

RETURN AIR DUCT UP

RETURN AIR DUCT DOWN

RELIEF OR EXHAUST AIR DUCT UP

RELIEF OR EXHAUST AIR DUCT DOWN

IN–LINE 90 DEGREE DROP (RISE) IN DUCT

UP INCLINED RISE IN DUCT

DN INCLINED DROP IN DUCT

TURNING VANES

DUCT EXTRACTOR

SPLITTER DAMPER

AD ACCESS DOOR

UNLESS OTHERWISE NOTED, LINEAR DIMENSIONS SHOWN ARE IN MILLIMETERS.

SYMBOL	DESCRIPTION	DATE	APR.

Designed By:
Date: 10 MAY 2007
Drawn By:
File No. AF0707
Checked By:
I.S.O. Sheet File Name: AF0707CB–MH01GN.dwg
Solicitation Number: –

US Army Corps of Engineers Transatlantic Programs Center

ANA REGIONAL BRIGADE
PAKTIKA, AFGHANISTAN
EMBEDDED TRAINING FACILITY
MWR
HVAC LEGEND
– –

SHEET REFERENCE NUMBER:
CB–GM–01

$DATE$
$FILE$

D SIZE BORDER
32 X 20.5

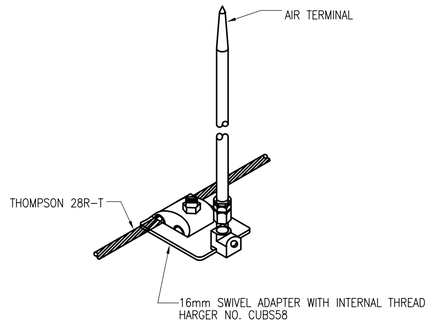

1 AIR TERMINAL MOUNTING DETAIL

SCALE: N.T.S

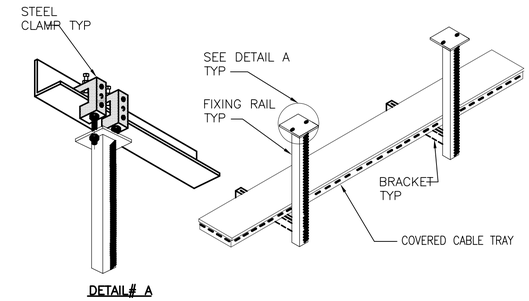

2 CABLE TRAY SUPPORT DETAIL

SCALE: N.T.S

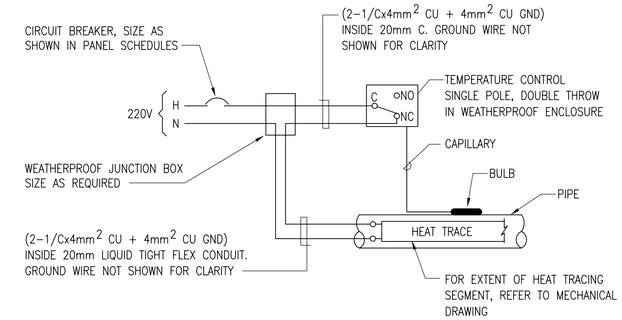

3 HEAT TRACE CONTROL DIAGRAM

SCALE: N.T.S

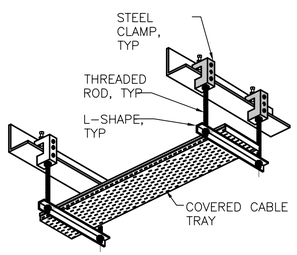

4 CABLE TRAY SUPPORT DETAIL

SCALE: N.T.S

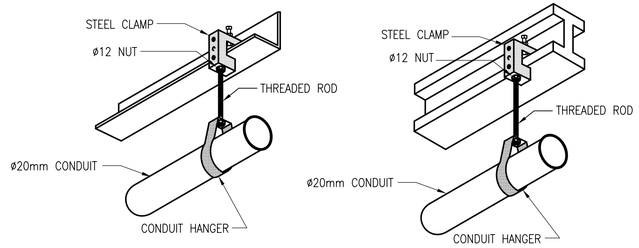

5 SUPPORT OF CONDUIT FROM STEEL STRUCTURE

SCALE: N.T.S

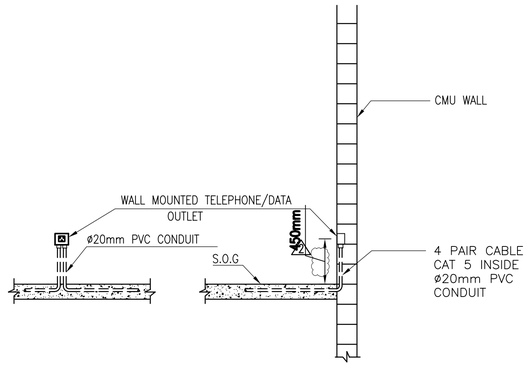

6 GENERAL INSTALLATION DETAIL FOR RECESSED TELEPHONE/ DATA OUTLET (CONDUIT EMBEDDED IN SLAB)

SCALE: N.T.S

UNLESS OTHERWISE NOTED, LINEAR DIMENSIONS SHOWN ARE IN MILLIMETERS.

SYMBOL	DESCRIPTION	DATE	APP

Designed By:
Date: 10 MAY 2007
Drawn By:
File No. AF0707
Checked By:
I.S.O. Sheet File Name: AF0707CB-EL030T.dwg
Solicitation Number: –

US Army Corps of Engineers Transatlantic Programs Center

ANA REGIONAL BRIGADE
PAKTIKA, AFGHANISTAN
EMBEDDED TRAINING FACILITY
MWR
ELECTRICAL DETAILS

SHEET REFERENCE NUMBER:
CB-DE-03

$DATE$
$FILE$

LIGHTING FIXTURE SCHEDULE

TYPE	DESCRIPTION	NO. OF LAMPS	LAMP TYPE	WATTS PER LAMP	VOLTAGE	MOUNTING
A	PENDANT MOUNTED INDUSTRIAL FLUORESCENT LIGHT FIXTURE WITH WIDE DISTRIBUTION REFLECTOR KIT	2	T8	36	220/50HZ	PENDANT
A1	SURFACE MOUNTED INDUSTRIAL FLUORESCENT LIGHT FIXTURE WITH WIDE DISTRIBUTION REFLECTOR KIT	2	T8	36	220/50HZ	SURFACE
B	SURFACE/PENDANT MOUNTED PRISTMIC REFLECTOR	2	T8	36	220/50HZ	SURFACE/PENDENT
B1	SURFACE MOUNTED VIRTUALLY UNBREAKABLE DIFFUSER, SOLID STEEL BODY AND FRAME, HIGH SECURITY STAINLESS BOLTS	2	T8	36	220/50HZ	SURFACE/PENDENT
C	PENDANT MOUNTED FLUORESCENT LIGHT FIXTURE WITH REFLECTOR AND ACRYLIC LENS	4	T8	36	220/50HZ	PENDANT
C1	SURFACE MOUNTED FLUORESCENT LIGHT FIXTURE WITH REFLECTOR AND ACRYLIC LENS	4	T8	36	220/50HZ	SURFACE
D	SURFACE/PENDANT MOUNTED FIXTURE SPECIAL FOR WET LOCATION	2	T8	40	220/50HZ	SURFACE
E	SURFACE/WALL MOUNTED FIXTURE SPECIAL FOR WET LOCATION	2	T8	36	220/50HZ	SURFACE OR WALL
F	WALL MOUNTED COMPACT FLUOR.	1	CF	26	220/50HZ	WALL
G	PENDANT MOUNTED INDUSTRIAL LOW BAY FIXTURE	1	HPS	150	220/50HZ	PENDANT
G1	PENDANT MOUNTED INDUSTRIAL HIGH BAY FIXTURE	1	HPS	150	220/50HZ	PENDANT
G2	PENDANT MOUNTED INDUSTRIAL LOW BAY FIXTURE	1	HPS	250	220/50HZ	PENDANT
J	EXPLOSION PROOF SURFACE MOUNTED FLUOR. FIXTURE	2	INCLUDED	36	220/50HZ	SURFACE
X1	EXIT SIGN WITH DIRECTIONAL ARROWS AS REQUIRED	2	INCLUDED	8	220/50HZ	UNIVERSAL
X2	EMERGENCY FIXTURE WITH HALOGEN LAMPS	2	HALOGEN	20	220/50HZ	WALL/SURFACE
X3	EXPLOSION PROOF EMERGENCY FIXTURE WITH HALOGEN LAMPS	2	HALOGEN	14	220/50HZ	WALL/SURFACE

BRANCH CIRCUITS WIRE SCHEDULE

220 VOLT 1ø, 3W. CIRCUITS

CIRCUIT BREAKER	CONDUCTOR
20A–1P	2 #4mm² & 1 #4mm² GND. – 20mm C.
30A–1P	2 #6mm² & 1 #6mm² GND. – 20mm C.
40A–1P	2 #10mm² & 1 #6mm² GND. – 20mm C.
50A–1P	2 #16mm² & 1 #6mm² GND. – 25mm C.
60A–1P	2 #25mm² & 1 #10mm² GND. – 25mm C.
80A–1P	2 #35mm² & 1 #10mm² GND. – 25mm C.
100A–1P	2 #50mm² & 1 #10mm² GND. – 32mm C.

380 VOLT, 3ø, 4W. CIRCUITS

20A–3P	3 #4mm² & 1 #4mm² GND. – 20mm C.
30A–3P	3 #6mm² & 1 #6mm² GND. – 20mm C.
40A–3P	3 #10mm² & 1 #6mm² GND. – 20mm C.
50A–3P	3 #16mm² & 1 #6mm² GND. – 38mm C.
60A–3P	3 #25mm² & 1 #10mm² GND. – 38mm C.
80A–3P	3 #35mm² & 1 #10mm² GND.–38mmC.
100A–3P	3 #50mm² & 1 #10mm² GND.–40mmC.

380 VOLT, 3ø,5W. CIRCUITS

20A–3P	4 #4mm² & 1 #4mm² GND. – 20mm C.
30A–3P	4 #6mm² & 1 #6mm² GND. – 20mm C.
40A–3P	4 #10mm² & 1 #6mm² GND. – 32mm C.
50A–3P	4 #16mm² & 1 #6mm² GND. – 38mm C.
60A–3P	4 #25mm² & 1 #10mm² GND. – 38mm C.

NOTE:

1. TYPE MC CABLE SHALL INCLUDE FULL SIZE INSULATED GROUND CONDUCTOR. SIZES AS INDICATED IN SCHEDULE.

UNLESS OTHERWISE NOTED, LINEAR DIMENSIONS SHOWN ARE IN MILLIMETERS.

SYMBOL	DESCRIPTION	DATE	APR

Designed By:
Drawn By:
Checked By:
Date: 10 MAY 2007
File No. AF0707
I.S.O. Sheet File Name: AF0707CB–EL020N.dwg
Solicitation Number: –

US Army Corps of Engineers Transatlantic Programs Center

ANA REGIONAL BRIGADE
PAKTIKA, AFGHANISTAN
EMBEDDED TRAINING FACILITY
MWR
ELECTRICAL
FIXTURE SCHEDULE
AND BRANCH CIRCUIT

SHEET REFERENCE NUMBER:
CB–GE–02

$DATE$
$FILE$

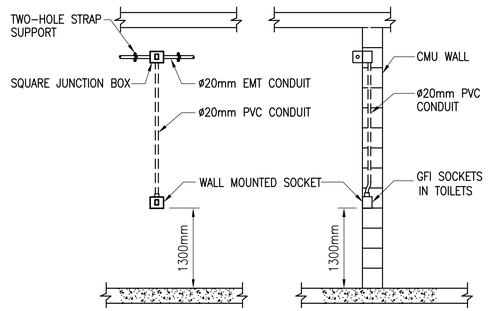

1 GENERAL INSTALLATION DETAIL FOR RECESSED SURFACE MOUNTED SOCKET IN TOILETS

SCALE: N.T.S

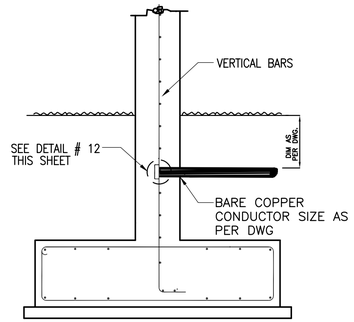

2 TYPICAL STRUCTURAL BONDING DETAIL

SCALE: N.T.S

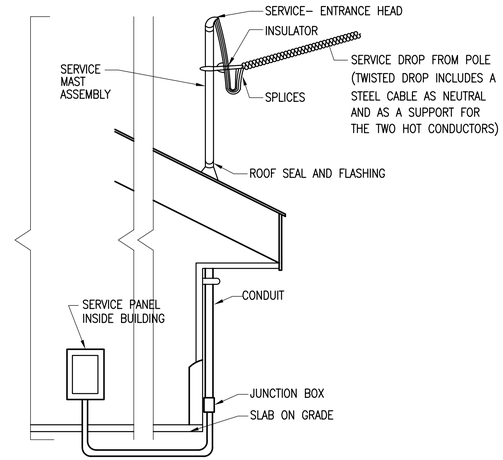

3 PANEL BOARD FEEDING FROM BOTTOM (FOR PANELS NOT IN EXTERIOR WALL)

SCALE: N.T.S.

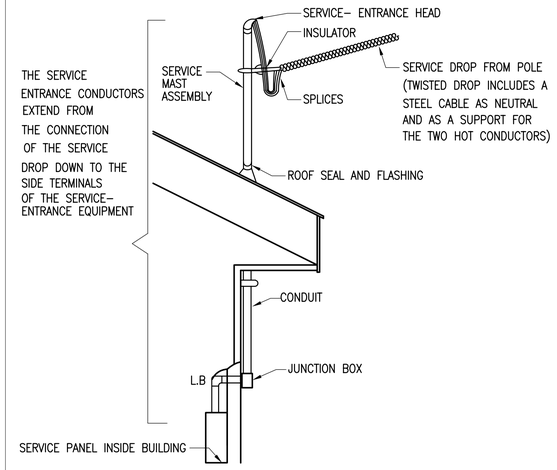

4 PANEL BOARD FEEDING FROM TOP (FOR PANELS ON EXTERLOR WALL)

SCALE: N.T.S.

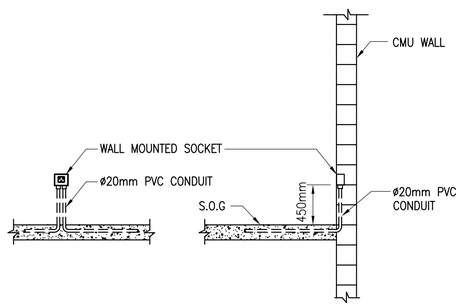

5 GENERAL INSTALLATION DETAIL FOR RECESSED SOCKET (CONDUIT EMBEDDED IN SLAB)

SCALE: N.T.S

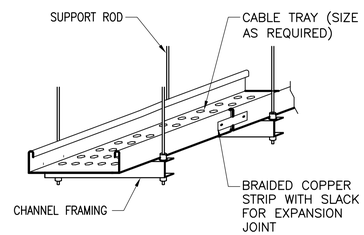

6 CABLE TRAY CROSSING EXPANSION JOINT

SCALE: N.T.S

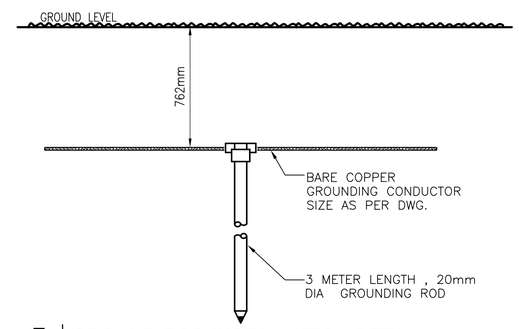

7 GROUND ROD INSTALLATION DETAIL

SCALE: N.T.S

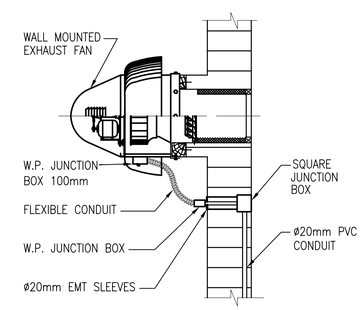

8 GENERAL INSTALLATION DETAIL FOR EXHAUST FAN (CONDUIT EMBEDDED)

SCALE: N.T.S

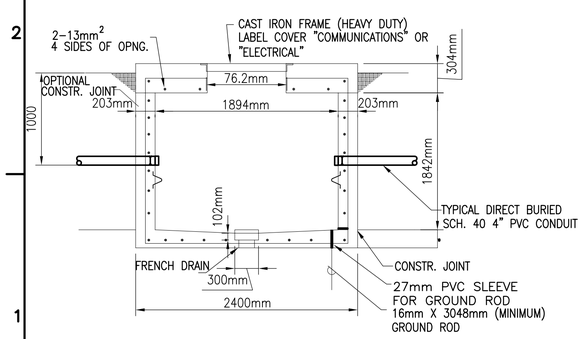

9 MANHOLE DETAIL (2400x2400mm)

SCALE: N.T.S.

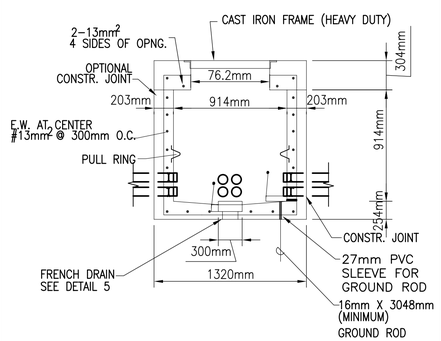

10 HAND HOLE DETAIL (1320x1320mm)

SCALE: N.T.S.

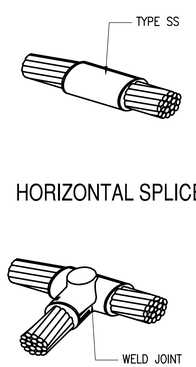

11 T-CONNECTION WELDING POINT

SCALE: N.T.S.

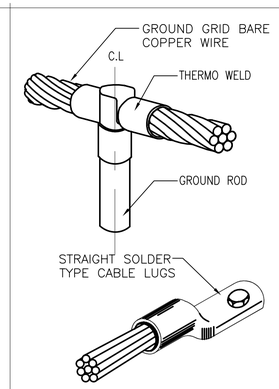

12 GROUNDING CABLE LUGS

SCALE: N.T.S.

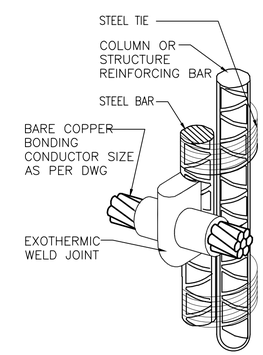

13 WELDING TO STEEL REINFORCING BAR

SCALE: N.T.S.

UNLESS OTHERWISE NOTED, LINEAR DIMENSIONS SHOWN ARE IN MILLIMETERS.

SYMBOL	DESCRIPTION	DATE	APR

Designed By:
Drawn By:
Checked By:
Date: 10 MAY 2007
File No. AF0707
I.S.O. Sheet File Name: AF0707CB-EL02D1.dwg
Solicitation Number: -

US Army Corps of Engineers Transatlantic Programs Center

ANA REGIONAL BRIGADE
PAKTIKA, AFGHANISTAN
EMBEDDED TRAINING FACILITY
MWR
ELECTRICAL DETAILS

SHEET REFERENCE NUMBER:
CB-DE-02

$DATE$
$FILE$

PANEL "PP" SCHEDULE

100 AMPS MAIN CIRCUIT BREAKER 380DELTA/220 VOLTS 3 PHASE 5 WIRE 10,000 AIC

MOUNTING: SURFACE

NO	DESCRIPTION	BKR/P	VA A		VA B		VA C		BKR/P	DESCRIPTION	NO
1	LIGHTS-100, 104-106, & EMERGENCY	20/1	552	1100					20/1	FIRE DETECTION - 100-103,107	2
3	LIGHTS/FANS - 101,107	20/1			400	400			20/1	LIGHTS/FANS - 102,103	4
5	RECEPS - 107 & EXTERIOR	20/1					1980	1320	20/1	RECEPS - 101 & EXTERIOR	6
7	RECEPS - 101	20/1	990	1650					20/1	RECEPS - 102 & EXTERIOR	8
9	RECEPS - 100, 102	20/1			990	6000			40/1	WATER HEATER - 104	10
11	RECEP - 106	20/1					330	220	20/1	EXHAUST FAN - 106	12
13	RECEPS - 103 & EXTERIOR	20/1	1650	500					20/1	RECEP - 105	14
15	RECEP - 100, 107	20/1			990	2900			20/1	SPLIT SYSTEM AC UNIT - 107	16
17	SPLIT SYSTEM AC UNIT - 101	20/1					2900	2900	20/1	SPLIT SYSTEM AC UNIT - 102	18
19	SPLIT SYSTEM AC UNIT - 103	20/1	2900	2900					20/1	SPLIT SYSTEM AC UNIT - 107	20
21	SPARE	20/1				2000			20/1	UNIT HEATER - 106	22
23	SPARE	20/1							20/1	SPARE	24
25	SPACE	20/1							20/1	SPACE	26
27	SPACE	20/1							20/1	SPACE	28
29	SPACE	20/1							20/1	SPACE	30
		TOTAL	12242		13680		9650				
CONNECTED KVA:		35.572 KVA									
CONNECTED AMPS		54.046 AMPS									

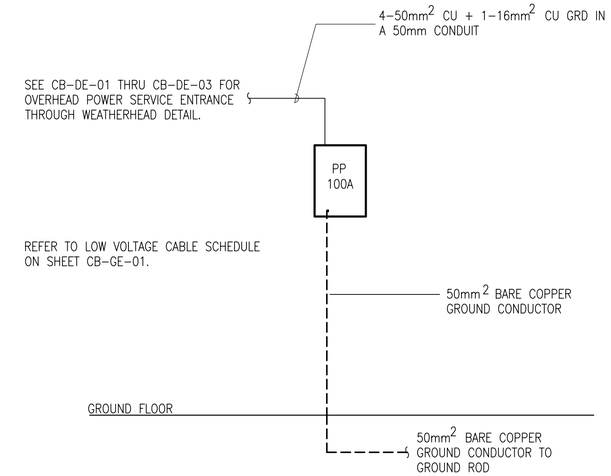

1 POWER RISER DIAGRAM

CB-SE-01 SCALE: N.T.S.

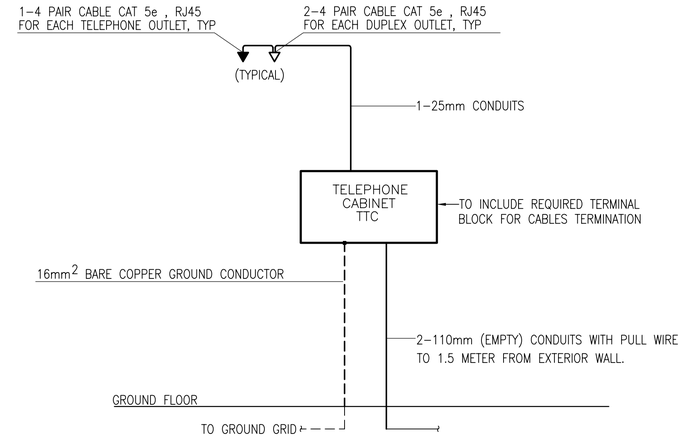

2 TELEPHONE RISER DIAGRAM

CB-SE-01 SCALE: N.T.S.

UNLESS OTHERWISE NOTED, LINEAR DIMENSIONS SHOWN ARE IN MILLIMETERS.

SYMBOL	DESCRIPTION	DATE	APP

Designed By:
Drawn By:
Checked By:
Date: 10 MAY 2007
File No. AF0707
I.S.O. Sheet File Name: AF0707CB-EL01SC.dwg
Solicitation Number: –

US Army Corps of Engineers Transatlantic Programs Center

ANA REGIONAL BRIGADE
PAKTIKA, AFGHANISTAN
EMBEDDED TRAINING FACILITY
MWR
ELECTRICAL
PANEL SCHEDULE & RISERS

SHEET REFERENCE NUMBER:
CB-SE-01

$DATE$
$FILE$

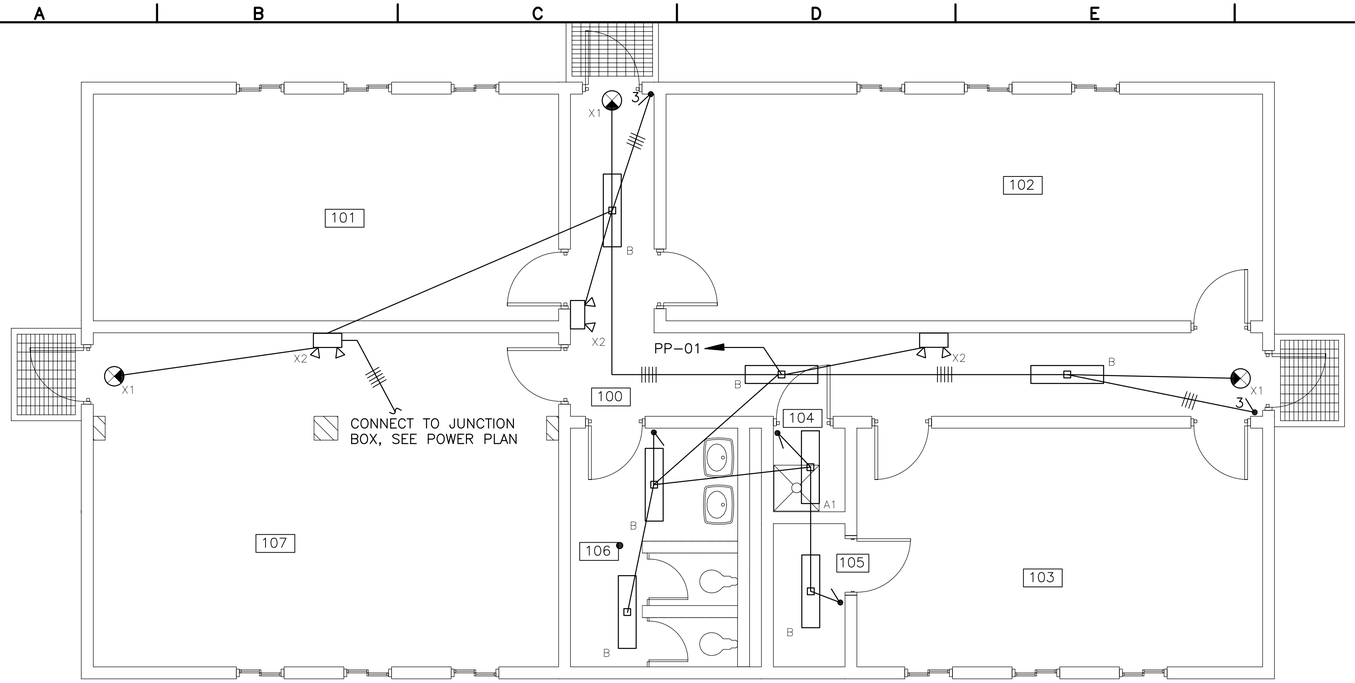

1 ELECTRICAL LIGHTING PLAN

CB-E-01 SCALE: 1:50

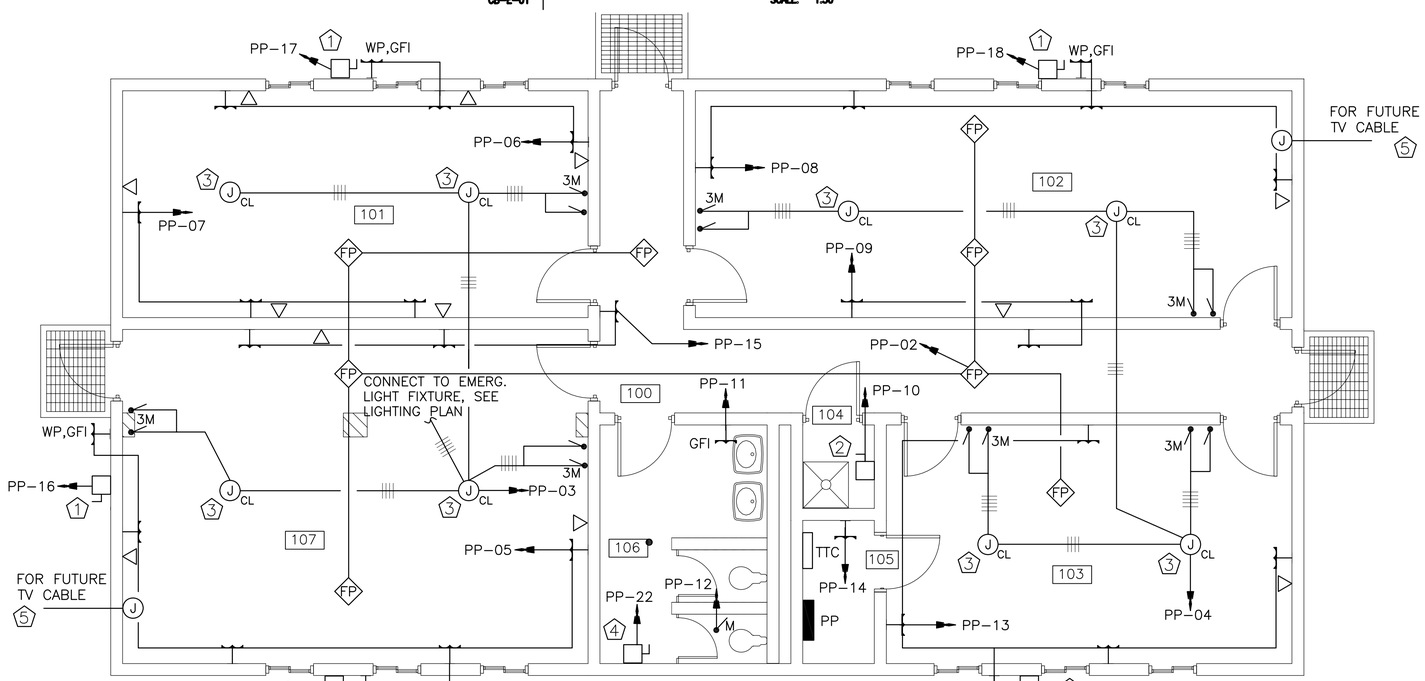

2 ELECTRICAL POWER PLAN

CB-E-01 SCALE: 1:50

NOTES:

SEE CB-GE-02 FOR BRANCH CIRCUITS WIRING SCHEDULE WITH CONDUIT SIZES.

1. PROVIDE 1P, 20A, 220V NONFUSED DISCONNECT IN NEMA TYPE 4X ENCLOSURE.
2. PROVIDE 1P, 40A, 220V NONFUSED DISCONNECT IN NEMA TYPE 1 ENCLOSURE.
3. J-BOX FOR CEILING FAN/LIGHT FIXTURE. SEE MECHANICAL SCHEDULES AND DETAILS.
4. PROVIDE 1P, 60A, 220V NONFUSED DISCONNECT IN NEMA TYPE 1 ENCLOSURE.
5. EXTEND 13MM CONDUIT 1.5M OUTSIDE OF BLDG., 305MM BELOW GRADE.

1000 0 1000mm
SCALE: 1 = 50

UNLESS OTHERWISE NOTED, LINEAR DIMENSIONS SHOWN ARE IN MILLIMETERS.

SYMBOL	DESCRIPTION	DATE	APP

Designed By:
Drawn By:
Checked By:
Date: 10 MAY 2007
File No. AF0707
I.S.D. Sheet File Name: AF0707CB-EL01PN.dwg
Solicitation Number: –

US Army Corps of Engineers Transatlantic Programs Center

ANA REGIONAL BRIGADE
PAKTIKA, AFGHANISTAN
EMBEDDED TRAINING FACILITY
MWR
ELECTRICAL
LIGHTING & POWER PLAN

SHEET REFERENCE NUMBER:
CB-E-01

$DATE$
$FILE$

LIGHTING LEGEND:

	ONE LAMP FLUORESCENT L.F.
	TWO LAMPS FLUORESCENT L.F.
	FOUR LAMPS FLUORESCENT L.F.
	FLOOD LIGHT, WALL MOUNTED
	6 METER, LIGHTING POLE WITH FLOOD LIGHT
	MIRROR WALL MOUNTED LIGHT FIXTURE
	WALL MOUNTED FIXTURE
	PENDANT MOUNTED INDUSTRIAL, LOW/HIGH BAY L.F.
X1	SURFACE (WALL/CELING)ONE FACE EXIT SIGN WITH BACK UP BATTERY.
X2	WALL MOUNTED EMERGENCY LIGHT WITH BACK UP BATTERY.
D	DIMMING SWITCH, 220V, 16AMP MOUNTED HEIGHT = 1300mm ABOVE FINISH FLOOR LEVEL FROM THE CENTER OF SWITCH
	ONE WAY SWITCH, 220V, 16AMP MOUNTED HEIGHT = 1300mm ABOVE FINISH FLOOR LEVEL FROM THE CENTER OF SWITCH
3	3 WAY SWITCH, 220V, 16AMP MOUNTED HEIGHT = 1300mm ABOVE FINISH FLOOR LEVEL FROM THE CENTER OF SWITCH
4	4 WAY SWITCH, 220V, 16AMP MOUNTED HEIGHT = 1300mm ABOVE FINISH FLOOR LEVEL FROM THE CENTER OF SWITCH

LOW CURRENT LEGEND:

TTC	TELEPHONE TERMINAL CABINET, SEE NOTE 3
	EQUIPMENT AS IDENTIFIED ON PLANS
	TELPHONE/DATA OUTLET DUPLEX, RJ-45, 4 PAIR CATEGORY 5E, SEE NOTE 2 & 5
FP	FIRE ALARM BOX FOR FUTURE INSTALLATION OF SELF SMOKE DETECTOR. LOCATE BOX A MIN. OF 1.0M FROM TIP OF FAN BLADE.
	TELEPHONE OUTLET ,RJ-45,4 PAIR CATEGORY 5E, SEE NOTE #2, 5

GROUNDING LEGEND:

	3 METER LENGTH, 0.02m DIAMETER , COPPER GROUNDING ROD
	UNDERGROUND BARE COPPER CONDUCTOR FOR CONNECTION BETWEEN GROUNDING RODS SIZE AS INDICATED ON THE PLAN
T	T-SPLICE EXOTHERMIC WELD
	AIR TERMINAL

POWER LEGEND:

	ELECTRICAL PANEL BOARD, SEE NOTE 4
MDP	MAIN DISTRIBUTION PANEL (MDP)
	NON FUSED DISCONNECT SWITCH ,220V ,50HZ ,20A (U.O.N)
	COMBINATION MOTOR STARTER SWITCH ,220V ,50HZ ,20A (U.O.N)
M	MANUAL MOTOR STARTER, WITH OVER LOAD PROTECTION RATING AS REQUIRED BY EXHAUST FAN MANUFACTURER MOUNTED HEIGHT = 1300mm ABOVE FINISH FLOOR LEVEL
3M	MOTOR RATED 3-SPEED SWITCH FOR CEILING FAN, 220V, 20AMP MOUNTED HEIGHT = 1300mm ABOVE FINISH FLOOR LEVEL
	RECESSED MOUNTED DUPLEX RECEPTACLES 1PH, 240V, 16A, 50HZ GROUNDING DIN TYPE. MOUNTING HEIGHT = 450mm ABOVE FINISH FLOOR LEVEL
GFI	RECESSED MOUNTED SINGLE RECEPTACLES 1PH, 240V, 16A, 50HZ GROUNDING DIN TYPE WITH GROUND FAULT INTERRUPTER AND SWITCH. MOUNTING HEIGHT =1300mm ABOVE FINISH FLOOR
CEE	RECESSED MOUNTED DUPLEX RECEPTACLES 3PH, 380V, 30A, 50HZ GROUNDING DIN TYPE MOUNTING HEIGHT =450mm ABOVE FINISH FLOOR
G	RECESSED MOUNTED DUPLEX RECEPTACLE LABEL INDICATE (HOSPITAL GRAD) 1PH, 240V, 16A, 50HZ GROUNDING DIN TYPE . MOUNTING HEIGHT =500mm ABOVE FINISH FLOOR INSULATED 4mm GROUNDING WIRE PER EACH RECEPTACLE
	SINGLE POWER SOCKET OUTLET, 220V, 50HZ, 20A MOUNTING HEIGHT = 450mm (U.O.N.)
PB	100mm x 100mm PULL BOX.
J	100mm x 100mm JUNCTION BOX
J CL	JUNCTION BOX FOR CEILING FAN WITH LIGHTS, SEE MECH STD. DETAILS
C.B	CIRCUIT BREAKER 30 AMP , 3 POLE , 380V , 50HZ
M	MOTORIZE DAMPER
REL	RELAY PANEL
M	MOTOR
H	HEATER
B XX-E-01	DETAIL DESIGNATION, TOP NUMBER INDICATE DETAIL NUMBER, BOTTOM LETTER INDICATES SHEET REF. NUMBER.

LIGHT FIXTURE NOTES:

1. ALL PENDANT MOUNTED FIXTURES ARE TO INCLUDE MANUFACTURERS "BALL-HANGER" TYPE CANOPY TO COMPENSATE FOR ROOF PITCH. FIELD CUT TO LENGTH.
2. ALL LIGHTING FIXTURES TO BE PROVIDED WITH "STANDARD" HIGH POWER FACTOR "ELECTRONIC" BALLASTS, UNLESS NOTED OTHERWISE.

LINE TYPE:

- - - - - - -	EXPOSED CONDUIT
————	EMBEDDED OR CONCEALED CONDUIT
- - -|- - - -	LIGHTNING PROTECTION CONDUCTOR

ABBREVIATIONS:

A	AMP
A.H.U.	AIR HANDLING UNIT
A/C	AIR CONDITIONING
A.C.U.	AIR CONDITION UNIT
A.F.F.	ABOVE FINNISH FLOOR LEVEL
C	CONDUIT
CB	CIRCUIT BREAKER
CHH	COMMUNICATION HANDHOLE
C.L.	CENTERLINE
C.O.E.	CORE OF ENGINEERS
CU	CONDENSING UNIT
ø, DIA	DIAMETER
EF	EXHAUST FAN
EHH	ELECTRICAL HANDHOLE
EMT	ELECTRIC METALLIC TUBING
EWH	ELECTRICAL WATER HEATER
FACP	FIRE ALARM CONTROL PANEL
GFI	GROUND FAULT INTERRUPTER
GRS	GALVANIZED RIGID STEEL
HZ	HERTZ
IR	IMPULSE RELAY
IL	INVERTED LEVEL
UTP	UNSHIELDED TWISTED PAIR
N.F.D.S	NON FUSED DISCONNECT SWITCH
L.C.	LIGHTING CONTACTOR
L.F.	LIGHT FIXTURE
LPI	LIGHTNING PROTECTION INSTITUTE
M	METER
MAX	MAXIMUM
MD	MOTORIZE DAMPER
MECH	MECHANICAL
MLO	MAIN LUGS ONLY
mm	MILLIMETER
P.A.C.U.	PACKAGE AIR CONDITION UNIT
PVC	POLYVINYL CHLORIDE
RM	ROOM
SF	SUPPLY FAN
S.U.	SPLIT UNIT
TRANS	TRANSFORMER
TTC	TELEPHONE TERMINAL CABINET
TYP	TYPICAL
TV	TELEVISION
U.O.N.	UNLESS OTHERWISE NOTED
V	VOLT
W	WATT
WP	WEATHER PROOF
WR	WELDING RECEPTACLE
RP	RECALCULATION PUMP

GENERAL NOTES:

1. MOUNTING HEIGHT OF SWITCHES 1.3M AFF UNLESS OTHERWISE NOTED.
2. MOUNT RECEPTACLES AND TELPHONE/DATA OUTLETS 450mm AFF UNLESS OTHERWISE NOTED. W=MOUNT 1.4M AFF.
3. MOUNT TELEPHONE TERMINAL CABINET (TTC) 1800mm FROM THE TOP OF CABINET TO FLOOR.
4. MOUNT ELECTRICAL PANELS 1800mm A.F.F. TO THE TOP OF THE PANEL.
5. TELEPHONE/DATA CABLE SHALL BE CAT 5E, 4 PAIRS
6. FOR EXACT LOCATION OF MECHANICAL EQUIPMENT REFER TO MECHANICAL DESIGN DRAWINGS.
7. EQUIPMENT SHALL BE RATED FOR 40 DEGREES C AND 2000 METERS (ABOVE SEA LEVEL) ELEVATION
8. THE GROUNDING RESISTANCE SHALL BE NO HIGHER THAN 25 OHMS , EXCEPT IN THE UPS AND EQUIPMENT ROOM SHALL BE 5 OHMS MEASURED MIN OF 48 HRS AFTER RAINFALL, ADDITIONAL RODS SHOULD BE USED TO ACHIEAVED THE REQUIRED RESISTANCE
9. ALL LIGHT FIXTURES SHALL BE SEISMICALLY BRACED.
10. ALL PANEL BOARD AIC RATINGS AS SHOWN ON SCHEDULES.
11. THE ELECTRICAL WIRING SHOWN ON PLAN DRAWINGS IS DIAGRAMMATIC AND INTENDED TO IDENTIFY THE CIRCUIT ARRANGEMENT FOR EACH AREA. THE CONDUIT CAN BE COMBINED FOR DIFFERENT CIRCUITS, PROVIDED THE INSTALLATION MEETS THE NEC, WITH NO MORE THAN 3 CONNECTIVE CIRCUITS IN ANY CONDUIT, SUCH AS 1, 3, 5 OR 2, 4, 6, ETC. THE 3 CIRCUITS CAN SHARE ONE NEUTRAL CONDUCTOR.

UNLESS OTHERWISE NOTED, LINEAR DIMENSIONS SHOWN ARE IN MILLIMETERS.

SYMBOL	DESCRIPTION	DATE	APP

Designed By:
Date: 10 MAY 2007
Drawn By:
File No. AF0707
Checked By:
I.S.O. Sheet File Name: AF0707CB-EL010N.dwg
Solicitation Number: -

US Army Corps of Engineers Transatlantic Programs Center

ANA REGIONAL BRIGADE
PAKTIKA, AFGHANISTAN
EMBEDDED TRAINING FACILITY
MWR
ELECTRICAL
LEGEND AND NOTES

SHEET REFERENCE NUMBER:
CB-GE-01

$DATE$
$FILE$

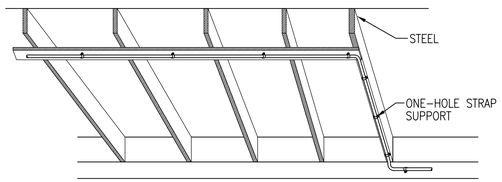

1 SURFACE MOUNTED CONDUIT SUPPORT

SCALE: N.T.S

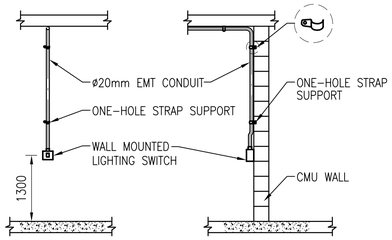

NOTE:-
WALL MOUNTED LIGHTING OUTLETS SHOULD BE CENTRAL ON A BLOCK, NOT BETWEEN TWO BLOCKS.

2 GENERAL INSTALLATION DETAIL FOR LIGHTING SWITCH (CONDUIT EXPOSED)

SCALE: N.T.S

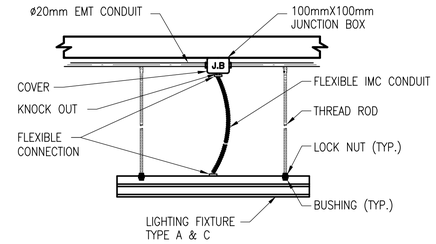

3 PENDANT LIGHT FIXTURE DETAIL (NOT USED)

SCALE: N.T.S

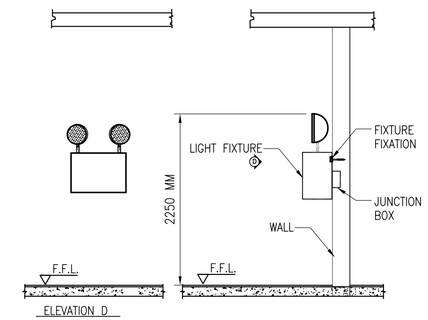

4 SURFACE EMERGENCY LIGHT FIXTURE DETAIL

SCALE: N.T.S

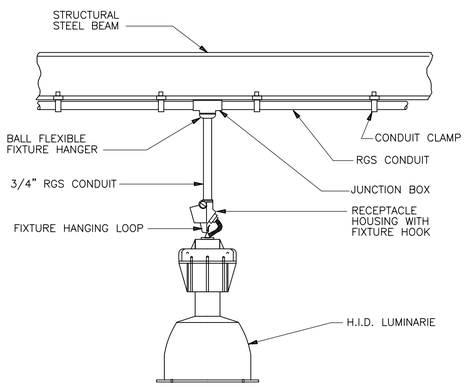

5 H.I.D. LUMINARIE PENDANT MOUNTED

SCALE: N.T.S

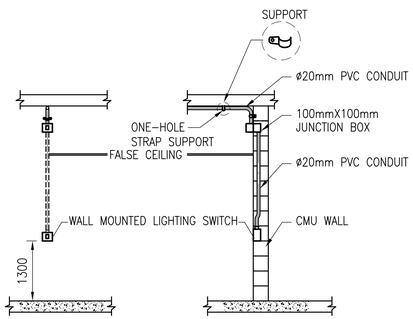

6 GENERAL INSTALLATION DETAIL FOR LIGHT SWITCH (CONDUIT CONCEALED)

SCALE: N.T.S

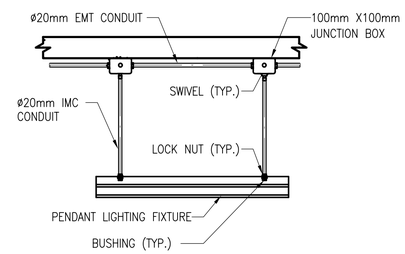

7 INSTALLATION OF LIGHTING FIXTURE IN SEISMIC BUILDING

SCALE: N.T.S

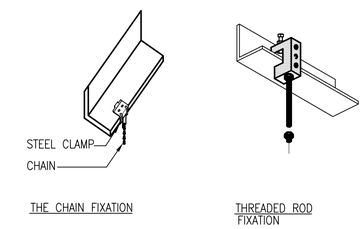

8 GENERAL SUPPORT DETAIL

SCALE: N.T.S

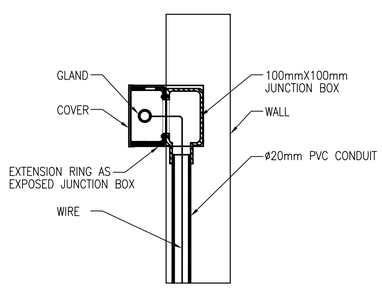

9 CONVERTING FROM EXPOSED TO EMBEDDED ROUTING IN WALL

SCALE: N.T.S

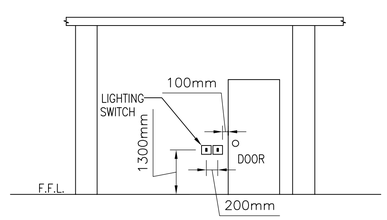

NOTE:-
THE LOCATION OF THE CONDUIT FEEDING THE FIRST SWITCH TO BE 100mm FROM THE DOOR OPENING

10 LIGHT SWITCH MOUNTING

SCALE: N.T.S

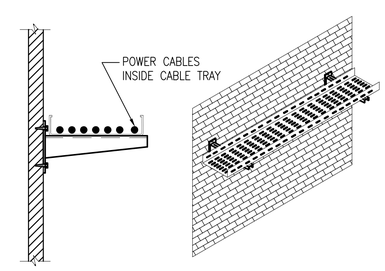

11 GENERAL INSTALLATION DETAIL FOR WALL MOUNTED CABLE TRAY

SCALE: N.T.S

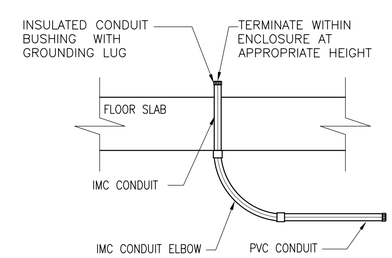

12 TYPICAL CONDUIT STUB-UP THROUGH FLOOR SLAB FOR FEEDING EQUIPMENT

SCALE: N.T.S

UNLESS OTHERWISE NOTED, LINEAR DIMENSIONS SHOWN ARE IN MILLIMETERS.

SYMBOL	DESCRIPTION	DATE	APR

Designed By:
Drawn By:
Checked By:
Date: 10 MAY 2007
File No. AF0707
I.S.O. Sheet File Name: AF0707CB-EL01D1.dwg
Solicitation Number: –

US Army Corps of Engineers Transatlantic Programs Center

ANA REGIONAL BRIGADE
PAKTIKA, AFGHANISTAN
EMBEDDED TRAINING FACILITY
MWR
ELECTRICAL DETAILS

SHEET REFERENCE NUMBER:
CB-DE-01

$DATE$
$FILE$

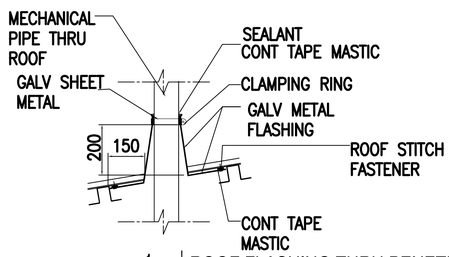

1 ROOF FLASHING THRU PENETRATION

SCALE: NTS

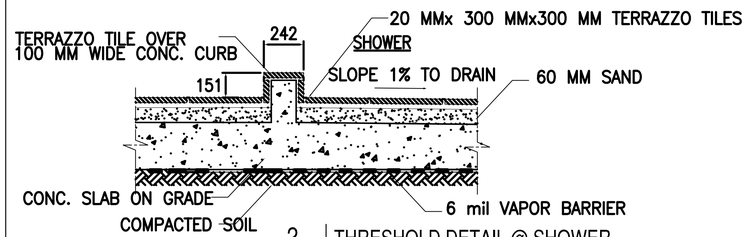

2 THRESHOLD DETAIL @ SHOWER

SCALE: NTS

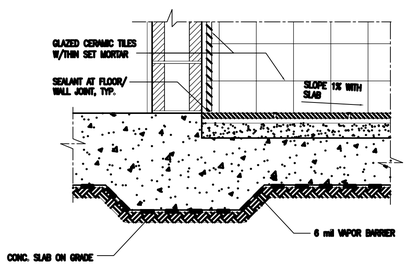

3 TERRAZZO TILE DETAIL

SCALE: NTS

NOT USED

4 ROOF EAVE DETAIL

SCALE: NTS

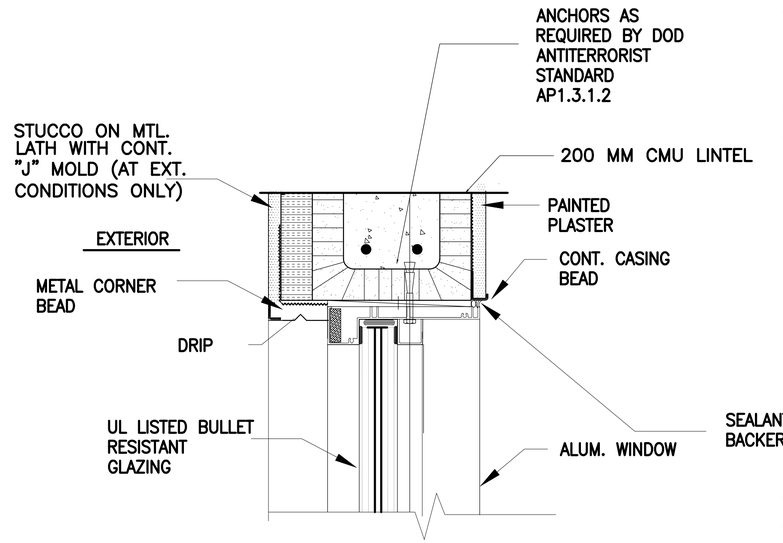

7 WINDOW HEAD DETAIL

SCALE: NTS

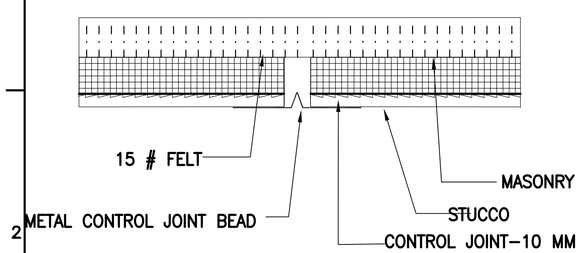

5 STUCCO CONTROL JOINT

SCALE: N.T.S.

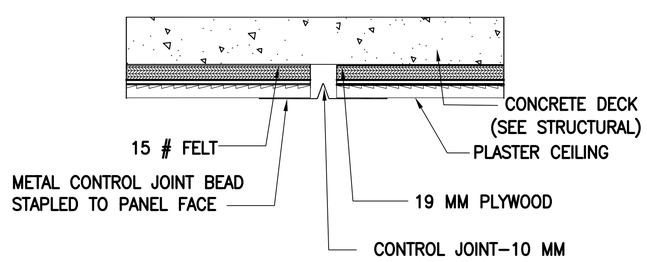

6 PLASTER CEILING CONTROL JOINT

SCALE: N.T.S.

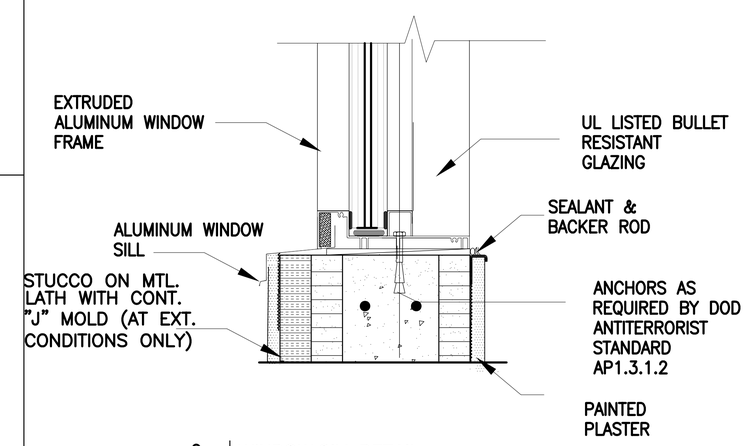

8 WINDOW SILL DETAIL

SCALE: NTS

UNLESS OTHERWISE NOTED, LINEAR DIMENSIONS SHOWN ARE IN MILLIMETERS.

SYMBOL	DESCRIPTION	DATE	APR

Designed By: R. E. BROWN
Date: 10 MAY 2007
Drawn By: R. E. BROWN
File No. AF0707
Checked By: B.R. THOMAS
I.S.O. Sheet File Name: AF0707CB-AR13DT.dwg
Solicitation Number: –

US Army Corps of Engineers Transatlantic Programs Center

ANA REGIONAL BRIGADE
PAKTIKA, AFGHANISTAN
INTERPRETER FACILITIES
MWR
MISCELLANEOUS DETAILS

SHEET REFERENCE NUMBER:
CB–A–13

$DATE$
$FILE$

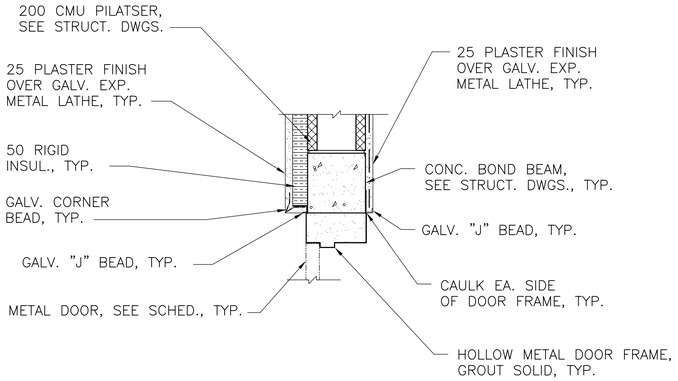

1 DETAIL - EXTERIOR DOOR HEAD

DB-A-01 REF. SCALE: 1:10

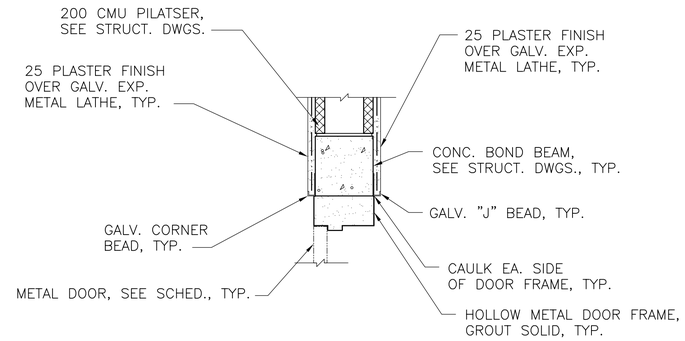

4 DETAIL - INTERIOR DOOR HEAD

DB-A-01 REF. SCALE: 1:10

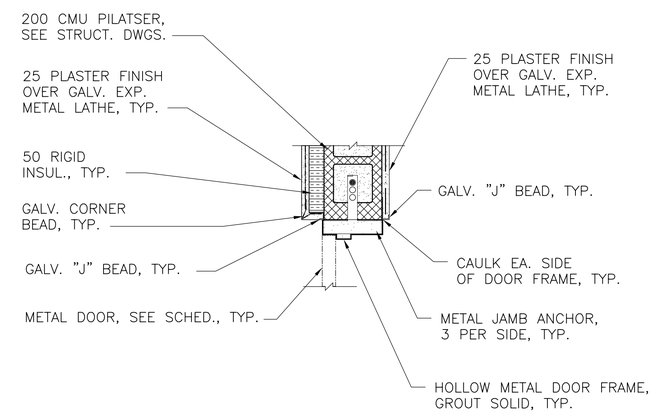

2 DETAIL - EXTERIOR DOOR JAMB

DB-A-01 REF. SCALE: 1:10

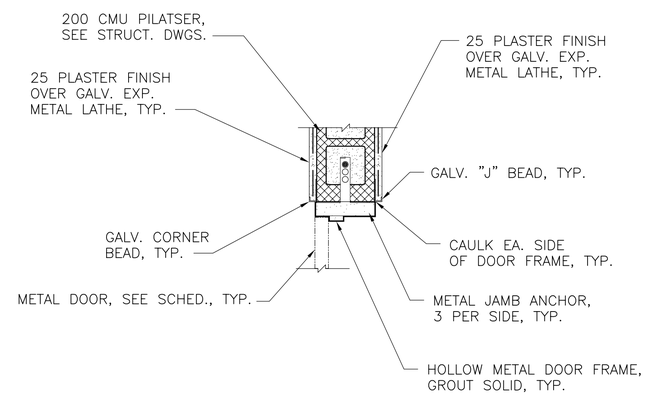

5 DETAIL - INTERIOR DOOR JAMB

DB-A-01 REF. SCALE: 1:10

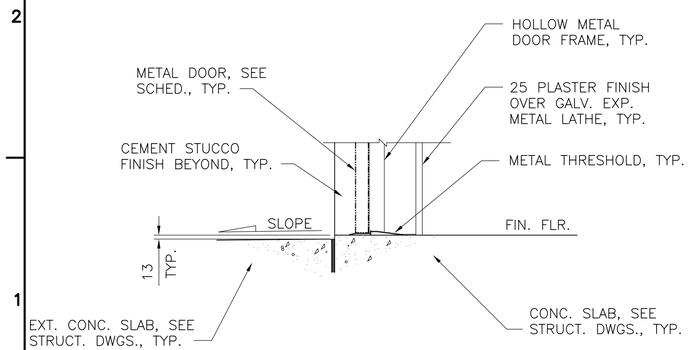

3 DETAIL - EXTERIOR DOOR SILL

DB-A-01 REF. SCALE: 1:10

GRAPHIC SCALE:

200 0 200mm
SCALE: 1 = 10

UNLESS OTHERWISE NOTED, LINEAR DIMENSIONS SHOWN ARE IN MILLIMETERS.

SYMBOL	DESCRIPTION	DATE	APP.

Designed By: R. BROWN
Date: 10 MAY 2007
Drawn By: D. GRIFFIN
File No. AF0707
Checked By: R. BROWN
I.S.O. Sheet File Name: AF0707CB-AR12DT.dwg
B. THOMAS
Solicitation Number: –

US Army Corps of Engineers Transatlantic Programs Center

ANA REGIONAL BRIGADE
PAKTIKA, AFGHANISTAN
INTERPRETER FACILITIES
MWR

DOOR AND COLUMN DETAILS

SHEET REFERENCE NUMBER:
CB–A–12

$DATE$
$FILE$

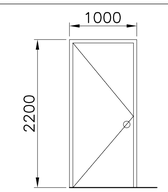

1 DOOR (D1)
SCALE: 1:40

1A DOOR (D1A) 20–MIN. FIRE RATED
SCALE: 1:40

1B DOOR (D1B) 45–MIN. FIRE RATED
SCALE: 1:40

1C DOOR (D1C) INSULATED
SCALE: 1:40

1D DOOR (D1D) 90–MIN. FIRE RATED
SCALE: 1:40

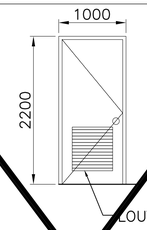

2 DOOR (D2)
SCALE: 1:40

2A DOOR (D2A) 20–MIN. FIRE RATED
SCALE: 1:40

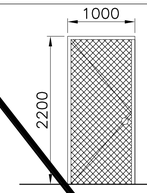

3 DOOR (D3)
SCALE: 1:40

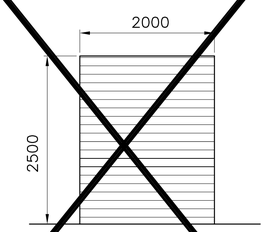

4 DOOR (D4)
SCALE: 1:40

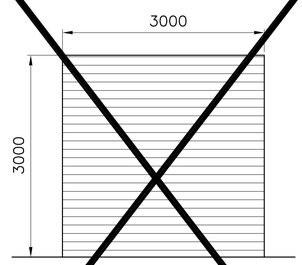

5 DOOR (D5)
SCALE: 1:40

5A DOOR (D5A)
SCALE: 1:40

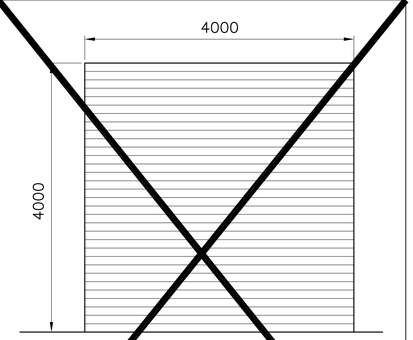

6 DOOR (D6)
SCALE: 1:40

6A DOOR (D6A)
SCALE: 1:40

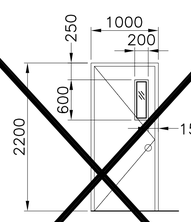

7 DOOR (D7)
SCALE: 1:40

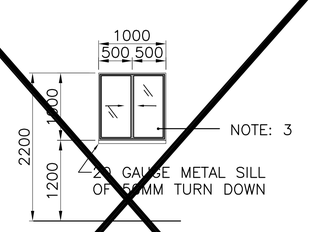

8 WINDOW (W1)
SCALE: 1:40

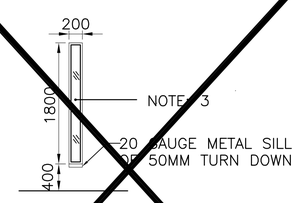

9 WINDOW (W2)
SCALE: 1:40

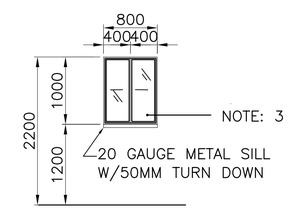

10 WINDOW (W3)
SCALE: 1:40

DOOR SCHEDULE

DOOR NO.	DIMENSION WIDTH	DIMENSION HEIGHT	PANEL NUMBER	OPENING SYSTEM	HDWR. NO.	MATERIAL
D1	1000	2200	1	HINGED	–	HM DOOR IN HM FRAME
~~D1A~~	~~1000~~	~~2200~~	~~1~~	~~HINGED~~		HM DOOR IN HM FRAME; 20 MIN FIRE RATED
~~D1B~~	~~1000~~	~~2200~~	~~1~~	~~HINGED~~		HM DOOR IN HM FRAME; 45 MIN FIRE RATED
D1C	1000	2200	1	HINGED	–	HM DOOR IN HM FRAME; INSULATED
~~D1D~~	~~1000~~	~~2200~~	~~1~~	~~HINGED~~		HM DOOR IN HM FRAME; 90 MIN FIRE RATED
D2	3000	3000	1	HINGED	–	HM DOOR IN HM FRAME W/ LOUVER
D2A	3000	4000	1	HINGED	–	HM DOOR IN HM FRAME W/ FIRE DAMPER FUSIBLE LINK LOUVER 20 MIN FIRE RATED
~~D3~~	~~1000~~	~~2200~~	~~1~~	~~HINGED~~		WELDED WIRE MESH IN STEEL FRAME
~~D4~~	~~2000~~	~~2500~~	~~1~~	~~ROLL UP~~		STEEL DOOR & FRAM, MANUALLY OPERATED, INSULATED
~~D5~~	~~3000~~	~~3000~~	~~1~~	~~ROLL UP~~		STEEL DOOR & FRAM, MANUALLY OPERATED, INSULATED
~~D5A~~	~~3000~~	~~3000~~	~~1~~	~~ROLL UP~~		STEEL DOOR & FRAM, MANUALLY OPERATED, UNINSULATED
~~D6~~	~~4000~~	~~4000~~	~~1~~	~~ROLL UP~~		STEEL DOOR & FRAM, MANUALLY OPERATED, INSULATED
~~D6A~~	~~4000~~	~~4000~~	~~1~~	~~ROLL UP~~		STEEL DOOR & FRAM, MANUALLY OPERATED, INSULATED
D7	1000	2200	1	HINGED	–	HM DOOR IN HM FRAME W/ LAMINATED GLAZING

WINDOW SCHEDULE

WINDOW NUMBER	DIMENSION WIDTH	DIMENSION HEIGHT	DIMENSION SILL HEIGHT	PANEL NUMBER	OPENING SYSTEM	DESCRIPTION
W1	1000	1000	1700	2	SLIDING	ALUM. PANELS W/TRANSPARENT 6MM GLASS METAL SILL AND FIXED INSECT METAL SCREEN
W2	200	1800	400	1	FIXED	ALUM. PANELS W/6MM WIRE GLASS
W3	800	1000	1700	2	SLIDING	ALUM. PANELS W/TRANSPARENT 6MM GLASS METAL SILL AND FIXED INSECT METAL SCREEN

NOTES:

1. FOR HARDWARE SET DESCRIPTION SEE SPECIFICATIONS SECTION.
2. ITEMS BLOCKED OUT, OR LINED THROUGH, DO NOT APPLY TO THIS FACILITY.
3. ALL GLAZING SHALL BE LAMINATED.

GRAPHIC SCALE:

200 0 200mm
SCALE: 1 = 10

UNLESS OTHERWISE NOTED, LINEAR DIMENSIONS SHOWN ARE IN MILLIMETERS.

SYMBOL	DESCRIPTION	DATE	APP.

Designed By: R. BROWN
Drawn By: D. GRIFFIN
Checked By: R. BROWN
B. THOMAS
Date: 10 MAY 2007
File No. AF0707
I.S.O. Sheet File Name: AF0707CB–AR11SC.dwg
Solicitation Number: –

US Army Corps of Engineers Transatlantic Programs Center

ANA REGIONAL BRIGADE
PAKTIKA, AFGHANISTAN
INTERPRETER FACILITIES
MWR

DOOR & WINDOW SCHEDULE

SHEET REFERENCE NUMBER:
CB–A–11

$DATE$
$FILE$

FINISH SCHEDULE

ROOM NO.	ROOM NAME	FLOOR	CEILING	INTERIOR WALLS				REMARKS
				NORTH	EAST	SOUTH	WEST	
100	CORRIDOR	F1	C1	W1	W1	W1	W1	–
101	COMPUTER/INTERNET	F1	C1	W1	W1	W1	W1	–
102	TV/MEDIA ROOM	F1	C1	W1	W1	W1	W1	–
103	READING ROOM/LIBRARY	F1	C1	W1	W1	W1	W1	–
104	JANITOR	F2	C3	W3	W3	W3	W3	W/O PLASTER FINISH – INTERIOR ONLY.
105	COMM ROOM	F2	C3	W3	W3	W3	W3	W/O PLASTER FINISH – INTERIOR ONLY.
106	REST ROOM	F1	C1	W2	W2	W2	W2	–
107	RECREATION ROOM	F1	C1	W1	W1	W1	W1	–

FINISHING SCHEDULE LEGEND

FLOOR	
F1	TERRAZO TILE
F2	SEALED CONCRETE
WALL	
W1	CMU W/ PAINTED PLASTER
W2	CERAMIC TILE
W3	PAINTED CMU
CEILING	
C1	PAINTED 25 MM PLASTER
C2	PAINTED EXPOSED PLYWOOD
C3	PAINTED EXPOSED CONRETE
WALL SYMBOLS:	
	CMU WALL
CJ	CONTROL JOINT

NOTES:

1– ALL WALLS ARE 200MM THK. CMU UNLESS NOTED OTHERWISE.

2– ALL WALLS TERMINATE AT CEILING UNLESS NOTED OTHERWISE. REF. STRUCT. DRWGS.

3– ALL DOOR JAMBS ARE 200MM UNLESS OTHERWISE NOTED.

4– ALL DIMENSIONS ARE TO FACE OF CMU UNLESS NOTED OTHERWISE.

5– ALL VERTICAL DIMENSIONS & LEVELS ARE FROM GROUND FLOOR FINISHED SLAB. THIS ELEVATION IS +0000.

6– OPEN

7– SEE STRUCTURAL DRAWINGS FOR LOCATION OF BUILDING CONTROL, EXPANSION AND SEISMIC JOINTS.

8– ALL HVAC OPENINGS DIMENSION SHALL BE VERIFIED WITH APPROVED SUBMITTALS.

9– ALL EXPOSED PURLINS, COLUMNS, FRAMES, AND GIRTS SHALL BE PAINTED.

10– TOTAL AREA OF BUILDING IS 200.00 M2.

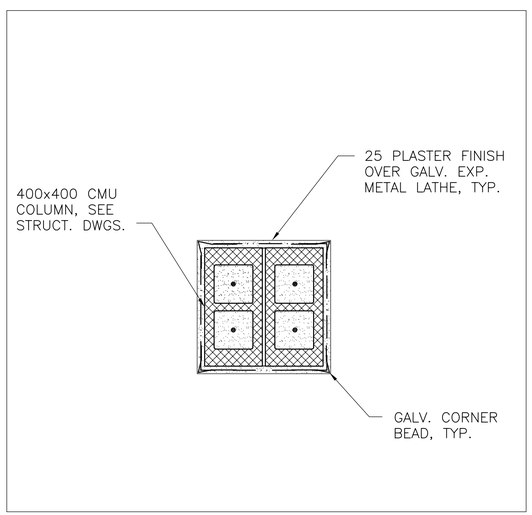

1 SECTION
CB–A–01 REF. SCALE: 1:10

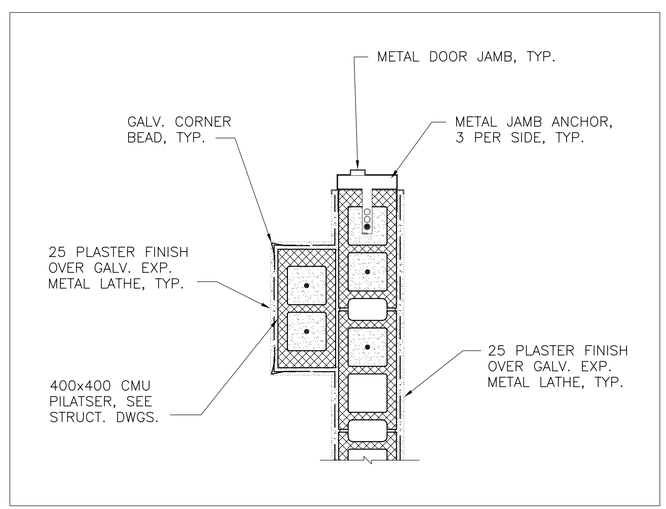

2 SECTION
CB–A–01 REF. SCALE: 1:10

GRAPHIC SCALE:

200 0 200mm
SCALE: 1 = 10

UNLESS OTHERWISE NOTED, LINEAR DIMENSIONS SHOWN ARE IN MILLIMETERS.

SYMBOL	DESCRIPTION	DATE	APR

Designed By: R. BROWN
Drawn By: D. GRIFFIN
Checked By: R. BROWN
B. THOMAS

Date: 10 MAY 2007
File No. AF0707
I.S.O. Sheet File Name: AF0707CB–AR10SC.dwg
Solicitation Number: –

US Army Corps of Engineers Transatlantic Programs Center

ANA REGIONAL BRIGADE
PAKTIKA, AFGHANISTAN
INTERPRETER FACILITIES
MWR

WALL SECTIONS

SHEET REFERENCE NUMBER:
CB–A–10

$DATE$
$FILE$

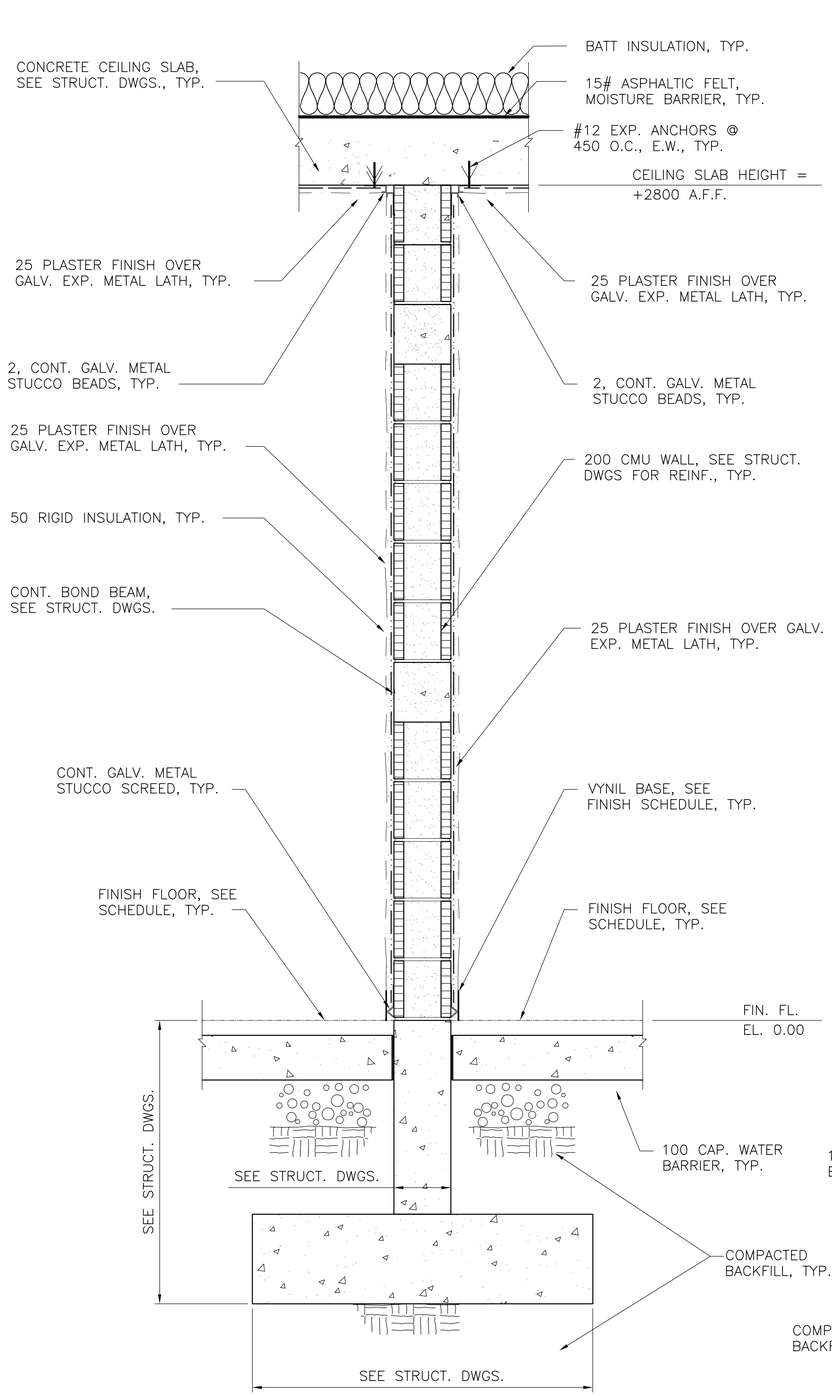

A SECTION

CB-A-01 | REF. | SCALE: 1:10

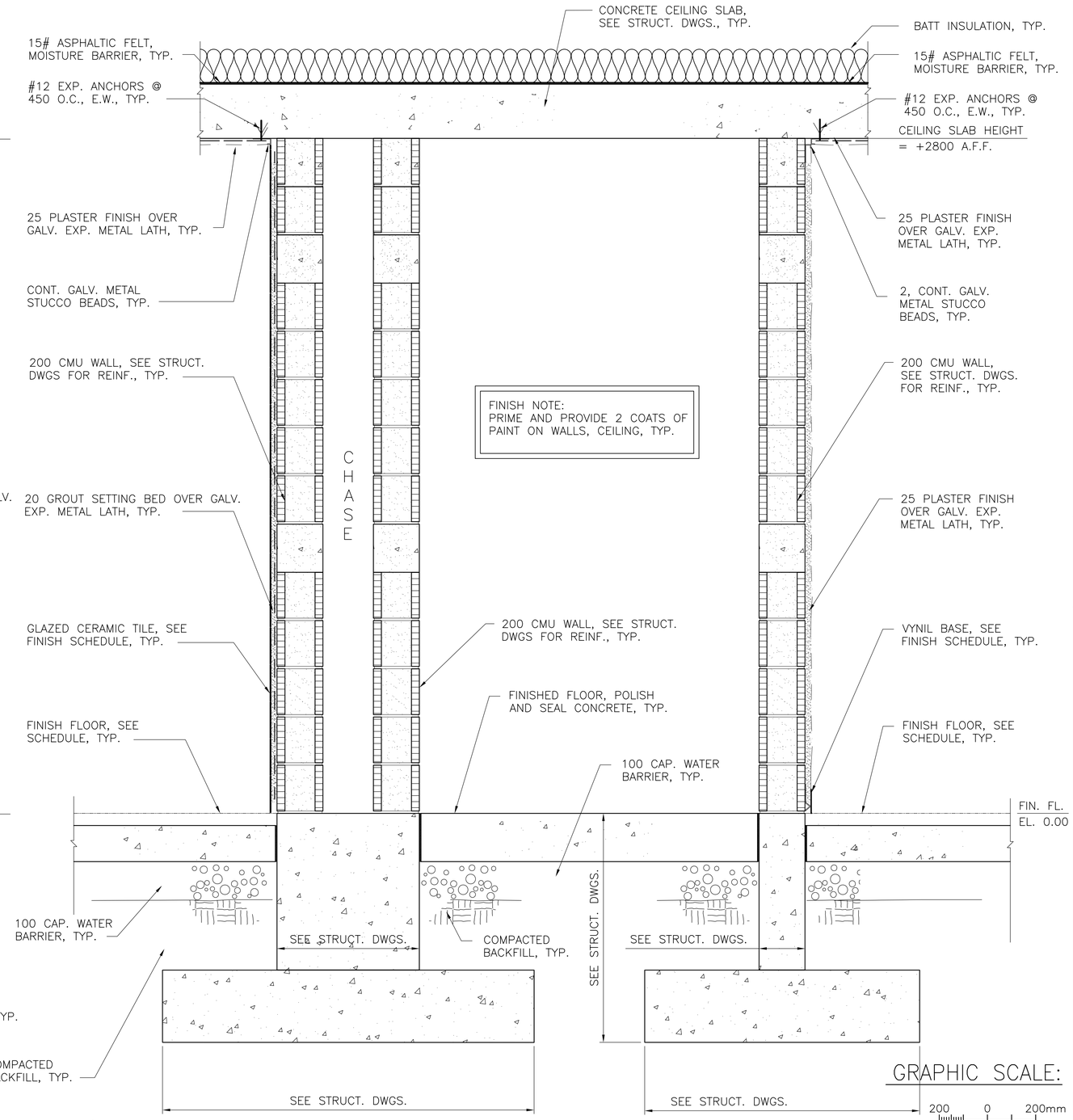

FINISH NOTE:
PRIME AND PROVIDE 2 COATS OF PAINT ON WALLS, CEILING, TYP.

B SECTION

CB-A-01 | REF. | SCALE: 1:10

NOTE:
FOR WALL LOCATIONS SEE PLAN.

GRAPHIC SCALE:
200 0 200mm
SCALE: 1 = 10

UNLESS OTHERWISE NOTED, LINEAR DIMENSIONS SHOWN ARE IN MILLIMETERS.

SYMBOL	DESCRIPTION	DATE	APP.

Designed By: R. BROWN
Drawn By: D. GRIFFIN
Checked By: R. BROWN
B. THOMAS
Date: 10 MAY 2007
File No. AF0707
I.S.O. Sheet File Name: AF0707CB-AR09SE.dwg
Solicitation Number: –

US Army Corps of Engineers Transatlantic Programs Center

ANA REGIONAL BRIGADE
PAKTIKA, AFGHANISTAN
INTERPRETER FACILITIES
MWR

INTERIOR WALL SECTION

SHEET REFERENCE NUMBER:
CB–A–09

$DATE$
$FILE$

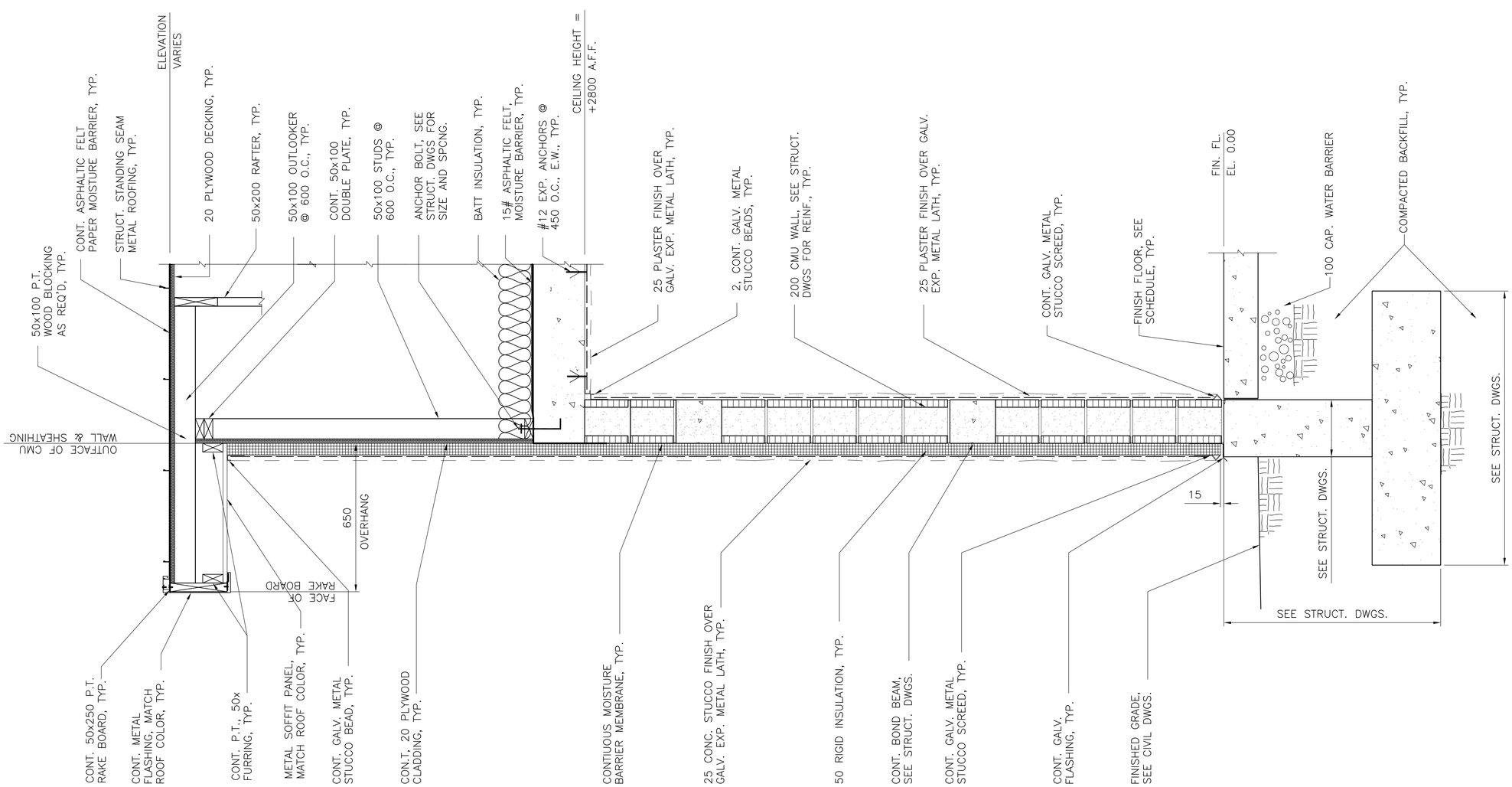

A SECTION

CB-A-01 | REF.

SCALE: 1:10

SYMBOL	DESCRIPTION	DATE	APP.

Designed By: R. BROWN
Date: 10 MAY 2007
Drawn By: D. GRIFFIN
File No. AF0707
Checked By: R. BROWN
I.S.O. Sheet File Name: AF0707CB-AR08SE.dwg
B. THOMAS
Solicitation Number: –

US Army Corps of Engineers Transatlantic Programs Center

ANA REGIONAL BRIGADE
PAKTIKA, AFGHANISTAN
INTERPRETER FACILITIES
MWR

WALL SECTION

SHEET REFERENCE NUMBER:
CB–A–08

GRAPHIC SCALE:

200 0 200mm
SCALE: 1 = 10

UNLESS OTHERWISE NOTED, LINEAR DIMENSIONS SHOWN ARE IN MILLIMETERS.

$DATE$
$FILE$

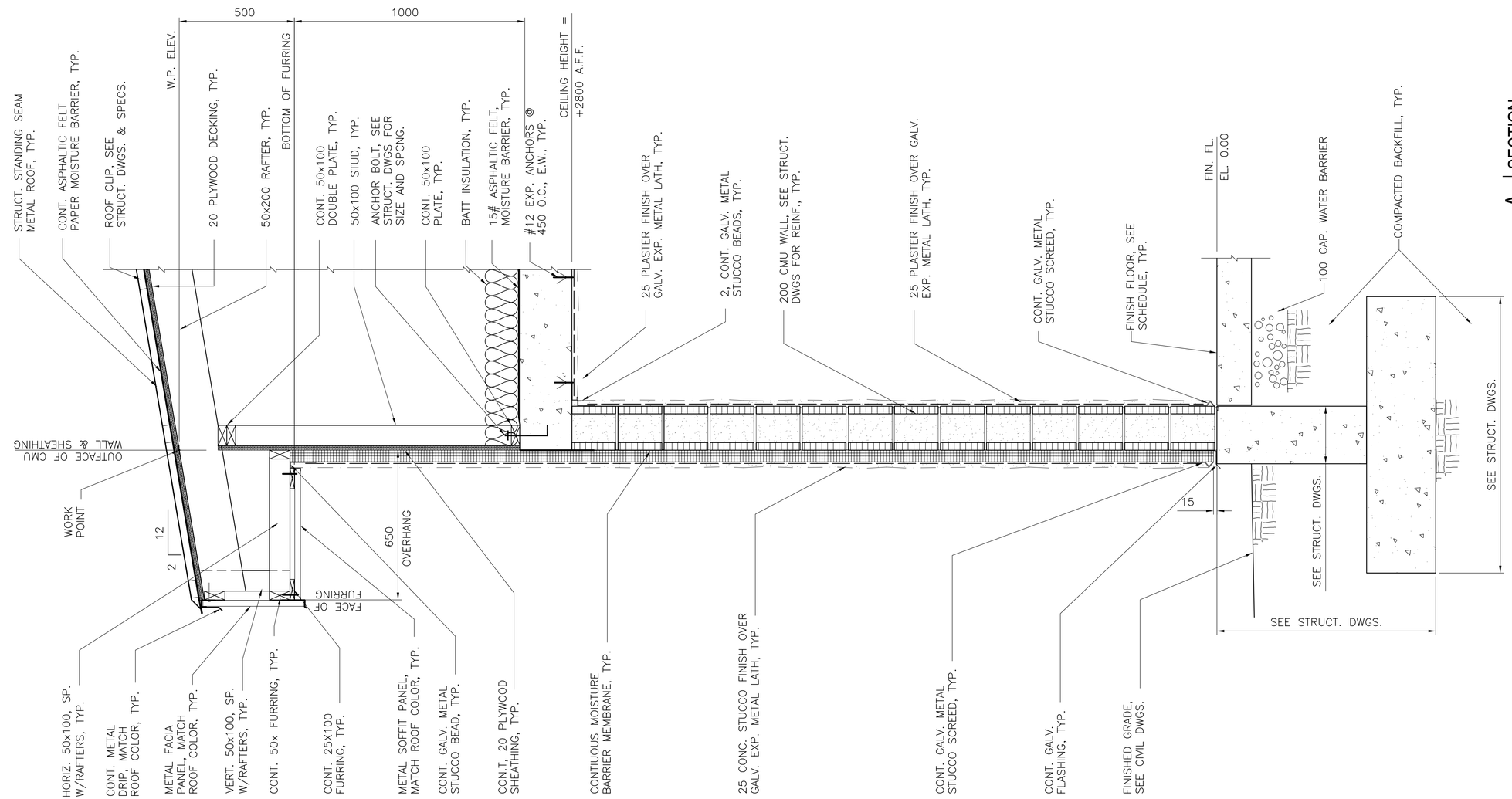

A SECTION

CB-A-01 | REF.

SCALE: 1:10

GRAPHIC SCALE:

200 0 200mm

SCALE: 1 = 10

UNLESS OTHERWISE NOTED, LINEAR DIMENSIONS SHOWN ARE IN MILLIMETERS.

SYMBOL	DESCRIPTION	DATE	APP.

Designed By: R. BROWN
Drawn By: D. GRIFFIN
Checked By: R. BROWN
B. THOMAS

Date: 10 MAY 2007
File No. AF0707
I.S.O. Sheet File Name: AF0707CB-AR07SE.dwg
Solicitation Number: –

US Army Corps of Engineers Transatlantic Programs Center

ANA REGIONAL BRIGADE
PAKTIKA, AFGHANISTAN
INTERPRETER FACILITIES
MWR

WALL SECTION

SHEET REFERENCE NUMBER:
CB–A–07

$DATE$
$FILE$

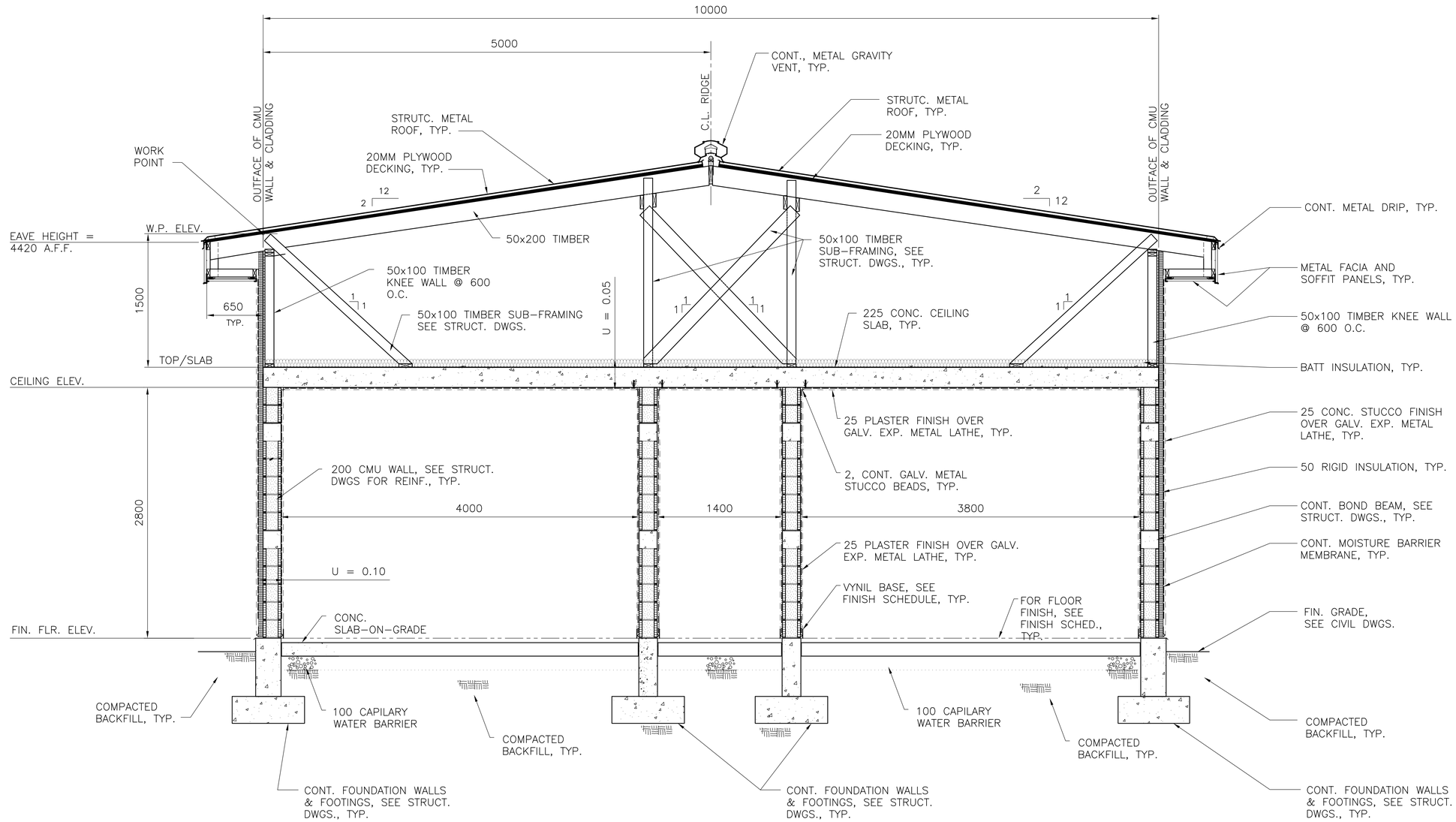

A | BUILDING SECTION

CB-A-01 | REF. | SCALE: 1:25

GRAPHIC SCALE:

500 0 500mm

SCALE: 1 = 25

UNLESS OTHERWISE NOTED, LINEAR DIMENSIONS SHOWN ARE IN MILLIMETERS.

SYMBOL	DESCRIPTION	DATE	APP.

Designed By: R. BROWN
Drawn By: D. GRIFFIN
Checked By: R. BROWN
B. THOMAS
Date: 10 MAY 2007
File No. AF0707
I.S.O. Sheet File Name: AF0707CB-AR06SE.dwg
Solicitation Number: -

US Army Corps of Engineers Transatlantic Programs Center

ANA REGIONAL BRIGADE
PAKTIKA, AFGHANISTAN
INTERPRETER FACILITIES
MWR

BUILDING SECTION

SHEET REFERENCE NUMBER:
CB-A-06

$DATE$
$FILE$

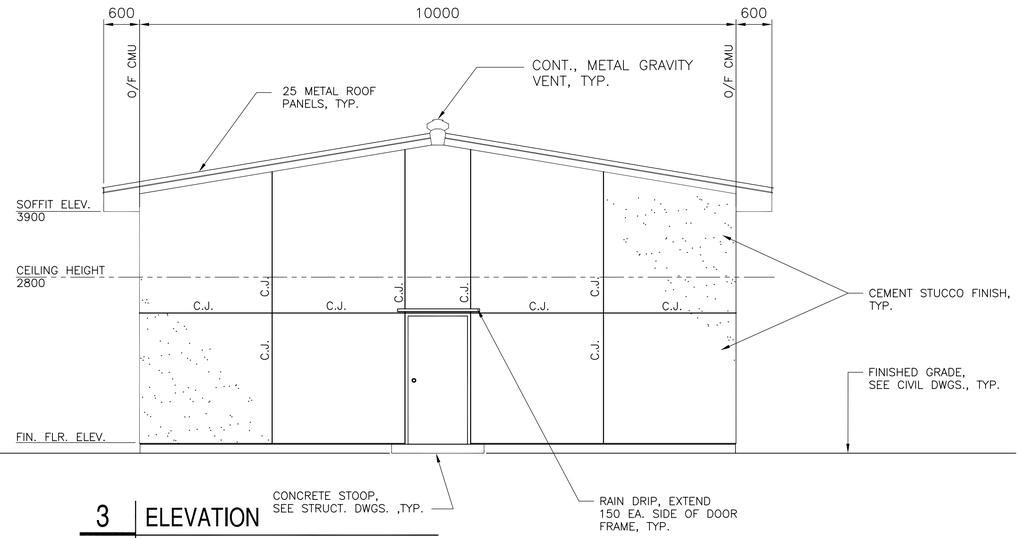

3 ELEVATION

CB-A-01 REF. SCALE: 1:50

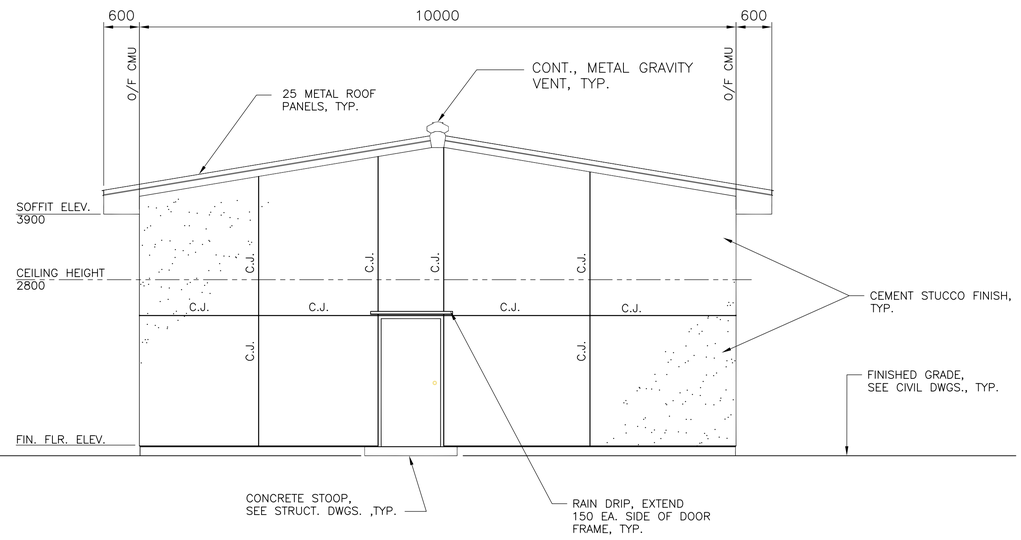

4 ELEVATION

CB-A-01 REF. SCALE: 1:50

GRAPHIC SCALE:

1000 0 1000mm

SCALE: 1 = 50

UNLESS OTHERWISE NOTED, LINEAR DIMENSIONS SHOWN ARE IN MILLIMETERS.

SYMBOL	DESCRIPTION	DATE	APP.

Designed By: R. BROWN
Drawn By: D. GRIFFIN
Checked By: R. BROWN
B. THOMAS

Date: 10 MAY 2007
File No. AF0707
I.S.O. Sheet File Name: AF0707CB-AR05EL.dwg
Solicitation Number: –

US Army Corps of Engineers Transatlantic Programs Center

ANA REGIONAL BRIGADE
PAKTIKA, AFGHANISTAN
INTERPRETER FACILITIES
MWR

ELEVATIONS

SHEET REFERENCE NUMBER:
CB–A–05

$DATE$
$FILE$

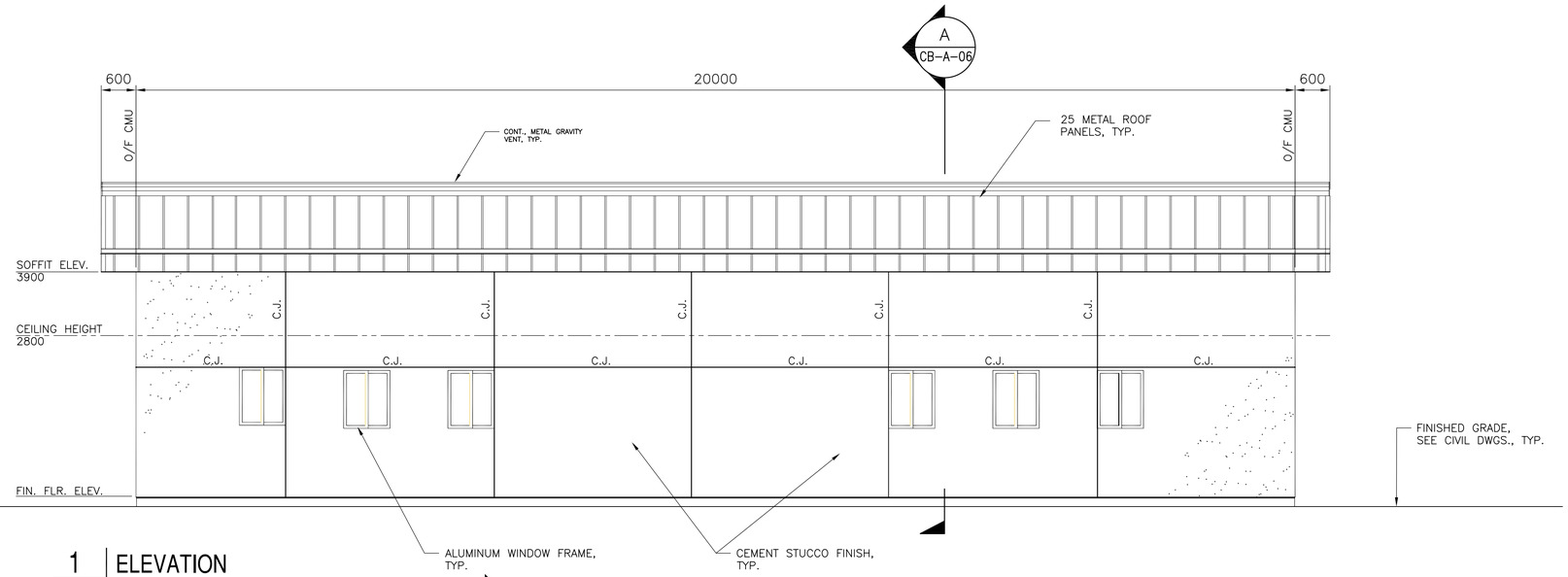

1 ELEVATION

CB-A-01 REF. SCALE: 1:50

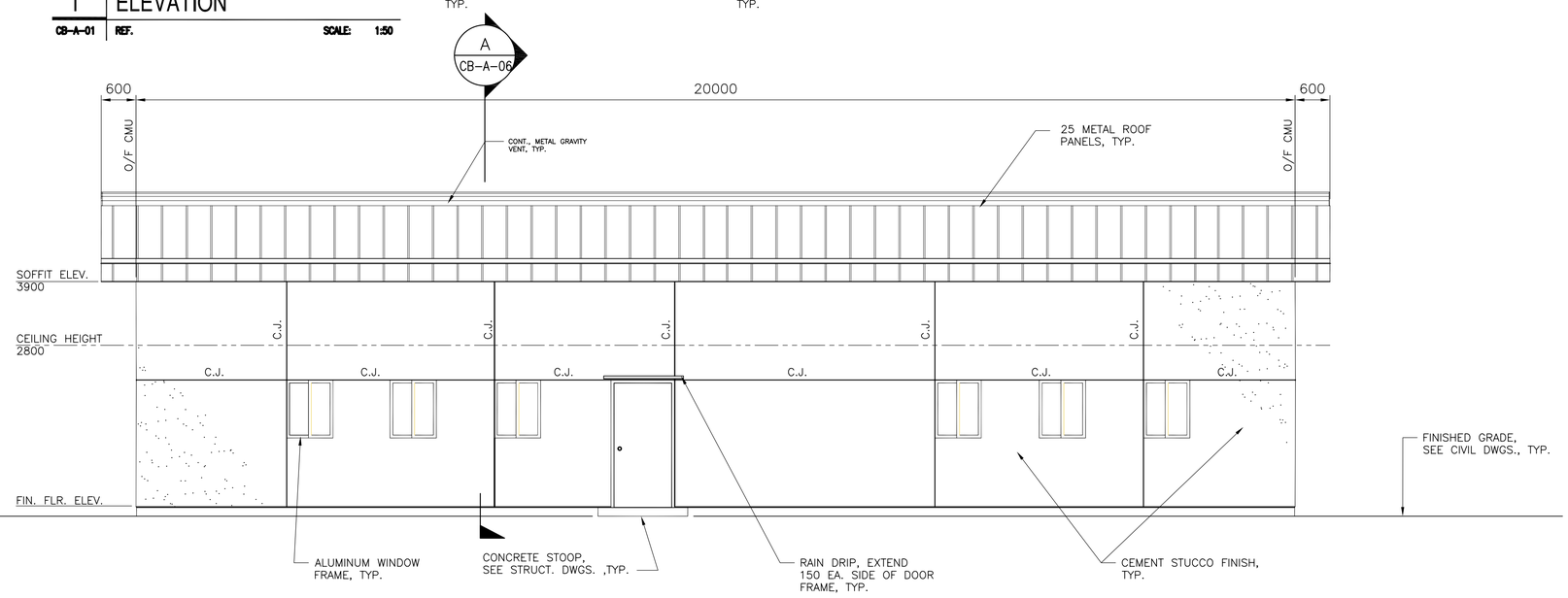

2 ELEVATION

CB-A-01 REF. SCALE: 1:50

GRAPHIC SCALE:

1000 0 1000mm

SCALE: 1 = 50

UNLESS OTHERWISE NOTED, LINEAR DIMENSIONS SHOWN ARE IN MILLIMETERS.

SYMBOL	DESCRIPTION	DATE	APP.

Designed By: R. BROWN
Date: 10 MAY 2007
Drawn By: D. GRIFFIN
File No. AF0707
Checked By: R. BROWN
I.S.O. Sheet File Name: AF0707CB-AR04EL.dwg
B. THOMAS
Solicitation Number: –

US Army Corps of Engineers Transatlantic Programs Center

ANA REGIONAL BRIGADE
PAKTIKA, AFGHANISTAN
INTERPRETER FACILITIES
MWR

ELEVATIONS

SHEET REFERENCE NUMBER:
CB–A–04

$DATE$
$FILE$

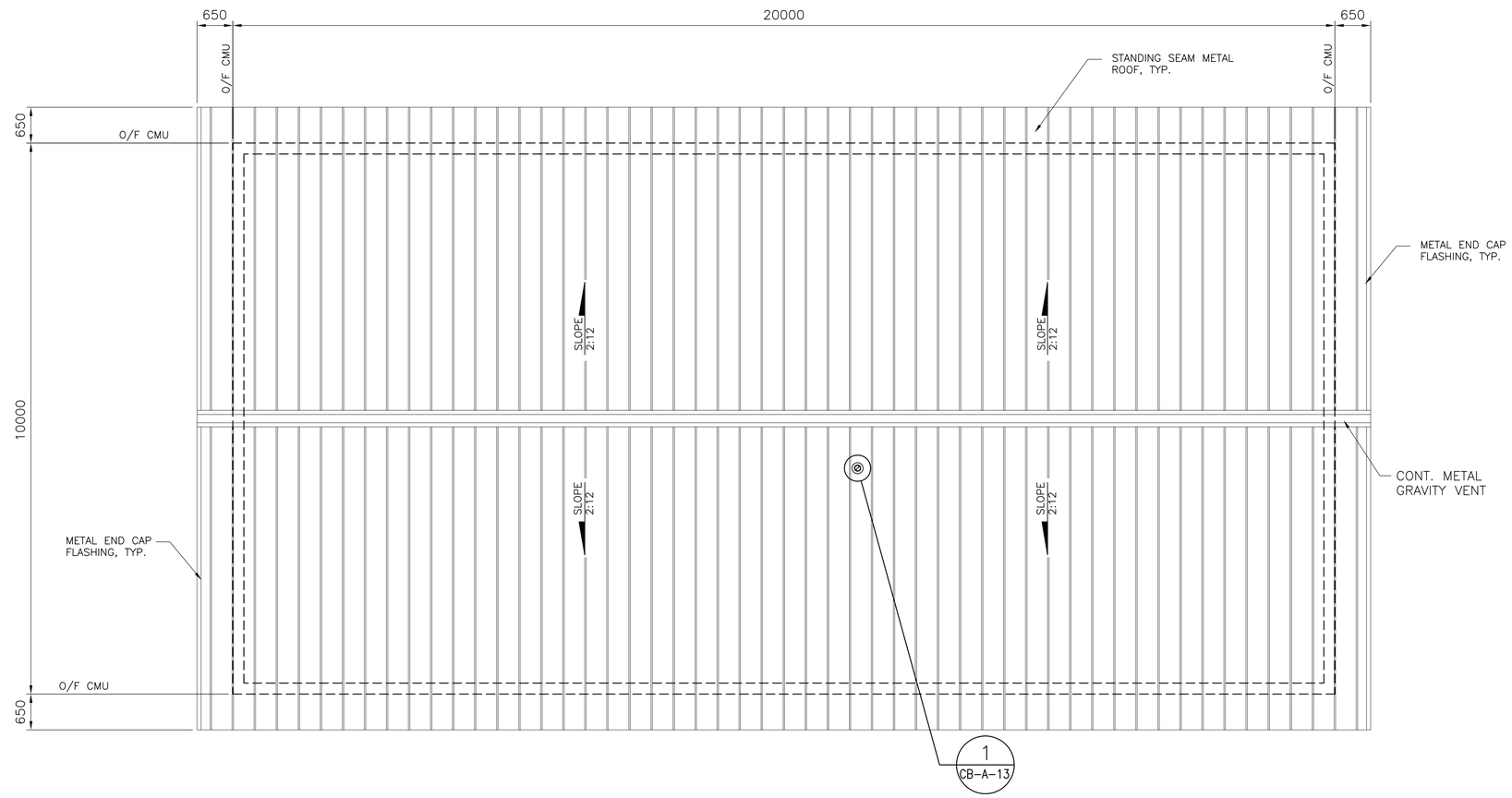

DWR – ROOF PLAN

SCALE: 1:50

1000 0 1000mm
SCALE: 1 = 50

UNLESS OTHERWISE NOTED, LINEAR DIMENSIONS SHOWN ARE IN MILLIMETERS.

SYMBOL	DESCRIPTION	DATE	APP.

Designed By: R. BROWN
Date: 10 MAY 2007
Drawn By: D. GRIFFIN
File No. AF0707
Checked By: R. BROWN
I.S.O. Sheet File Name: AF0707CB-AR03PN.dwg
B. THOMAS
Solicitation Number: –

US Army Corps of Engineers Transatlantic Programs Center

ANA REGIONAL BRIGADE
PAKTIKA, AFGHANISTAN
INTERPRETER FACILITIES
MWR

ROOF PLAN

SHEET REFERENCE NUMBER:
CB–A–03

$DATE$
$FILE$

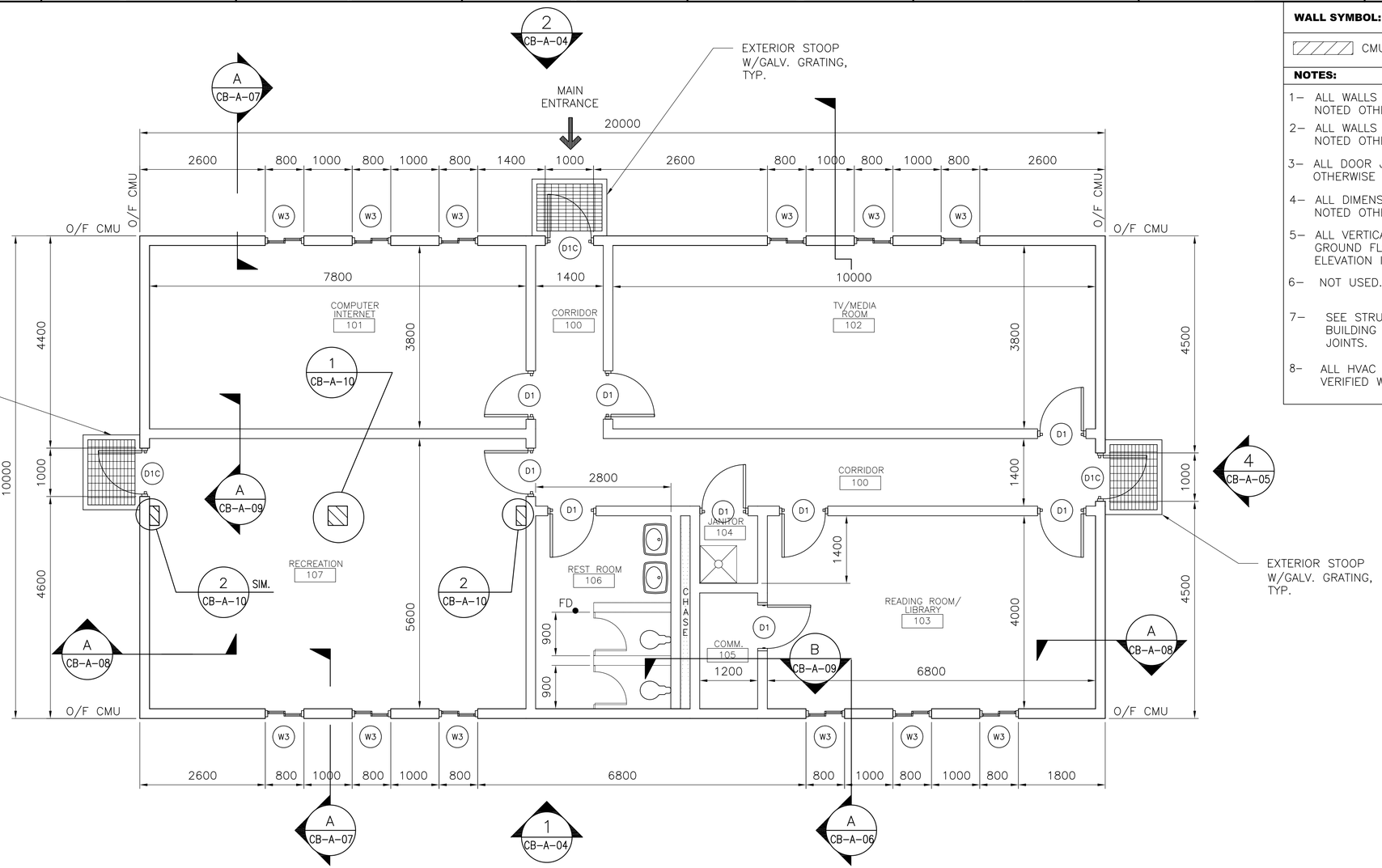

DWR – FLOOR PLAN

SCALE: 1:50

WALL SYMBOL:

CMU WALL

NOTES:

1– ALL WALLS ARE 200MM THK. CMU UNLESS NOTED OTHERWISE.

2– ALL WALLS TERMINATE AT CEILING UNLESS NOTED OTHERWISE. REF. STRUCT. DRWGS.

3– ALL DOOR JAMBS ARE 200MM UNLESS OTHERWISE NOTED.

4– ALL DIMENSIONS ARE TO FACE OF CMU UNLESS NOTED OTHERWISE.

5– ALL VERTICAL DIMENSIONS & LEVELS ARE FROM GROUND FLOOR FINISHED SLAB. THIS ELEVATION IS +0000.

6– NOT USED.

7– SEE STRUCTURAL DRAWINGS FOR LOCATION OF BUILDING CONTROL, EXPANSION AND SEISMIC JOINTS.

8– ALL HVAC OPENINGS DIMENSION SHALL BE VERIFIED WITH APPROVED SUBMITTALS.

SYMBOL	DESCRIPTION	DATE	APP.

Designed By: R. BROWN
Drawn By: D. GRIFFIN
Checked By: R. BROWN
B. THOMAS

Date: 10 MAY 2007
File No. AF0707
I.S.O. Sheet File Name: AF0707CB-AR01PN.dwg
Solicitation Number: –

US Army Corps of Engineers Transatlantic Programs Center

ANA REGIONAL BRIGADE
PAKTIKA, AFGHANISTAN
INTERPRETER FACILITIES
MWR

FLOOR PLAN

SHEET REFERENCE NUMBER:
CB–A–01

GRAPHIC SCALE:

1000 0 1000mm
SCALE: 1 = 50

UNLESS OTHERWISE NOTED, LINEAR DIMENSIONS SHOWN ARE IN MILLIMETERS.

$DATE$
$FILE$

ARCHITECTURAL ABBREVIATIONS

A	
ABOVE FINISH FLOOR	AFF
ACCESS PANEL	AP
ACOUSTIC	ACOUS (ACST)
ACTIVE LEAF	A/L
AGGREGATE	AGG
AIR CONDITIONING	A/C
ALUMINUM	ALUM (AL)
ANCHOR BOLT	AB
AND	&
ANGLE	∠ (ANG)
ARCHITECTURAL	ARCH
AREA INLET	AI.
ASPHALT	ASPH
AT	@
AUTOMATIC	AUTO
B	
BACK OF WALL	BOW
BATTEN INSULATION	BATT INSUL
BEAM	BM
BEARING	BRG
BITUMINOUS	BIT (BITUM)
BLOCK	BLK
BLOCKING	BLKG
BOARD	BD
BOTTOM	BOT (BOTT)
BRACING	BRCG
BRACKET	BRKT
BUILDING	BLDG
C	
CABINET	CAB
CAST IRON	CI
CATCH BASIN	CB
CEILING	CLG
CEMENT	CEM
CENTER	CTR
CENTER LINE	℄ OR CL
CENTER TO CENTER	CC
CERAMIC TILE	CT
CIRCULAR	CIR
CLEANOUT	CO
CLEAR	CLR
CLOSET	CLO
COLUMN	COL
CONCRETE	CONC
CONCRETE MASONRY UNITS	CMU
CONNECTION	CONN
CONSTRUCTION	CONSTR
CONSTRUCTION JOINT	CONSTR JT
CONTINUOUS	CONT.
CONTROL JOINT	CJ
CORNER	COR
CORRIDOR	CORR
COUNTER	CNTR
COUNTER SUNK	CSK
D	
DAMPPROOFING	DP
DETAIL	DET (DETL)
DIAGONAL	DIAG
DIAMETER	DIA
DIMENSION	DIM
DISPENSER	DISP
DOOR	DR
DOUBLE	DBL
DOWN	DN
DRAWER	DWR
DRAWING	DWG
DRINKING FOUNTAIN	DF
E	
EACH	EA
ELECTRICAL OR ELECTRIC	ELEC
ELEVATION	EL.
EMERGENCY	EMERG
ENCLOSURE	ENCL
ENTRANCE	ENTR
EQUIPMENT	EQUIP (EQPT)
EQUAL	EQ
EXHAUST	EXH
EXISTING	EXIST.
EXPANSION	EXPN
EXPANSION JOINT	EJ (EXP JT)
EXTERIOR	EXT
F	
FACE OF CONCRETE	FOC
FACE OF FINISH	FOF
FACE OF MASONRY	FOM
FACE OF WALL	FOW
FINISH	FIN.
FIRE HYDRANT	FH
FIXTURE	FIX
FLASHING	FLASH
FLOOR	FLR OR FL
FLOOR DRAIN	FD
FLOORING	FLG
FOOTING	FTG
FOUNDATION	FDN
FRAME	FR
FINISH FLOOR LINE	FFL
FIRE EXTINGUISHER	FE
G	
GAGE OR GAUGE	GA
GALVANIZED	GALV
GALVANIZED IRON	GI
GAS	G
GRID LINE	GL
GLAZED WALL TILE	GWT
GRADE	GR
GROUND	GND
GROUND CLEANOUT	GCO
GYPSUM	GYP
GYPSUM WALLBOARD	GYP BD (GWB)
H	
HANDRAIL	HDR
HARDBOARD	HBD
HARDWARE	HDW (HW)
HEAD	HD
HEATER	HTR
HEIGHT	HT (HGT)
HIGH POINT	H.PT.
HOLLOW METAL	HM
HORIZONTAL	HORIZ
HOSE BIBB	HB
I	
INSIDE DIAMETER	I.D.
INSULATION	INSUL.
INTERIOR	INT (INTR)
J	
JANITOR	JAN
JOINT	JT
JOIST	JST
K	
KEY LOCK	KL
KICK PLATE	KP
L	
LABORATORY	LAB
LAMINATE	LAM
LAVATORY	LAV
LIGHT	LT
LIGHTING	LTG
LOW POINT	LP
LUMBER	LBR
LOUVER	LVR
M	
MACHINE	MACH
MAINTENANCE	MAINT
MASONRY OPENING	MO
MASONRY UNIT	MU
MASTIC	MSTC
MATERIAL	MATL
MAXIMUM	MAX
MECHANICAL	MECH
METAL	MET
METAL BUILDING MANUFACTURER	MBM
MINIMUM	MIN
MIRROR	MIR
MISCELLANEOUS	MISC
MONOLITHIC	MONO
N	
NORTH	N
NOT IN CONTRACT	NIC
NUMBER	NO. (#)
NOT TO SCALE	NTS
O	
OFFICE	OFF.
ON CENTER	OC
OPENING	OPNG
OPPOSITE	OPP
OUTSIDE DIAMETER	O.D.
P	
PANEL	PNL
PAPER TOWEL DISPENSER	PTD
PAPER TOWEL DISPENSER & RECEPTACLE	PTD/R
PAPER TOWEL RECEPTACLE	PTR
PARTITION	PRTN
PLASTER	PLAST
PLATE	PL OR P
PLUMBING	PLBG
PLYWOOD	PLY WD
PRECAST	PRCST
Q	
QUARRY TILE	Q.T.
QUARTERS	QTRS
R	
RADIUS	RAD
RECEPTACLE	RECP
REFERENCE	REF
REFRIGERATOR	REFR
REINFORCEMENT	REINF
REQUIRED	REQD
REVISIONS	REV
RISER	R
ROOFING	RFG
ROOM	RM
ROUGH	RGH
S	
SANITARY NAPKIN DISPENSER	SND
SANITARY NAPKIN RECEPTACLE	SNR
SCHEDULE	SCH
SEAT COVER DISPENSER	SCD
SERVICE SINK	SSK
SHEATHING	SHTHG
SHEET	SHT.
SHEET METAL	SHT. MET.
SHOWER	SHR
SIMILAR	SIM
SOAP DISPENSER	SD
SOLID CORE	SC
SOUTH	S
SPEAKER	SPKR
SPECIFICATION	SPEC
SPLASH BLOCK	SB
SQUARE	SQ OR ⧈
STANDARD	STD
STEEL	STL
STORAGE	STOR
STRUCTURAL	STRL
SUSPENDED	SUSP
SYMMETRICAL	SYM
T	
TELEPHONE	TEL
TEMPERATURE	TEMP
TEMPERED GLASS	T
TERRAZZO	TER
THICK	THK
TOILET PAPER DISPENSER	TPD
TOP OF CONCRETE	TOC
TOP OF CURB	TC
TOP OF PAVEMENT	TP
TOP OF STEEL	TOS
TOP OF WALL	TW
TOPOGRAPHY	TOPO
TYPICAL	TYP
U	
UNLESS OTHERWISE NOTED	UON
URINAL	UR
V	
VENTILATOR	VENT
VENT THRU ROOF	VTR
VERTICAL	VERT
VESTIBULE	VEST
W	
WATER CLOSET	WC
WEIGHT	WT
WELDED WIRE FABRIC	WWF
WINDOW	W/
WITH	W/
WITHOUT	W/O
WOOD	WD

SYMBOLS

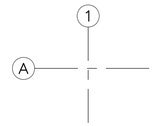

GRID LINES

DETAIL

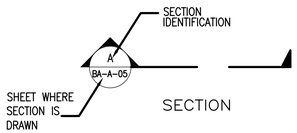

SECTION

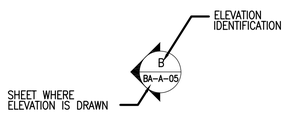

EXTERIOR ELEVATION

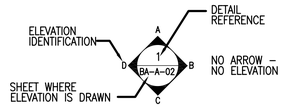

INTERIOR ELEVATION

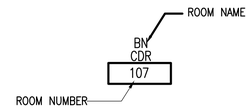

ROOM IDENTIFICATION

DOOR NUMBER

WINDOW NUMBER

LOUVER NUMBER

MATERIAL LEGEND

CONCRETE

CONCRETE MASONRY UNIT (CMU)

SAND, MORTAR

METAL STUD WALL

WOOD – FRAMING

WOOD BLOCKING

METAL

INSULATION, BATT

GYPSUM BOARD

WOOD – FINISH

GENERAL NOTES:

UNLESS OTHERWISE NOTED, LINEAR DIMENSIONS SHOWN ARE IN MILLIMETERS.

SYMBOL	DESCRIPTION	DATE	APP.

Designed By: R. BROWN
Date: 10 MAY 2007
Drawn By: D. GRIFFIN
File No. AF0707
Checked By: R. BROWN
I.S.O. Sheet File Name: A0707CB-AB01.dwg
B. THOMAS
Solicitation Number: –

US Army Corps of Engineers Transatlantic Programs Center

ANA REGIONAL BRIGADE
PAKTIKA, AFGHANISTAN
INTERPRETER FACILITIES
MWR
ABBREVIATIONS & SYMBOLS
–

SHEET REFERENCE NUMBER:
CB–A–00

$DATE$
$FILE$

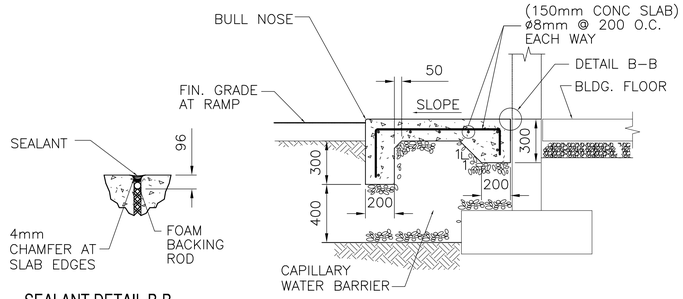

SEALANT DETAIL B-B

SECTION A-A

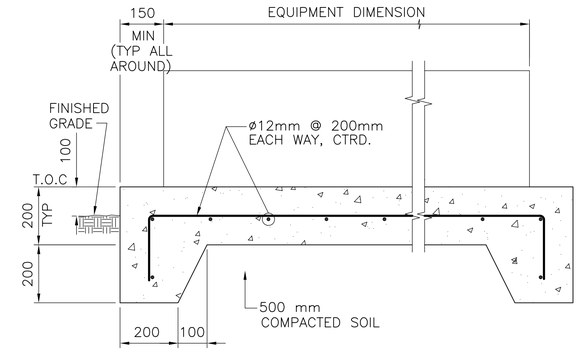

TYPICAL ALL AROUND PERIMETER

NOTE:
PAD DIMENSIONS, ANCHOR BOLT SIZE AND LOCATIONS, AND OTHER EMBEDDED ITEMS SHALL CONFORM TO EQUIPMENT MANUFACTURER'S REQUIREMENTS.

2 CONCRETE PAD FOR EXTERIOR EQUIPMENT

CB–SS–04 REF. SCALE: 1:10

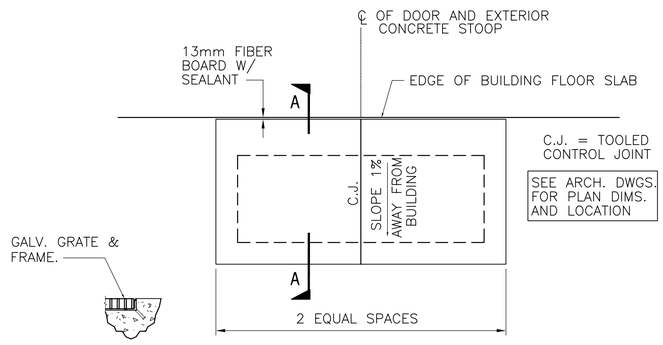

DETAIL D-D

EXTERIOR STOOPS

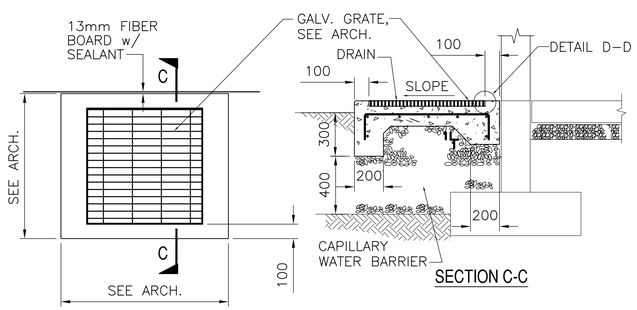

SECTION C-C

EXTERIOR STOOPS w/ GALVANIZED GRATE

1 CONCRETE STOOP/RAMP DETAILS

CB–SS–04 REF. SCALE: 1:20

200 0 200mm
SCALE: 1 = 10

UNLESS OTHERWISE NOTED, LINEAR DIMENSIONS SHOWN ARE IN MILLIMETERS.

SYMBOL	DESCRIPTION	DATE	APPR.

Designed By: D. SMITH
Drawn By: D. SMITH
Checked By: M. THOMPSON
Date: 10 MAY 2007
File No. AF0707
F.S.O. Sheet File Name: AF0707CB–SS04DT.DWG
Solicitation Number: –

US Army Corps of Engineers Transatlantic Programs Center

ANA REGIONAL BRIGADE
PAKTIKA, AFGHANISTAN
INTERPRETER FACILITIES
MWR

MISCELLANEOUS EXTERIOR CONCRETE PAD DETIALS

SHEET REFERENCE NUMBER:
CB–SS–04

$DATE$
$FILE$

D SIZE BORDER
32 X 20.5

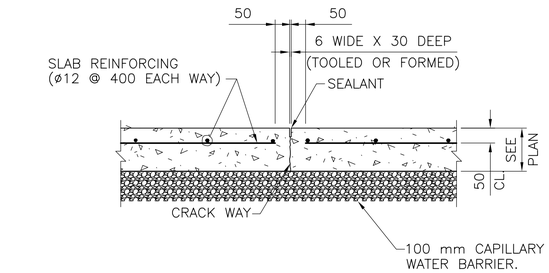

1 SLAB ON GRADE OR PAVEMENT CONTROL JOINT

CC-SS-03 REF. SCALE: 1:10

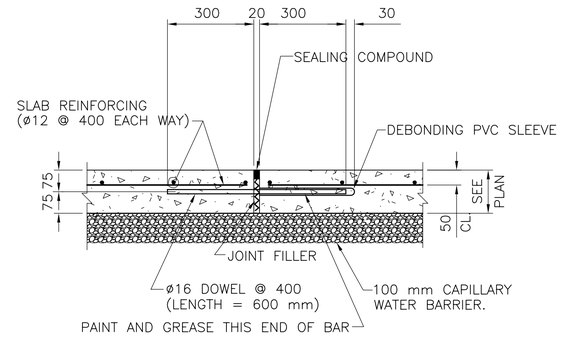

2 PAVEMENT EXPANSION JOINT

CC-SS-03 REF. SCALE: 1:10

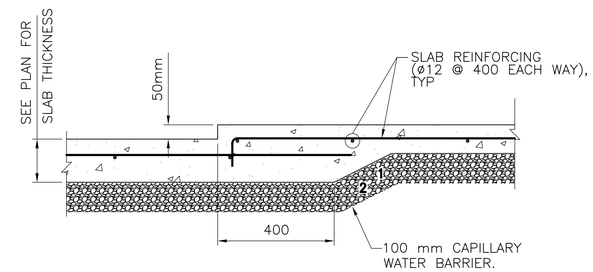

3 DEPRESSED SLAB DETAIL

CC-SS-03 REF. SCALE: 1:10

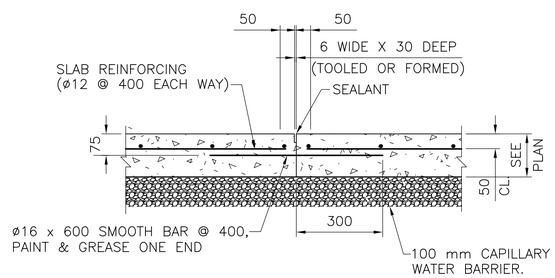

4 SLAB ON GRADE OR PAVEMENT CONSTRUCTION JOINT

CC-SS-03 REF. SCALE: 1:10

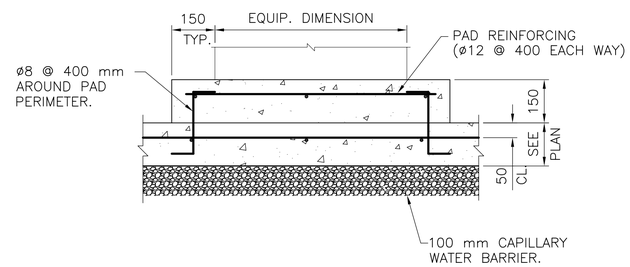

5 INTERIOR EQUIPMENT PAD DETAIL

CC-SS-03 REF. SCALE: 1:10

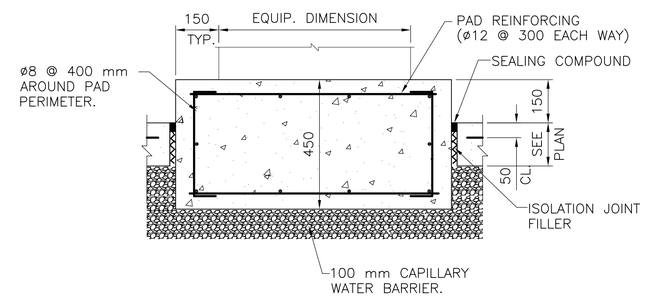

6 LARGE EQUIPMENT ISOLATION PAD DETAIL

CC-SS-03 REF. SCALE: 1:10

200 0 200mm
SCALE: 1 = 10

UNLESS OTHERWISE NOTED, LINEAR DIMENSIONS SHOWN ARE IN MILLIMETERS.

SYMBOL	DESCRIPTION	DATE	APP

Designed By: D. SMITH
Date: 10 MAY 2007
Drawn By: D. SMITH
File No. AF0707
Checked By: M. THOMPSON
I.S.O. Sheet File Name: AF0707CC-SS03DT.DWG
Solicitation Number: -

US Army Corps of Engineers Transatlantic Programs Center

ANA REGIONAL BRIGADE
PAKTIKA, AFGHANISTAN
EMBEDDED TRAINING FACILITY
STORAGE BUILDING

TYPICAL SLAB ON GRADE DETAILS

SHEET REFERENCE NUMBER:
CC-SS-03

$DATE$
$FILE$

D SIZE BORDER
32 X 20.5

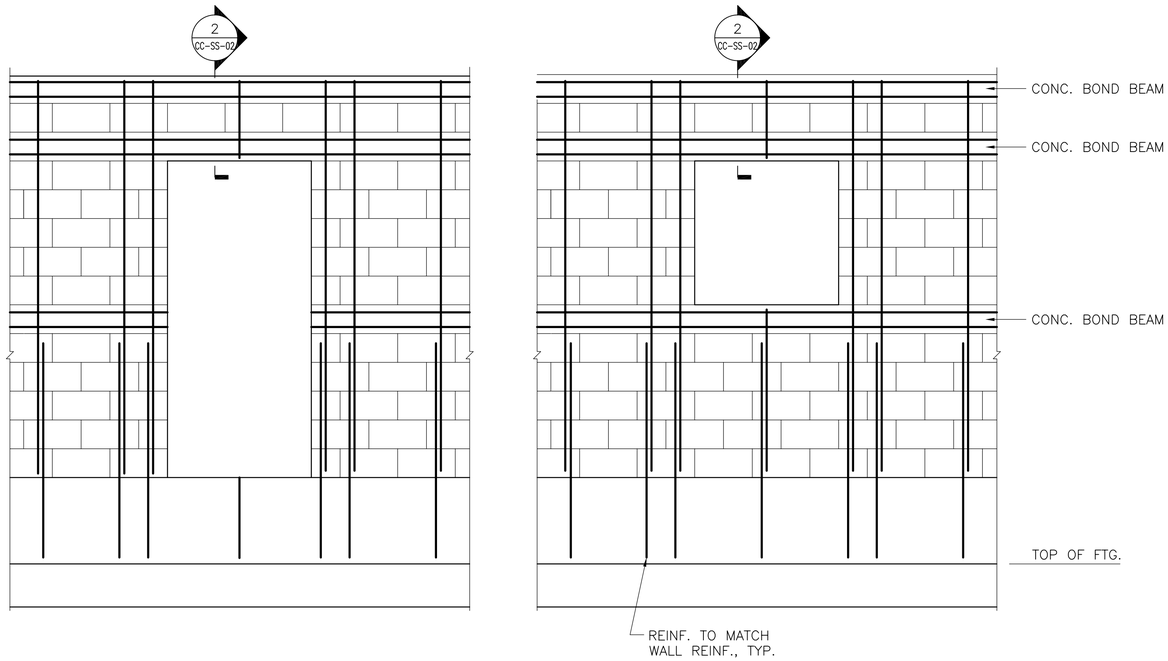

1 | CMU WALL PARTIAL ELEVATION

CC-SS-02 | REF. | SCALE: 1:20

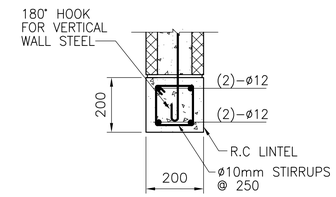

2 | LINTEL SECTION

CC-SS-02 | REF. | SCALE: 1:10

200 0 200mm
SCALE: 1 = 10

UNLESS OTHERWISE NOTED, LINEAR DIMENSIONS SHOWN ARE IN MILLIMETERS.

SYMBOL	DESCRIPTION	DATE	APP

Designed By: D. SMITH
Drawn By: D. SMITH
Checked By: M. THOMPSON
Date: 10 MAY 2007
File No. AF0707
I.S.O. Sheet File Name: AF0707CC-SS02DT.DWG
Solicitation Number: -

US Army Corps of Engineers Transatlantic Programs Center

ANA REGIONAL BRIGADE
PAKTIKA, AFGHANISTAN
EMBEDDED TRAINING FACILITY
STORAGE BUILDING

TYPICAL MASONRY DETAILS

SHEET REFERENCE NUMBER:
CC-SS-02

$DATE$
$FILE$

D SIZE BORDER
32 X 20.5

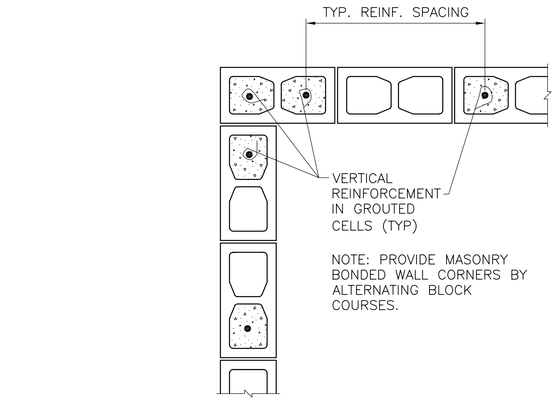

1 TYPICAL CMU CORNER WALL REINFORCING DETAIL

CC-SS-01 | REF. | SCALE: 1:10

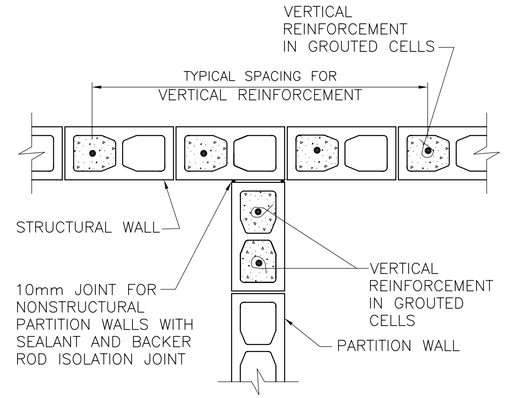

2 TYPICAL CMU PARTITION WALL REINFORCING DETAIL

CC-SS-01 | REF. | SCALE: 1:10

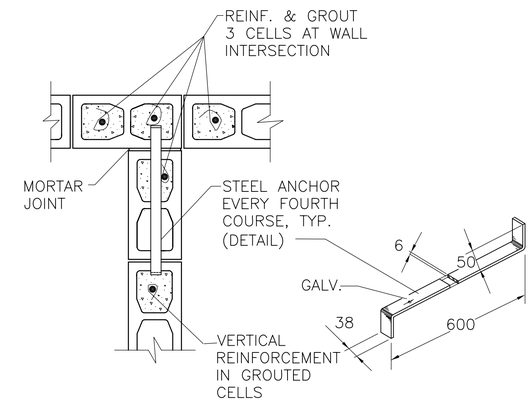

3 TYPICAL CMU STRUCTURAL WALL REINFORCING DETAIL

CC-SS-01 | REF. | SCALE: 1:10

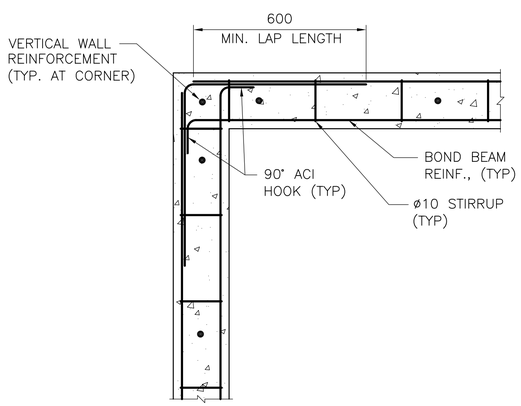

4 TYPICAL CIP CONCRETE BOND BEAM REINFORCING DETAIL

CC-SS-01 | REF. | SCALE: 1:10

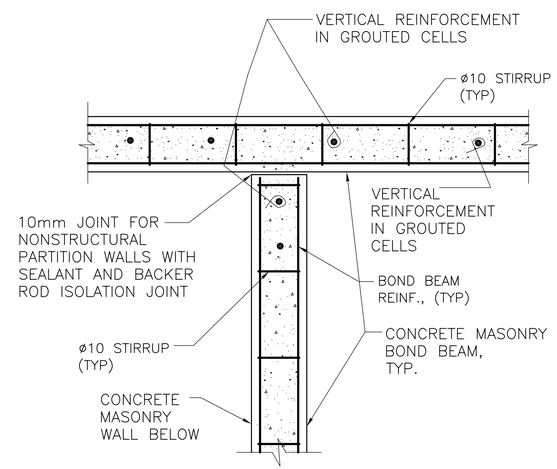

5 TYPICAL CIP CONCRETE BOND BEAM REINFORCING DETAIL

CC-SS-01 | REF. | SCALE: 1:10

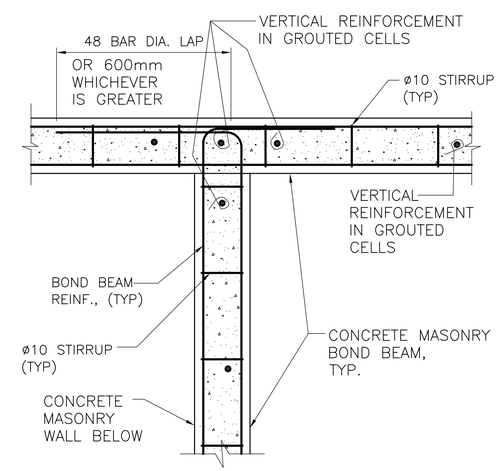

6 TYPICAL CIP CONCRETE BOND BEAM REINFORCING DETAIL

CC-SS-01 | REF. | SCALE: 1:10

200 0 200mm
SCALE: 1 = 10

UNLESS OTHERWISE NOTED, LINEAR DIMENSIONS SHOWN ARE IN MILLIMETERS.

SYMBOL	DESCRIPTION	DATE	APP

Designed By: D. SMITH
Drawn By: D. SMITH
Checked By: M. THOMPSON
Date: 10 MAY 2007
File No. AF0707
I.S.O. Sheet File Name: AF0707CC-SS01DT.DWG
Solicitation Number: -

US Army Corps of Engineers Transatlantic Programs Center

ANA REGIONAL BRIGADE
PAKTIKA, AFGHANISTAN
EMBEDDED TRAINING FACILITY
STORAGE BUILDING

TYPICAL MASONRY DETAILS

SHEET REFERENCE NUMBER:
CC-SS-01

$DATE$
$FILE$

D SIZE BORDER
32 X 20.5

GENERAL:

1. CONTRACTOR SHALL VERIFY ALL DIMENSIONS AND CONDITIONS AFFECTING THE WORK AT JOBSITE.

2. ALL STRUCTURAL WORK AND MATERIALS SHALL CONFORM TO THE REQUIREMENTS OF THE PROJECT SPECIFICATIONS.

3. FOR LOCATION AND DIMENSIONS OF GROOVES, REGLETS, SLEEVES, OPENINGS, AND EMBEDDED OR ATTACHED ITEMS, REFER TO ARCHITECTURAL, MECHANICAL, ELECTRICAL, AND PIPING DRAWINGS.

CODES:

1. ALL PARTS SHALL BE FURNISHED AND ERECTED ACCORDING TO THE APPLICABLE CODES AND SPECIFICATIONS OF THE FOLLOWING:

AMERICAN CONCRETE INSTITUTE	(ACI)
AMERICAN INSTITUTE OF STEEL CONSTRUCTION	(AISC)
AMERICAN IRON AND STEEL INSTITUTE	(AISI)
AMERICAN WELDING SOCIETY	(AWS)
MINIMUM DESIGN LOADS FOR BUILDINGS AND OTHER STRUCTURES	(ASCE)
INTERNATIONAL BUILDING CODE	(IBC)

DESIGN LOADS:

1. ROOF LOADING

A. LIVE LOAD 100 KG/SQ METER (20 PSF)
B. SNOW LOAD 75 KG/SQ METER (15 PSF)
C. COLLATERAL LOAD 50 KG/SQ METER (10 PSF)

2. WIND LOADING

A. BASIC WIND SPEED 145 KM/HR (90 MPH)
B. EXPOSURE CATEGORY "B"
C. IMPORTANCE FACTOR, Iw = 1.00
D. BUILDING CATEGORY "II"
E. MAX. FRAME DRIFT DUE TO 10-YEAR WIND = H/200

3. SEISMIC LOADING:

A. Ss = 1.28g
B. S1 = 0.51g
C. SEISMIC USE GROUP "I"
D. SITE CLASSIFICATION "D"
E. IMPORTANCE FACTOR I = 1.0

BASIC SEISMIC FORCE RESISTING SYSTEM:

CANTILEVER CMU WALL SYSTEM WITH INTERMEDIATE STEEL MOMENT FRAMES

DESIGN BASE SHEAR: 0.34W FOR CMU CANTILEVER WALLS.
0.19W FOR INTERMEDIATE STEEL MOMENT FRAMES.

ANALYSIS PROCEDURE: EQUIVALENT LATERAL FORCE METHOD

FOUNDATIONS:

1. ALL FOOTINGS SHALL BEAR ON SOIL CAPABLE OF SUSTAINING THE LOADS.

2. CONTINUOUS WALL FOOTINGS WERE DESIGNED FOR A SOIL BEARING CAPACITY OF 9765 KG/SQ. METER (2000 PSF). ISOLATED COLUMN FOOTINGS WERE DESIGNED FOR A MAXIMUM BEARING CAPACITY OF 9765 KG/SQ. METER (2000 PSF).

3. ELEVATIONS SHOWN ON PLANS FOR TOP OF FOOTINGS ARE MINIMUM DEPTH. DIFFERENT OR UNUSUAL CONDITIONS SHALL BE REPORTED TO THE CONTRACTING OFFICER.

4. ALL FOOTING REINFORCEMENT SHALL BE SECURELY SUPPORTED ABOVE GROUND. CONCRETE BLOCK AND BROKEN TILE SHALL NOT BE USED. CONCRETE OR CLAY BRICK MAY BE USED.

CONCRETE:

1. STRUCTURAL CONCRETE FOR THE BUILDING STRUCTURE SHALL HAVE THE FOLLOWING PROPERTIES:

FOOTINGS: f'c = 210 KG/SQ. CM (3,000 PSI) AT 28 DAYS
SLABS: f'c = 210 KG/SQ. CM (3,000 PSI) AT 28 DAYS

2. ALL REINFORCING STEEL SHALL BE DEFORMED BARS CONFORMING TO ASTM A615 GRADE 60 UNLESS NOTED OTHERWISE.

3. LOCATION OF ALL CONCRETE JOINTS, OTHER THAN THOSE SPECIFIED, SHALL BE APPROVED BY THE CONTRACTING OFFICER BEFORE CONCRETE PLACEMENT.

4. MINIMUM PROTECTIVE COVER OF REINFORCEMENT (SEE DETAILS) SHALL BE AS FOLLOWS:

FOOTINGS, 75mm CLEAR BOTTOM AND SIDES, 40mm CLEAR TOP.
CONCRETE SLABS-ON-GRADE, 25mm CLEAR TOP.
WALLS, 40mm CLEAR SIDES.
CONCRETE PIERS, 40mm CLEAR TO TIES.

5. MINIMUM CONCRETE SPLICES AND HOOKS FOR REINFORCING STEEL SHALL CONFORM TO ACI 318, CURRENT EDITION.

6. CONCRETE WORK SHALL BE COORDINATED WITH DRAINS, UNDERGROUND UTILITIES, MECHANICAL, ELECTRICAL, AND ARCHITECTURAL PLANS. CONCRETE SHALL NOT BE CAST UNTIL THESE ITEMS HAVE BEEN INSTALLED AND ACCEPTED.

7. CONCRETE FINISHES SHALL BE PROVIDED AS DESCRIBED IN THE SPECIFICATIONS.

8. CORNER BARS SHALL BE PROVIDED AT ALL INTERSECTIONS; BAR SIZE AND SPACING TO MATCH LARGER BAR.

9. SLABS ON GRADE SHALL BE REINFORCED AT ALL PENETRATIONS AND RE-ENTRANT CORNERS. PLACE 3-ø10 x 1.0 METER AROUND FLOOR DRAINS. PLACE 2-ø12 x 1.0 METER (MINIMUM) AT RE-ENTRANT CORNERS.

STRUCTURAL STEEL:

1. STRUCTURAL STEEL SHALL BE FABRICATED AND ERECTED IN ACCORDANCE WITH THE AMERICAN INSTITUTE OF STEEL CONSTRUCTION, "SPECIFICATION FOR STRUCTURAL STEEL BUILDINGS", 1989 (AISC ASD MANUAL, 9TH EDITION).

2. STEEL SHALL CONFORM TO THE FOLLOWING REQUIREMENTS UNLESS NOTED OTHERWISE:

MISCELLANEOUS PLATES AND ANGLES - ASTM A36 (Fy = 36 KSI)
RECTANGULAR HSS - ASTM A500, GRADE B (Fy = 46 KSI)
"W" SHAPES - ASTM A992

3. NO STRUCTURAL STEEL SHALL BE FABRICATED OR ERECTED UNTIL SHOP DRAWINGS HAVE BEEN APPROVED.

4. NO HOLES OTHER THAN THOSE SPECIFICALLY DETAILED SHALL BE ALLOWED THROUGH STRUCTURAL STEEL MEMBERS. CUTTING OF STEEL SHALL NOT BE PERMITTED WITHOUT APPROVAL OF THE CONTRACTING OFFICER.

5. THE CONTRACTOR SHALL VERIFY ALL SHOP DRAWING DIMENSIONS WITH THE STRUCTURAL AND ARCHITECTURAL PLANS AND DETAILS, AND WITH FIELD DIMENSIONS OF COLUMN LAYOUT.

7. BOLTED CONNECTIONS SHALL BE MADE WITH HIGH STRENGTH BOLTS CONFORMING TO ASTM A325, 20mm DIAMETER MINIMUM UNLESS NOTED OTHERWISE.

8. CONNECTIONS NOT SHOWN ON DRAWINGS SHALL BE DESIGNED BY THE FABRICATOR. CONNECTIONS SHALL BE SELECTED TO SUPPORT ONE HALF THE TOTAL UNIFORM LOAD CAPACITY SHOWN IN THE ALLOWABLE LOAD TABLES, PART 2 OF LATEST AISC MANUAL FOR THE GIVEN BEAM, SPAN, AND GRADE OF STEEL SPECIFIED. WHERE POSSIBLE, DOUBLE ANGLE CONNECTIONS SHALL BE USED.

MASONRY:

1. ENGINEERED MASONRY IS DESIGNED IN ACCORDANCE WITH "BUILDING CODE REQUIREMENTS FOR MASONRY STRUCTURES" (ACI 530-99/ ASCE 5-99/TMS 402-99).

2. UNITS: ASTM C90, TYPE (I) (NORMAL WEIGHT, MOISTURE CONTROLLED) (OR EQUIVALENT DIN, ACI OR EN STANDARDS) MORTAR: ASTM C270 TYPE S (OR EQUIVALENT DIN, ACI OR EN STANDARDS)

3. FULLY GROUT ALL CELLS CONTAINING REINFORCING STEEL OR ANCHORS UNLESS NOTRED OTHERWISE.

4. USE 50 db FULL CONTACT LAP SPLICES FOR REINFORCING STEEL IN CMU WALLS UNLESS NOTED OTHERWISE.

5. SEE SPECIFICATION 04200 FOR MASONRY BLOCK. ALL VERTICAL CELLS OF MASONRY BLOCK WITH REINFORCING SHALL BE GROUTED SOLID TO FORM A COMPOSITE MASONRY AND STEEL ASSEMBLY.

6. PROVIDE AN ADDITIONAL VERTICAL REINFORCEMENT AT EACH SIDE OF INTERSECTION OF EXTERIOR WALLS, AND AT EACH SIDE OF ALL MASONRY OPENINGS GREATER THAN 250mm IN WIDTH. IN OPENINGS WIDER THAN 600mm, PROVIDE ADDITIONAL VERTICAL REINFORCEMENT IN TWO ADJACENT CELLS ON EACH SIDE OF THE OPENING. ADDED VERTICAL REINFORCEMENT SHALL BE CONTINUOUS FOR THE FULL HEIGHT OF WALL.

7. PROVIDE BOND BEAMS AT 1200mm MAXIMUM VERTICAL SPACING

8. PROVIDE LINTEL ABOVE ALL MASONRY OPENINGS AS SHOWN IN DETAIL 3/SS-02.

9. PROVIDE A BOND BEAM BELOW ALL MASONRY OPENINGS AND EXTEND A MINIMUM OF 400mm BEYOND EACH SIDE OF OPENING.

200 0 200mm
SCALE: 1 = 10

UNLESS OTHERWISE NOTED, LINEAR DIMENSIONS SHOWN ARE IN MILLIMETERS.

SYMBOL	DESCRIPTION	DATE	APP

Designed By: D. SMITH
Date: 10 MAY 2007
Drawn By: D. SMITH
File No. AF0707
Checked By: M. THOMPSON
I.S.O. Sheet File Name: AF0707CC-SS00DT.DWG
Solicitation Number: -

US Army Corps of Engineers
Transatlantic Programs Center

ANA REGIONAL BRIGADE
PAKTIKA, AFGHANISTAN
EMBEDDED TRAINING FACILITY
STORAGE BUILDING

TYPICAL MASONRY DETAILS

SHEET REFERENCE NUMBER:
CC-SS-00

$DATE$
$FILE$

D SIZE BORDER
32 X 20.5

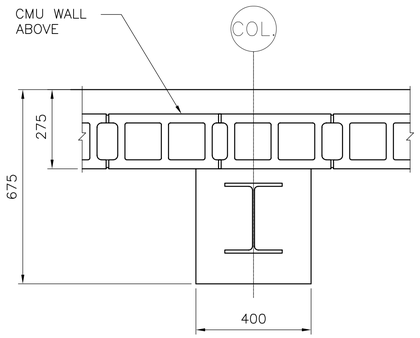

(SLAB LEVEL)

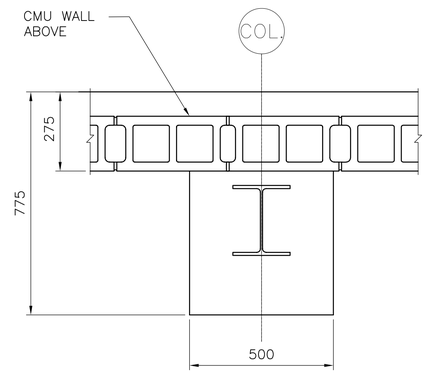

(SLAB LEVEL)

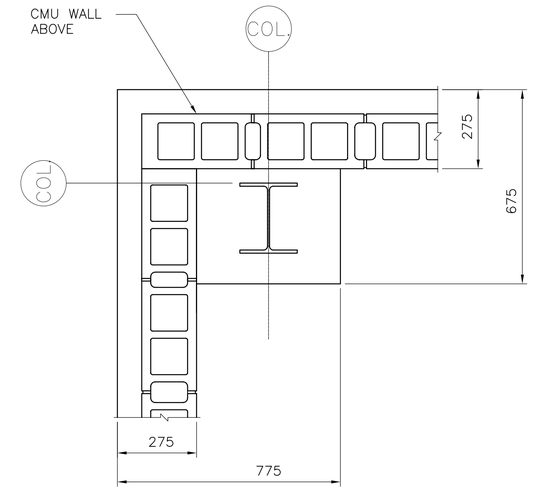

(SLAB LEVEL)

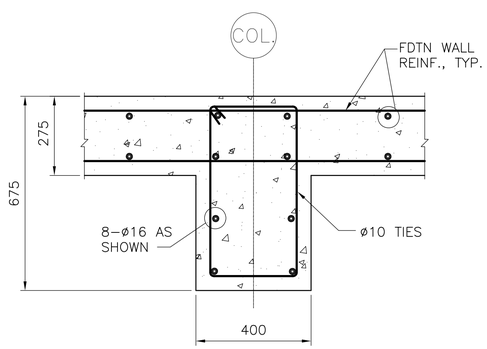

(FOUNDATION LEVEL)

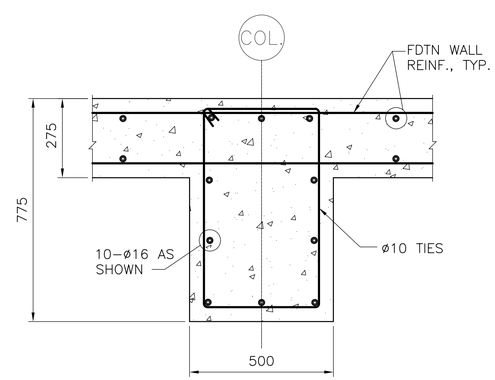

(FOUNDATION LEVEL)

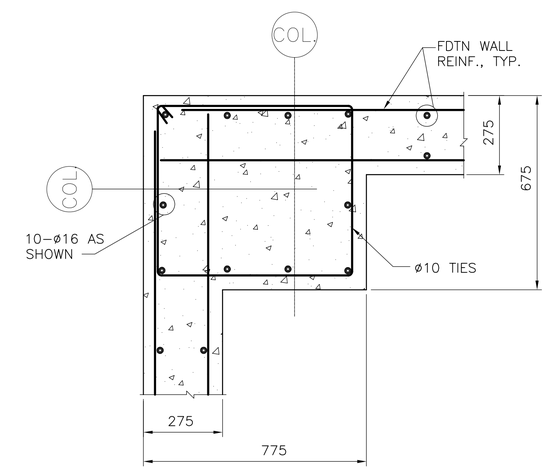

(FOUNDATION LEVEL)

- PEDESTAL P1

CC–S–01 REF. SCALE: 1:10

- PEDESTAL P2

CC–S–01 REF. SCALE: 1:10

- PEDESTAL P3

CC–S–01 REF. SCALE: 1:10

200 0 200mm
SCALE: 1 = 10

UNLESS OTHERWISE NOTED, LINEAR DIMENSIONS SHOWN ARE IN MILLIMETERS.

SYMBOL	DESCRIPTION	DATE	APP

Designed By: M. THOMPSON
Drawn By: D. SMITH
Checked By: M. THOMPSON
Date: 10 MAY 2007
File No. AF0707
I.S.O. Sheet File Name: AF0707CC–SB04SE.DWG
Solicitation Number: –

US Army Corps of Engineers Transatlantic Programs Center

ANA REGIONAL BRIGADE
PAKTIKA, AFGHANISTAN
EMBEDDED TRAINING FACILITY
STORAGE BUILDING
COLUMN
PEDESTAL DETAILS

SHEET REFERENCE NUMBER:
CC–S–04

$DATE$
$FILE$

D SIZE BORDER
32 X 20.5

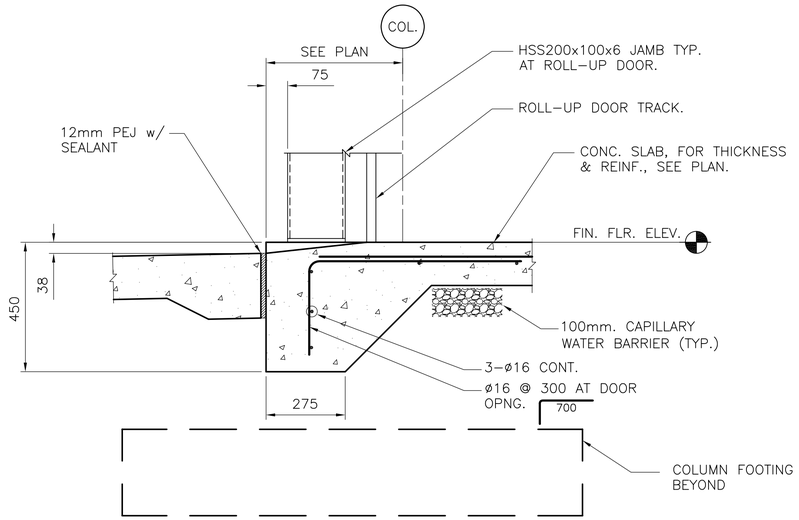

1 SECTION AT ROLL- UP DOOR

CC-S-01 REF. SCALE: 1:10

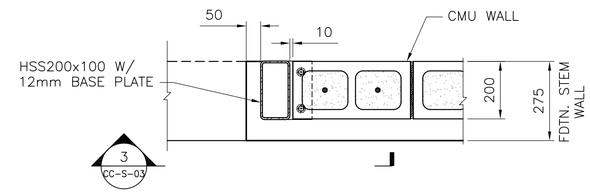

2 DETAIL AT ROLL- UP DOOR

CC-S-01 REF. SCALE: 1:10

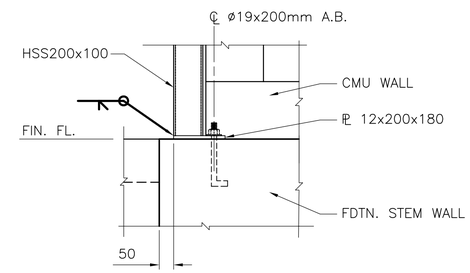

3 SECTION

CC-S-03 REF. SCALE: 1:10

200 0 200mm
SCALE: 1 = 10

UNLESS OTHERWISE NOTED, LINEAR DIMENSIONS SHOWN ARE IN MILLIMETERS.

SYMBOL	DESCRIPTION	DATE	APP

Designed By: D. SMITH
Drawn By: D. SMITH
Checked By: M. THOMPSON
Date: 10 MAY 2007
File No. AF0707
I.S.D. Sheet File Name: AF0707CC-SB03SE.DWG
Solicitation Number: -

US Army Corps of Engineers
Transatlantic Programs Center

ANA REGIONAL BRIGADE
PAKTIKA, AFGHANISTAN
EMBEDDED TRAINING FACILITY
STORAGE BUILDING

FOUNDATION SECTIONS

SHEET REFERENCE NUMBER:
CC-S-03

$DATE$
$FILE$

D SIZE BORDER
32 X 20.5

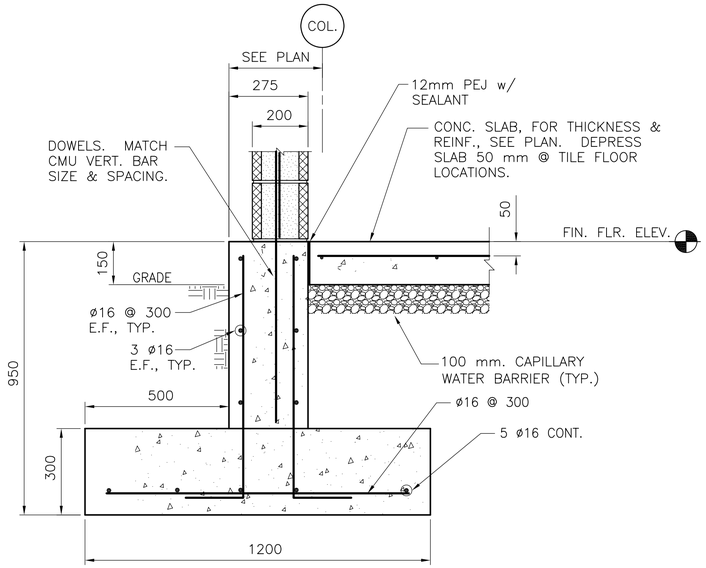

1 SECTION AT EXTERIOR CMU WALL

CC-S-01 REF. SCALE: 1:10

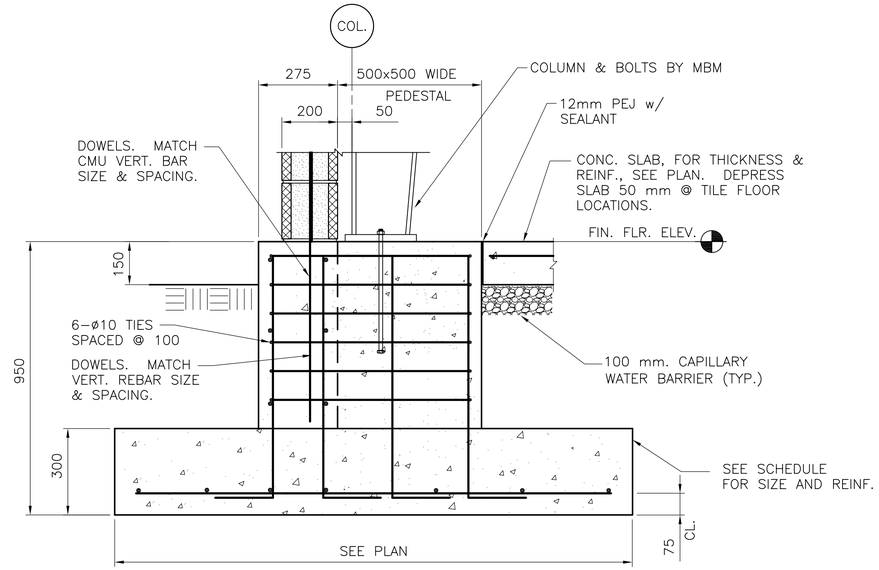

2 SECTION AT SIDEWALL COLUMN FOOTING

CC-S-01 REF. SCALE: 1:10

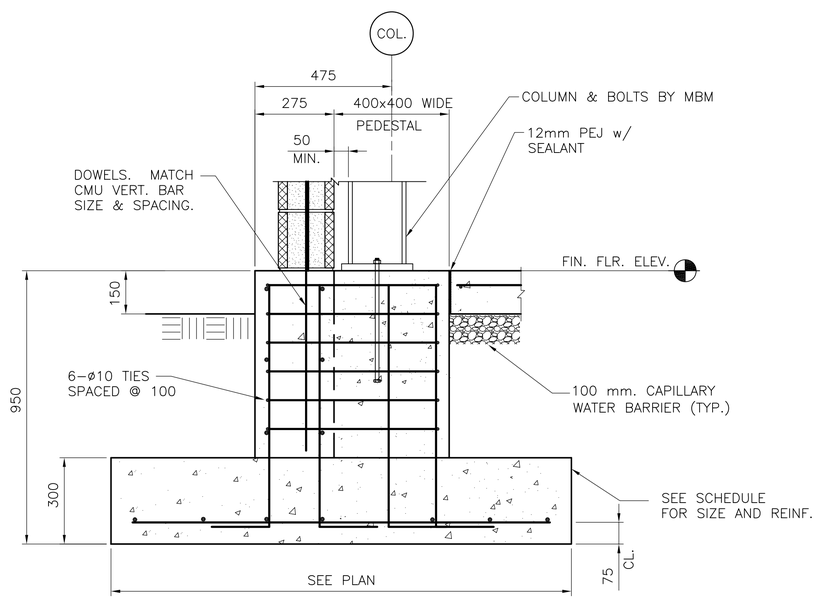

3 SECTION AT ENDWALL COLUMN FOOTING

CC-S-01 REF. SCALE: 1:10

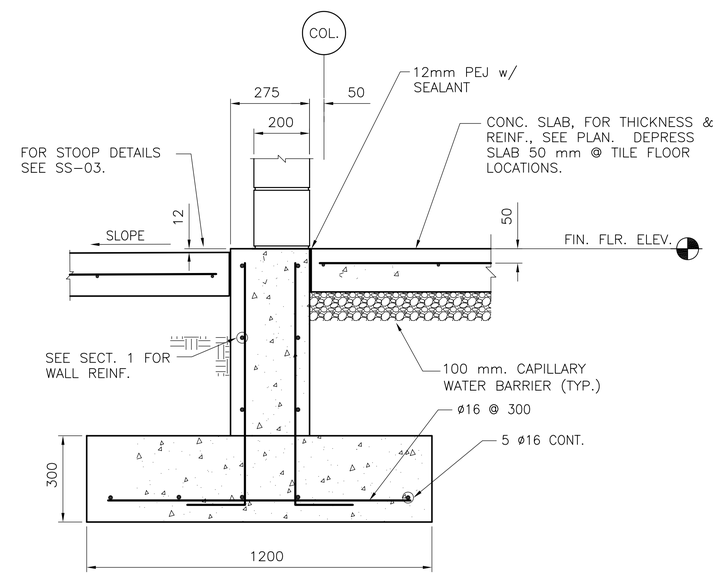

4 SECTION AT EXTERIOR DOOR

CC-S-01 REF. SCALE: 1:10

200 0 200mm
SCALE: 1 = 10

UNLESS OTHERWISE NOTED, LINEAR DIMENSIONS SHOWN ARE IN MILLIMETERS.

SYMBOL	DESCRIPTION	DATE	APP

Date: 10 MAY 2007
File No. AF0707
I.S.D. Sheet File Name: AF0707CC-SB02SE.DWG
Solicitation Number: -

Designed By: D. SMITH
Drawn By: D. SMITH
Checked By: M. THOMPSON

US Army Corps of Engineers Transatlantic Programs Center

ANA REGIONAL BRIGADE
PAKTIKA, AFGHANISTAN
EMBEDDED TRAINING FACILITY
STORAGE BUILDING

FOUNDATION SECTIONS

SHEET REFERENCE NUMBER:
CC-S-02

$DATE$
$FILE$

D SIZE BORDER
32 X 20.5

SHEET NOTES:

1. CONT. UPPER BOND BEAM 200x200 W/ 2–ø12 CONT BARS TOP & BOT.

2. CMU WALL REINFORCEMENT SHALL BE ø16 @ 600 U.N.O. GROUT VERTICAL CELLS WITH REINFORCEMENT.

3. TOP OF CMU WALL ELEVATION SHALL BE 2.8M A.F.F., UNLESS NOTED OTHERWISE.

4. REFER TO SHEET CC–SS–01 AND 02 FOR TYPICAL MASONRY DETAILS AND CONTROL JOINTS DETAILS.

5. REFER TO SHEET CC–SS–03 FOR TYPICAL SLAB JOINT DETAILS.

6. REFER TO SHEET CC–SS–03 FOR TYPICAL SLAB ON GRADE DETAILS.

7. REFER TO SHEET CC–SS–04 FOR TYPICAL EXTERIOR CONCRETE PAD DETAILS.

8. SLAB ON GRADE SHALL BE 150 MM CONCRETE ON A 100 MM CAPILLARY WATER BARRIER. SEE SHEET CC–SS–02 FOR TYPICAL SLAB REINFORCEMENT.

COLUMN FOOTING SCHEDULE

MARK	SIZE	REINFORCING	PEDESTAL MARK
F1	1000 x 1600 x 300mm	TRANSVERSE – 6 ø16 (B) LONGITUDINAL – 4 ø16 (B)	P1
F2	1500 x 1800 x 300mm	TRANSVERSE – 7 ø16 (B) LONGITUDINAL – 6 ø16 (B)	P2
F3	1600 x 1600 x 300mm	TRANSVERSE – 6 ø16 (B) LONGITUDINAL – 6 ø16 (B)	P3
F4	1200 x 1600 x 300mm	TRANSVERSE – 6 ø16 (B) LONGITUDINAL – 5 ø16 (B)	P1

NOTE: FOR PEDESTAL DETAILS AND REINFORCEMENT, SEE SHEET CC–S–04.

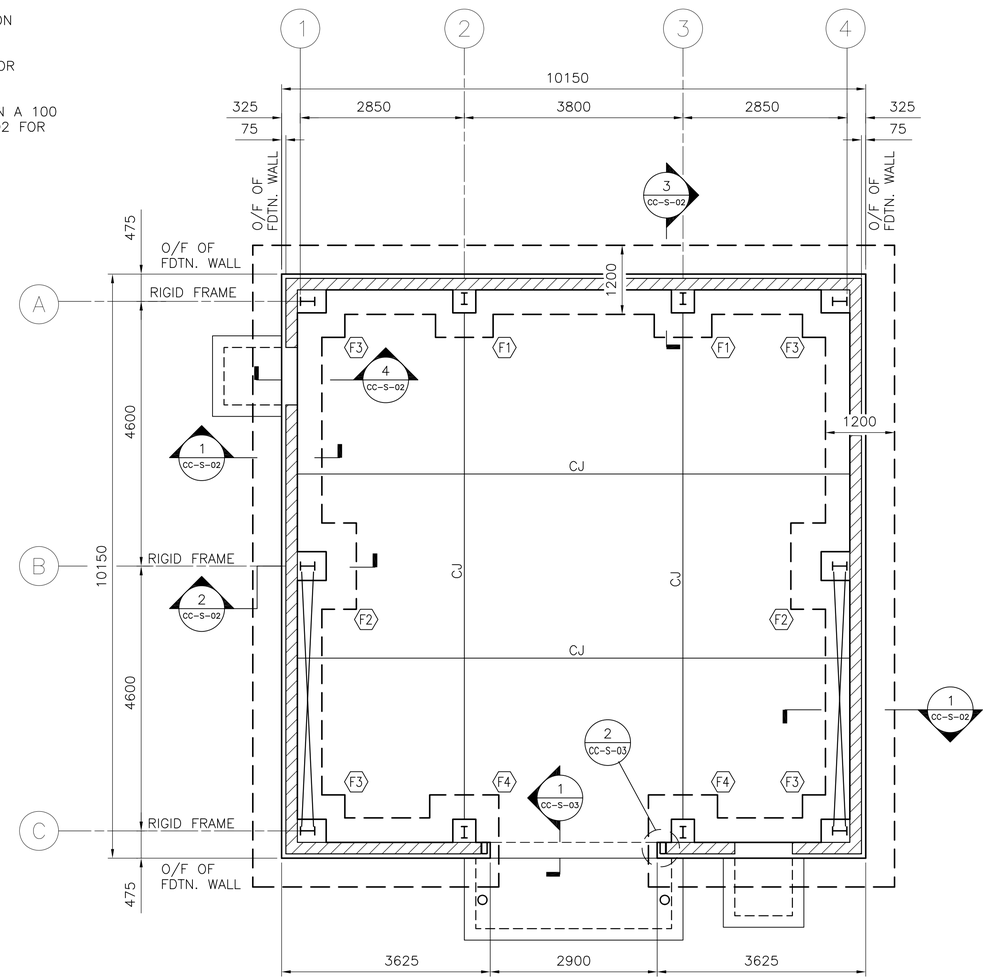

FOUNDATION PLAN

REF. SCALE: 1:50

PRE–ENGINEERED BUILDING DESIGN REQUIREMENTS:

1. THE DESIGN SHALL BE IN ACCORDANCE WITH THE 2003 INTERNATIONAL BUILDING CODE.

2. DESIGN LOADS SHALL BE AS STATED IN THE GENERAL NOTES.

3. COLUMN BASE PLATES HAVE BEEN ASSUMED AS "PINNED" FOR THE FOUNDATION SHOWN.

4. LONGITUDINAL BRACE LOCATIONS HAVE BEEN SHOWN AT THE PREFERRED LOCATIONS. COORDINATE BRACE LOCATIONS WITH MECHANICAL AND ELECTRICAL EQUIPMENT.

5. THE METAL BUILDING MANUFACTURER SHALL PROVIDE THE DESIGN, FABRICATION AND DELIVERY OF ALL BUILDING ANCHOR BOLTS. THE BUILDING MANUFACTURER SHALL PROVIDE SETTING TEMPLATES FOR ALL EMBEDDED ANCHOR BOLTS. ALL ANCHOR BOLTS SHALL BE THE "HEADED" TYPE, BENT "L" BOLTS WILL NOT BE ACCEPTABLE.

6. SUBMITTAL OF SHOP DRAWINGS AND DESIGN CALCULATIONS IS REQUIRED PRIOR TO FABRICATION.

LEGEND:

CANTILEVERED CMU WALL ON SPREAD FOOTING; TOW AT EL. 2800

1000 0 1000mm
SCALE: 1 = 50

UNLESS OTHERWISE NOTED, LINEAR DIMENSIONS SHOWN ARE IN MILLIMETERS.

SYMBOL	DESCRIPTION	DATE	APP

Designed By: D. SMITH
Date: 10 MAY 2007
Drawn By: A. PIERCE
File No. AF0707
Checked By: D. SMITH
I.S.O. Sheet File Name: AF0707CC–SB01PN.DWG
Solicitation Number: –

US Army Corps of Engineers Transatlantic Programs Center

ANA REGIONAL BRIGADE
PAKTIKA, AFGHANISTAN
EMBEDDED TRAINING FACILITY
STORAGE BUILDING

FOUNDATION PLAN

SHEET REFERENCE NUMBER:
CC–S–01

$DATE$
$FILE$

D SIZE BORDER
32 X 20.5

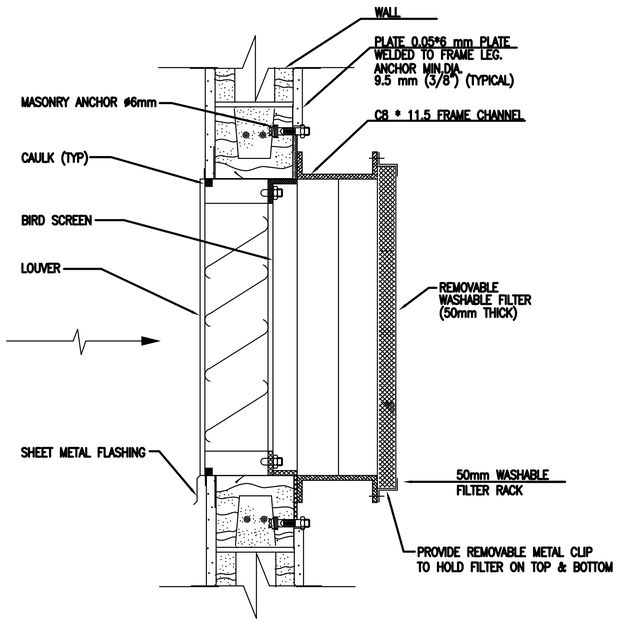

1 WASHABLE FILTER LOUVER DETAILS

SCALE: N.T.S

UNLESS OTHERWISE NOTED, LINEAR DIMENSIONS SHOWN ARE IN MILLIMETERS.

SYMBOL	DESCRIPTION	DATE	APP

Designed By:
Date: 10 MAY 2007
Drawn By:
File No. AF0707
Checked By:
I.S.O. Sheet File Name: AF0707CC-MH02DN.dwg
Solicitation Number: _

US Army Corps of Engineers Transatlantic Programs Center

ANA REGIONAL BRIGADE
PAKTIKA, AFGHANISTAN
EMBEDDED TRAINING FACILITY
STORAGE BUILDING
HVAC DETAILS
_ _

SHEET REFERENCE NUMBER:
CC-DM-01

$DATE$
$FILE$

D SIZE BORDER
32 X 20.5

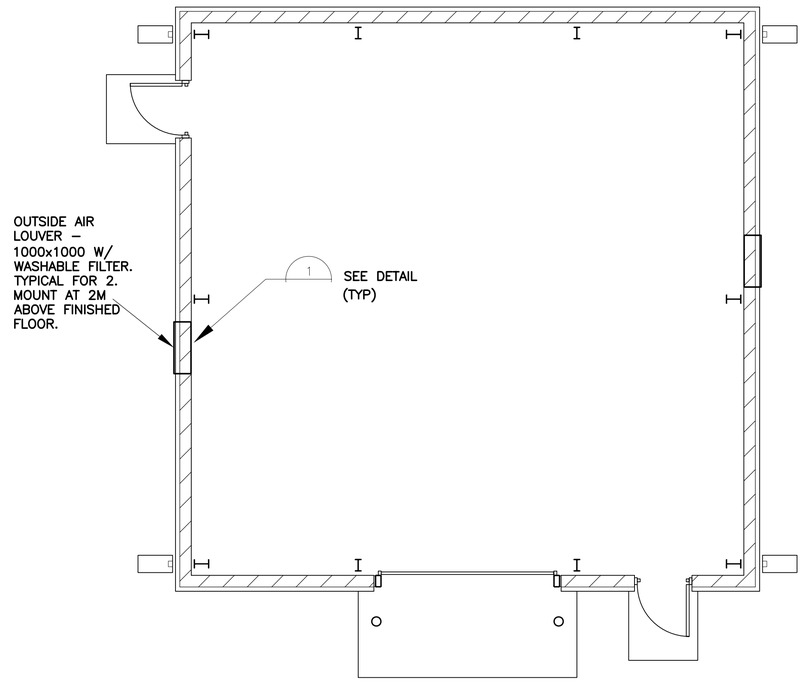

NOTES:

1– ALL DIMENSIONS ARE IN MM UNLESS OTHERWISE NOTED.

1 HVAC FLOOR PLAN

SCALE: 1:50

UNLESS OTHERWISE NOTED, LINEAR DIMENSIONS SHOWN ARE IN MILLIMETERS.

SYMBOL	DESCRIPTION	DATE	APP

Designed By:
Drawn By:
Checked By:
Date: 10 MAY 2007
File No. AF0707
I.S.O. Sheet File Name: AF0707CCMH01DPN.dwg
Solicitation Number: –

US Army Corps of Engineers Transatlantic Programs Center

ANA REGIONAL BRIGADE
PAKTIKA, AFGHANISTAN
EMBEDDED TRAINING FACILITY
STORAGE BUILDING
HVAC PLAN
– –

SHEET REFERENCE NUMBER:
CC–MH–01

$DATE$
$FILE$

D SIZE BORDER
32 X 20.5

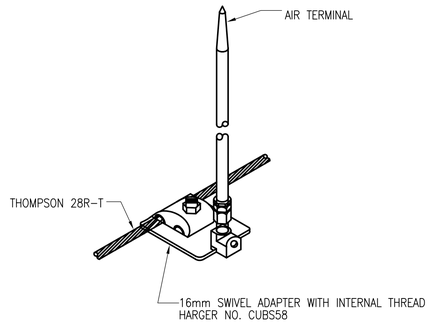

1 AIR TERMINAL MOUNTING DETAIL

SCALE: N.T.S

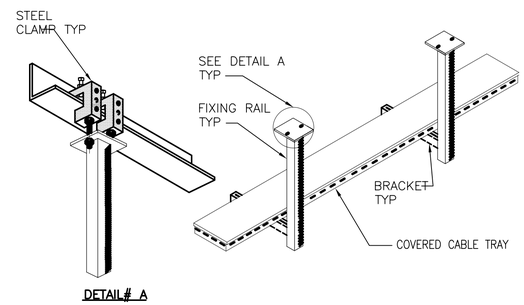

2 CABLE TRAY SUPPORT DETAIL

SCALE: N.T.S

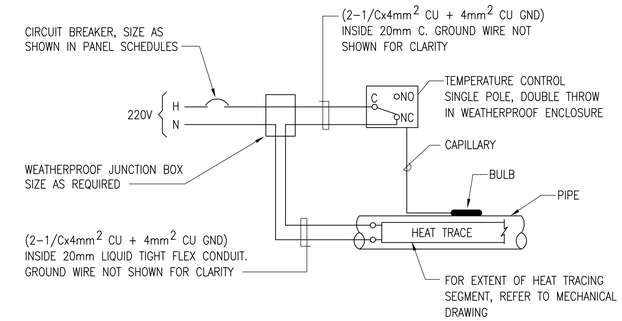

3 HEAT TRACE CONTROL DIAGRAM

SCALE: N.T.S

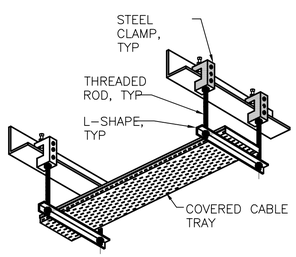

4 CABLE TRAY SUPPORT DETAIL

SCALE: N.T.S

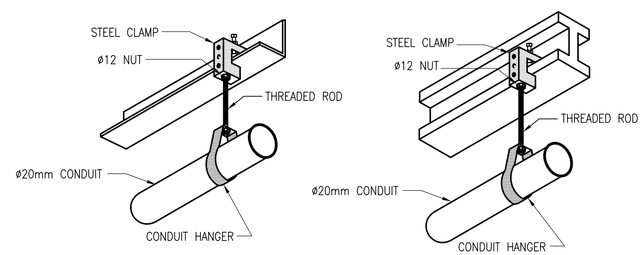

5 SUPPORT OF CONDUIT FROM STEEL STRUCTURE

SCALE: N.T.S

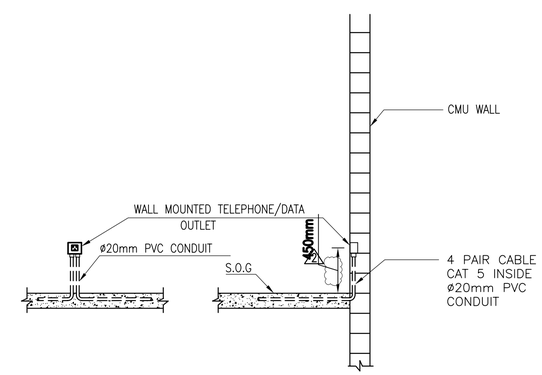

6 GENERAL INSTALLATION DETAIL FOR RECESSED TELEPHONE/ DATA OUTLET (CONDUIT EMBEDDED IN SLAB)

SCALE: N.T.S

UNLESS OTHERWISE NOTED, LINEAR DIMENSIONS SHOWN ARE IN MILLIMETERS.

SYMBOL	DESCRIPTION	DATE	APR

Designed By:
Drawn By:
Checked By:
Date: 10 MAY 2007
File No. AF0707
I.S.O. Sheet File Name: AF0707CC-EL03DT.dwg
Solicitation Number: -

US Army Corps of Engineers Transatlantic Programs Center

ANA REGIONAL BRIGADE
PAKTIKA, AFGHANISTAN
EMBEDDED TRAINING FACILITY
STORAGE BUILDING
ELECTRICAL
DETAILS

SHEET REFERENCE NUMBER:
CC-DE-03

$DATE$
$FILE$

LIGHTING FIXTURE SCHEDULE

TYPE	DESCRIPTION	NO. OF LAMPS	LAMP TYPE	WATTS PER LAMP	VOLTAGE	MOUNTING
A	PENDANT MOUNTED INDUSTRIAL FLUORESCENT LIGHT FIXTURE WITH WIDE DISTRIBUTION REFLECTOR KIT	2	T8	36	220/50HZ	PENDANT
A1	SURFACE MOUNTED INDUSTRIAL FLUORESCENT LIGHT FIXTURE WITH WIDE DISTRIBUTION REFLECTOR KIT	2	T8	36	220/50HZ	SURFACE
B	SURFACE/PENDANT MOUNTED PRISTMIC REFLECTOR	2	T8	36	220/50HZ	SURFACE/PENDENT
B1	SURFACE MOUNTED VIRTUALLY UNBREAKABLE DIFFUSER, SOLID STEEL BODY AND FRAME, HIGH SECURITY STAINLESS BOLTS	2	T8	36	220/50HZ	SURFACE/PENDENT
C	PENDANT MOUNTED FLUORESCENT LIGHT FIXTURE WITH REFLECTOR AND ACRYLIC LENS	4	T8	36	220/50HZ	PENDANT
C1	SURFACE MOUNTED FLUORESCENT LIGHT FIXTURE WITH REFLECTOR AND ACRYLIC LENS	4	T8	36	220/50HZ	SURFACE
D	SURFACE/PENDANT MOUNTED FIXTURE SPECIAL FOR WET LOCATION	2	T8	40	220/50HZ	SURFACE
E	SURFACE/WALL MOUNTED FIXTURE SPECIAL FOR WET LOCATION	2	T8	36	220/50HZ	SURFACE OR WALL
F	WALL MOUNTED COMPACT FLUOR.	1	CF	26	220/50HZ	WALL
G	PENDANT MOUNTED INDUSTRIAL LOW BAY FIXTURE	1	HPS	150	220/50HZ	PENDANT
G1	PENDANT MOUNTED INDUSTRIAL HIGH BAY FIXTURE	1	HPS	150	220/50HZ	PENDANT
G2	PENDANT MOUNTED INDUSTRIAL LOW BAY FIXTURE	1	HPS	250	220/50HZ	PENDANT
J	EXPLOSION PROOF SURFACE MOUNTED FLUOR. FIXTURE	2	INCLUDED	36	220/50HZ	SURFACE
X1	EXIT SIGN WITH DIRECTIONAL ARROWS AS REQUIRED	2	INCLUDED	8	220/50HZ	UNIVERSAL
X2	EMERGENCY FIXTURE WITH HALOGEN LAMPS	2	HALOGEN	20	220/50HZ	WALL/SURFACE
X3	EXPLOSION PROOF EMERGENCY FIXTURE WITH HALOGEN LAMPS	2	HALOGEN	14	220/50HZ	WALL/SURFACE

BRANCH CIRCUITS WIRE SCHEDULE

220 VOLT 1ø, 3W. CIRCUITS

CIRCUIT BREAKER	CONDUCTOR
20A–1P	2 #4mm² & 1 #4mm² GND. – 20mm C.
30A–1P	2 #6mm² & 1 #6mm² GND. – 20mm C.
40A–1P	2 #10mm² & 1 #6mm² GND. – 20mm C.
50A–1P	2 #16mm² & 1 #6mm² GND. – 25mm C.
60A–1P	2 #25mm² & 1 #10mm² GND. – 25mm C.
80A–1P	2 #35mm² & 1 #10mm² GND. – 25mm C.
100A–1P	2 #50mm² & 1 #10mm² GND. – 32mm C.

380 VOLT, 3ø, 4W. CIRCUITS

20A–3P	3 #4mm² & 1 #4mm² GND. – 20mm C.
30A–3P	3 #6mm² & 1 #6mm² GND. – 20mm C.
40A–3P	3 #10mm² & 1 #6mm² GND. – 20mm C.
50A–3P	3 #16mm² & 1 #6mm² GND. – 38mm C.
60A–3P	3 #25mm² & 1 #10mm² GND. – 38mm C.
80A–3P	3 #35mm² & 1 #10mm² GND.–38mmC.
100A–3P	3 #50mm² & 1 #10mm² GND.–40mmC.

380 VOLT, 3ø,5W. CIRCUITS

20A–3P	4 #4mm² & 1 #4mm² GND. – 20mm C.
30A–3P	4 #6mm² & 1 #6mm² GND. – 20mm C.
40A–3P	4 #10mm² & 1 #6mm² GND. – 32mm C.
50A–3P	4 #16mm² & 1 #6mm² GND. – 38mm C.
60A–3P	4 #25mm² & 1 #10mm² GND. – 38mm C.

NOTE:

1. TYPE MC CABLE SHALL INCLUDE FULL SIZE INSULATED GROUND CONDUCTOR. SIZES AS INDICATED IN SCHEDULE.

UNLESS OTHERWISE NOTED, LINEAR DIMENSIONS SHOWN ARE IN MILLIMETERS.

SYMBOL	DESCRIPTION	DATE	APR

Date: 10 MAY 2007
File No. AF0707
I.S.O. Sheet File Name: AF0707CC–EL02GN.dwg
Solicitation Number: –
Designed By:
Drawn By:
Checked By:

US Army Corps of Engineers Transatlantic Programs Center

ANA REGIONAL BRIGADE
PAKTIKA, AFGHANISTAN
EMBEDDED TRAINING FACILITY
STORAGE BUILDING
ELECTRICAL
FIXTURE SCHEDULE AND BRANCH CIRCUIT

SHEET REFERENCE NUMBER:
CC–GE–02

$DATE$
$FILE$

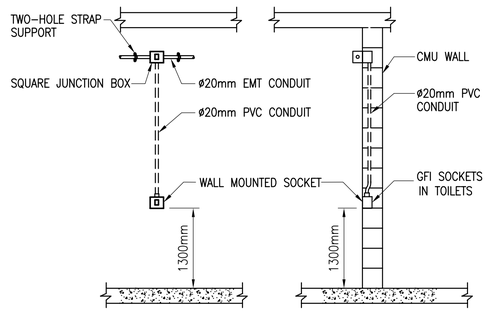

1 GENERAL INSTALLATION DETAIL FOR RECESSED SURFACE MOUNTED SOCKET IN TOILETS

SCALE: N.T.S

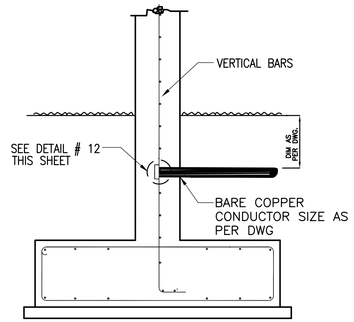

2 TYPICAL STRUCTURAL BONDING DETAIL

SCALE: N.T.S

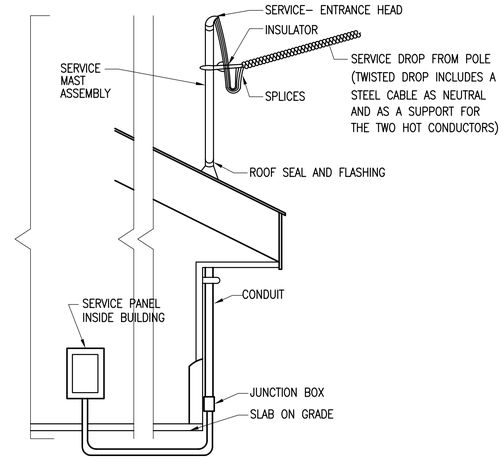

3 PANEL BOARD FEEDING FROM BOTTOM (FOR PANELS NOT IN EXTERIOR WALL)

SCALE: N.T.S.

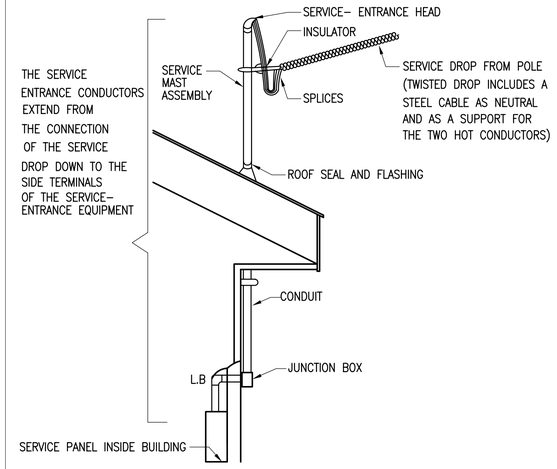

4 PANEL BOARD FEEDING FROM TOP (FOR PANELS ON EXTERLOR WALL)

SCALE: N.T.S.

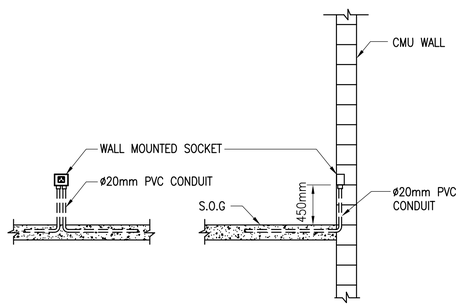

5 GENERAL INSTALLATION DETAIL FOR RECESSED SOCKET (CONDUIT EMBEDDED IN SLAB)

SCALE: N.T.S

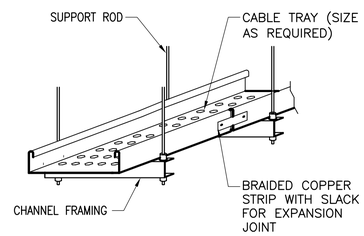

6 CABLE TRAY CROSSING EXPANSION JOINT

SCALE: N.T.S

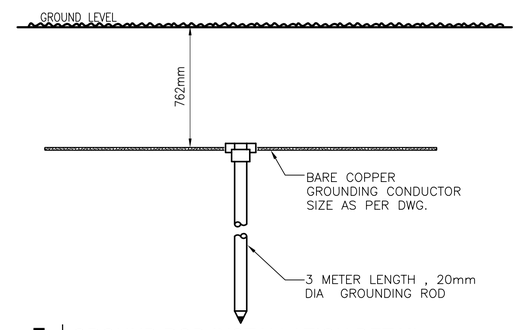

7 GROUND ROD INSTALLATION DETAIL

SCALE: N.T.S

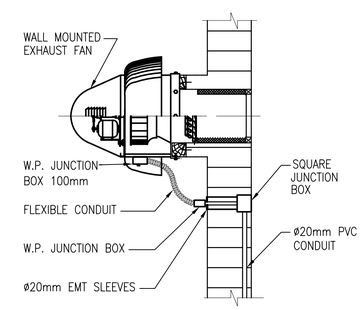

8 GENERAL INSTALLATION DETAIL FOR EXHAUST FAN (CONDUIT EMBEDDED)

SCALE: N.T.S

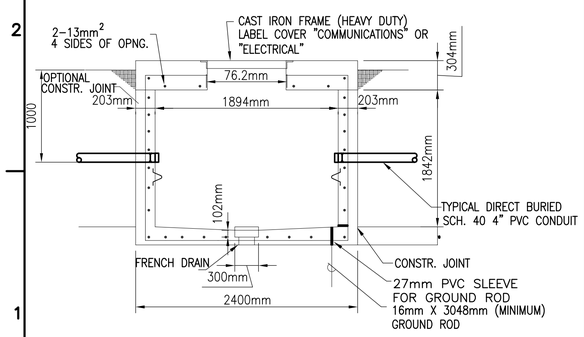

9 MANHOLE DETAIL (2400x2400mm)

SCALE: N.T.S.

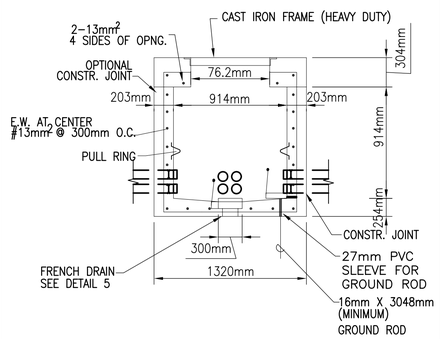

10 HAND HOLE DETAIL (1320x1320mm)

SCALE: N.T.S.

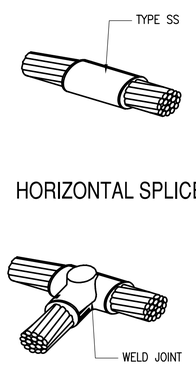

11 T-CONNECTION WELDING POINT

SCALE: N.T.S.

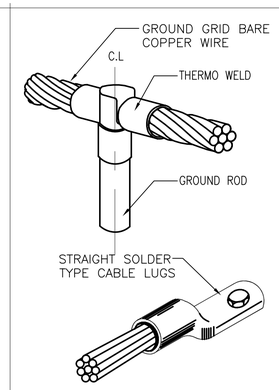

12 GROUNDING CABLE LUGS

SCALE: N.T.S.

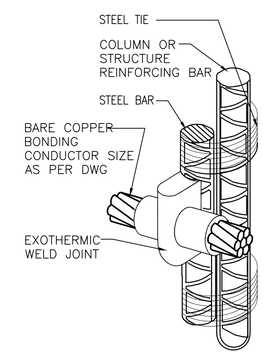

13 WELDING TO STEEL REINFORCING BAR

SCALE: N.T.S.

UNLESS OTHERWISE NOTED, LINEAR DIMENSIONS SHOWN ARE IN MILLIMETERS.

SYMBOL	DESCRIPTION	DATE	APR

Date: 10 MAY 2007
File No. AF0707
I.S.O. Sheet File Name: AF0707CC–EL02DT.dwg
Solicitation Number: –
Designed By:
Drawn By:
Checked By:

US Army Corps of Engineers Transatlantic Programs Center

ANA REGIONAL BRIGADE
PAKTIKA, AFGHANISTAN
EMBEDDED TRAINING FACILITY
STORAGE BUILDING
ELECTRICAL DETAILS

SHEET REFERENCE NUMBER:
CC–DE–02

$DATE$
$FILE$

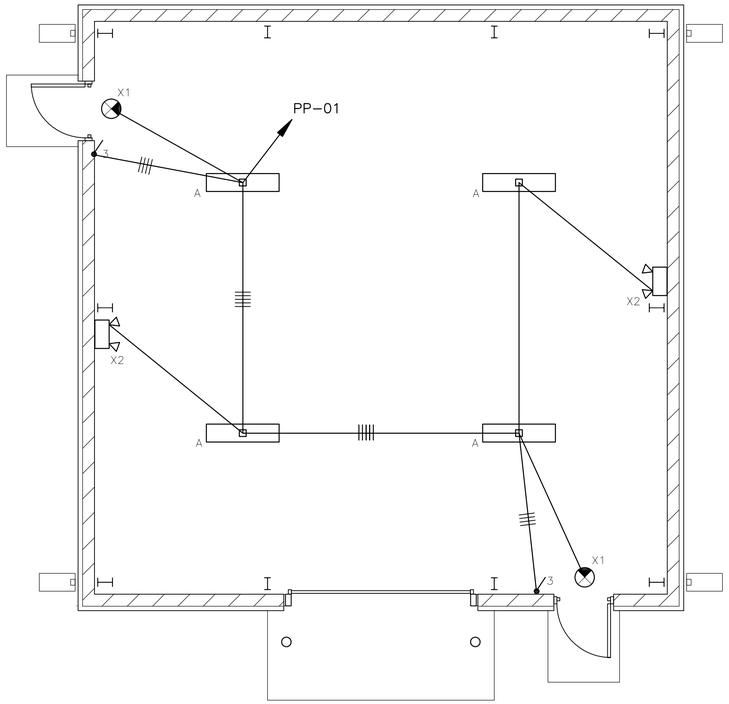

1 ELECTRICAL LIGHTING PLAN

CC-E-01 SCALE: 1:50

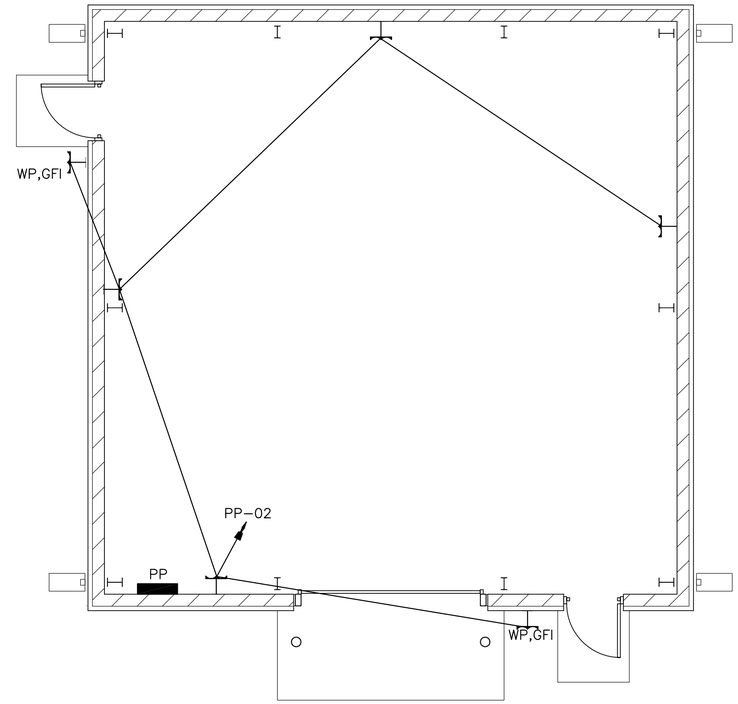

2 ELECTRICAL POWER PLAN

CC-E-01 SCALE: 1:50

NOTES:

SEE CC-GE-02 FOR BRANCH CIRCUITS WIRING SCHEDULE WITH CONDUIT SIZES.

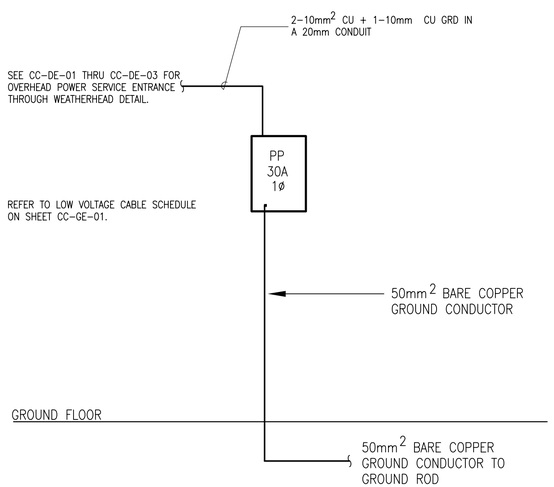

1 POWER RISER DIAGRAM

CC-E-01 SCALE: N.T.S.

PANEL "PP" SCHEDULE

30 AMPS MAIN CIRCUIT BREAKER 220 VOLTS 1 PHASE 3 WIRE 10,000 AIC

MOUNTING: SURFACE

NO	DESCRIPTION	BKR/P	VA A		VA B		BKR/P	DESCRIPTION	NO
1	LIGHTS	20/1	300	1980			20/1	RECEPS	2
3	SPARE	20/1					20/1	SPARE	4
5	SPARE	20/1					20/1	SPARE	6
7	SPARE	20/1					20/1	SPARE	8
		TOTAL	2280		0				
CONNECTED KVA:		2.28 KVA							
CONNECTED AMPS		9.5 AMPS							

1000 0 1000mm
SCALE: 1 = 50

UNLESS OTHERWISE NOTED, LINEAR DIMENSIONS SHOWN ARE IN MILLIMETERS.

SYMBOL	DESCRIPTION	DATE	APR

Date: 10 MAY 2007
File No. AF0707
I.S.O. Sheet File Name: AF0707CC-EL01PN.dwg
Solicitation Number: –
Designed By:
Drawn By:
Checked By:

US Army Corps of Engineers Transatlantic Programs Center

ANA REGIONAL BRIGADE
PAKTIKA, AFGHANISTAN
EMBEDDED TRAINING FACILITY
STORAGE BUILDING
ELECTRICAL
LIGHTING & POWER PLANS
RISER & PANEL SCHEDULE

SHEET REFERENCE NUMBER:
CC-E-01

$DATE$
$FILE$

LIGHTING LEGEND:

	ONE LAMP FLUORESCENT L.F.
	TWO LAMPS FLUORESCENT L.F.
	FOUR LAMPS FLUORESCENT L.F.
	FLOOD LIGHT, WALL MOUNTED
	6 METER, LIGHTING POLE WITH FLOOD LIGHT
	MIRROR WALL MOUNTED LIGHT FIXTURE
	WALL MOUNTED FIXTURE
	PENDANT MOUNTED INDUSTRIAL, LOW/HIGH BAY L.F.
X1	SURFACE (WALL/CELING)ONE FACE EXIT SIGN WITH BACK UP BATTERY.
X2	WALL MOUNTED EMERGENCY LIGHT WITH BACK UP BATTERY.
D	DIMMING SWITCH, 220V, 16AMP MOUNTED HEIGHT = 1300mm ABOVE FINISH FLOOR LEVEL FROM THE CENTER OF SWITCH
	ONE WAY SWITCH, 220V, 16AMP MOUNTED HEIGHT = 1300mm ABOVE FINISH FLOOR LEVEL FROM THE CENTER OF SWITCH
3	3 WAY SWITCH, 220V, 16AMP MOUNTED HEIGHT = 1300mm ABOVE FINISH FLOOR LEVEL FROM THE CENTER OF SWITCH
4	4 WAY SWITCH, 220V, 16AMP MOUNTED HEIGHT = 1300mm ABOVE FINISH FLOOR LEVEL FROM THE CENTER OF SWITCH

LOW CURRENT LEGEND:

TTC	TELEPHONE TERMINAL CABINET, SEE NOTE 3
	EQUIPMENT AS IDENTIFIED ON PLANS
	TELPHONE/DATA OUTLET DUPLEX, RJ-45, 4 PAIR CATEGORY 5E, SEE NOTE 2 & 5
FP	FIRE ALARM BOX FOR FUTURE INSTALLATION OF SELF SMOKE DETECTOR. LOCATE BOX A MIN. OF 1.0M FROM TIP OF FAN BLADE.
	TELEPHONE OUTLET ,RJ-45,4 PAIR CATEGORY 5E, SEE NOTE #2, 5

GROUNDING LEGEND:

	3 METER LENGTH, 0.02m DIAMETER , COPPER GROUNDING ROD
	UNDERGROUND BARE COPPER CONDUCTOR FOR CONNECTION BETWEEN GROUNDING RODS SIZE AS INDICATED ON THE PLAN
T	T-SPLICE EXOTHERMIC WELD
	AIR TERMINAL

POWER LEGEND:

	ELECTRICAL PANEL BOARD, SEE NOTE 4
MDP	MAIN DISTRIBUTION PANEL (MDP)
	NON FUSED DISCONNECT SWITCH ,220V ,50HZ ,20A (U.O.N)
	COMBINATION MOTOR STARTER SWITCH ,220V ,50HZ ,20A (U.O.N)
M	MANUAL MOTOR STARTER, WITH OVER LOAD PROTECTION RATING AS REQUIRED BY EXHAUST FAN MANUFACTURER MOUNTED HEIGHT = 1300mm ABOVE FINISH FLOOR LEVEL
3M	MOTOR RATED 3-SPEED SWITCH FOR CEILING FAN, 220V, 20AMP MOUNTED HEIGHT = 1300mm ABOVE FINISH FLOOR LEVEL
	RECESSED MOUNTED DUPLEX RECEPTACLES 1PH, 240V, 16A, 50HZ GROUNDING DIN TYPE. MOUNTING HEIGHT = 450mm ABOVE FINISH FLOOR LEVEL
GFI	RECESSED MOUNTED SINGLE RECEPTACLES 1PH, 240V, 16A, 50HZ GROUNDING DIN TYPE WITH GROUND FAULT INTERRUPTER AND SWITCH. MOUNTING HEIGHT =1300mm ABOVE FINISH FLOOR
CEE	RECESSED MOUNTED DUPLEX RECEPTACLES 3PH, 380V, 30A, 50HZ GROUNDING DIN TYPE MOUNTING HEIGHT =450mm ABOVE FINISH FLOOR
G	RECESSED MOUNTED DUPLEX RECEPTACLE LABEL INDICATE (HOSPITAL GRAD) 1PH, 240V, 16A, 50HZ GROUNDING DIN TYPE . MOUNTING HEIGHT =500mm ABOVE FINISH FLOOR INSULATED 4mm GROUNDING WIRE PER EACH RECEPTACLE
	SINGLE POWER SOCKET OUTLET, 220V, 50HZ, 20A MOUNTING HEIGHT = 450mm (U.O.N.)
PB	100mm x 100mm PULL BOX.
J	100mm x 100mm JUNCTION BOX
J CL	JUNCTION BOX FOR CEILING FAN WITH LIGHTS, SEE MECH STD. DETAILS
C.B	CIRCUIT BREAKER 30 AMP , 3 POLE , 380V , 50HZ
M	MOTORIZE DAMPER
REL	RELAY PANEL
M	MOTOR
H	HEATER
B XX-E-01	DETAIL DESIGNATION, TOP NUMBER INDICATE DETAIL NUMBER, BOTTOM LETTER INDICATES SHEET REF. NUMBER.

LIGHT FIXTURE NOTES:

1. ALL PENDANT MOUNTED FIXTURES ARE TO INCLUDE MANUFACTURERS "BALL-HANGER" TYPE CANOPY TO COMPENSATE FOR ROOF PITCH. FIELD CUT TO LENGTH.
2. ALL LIGHTING FIXTURES TO BE PROVIDED WITH "STANDARD" HIGH POWER FACTOR "ELECTRONIC" BALLASTS, UNLESS NOTED OTHERWISE.

LINE TYPE:

- - - - - - -	EXPOSED CONDUIT
————	EMBEDDED OR CONCEALED CONDUIT
- - -|- - - -	LIGHTNING PROTECTION CONDUCTOR

ABBREVIATIONS:

A	AMP
A.H.U.	AIR HANDLING UNIT
A/C	AIR CONDITIONING
A.C.U.	AIR CONDITION UNIT
A.F.F.	ABOVE FINNISH FLOOR LEVEL
C	CONDUIT
CB	CIRCUIT BREAKER
CHH	COMMUNICATION HANDHOLE
C.L.	CENTERLINE
C.O.E.	CORE OF ENGINEERS
CU	CONDENSING UNIT
ø, DIA	DIAMETER
EF	EXHAUST FAN
EHH	ELECTRICAL HANDHOLE
EMT	ELECTRIC METALLIC TUBING
EWH	ELECTRICAL WATER HEATER
FACP	FIRE ALARM CONTROL PANEL
GFI	GROUND FAULT INTERRUPTER
GRS	GALVANIZED RIGID STEEL
HZ	HERTZ
IR	IMPULSE RELAY
IL	INVERTED LEVEL
UTP	UNSHIELDED TWISTED PAIR
N.F.D.S	NON FUSED DISCONNECT SWITCH
L.C.	LIGHTING CONTACTOR
L.F.	LIGHT FIXTURE
LPI	LIGHTNING PROTECTION INSTITUTE
M	METER
MAX	MAXIMUM
MD	MOTORIZE DAMPER
MECH	MECHANICAL
MLO	MAIN LUGS ONLY
mm	MILLIMETER
P.A.C.U.	PACKAGE AIR CONDITION UNIT
PVC	POLYVINYL CHLORIDE
RM	ROOM
SF	SUPPLY FAN
S.U.	SPLIT UNIT
TRANS	TRANSFORMER
TTC	TELEPHONE TERMINAL CABINET
TYP	TYPICAL
TV	TELEVISION
U.O.N.	UNLESS OTHERWISE NOTED
V	VOLT
W	WATT
WP	WEATHER PROOF
WR	WELDING RECEPTACLE
RP	RECALCULATION PUMP

GENERAL NOTES:

1. MOUNTING HEIGHT OF SWITCHES 1.3M AFF UNLESS OTHERWISE NOTED.
2. MOUNT RECEPTACLES AND TELPHONE/DATA OUTLETS 450mm AFF UNLESS OTHERWISE NOTED. W=MOUNT 1.4M AFF.
3. MOUNT TELEPHONE TERMINAL CABINET (TTC) 1800mm FROM THE TOP OF CABINET TO FLOOR.
4. MOUNT ELECTRICAL PANELS 1800mm A.F.F. TO THE TOP OF THE PANEL.
5. TELEPHONE/DATA CABLE SHALL BE CAT 5E, 4 PAIRS
6. FOR EXACT LOCATION OF MECHANICAL EQUIPMENT REFER TO MECHANICAL DESIGN DRAWINGS.
7. EQUIPMENT SHALL BE RATED FOR 40 DEGREES C AND 2000 METERS (ABOVE SEA LEVEL) ELEVATION
8. THE GROUNDING RESISTANCE SHALL BE NO HIGHER THAN 25 OHMS , EXCEPT IN THE UPS AND EQUIPMENT ROOM SHALL BE 5 OHMS MEASURED MIN OF 48 HRS AFTER RAINFALL, ADDITIONAL RODS SHOULD BE USED TO ACHIEAVED THE REQUIRED RESISTANCE
9. ALL LIGHT FIXTURES SHALL BE SEISMICALLY BRACED.
10. ALL PANEL BOARD AIC RATINGS AS SHOWN ON SCHEDULES.
11. THE ELECTRICAL WIRING SHOWN ON PLAN DRAWINGS IS DIAGRAMMATIC AND INTENDED TO IDENTIFY THE CIRCUIT ARRANGEMENT FOR EACH AREA. THE CONDUIT CAN BE COMBINED FOR DIFFERENT CIRCUITS, PROVIDED THE INSTALLATION MEETS THE NEC, WITH NO MORE THAN 3 CONNECTIVE CIRCUITS IN ANY CONDUIT, SUCH AS 1, 3, 5 OR 2, 4, 6, ETC. THE 3 CIRCUITS CAN SHARE ONE NEUTRAL CONDUCTOR.

UNLESS OTHERWISE NOTED, LINEAR DIMENSIONS SHOWN ARE IN MILLIMETERS.

SYMBOL	DESCRIPTION	DATE	APR

Designed By:
Date: 10 MAY 2007
Drawn By:
File No. AF0707
Checked By:
I.S.O. Sheet File Name: AF0707CC-EL01GN.dwg
Solicitation Number: -

US Army Corps of Engineers Transatlantic Programs Center

ANA REGIONAL BRIGADE
PAKTIKA, AFGHANISTAN
EMBEDDED TRAINING FACILITY
STORAGE BUILDING
ELECTRICAL
LEGEND AND NOTES

SHEET REFERENCE NUMBER:
CC-GE-01

$DATE$
$FILE$

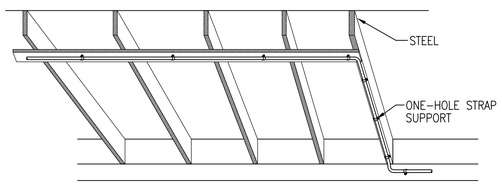

1 SURFACE MOUNTED CONDUIT SUPPORT

SCALE: N.T.S

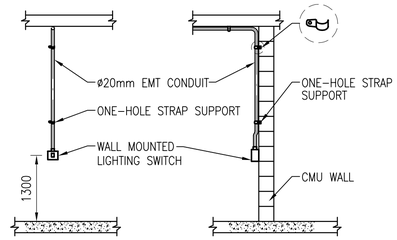

NOTE:-
WALL MOUNTED LIGHTING OUTLETS SHOULD BE CENTRAL ON A BLOCK, NOT BETWEEN TWO BLOCKS.

2 GENERAL INSTALLATION DETAIL FOR LIGHTING SWITCH (CONDUIT EXPOSED)

SCALE: N.T.S

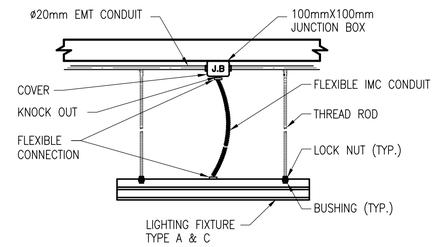

3 PENDANT LIGHT FIXTURE DETAIL (NOT USED)

SCALE: N.T.S

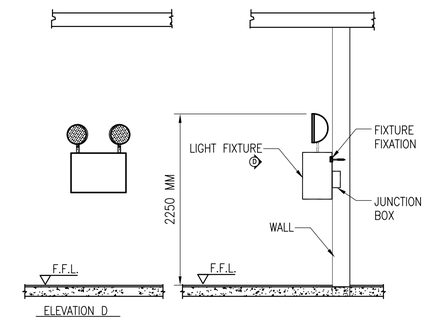

4 SURFACE EMERGENCY LIGHT FIXTURE DETAIL

SCALE: N.T.S

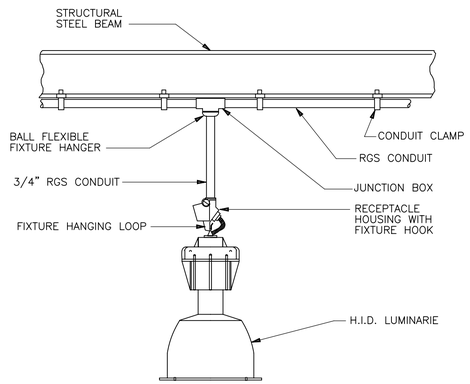

5 H.I.D. LUMINARIE PENDANT MOUNTED

SCALE: N.T.S

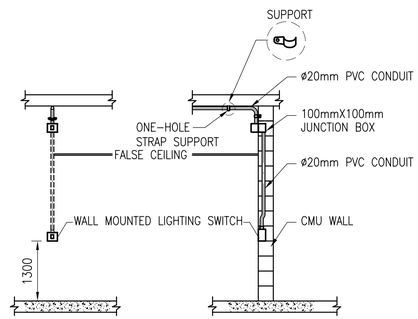

6 GENERAL INSTALLATION DETAIL FOR LIGHT SWITCH (CONDUIT CONCEALED)

SCALE: N.T.S

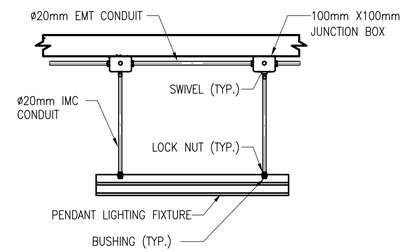

7 INSTALLATION OF LIGHTING FIXTURE IN SEISMIC BUILDING

SCALE: N.T.S

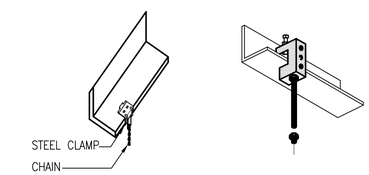

THE CHAIN FIXATION

THREADED ROD FIXATION

8 GENERAL SUPPORT DETAIL

SCALE: N.T.S

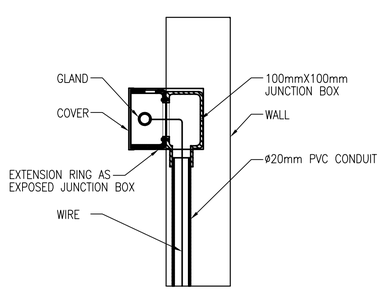

9 CONVERTING FROM EXPOSED TO EMBEDDED ROUTING IN WALL

SCALE: N.T.S

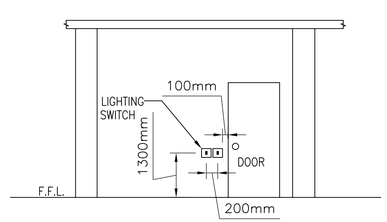

NOTE:-
THE LOCATION OF THE CONDUIT FEEDING THE FIRST SWITCH TO BE 100mm FROM THE DOOR OPENING

10 LIGHT SWITCH MOUNTING

SCALE: N.T.S

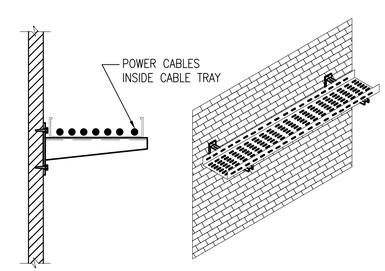

11 GENERAL INSTALLATION DETAIL FOR WALL MOUNTED CABLE TRAY

SCALE: N.T.S

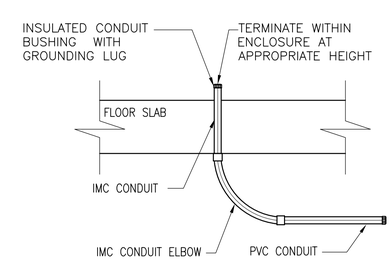

12 TYPICAL CONDUIT STUB-UP THROUGH FLOOR SLAB FOR FEEDING EQUIPMENT

SCALE: N.T.S

UNLESS OTHERWISE NOTED, LINEAR DIMENSIONS SHOWN ARE IN MILLIMETERS.

SYMBOL	DESCRIPTION	DATE	APR

Designed By:
Drawn By:
Checked By:
Date: 10 MAY 2007
File No. AF0707
I.S.O. Sheet File Name: AF0707CC-EL01DT.dwg
Solicitation Number: -

US Army Corps of Engineers Transatlantic Programs Center

ANA REGIONAL BRIGADE
PAKTIKA, AFGHANISTAN
EMBEDDED TRAINING FACILITY
STORAGE BUILDING
ELECTRICAL DETAILS

SHEET REFERENCE NUMBER:
CC-DE-01

$DATE$
$FILE$

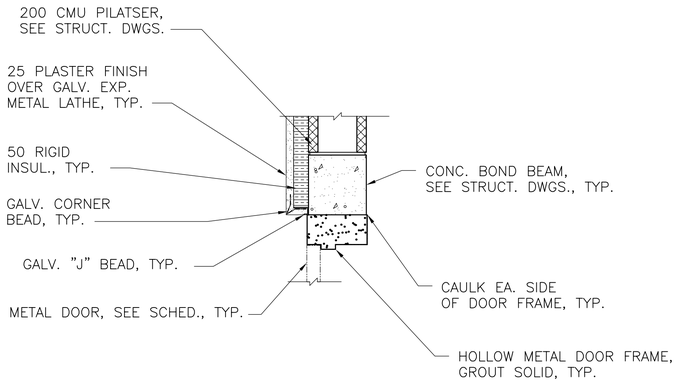

1 DETAIL - EXTERIOR DOOR HEAD

CC-A-01 REF. SCALE: 1:10

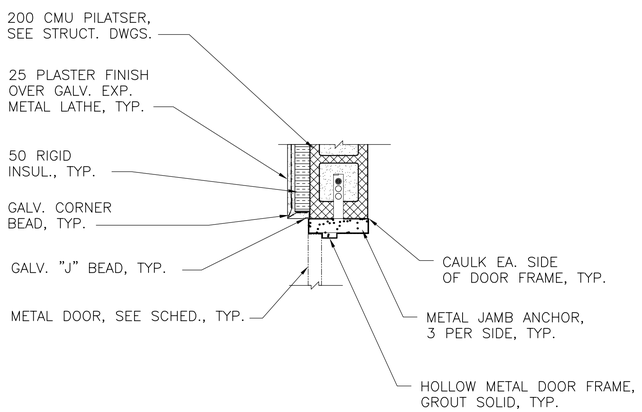

2 DETAIL - EXTERIOR DOOR JAMB

CC-A-01 REF. SCALE: 1:10

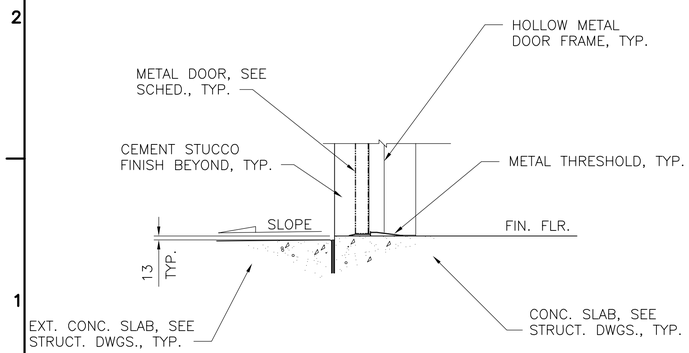

3 DETAIL - EXTERIOR DOOR SILL

CC-A-01 REF. SCALE: 1:10

GRAPHIC SCALE:

200 0 200mm
SCALE: 1 = 10

UNLESS OTHERWISE NOTED, LINEAR DIMENSIONS SHOWN ARE IN MILLIMETERS.

SYMBOL	DESCRIPTION	DATE	APP.

Designed By: R. BROWN
Drawn By: D. GRIFFIN
Checked By: R. BROWN
B. THOMAS

Date: 10 MAY 2007
File No. AF0707
I.S.O. Sheet File Name: AF0707CC-AR09DT.dwg
Solicitation Number: –

US Army Corps of Engineers Transatlantic Programs Center

ANA REGIONAL BRIGADE
PAKTIKA, AFGHANISTAN
EMBEDDED TRAINING FACILITY
STORAGE BUILDING

MISCELLANEOUS DETAILS

SHEET REFERENCE NUMBER:
CC–A–09

$DATE$
$FILE$

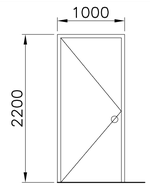

1 DOOR (D1)
SCALE: 1:40

1A DOOR (D1A) 20–MIN. FIRE RATED
SCALE: 1:40

1B DOOR (D1B) 45–MIN. FIRE RATED
SCALE: 1:40

1C DOOR (D1C) INSULATED
SCALE: 1:40

1D DOOR (D1D) 90–MIN. FIRE RATED
SCALE: 1:40

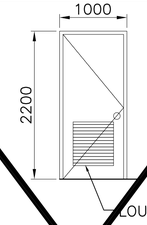

2 DOOR (D2)
SCALE: 1:40

2A DOOR (D2A) 20–MIN. FIRE RATED
SCALE: 1:40

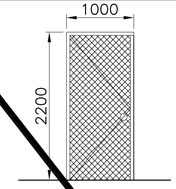

3 DOOR (D3)
SCALE: 1:40

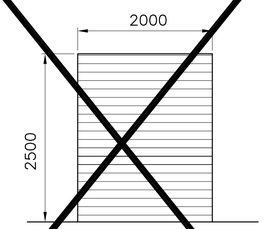

4 DOOR (D4)
SCALE: 1:40

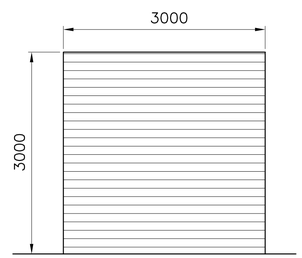

5 DOOR (D5)
SCALE: 1:40

5A DOOR (D5A)
SCALE: 1:40

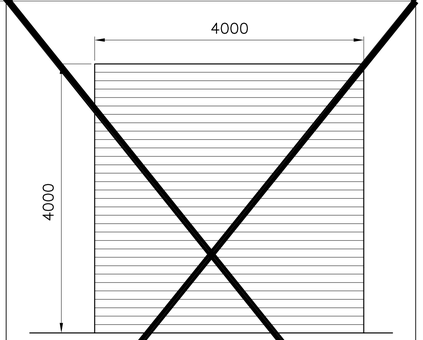

6 DOOR (D6)
SCALE: 1:40

6A DOOR (D6A)
SCALE: 1:40

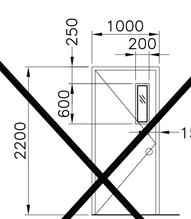

7 DOOR (D7)
SCALE: 1:40

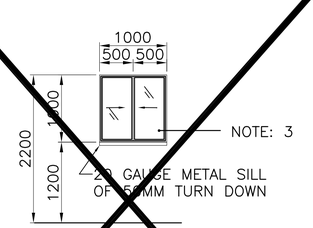

8 WINDOW (W1)
SCALE: 1:40

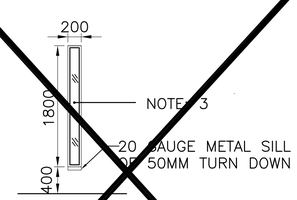

9 WINDOW (W2)
SCALE: 1:40

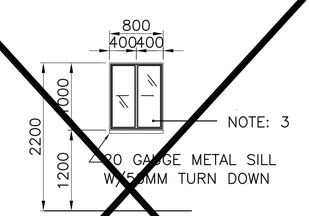

10 WINDOW (W3)
SCALE: 1:40

DOOR SCHEDULE

DOOR NO.	DIMENSION WIDTH	DIMENSION HEIGHT	PANEL NUMBER	OPENING SYSTEM	HDWR. NO.	MATERIAL
~~D1~~	~~1000~~	~~2200~~	~~1~~	~~HINGED~~	~~–~~	HM DOOR IN HM FRAME
~~D1A~~	~~1000~~	~~2200~~	~~1~~	~~HINGED~~	~~–~~	HM DOOR IN HM FRAME; 20 MIN FIRE RATED
~~D1B~~	~~1000~~	~~2200~~	~~1~~	~~HINGED~~	~~–~~	HM DOOR IN HM FRAME; 45 MIN FIRE RATED
D1C	1000	2200	1	HINGED	–	HM DOOR IN HM FRAME; INSULATED
~~D1D~~	~~1000~~	~~2200~~	~~1~~	~~HINGED~~	~~–~~	HM DOOR IN HM FRAME; 90 MIN FIRE RATED
D2	3000	3000	1	HINGED	–	HM DOOR IN HM FRAME W/ LOUVER
D2A	3000	4000	1	HINGED	–	HM DOOR IN HM FRAME W/ FIRE DAMPER FUSIBLE LINK LOUVER 20 MIN FIRE RATED
~~D3~~	~~1000~~	~~2200~~	~~1~~	~~HINGED~~	~~–~~	WELDED WIRE MESH IN STEEL FRAME
D4	2000	2500	1	ROLL–UP	–	STEEL DOOR & FRAM, MANUALLY OPERATED, INSULATED
~~D5~~	~~3000~~	~~3000~~	~~1~~	~~ROLL–UP~~	~~–~~	STEEL DOOR & FRAM, MANUALLY OPERATED, INSULATED
~~D5A~~	~~3000~~	~~3000~~	~~1~~	~~ROLL–UP~~	~~–~~	STEEL DOOR & FRAM, MANUALLY OPERATED, UNINSULATED
~~D6~~	~~4000~~	~~4000~~	~~1~~	~~ROLL–UP~~	~~–~~	STEEL DOOR & FRAM, MANUALLY OPERATED, INSULATED
~~D6A~~	~~4000~~	~~4000~~	~~1~~	~~ROLL–UP~~	~~–~~	STEEL DOOR & FRAM, MANUALLY OPERATED, INSULATED
D7	1000	2200	1	HINGED	–	HM DOOR IN HM FRAME W/ LAMINATED GLAZING

WINDOW SCHEDULE

WINDOW NUMBER	DIMENSION WIDTH	DIMENSION HEIGHT	DIMENSION SILL HEIGHT	PANEL NUMBER	OPENING SYSTEM	DESCRIPTION
W1	1000	1000	1700	2	SLIDING	ALUM. PANELS W/TRANSPARENT 6MM GLASS METAL SILL AND FIXED INSECT METAL SCREEN
W2	200	1800	400	1	FIXED	ALUM. PANELS W/6MM WIRE GLASS
W3	800	1000	1700	2	SLIDING	ALUM. PANELS W/TRANSPARENT 6MM GLASS METAL SILL AND FIXED INSECT METAL SCREEN

NOTES:

1. FOR HARDWARE SET DESCRIPTION SEE SPECIFICATIONS SECTION.
2. ITEMS BLOCKED OUT, OR LINED THROUGH, DO NOT APPLY TO THIS FACILITY.
3. ALL GLAZING SHALL BE LAMINATED.

GRAPHIC SCALE:

200 0 200mm
SCALE: 1 = 10

UNLESS OTHERWISE NOTED, LINEAR DIMENSIONS SHOWN ARE IN MILLIMETERS.

SYMBOL	DESCRIPTION	DATE	APR

Designed By: R. BROWN
Date: 10 MAY 2007
Drawn By: D. GRIFFIN
File No. AF0707
Checked By: R. BROWN
I.S.O. Sheet File Name: AF0707CC–AR08SC.dwg
B. THOMAS
Solicitation Number: –

US Army Corps of Engineers Transatlantic Programs Center

ANA REGIONAL BRIGADE
PAKTIKA, AFGHANISTAN
INTERPRETER FACILITIES
MWR
DOOR SCHEDULE

SHEET REFERENCE NUMBER:
CC–A–08

$DATE$
$FILE$

FINISH SCHEDULE

ROOM NO.	ROOM NAME	FLOOR	CEILING	INTERIOR WALLS				REMARKS
				NORTH	EAST	SOUTH	WEST	
100	STORAGE AREA	F1	C1	W1 & W2	W1 & W2	W1 & W2	W1 & W2	NOTE 9

FINISHING SCHEDULE LEGEND

FLOOR

F1	SEALED CONCRETE

WALL

W1	CMU–PAINTED
W2	EXPOSED STRUCTURE PAINTED AND VINYL FACED INSULATION

CEILING

C1	EXPOSED MET STRUCTURE AND VINYL FACED INSULATION

WALL SYMBOLS:

CMU WALL

CMU LOW HEIGHT WALL +/– 2600 MM WITH PAINTED FINISH

CJ — CMU CONTROL JOINT

FINISHING SCHEDULE

Room No.	Usage	Floor	Wall	Ceiling	Remarks
100	STORAGE AREA	F1	W1 & W2	C1	

EXTERIOR FINISH/ MATERIAL INDEX

DOWNSPOUTS/GUTTERS:
MATCH ADJACENT WALL

ROOF:
SSMR– STANDING SEAM METAL ROOF

MISCELLANEOUS:
B– BOLLARD

NOTE:
SEE SPECIFICATIONS FOR SPECIFIC MATERIAL/COLOR DESIGNATIONS AND LOCATIONS.

NOTES:

1– ALL WALLS ARE 200MM THK. CMU UNLESS NOTED OTHERWISE.

2– ALL WALLS TERMINATE AT CEILING UNLESS NOTED OTHERWISE. REF. STRUCT. DRWGS.

3– ALL DOOR JAMBS ARE 200MM UNLESS OTHERWISE NOTED.

4– ALL DIMENSIONS ARE TO FACE OF CMU UNLESS NOTED OTHERWISE.

5– ALL VERTICAL DIMENSIONS & LEVELS ARE FROM GROUND FLOOR FINISHED SLAB. THIS ELEVATION IS +0000.

6– NOT USED.

7– SEE STRUCTURAL DRAWINGS FOR LOCATION OF BUILDING CONTROL, EXPANSION AND SEISMIC JOINTS.

8– NOT USED

9– INSIDE SURFACES OF WALL PANELS AND ROOF DECKING TO BE COVERED BY VINYL FACED INSULATION BATTS. EXPOSED PURLINS, COLUMNS, FRAMES, AND GIRTS SHALL BE PAINTED.

10– TOTAL AREA OF BUILDING IS 102.00 M2.

UNLESS OTHERWISE NOTED, LINEAR DIMENSIONS SHOWN ARE IN MILLIMETERS.

SYMBOL	DESCRIPTION	DATE	APR

Designed By:
Drawn By:
Checked By:
Date: 10 MAY 2007
File No. AF0707
I.S.O. Sheet File Name: AF0707CC–AR07SC.dwg
Solicitation Number: –

US Army Corps of Engineers Transatlantic Programs Center

ANA REGIONAL BRIGADE
PAKTIKA, AFGHANISTAN
EMBEDDED TRAINING FACILITY
STORAGE BUILDING
SCHEDULE

SHEET REFERENCE NUMBER:
CC–A–07

$DATE$
$FILE$

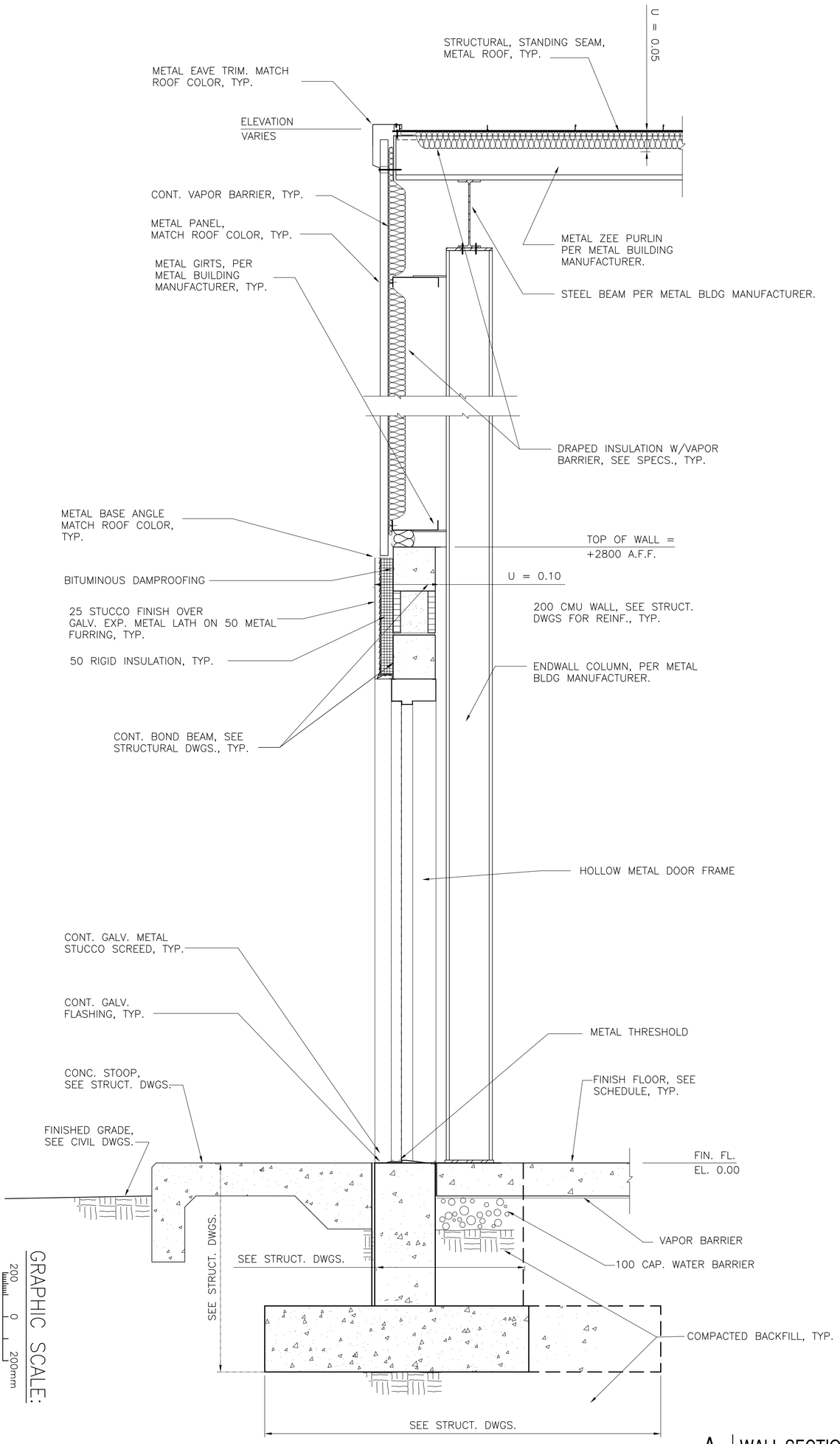

A | WALL SECTION

CC-A-01 REF. SCALE: 1:50

GRAPHIC SCALE: 200 100 0 200mm

SCALE: 1 = 10

UNLESS OTHERWISE NOTED, LINEAR DIMENSIONS SHOWN ARE IN MILLIMETERS.

SHEET REFERENCE NUMBER: CC-A-06

ANA REGIONAL BRIGADE
PAKTIKA, AFGHANISTAN
EMBEDDED TRAINING FACILITY
STORAGE BUILDING

WALL SECTION

US Army Corps of Engineers
Transatlantic Programs Center

Designed By:	Date: 10 MAY 2007
Drawn By:	File No. AF0707
Checked By:	I.S.O. Sheet File Name: AF0707CC-AR06SE.dwg
	Solicitation Number: –

SYMBOL	DESCRIPTION	DATE	APR.

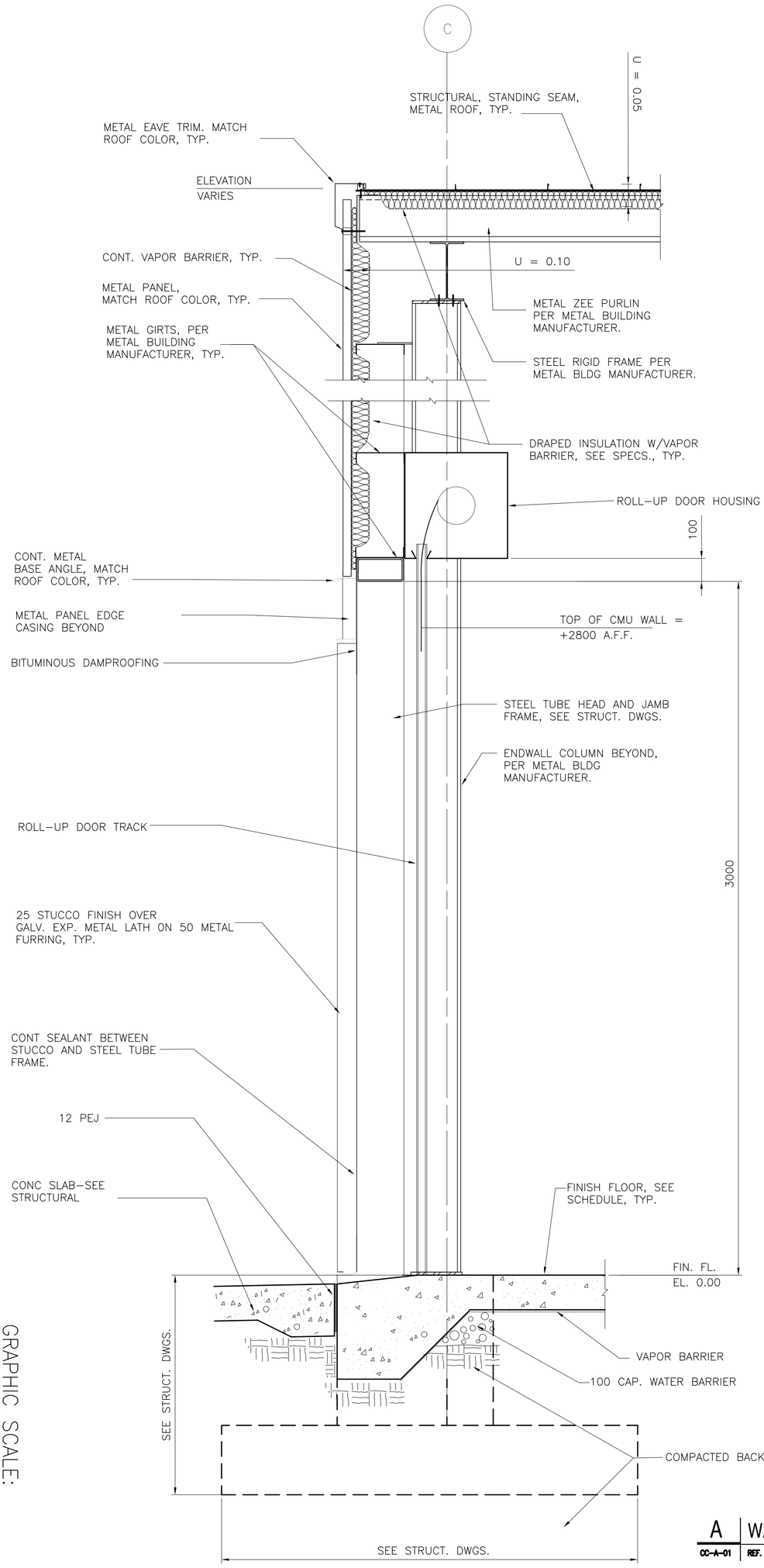

A | WALL SECTION

CC-A-01 | REF. | SCALE: 1:50

GRAPHIC SCALE: 200 100 0 200mm
SCALE: 1 = 10

UNLESS OTHERWISE NOTED, LINEAR DIMENSIONS SHOWN ARE IN MILLIMETERS.

SHEET REFERENCE NUMBER: CC-A-05

ANA REGIONAL BRIGADE
PAKTIKA, AFGHANISTAN
EMBEDDED TRAINING FACILITY
STORAGE BUILDING

WALL SECTION

US Army Corps of Engineers
Transatlantic Programs Center

Designed By:	Date: 10 MAY 2007
Drawn By:	File No. AF0707
Checked By:	I.S.O. Sheet File Name: AF0707CC-AR05SE.dwg
	Solicitation Number: –

SYMBOL	DESCRIPTION	DATE	APR.

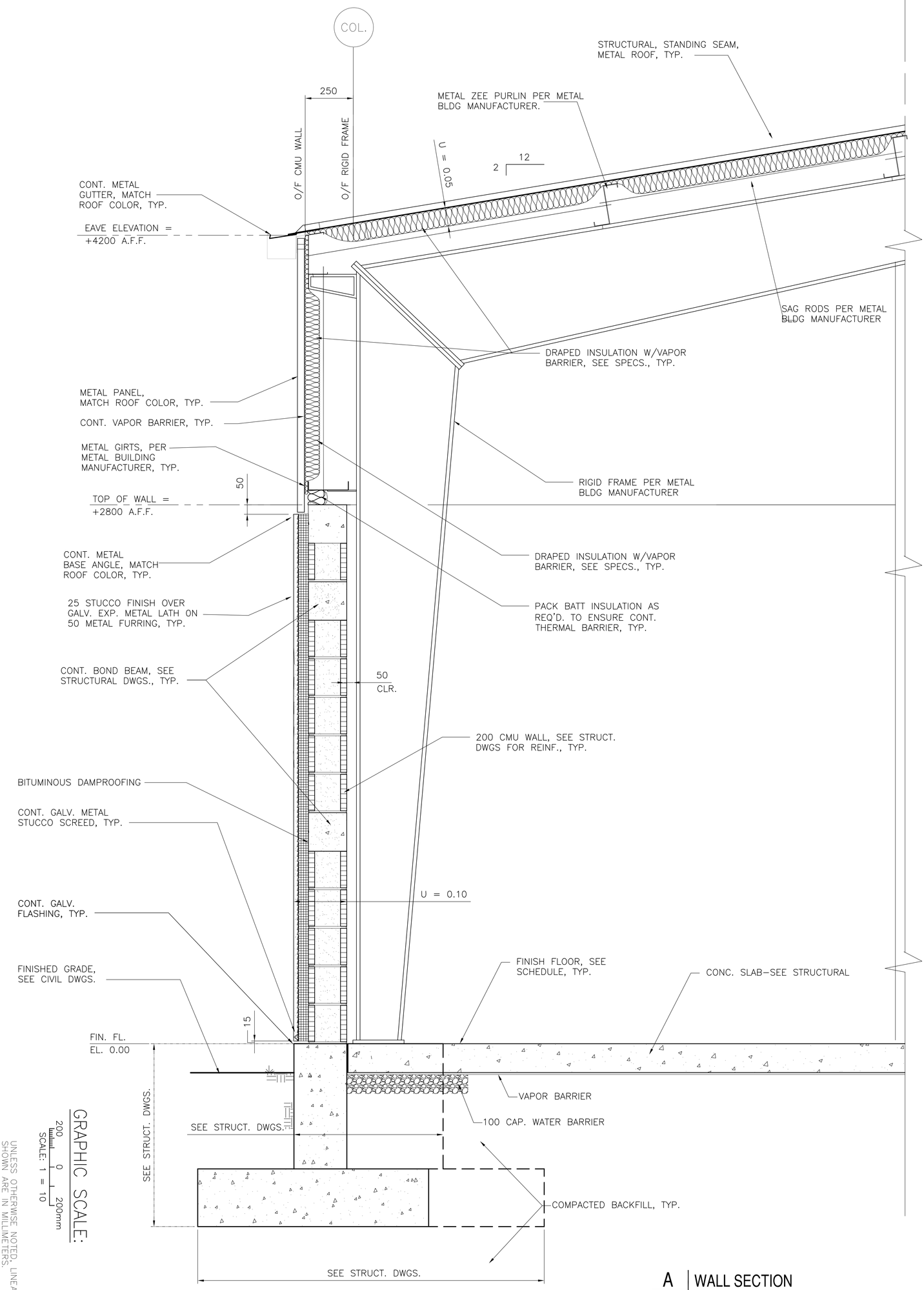

A | WALL SECTION

CC–A–01 | REF. | SCALE: 1:50

GRAPHIC SCALE: 200 mm 0 200mm
SCALE: 1 = 10

UNLESS OTHERWISE NOTED, LINEAR DIMENSIONS SHOWN ARE IN MILLIMETERS.

SHEET REFERENCE NUMBER: CC–A–04

ANA REGIONAL BRIGADE
PAKTIKA, AFGHANISTAN
EMBEDDED TRAINING FACILITY
STORAGE BUILDING

WALL SECTION

US Army Corps of Engineers
Transatlantic Programs Center

Designed By:	Date: 10 MAY 2007
Drawn By:	File No. AF0707
Checked By:	I.S.O. Sheet File Name: AF0707CC–AR04SE.dwg
	Solicitation Number: –

SYMBOL	DESCRIPTION	DATE	APR.

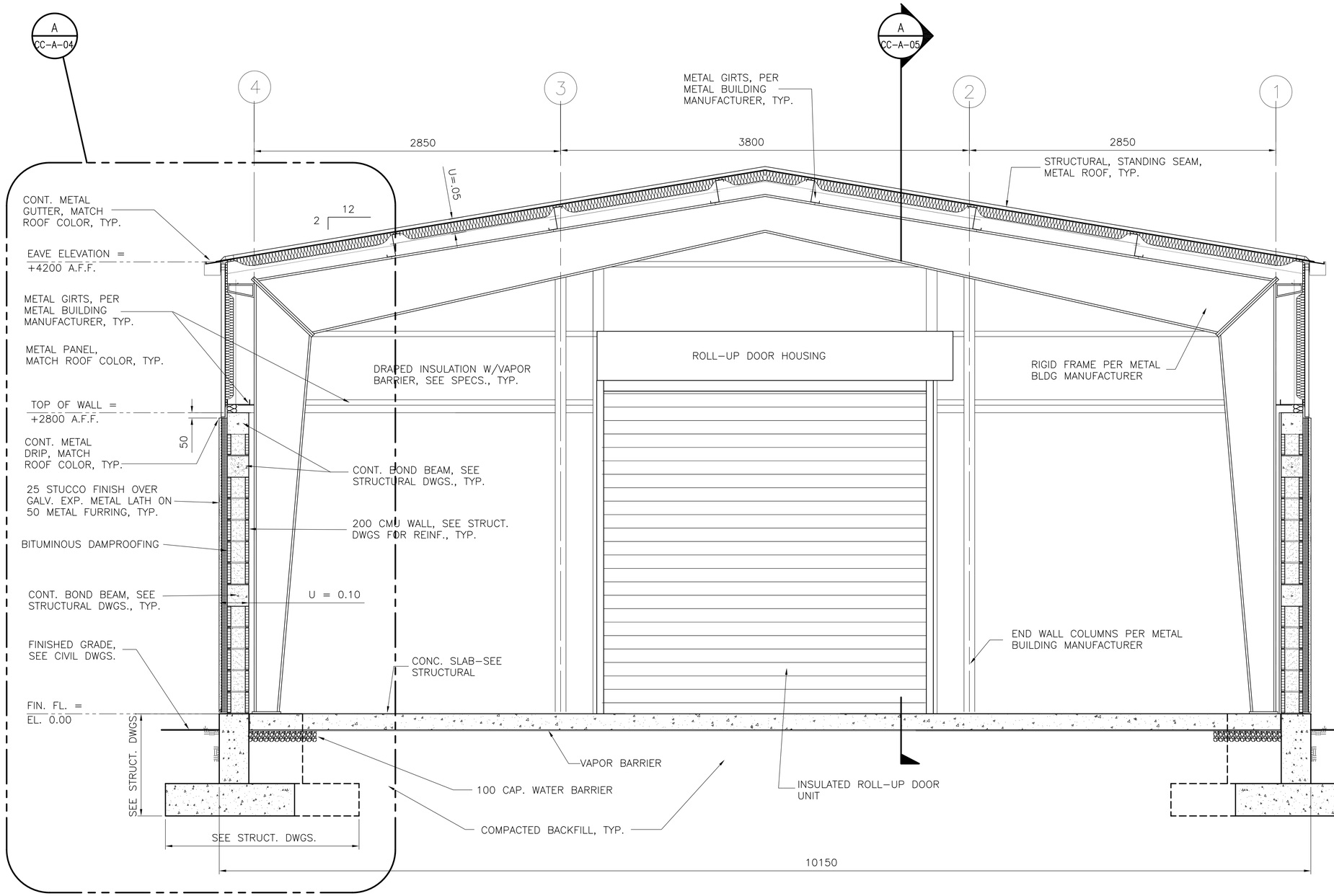

A BUILDING SECTION

CC-A-01 REF. SCALE: 1:50

GRAPHIC SCALE:

400 0 400mm

SCALE: 1 = 20

UNLESS OTHERWISE NOTED, LINEAR DIMENSIONS SHOWN ARE IN MILLIMETERS.

SYMBOL	DESCRIPTION	DATE	APR

Designed By:
Drawn By:
Checked By:
Date: 10 MAY 2007
File No. AF0707
I.S.O. Sheet File Name: AF0707CC-AR03EL.dwg
Solicitation Number: –

US Army Corps of Engineers Transatlantic Programs Center

ANA REGIONAL BRIGADE
PAKTIKA, AFGHANISTAN
EMBEDDED TRAINING FACILITY
STORAGE BUILDING

BUILDING SECTION

SHEET REFERENCE NUMBER:
CC-A-03

$DATE$
$FILE$

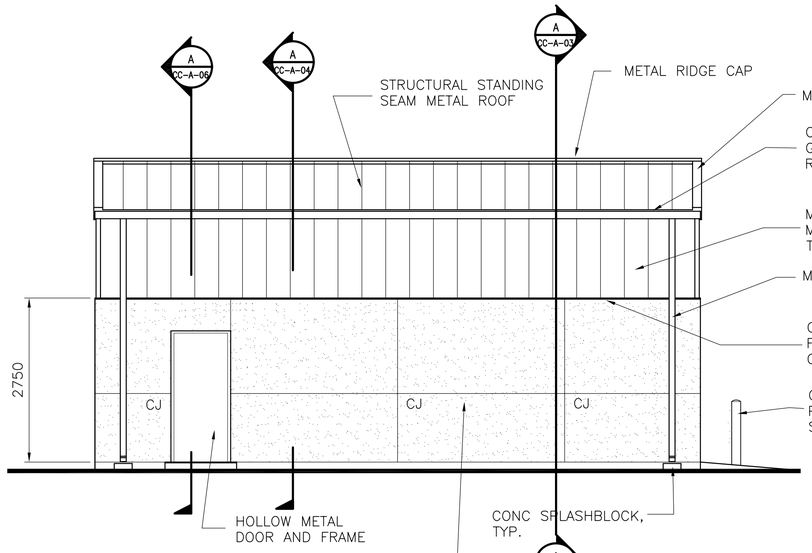

1 ELEVATION

CC-A-01 REF. SCALE: 1:50

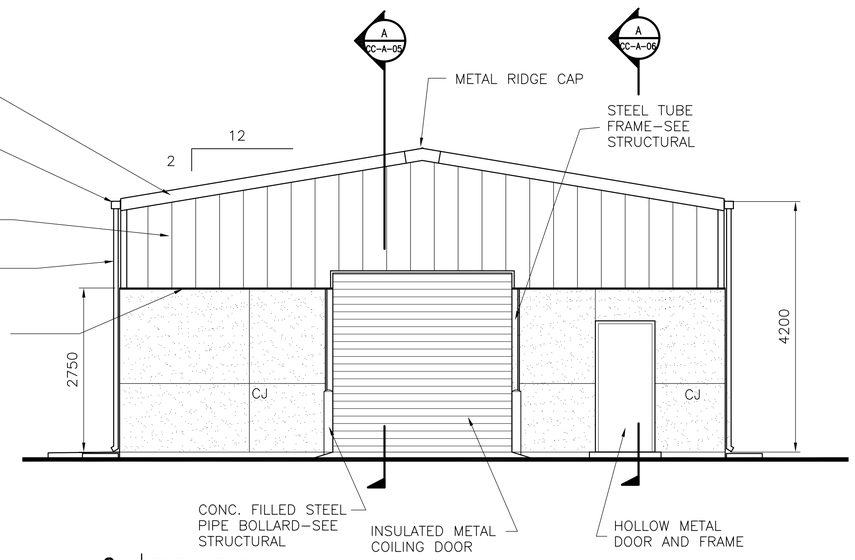

2 ELEVATION

CC-A-01 REF. SCALE: 1:50

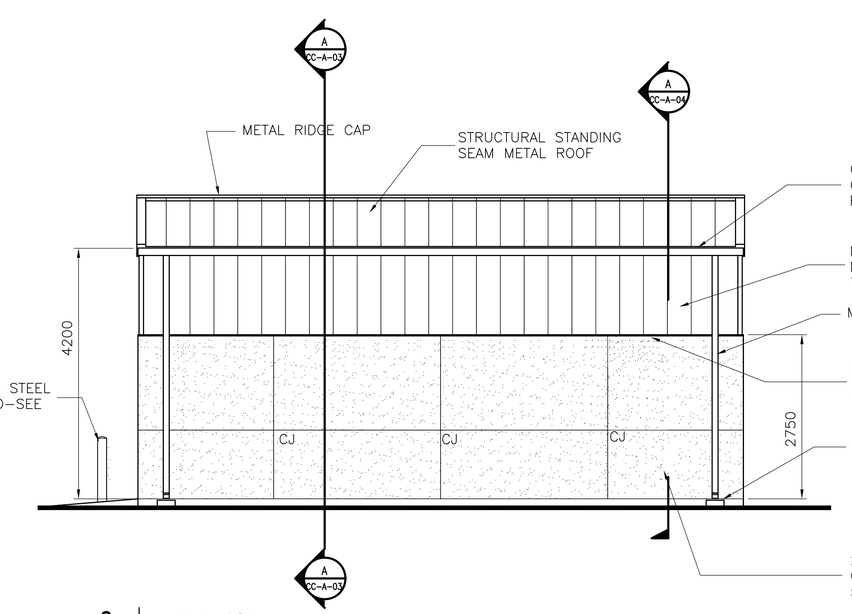

3 ELEVATION

CC-A-01 REF. SCALE: 1:50

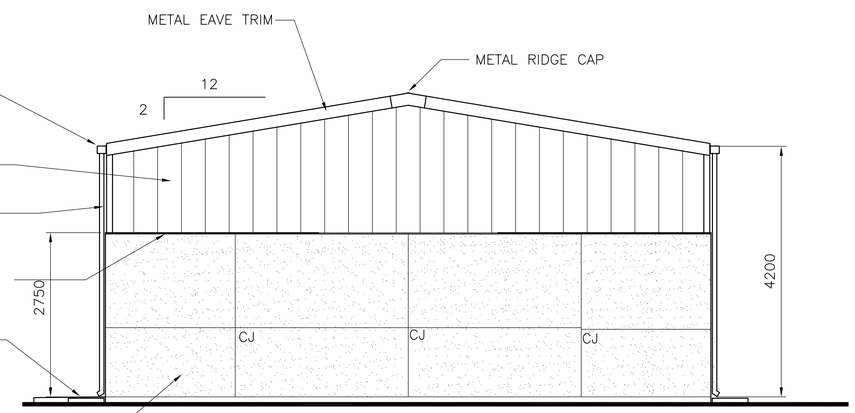

4 ELEVATION

CC-A-01 REF. SCALE: 1:50

GRAPHIC SCALE:

1000 0 1000mm

SCALE: 1 = 50

UNLESS OTHERWISE NOTED, LINEAR DIMENSIONS SHOWN ARE IN MILLIMETERS.

SYMBOL	DESCRIPTION	DATE	APR

Date: 10 MAY 2007
File No. AF0707
I.S.O. Sheet File Name: AF0707CC-AR02EL.dwg
Solicitation Number: –
Designed By:
Drawn By:
Checked By:

US Army Corps of Engineers Transatlantic Programs Center

ANA REGIONAL BRIGADE
PAKTIKA, AFGHANISTAN
EMBEDDED TRAINING FACILITY
STORAGE BUILDING

EXTERIOR ELEVATIONS

SHEET REFERENCE NUMBER:
CC–A–02

$DATE$
$FILE$

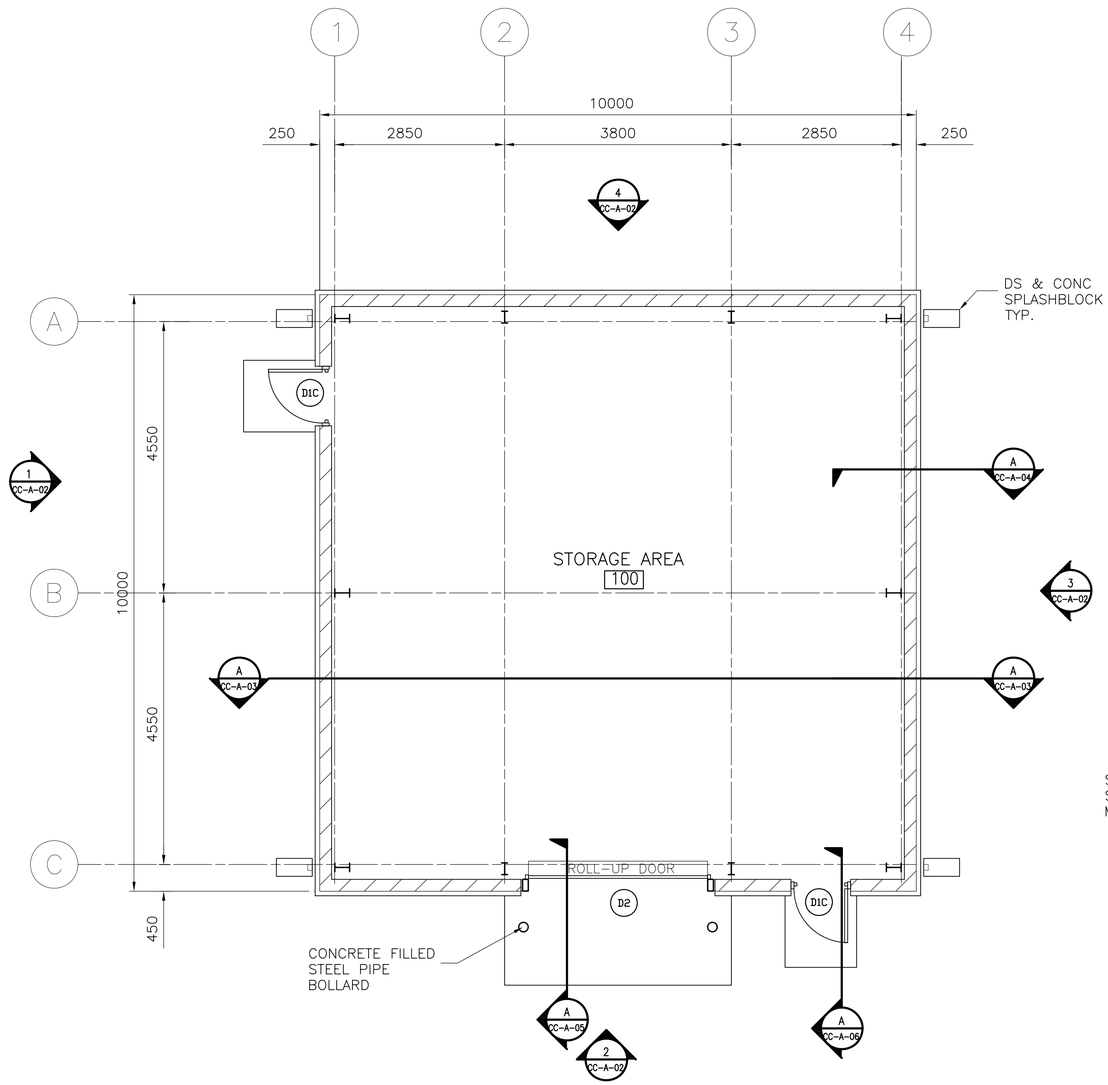

STORAGE–FLOOR PLAN

SCALE: 1:50

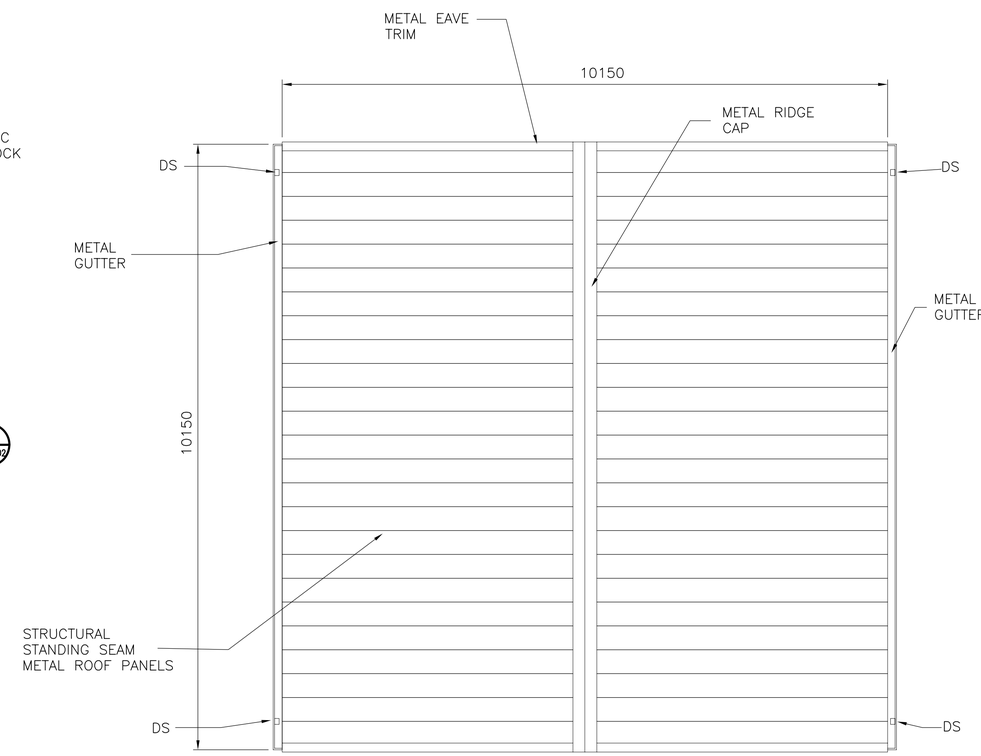

STORAGE–ROOF PLAN

SCALE: 1:50

1000 0 1000mm

SCALE: 1 = 50

UNLESS OTHERWISE NOTED, LINEAR DIMENSIONS SHOWN ARE IN MILLIMETERS.

SYMBOL	DESCRIPTION	DATE	APP.

Date: 10 MAY 2007

File No. AF0707

I.S.O. Sheet File Name: AF0707CC–AR01PN.dwg

Solicitation Number: –

Designed By:

Drawn By:

Checked By:

US Army Corps of Engineers Transatlantic Programs Center

ANA REGIONAL BRIGADE

PAKTIKA, AFGHANISTAN

EMBEDDED TRAINING FACILITY

STORAGE BUILDING

FLOOR & ROOF PLANS

SHEET REFERENCE NUMBER:

CC–A–01

$DATE$
$FILE$

ARCHITECTURAL ABBREVIATIONS

A	
ABOVE FINISH FLOOR	AFF
ACCESS PANEL	AP
ACOUSTIC	ACOUS (ACST)
ACTIVE LEAF	A/L
AGGREGATE	AGG
AIR CONDITIONING	A/C
ALUMINUM	ALUM (AL)
ANCHOR BOLT	AB
AND	&
ANGLE	∠ (ANG)
ARCHITECTURAL	ARCH
AREA INLET	AI.
ASPHALT	ASPH
AT	@
AUTOMATIC	AUTO
B	
BACK OF WALL	BOW
BATTEN INSULATION	BATT INSUL
BEAM	BM
BEARING	BRG
BITUMINOUS	BIT (BITUM)
BLOCK	BLK
BLOCKING	BLKG
BOARD	BD
BOTTOM	BOT (BOTT)
BRACING	BRCG
BRACKET	BRKT
BUILDING	BLDG
C	
CABINET	CAB
CAST IRON	CI
CATCH BASIN	CB
CEILING	CLG
CEMENT	CEM
CENTER	CTR
CENTER LINE	℄ OR CL
CENTER TO CENTER	CC
CERAMIC TILE	CT
CIRCULAR	CIR
CLEANOUT	CO
CLEAR	CLR
CLOSET	CLO
COLUMN	COL
CONCRETE	CONC
CONCRETE MASONRY UNITS	CMU
CONNECTION	CONN
CONSTRUCTION	CONSTR
CONSTRUCTION JOINT	CONSTR JT
CONTINUOUS	CONT.
CONTROL JOINT	CJ
CORNER	COR
CORRIDOR	CORR
COUNTER	CNTR
COUNTER SUNK	CSK
D	
DAMPPROOFING	DP
DETAIL	DET (DETL)
DIAGONAL	DIAG
DIAMETER	DIA
DIMENSION	DIM
DISPENSER	DISP
DOOR	DR
DOUBLE	DBL
DOWN	DN
DRAWER	DWR
DRAWING	DWG
DRINKING FOUNTAIN	DF
E	
EACH	EA
ELECTRICAL OR ELECTRIC	ELEC
ELEVATION	EL.
EMERGENCY	EMERG
ENCLOSURE	ENCL
ENTRANCE	ENTR
EQUIPMENT	EQUIP (EQPT)
EQUAL	EQ
EXHAUST	EXH
EXISTING	EXIST.
EXPANSION	EXPN
EXPANSION JOINT	EJ (EXP JT)
EXTERIOR	EXT
F	
FACE OF CONCRETE	FOC
FACE OF FINISH	FOF
FACE OF MASONRY	FOM
FACE OF WALL	FOW
FINISH	FIN.
FIRE HYDRANT	FH
FIXTURE	FIX
FLASHING	FLASH
FLOOR	FLR OR FL
FLOOR DRAIN	FD
FLOORING	FLG
FOOTING	FTG
FOUNDATION	FDN
FRAME	FR
FINISH FLOOR LINE	FFL
FIRE EXTINGUISHER	FE
G	
GAGE OR GAUGE	GA
GALVANIZED	GALV
GALVANIZED IRON	GI
GAS	G
GRID LINE	GL
GLAZED WALL TILE	GWT
GRADE	GR
GROUND	GND
GROUND CLEANOUT	GCO
GYPSUM	GYP
GYPSUM WALLBOARD	GYP BD (GWB)
H	
HANDRAIL	HDR
HARDBOARD	HBD
HARDWARE	HDW (HW)
HEAD	HD
HEATER	HTR
HEIGHT	HT (HGT)
HIGH POINT	H.PT.
HOLLOW METAL	HM
HORIZONTAL	HORIZ
HOSE BIBB	HB
I	
INSIDE DIAMETER	I.D.
INSULATION	INSUL.
INTERIOR	INT (INTR)
J	
JANITOR	JAN
JOINT	JT
JOIST	JST
K	
KEY LOCK	KL
KICK PLATE	KP
L	
LABORATORY	LAB
LAMINATE	LAM
LAVATORY	LAV
LIGHT	LT
LIGHTING	LTG
LOW POINT	LP
LUMBER	LBR
LOUVER	LVR
M	
MACHINE	MACH
MAINTENANCE	MAINT
MASONRY OPENING	MO
MASONRY UNIT	MU
MASTIC	MSTC
MATERIAL	MATL
MAXIMUM	MAX
MECHANICAL	MECH
METAL	MET
METAL BUILDING MANUFACTURER	MBM
MINIMUM	MIN
MIRROR	MIR
MISCELLANEOUS	MISC
MONOLITHIC	MONO
N	
NORTH	N
NOT IN CONTRACT	NIC
NUMBER	NO. (#)
NOT TO SCALE	NTS
O	
OFFICE	OFF.
ON CENTER	OC
OPENING	OPNG
OPPOSITE	OPP
OUTSIDE DIAMETER	O.D.
P	
PANEL	PNL
PAPER TOWEL DISPENSER	PTD
PAPER TOWEL DISPENSER & RECEPTACLE	PTD/R
PAPER TOWEL RECEPTACLE	PTR
PARTITION	PRTN
PLASTER	PLAST
PLATE	PL OR P
PLUMBING	PLBG
PLYWOOD	PLY WD
PRECAST	PRCST
Q	
QUARRY TILE	Q.T.
QUARTERS	QTRS
R	
RADIUS	RAD
RECEPTACLE	RECP
REFERENCE	REF
REFRIGERATOR	REFR
REINFORCEMENT	REINF
REQUIRED	REQD
REVISIONS	REV
RISER	R
ROOFING	RFG
ROOM	RM
ROUGH	RGH
S	
SANITARY NAPKIN DISPENSER	SND
SANITARY NAPKIN RECEPTACLE	SNR
SCHEDULE	SCH
SEAT COVER DISPENSER	SCD
SERVICE SINK	SSK
SHEATHING	SHTHG
SHEET	SHT.
SHEET METAL	SHT. MET.
SHOWER	SHR
SIMILAR	SIM
SOAP DISPENSER	SD
SOLID CORE	SC
SOUTH	S
SPEAKER	SPKR
SPECIFICATION	SPEC
SPLASH BLOCK	SB
SQUARE	SQ OR ◻
STANDARD	STD
STEEL	STL
STORAGE	STOR
STRUCTURAL	STRL
SUSPENDED	SUSP
SYMMETRICAL	SYM
T	
TELEPHONE	TEL
TEMPERATURE	TEMP
TEMPERED GLASS	T
TERRAZZO	TER
THICK	THK
TOILET PAPER DISPENSER	TPD
TOP OF CONCRETE	TOC
TOP OF CURB	TC
TOP OF PAVEMENT	TP
TOP OF STEEL	TOS
TOP OF WALL	TW
TOPOGRAPHY	TOPO
TYPICAL	TYP
U	
UNLESS OTHERWISE NOTED	UON
URINAL	UR
V	
VENTILATOR	VENT
VENT THRU ROOF	VTR
VERTICAL	VERT
VESTIBULE	VEST
W	
WATER CLOSET	WC
WEIGHT	WT
WELDED WIRE FABRIC	WWF
WINDOW	W/
WITH	W/
WITHOUT	W/O
WOOD	WD

SYMBOLS

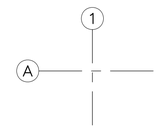

GRID LINES

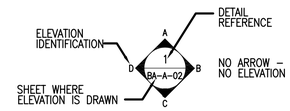

INTERIOR ELEVATION

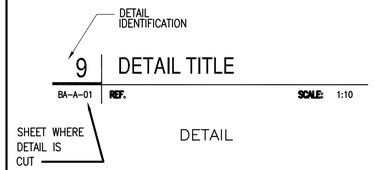

DETAIL

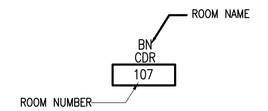

ROOM IDENTIFICATION

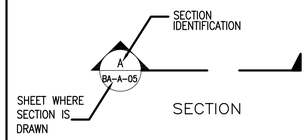

SECTION

DOOR NUMBER

WINDOW NUMBER

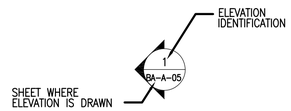

EXTERIOR ELEVATION

LOUVER NUMBER

MATERIAL LEGEND

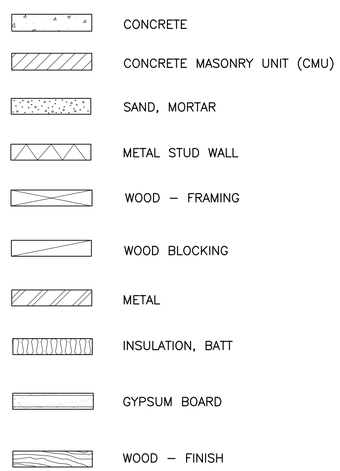

GENERAL NOTES:

UNLESS OTHERWISE NOTED, LINEAR DIMENSIONS SHOWN ARE IN MILLIMETERS.

SYMBOL	DESCRIPTION	DATE	APP.

Designed By: R. BROWN
Drawn By: D. GRIFFIN
Checked By: R. BROWN
Date: 10 MAY 2007
File No. AF0707
I.S.O. Sheet File Name: AF0707CC–AROOGN.dwg
Solicitation Number: –
B. THOMAS

US Army Corps of Engineers
Transatlantic Programs Center

ANA REGIONAL BRIGADE
PAKTIKA, AFGHANISTAN
EMBEDDED TRAINING FACILITY
STORAGE BUILDING
ABBREVIATIONS & SYMBOLS
–

SHEET REFERENCE NUMBER:
CC–A–00

$DATE$
$FILE$

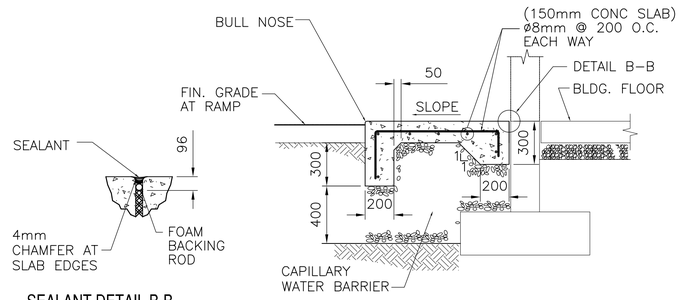

SEALANT DETAIL B-B

SECTION A-A

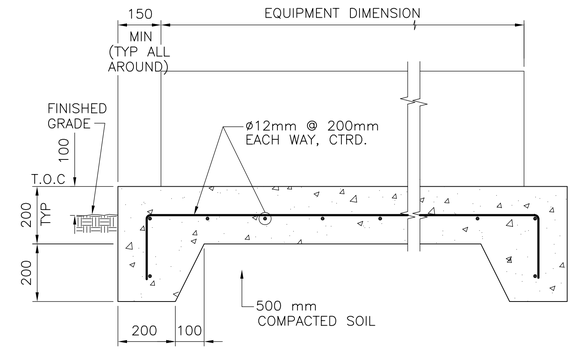

TYPICAL ALL AROUND PERIMETER

NOTE:
PAD DIMENSIONS, ANCHOR BOLT SIZE AND LOCATIONS, AND OTHER EMBEDDED ITEMS SHALL CONFORM TO EQUIPMENT MANUFACTURER'S REQUIREMENTS.

2 CONCRETE PAD FOR EXTERIOR EQUIPMENT

CC-SS-04 REF. SCALE: 1:10

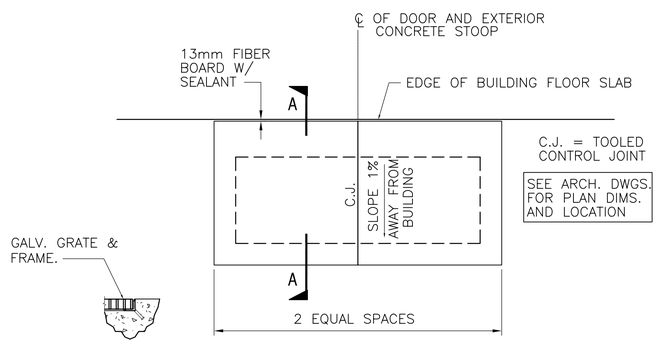

DETAIL D-D

EXTERIOR STOOPS

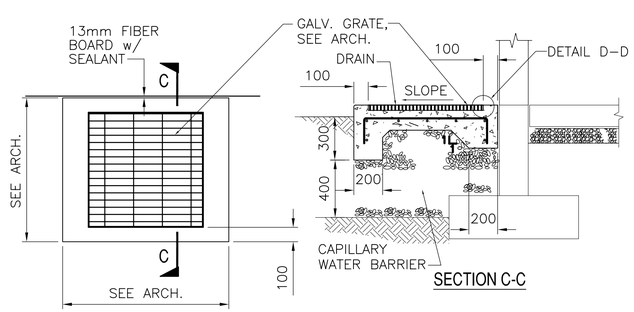

SECTION C-C

EXTERIOR STOOPS w/ GALVANIZED GRATE

1 CONCRETE STOOP/RAMP DETAILS

CC-SS-04 REF. SCALE: 1:20

200 0 200mm
SCALE: 1 = 10

UNLESS OTHERWISE NOTED, LINEAR DIMENSIONS SHOWN ARE IN MILLIMETERS.

SYMBOL	DESCRIPTION	DATE	APP

Designed By: D. SMITH
Drawn By: D. SMITH
Checked By: M. THOMPSON
Date: 10 MAY 2007
File No. AF0707
I.S.D. Sheet File Name: AF0707CC-SS04DT.DWG
Solicitation Number: -

US Army Corps of Engineers
Transatlantic Programs Center

ANA REGIONAL BRIGADE
PAKTIKA, AFGHANISTAN
EMBEDDED TRAINING FACILITY
STORAGE BUILDING

MISCELLANEOUS EXTERIOR CONCRETE PAD DETIALS

SHEET REFERENCE NUMBER:
CC-SS-04

$DATE$
$FILE$

D SIZE BORDER
32 X 20.5

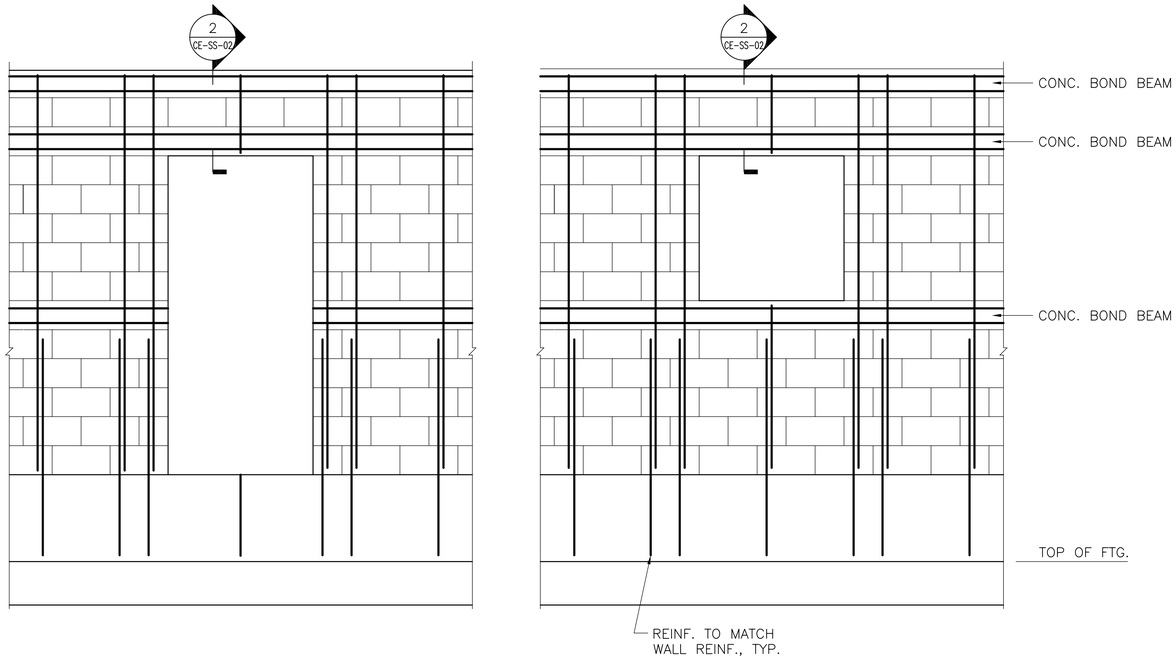

1 | CMU WALL PARTIAL ELEVATION

CE-SS-02 REF. SCALE: 1:20

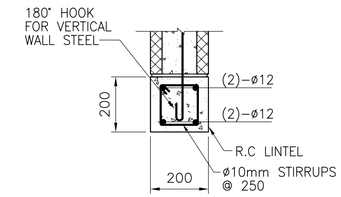

2 | LINTEL SECTION

CE-SS-02 REF. SCALE: 1:10

SYMBOL	DESCRIPTION	DATE	APR.

Designed By:
Drawn By:
Checked By:
Date: 10 MAY 2007
File No. AF0707
U.S.O. Sheet File Name: AF0707CE-SS02D1.DWG
Solicitation Number: –

US Army Corps of Engineers Transatlantic Programs Center

ANA REGIONAL BRIGADE
PAKTIKA, AFGHANISTAN
EMBEDDED TRAINING FACILITY
DFAC 2

TYPICAL MASONRY DETAILS

SHEET REFERENCE NUMBER:
CE-SS-02

UNLESS OTHERWISE NOTED, LINEAR DIMENSIONS SHOWN ARE IN MILLIMETERS.

$DATE$
$FILE$

D SIZE BORDER
32 X 20.5

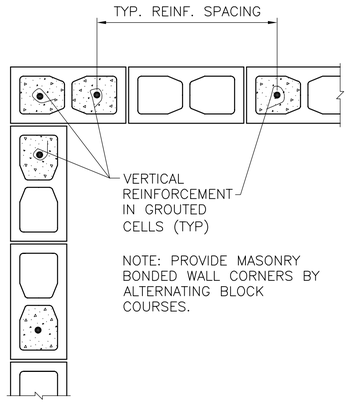

1 TYPICAL CMU CORNER WALL REINFORCING DETAIL

CE-SS-01 REF. SCALE: 1:10

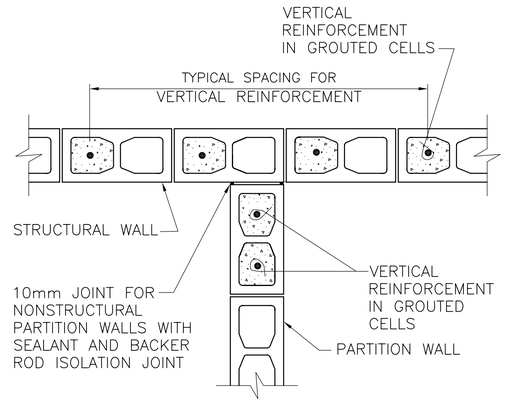

2 TYPICAL CMU PARTITION WALL REINFORCING DETAIL

CE-SS-01 REF. SCALE: 1:10

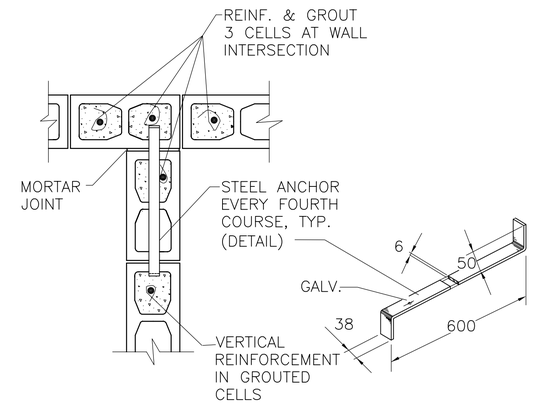

3 TYPICAL CMU STRUCTURAL WALL REINFORCING DETAIL

CE-SS-01 REF. SCALE: 1:10

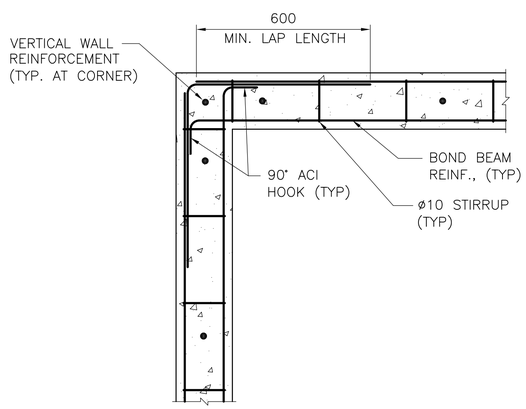

4 TYPICAL CIP CONCRETE BOND BEAM REINFORCING DETAIL

CE-SS-01 REF. SCALE: 1:10

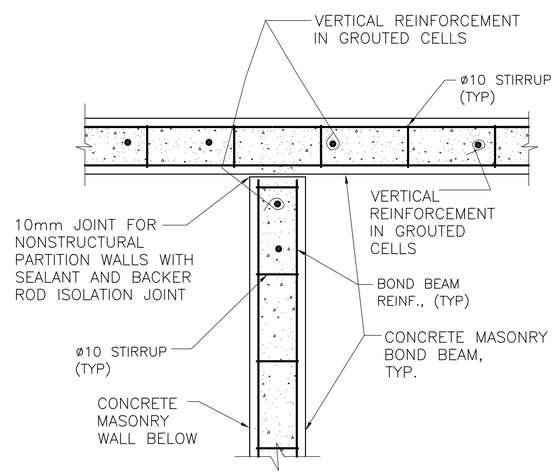

5 TYPICAL CIP CONCRETE BOND BEAM REINFORCING DETAIL

CE-SS-01 REF. SCALE: 1:10

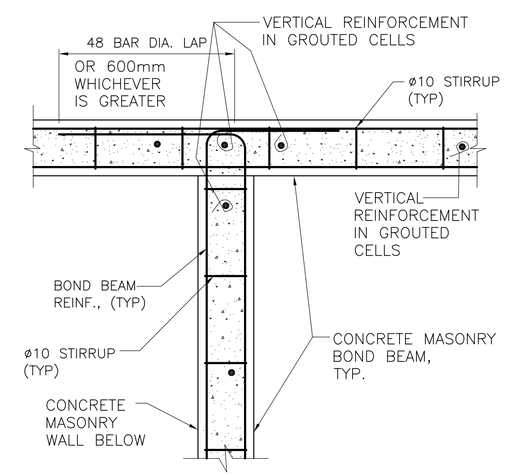

6 TYPICAL CIP CONCRETE BOND BEAM REINFORCING DETAIL

CE-SS-01 REF. SCALE: 1:10

UNLESS OTHERWISE NOTED, LINEAR DIMENSIONS SHOWN ARE IN MILLIMETERS.

SYMBOL	DESCRIPTION	DATE	APR.

Designed By:
Drawn By:
Checked By:
Date: 10 MAY 2007
File No. AF0707
F.S.O. Sheet File Name: AF0707CE-SS01DT.DWG
Solicitation Number: –

US Army Corps of Engineers Transatlantic Programs Center

ANA REGIONAL BRIGADE
PAKTIKA, AFGHANISTAN
EMBEDDED TRAINING FACILITY
DFAC 2

TYPICAL MASONRY DETAILS

SHEET REFERENCE NUMBER:
CE-SS-01

$DATE$
$FILE$

D SIZE BORDER
32 X 20.5

GENERAL:

1. CONTRACTOR SHALL VERIFY ALL DIMENSIONS AND CONDITIONS AFFECTING THE WORK AT JOBSITE.

2. ALL STRUCTURAL WORK AND MATERIALS SHALL CONFORM TO THE REQUIREMENTS OF THE PROJECT SPECIFICATIONS.

3. FOR LOCATION AND DIMENSIONS OF GROOVES, REGLETS, SLEEVES, OPENINGS, AND EMBEDDED OR ATTACHED ITEMS, REFER TO ARCHITECTURAL, MECHANICAL, ELECTRICAL, AND PIPING DRAWINGS.

CODES:

1. ALL PARTS SHALL BE FURNISHED AND ERECTED ACCORDING TO THE APPLICABLE CODES AND SPECIFICATIONS OF THE FOLLOWING:

AMERICAN CONCRETE INSTITUTE	(ACI)
AMERICAN INSTITUTE OF STEEL CONSTRUCTION	(AISC)
AMERICAN IRON AND STEEL INSTITUTE	(AISI)
AMERICAN WELDING SOCIETY	(AWS)
MINIMUM DESIGN LOADS FOR BUILDINGS AND OTHER STRUCTURES	(ASCE)
INTERNATIONAL BUILDING CODE	(IBC)

DESIGN LOADS:

1. ROOF LOADING

A. LIVE LOAD 100 KG/SQ METER (20 PSF)
B. SNOW LOAD 75 KG/SQ METER (15 PSF)
C. COLLATERAL LOAD 50 KG/SQ METER (10 PSF)

2. WIND LOADING

A. BASIC WIND SPEED 145 KM/HR (90 MPH)
B. EXPOSURE CATEGORY "B"
C. IMPORTANCE FACTOR, Iw = 1.00
D. BUILDING CATEGORY "II"

3. SEISMIC LOADING:

A. Ss = 1.28g
B. S1 = 0.51g
C. SEISMIC USE GROUP "I"
D. SITE CLASSIFICATION "D"
E. IMPORTANCE FACTOR I = 1.0

BASIC SEISMIC FORCE RESISTING SYSTEM:

LOAD BEARING CMU WALL SYSTEM WITH SPECIAL REINFORCED MASONRY SHEAR WALLS

DESIGN BASE SHEAR: 0.17W

ANALYSIS PROCEDURE: EQUIVALENT LATERAL FORCE METHOD

FOUNDATIONS:

1. ALL FOOTINGS SHALL BEAR ON SOIL CAPABLE OF SUSTAINING THE LOADS.

2. CONTINUOUS WALL FOOTINGS WERE DESIGNED FOR A SOIL BEARING CAPACITY OF 9765 KG/SQ. METER (2000 PSF). ISOLATED COLUMN FOOTINGS WERE DESIGNED FOR A MAXIMUM BEARING CAPACITY OF 9765 KG/SQ. METER (2000 PSF).

3. ELEVATIONS SHOWN ON PLANS FOR TOP OF FOOTINGS ARE MINIMUM DEPTH. DIFFERENT OR UNUSUAL CONDITIONS SHALL BE REPORTED TO THE CONTRACTING OFFICER.

4. ALL FOOTING REINFORCEMENT SHALL BE SECURELY SUPPORTED ABOVE GROUND. CONCRETE BLOCK AND BROKEN TILE SHALL NOT BE USED. CONCRETE OR CLAY BRICK MAY BE USED.

CONCRETE

1. STRUCTURAL CONCRETE FOR THE BUILDING STRUCTURE SHALL HAVE THE FOLLOWING PROPERTIES:

FOOTINGS: f'c = 210 KG/SQ. CM (3,000 PSI) AT 28 DAYS
SLABS: f'c = 210 KG/SQ. CM (3,000 PSI) AT 28 DAYS

2. ALL REINFORCING STEEL SHALL BE DEFORMED BARS CONFORMING TO ASTM A615 GRADE 60 UNLESS NOTED OTHERWISE.

3. LOCATION OF ALL CONCRETE JOINTS, OTHER THAN THOSE SPECIFIED, SHALL BE APPROVED BY THE CONTRACTING OFFICER BEFORE CONCRETE PLACEMENT.

4. MINIMUM PROTECTIVE COVER OF REINFORCEMENT (SEE DETAILS) SHALL BE AS FOLLOWS:

FOOTINGS, 75mm CLEAR BOTTOM AND SIDES, 40mm CLEAR TOP.
CONCRETE SLABS-ON-GRADE, 25mm CLEAR TOP.
WALLS, 40mm CLEAR SIDES.
CONCRETE PIERS, 40mm CLEAR TO TIES.
CONCRETE BOND BEAMS. 20mm CLEAR TO TIES.

5. MINIMUM CONCRETE SPLICES AND HOOKS FOR REINFORCING STEEL SHALL CONFORM TO ACI 318, CURRENT EDITION.

6. CONCRETE WORK SHALL BE COORDINATED WITH DRAINS, UNDERGROUND UTILITIES, MECHANICAL, ELECTRICAL, AND ARCHITECTURAL PLANS. CONCRETE SHALL NOT BE CAST UNTIL THESE ITEMS HAVE BEEN INSTALLED AND ACCEPTED.

7. CONCRETE FINISHES SHALL BE PROVIDED AS DESCRIBED IN THE SPECIFICATIONS.

8. CORNER BARS SHALL BE PROVIDED AT ALL INTERSECTIONS; BAR SIZE AND SPACING TO MATCH LARGER BAR.

9. SLABS ON GRADE SHALL BE REINFORCED AT ALL PENETRATIONS AND RE-ENTRANT CORNERS. PLACE 3-ø10 x 1.0 METER AROUND FLOOR DRAINS. PLACE 2-ø12 x 1.0 METER (MINIMUM) AT RE-ENTRANT CORNERS.

STRUCTURAL STEEL:

1. STRUCTURAL STEEL SHALL BE FABRICATED AND ERECTED IN ACCORDANCE WITH THE AMERICAN INSTITUTE OF STEEL CONSTRUCTION, "SPECIFICATION FOR STRUCTURAL STEEL BUILDINGS", 1989 (AISC ASD MANUAL, 9TH EDITION).

2. STEEL SHALL CONFORM TO THE FOLLOWING REQUIREMENTS UNLESS NOTED OTHERWISE:

MISCELLANEOUS PLATES AND ANGLES – ASTM A36 (Fy = 36 KSI)
RECTANGULAR HSS – ASTM A500, GRADE B (Fy = 46 KSI)
"W" SHAPES – ASTM A992

3. NO STRUCTURAL STEEL SHALL BE FABRICATED OR ERECTED UNTIL SHOP DRAWINGS HAVE BEEN APPROVED.

4. NO HOLES OTHER THAN THOSE SPECIFICALLY DETAILED SHALL BE ALLOWED THROUGH STRUCTURAL STEEL MEMBERS. CUTTING OF STEEL SHALL NOT BE PERMITTED WITHOUT APPROVAL OF THE CONTRACTING OFFICER.

5. THE CONTRACTOR SHALL VERIFY ALL SHOP DRAWING DIMENSIONS WITH THE STRUCTURAL AND ARCHITECTURAL PLANS AND DETAILS, AND WITH FIELD DIMENSIONS OF COLUMN LAYOUT.

7. BOLTED CONNECTIONS SHALL BE MADE WITH HIGH STRENGTH BOLTS CONFORMING TO ASTM A325, 20mm DIAMETER MINIMUM UNLESS NOTED OTHERWISE.

8. CONNECTIONS NOT SHOWN ON DRAWINGS SHALL BE DESIGNED BY THE FABRICATOR. CONNECTIONS SHALL BE SELECTED TO SUPPORT ONE HALF THE TOTAL UNIFORM LOAD CAPACITY SHOWN IN THE ALLOWABLE LOAD TABLES, PART 2 OF LATEST AISC MANUAL FOR THE GIVEN BEAM, SPAN, AND GRADE OF STEEL SPECIFIED. WHERE POSSIBLE, DOUBLE ANGLE CONNECTIONS SHALL BE USED.

MASONRY:

1. ENGINEERED MASONRY IS DESIGNED IN ACCORDANCE WITH "BUILDING CODE REQUIREMENTS FOR MASONRY STRUCTURES" (ACI 530-99/ ASCE 5-99/TMS 402-99).

2. UNITS: ASTM C90, TYPE (I) (NORMAL WEIGHT, MOISTURE CONTROLLED) (OR EQUIVALENT DIN, ACI OR EN STANDARDS) MORTAR: ASTM C270 TYPE S (OR EQUIVALENT DIN, ACI OR EN STANDARDS)

3. FULLY GROUT ALL CELLS CONTAINING REINFORCING STEEL OR ANCHORS UNLESS NOTED OTHERWISE.

4. USE 50 db FULL CONTACT LAP SPLICES FOR REINFORCING STEEL IN CMU WALLS UNLESS NOTED OTHERWISE.

5. SEE SPECIFICATION 04200 FOR MASONRY BLOCK. ALL VERTICAL CELLS OF MASONRY BLOCK WITH REINFORCING SHALL BE GROUTED SOLID TO FORM A COMPOSITE MASONRY AND STEEL ASSEMBLY.

6. PROVIDE AN ADDITIONAL VERTICAL REINFORCEMENT AT EACH SIDE OF INTERSECTION OF EXTERIOR WALLS, AND AT EACH SIDE OF ALL MASONRY OPENINGS GREATER THAN 250mm IN WIDTH. IN OPENINGS WIDER THAN 600mm, PROVIDE ADDITIONAL VERTICAL REINFORCEMENT IN TWO ADJACENT CELLS ON EACH SIDE OF THE OPENING. ADDED VERTICAL REINFORCEMENT SHALL BE CONTINUOUS FOR THE FULL HEIGHT OF WALL.

7. PROVIDE BOND BEAMS AT 1200mm MAXIMUM VERTICAL SPACING (EXCEPT AT RESTROOM AND SHOWER STALL PARTITION WALLS).

8. PROVIDE LINTEL ABOVE ALL MASONRY OPENINGS AS SHOWN IN DETAIL 3/SS-02.

9. PROVIDE A BOND BEAM BELOW ALL MASONRY OPENINGS AND EXTEND A MINIMUM OF 400mm BEYOND EACH SIDE OF OPENING.

TIMBER:

1. ALL TIMBER DESIGN AND CONSTRUCTION SHALL BE DONE IN ACCORDANCE WITH THE LATEST EDITION OF THE TIMBER CONSTRUCTION MANUAL OF THE AMERICAN INSTITUTE OF TIMBER CONSTRUCTION. ALL STRUCTURAL TIMBER MEMBERS SHALL HAVE THE FOLLOWING MINIMUM PROPERTIES:

A. BENDING	Fb = 74 Kg/CM (SINGLE MEMBER USE)
	Fb = 84 Kg/CM (REPETITIVE MEMBER USE)
B. TENSION	Ft = 49 Kg/CM (PARALLEL TO GRAIN)
C. SHEAR	Fv = 4 Kg/CM (HORIZONTAL SHEAR)
D. COMPRESSION	Fc = 21 Kg/CM (PERPENDICULAR TO GRAIN)
	Fc = 21 Kg/CM (PARALLEL TO GRAIN)
E. MODULUS OF ELASTICITY	E = 843,683 Kg/CM

UNLESS OTHERWISE NOTED, LINEAR DIMENSIONS SHOWN ARE IN MILLIMETERS.

SYMBOL	DESCRIPTION	DATE	APR

Designed By:
Drawn By:
Checked By:
Date: 10 MAY 2007
File No. AF0707
F.S.O. Sheet File Name: AF0707CE-SS000T.DWG
Solicitation Number: –

US Army Corps of Engineers Transatlantic Programs Center

ANA REGIONAL BRIGADE
PAKTIKA, AFGHANISTAN
EMBEDDED TRAINING FACILITY
DFAC 2

TYPICAL MASONRY DETAILS

SHEET REFERENCE NUMBER:
CE-SS-00

$DATE$
$FILE$

D SIZE BORDER
32 X 20.5

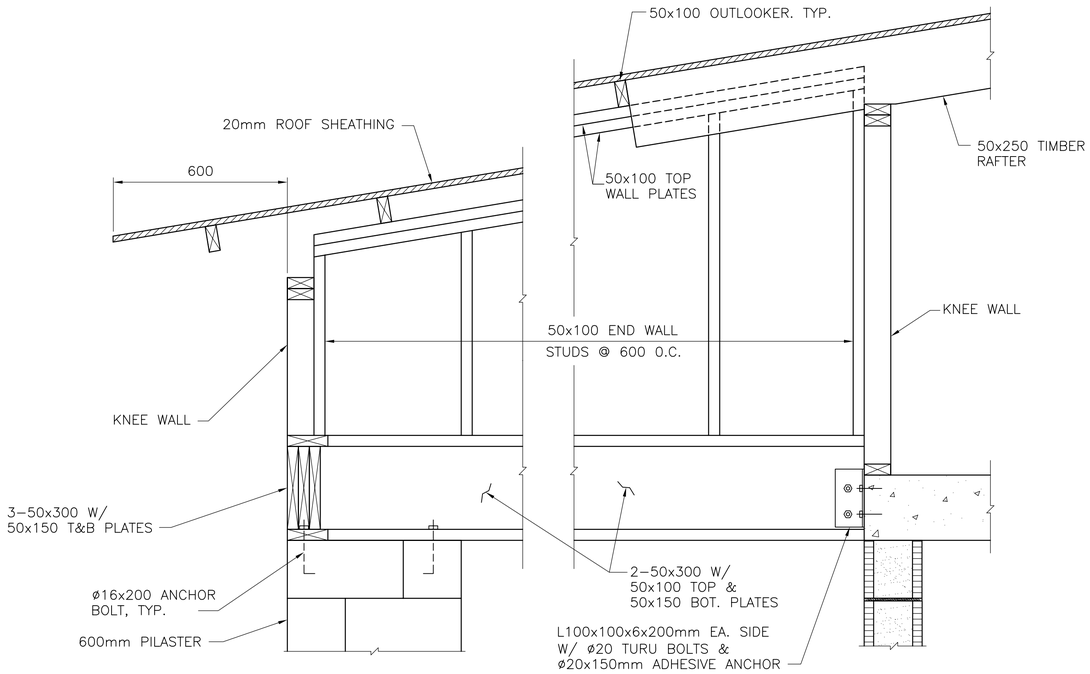

1 ROOF SECTION AT PORCH

CE–S–02 CE–S–03 REF. SCALE: 1:10

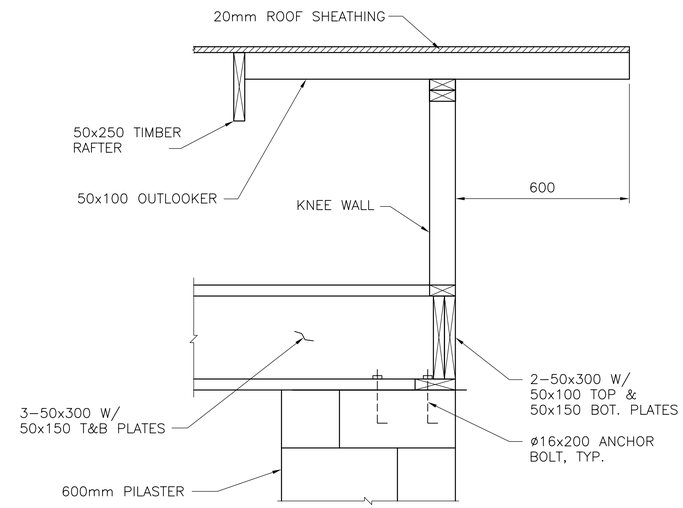

2 ROOF SECTION AT PORCH

CE–S–02 CE–S–03 REF. SCALE: 1:10

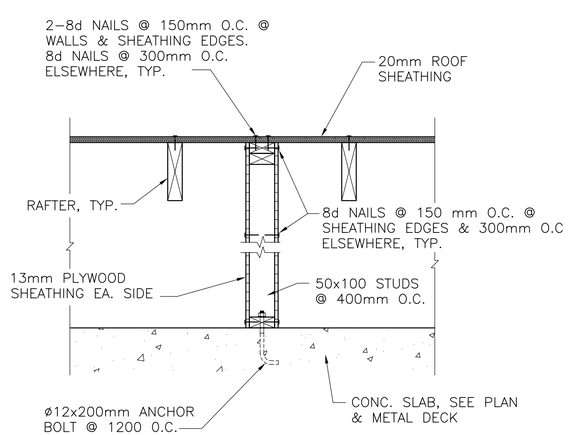

3 ROOF SECTION AT SHEAR WALL

CE–S–03 REF. SCALE: 1:10

200 0 200mm
SCALE: 1 = 10

UNLESS OTHERWISE NOTED, LINEAR DIMENSIONS SHOWN ARE IN MILLIMETERS.

SYMBOL	DESCRIPTION	DATE	APR.

Designed By:
Drawn By:
Checked By:
Date: 10 MAY 2007
File No. AF0707
F.S.O. Sheet File Name: AF0707CE–SF07SE.DWG
Solicitation Number: –

US Army Corps of Engineers
Transatlantic Programs Center

ANA REGIONAL BRIGADE
PAKTIKA, AFGHANISTAN
EMBEDDED TRAINING FACILITY
DFAC 2

FRAMING SECTIONS

SHEET REFERENCE NUMBER:
CE–S–07

$DATE$
$FILE$

D SIZE BORDER
32 X 20.5

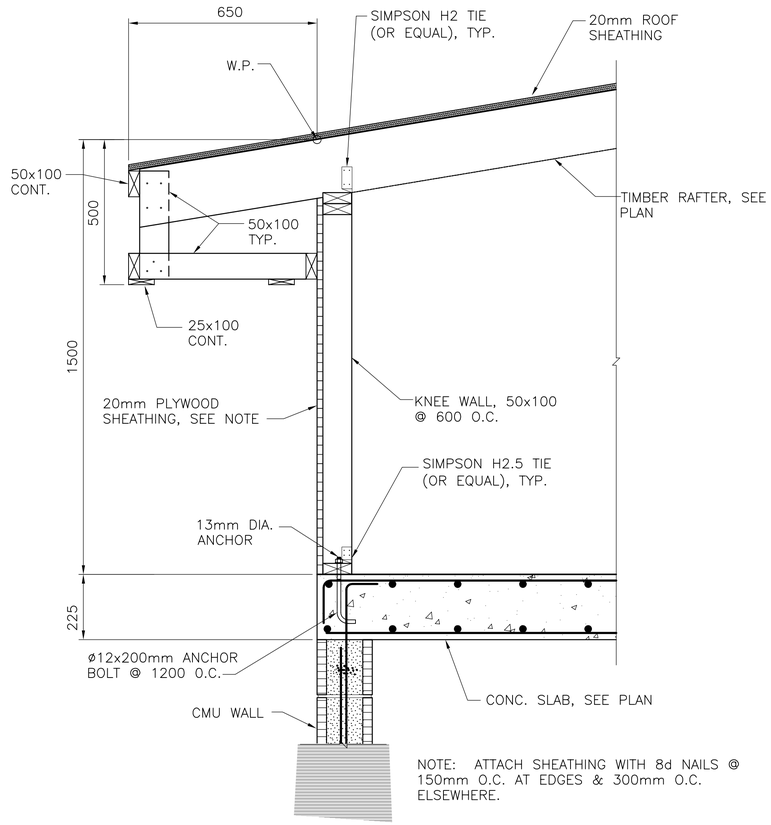

NOTE: ATTACH SHEATHING WITH 8d NAILS @ 150mm O.C. AT EDGES & 300mm O.C. ELSEWHERE.

1 ROOF SECTION AT EXTERIOR CMU WALL

CE-S-02 CE-S-03 | REF. | SCALE: 1:10

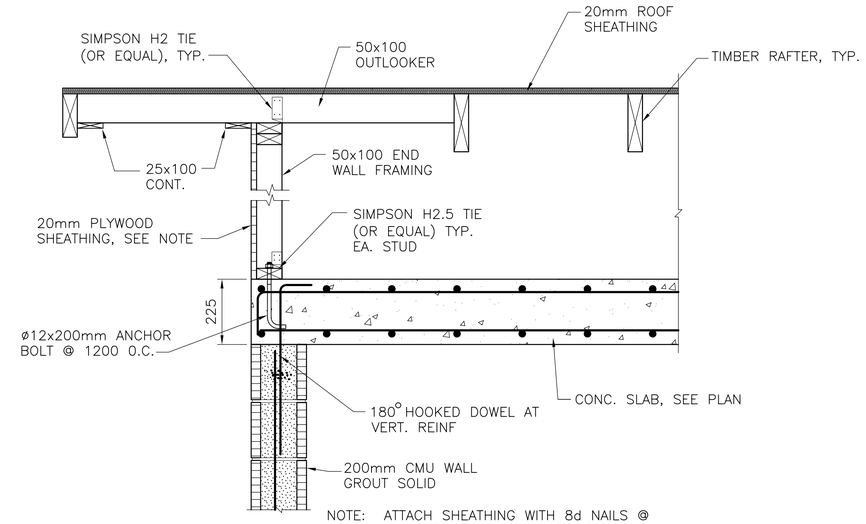

NOTE: ATTACH SHEATHING WITH 8d NAILS @ 150mm O.C. AT EDGES & 300mm O.C. ELSEWHERE.

2 ROOF SECTION AT EXTERIOR CMU WALL

CE-S-02 CE-S-03 | REF. | SCALE: 1:10

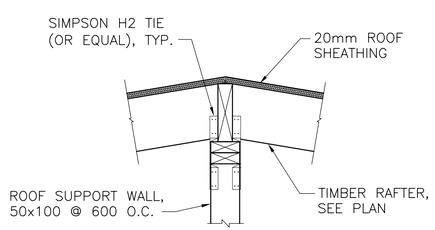

3 ROOF DETAIL

CE-S-03 | REF. | SCALE: 1:10

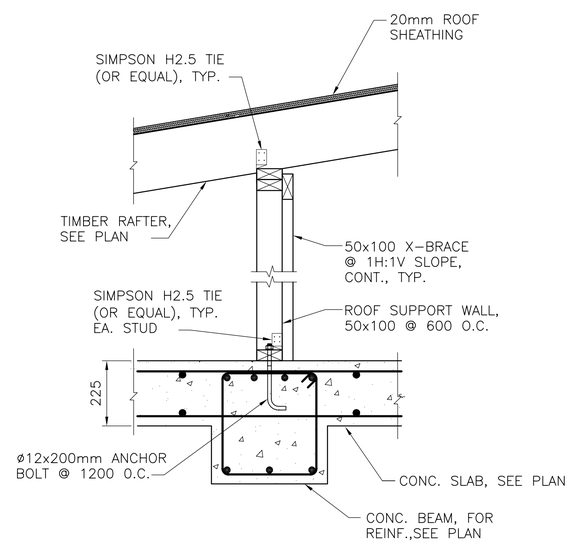

4 ROOF SECTION AT BEAM

CE-S-02 CE-S-03 | REF. | SCALE: 1:10

200 0 200mm
SCALE: 1 = 10

SCALE: SCALE
UNLESS OTHERWISE NOTED, LINEAR DIMENSIONS SHOWN ARE IN MILLIMETERS.

SYMBOL	DESCRIPTION	DATE	APPR.

Designed By:
Drawn By:
Checked By:
Date: 10 MAY 2007
File No. AF0707
F.S.O. Sheet File Name: AF0707CE-SF06SE.DWG
Solicitation Number: –

US Army Corps of Engineers Transatlantic Programs Center

ANA REGIONAL BRIGADE
PAKTIKA, AFGHANISTAN
EMBEDDED TRAINING FACILITY
DFAC 2

FRAMING SECTIONS

SHEET REFERENCE NUMBER:
CE-S-06

$DATE$
$FILE$

D SIZE BORDER
32 X 20.5

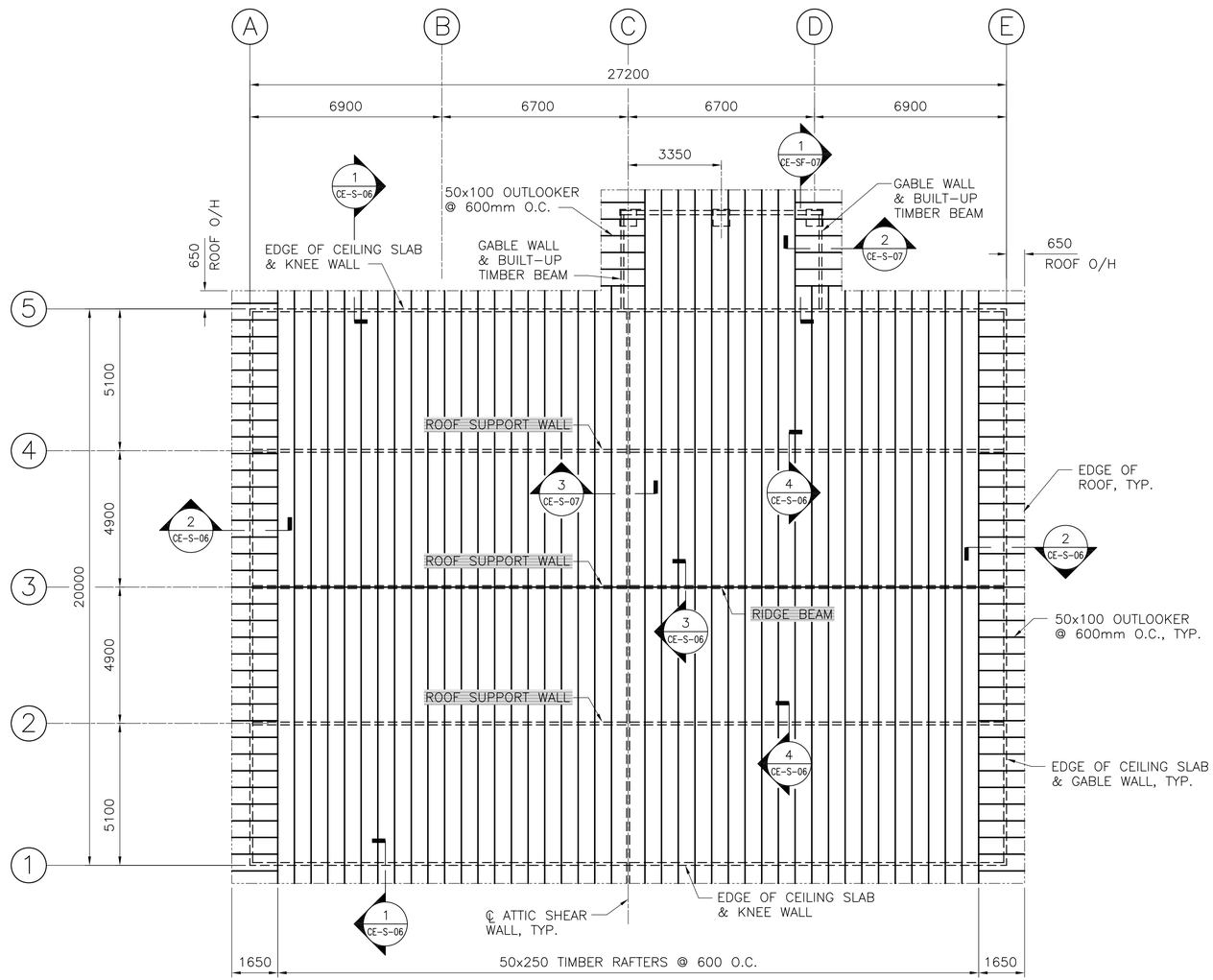

1 ROOF FRAMING PLAN

CE-S-01 REF. SCALE: 1:100

2000 0 2000mm
SCALE: 1 = 100

UNLESS OTHERWISE NOTED, LINEAR DIMENSIONS SHOWN ARE IN MILLIMETERS.

SYMBOL	DESCRIPTION	DATE	APR

Designed By:
Drawn By:
Checked By:
Date: 10 MAY 2007
File No. AF0707
I.S.O. Sheet File Name: AF0707CE-SF03PN.DWG
Solicitation Number: –

US Army Corps of Engineers Transatlantic Programs Center

ANA REGIONAL BRIGADE
PAKTIKA, AFGHANISTAN
EMBEDDED TRAINING FACILITY
DFAC 2

ROOF FRAMING PLAN

SHEET REFERENCE NUMBER:
CE-S-03

$DATE$
$FILE$

D SIZE BORDER
32 X 20.5

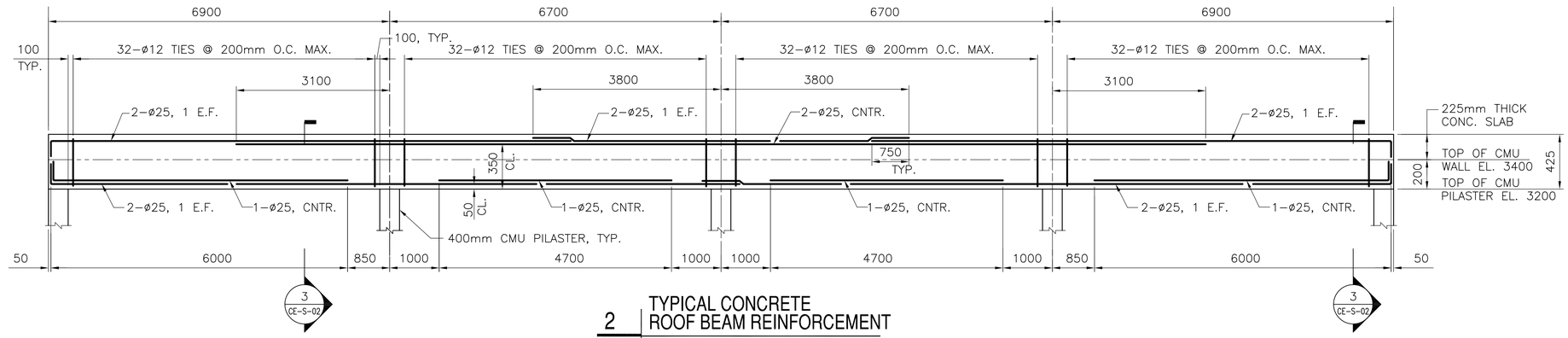

2 TYPICAL CONCRETE ROOF BEAM REINFORCEMENT

CE-S-01 REF. SCALE: N.T.S.

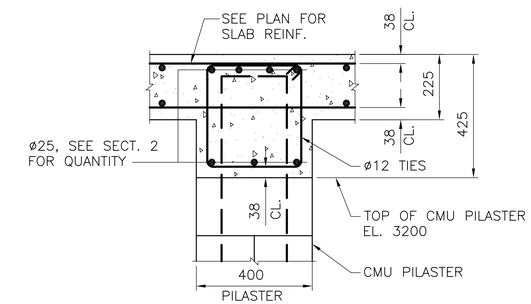

3 SECTION THROUGH BEAM

CE-S-01 REF. SCALE: 1:10

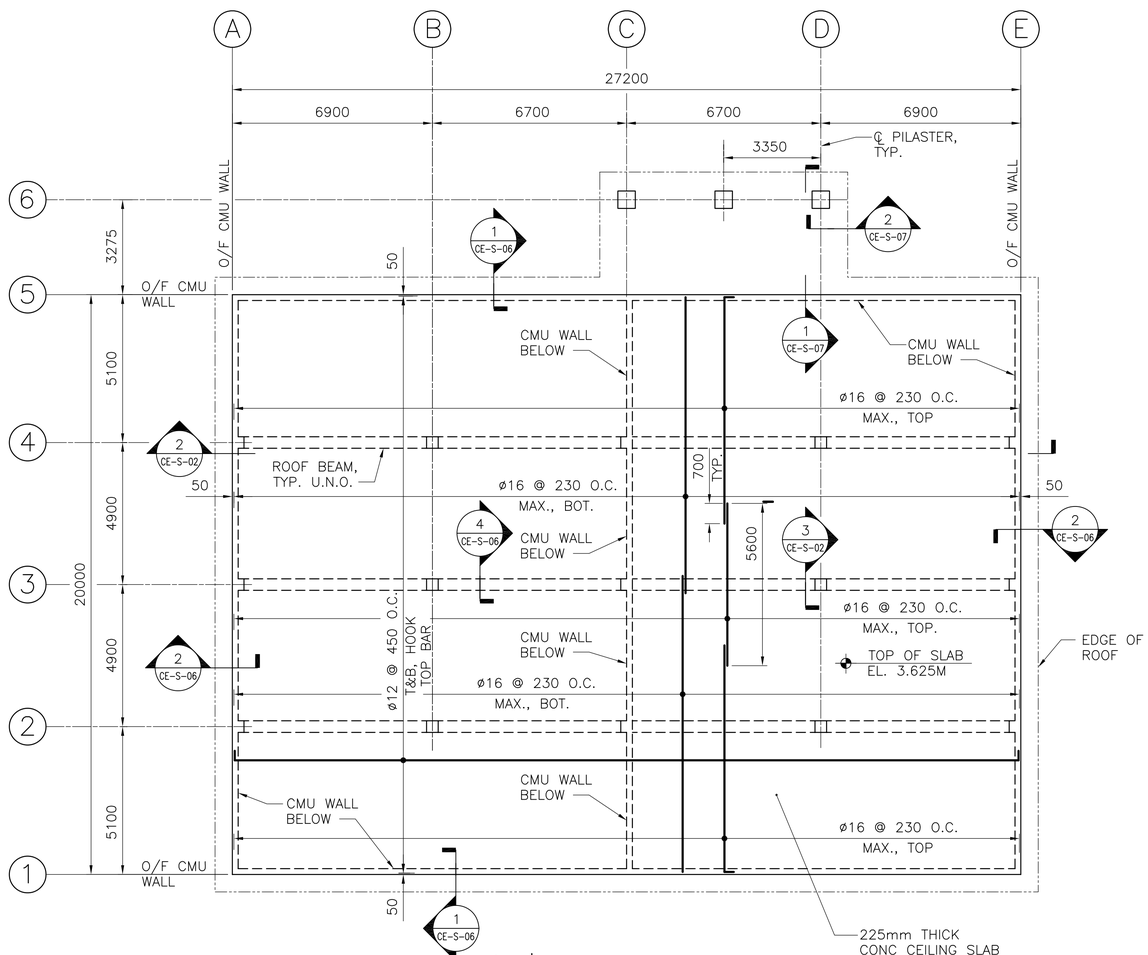

1 CEILING FRAMING PLAN

CE-S-01 REF. SCALE: 1:100

200 0 200mm
SCALE: 1 = 10

2000 0 2000mm
SCALE: 1 = 100

UNLESS OTHERWISE NOTED, LINEAR DIMENSIONS SHOWN ARE IN MILLIMETERS.

SYMBOL	DESCRIPTION	DATE	APR

Designed By:
Drawn By:
Checked By:
Date: 10 MAY 2007
File No. AF0707
I.S.O. Sheet File Name: AF0707CE-SF02PN.DWG
Solicitation Number: –

US Army Corps of Engineers Transatlantic Programs Center

ANA REGIONAL BRIGADE
PAKTIKA, AFGHANISTAN
EMBEDDED TRAINING FACILITY
DFAC 2

CEILING FRAMING PLAN

SHEET REFERENCE NUMBER:
CE–S–02

$DATE$
$FILE$

D SIZE BORDER
32 X 20.5

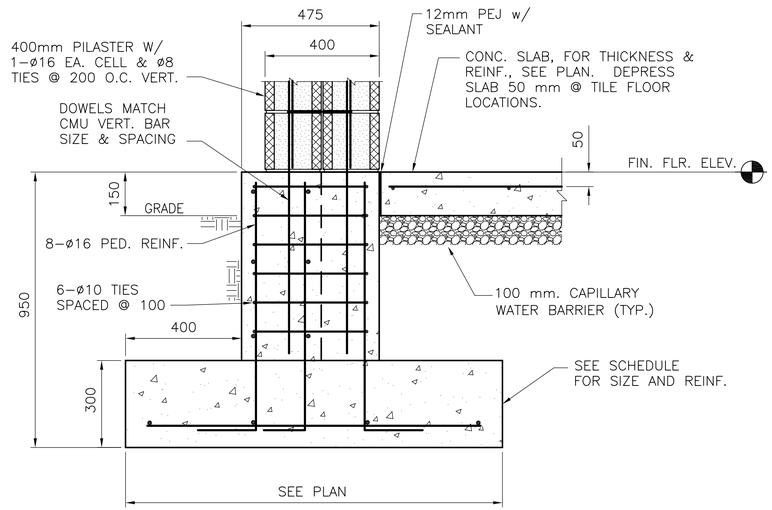

1 SECTION AT EXTERIOR CMU WALL PILASTER

CE–S–01 REF. SCALE: 1:10

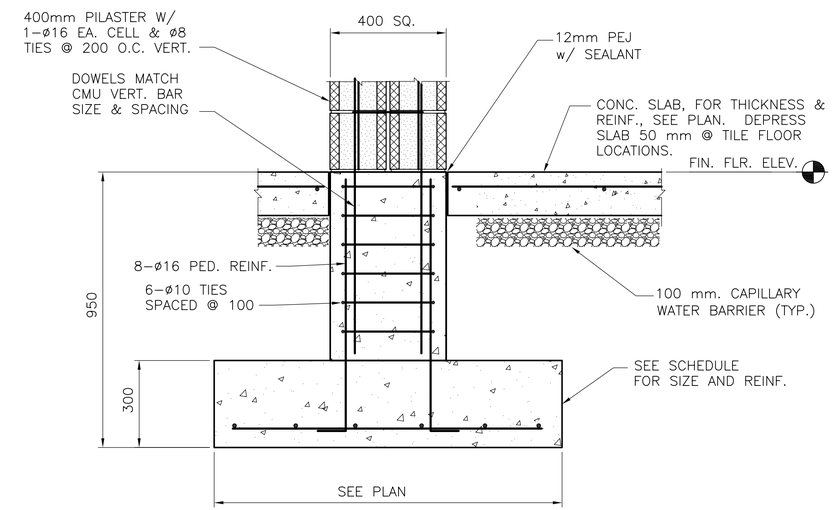

2 SECTION AT CMU PILASTER

CE–S–01 REF. SCALE: 1:10

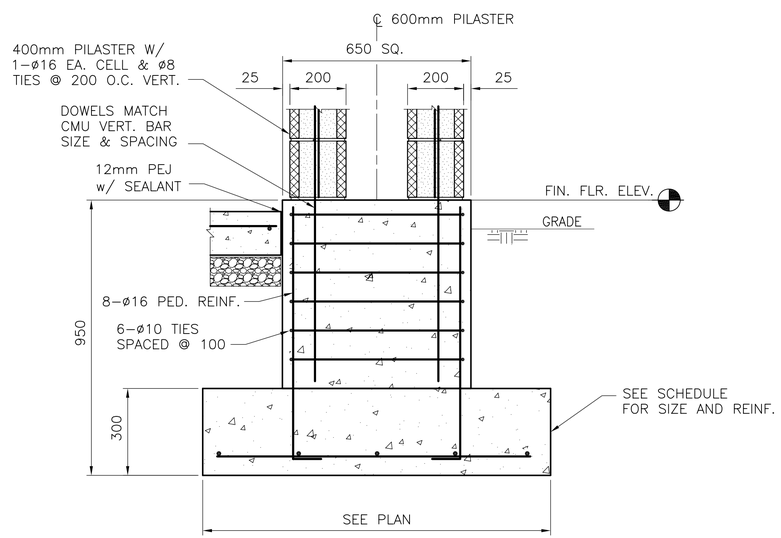

3 SECTION AT EXTERIOR PORCH CMU PILASTER

CE–S–01 REF. SCALE: 1:10

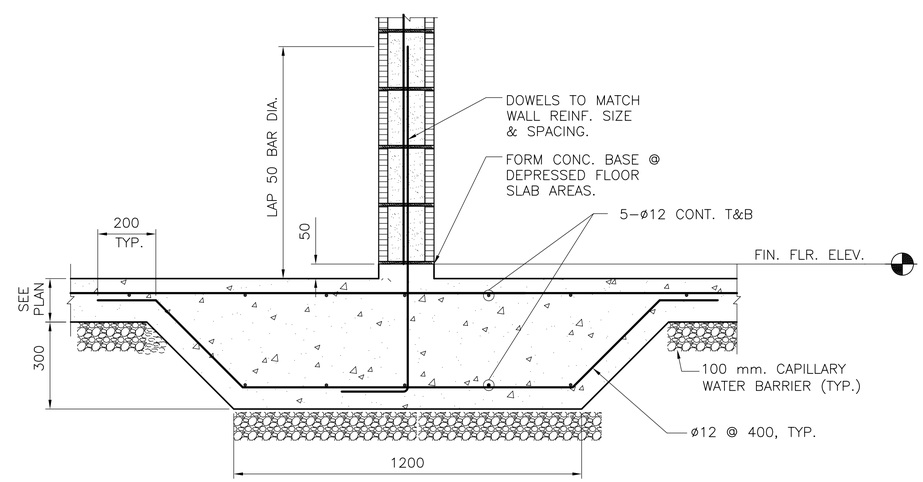

1 SECTION AT INTERIOR CMU CANTILEVERED WALL

CE–S–01 REF. SCALE: 1:10

200 0 200mm
SCALE: 1 = 10

UNLESS OTHERWISE NOTED, LINEAR DIMENSIONS SHOWN ARE IN MILLIMETERS.

SYMBOL	DESCRIPTION	DATE	APR.

Designed By:
Drawn By:
Checked By:
Date: 10 MAY 2007
File No. AF0707
I.S.O. Sheet File Name: AF0707CE–SB05SE.DWG
Solicitation Number: –

US Army Corps of Engineers Transatlantic Programs Center

ANA REGIONAL BRIGADE
PAKTIKA, AFGHANISTAN
EMBEDDED TRAINING FACILITY
DFAC 2

FOUNDATION SECTIONS

SHEET REFERENCE NUMBER:
CE–S–05

$DATE$
$FILE$

D SIZE BORDER
32 X 20.5

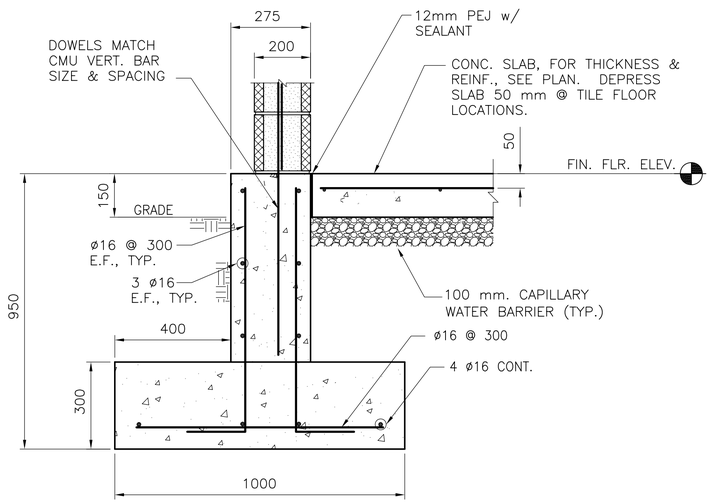

1 SECTION AT EXTERIOR CMU WALL

CE-S-01 REF. SCALE: 1:10

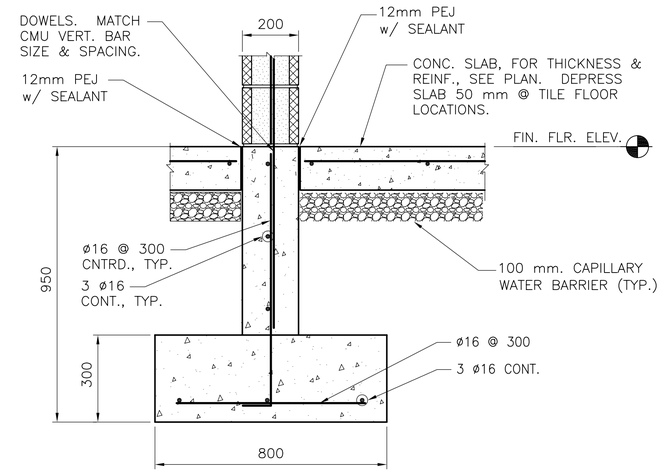

2 SECTION AT INTERIOR CMU WALL

CE-S-01 REF. SCALE: 1:10

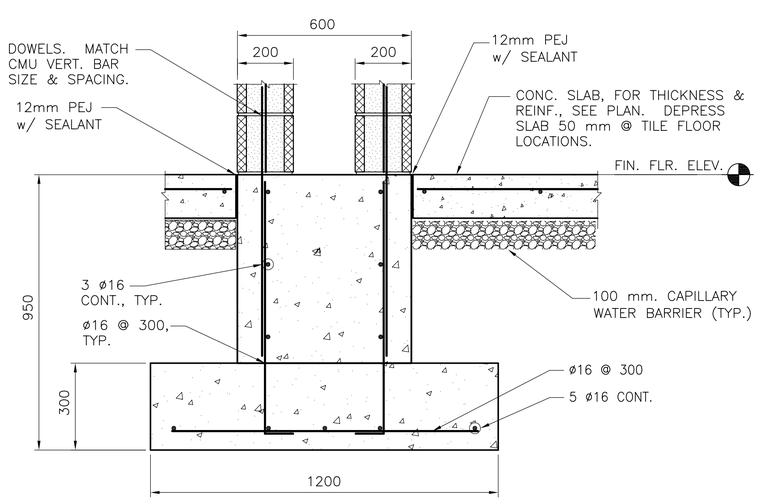

3 SECTION AT INTERIOR CHASE WALL

CD-S-01 REF. SCALE: 1:10

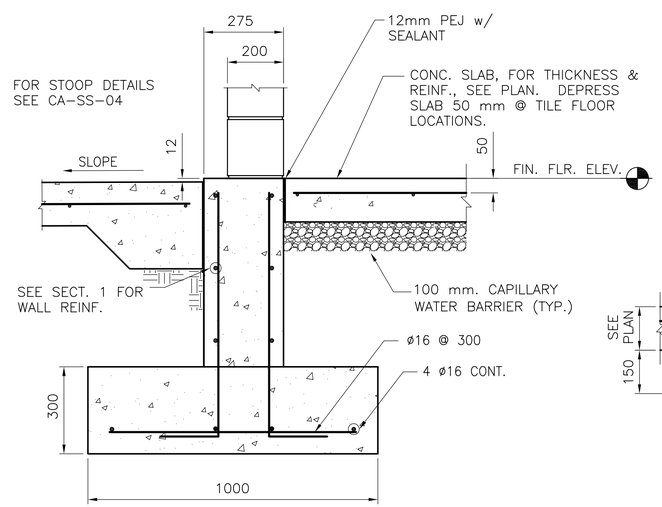

4 SECTION AT EXTERIOR DOOR

CE-S-01 REF. SCALE: 1:10

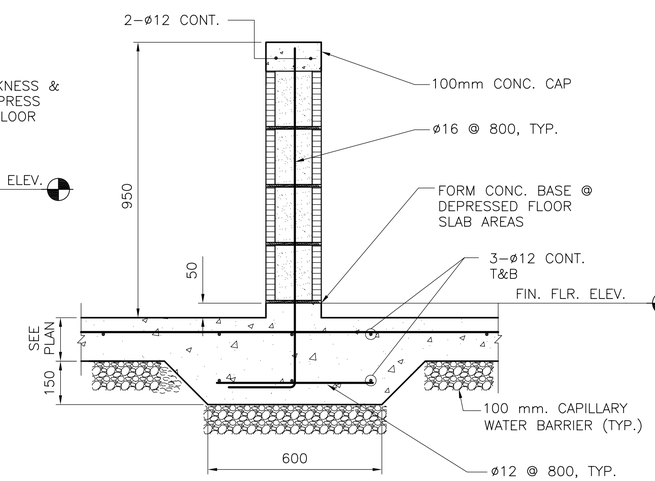

5 SECTION AT SERVING LINE PARTITION WALL

CE-S-01 REF. SCALE: 1:10

200 0 200mm
SCALE: 1 = 10

UNLESS OTHERWISE NOTED, LINEAR DIMENSIONS SHOWN ARE IN MILLIMETERS.

SYMBOL	DESCRIPTION	DATE	APR.

Designed By:
Drawn By:
Checked By:
Date: 10 MAY 2007
File No. AF0707
F.S.O. Sheet File Name: AF0707CE-SB04SE.DWG
Solicitation Number: –

US Army Corps of Engineers Transatlantic Programs Center

ANA REGIONAL BRIGADE
PAKTIKA, AFGHANISTAN
EMBEDDED TRAINING FACILITY
DFAC 2

FOUNDATION SECTIONS

SHEET REFERENCE NUMBER:
CE-S-04

$DATE$
$FILE$

D SIZE BORDER
32 X 20.5

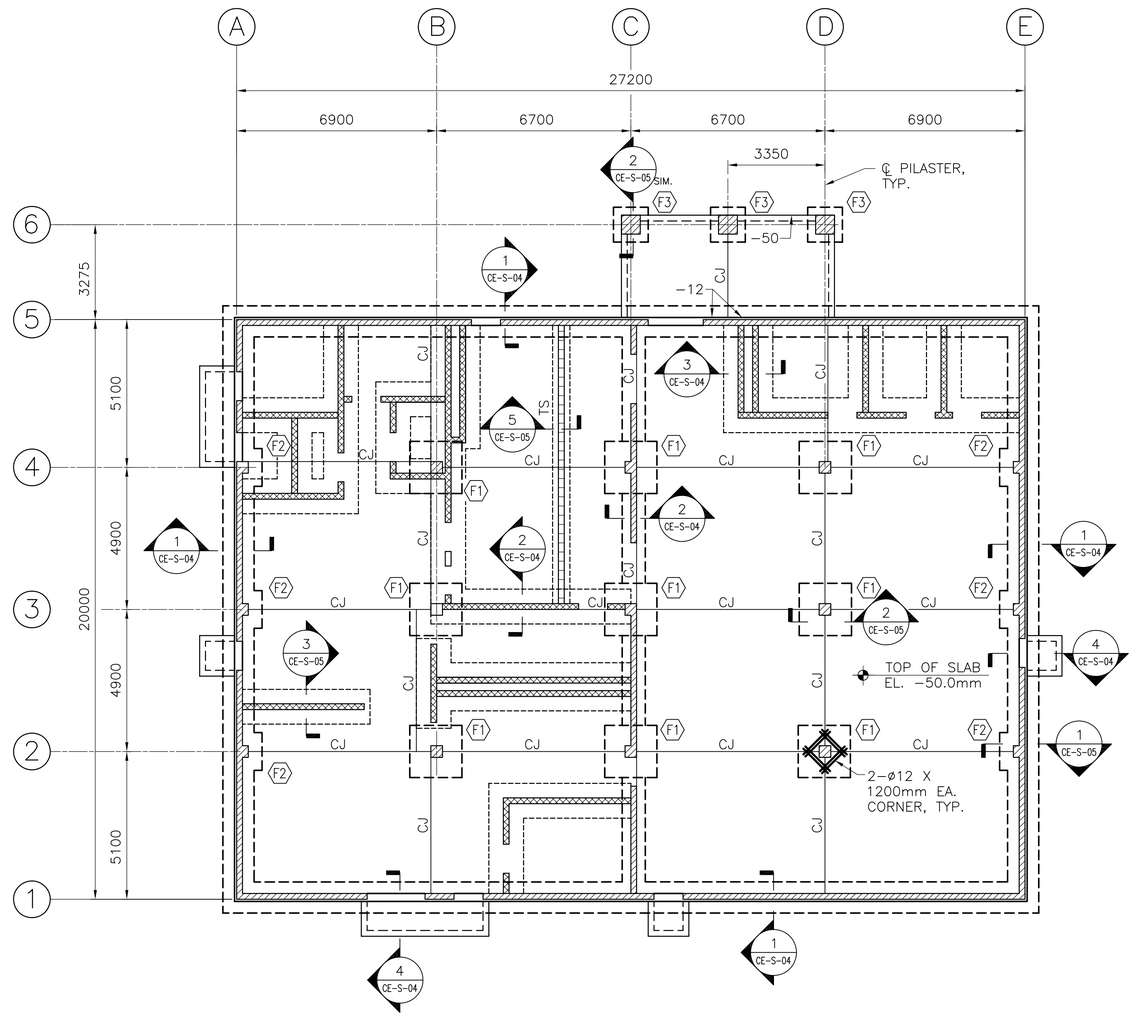

1 FOUNDATION PLAN

CE-S-01 REF. SCALE: 1:100

SHEET NOTES:

1. CMU WALL REINFORCEMENT SHALL BE ø16 @ 600. EXTERIOR CMU WALLS AND INTERIOR CMU WALL ON COLUMN GRID "C" SHALL BE FULLY GROUT. ALL OTHER CMU WALLS SHALL BE GROUTED AT CELLS W/ REINFORCEMENT ONLY.

2. LOCATE OUTSIDE FACE OF CMU WALLS AT 75MM FROM OUTSIDE FACE OF CONCRETE STEM WALL.

3. TOP OF CMU WALL ELEVATION SHALL BE 2.8M A.F.F.

4. REFER TO SHEET CE-SS-01 AND 02 FOR TYPICAL MASONRY DETAILS AND CONTROL JOINTS DETAILS.

5. REFER TO SHEET CE-SS-03 FOR TYPICAL SLAB JOINT DETAILS.

6. SLAB ON GRADE SHALL BE 150mm CONCRETE ON A 100mm CAPILLARY WATER BARRIER. SEE SHEET CE-SS-03 FOR TYPICAL SLAB REINFORCEMENT.

7. FOR WALL LOCATIONS, SEE ARCH. DRAWINGS.

LEGEND:

- CMU WALL ON SPREAD FOOTING INTERGRAL WITH CEILING SLAB
- CANTILEVERED CMU WALL ON SPREAD FOOTING; TOW AT EL 2800
- SERVING COUNTER PARTITION WALL ON SPREAD FOOTING. SEE ARCH. DWGS

SPREAD FOOTING SCHEDULE

MARK	SIZE	REINFORCING	
F1	1800 x 1800 x 300mm	6 ø16 E.W. (B)	
F2	1350 x 1350 x 300mm	4 ø16 E.W. (B)	
F3	1200 x 1200 x 300mm	4 ø16 E.W. (B)	

2000 0 2000mm
SCALE: 1 = 100

UNLESS OTHERWISE NOTED, LINEAR DIMENSIONS SHOWN ARE IN MILLIMETERS.

SYMBOL	DESCRIPTION	DATE	APR

Designed By:
Drawn By:
Checked By:
Date: 10 MAY 2007
File No. AF0707
F.S.O. Sheet File Name: AF0707CE-SB01FN.DWG
Solicitation Number: –

US Army Corps of Engineers Transatlantic Programs Center

ANA REGIONAL BRIGADE
PAKTIKA, AFGHANISTAN
EMBEDDED TRAINING FACILITY
DFAC 2

FOUNDATION PLAN

SHEET REFERENCE NUMBER:
CE-S-01

$DATE$
$FILE$

D SIZE BORDER
32 X 20.5

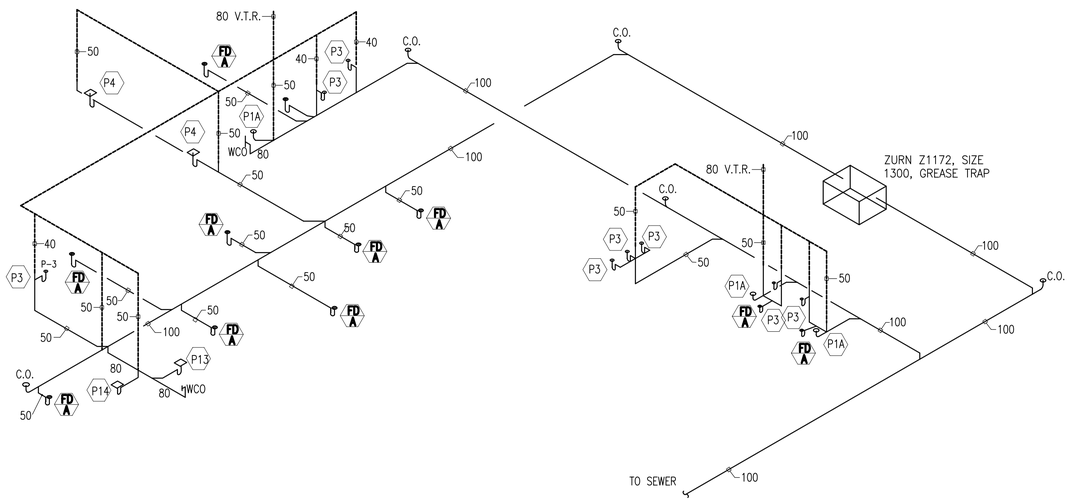

2 WASTE RISERS

SCALE: NTS

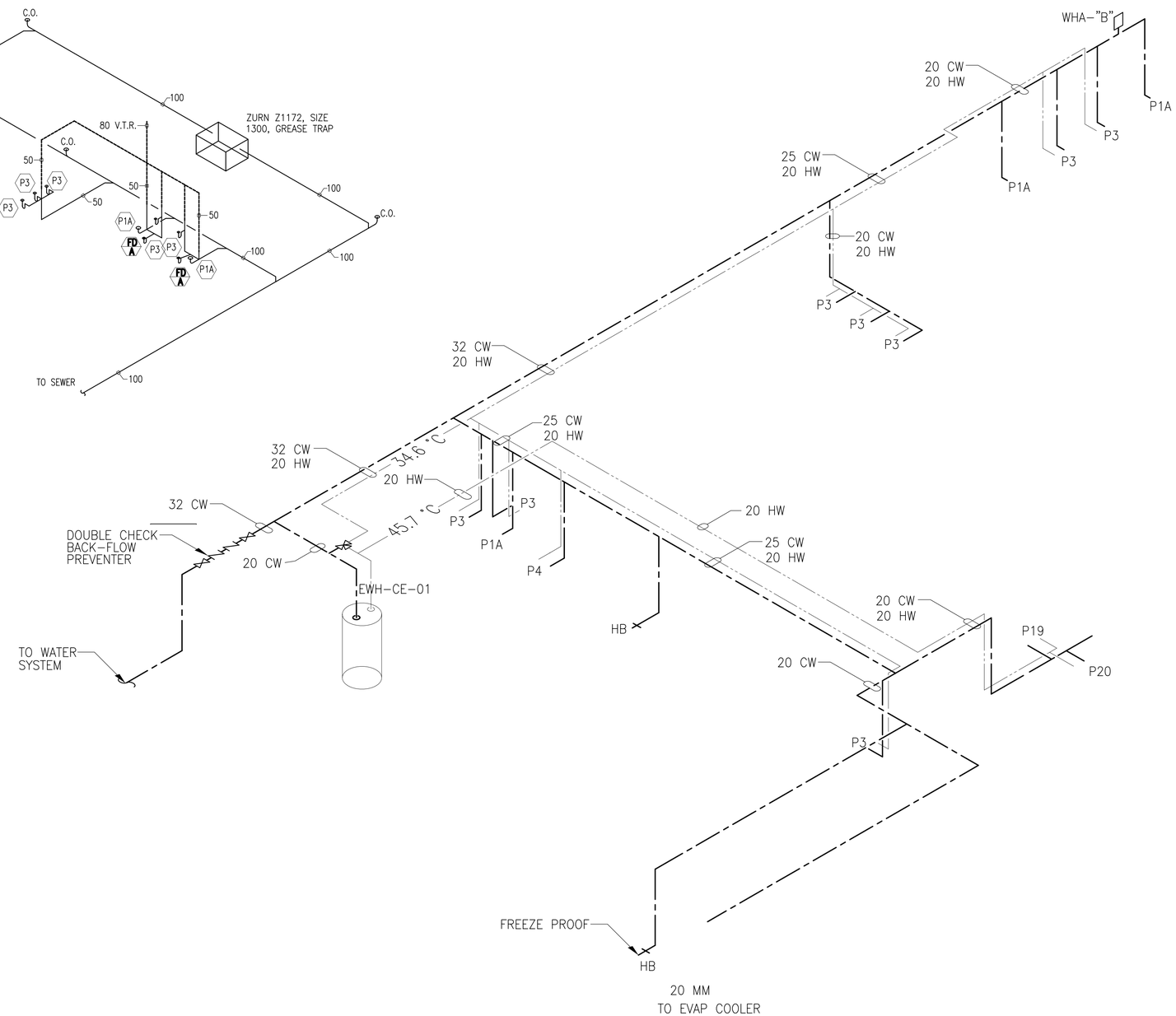

1 WATER RISERS

SCALE: NTS

UNLESS OTHERWISE NOTED, LINEAR DIMENSIONS SHOWN ARE IN MILLIMETERS.

SYMBOL	DESCRIPTION	DATE	APR

Designed By:
Drawn By:
Checked By:
Date: 10 MAY 2007
File No. AF0707
I.S.O. Sheet File Name: AF0707CE-MP0205.dwg
Solicitation Number: –

US Army Corps of Engineers Transatlantic Programs Center

ANA REGIONAL BRIGADE
PAKTIKA, AFGHANISTAN
EMBEDDED TRAINING FACILITY
DFAC 2
PLUMBING PLAN
– –

SHEET REFERENCE NUMBER:
CE-MP-02

$DATE$
$FILE$

D SIZE BORDER
32 X 20.5

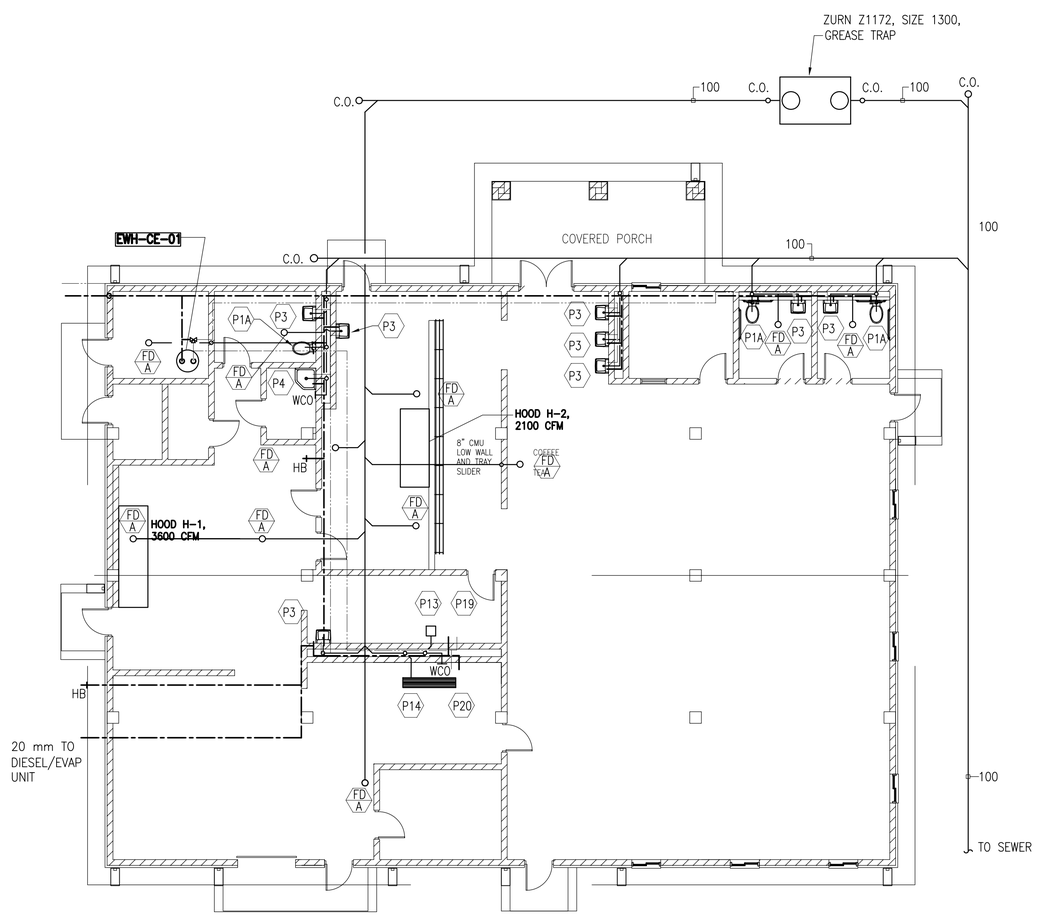

1 PLUMBING PLAN

SCALE: 1:100

ELECTRIC WATER HEATER SCHEDULE

Ser No.	EWH Name	Capacity (Gallon)	Electrical Data	TEMPERATURE RISE	REMARKS
DETENTION CENTER (DC)					
30	EWH-CE-01	80 gal.	12KW/3PH/380V/50HZ	90F (50C)	6 KW UPPER & 6 KW LOWER SIMULTANEOUS OPERATION

PLUMBING FIXTURE SCHEDULE

FIX. No.	SYMBOL	FIXTURE NAME	PLUMBING FIXTURE SCHEDULE C.W. MM	C.W. (INCHES)	H.W. MM	H.W. (INCHES)	WASTE MM	WASTE (INCHES)	VENT MM	VENT (INCHES)	REMARKS
P1A		WESTERN WATER CLOSET (FLOOR OUTLET)	15	(1/2")	–	–	100	(4")	50	(2")	
P3		LAVATORY (WALL HUNG)	15	(1/2")	15	(1/2")	40	(1 1/2")	40	(1 1/2")	
P4		JANITOR SINK (FLOOR MOUNT JANITOR TYPE)	15	(1/2")	15	(1/2")	50	(2")	40	(1 1/2")	
P8		SERVICE SINK	15	1/2	15	1/2	80	3"	50	2"	
P11		GREASE INTERCEPTOR	–	–	–	–					SEE PLAN
P13		FLOOR SINK (FS)	–	–	–	–			–	–	SEE PLAN
P14		TRENCH DRAIN	–	–	–	–			–	–	SEE PLAN
FD A		FLOOR DRAIN	–	–	–	–	–	–	–	–	SEE PLAN ①
FCO		FLOOR CLEANOUT	–	–	–	–	–	–	–	–	SEE PLAN ②
EWH		ELECTRIC WATER HEATER					–	–	–	–	SEE PLAN
P14		DRINKING FOUNTAIN	15	(1/2")	–	–	50	(2")	40	(1 1/2")	SEE PLAN
P19		DBL COMP SINK	15	(1/2")	15	(1/2")	40	(1 1/2")	40	(1 1/2")	
P20		TRIPLE COMP SINK	15	(1/2")	15	(1/2")	40	(1 1/2")	40	(1 1/2")	

NOTES:
① SIZE OF FLOOR DRAIN WILL VARY.
② FLOOR CLEAN-OUT SHALL BE SAME SIZE AS PIPE AS SHOWN.

UNLESS OTHERWISE NOTED, LINEAR DIMENSIONS SHOWN ARE IN MILLIMETERS.

SYMBOL	DESCRIPTION	DATE	APR

Designed By:
Drawn By:
Checked By:
Date: 10 MAY 2007
File No. AF0707
I.S.O. Sheet File Name: AF0707CE-MP01PN.dwg
Solicitation Number: –

US Army Corps of Engineers Transatlantic Programs Center

ANA REGIONAL BRIGADE
PAKTIKA, AFGHANISTAN
EMBEDDED TRAINING FACILITY
DFAC 2
PLUMBING PLAN – –

SHEET REFERENCE NUMBER:
CE-MP-01

$DATE$
$FILE$

D SIZE BORDER
32 X 20.5

PLUMBING LEGEND

SYMBOL	DESCRIPTION
AV	ANGLE VALVE
BV	BALL VALVE
CV	CHECK VALVE
	COCK VALVE
DV	DRAIN VALVE
P7	EMERGENCY SHOWER AND EYE-WASH
FCO	FLOOR CLEANOUT
FD	FLOOR DRAIN
FS	FLOOR SIPHON
P13	FLOOR SINK (FS)
	GALITRAP (GT)
GV	GATE VALVE
HB	HOSE BIBB, PLAN
	INSPECTION MANHOLE
	PIPE TURNING DOWN
	PIPE TURNING UP
CO	PLUG CLEANOUT
	REDUCER-INCREASER
	SUPPORT LOCATION
	Y-TYPE STRAINER
U	UNION
VRV	VACUUM RELIEF VALVE
WHA	WATER HAMMER ARRESTOR

ABBREVIATION	DESCRIPTION
AC	AIR COMPRESSOR
℄	CENTER LINE
CA	COMPRESSED AIR
COYB	CLEANOUT IN YARD BOX
CW	COLD WATER PIPES
DT	DAY TANK
FOR	FUEL OIL RETURN
FOS	FUEL OIL SUPPLY
FT	FLASH TANK
H/L	HIGH LEVEL
HW	HOT WATER PIPES
IC	INSPECTION CHAMBER
I.L	INVERT LEVEL
LD	LEAK DETECTOR
L/L	LOW LEVEL
LSH	LEVEL SWITCH HIGH
LSHH	LEVEL SWITCH HIGH HIGH
LSL	LEVEL SWITCH LOW
LSLL	LEVEL SWITCH LOW LOW
LT	LEVEL TRANSMITTER
OW	OILY WASTE
OWS	OIL WATER SEPARATOR
P	PUMP
RP	RECIRCULATION PUMP
YCO	YARD CLEAN OUT
WOT	WASTE OIL STORAGE TANK
NT	NEUTRALIZATION TANK
GS	GREASE INTERCEPTOR

ABBREVIATION	DESCRIPTION
SP	SOIL PIPE
SR	SHORT RADIUS
U.G.	UNDER GROUND
VP	VENT PIPE
V.R.V	VACUUM RELIEF VALVE
WCO	WALL CLEANOUT
WHA	WATER HAMMER ARRESTOR
WO	WASTE OIL
WP	WASTE PIPE

LINE STYLE	DESCRIPTION
	COLD WATER (CW)
	HOT WATER (HW)
	VENT PIPE (VP)
	SOIL PIPE (SP)
	WASTE PIPE (WS)

EQUIPMENT IDENTIFICATION

EWH-XX-XX
- ELECTRIC WATER HEATER
- UNIT NUMBER
- BUILDING ABBREVIATION

NOTES:

1. INTERIOR SOIL AND WASTE PIPING 80 (3") AND SMALLER SHALL BE ROUTED WITH A 2% SLOPE. INTERIOR SOIL AND WASTE PIPING 100 (4") AND LARGER SHALL BE ROUTED WITH A MINIMUM 1% SLOPE.
2. EXTERIOR SOIL OR WASTE PIPING SHALL BE ROUTED WITH A 2% SLOPE WHEREVER POSSIBLE, OTHERWISE A MINIMUM SLOPE OF 1% SHALL BE USED.
3. WATER AND DRAINAGE PIPING SHALL BE EXTENDED 1.5 m OUTSIDE THE BUILDING UNLESS OTHERWISE INDICATED

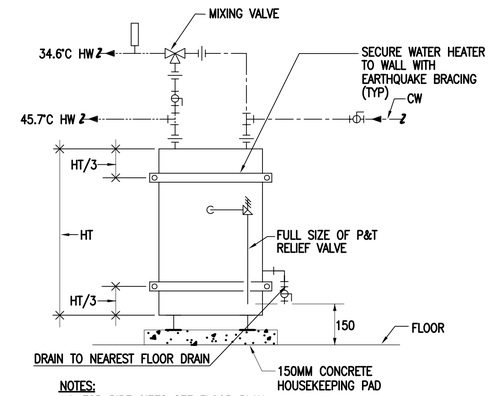

NOTES:

1-FOR PIPE SIZES SEE FLOOR PLAN.
2-FOR HEATER SELECTION SEE SCHEDULE TABLE AT DRAWING NO. (CO-P-01) AND SPECIFICATIONS.
3-SECURE WATER HEATER TO FLOOR WITH EXPANSION BOLTS, 20mm (3/4")MIN.

ELECTRIC WATER HEATER PIPING DETAIL

SCALE: N.T.S

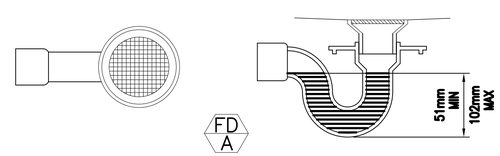

FLOOR DRAIN TYPE A

SCALE: N.T.S

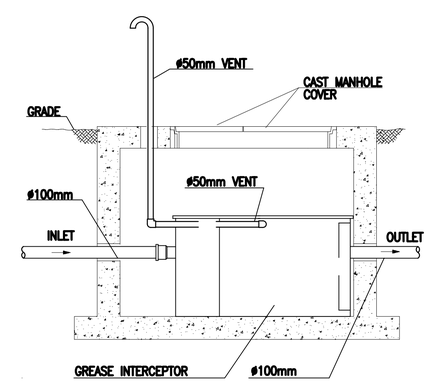

GREASE INTERCEPTOR

SCALE: N.T.S

UNLESS OTHERWISE NOTED, LINEAR DIMENSIONS SHOWN ARE IN MILLIMETERS.

SYMBOL	DESCRIPTION	DATE	APR

Designed By:
Drawn By:
Checked By:
Date: 10 MAY 2007
File No. AF0707
I.S.O. Sheet File Name: AF0707CE-MP01GN.dwg
Solicitation Number: _

US Army Corps of Engineers Transatlantic Programs Center

ANA REGIONAL BRIGADE
PAKTIKA, AFGHANISTAN
EMBEDDED TRAINING FACILITY
DFAC 2
PLUMBING LEGEND AND DETAILS
_

SHEET REFERENCE NUMBER:
CE-GP-01

$DATE$
$FILE$

D SIZE BORDER
32 X 20.5

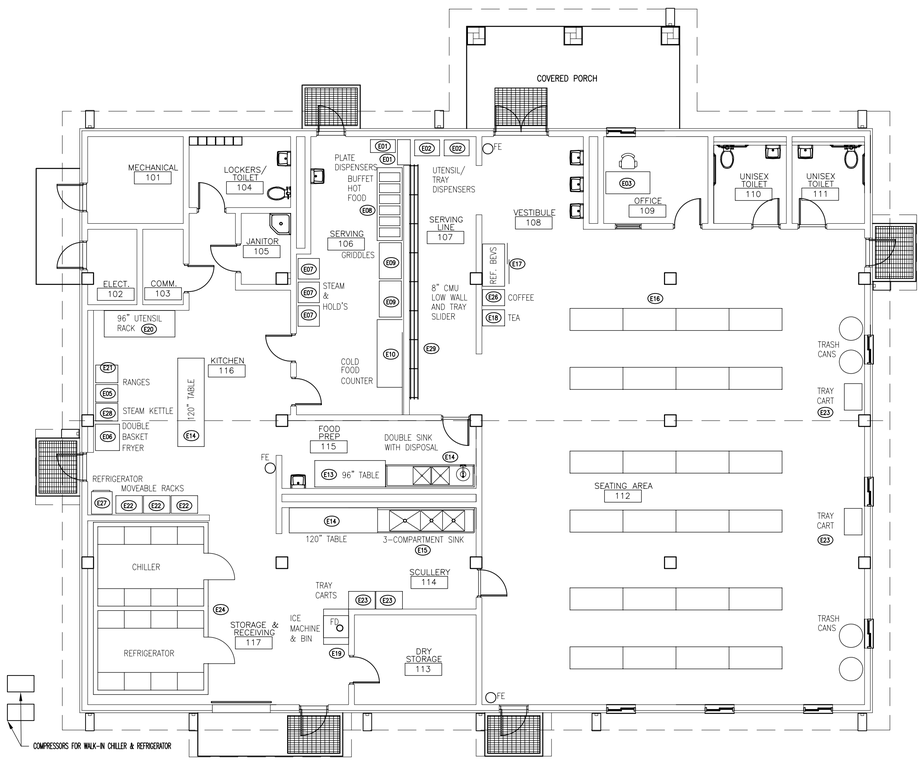

SYM.	DESCRIPTION	MANUFACTURER/MODEL NO.	ELEC.@50HZ	CW	HW	W
E01	DUAL PLATE DISPENSER, MOVABLE	SERVOLIFT EASTERN/2ATC4	–	–	–	–
E02	DUAL TRAY DISPENSER & SILVERWARE/NAPKIN DISPENSER, MOVABLE	SERVOLIFT EASTERN/PTS/1418M02	–	–	–	–
E03	OFFICE FURNITURE, MOVABLE	–	–	–	–	–
E04	TRASH CANS, 3 EACH, MOVABLE	–	–	–	–	–
E05	ELECTRIC RANGE WITH CONVECTION OVEN, 6-BURNER	GARLAND/36ERC32-3	19KW/240V/1ø	–	–	–
E06	ELECTRIC FRYER	PITCO SOLSTICE/SE14	25.8A/380V/3ø	–	–	–
E07	STEAMER – 12 PAN CAPACITY	ACCUTEMP/S620B3D1200BL	6KW/240V/1ø	–	–	–
E08	BUFFET, HOT FOOD	SERVOLIFT EASTERN/6HF(501-6)	6KW/230V/1ø	–	–	–
E09	ELECTRIC GRIDDLE, STAND MOUNTED	ACCUTEMP/EG-A48	14.25KW/230V/1ø	–	–	–
E10	COUNTER COLD FOOD	SERVOLIFT EASTERN/6-CM(502-6R-CW)	–	–	–	–
E11	FREEZER	TRUE FOOD SERVICE EQUIPMENT, INC/TS49-F	6.4A/230V/1ø	–	–	–
E12	–	–	–	–	–	–
E13	TABLE, 96" LONG, FIXED	–	–	–	–	–
E14	TABLE, 120" LONG, WALL MOUNTED SHELVING, DOUBLE SINKS, DISPOSAL, FIXED	–	–	–	–	–
E15	MULTI-COMPARTMENT SINK	–	–	15	50	–
E16	TABLES, CHAIRS, MOVABLE	–	–	–	–	–
E17	REF. BEVERAGES, SLIDING DOORS	TRUE FOOD SERVICE EQUIPMENT, INC./GDM-45	5.4A/230V/1ø	–	–	–
E18	ICED TEA BREWER AND DISPENSER	BUNN/TB3QA AND TDO-4	8A/230V/1ø	–	–	–
E19	ICE MACHINE	MANITOWOC/QM30A	5.3A/230V/1ø	10	–	–
E20	96" UTNESIL RACK, MOVABLE	–	–	–	–	–
E21	ELECTRIC RANGE	GARLAND/SU686	19KW/240V/1ø	–	–	–
E22	COOLING & STORAGE RACKS, MOVABLE	–	–	–	–	–
E23	TRAY CARTS, MOVABLE	–	–	–	–	–
E24	WALK-IN CHILLER & REFRIGERATOR	INTERNATIONAL COLD STORAGE/IC 1320	30.7A/230V/1ø	–	–	–
E25	–	–	–	–	–	–
E26	COFFEE BREWER AND DISPENSER	BUNN/SRU063250001	4KW/230V/1ø	10	–	–
E27	REFRIGERATOR	TRUE FOOD SERVICE EQUIPMENT, INC./T-12	3A/230V/1ø	–	–	–
E28	STEAM KETTLE	SOUTHBEND/EMT-10	42KW/380V/3ø	13	–	2
E29	TRAY SLIDE (PROVIDE MFRS BRACKETS AT MFR RECOMMENDED SPACING)	LAWRENCE/THREE (3) 1" SOLID BRASS TUBES	–	–	–	–
	NOT SHOWN: ULTRAVOLET LIGHT FLY CATCHERS, WALL MOUNTED, VERIFY NUMBER AND LOCATION WITH USER		–	–	–	–

1 KITCHEN EQUIPMENT PLAN

SCALE: 1:100

UNLESS OTHERWISE NOTED, LINEAR DIMENSIONS SHOWN ARE IN MILLIMETERS.

SYMBOL	DESCRIPTION	DATE	APR

Designed By:
Drawn By:
Checked By:

Date: 10 MAY 2007
File No. AF0707
I.S.O. Sheet File Name: AF0707CE-MK01PNLDWG
Solicitation Number: –

US Army Corps of Engineers Transatlantic Programs Center

ANA REGIONAL BRIGADE
PAKTIKA, AFGHANISTAN
EMBEDDED TRAINING FACILITY
DFAC 2
KITCHEN PLAN
– –

SHEET REFERENCE NUMBER:
CE-MK-01

$DATE$
$FILE$

D SIZE BORDER
32 X 20.5

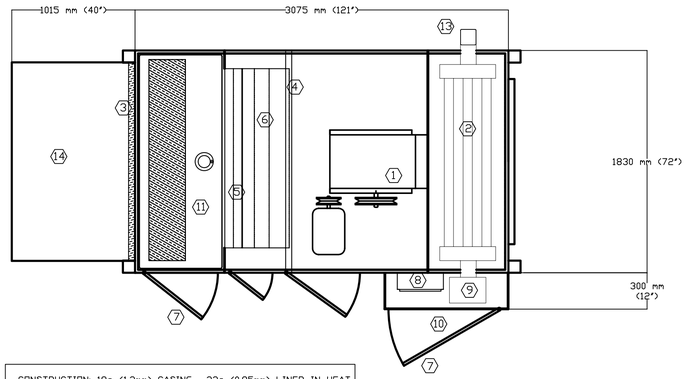

CONSTRUCTION: 18g (1.3mm) CASING. 22g (0.85mm) LINER IN HEAT EXCHANGER SECTION. INSULATION, 1" (25mm) @ 1.5 lb/ft3 (24 kg/m3). 4" (100mm) STRUCTURAL STEEL TUBE BASE. DRY ENAMEL FINISH.
APPROX. WT. 2700 lb (1227 kg)

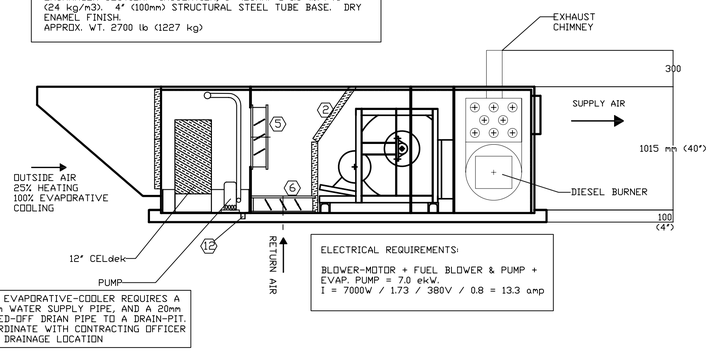

THE EVAPORATIVE-COOLER REQUIRES A 20mm WATER SUPPLY PIPE, AND A 20mm BLEED-OFF DRIAN PIPE TO A DRAIN-PIT. COORDINATE WITH CONTRACTING OFFICER FOR DRAINAGE LOCATION

ELECTRICAL REQUIREMENTS:

BLOWER-MOTOR + FUEL BLOWER & PUMP + EVAP. PUMP = 7.0 ekW.
I = 7000W / 1.73 / 380V / 0.8 = 13.3 amp

THE HEAT-COOL-UNIT MUST BE FACTORY BUILT FROM A SINGLE MANUFACTURER.

AAON MODEL No: DT-??/SW/HV, AAON INTERNATIONAL = OR EQUAL =
E-mail ABILLOK@WORLDNET.ATT.NET = TEL: USA, 623-433-9880

1	S/A FAN & MOTOR: 6740 cfm (11450 m3/h) @ ESP 1" W.C. - MOTOR 7.5 Hp, 2 SPEED, 380v/3/50Hz, TEFC, MIN. 40°C AMBIENT
2	AAON INDIRECT-FIRED STAINLESS-STEEL HEAT EXCHANGER. INPUT 350 MBH (102 TKw); DIESEL FUEL; AIR TEMP. RISE 48 °F (27 °C)
3	2" (50mm) 30% EFF WASHABLE PRE-FILTERS.
4	2" (50mm) 30% EFF. PLEATED FINAL-FILTERS.
5	OUTSIDE AIR DAMPER with ACTUATOR.
6	RETURN AIR DAMPER with ACTUATOR.
7	ACCESS DOORS (TYP), HINGED with CAMLOCK
8	ELECTRICAL PANEL
9	DIESEL FUEL BURNER - RIELLO 40 (No. 2 FUEL OIL); FIRING RATE 1.45 TO 2.95 gph (5.49 TO 11.17 lt/h); CAPACITY 203 TO 413 MBH (60 TO 120 tkW) FUEL PRESSURE 100 TO 200 psig (690 TO 1380 KPa).
10	ELECTRICAL & PIPING VESTIBULE
11	EVAPORATIVE COOLING SECTION, EVAP. PADS: 12" CELdek MEDIA @ 85% EFF. Complete with WATER-PUMP, FLOAT-VALVE, DISTRIBUTORS & PIPE.
12	STAINLESS-STEEL SUMP TANK with 3/4" NPT DRAIN PIPE & BLEED-OFF OVERFLOW (to prevent mineral build-up in evap. water).
13	BURNER EXHAUST CHIMNEY 5" X 5 " (125 X 125 mm).
14	OUTDOOR AIR INTAKE HOOD with BIRDSCREEN.

AAON MODEL No. DT-??/SW/HV (DWG: PDM-3788), WT. 2700 lb (1230 Kg)
CONTACT: ANDREW J. BILLOK, AAON INTERNATIONAL; AJB ASSOCIATES, INC.
3120 WEST CAREFREE HIGHWAY, PHOENIX, AZ 85086; TEL: 623-433-9880
E-MAL: ABILLOK@WORLDNET.ATT.NET
HEAT-COOL-UNITS MANUFACTURED BY AAON CANADA, LEAD TIME 16 TO 18 WEEKS FOR UP TO 100 UNITS ORDERED AT ONE TIME. FACTORY IS LOCATED IN BURLINGTON, ONTARIO, CANADA.

CONTROLS: EVAP/DIESEL UNITS SHALL BE STARTED THROUGH HEAT-COOL-OFF SWITCH AND RUN CONTINOUSLY TO HEAT AND COOL BUILDING. THERMOSTAT SHALL CONTROL SUPPLY TEMPERATURE OFF UNIT.

COOLING MODE: UNIT SHALL OPERATE IN 100% OA MODE. HOOD FANS EF-DF-03 AND EF-DF-04 SHALL BE ENERGIZED, AND EXHAUST FAN EF-DF-05 SHALL BE DEENERGIZED.

HEATING MODE: UNIT SHALL OPERATE IN RETURN AIR MODE, RETURNING APPROX. 70% TO 15% OF SUPPLY AIR TO UNIT, DEPENDING ON HOOD OPERATION. OUTSIDE AIR SHALL MAKE UP REMAINDER.

IN UNOCCUPIED HEATING MODE, EF-DF-04 SHALL BE ENERGIZED AND EXHAUST FAN EF-DF-03 AND EF-DF-05 SHALL BE DEENERGIZED.

IN OCCUPIED HEATING MODE (HOODS RUNNING), EF-DF-03 AND EF-DF-04 SHALL BE ENERGIZED AND EXHAUST FAN EF-DF-05 SHALL BE DEENERGIZED.

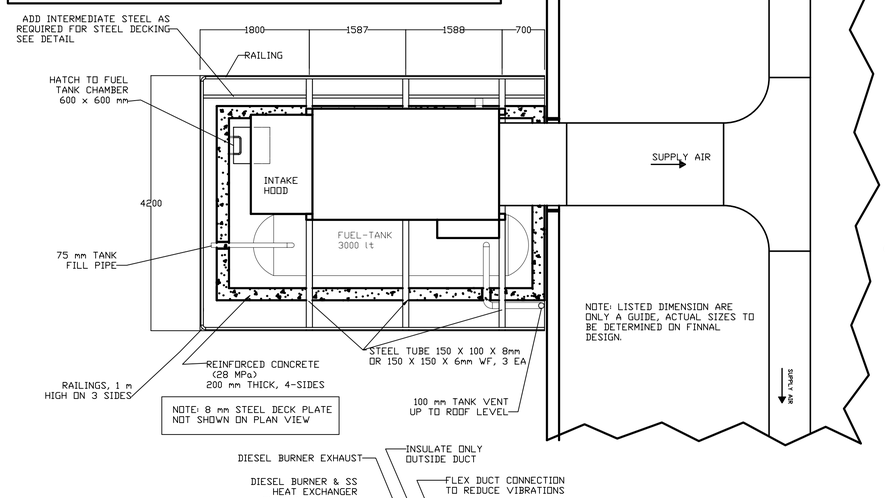

NOTE: 8 mm STEEL DECK PLATE NOT SHOWN ON PLAN VIEW

NOTE: LISTED DIMENSION ARE ONLY A GUIDE, ACTUAL SIZES TO BE DETERMINED ON FINNAL DESIGN.

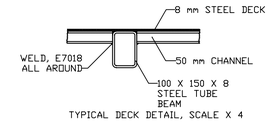

TYPICAL DECK DETAIL, SCALE X 4

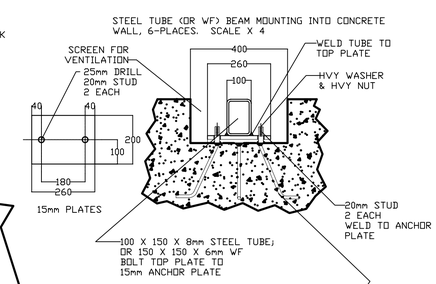

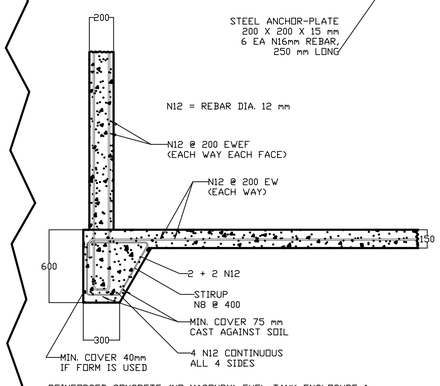

REINFORCED CONCRETE (NO MASONRY) FUEL-TANK ENCLOSURE & MOUNTING PLATFORM FOR HEAT-COOL UNIT.

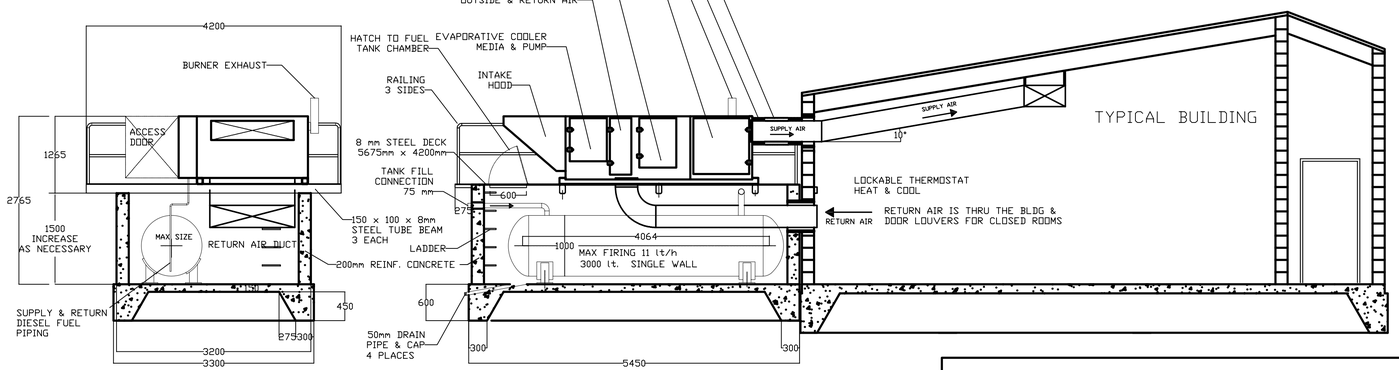

APPROX. CONCRETE 28 MPa:
FOUNDATION-SLAB : 6.5 m3
ENCLOSURE-WALLS : 6.0 m3
AT 1.5 m HIGH

DFAC2 BUILDING COOLING LOAD - 160,140 BTUH. MAX BUILDING HEATING LOAD - 369,360 BTUH UNIT MANUFACTURER SHALL MODIFY THE UNIT AS NECESSARY TO INSURE THESE LOADS ARE MET. CFMS TO INDIVIDUAL ROOMS AND DUCT SIZE ALSO MAY BE MODIFIED.

UNLESS OTHERWISE NOTED, LINEAR DIMENSIONS SHOWN ARE IN MILLIMETERS.

SYMBOL	DESCRIPTION	DATE	APR

Date: 10 MAY 2007
File No. AF0707
I.S.O. Sheet File Name: AF0707CE-MH03DN.dwg
Solicitation Number: -
Designed By:
Drawn By:
Checked By:

US Army Corps of Engineers
Transatlantic Programs Center

ANA REGIONAL BRIGADE
PAKTIKA, AFGHANISTAN
EMBEDDED TRAINING FACILITY
DFAC 2
HVAC DETAILS
- -

SHEET REFERENCE NUMBER:
CE-DM-02

$DATE$
$FILE$

D SIZE BORDER
32 X 20.5

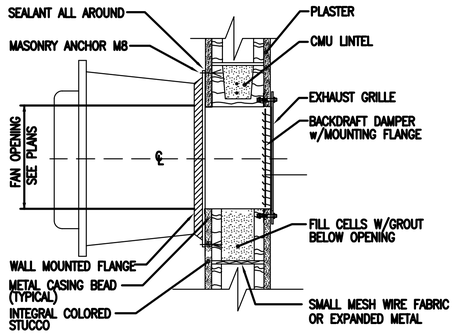

NOTES:-

* GASKET MATERIAL TO BE PROVIDED TO BOTTOM OF FAN INSIDE MOUNTING ANGLES.

1 WALL MOUNTED EXHAUST FAN INSTALLATION DETAIL

SCALE: N.T.S

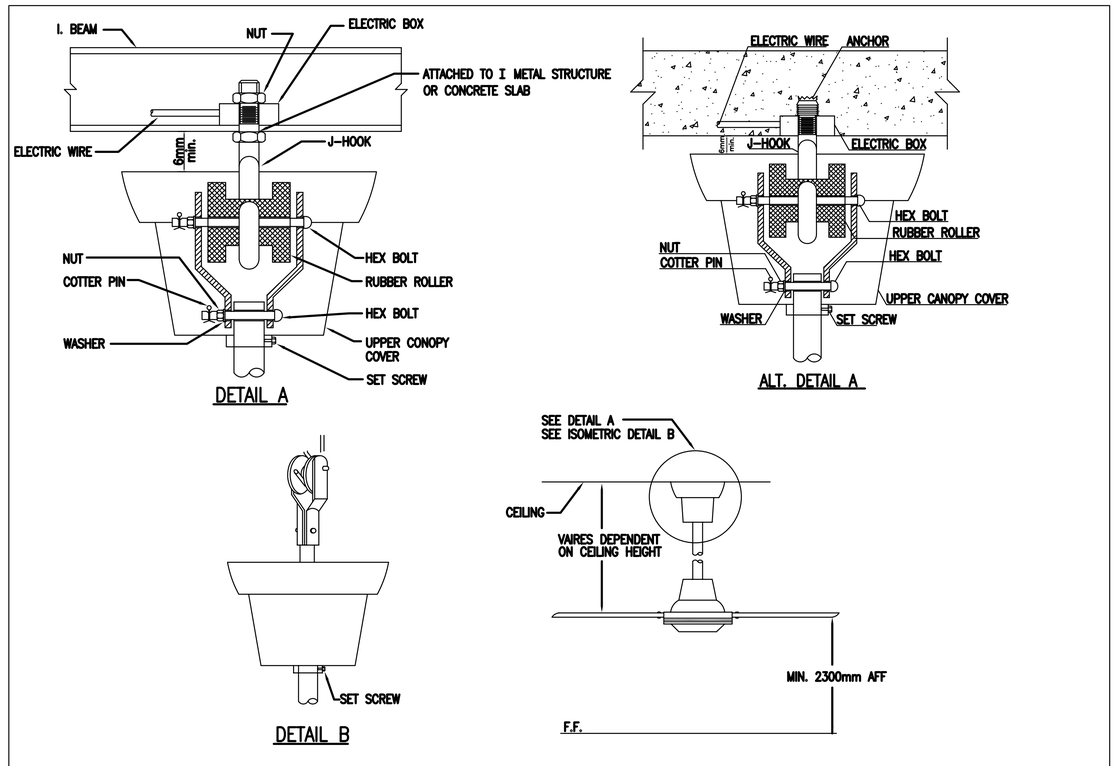

3 CEILING FAN MOUNTING DETAILS

SCALE: N.T.S

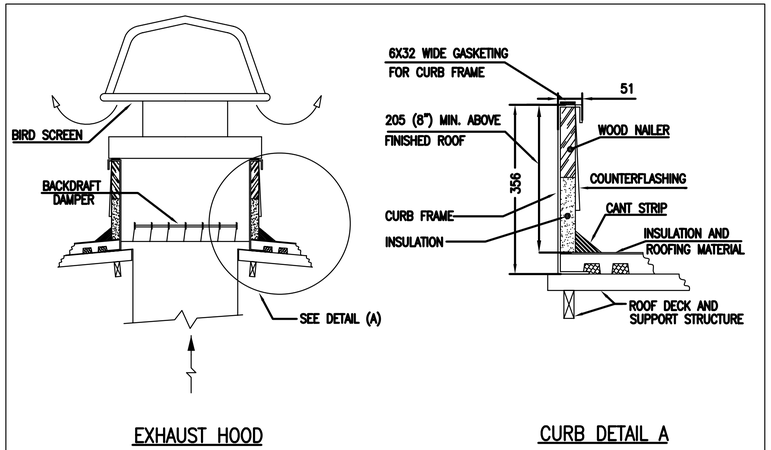

2 ROOF MOUNTED EXHAUST FAN DETAIL

SCALE: N.T.S

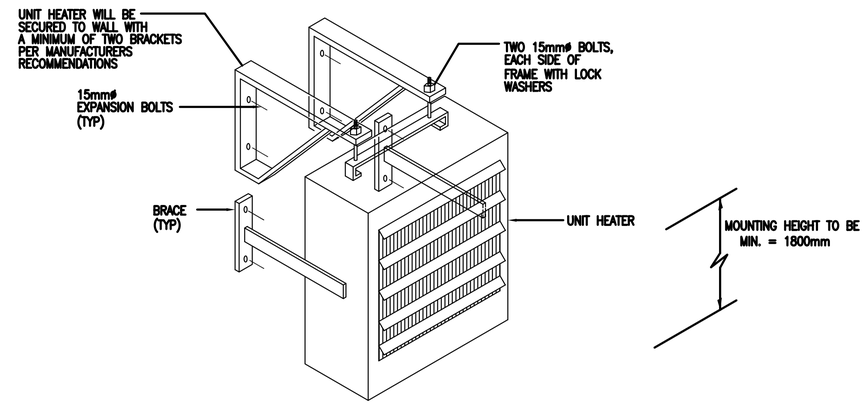

4 ELECTRIC WALL MOUNTED UNIT HEATER DETAIL

SCALE: N.T.S

UNLESS OTHERWISE NOTED, LINEAR DIMENSIONS SHOWN ARE IN MILLIMETERS.

SYMBOL	DESCRIPTION	DATE	APR

Designed By:
Drawn By:
Checked By:
Date: 10 MAY 2007
File No. AF0707
I.S.O. Sheet File Name: AF0707CE-MH020N.dwg
Solicitation Number: –

US Army Corps of Engineers Transatlantic Programs Center

ANA REGIONAL BRIGADE
PAKTIKA, AFGHANISTAN
EMBEDDED TRAINING FACILITY
DFAC 2
HVAC DETAILS
– –

SHEET REFERENCE NUMBER:
CE–DM–01

$DATE$
$FILE$

D SIZE BORDER
32 X 20.5

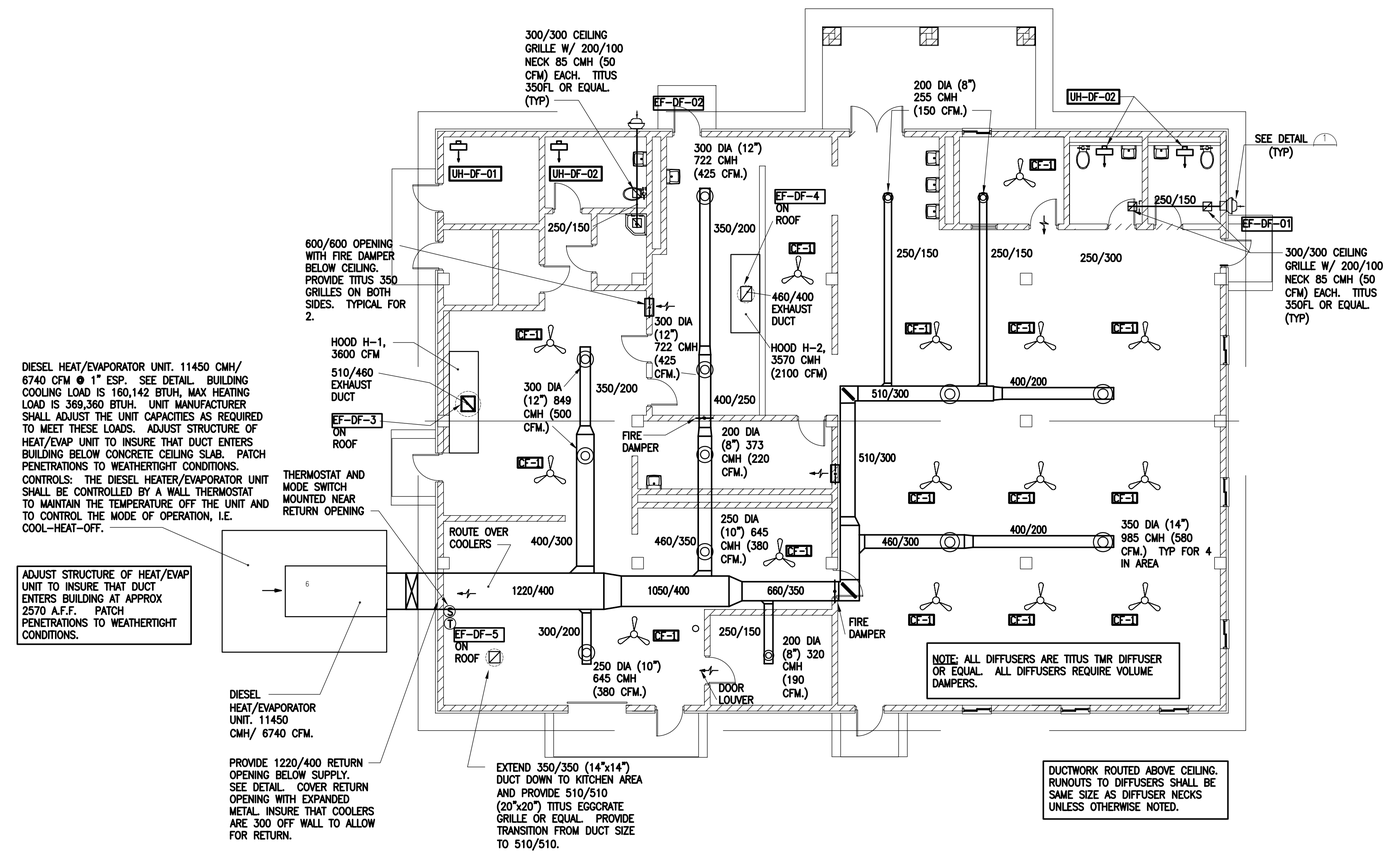

HVAC FLOOR PLAN

SCALE: 1:100

CONTROLS: EVAP/DIESEL UNITS SHALL BE STARTED THROUGH HEAT-COOL-OFF SWITCH AND RUN CONTINOUSLY TO HEAT AND COOL BUILDING. THERMOSTAT SHALL CONTROL SUPPLY TEMPERATURE OFF UNIT.

COOLING MODE: UNIT SHALL OPERATE IN 100% OA MODE. HOOD FANS EF-DF-03 AND EF-DF-04 SHALL BE ENERGIZED, AND EXHAUST FAN EF-DF-05 SHALL BE DEENERGIZED.

HEATING MODE: UNIT SHALL OPERATE IN RETURN AIR MODE, RETURNING APPROX. 70% TO 15% OF SUPPLY AIR TO UNIT, DEPENDING ON HOOD OPERATION. OUTSIDE AIR SHALL MAKE UP REMAINDER.

IN UNOCCUPIED HEATING MODE, EF-DF-04 SHALL BE ENERGIZED AND EXHAUST FAN EF-DF-03 AND EF-DF-05 SHALL BE DEENERGIZED.

IN OCCUPIED HEATING MODE (HOODS RUNNING), EF-DF-03 AND EF-DF-04 SHALL BE ENERGIZED AND EXHAUST FAN EF-DF-05 SHALL BE DEENERGIZED.

CEILING FAN SCHEDULE (CF)

UNIT NUMBER	TYPE (NOTE 1)	FAN DIAMETER	MAX WATTS	ELECTRICAL DATA			REMARKS
				VOLTS	PHASE	HERTZ	
CF-1	WITH LIGHT	48 in	100	220	1	50	3-SPEED

NOTES:- 1- WITH LIGHT FIXTURE - (2) 13 WATT FLOURESCENT BULBS
2- BOTTOM OF FAN MOUNTING HEIGHT = MINIMUM 2500mm A.F.F
3- PROVIDE WITH REMOTE WALL MOUNTED, SWITCH LOCATED ADJACENT TO THERMOSTAT. SWITCH TO CONTROL FAN AND LIGHTS SEPERATELY.

ELECTRIC UNIT HEATER

MARK		UH-DF-1	UH-DF-2
CAPACITY (KW)		6	2
HEATING CAPACITY TOTAL (BTUH)		20,484	6828
CMH/THROW (M)		680/3	500/3
LOCATION		MECH ROOM	TOILETS
ELECTRICAL DATA	VOLTS	220	220
	PHASE	1	1
	HERTZ	50	50
TOTAL NUMBER		1	3

REMARKS: CONTROLLED BY MANUFACTURER'S THERMOSTAT MOUNTED 1500 A.F.F. UNDER HEATER.

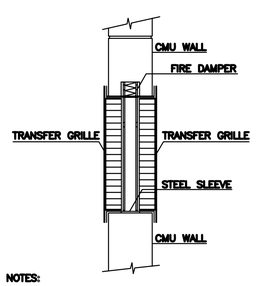

NOTES:
1- SEE MECH. FOR LOCATIONS, MOUNTING INFORMATION, AND GRILLES REQUIRING FIRE DAMPERS.

TYPICAL TRANSFER GRILLE

SCALE: N.T.S

EXHAUST FAN SCHEDULE (EF)

UNIT NUMBER	SERVICE	TYPE	AIR QUANTITY		MINIMUM WHEEL DIAMETER		FAN	STATIC PRESSURE		ELECTRICAL DATA				TEMP CONTROL DIAGRAM	INTERLOCK WITH	DRIVE TYPE	REMARKS
			CMH	CFM	MM	INCHES	RPM	mmH20	IN W.G.	H.P.	VOLTS	PHASE	HERTZ				
EF-DF-01	VENT	W-CTFG-GP	170	100	NA	NA	1550	2.54	0.1	1/60	220	1	50	NONE	SWITCH	DIRECT	NOTES 1, 2
EF-DF-02	VENT	W-CTFG-GP	170	100	NA	NA	1550	2.54	0.1	1/60	220	1	50	NONE	SWITCH	DIRECT	NOTES 1, 2
EF-DF-03	VENT	R-CTFG-UB	6100	3600	NA	NA	1306	17.7	0.7	1	220	1	50	NONE	SWITCH	BELT	NOTES 2, 3
EF-DF-04	VENT	R-CTFG-UB	3500	2100	NA	NA	1565	17.7	0.7	1/2	220	1	50	NONE	SWITCH	BELT	NOTES 2, 3
EF-DF-05	VENT	R-CTFG-UB	1770	1040	NA	NA	1542	6.35	0.25	1/4	220	1	50	NONE	SWITCH	BELT	NOTES 2, 3

MANUFACTURER SHALL PROVIDE NECESSARY TRANSFORMERS ON ALL UNITS TO MEET ELECTRICAL REQUIREMENT.
NOTE 1. SUPPLIED WITH BACKDRAFT DAMPER
NOTE 2. ALL EXHAUST FANS WITH SINGLE PHASE POWER ARE TO BE PROVIDED w/ A FACTORY MOUNTED DISCONNECT SWITCH.
NOTE 3. PROVIDE FACTORY ROOF CURB.

FAN SCHEDULE TYPE - LEGEND
(REF. EXHAUST AND SUPPLY FAN SCHEDULES)
R-CTFG-GP
R =ROOF
W =WALL
IL =INLINE
CL =CEILING
GP = GENERAL PURPOSE
EP = EXPLOSION PROOF
DB = DOWN BLAST
UB = UP BLAST
UT = UTILITY SET
CTFG = CENTRIFUGAL
PROP = PROPELLER
TUBA = TUBE AXIAL

UNLESS OTHERWISE NOTED, LINEAR DIMENSIONS SHOWN ARE IN MILLIMETERS.

SYMBOL	DESCRIPTION	DATE	APPR.

Designed By:
Drawn By:
Date: 10 MAY 2007
File No. AF0707
Checked By:
I.S.O. Sheet File Name: AF0707CE-MH01PN.dwg
Solicitation Number: -

US Army Corps of Engineers Transatlantic Programs Center

ANA REGIONAL BRIGADE
PAKTIKA, AFGHANISTAN
EMBEDDED TRAINING FACILITY
DFAC 2
HVAC PLAN
- -

SHEET REFERENCE NUMBER:
CE-MH-01

$DATE$
$FILE$

D SIZE BORDER
32 X 20.5

ABBREVIATIONS

ABV. CLG	:–	ABOVE CEILING
AFF	:–	ABOVE FINISH FLOOR
AHU	:–	AIR HANDLING UNIT
AMPS	:–	AMPERES
B.D	:–	BACKDRAFT DAMPER
B.H	:–	BASE BOARD HEATER
B.M.O	:–	BELL MOUTH OPENING
BOP	:–	BOTTOM OF PIPE
BTU/H	:–	BRITISH THERMAL UNITS PER HOUR
CD	:–	CONDENSATE DRAIN
CF	:–	CEILING FAN
C.F.M	:–	CUBIC FEET PER MINUTE
C.M.H	:–	CUBIC METER PER HOUR
CONN	:–	CONNECTION
CORR	:–	CORRUGATED
CU	:–	CONDENSING UNIT
DB	:–	DRY BULB
DH	:–	DIESEL UNIT HEATER
DIA	:–	DIAMETER
D.L	:–	DOOR LOUVER
DT	:–	DAY TANK
DWG	:–	DRAWING
EF	:–	EXHAUST FAN
EL	:–	EXHAUST LOUVER
ENT	:–	ENTERING
EXH.G	:–	EXHAUST GRILLE
EXT	:–	EXTERNAL
F.A.D	:–	FRESH AIR DUCT
FD	:–	FIRE DAMPER
FLA	:–	FULL LOAD AMPERES
FOR	:–	FUEL OIL RETURN
FO	:–	FUEL OIL
FOS	:–	FUEL OIL SUPPLY
FPM	:–	FEET PER MINUTE
FT	:–	FEET
GALV	:–	GALVANIZED
HP	:–	HORSE POWER
KW	:–	KILO WATTS
LD	:–	LEAK DETECTOR
L/S	:–	LITERS PER SECOND
LT	:–	LEVEL TRANSMITTER

ABBREVIATIONS

LVG	:–	LEAVING
MRAD	:–	MOTORIZED RETURN (RECIRCULATION)
MAID	:–	MOTORIZED AIR INTAKE DAMPER
MEAD	:–	MOTORIZED EXHAUST AIR DAMPER
M.D	:–	MOTORIZED DAMPER
mm	:–	MILLIMETERS
MPS	:–	METERS PER SECOND
NC	:–	NORMALLY CLOSED
NO	:–	NORMALLY OPEN
OC	:–	ON CENTERS
OSA	:–	OUTSIDE AIR
P	:–	PUMP
PACU	:–	PACKAGE AIR CONDITIONING UNIT
P.S	:–	POWER SUPPLY
R.C.D	:–	RETURN CEILING DIFFUSER
R.D	:–	RETURN AIR DUCT
RED	:–	REDUCTION/REDUCER
R.G	:–	RETURN GRILLE
RPM	:–	REVOLUTIONS PER MINUTE
RS	:–	REFRIGERANT SUCTION
RL	:–	REFRIGERANT LIQUID
S.C.D	:–	SUPPLY CEILING DIFFUSER
S.D	:–	SUPPLY DUCT
SF	:–	SUPPLY FAN
S.G	:–	SUPPLY GRILLE
SM.D	:–	SMOKE DETECTOR
SP	:–	STATIC PRESSURE
SQ	:–	SQUARE
SR	:–	SHORT RADIUS
S.R–X	:–	SUPPLY REGISTER TYPE–X
SS	:–	STAINLESS STEEL
SU	:–	SPLIT UNIT
T	:–	SPACE THERMOSTAT
T.G	:–	TRANSFER GRILLE
TOS	:–	TOP OF SUPPORT
TYP	:–	TYPICAL
U.C	:–	UNDER CUT
UH	:–	UNIT HEATER
V.D	:–	VOLUME DAMPER
WB	:–	WET BULB
WG	:–	WATER GAGE

NOTES:

1– ALL DIMENSIONS ARE IN MM UNLESS OTHERWISE NOTED.

2– DUCT DIMENSION INDICATES INSIDE DIMENSIONS.

3– EXACT LOCATIONS OF POWER SUPPLY POINTS, CONTROL PANEL AND MOTOR SWITCH TO BE TAKEN FROM ELECTRICAL DESIGN DRAWINGS.

4– THERMOSTAT HEIGHT IS 1525mm ABOVE F.F.L.

5– ALL EXTERIOR SUPPLY DUCTS WILL BE INSULATED WITH 50 mm THICK. MINERAL FIBER AND SHALL BE COVERED WITH METAL CLADDING.

6– ALL MENTIONED HEIGHTS ARE MEASURED FROM F.F.L.

7– INSULATE ALL THE SUPPLY DUCT WITH 50mm(2") INSULATION THICKNESS, 16kg/m³ FIBERGLASS.

SYMBOLS

:– SWITCH

:– THERMOSTAT

:– TEMPERATURE SENSOR

:– MOTORIZED DAMPER

:– CARBON MONOXIDE SENSOR

:– CEILING FAN

:– THRU WALL EXHAUST FAN

:– BASE BOARD HEATER

:– UNIT HEATER

:– DIESEL UNIT HEATER

:– OUTSIDE INTAKE LOUVER

:– GRAVITY RIDGE VENT

:– EXHAUST ROOF FAN

:– SUPPLY ROOF FAN

:– SPLIT UNIT

:– CONDENSING UNIT

F.F.L xx :– FINISH FLOOR LEVEL IN (m) MEASURED FROM REFRENCE +0.00 LEVEL

:– SUPPLY SECTION FAN

:– FIRE DAMPER

:– VOLUME DAMPER

:– DOOR LOUVER

:– UNDER CUT

EQUIPMENT IDENTIFICATION

XX–XX–XX

- UNIT NUMBER
- BUILDING ABBREVIATION
- EQUIPMENT TYPE

DUCTWORK

SUPPLY AIR DIFFUSER – ARROWS INDICATE PATTERN. NO PATTERN SHOWN EQUALS 4–WAY.

RETURN AIR GRILLE

EXHAUST GRILLE

SUPPLY AIR SLOT

RETURN AIR SLOT

ROUND DUCTWORK. DIAMETER INDICATED IN MILLIMETER

RECTANGULAR DUCTWORK. SIZE INDICATED IN INCHES, FIRST NUMBER IS SIDE SHOWN.

FLEXIBLE DUCT

SUPPLY OR OUTSIDE AIR DUCT

RETURN AIR DUCT.

RELIEF OR EXHAUST AIR DUCT.

90 DEGREE DUCTWORK ELBOW.

RADIUS DUCTWORK ELBOW – ROUND OR RECTANGULAR.

RECTANGULAR DUCTWORK BRANCH TAKE–OFF WITH 45 DEGREE BRANCH INLET.

FLARED SPIN–IN WITH DAMPER AND FLEX DUCT (DIFFUSER CONNECTION).

ROUND DUCT BRANCH TAKE–OFF FROM RECTANGULAR MAIN WITH CONICAL TAP.

DUCTWORK SIZE TRANSITION.

DUCT PRESSURE CLASS. POINT OF CHANGE IN DUCT CONSTRUCTION.

FLEXIBLE DUCT CONNECTION

SUPPLY OR OUTSIDE AIR DUCT UP

SUPPLY OR OUTSIDE AIR DUCT DOWN

RETURN AIR DUCT UP

RETURN AIR DUCT DOWN

RELIEF OR EXHAUST AIR DUCT UP

RELIEF OR EXHAUST AIR DUCT DOWN

IN–LINE 90 DEGREE DROP (RISE) IN DUCT

UP INCLINED RISE IN DUCT

DN INCLINED DROP IN DUCT

TURNING VANES

DUCT EXTRACTOR

SPLITTER DAMPER

AD ACCESS DOOR

UNLESS OTHERWISE NOTED, LINEAR DIMENSIONS SHOWN ARE IN MILLIMETERS.

SYMBOL	DESCRIPTION	DATE	APR

Designed By:
Drawn By:
Checked By:
Date: 10 MAY 2007
File No. AF0707
I.S.O. Sheet File Name: AF0707CE–MH01GN.dwg
Solicitation Number: –

US Army Corps of Engineers Transatlantic Programs Center

ANA REGIONAL BRIGADE
PAKTIKA, AFGHANISTAN
EMBEDDED TRAINING FACILITY
DFAC 2
HVAC LEGEND
– –

SHEET REFERENCE NUMBER:
CE–GM–01

$DATE$
$FILE$

D SIZE BORDER
32 X 20.5

HOOD H-1 NOTES

1. KITCHEN VENTILATION HOOD SHALL BE CONSTRUCTED OF 304 STAINLESS STEEL AND HAVE A TOTAL LENGTH OF 3600, WIDTH OF 1000 AND DEPTH OF 600. THE ASSEMBLY AT JOINTS AND SEAMS ON THE HOOD SHALL BE LIQUID TIGHT. THE EXPOSED EXTERNAL WELDS SHALL BE GROUND DOWN, SMOOTHED AND HIGHLY POLISHED. CONSTRUCTION SHALL INCLUDE GALVANIZED STRUCTURAL STEEL FRAMING MEMBERS AS REQUIRED TO PREVENT FLEXING AND FATIGUE OF HOOD. THE HOOD SHALL INCLUDE A FILTER HOUSING CONSTRUCTED OF THE SAME MATERIALS AS THE HOOD COMPLETE WITH STAINLESS STEEL U.L. CLASSIFIED GREASE FILTERS OF SUFFICIENT NUMBERS AND SIZES TO INSURE OPTIMUM PERFORMANCE AS SPECIFIED BY EXTRACTOR MANUFACTURER. THE FILTER HOUSING SHALL TERMINATE INTO A PITCHED INTERNAL FULL LENGTH GREASE TROUGH WIHICH SHALL DRAIN INTO A REMOVABLE RECESSED ONE CUP CAPACITY GREASE DRAWER. VAPORPROOF U.L. LISTED, MARINE INCANDESCENT LIGHT FIXTURES SHALL BE PREWIRED AT APPROXIMATELY 900 CENTERS. THE LIGHTS SHALL BE PREWIRED TO A JUNCTION BOX SITUATED AT THE TOP OF THE HOOD FOR FIELD CONNECTION TO POWER. THE WIRING SHALL CONFORM TO THE REQUIREMENTS OF THE INTERNATIONAL ELECTRIC CODE. THE HOOD SHALL BE FABRICATED IN ACCORDANCE WITH NFPA 96, AND SHALL BE U.L. LISTED OR U.L. CLASSIFIED AS REQUIRED.

2. THE KITCHEN HOOD SHALL HAVE A PRE-ENGINEERED RESTAURANT AUTOMATIC FIRE SUPPRESSION SYSTEM USING A WET CHEMICAL AGENT FOR GREASE RELATED FIRES. THE SYSTEM SHALL BE CAPABLE OF SUPPRESSING FIRES IN THE FOLLOWING AREAS ASSOCIATED WITH COOKING EQUIPMENT; VENTILATING EQUIPMENT INCLUDING HOODS, DUCTS, PLENUMS, AND FILTERS; FRYERS AND RANGES. THE BASIC SYSTEM SHALL CONSIST OF AN ANSUL AUTOMATIC REGULATED RELEASE ASSEMBLY WHICH INCLUDES A REGULATED RELEASE MECHANISM AND A WET CHEMICAL STORAGE TANK HOUSED WITHIN A SINGLE ENCLOSURE. NOZZLES, BLOW OFF CAPS, DETECTORS, CARTRIDGES, AGENT, FUSIBLE LINKS, AND PULLEY ELBOWS SHALL BE SUPPLIED IN SEPARATE PACKAGES IN THE QUANTITIES NEEDED FOR FIRE SUPPRESSION SYSTEM ARRANGEMENTS. ADDITIONAL EQUIPMENT SHALL INCLUDE REMOTE MANUAL PULL STATION, AND ELECTRICAL SWITCHES FOR AUTOMATIC EQUIPMENT SHUT OFF. WET CHEMICAL SYSTEM SHALL COMPLY WITH NFPA 17A.

3. ALL EXHAUST DUCT WORK FOR EXHAUST HOOD SHALL 16 GAUGE GALVANIZED STEEL. ALL SEAMS AND JOINTS SHALL BE MADE LIQUID TIGHT WITH A CONTINUOUS EXTERNAL WELD. ALL SECTIONS OF THE DUCT SYSTEM SHALL BE CONSTRUCTED AND INSTALLED WITHOUT FORMING DIPS AND TRAPS AND SHALL SLOPE NOT LESS THAN 1 INCH PER FOOT TOWARD THE HOOD.

4. KITCHEN HOOD EXHAUST FAN EF-DF-3 SHALL COME SUPPLIED WITH ROOF CURB FROM FANS MANUFACTURER WITH EXTENSION SO THAT THE FANS DISCHARGE IS A MINIMUM OF 40 INCHES ABOVE ROOF.

HOOD H-2 NOTES

1. KITCHEN VENTILATION HOOD SHALL BE CONSTRUCTED OF 304 STAINLESS STEEL AND HAVE A TOTAL LENGTH OF 2100, WIDTH OF 1000 AND DEPTH OF 600. THE ASSEMBLY AT JOINTS AND SEAMS ON THE HOOD SHALL BE LIQUID TIGHT. THE EXPOSED EXTERNAL WELDS SHALL BE GROUND DOWN, SMOOTHED AND HIGHLY POLISHED. CONSTRUCTION SHALL INCLUDE GALVANIZED STRUCTURAL STEEL FRAMING MEMBERS AS REQUIRED TO PREVENT FLEXING AND FATIGUE OF HOOD. THE HOOD SHALL INCLUDE A FILTER HOUSING CONSTRUCTED OF THE SAME MATERIALS AS THE HOOD COMPLETE WITH STAINLESS STEEL U.L. CLASSIFIED GREASE FILTERS OF SUFFICIENT NUMBERS AND SIZES TO INSURE OPTIMUM PERFORMANCE AS SPECIFIED BY EXTRACTOR MANUFACTURER. THE FILTER HOUSING SHALL TERMINATE INTO A PITCHED INTERNAL FULL LENGTH GREASE TROUGH WIHICH SHALL DRAIN INTO A REMOVABLE RECESSED ONE CUP CAPACITY GREASE DRAWER. VAPORPROOF U.L. LISTED, MARINE INCANDESCENT LIGHT FIXTURES SHALL BE PREWIRED AT APPROXIMATELY 900 CENTERS. THE LIGHTS SHALL BE PREWIRED TO A JUNCTION BOX SITUATED AT THE TOP OF THE HOOD FOR FIELD CONNECTION TO POWER. THE WIRING SHALL CONFORM TO THE REQUIREMENTS OF THE INTERNATIONAL ELECTRIC CODE. THE HOOD SHALL BE FABRICATED IN ACCORDANCE WITH NFPA 96, AND SHALL BE U.L. LISTED OR U.L. CLASSIFIED AS REQUIRED.

2. THE KITCHEN HOOD SHALL HAVE A PRE-ENGINEERED RESTAURANT AUTOMATIC FIRE SUPPRESSION SYSTEM USING A WET CHEMICAL AGENT FOR GREASE RELATED FIRES. THE SYSTEM SHALL BE CAPABLE OF SUPPRESSING FIRES IN THE FOLLOWING AREAS ASSOCIATED WITH COOKING EQUIPMENT; VENTILATING EQUIPMENT INCLUDING HOODS, DUCTS, PLENUMS, AND FILTERS; FRYERS AND RANGES. THE BASIC SYSTEM SHALL CONSIST OF AN ANSUL AUTOMATIC REGULATED RELEASE ASSEMBLY WHICH INCLUDES A REGULATED RELEASE MECHANISM AND A WET CHEMICAL STORAGE TANK HOUSED WITHIN A SINGLE ENCLOSURE. NOZZLES, BLOW OFF CAPS, DETECTORS, CARTRIDGES, AGENT, FUSIBLE LINKS, AND PULLEY ELBOWS SHALL BE SUPPLIED IN SEPARATE PACKAGES IN THE QUANTITIES NEEDED FOR FIRE SUPPRESSION SYSTEM ARRANGEMENTS. ADDITIONAL EQUIPMENT SHALL INCLUDE REMOTE MANUAL PULL STATION, AND ELECTRICAL SWITCHES FOR AUTOMATIC EQUIPMENT SHUT OFF. WET CHEMICAL SYSTEM SHALL COMPLY WITH NFPA 17A.

3. ALL EXHAUST DUCT WORK FOR EXHAUST HOOD SHALL 16 GAUGE GALVANIZED STEEL. ALL SEAMS AND JOINTS SHALL BE MADE LIQUID TIGHT WITH A CONTINUOUS EXTERNAL WELD. ALL SECTIONS OF THE DUCT SYSTEM SHALL BE CONSTRUCTED AND INSTALLED WITHOUT FORMING DIPS AND TRAPS AND SHALL SLOPE NOT LESS THAN 1 INCH PER FOOT TOWARD THE HOOD. VENTILATION SYSTEM SHALL COMPLY WITH NFPA 96.

4. HOOD EXHAUST FAN EF-DF-4 SHALL COME SUPPLIED WITH ROOF CURB FROM FANS MANUFACTURER WITH EXTENSION SO THAT THE FANS DISCHARGE IS A MINIMUM OF 40 INCHES ABOVE ROOF.

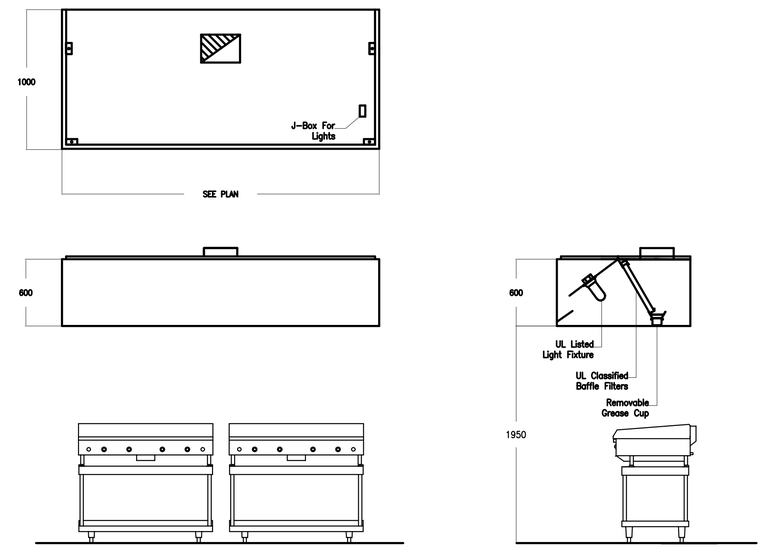

TYPICAL HOOD DETAIL
N.T.S.

UNLESS OTHERWISE NOTED, LINEAR DIMENSIONS SHOWN ARE IN MILLIMETERS.

SYMBOL	DESCRIPTION	DATE	APR

Designed By:
Drawn By:
Checked By:
Date: 10 MAY 2007
File No. AF0707
I.S.O. Sheet File Name: AF0707CE-MH01GK.dwg
Solicitation Number: –

US Army Corps of Engineers Transatlantic Programs Center

ANA REGIONAL BRIGADE
PAKTIKA, AFGHANISTAN
EMBEDDED TRAINING FACILITY
DFAC 2
KITCHEN HOOD NOTES
– –

SHEET REFERENCE NUMBER:
CE-MK-02

$DATE$
$FILE$

D SIZE BORDER
32 X 20.5

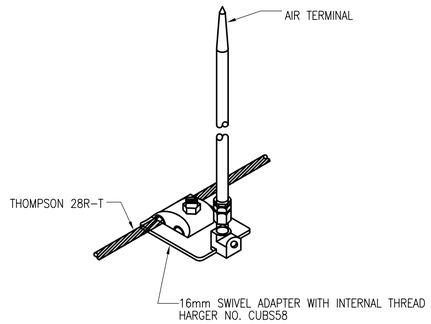

1 AIR TERMINAL MOUNTING DETAIL

SCALE: N.T.S

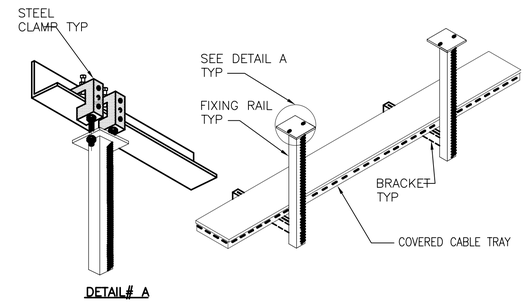

2 CABLE TRAY SUPPORT DETAIL

SCALE: N.T.S

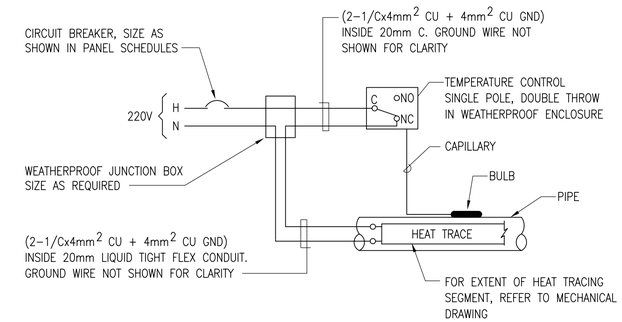

3 HEAT TRACE CONTROL DIAGRAM

SCALE: N.T.S

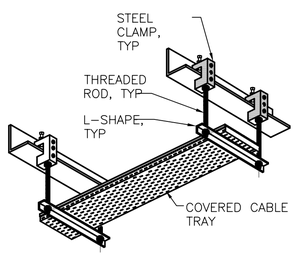

4 CABLE TRAY SUPPORT DETAIL

SCALE: N.T.S

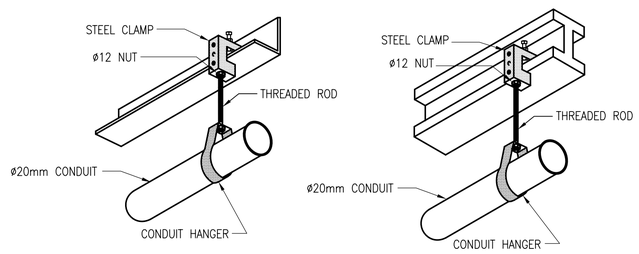

5 SUPPORT OF CONDUIT FROM STEEL STRUCTURE

SCALE: N.T.S

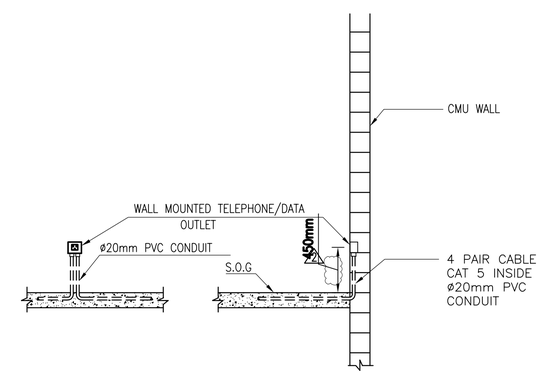

6 GENERAL INSTALLATION DETAIL FOR RECESSED TELEPHONE/ DATA OUTLET (CONDUIT EMBEDDED IN SLAB)

SCALE: N.T.S

UNLESS OTHERWISE NOTED, LINEAR DIMENSIONS SHOWN ARE IN MILLIMETERS.

SYMBOL	DESCRIPTION	DATE	APP

Designed By:
Drawn By:
Checked By:
Date: 10 MAY 2007
File No. AF0707
I.S.O. Sheet File Name: AF0707CE-EL0301.dwg
Solicitation Number: –

US Army Corps of Engineers Transatlantic Programs Center

ANA REGIONAL BRIGADE
PAKTIKA, AFGHANISTAN
EMBEDDED TRAINING FACILITY
DFAC 2
ELECTRICAL DETAILS

SHEET REFERENCE NUMBER:
CE-DE-03

$DATE$
$FILE$

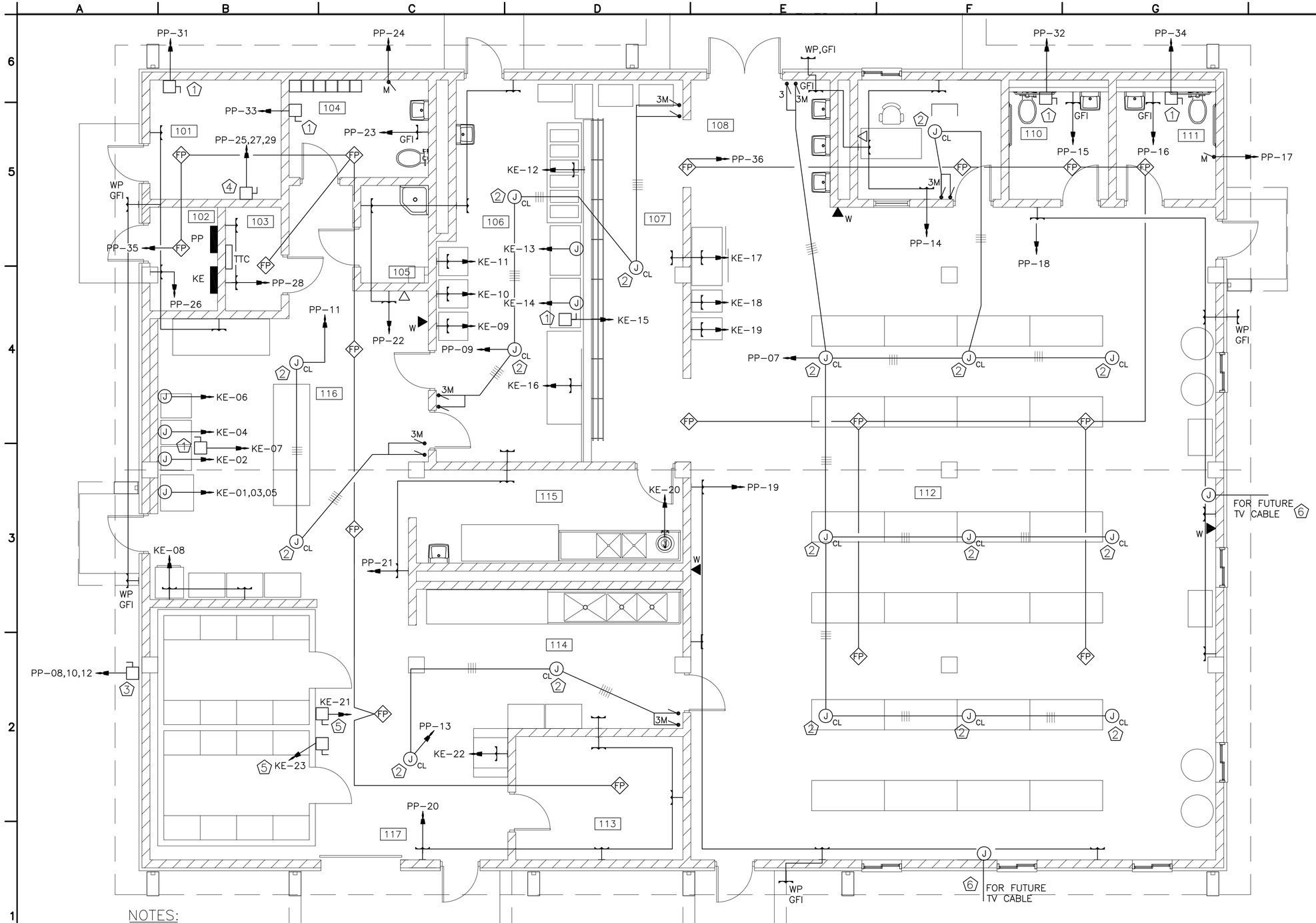

NOTES:

SEE CE-GE-02 FOR BRANCH CIRCUITS WIRING SCHEDULE WITH CONDUIT SIZES.

1. PROVIDE 1P, 20A, 220V NONFUSED DISCONNECT IN NEMA TYPE 1 ENCLOSURE.
2. J-BOX FOR CEILING FAN/LIGHT FIXTURE. SEE MECHANICAL SCHEDULES AND DETAILS.
3. PROVIDE 3P, 20A, 380V NONFUSED DISCONNECT IN NEMA TYPE 4X ENCLOSURE.
4. PROVIDE 3P, 30A, 380V NONFUSED DISCONNECT IN NERA TYPE 1 ENCLOSURE.
5. PROVIDE 1P, 40A, 220V NONFUSED DISCONNECT IN NEMA TYPE 1 ENCLOSURE.
6. EXTEND 13MM CONDUIT 1.5M OUTSIDE OF BLDG., 305MM BELOW GRADE.

1 ELECTRICAL POWER PLAN

CE-E-02 SCALE: 1:50

1000 0 1000mm
SCALE: 1 = 50

UNLESS OTHERWISE NOTED, LINEAR DIMENSIONS SHOWN ARE IN MILLIMETERS.

SYMBOL	DESCRIPTION	DATE	APP

Designed By:
Drawn By:
Checked By:
Date: 10 MAY 2007
File No. AF0707
I.S.O. Sheet File Name: AF0707CE-EL02PN.dwg
Solicitation Number: -

US Army Corps of Engineers Transatlantic Programs Center

ANA REGIONAL BRIGADE
PAKTIKA, AFGHANISTAN
EMBEDDED TRAINING FACILITY
DFAC 2
ELECTRICAL POWER PLAN

SHEET REFERENCE NUMBER:
CE-E-02

$DATE$
$FILE$

LIGHTING FIXTURE SCHEDULE

TYPE	DESCRIPTION	NO. OF LAMPS	LAMP TYPE	WATTS PER LAMP	VOLTAGE	MOUNTING
A	PENDANT MOUNTED INDUSTRIAL FLUORESCENT LIGHT FIXTURE WITH WIDE DISTRIBUTION REFLECTOR KIT	2	T8	36	220/50HZ	PENDANT
A1	SURFACE MOUNTED INDUSTRIAL FLUORESCENT LIGHT FIXTURE WITH WIDE DISTRIBUTION REFLECTOR KIT	2	T8	36	220/50HZ	SURFACE
B	SURFACE/PENDANT MOUNTED PRISTMIC REFLECTOR	2	T8	36	220/50HZ	SURFACE/PENDENT
B1	SURFACE MOUNTED VIRTUALLY UNBREAKABLE DIFFUSER, SOLID STEEL BODY AND FRAME, HIGH SECURITY STAINLESS BOLTS	2	T8	36	220/50HZ	SURFACE/PENDENT
C	PENDANT MOUNTED FLUORESCENT LIGHT FIXTURE WITH REFLECTOR AND ACRYLIC LENS	4	T8	36	220/50HZ	PENDANT
C1	SURFACE MOUNTED FLUORESCENT LIGHT FIXTURE WITH REFLECTOR AND ACRYLIC LENS	4	T8	36	220/50HZ	SURFACE
D	SURFACE/PENDANT MOUNTED FIXTURE SPECIAL FOR WET LOCATION	2	T8	40	220/50HZ	SURFACE
E	SURFACE/WALL MOUNTED FIXTURE SPECIAL FOR WET LOCATION	2	T8	36	220/50HZ	SURFACE OR WALL
F	WALL MOUNTED COMPACT FLUOR.	1	CF	26	220/50HZ	WALL
G	PENDANT MOUNTED INDUSTRIAL LOW BAY FIXTURE	1	HPS	150	220/50HZ	PENDANT
G1	PENDANT MOUNTED INDUSTRIAL HIGH BAY FIXTURE	1	HPS	150	220/50HZ	PENDANT
G2	PENDANT MOUNTED INDUSTRIAL LOW BAY FIXTURE	1	HPS	250	220/50HZ	PENDANT
J	EXPLOSION PROOF SURFACE MOUNTED FLUOR. FIXTURE	2	INCLUDED	36	220/50HZ	SURFACE
X1	EXIT SIGN WITH DIRECTIONAL ARROWS AS REQUIRED	2	INCLUDED	8	220/50HZ	UNIVERSAL
X2	EMERGENCY FIXTURE WITH HALOGEN LAMPS	2	HALOGEN	20	220/50HZ	WALL/SURFACE
X3	EXPLOSION PROOF EMERGENCY FIXTURE WITH HALOGEN LAMPS	2	HALOGEN	14	220/50HZ	WALL/SURFACE

BRANCH CIRCUITS WIRE SCHEDULE

220 VOLT 1ø, 3W. CIRCUITS

CIRCUIT BREAKER	CONDUCTOR
20A–1P	2 #4mm² & 1 #4mm² GND. – 20mm C.
30A–1P	2 #6mm² & 1 #6mm² GND. – 20mm C.
40A–1P	2 #10mm² & 1 #6mm² GND. – 20mm C.
50A–1P	2 #16mm² & 1 #6mm² GND. – 25mm C.
60A–1P	2 #25mm² & 1 #10mm² GND. – 25mm C.
80A–1P	2 #35mm² & 1 #10mm² GND. – 25mm C.
100A–1P	2 #50mm² & 1 #10mm² GND. – 32mm C.

380 VOLT, 3ø, 4W. CIRCUITS

20A–3P	3 #4mm² & 1 #4mm² GND. – 20mm C.
30A–3P	3 #6mm² & 1 #6mm² GND. – 20mm C.
40A–3P	3 #10mm² & 1 #6mm² GND. – 20mm C.
50A–3P	3 #16mm² & 1 #6mm² GND. – 38mm C.
60A–3P	3 #25mm² & 1 #10mm² GND. – 38mm C.
80A–3P	3 #35mm² & 1 #10mm² GND.–38mmC.
100A–3P	3 #50mm² & 1 #10mm² GND.–40mmC.

380 VOLT, 3ø,5W. CIRCUITS

20A–3P	4 #4mm² & 1 #4mm² GND. – 20mm C.
30A–3P	4 #6mm² & 1 #6mm² GND. – 20mm C.
40A–3P	4 #10mm² & 1 #6mm² GND. – 32mm C.
50A–3P	4 #16mm² & 1 #6mm² GND. – 38mm C.
60A–3P	4 #25mm² & 1 #10mm² GND. – 38mm C.

NOTE:

1. TYPE MC CABLE SHALL INCLUDE FULL SIZE INSULATED GROUND CONDUCTOR. SIZES AS INDICATED IN SCHEDULE.

UNLESS OTHERWISE NOTED, LINEAR DIMENSIONS SHOWN ARE IN MILLIMETERS.

SYMBOL	DESCRIPTION	DATE	APP

Designed By:
Date: 10 MAY 2007
Drawn By:
File No. AF0707
Checked By:
I.S.O. Sheet File Name: AF0707CE–EL02ON.dwg
Solicitation Number: –

US Army Corps of Engineers Transatlantic Programs Center

ANA REGIONAL BRIGADE
PAKTIKA, AFGHANISTAN
EMBEDDED TRAINING FACILITY
DFAC 2
ELECTRICAL
FIXTURE SCHEDULE AND BRANCH CIRCUIT

SHEET REFERENCE NUMBER:
CE–GE–02

$DATE$
$FILE$

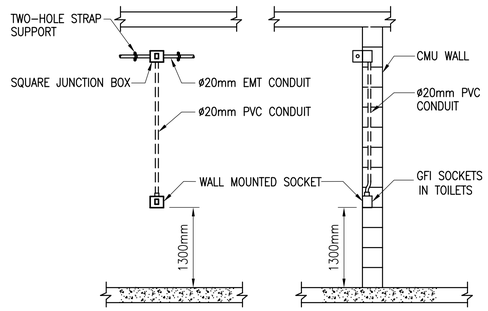

1 GENERAL INSTALLATION DETAIL FOR RECESSED SURFACE MOUNTED SOCKET IN TOILETS

SCALE: N.T.S

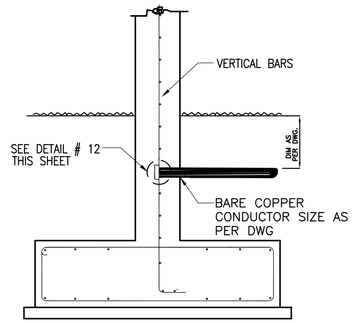

2 TYPICAL STRUCTURAL BONDING DETAIL

SCALE: N.T.S

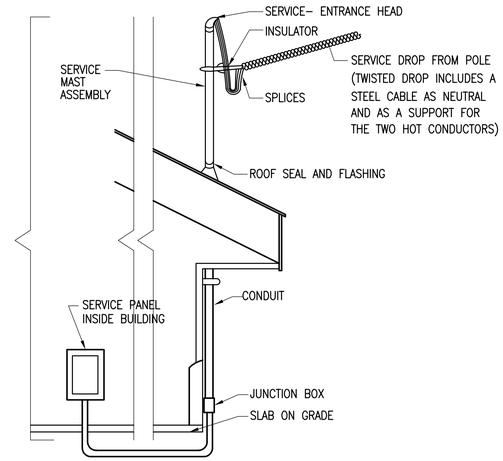

3 PANEL BOARD FEEDING FROM BOTTOM (FOR PANELS NOT IN EXTERIOR WALL)

SCALE: N.T.S.

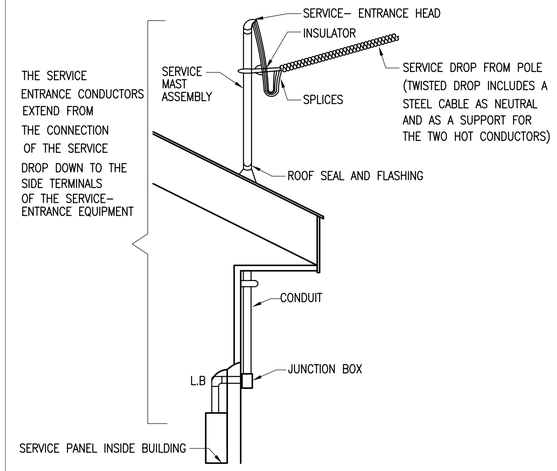

4 PANEL BOARD FEEDING FROM TOP (FOR PANELS ON EXTERLOR WALL)

SCALE: N.T.S.

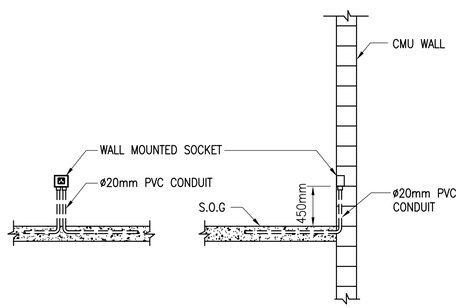

5 GENERAL INSTALLATION DETAIL FOR RECESSED SOCKET (CONDUIT EMBEDDED IN SLAB)

SCALE: N.T.S

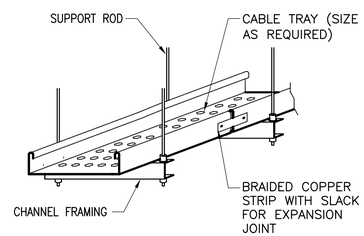

6 CABLE TRAY CROSSING EXPANSION JOINT

SCALE: N.T.S

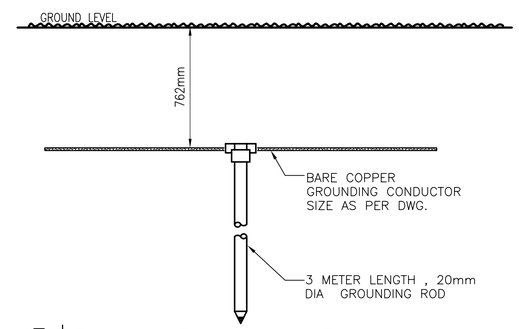

7 GROUND ROD INSTALLATION DETAIL

SCALE: N.T.S

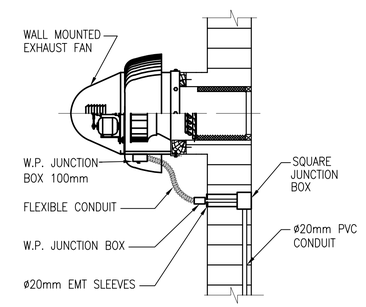

8 GENERAL INSTALLATION DETAIL FOR EXHAUST FAN (CONDUIT EMBEDDED)

SCALE: N.T.S

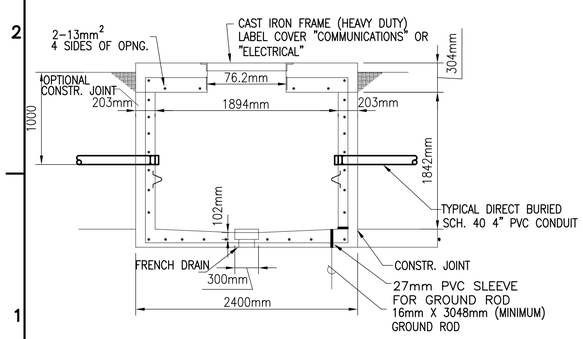

9 MANHOLE DETAIL (2400x2400mm)

SCALE: N.T.S.

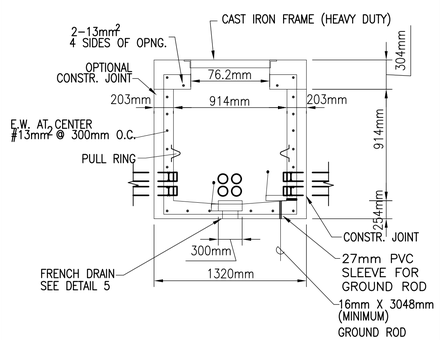

10 HAND HOLE DETAIL (1320x1320mm)

SCALE: N.T.S.

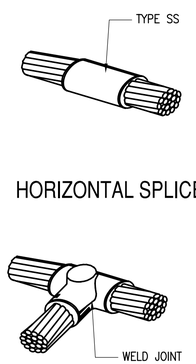

11 T-CONNECTION WELDING POINT

SCALE: N.T.S.

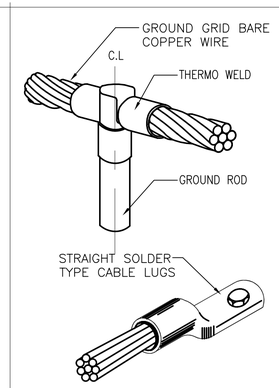

12 GROUNDING CABLE LUGS

SCALE: N.T.S.

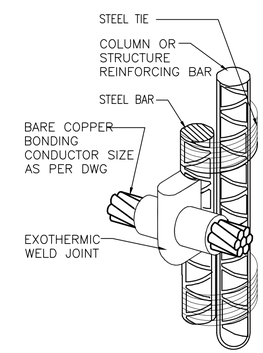

13 WELDING TO STEEL REINFORCING BAR

SCALE: N.T.S.

UNLESS OTHERWISE NOTED, LINEAR DIMENSIONS SHOWN ARE IN MILLIMETERS.

SYMBOL	DESCRIPTION	DATE	APP

Date: 10 MAY 2007
File No. AF0707
I.S.O. Sheet File Name: AF0707CE–EL02D1.dwg
Solicitation Number: –
Designed By:
Drawn By:
Checked By:

US Army Corps of Engineers Transatlantic Programs Center

ANA REGIONAL BRIGADE
PAKTIKA, AFGHANISTAN
EMBEDDED TRAINING FACILITY
DFAC 2
ELECTRICAL DETAILS

SHEET REFERENCE NUMBER:
CE–DE–02

$DATE$
$FILE$

PANEL "PP" SCHEDULE

400 AMPS MAIN CIRCUIT BREAKER 380DELTA/220 VOLTS 3 PHASE 5 WIRE 25,000 AIC

MOUNTING: SURFACE

NO	DESCRIPTION	BKR/P	VA A		VA B		VA C		BKR/P	DESCRIPTION	NO
1	LIGHTS - 108-112	20/1	544	61140					300/3	PANEL KE	2
3	LIGHTS - 101-107	20/1			832	48300					4
5	LIGHTS - 113-116	20/1					760	42200			6
7	LIGHTS/FANS - 112	20/1	1000	3000					20/3	DIESEL HEAT/EVAPORATOR UNIT	8
9	LIGHTS/FANS - 106,107	20/1			300	3000					10
11	LIGHTS/FANS - 116	20/1					200	3000			12
13	LIGHTS/FANS - 114,117	20/1	200	1650					20/1	RECEPS - 108,109, & EXTERIOR	14
15	RECEP - 110	20/1			330	330			20/1	RECEP - 111	16
17	EXHAUST FAN - 110,111	20/1					220	1560	20/1	RECEPS - 112 & EXTERIOR	18
19	RECEPS - 112 & EXTERIOR	20/1	1650	1650					20/1	RECEPS - 113,114,117	20
21	RECEPS - 106,115,116	20/1			990	1320			20/1	RECEPS - 105,106,116	22
23	RECEP - 104	20/1					330	220	20/1	EXHAUST FAN - 104	24
25			4000	1650					20/1	RECEPS - 101,102,116 & EXTERIOR	26
27	WATER HEATER - 101	30/3			4000	1500			20/1	RECEPS - 103	28
29							4000	2900	20/1	SPARE	30
31	UNIT HEATER - 101	40/1	6000	2000					20/1	UNIT HEATER - 110	32
33	UNIT HEATER - 104	20/1			2000	2000			20/1	UNIT HEATER - 111	34
35	FIRE DETECTION - 101-104,113,116	20/1					770	900	20/1	FIRE DETECTION - 107-109,112	36
37	SPARE	20/1	990	2000					20/1	SPARE	38
39	SPARE	20/1							20/1	SPARE	40
41	SPARE	20/1							20/1	SPARE	42
		TOTAL	87474		64902		57060				
CONNECTED KVA:		209.44 KVA									
CONNECTED AMPS		318.21 AMPS									

PANEL "KE" SCHEDULE

300 AMPS MAIN LUGS ONLY 380DELTA/220 VOLTS 3 PHASE 5 WIRE 10,000 AIC

MOUNTING: SURFACE

NO	DESCRIPTION	BKR/P	VA A		VA B		VA C		BKR/P	DESCRIPTION	NO
1	116 - ELECTRIC FRYER	40/3	5700	19000					100/1	116 - ELECTRIC RANGE-6 BURNER	2
3					5700	19000			100/1	116 - ELECTRIC RANGE-6 BURNER	4
5							5700	19000	100/1	116 - ELECTRIC RANGE	6
7	116 - HOOD (EF-DF-03)	20/1	2000	1500					20/1	116 - REFRIDGERATOR	8
9	106 - STEAMER - 12 PAN CAPACITY	40/1			6000	6000			40/1	106 - STEAMER - 12 PAN CAPACITY	10
11	106 - STEAMER - 12 PAN CAPACITY	40/1					6000	6000	40/1	106 - BUFFET	12
13	106 - ELECTRIC GRIDDLE	80/1	14250	14250					80/1	106 - ELECTRIC GRIDDLE	14
15	106 - HOOD (EF-DF-04)	20/1			2000	1400			20/1	106 - COLD FOOD	16
17	112 - REFRIDGERATED BEVERAGES	20/1					1500	4000	20/1	112 - COFFE BREWER	18
19	112 - ICED TEA BREWER	20/1	1800	2640					20/1	115 - GARBAGE DISPOSAL	20
21	117 - WALK-IN CHILLER & FRIDGE	40/1			7000	1200			20/1	117 - ICE MACHINE	22
23	117 - WALK-IN CHILLER & FRIDGE	40/1					7000		20/1	SPARE	24
25	SPARE	20/1							20/1	SPARE	26
27	SPARE	20/1							20/1	SPARE	28
29	SPARE	20/1							20/1	SPARE	30
		TOTAL	61140		48300		49200				
CONNECTED KVA:		158.64 KVA									
CONNECTED AMPS		241.03 AMPS									

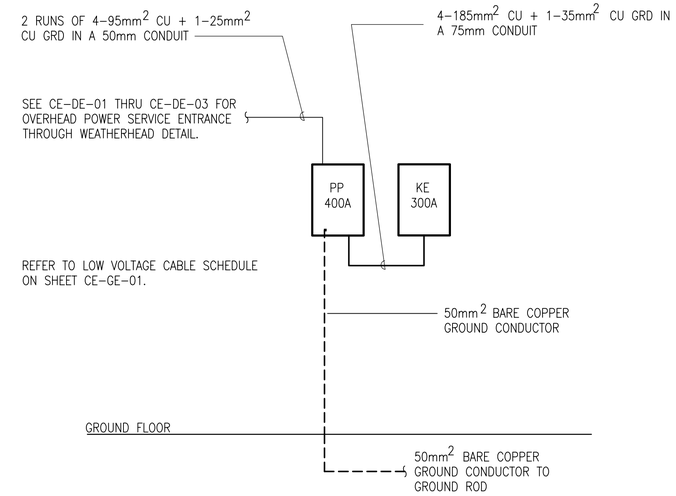

1 POWER RISER DIAGRAM

CE-SE-01 SCALE: N.T.S.

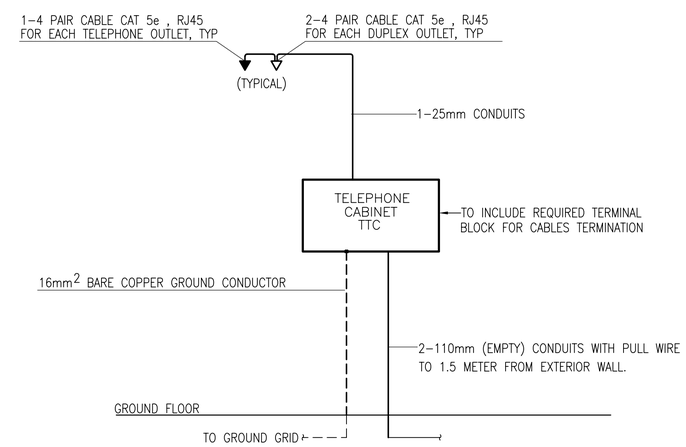

2 TELEPHONE RISER DIAGRAM

CE-SE-01 SCALE: N.T.S.

UNLESS OTHERWISE NOTED, LINEAR DIMENSIONS SHOWN ARE IN MILLIMETERS.

SYMBOL	DESCRIPTION	DATE	APP

Designed By:
Drawn By:
Checked By:
Date: 10 MAY 2007
File No. AF0707
I.S.O. Sheet File Name: AF0707CE-EL01SC.dwg
Solicitation Number: –

US Army Corps of Engineers Transatlantic Programs Center

ANA REGIONAL BRIGADE
PAKTIKA, AFGHANISTAN
EMBEDDED TRAINING FACILITY
DFAC 2
ELECTRICAL
PANEL SCHEDULES & RISERS

SHEET REFERENCE NUMBER:
CE-SE-01

$DATE$
$FILE$

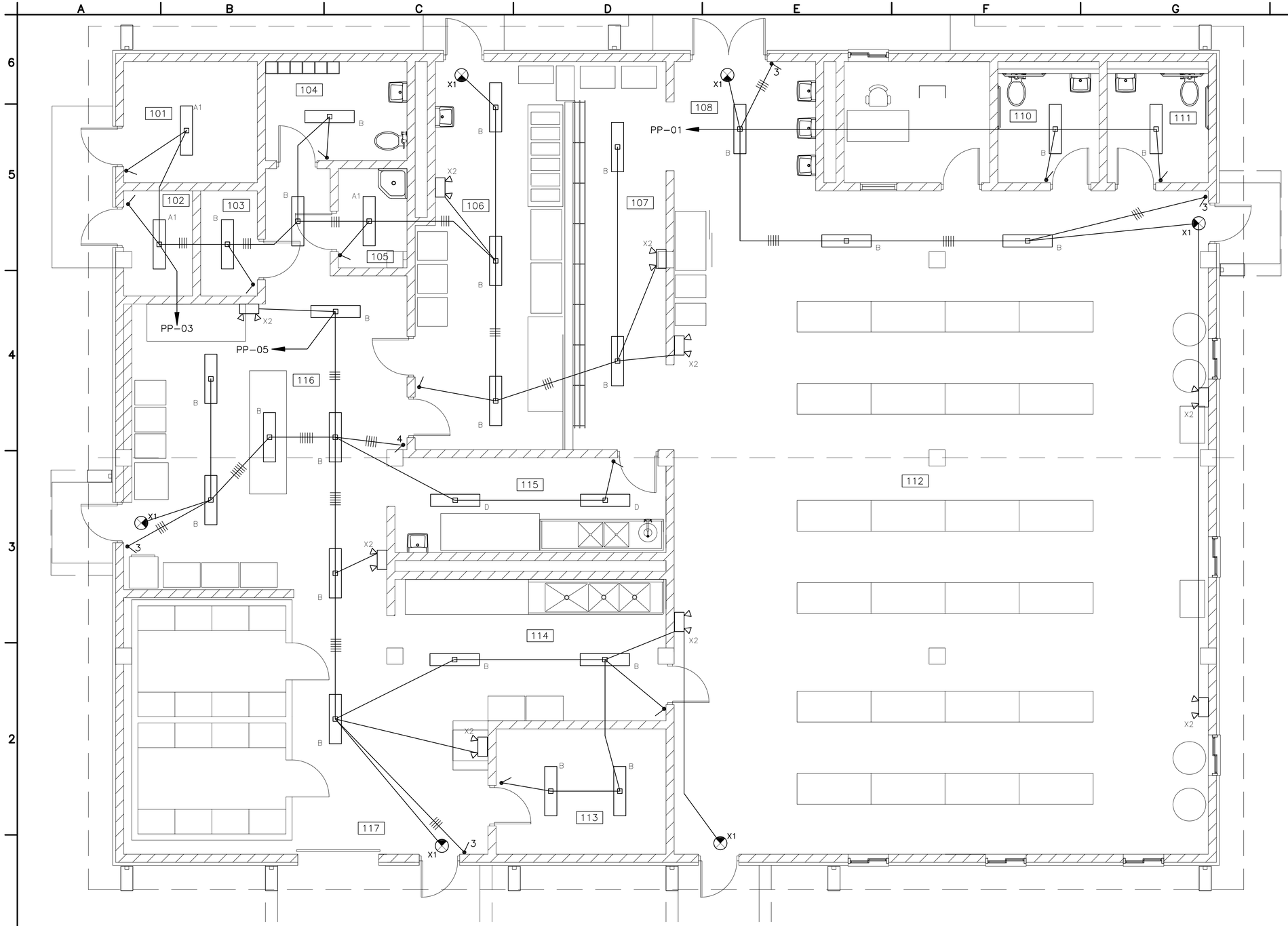

NOTES:

ALL ROOMS WITHOUT LIGHTING FIXTURE CONTAIN A CEILING FAN WITH LIGHT FIXTURE. SEE POWER PLAN CE-E-02

1 ELECTRICAL LIGHTING PLAN

CE-E-01 SCALE: 1:50

1000 0 1000mm
SCALE: 1 = 50

UNLESS OTHERWISE NOTED, LINEAR DIMENSIONS SHOWN ARE IN MILLIMETERS.

SYMBOL	DESCRIPTION	DATE	APP

Designed By:
Drawn By:
Checked By:
Date: 10 MAY 2007
File No. AF0707
I.S.O. Sheet File Name: AF0707CE-EL01PN.dwg
Solicitation Number: –

US Army Corps of Engineers Transatlantic Programs Center

ANA REGIONAL BRIGADE
PAKTIKA, AFGHANISTAN
EMBEDDED TRAINING FACILITY
DFAC 2
ELECTRICAL
LIGHTING PLAN

SHEET REFERENCE NUMBER:
CE-E-01

$DATE$
$FILE$

LIGHTING LEGEND:

	ONE LAMP FLUORESCENT L.F.
	TWO LAMPS FLUORESCENT L.F.
	FOUR LAMPS FLUORESCENT L.F.
	FLOOD LIGHT, WALL MOUNTED
	6 METER, LIGHTING POLE WITH FLOOD LIGHT
	MIRROR WALL MOUNTED LIGHT FIXTURE
	WALL MOUNTED FIXTURE
	PENDANT MOUNTED INDUSTRIAL, LOW/HIGH BAY L.F.
X1	SURFACE (WALL/CELING)ONE FACE EXIT SIGN WITH BACK UP BATTERY.
X2	WALL MOUNTED EMERGENCY LIGHT WITH BACK UP BATTERY.
D	DIMMING SWITCH, 220V, 16AMP MOUNTED HEIGHT = 1300mm ABOVE FINISH FLOOR LEVEL FROM THE CENTER OF SWITCH
	ONE WAY SWITCH, 220V, 16AMP MOUNTED HEIGHT = 1300mm ABOVE FINISH FLOOR LEVEL FROM THE CENTER OF SWITCH
3	3 WAY SWITCH, 220V, 16AMP MOUNTED HEIGHT = 1300mm ABOVE FINISH FLOOR LEVEL FROM THE CENTER OF SWITCH
4	4 WAY SWITCH, 220V, 16AMP MOUNTED HEIGHT = 1300mm ABOVE FINISH FLOOR LEVEL FROM THE CENTER OF SWITCH

LOW CURRENT LEGEND:

TTC	TELEPHONE TERMINAL CABINET, SEE NOTE 3
	EQUIPMENT AS IDENTIFIED ON PLANS
	TELPHONE/DATA OUTLET DUPLEX, RJ-45, 4 PAIR CATEGORY 5E, SEE NOTE 2 & 5
FP	FIRE ALARM BOX FOR FUTURE INSTALLATION OF SELF SMOKE DETECTOR. LOCATE BOX A MIN. OF 1.0M FROM TIP OF FAN BLADE.
	TELEPHONE OUTLET ,RJ-45,4 PAIR CATEGORY 5E, SEE NOTE #2, 5

GROUNDING LEGEND:

	3 METER LENGTH, 0.02m DIAMETER , COPPER GROUNDING ROD
	UNDERGROUND BARE COPPER CONDUCTOR FOR CONNECTION BETWEEN GROUNDING RODS SIZE AS INDICATED ON THE PLAN
T	T-SPLICE EXOTHERMIC WELD
	AIR TERMINAL

POWER LEGEND:

	ELECTRICAL PANEL BOARD, SEE NOTE 4
MDP	MAIN DISTRIBUTION PANEL (MDP)
	NON FUSED DISCONNECT SWITCH ,220V ,50HZ ,20A (U.O.N)
	COMBINATION MOTOR STARTER SWITCH ,220V ,50HZ ,20A (U.O.N)
M	MANUAL MOTOR STARTER, WITH OVER LOAD PROTECTION RATING AS REQUIRED BY EXHAUST FAN MANUFACTURER MOUNTED HEIGHT = 1300mm ABOVE FINISH FLOOR LEVEL
3M	MOTOR RATED 3-SPEED SWITCH FOR CEILING FAN, 220V, 20AMP MOUNTED HEIGHT = 1300mm ABOVE FINISH FLOOR LEVEL
	RECESSED MOUNTED DUPLEX RECEPTACLES 1PH, 240V, 16A, 50HZ GROUNDING DIN TYPE. MOUNTING HEIGHT = 450mm ABOVE FINISH FLOOR LEVEL
GFI	RECESSED MOUNTED SINGLE RECEPTACLES 1PH, 240V, 16A, 50HZ GROUNDING DIN TYPE WITH GROUND FAULT INTERRUPTER AND SWITCH. MOUNTING HEIGHT =1300mm ABOVE FINISH FLOOR
CEE	RECESSED MOUNTED DUPLEX RECEPTACLES 3PH, 380V, 30A, 50HZ GROUNDING DIN TYPE MOUNTING HEIGHT =450mm ABOVE FINISH FLOOR
G	RECESSED MOUNTED DUPLEX RECEPTACLE LABEL INDICATE (HOSPITAL GRAD) 1PH, 240V, 16A, 50HZ GROUNDING DIN TYPE . MOUNTING HEIGHT =500mm ABOVE FINISH FLOOR INSULATED 4mm GROUNDING WIRE PER EACH RECEPTACLE
	SINGLE POWER SOCKET OUTLET, 220V, 50HZ, 20A MOUNTING HEIGHT = 450mm (U.O.N.)
PB	100mm x 100mm PULL BOX.
J	100mm x 100mm JUNCTION BOX
J CL	JUNCTION BOX FOR CEILING FAN WITH LIGHTS, SEE MECH STD. DETAILS
C.B	CIRCUIT BREAKER 30 AMP , 3 POLE , 380V , 50HZ
M	MOTORIZE DAMPER
REL	RELAY PANEL
M	MOTOR
H	HEATER
B XX-E-01	DETAIL DESIGNATION, TOP NUMBER INDICATE DETAIL NUMBER, BOTTOM LETTER INDICATES SHEET REF. NUMBER.

LIGHT FIXTURE NOTES:

1. ALL PENDANT MOUNTED FIXTURES ARE TO INCLUDE MANUFACTURERS "BALL-HANGER" TYPE CANOPY TO COMPENSATE FOR ROOF PITCH. FIELD CUT TO LENGTH.
2. ALL LIGHTING FIXTURES TO BE PROVIDED WITH "STANDARD" HIGH POWER FACTOR "ELECTRONIC" BALLASTS, UNLESS NOTED OTHERWISE.

LINE TYPE:

- - - - - - -	EXPOSED CONDUIT
————————	EMBEDDED OR CONCEALED CONDUIT
- - -|- - -	LIGHTNING PROTECTION CONDUCTOR

ABBREVIATIONS:

A	AMP
A.H.U.	AIR HANDLING UNIT
A/C	AIR CONDITIONING
A.C.U.	AIR CONDITION UNIT
A.F.F.	ABOVE FINNISH FLOOR LEVEL
C	CONDUIT
CB	CIRCUIT BREAKER
CHH	COMMUNICATION HANDHOLE
C.L.	CENTERLINE
C.O.E.	CORE OF ENGINEERS
CU	CONDENSING UNIT
ø, DIA	DIAMETER
EF	EXHAUST FAN
EHH	ELECTRICAL HANDHOLE
EMT	ELECTRIC METALLIC TUBING
EWH	ELECTRICAL WATER HEATER
FACP	FIRE ALARM CONTROL PANEL
GFI	GROUND FAULT INTERRUPTER
GRS	GALVANIZED RIGID STEEL
HZ	HERTZ
IR	IMPULSE RELAY
IL	INVERTED LEVEL
UTP	UNSHIELDED TWISTED PAIR
N.F.D.S	NON FUSED DISCONNECT SWITCH
L.C.	LIGHTING CONTACTOR
L.F.	LIGHT FIXTURE
LPI	LIGHTNING PROTECTION INSTITUTE
M	METER
MAX	MAXIMUM
MD	MOTORIZE DAMPER
MECH	MECHANICAL
MLO	MAIN LUGS ONLY
mm	MILLIMETER
P.A.C.U.	PACKAGE AIR CONDITION UNIT
PVC	POLYVINYL CHLORIDE
RM	ROOM
SF	SUPPLY FAN
S.U.	SPLIT UNIT
TRANS	TRANSFORMER
TTC	TELEPHONE TERMINAL CABINET
TYP	TYPICAL
TV	TELEVISION
U.O.N.	UNLESS OTHERWISE NOTED
V	VOLT
W	WATT
WP	WEATHER PROOF
WR	WELDING RECEPTACLE
RP	RECALCULATION PUMP

GENERAL NOTES:

1. MOUNTING HEIGHT OF SWITCHES 1.3M AFF UNLESS OTHERWISE NOTED.
2. MOUNT RECEPTACLES AND TELPHONE/DATA OUTLETS 450mm AFF UNLESS OTHERWISE NOTED. W=MOUNT 1.4M AFF.
3. MOUNT TELEPHONE TERMINAL CABINET (TTC) 1800mm FROM THE TOP OF CABINET TO FLOOR.
4. MOUNT ELECTRICAL PANELS 1800mm A.F.F. TO THE TOP OF THE PANEL.
5. TELEPHONE/DATA CABLE SHALL BE CAT 5E, 4 PAIRS
6. FOR EXACT LOCATION OF MECHANICAL EQUIPMENT REFER TO MECHANICAL DESIGN DRAWINGS.
7. EQUIPMENT SHALL BE RATED FOR 40 DEGREES C AND 2000 METERS (ABOVE SEA LEVEL) ELEVATION
8. THE GROUNDING RESISTANCE SHALL BE NO HIGHER THAN 25 OHMS , EXCEPT IN THE UPS AND EQUIPMENT ROOM SHALL BE 5 OHMS MEASURED MIN OF 48 HRS AFTER RAINFALL, ADDITIONAL RODS SHOULD BE USED TO ACHIEAVED THE REQUIRED RESISTANCE
9. ALL LIGHT FIXTURES SHALL BE SEISMICALLY BRACED.
10. ALL PANEL BOARD AIC RATINGS AS SHOWN ON SCHEDULES.
11. THE ELECTRICAL WIRING SHOWN ON PLAN DRAWINGS IS DIAGRAMMATIC AND INTENDED TO IDENTIFY THE CIRCUIT ARRANGEMENT FOR EACH AREA. THE CONDUIT CAN BE COMBINED FOR DIFFERENT CIRCUITS, PROVIDED THE INSTALLATION MEETS THE NEC, WITH NO MORE THAN 3 CONNECTIVE CIRCUITS IN ANY CONDUIT, SUCH AS 1, 3, 5 OR 2, 4, 6, ETC. THE 3 CIRCUITS CAN SHARE ONE NEUTRAL CONDUCTOR.

UNLESS OTHERWISE NOTED, LINEAR DIMENSIONS SHOWN ARE IN MILLIMETERS.

SYMBOL	DESCRIPTION	DATE	APP

Designed By:
Drawn By:
Checked By:
Date: 10 MAY 2007
File No. AF0707
I.S.O. Sheet File Name: AF0707CE-EL010N.dwg
Solicitation Number: -

US Army Corps of Engineers Transatlantic Programs Center

ANA REGIONAL BRIGADE
PAKTIKA, AFGHANISTAN
EMBEDDED TRAINING FACILITY
DFAC 2
ELECTRICAL
LEGEND AND NOTES

SHEET REFERENCE NUMBER:
CE-GE-01

$DATE$
$FILE$

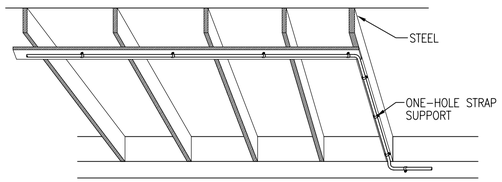

1 SURFACE MOUNTED CONDUIT SUPPORT

SCALE: N.T.S

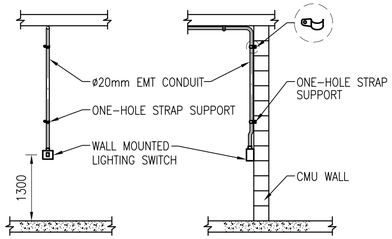

NOTE:-
WALL MOUNTED LIGHTING OUTLETS SHOULD BE CENTRAL ON A BLOCK, NOT BETWEEN TWO BLOCKS.

2 GENERAL INSTALLATION DETAIL FOR LIGHTING SWITCH (CONDUIT EXPOSED)

SCALE: N.T.S

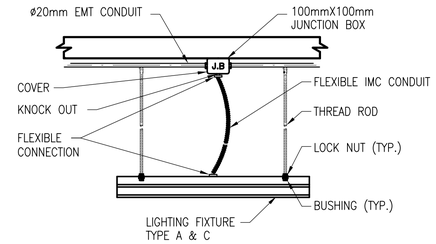

3 PENDANT LIGHT FIXTURE DETAIL (NOT USED)

SCALE: N.T.S

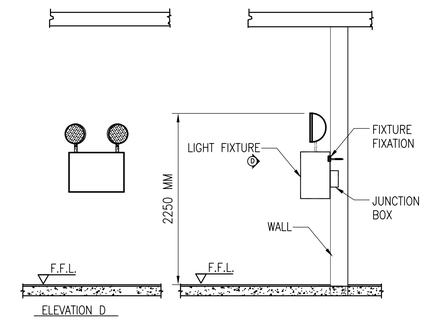

4 SURFACE EMERGENCY LIGHT FIXTURE DETAIL

SCALE: N.T.S

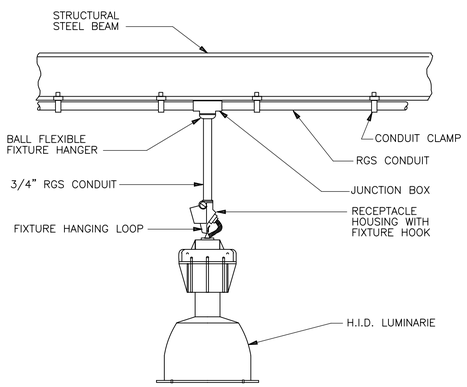

5 H.I.D. LUMINARIE PENDANT MOUNTED

SCALE: N.T.S

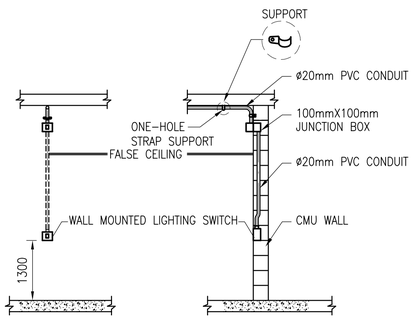

6 GENERAL INSTALLATION DETAIL FOR LIGHT SWITCH (CONDUIT CONCEALED)

SCALE: N.T.S

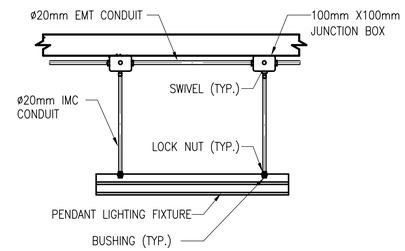

7 INSTALLATION OF LIGHTING FIXTURE IN SEISMIC BUILDING

SCALE: N.T.S

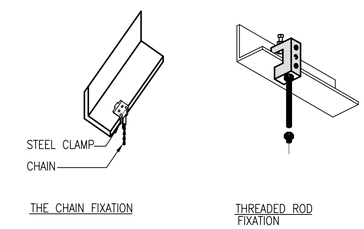

8 GENERAL SUPPORT DETAIL

SCALE: N.T.S

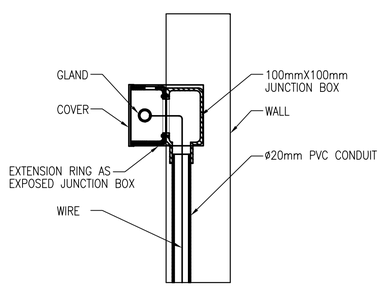

9 CONVERTING FROM EXPOSED TO EMBEDDED ROUTING IN WALL

SCALE: N.T.S

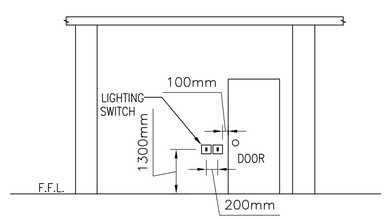

NOTE:-
THE LOCATION OF THE CONDUIT FEEDING THE FIRST SWITCH TO BE 100mm FROM THE DOOR OPENING

10 LIGHT SWITCH MOUNTING

SCALE: N.T.S

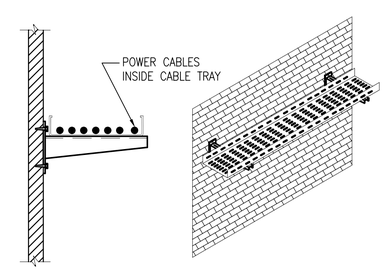

11 GENERAL INSTALLATION DETAIL FOR WALL MOUNTED CABLE TRAY

SCALE: N.T.S

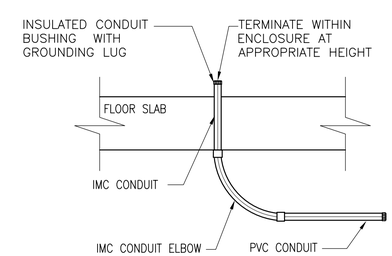

12 TYPICAL CONDUIT STUB-UP THROUGH FLOOR SLAB FOR FEEDING EQUIPMENT

SCALE: N.T.S

UNLESS OTHERWISE NOTED, LINEAR DIMENSIONS SHOWN ARE IN MILLIMETERS.

SYMBOL	DESCRIPTION	DATE	APP

Designed By:
Drawn By:
Checked By:
Date: 10 MAY 2007
File No. AF0707
I.S.O. Sheet File Name: AF0707CE-EL01D1.dwg
Solicitation Number: -

US Army Corps of Engineers Transatlantic Programs Center

ANA REGIONAL BRIGADE
PAKTIKA, AFGHANISTAN
EMBEDDED TRAINING FACILITY
DFAC 2
ELECTRICAL DETAILS

SHEET REFERENCE NUMBER:
CE-DE-01

$DATE$
$FILE$

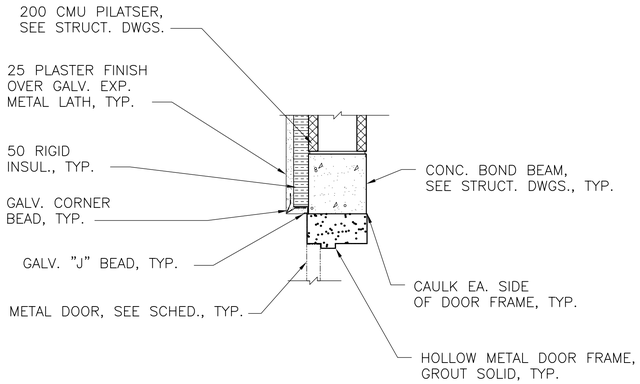

1 DETAIL - EXTERIOR DOOR HEAD

CE-A-01 REF. SCALE: 1:10

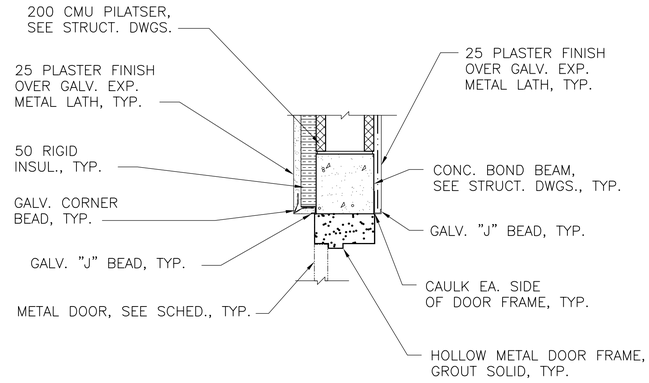

4 DETAIL - EXTERIOR DOOR HEAD

CE-A-01 REF. SCALE: 1:10

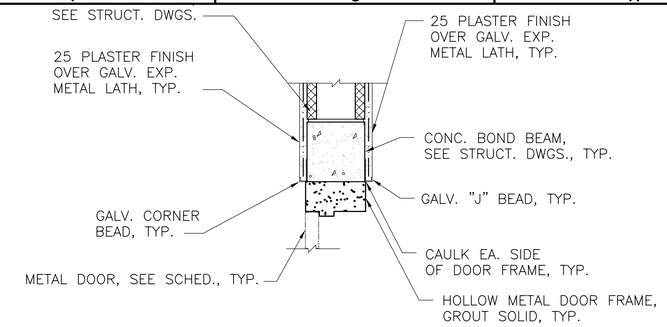

7 DETAIL - INTERIOR DOOR HEAD

CE-A-01 REF. SCALE: 1:10

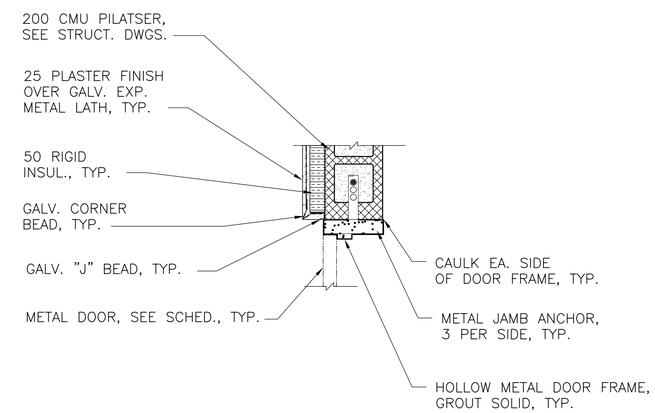

2 DETAIL - EXTERIOR DOOR JAMB

CE-A-01 REF. SCALE: 1:10

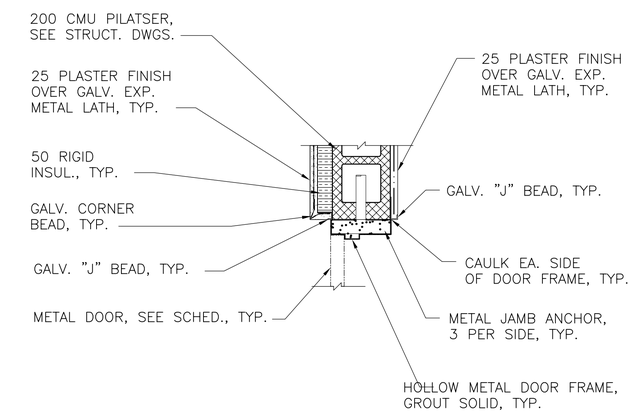

5 DETAIL - EXTERIOR DOOR JAMB

CE-A-01 REF. SCALE: 1:10

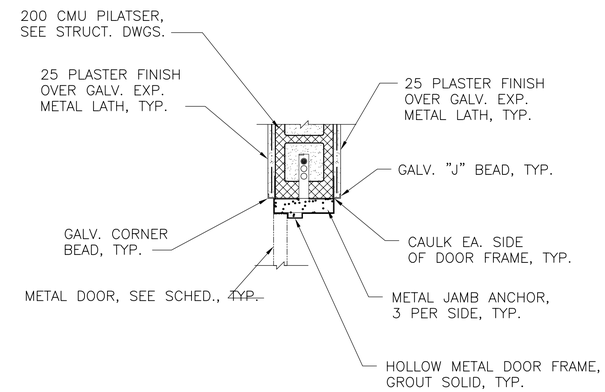

8 DETAIL - INTERIOR DOOR JAMB

CE-A-01 REF. SCALE: 1:10

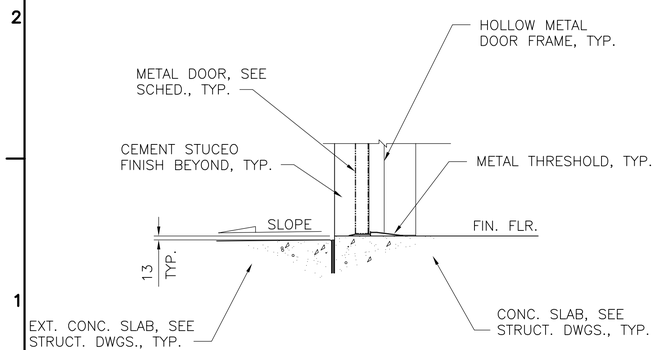

3 DETAIL - EXTERIOR DOOR SILL

CE-A-01 REF. SCALE: 1:10

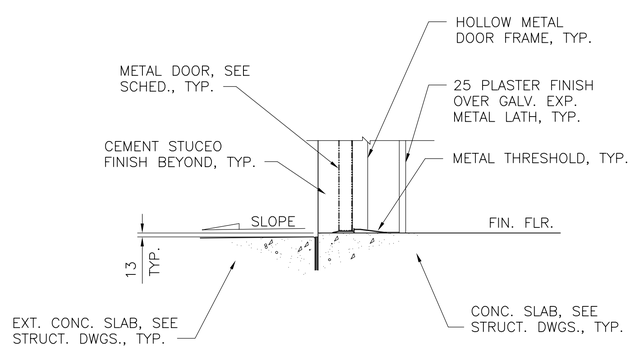

6 DETAIL - EXTERIOR DOOR SILL

CE-A-01 REF. SCALE: 1:10

GRAPHIC SCALE:

200 0 200mm

SCALE: 1 = 10

UNLESS OTHERWISE NOTED, LINEAR DIMENSIONS SHOWN ARE IN MILLIMETERS.

SYMBOL	DESCRIPTION	DATE	APR

Designed By: R. BROWN
Date: 10 MAY 2007
Drawn By: D. GRIFFIN
File No. AF0707
Checked By: R. BROWN
I.S.O. Sheet File Name: AF0707CE-AR16DT.dwg
B. THOMAS
Solicitation Number: –

US Army Corps of Engineers Transatlantic Programs Center

ANA REGIONAL BRIGADE
PAKTIKA, AFGHANISTAN
EMBEDDED TRAINING FACILITY
DFAC 2

DOOR & WINDOW DETAILS

SHEET REFERENCE NUMBER:
CE-A-16

$DATE$
$FILE$

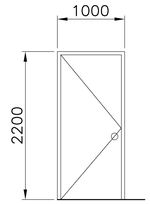

1 DOOR (D1)
SCALE: 1:40

1A DOOR (D1A) 20–MIN. FIRE RATED
SCALE: 1:40

1B DOOR (D1B) 45–MIN. FIRE RATED
SCALE: 1:40

1C DOOR (D1C) INSULATED
SCALE: 1:40

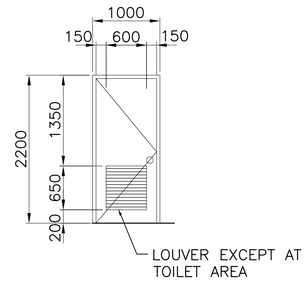

2 DOOR (D2)
SCALE: 1:40

2A DOOR (D2A) 20–MIN. FIRE RATED
SCALE: 1:40

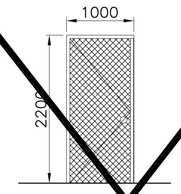

3 DOOR (D3)
SCALE: 1:40

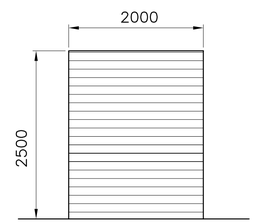

4 DOOR (D4)
SCALE: 1:40

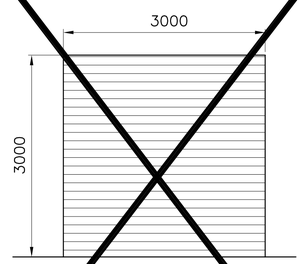

5 DOOR (D5)
SCALE: 1:40

5A DOOR (D5A)
SCALE: 1:40

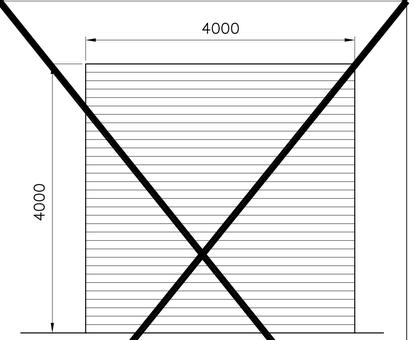

6 DOOR (D6)
SCALE: 1:40

6A DOOR (D6A)
SCALE: 1:40

DOOR SCHEDULE

DOOR NO.	DIMENSION WIDTH	DIMENSION HEIGHT	PANEL NUMBER	OPENING SYSTEM	HDWR. NO.	MATERIAL
D1	1000	2200	1	HINGED		HM DOOR IN HM FRAME
D1A	1000	2200	1	HINGED		HM DOOR IN HM FRAME; 20 MIN FIRE RATED
D1B	1000	2200	1	HINGED		HM DOOR IN HM FRAME; 45 MIN FIRE RATED
D1C	1000	2200	1	HINGED		HM DOOR IN HM FRAME; INSULATED
D2	3000	3000	1	HINGED		HM DOOR IN HM FRAME W/ LOUVER
D2A	3000	4000	1	HINGED		HM DOOR IN HM FRAME W/ FIRE DAMPER FUSIBLE LINK LOUVER 20 MIN FIRE RATED
D3	1000	2200	1	HINGED		WELDED WIRE MESH IN STEEL FRAME
D4	2000	2500	1	ROLL–UP		STEEL DOOR & FRAM, MANUALLY OPERATED, INSULATED
D5	3000	3000	1	ROLL–UP		STEEL DOOR & FRAM, MANUALLY OPERATED, INSULATED
D5A	3000	3000	1	ROLL–UP		STEEL DOOR & FRAM, MANUALLY OPERATED, UNINSULATED
D6	4000	4000	1	ROLL–UP		STEEL DOOR & FRAM, MANUALLY OPERATED, INSULATED
D6A	4000	4000	1	ROLL–UP		STEEL DOOR & FRAM, MANUALLY OPERATED, INSULATED
D7	1000	2200	1	HINGED		HM DOOR IN HM FRAME W/ LAMINATED GLAZING
D8	1000	2200	1	HINGED		HM DOOR IN HM FRAME; 90 MIN FIRE RATED. 6 MM WIRE GLASS
D9	1900	2200	2	HINGED		HM DOOR IN HM FRAME W/ LAMINATED GLAZING, INSULATED

WINDOW SCHEDULE

WINDOW NUMBER	DIMENSION WIDTH	DIMENSION HEIGHT	DIMENSION SILL HEIGHT	PANEL NUMBER	OPENING SYSTEM	DESCRIPTION
W1	1000	1000	1700	2	SLIDING	ALUM. PANELS W/TRANSPARENT 6MM GLASS METAL SILL AND FIXED INSECT METAL SCREEN
W4	900	1200	1000	1	FIXED	HM FRAME W/ 6MM LAMINATED GLASS

NOTES:

1. FOR HARDWARE SET DESCRIPTION SEE SPECIFICATIONS SECTION.
2. ITEMS BLOCKED OUT, OR LINED THROUGH, DO NOT APPLY TO THIS FACILITY.
3. ALL GLAZING SHALL BE LAMINATED EXCEPT WHERE NOTED OTHERWISE.

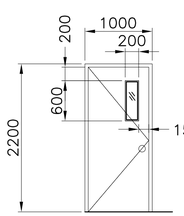

7 DOOR (D7)
SCALE: 1:40

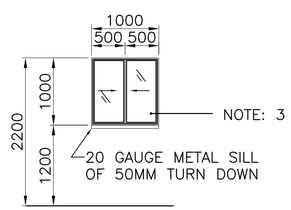

8 WINDOW (W1)
SCALE: 1:40

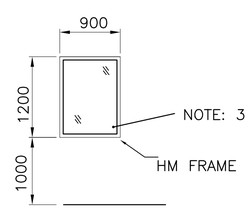

9 WINDOW (W4)
SCALE: 1:40

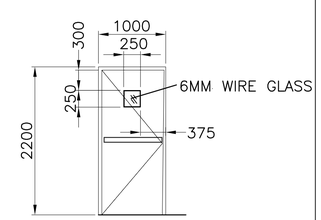

10 DOOR (D8) 90–MIN. FIRE RATED
SCALE: 1:40

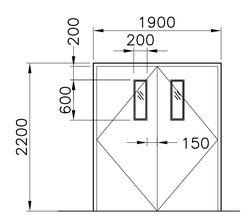

11 DOOR (D9)
SCALE: 1:40

GRAPHIC SCALE:
200 0 200mm
SCALE: 1 = 10

UNLESS OTHERWISE NOTED, LINEAR DIMENSIONS SHOWN ARE IN MILLIMETERS.

SYMBOL	DESCRIPTION	DATE	APR

Designed By: R. BROWN
Date: 10 MAY 2007
Drawn By: D. GRIFFIN
File No. AF0707
Checked By: R. BROWN
I.S.O. Sheet File Name: AF0707CE–AR15SC.dwg
B. THOMAS
Solicitation Number: –

US Army Corps of Engineers Transatlantic Programs Center

ANA REGIONAL BRIGADE
PAKTIKA, AFGHANISTAN
EMBEDDED TRAINING FACILITY
DFAC 2

DOOR & WINDOW SCHEDULE

SHEET REFERENCE NUMBER:
CE–A–15

$DATE$
$FILE$

FINISH SCHEDULE

ROOM NO.	ROOM NAME	FLOOR	CEILING	INTERIOR WALLS				REMARKS
				NORTH	EAST	SOUTH	WEST	
101	MECHANICAL	F2	C3	W3	W3	W3	W3	W/O PLASTER FINISH – INTERIOR ONLY.
102	ELECT	F2	C3	W3	W3	W3	W3	W/O PLASTER FINISH – INTERIOR ONLY.
103	COMM	F2	C3	W3	W3	W3	W3	W/O PLASTER FINISH – INTERIOR ONLY.
104	LOCKERS/TOILET	F3	C1	W1	W1	W1	W1	–
105	JANITOR	F3	C1	W2	W2	W2	W2	–
106	SERVING	F3	C1	W2	W2	W2	W2	
107	SERVING LINE	F1	C1	W1	W1	W1	W1	–
108	VESTIBULE	F1	C1	W1	W1	W1	W1	–
109	OFFICE	F1	C1	W1	W1	W1	W1	–
110	UNISEX TOILET	F1	C1	W1	W1	W1	W1	–
111	UNISEX TOILET	F1	C1	W1	W1	W1	W1	–
112	SEATING AREA	F1	C1	W1	W1	W1	W1	–
113	DRY STORAGE	F3	C1	W3	W3	W3	W3	W/O PLASTER FINISH – INTERIOR ONLY.
114	SCULLERY	F3	C1	W2	W2	W2	W2	–
115	FOOD PREP	F3	C1	W2	W2	W2	W2	–
116	KITCHEN	F3	C1	W2	W2	W2	W2	–
117	STORAGE & RECEIVING	F3	C1	W2	W2	W2	W2	–

FINISHING SCHEDULE LEGEND	
FLOOR	
F1	TERRAZO TILE
F2	SEALED CONCRETE
F3	QUARRY TILE
WALL	
W1	CMU W/ PAINTED PLASTER
W2	CERAMIC TILE
W3	PAINTED CMU
CEILING	
C1	PAINTED 19 MM PLASTER
C2	PAINTED EXPOSED PLYWOOD
C3	PAINTED EXPOSED CONRETE

GRAPHIC SCALE:

200 0 200mm
SCALE: 1 = 10

UNLESS OTHERWISE NOTED, LINEAR DIMENSIONS SHOWN ARE IN MILLIMETERS.

SYMBOL	DESCRIPTION	DATE	APR

Designed By: R. BROWN
Drawn By: D. GRIFFIN
Checked By: R. BROWN
B. THOMAS
Date: 10 MAY 2007
File No. AF0707
I.S.O. Sheet File Name: AF0707CE-AR14SC.dwg
Solicitation Number: –

US Army Corps of Engineers Transatlantic Programs Center

ANA REGIONAL BRIGADE
PAKTIKA, AFGHANISTAN
INTERPRETER FACILITIES
MWR

FINISH SCHEDULE

SHEET REFERENCE NUMBER:
CE–A–14

$DATE$
$FILE$

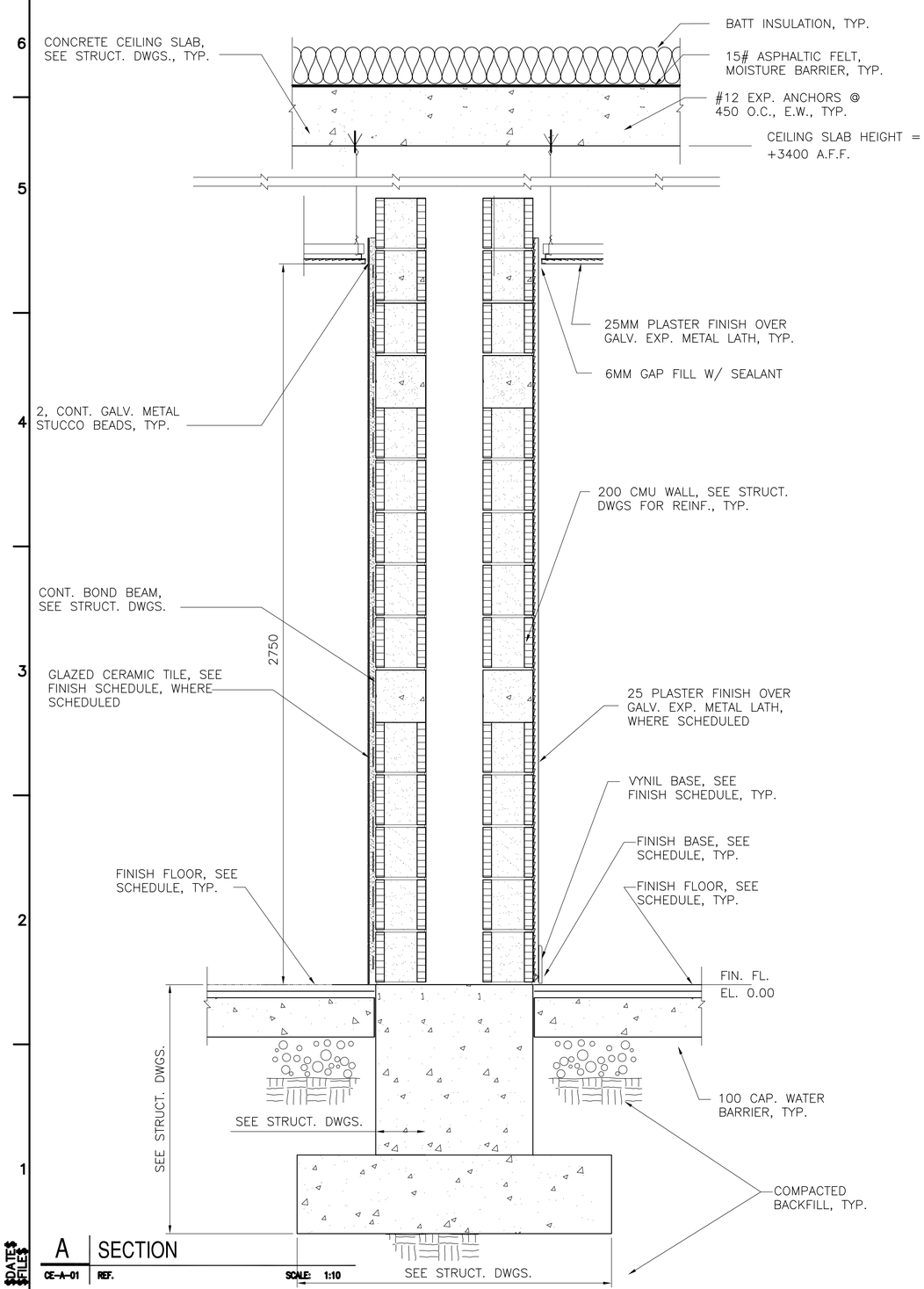

A | SECTION
CE-A-01 REF. SCALE: 1:10

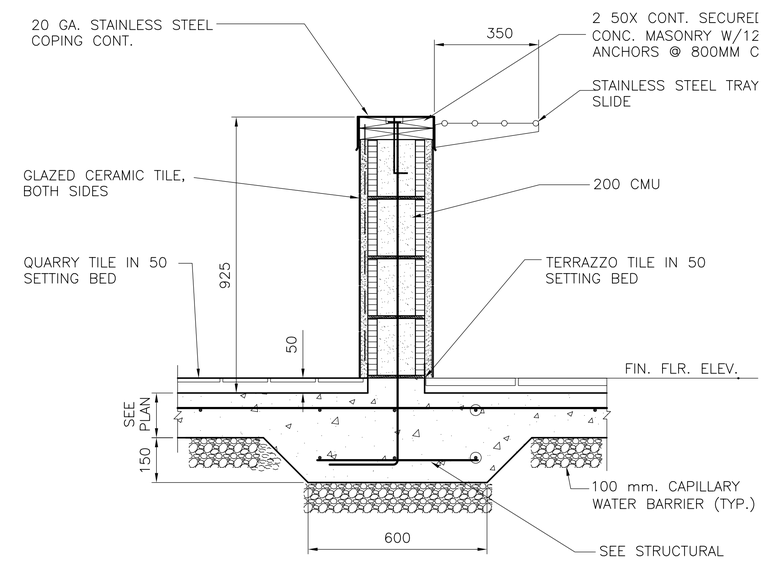

B | SECTION
CE-A-01 REF. SCALE: 1:10

GRAPHIC SCALE:

200 0 200mm
SCALE: 1 = 10

UNLESS OTHERWISE NOTED, LINEAR DIMENSIONS SHOWN ARE IN MILLIMETERS.

SYMBOL	DESCRIPTION	DATE	APP.

Designed By: R. BROWN
Drawn By: D. GRIFFIN
Checked By: R. BROWN
B. THOMAS

Date: 10 MAY 2007
File No. AF0707
I.S.O. Sheet File Name: AF0707CE-AR13SE.dwg
Solicitation Number: –

US Army Corps of Engineers Transatlantic Programs Center

ANA REGIONAL BRIGADE
PAKTIKA, AFGHANISTAN
EMBEDDED TRAINING FACILITY
DFAC 2

INTERIOR WALL SECTIONS

SHEET REFERENCE NUMBER:
CE–A–13

$DATE$
$FILE$

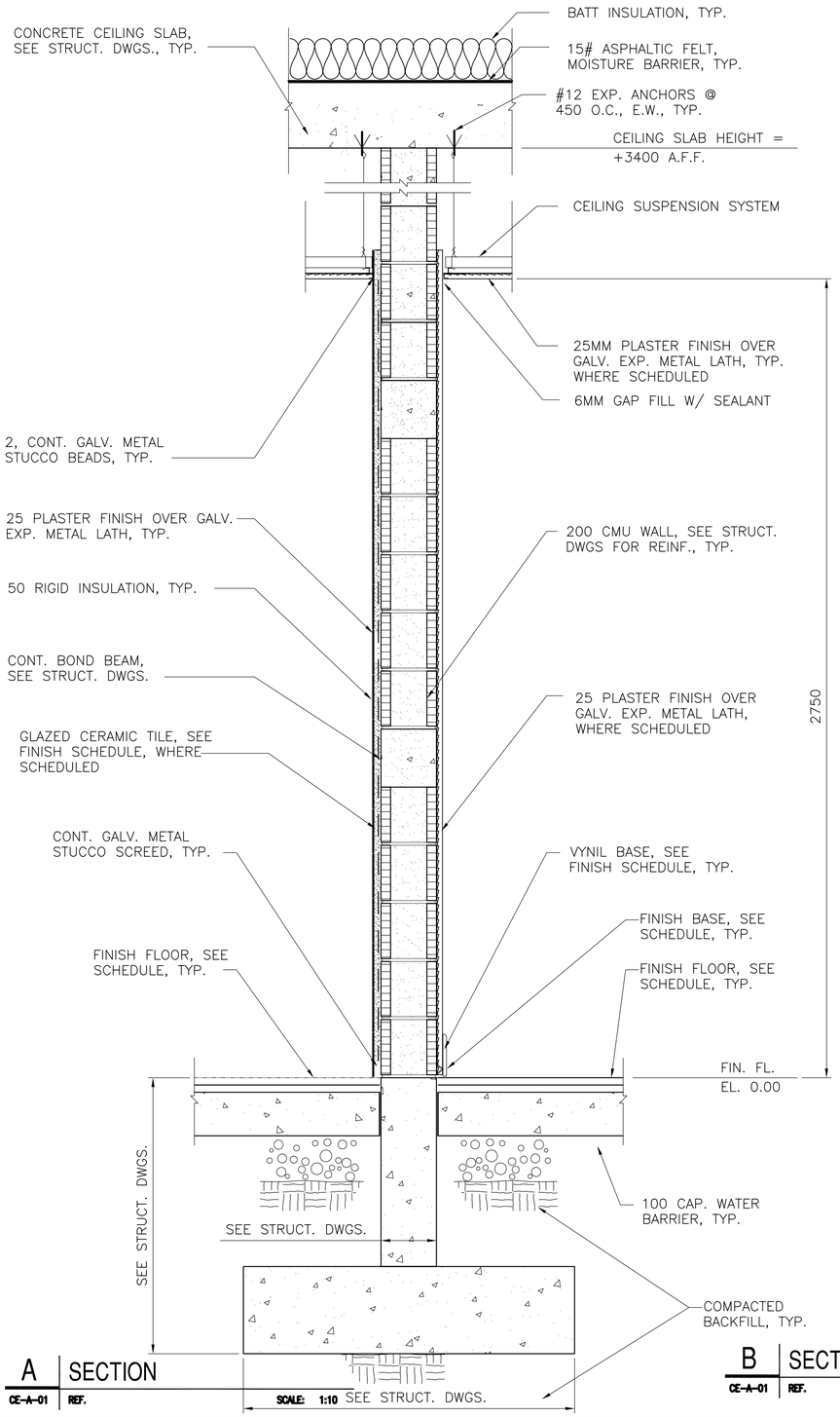

A SECTION
CE-A-01 REF. SCALE: 1:10

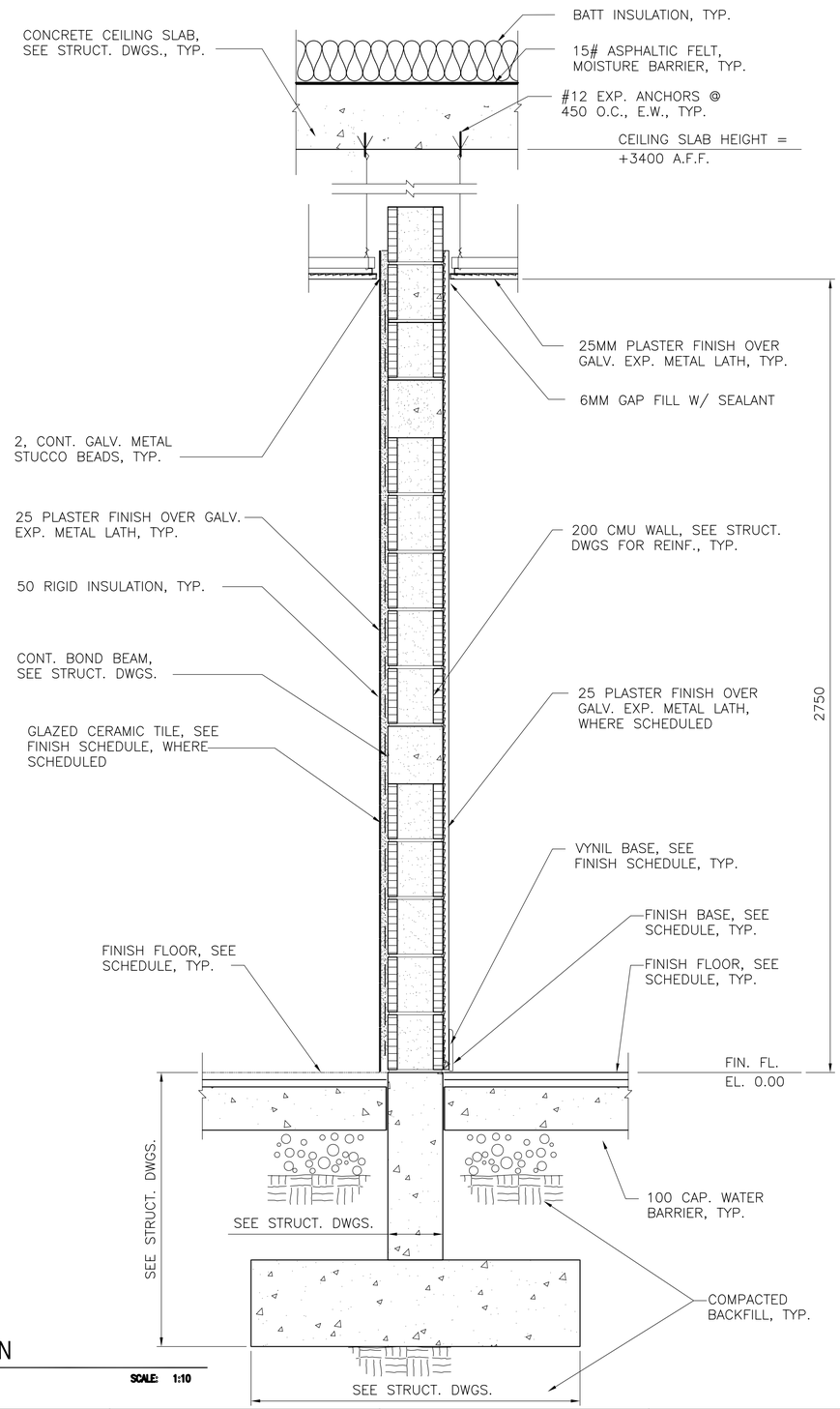

B SECTION
CE-A-01 REF. SCALE: 1:10

GRAPHIC SCALE:
200 0 200mm
SCALE: 1 = 10

UNLESS OTHERWISE NOTED, LINEAR DIMENSIONS SHOWN ARE IN MILLIMETERS.

SYMBOL	DESCRIPTION	DATE	APR

Date: 10 MAY 2007
File No. AF0707
I.S.O. Sheet File Name: AF0707CE-AR12SE.dwg
Solicitation Number: –
Designed By: R. BROWN
Drawn By: D. GRIFFIN
Checked By: R. BROWN
B. THOMAS

US Army Corps of Engineers
Transatlantic Programs Center

ANA REGIONAL BRIGADE
PAKTIKA, AFGHANISTAN
EMBEDDED TRAINING FACILITY
DFAC 2

INTERIOR WALL SECTIONS

SHEET REFERENCE NUMBER:
CE-A-12

$DATE$
$FILE$

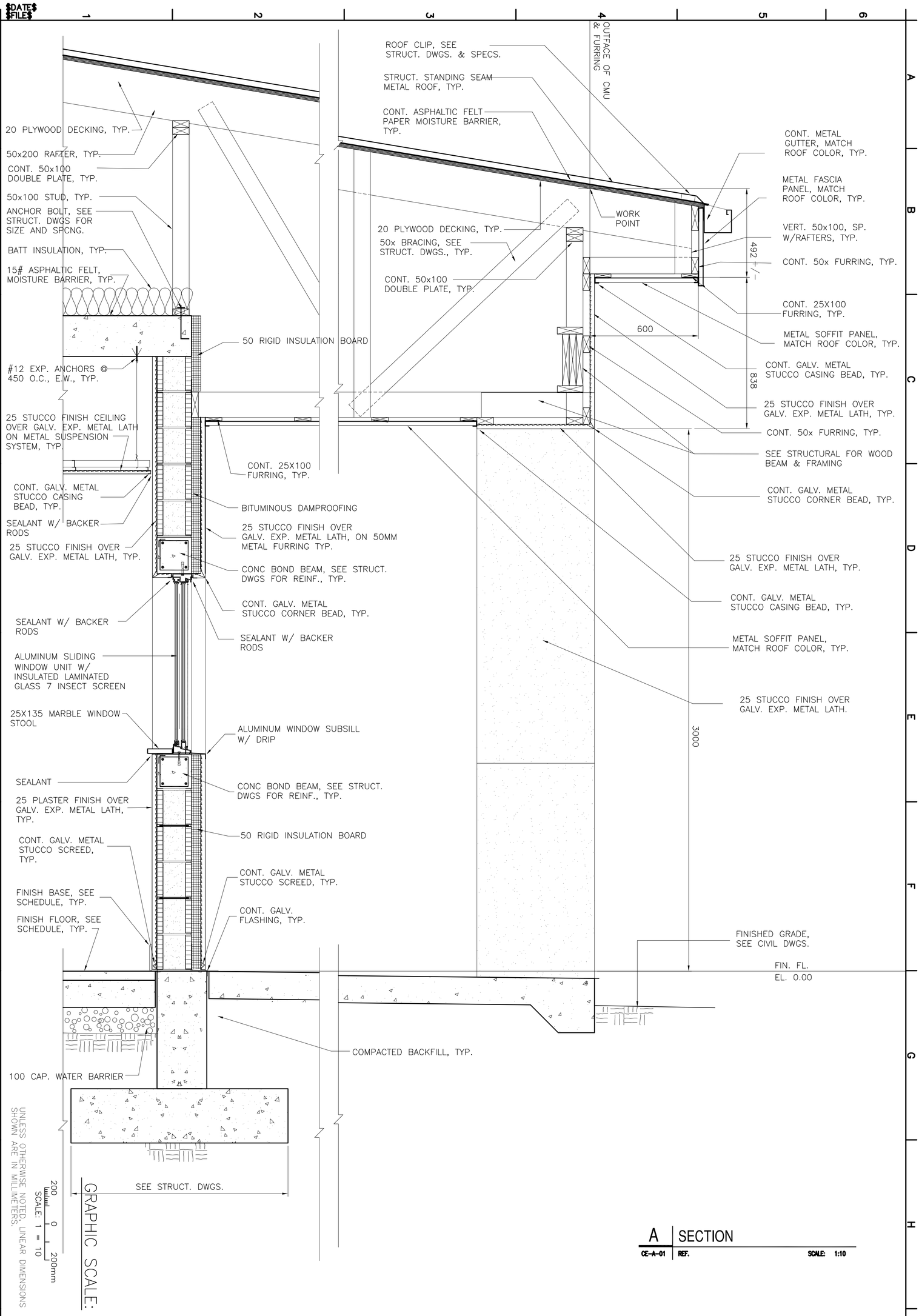

A SECTION

CE-A-01 REF. SCALE: 1:10

SHEET REFERENCE NUMBER: CE-A-11

ANA REGIONAL BRIGADE
PAKTIKA, AFGHANISTAN
EMBEDDED TRAINING FACILITY
DFAC 2

WALL SECTION

US Army Corps of Engineers
Transatlantic Programs Center

Designed By: R. BROWN	Date: 10 MAY 2007
Drawn By: D. GRIFFIN	File No. AF0707
Checked By: R. BROWN	I.S.O. Sheet File Name: AF0707CE-AR11SE.dwg
B. THOMAS	Solicitation Number: –

SYMBOL	DESCRIPTION	DATE	APR.

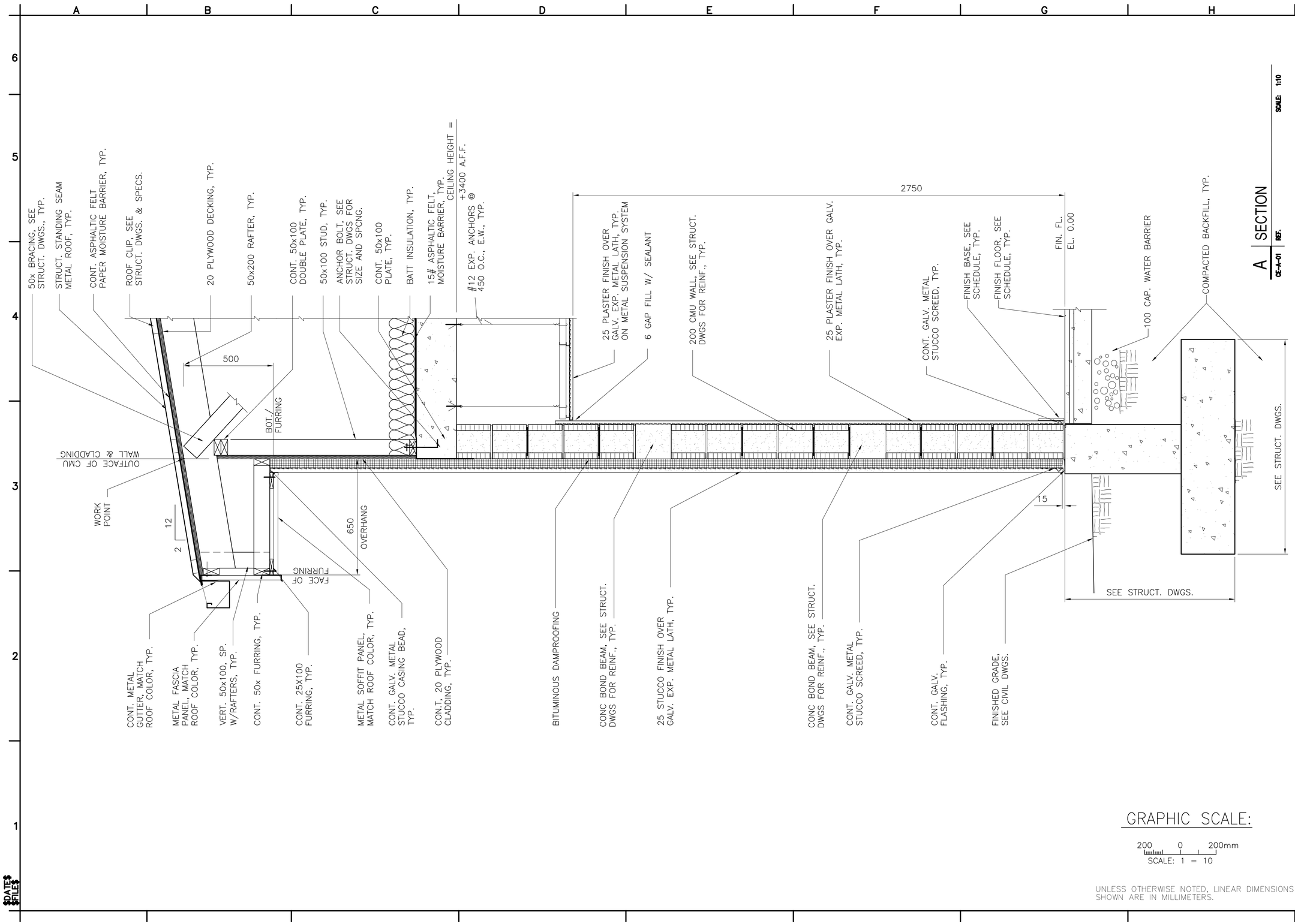

A SECTION
CE-A-01 REF.
SCALE: 1:10

SYMBOL	DESCRIPTION	DATE	APR

Designed By: R. BROWN
Drawn By: D. GRIFFIN
Checked By: R. BROWN
B. THOMAS

Date: 10 MAY 2007
File No. AF0707
I.S.O. Sheet File Name: AF0707CE-AR10SE.dwg
Solicitation Number: –

US Army Corps of Engineers Transatlantic Programs Center

ANA REGIONAL BRIGADE
PAKTIKA, AFGHANISTAN
EMBEDDED TRAINING FACILITY
DFAC 2

WALL SECTION

SHEET REFERENCE NUMBER:
CE–A–10

GRAPHIC SCALE:
200 0 200mm
SCALE: 1 = 10

UNLESS OTHERWISE NOTED, LINEAR DIMENSIONS SHOWN ARE IN MILLIMETERS.

$DATE$
$FILE$

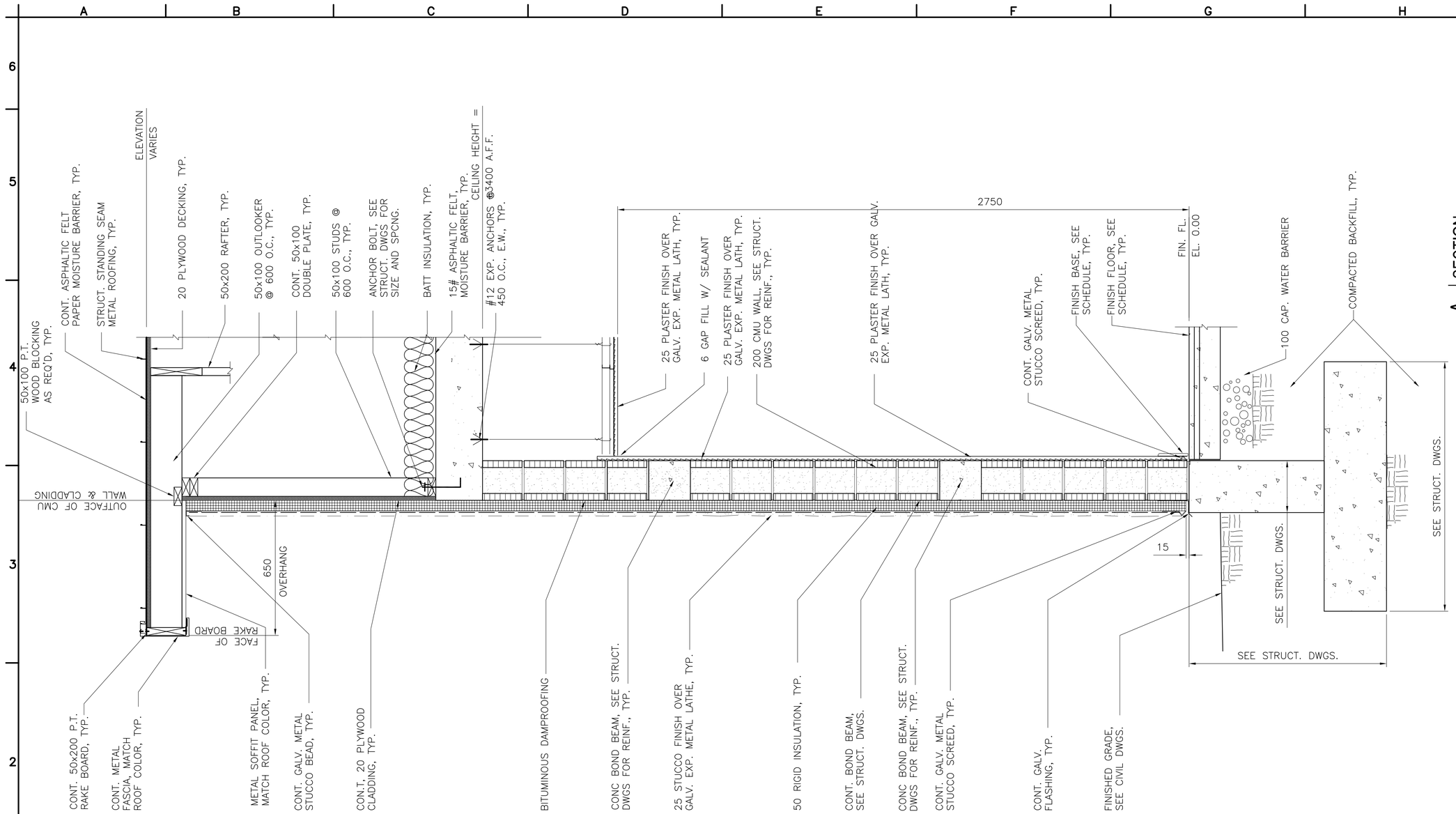

A SECTION
CE-A-01 REF.
SCALE: 1:10

SYMBOL	DESCRIPTION	DATE	APR

Designed By: R. BROWN
Drawn By: D. GRIFFIN
Checked By: R. BROWN
B. THOMAS
Date: 10 MAY 2007
File No. AF0707
I.S.O. Sheet File Name: AF0707CE-AR09SE.dwg
Solicitation Number: –

US Army Corps of Engineers Transatlantic Programs Center

ANA REGIONAL BRIGADE
PAKTIKA, AFGHANISTAN
EMBEDDED TRAINING FACILITY
DFAC 2

WALL SECTION

SHEET REFERENCE NUMBER:
CE–A–09

GRAPHIC SCALE:
200 0 200mm
SCALE: 1 = 10

UNLESS OTHERWISE NOTED, LINEAR DIMENSIONS SHOWN ARE IN MILLIMETERS.

$DATE$
$FILE$

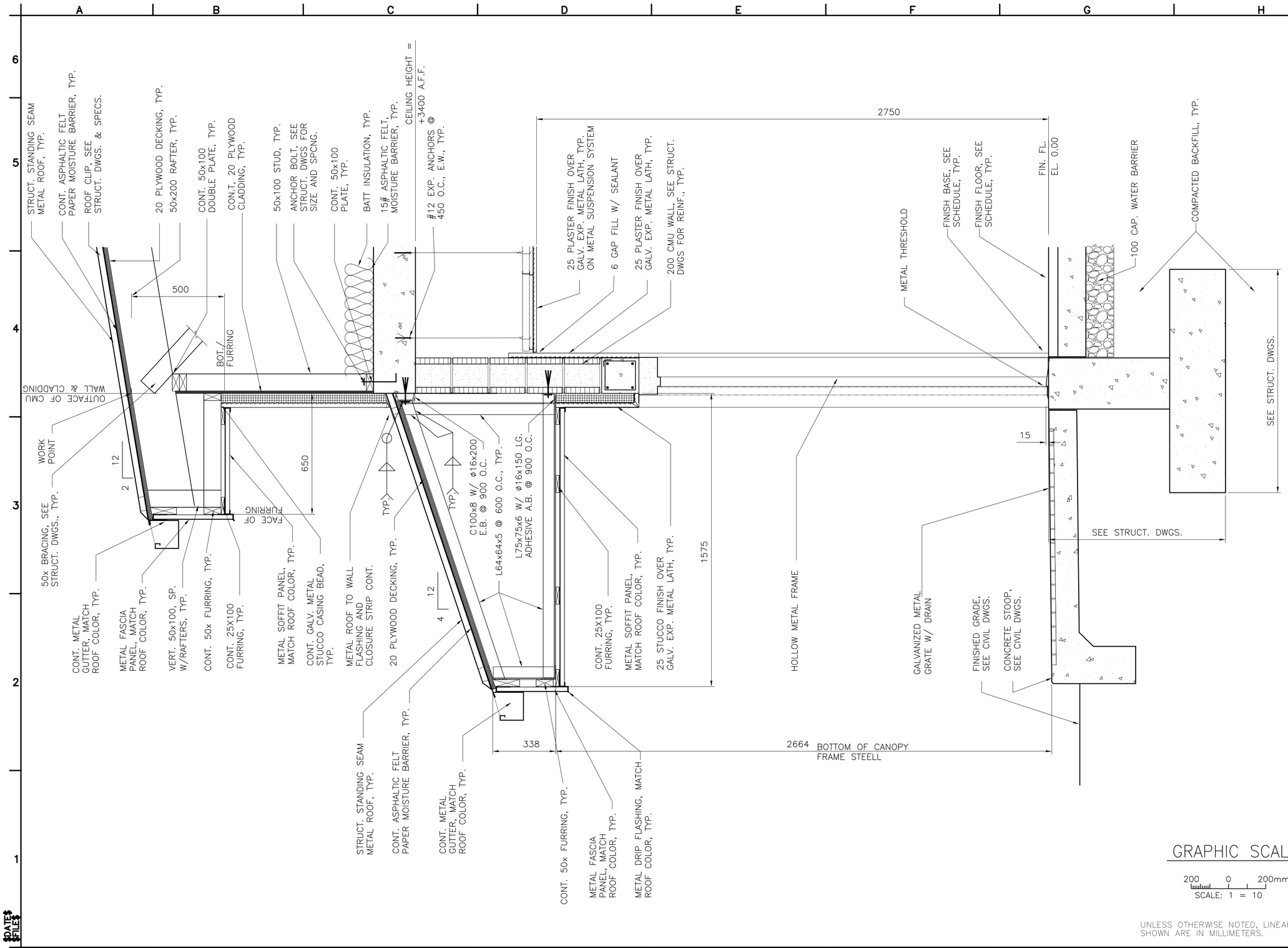

A SECTION
CE-A-01 REF.
SCALE: 1:10

SYMBOL	DESCRIPTION	DATE	APR

Designed By: R. BROWN
Date: 10 MAY 2007
Drawn By: D. GRIFFIN
File No. AF0707
Checked By: R. BROWN
I.S.O. Sheet File Name: AF0707CE-AR08SE.dwg
B. THOMAS
Solicitation Number: –

US Army Corps of Engineers Transatlantic Programs Center

ANA REGIONAL BRIGADE
PAKTIKA, AFGHANISTAN
EMBEDDED TRAINING FACILITY
DFAC 2

WALL SECTION

GRAPHIC SCALE:
200 0 200mm
SCALE: 1 = 10

UNLESS OTHERWISE NOTED, LINEAR DIMENSIONS SHOWN ARE IN MILLIMETERS.

SHEET REFERENCE NUMBER:
CE–A–08

$DATE$
$FILE$

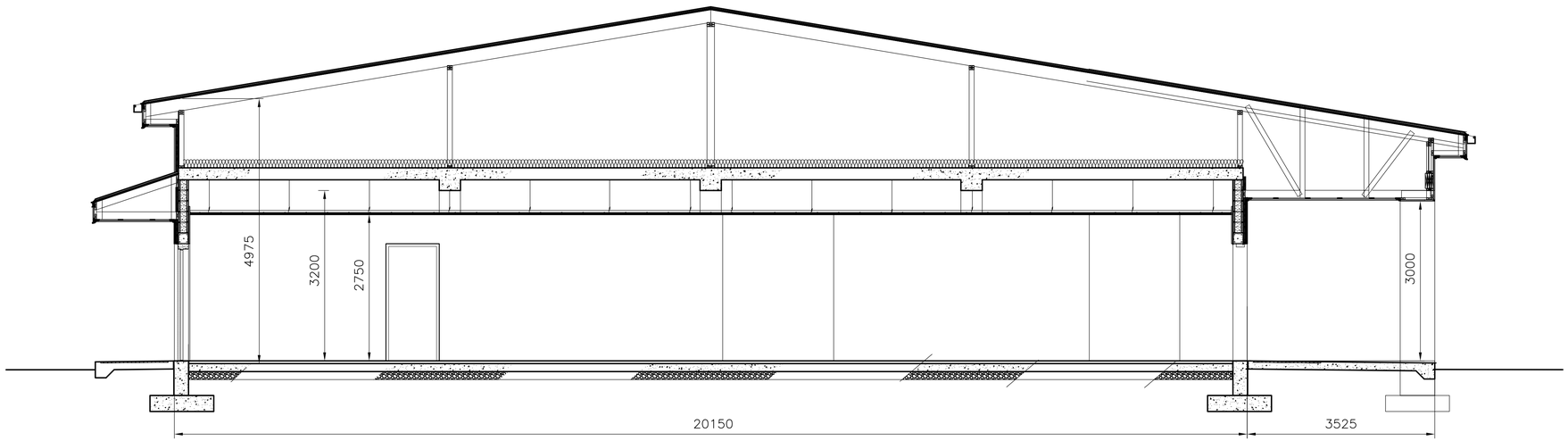

A SECTION

CE-A-01 REF. SCALE: 1:50

1000 0 1000mm
SCALE: 1 = 50

UNLESS OTHERWISE NOTED, LINEAR DIMENSIONS SHOWN ARE IN MILLIMETERS.

SYMBOL	DESCRIPTION	DATE	APP.

Designed By: C.V. KLING
Date: 10 MAY 2007
Drawn By: C.V. KLING
File No. AF0707
Checked By: B. R. THOMAS
I.S.O. Sheet File Name: AF0707CE-AR07SE.dwg
T. M. WHITESIDE
Solicitation Number: –

US Army Corps of Engineers Transatlantic Programs Center

ANA REGIONAL BRIGADE
PAKTIKA, AFGHANISTAN
EMBEDDED TRAINING FACILITY
DFAC 2

BUILDING SECTION

SHEET REFERENCE NUMBER:
CE–A–07

$DATE$
$FILE$

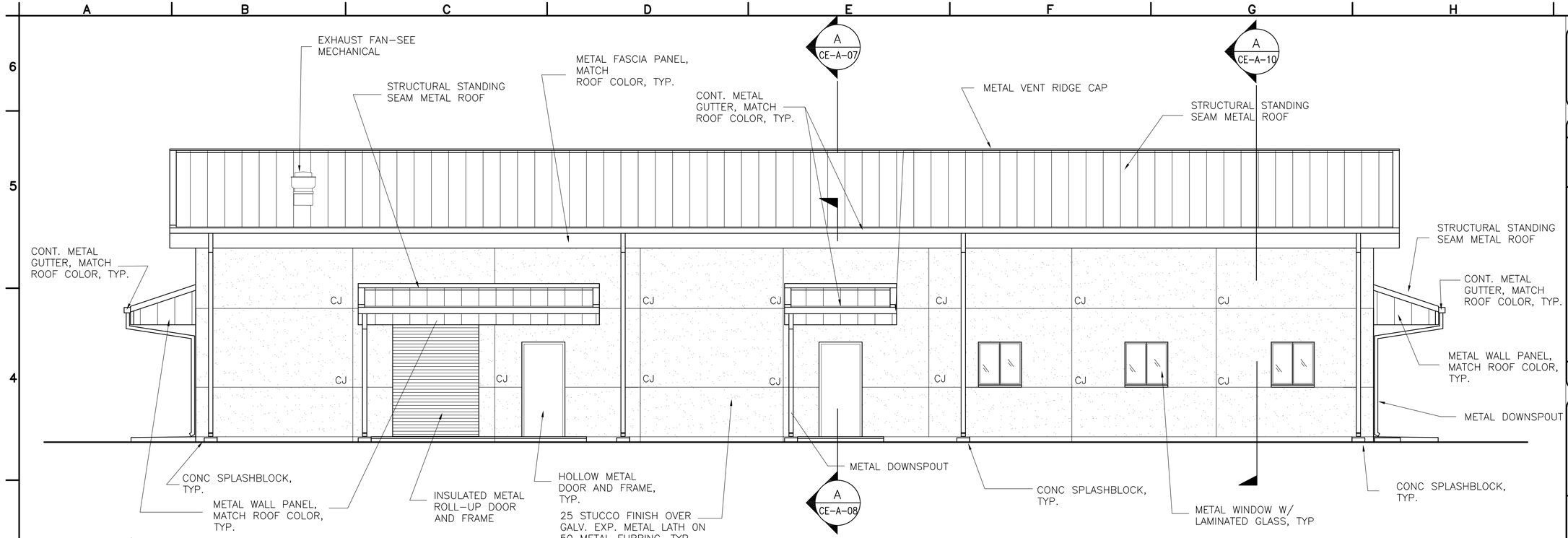

3 ELEVATION

CE-A-01 REF. SCALE: 1:50

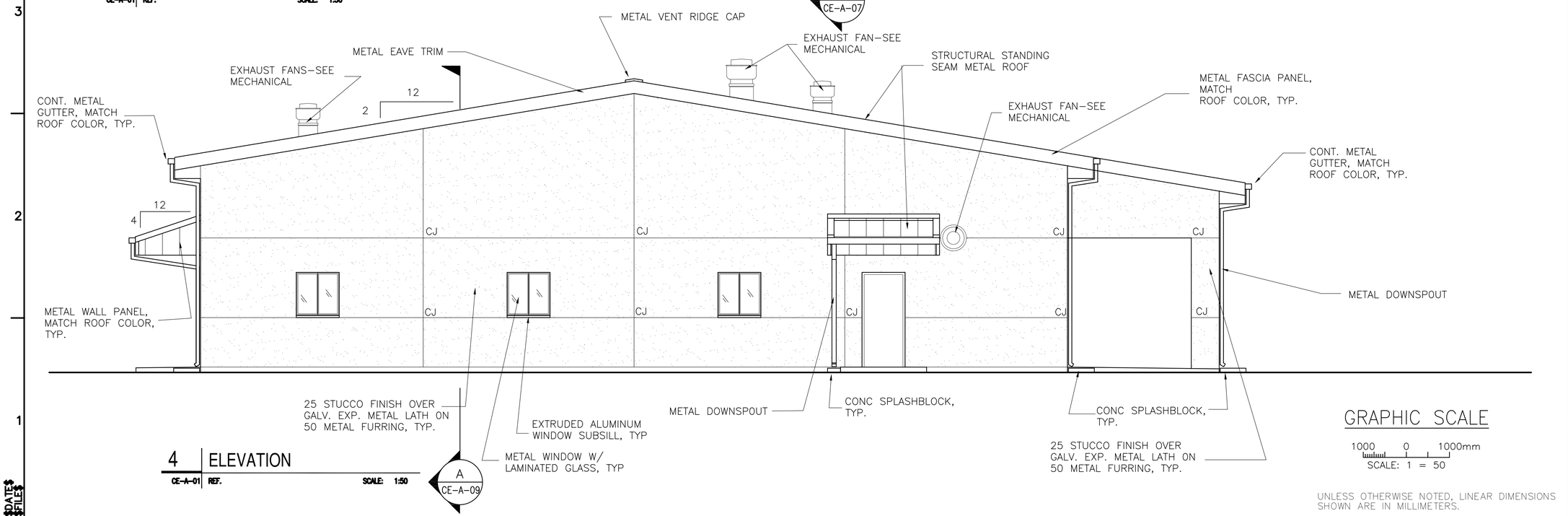

4 ELEVATION

CE-A-01 REF. SCALE: 1:50

GRAPHIC SCALE

1000 0 1000mm

SCALE: 1 = 50

UNLESS OTHERWISE NOTED, LINEAR DIMENSIONS SHOWN ARE IN MILLIMETERS.

SYMBOL	DESCRIPTION	DATE	APR

Date: 10 MAY 2007
File No. AF0707
I.S.O. Sheet File Name: AF0707CE–AR06EL.dwg
Solicitation Number: –

Designed By: C.V. KLING
Drawn By: C.V. KLING
Checked By: B. R. THOMAS
T. M. WHITESIDE

US Army Corps of Engineers Transatlantic Programs Center

ANA REGIONAL BRIGADE
PAKTIKA, AFGHANISTAN
EMBEDDED TRAINING FACILITY
DFAC 2

EXTERIOR ELEVATIONS

SHEET REFERENCE NUMBER:
CE–A–06

$DATE$
$FILE$

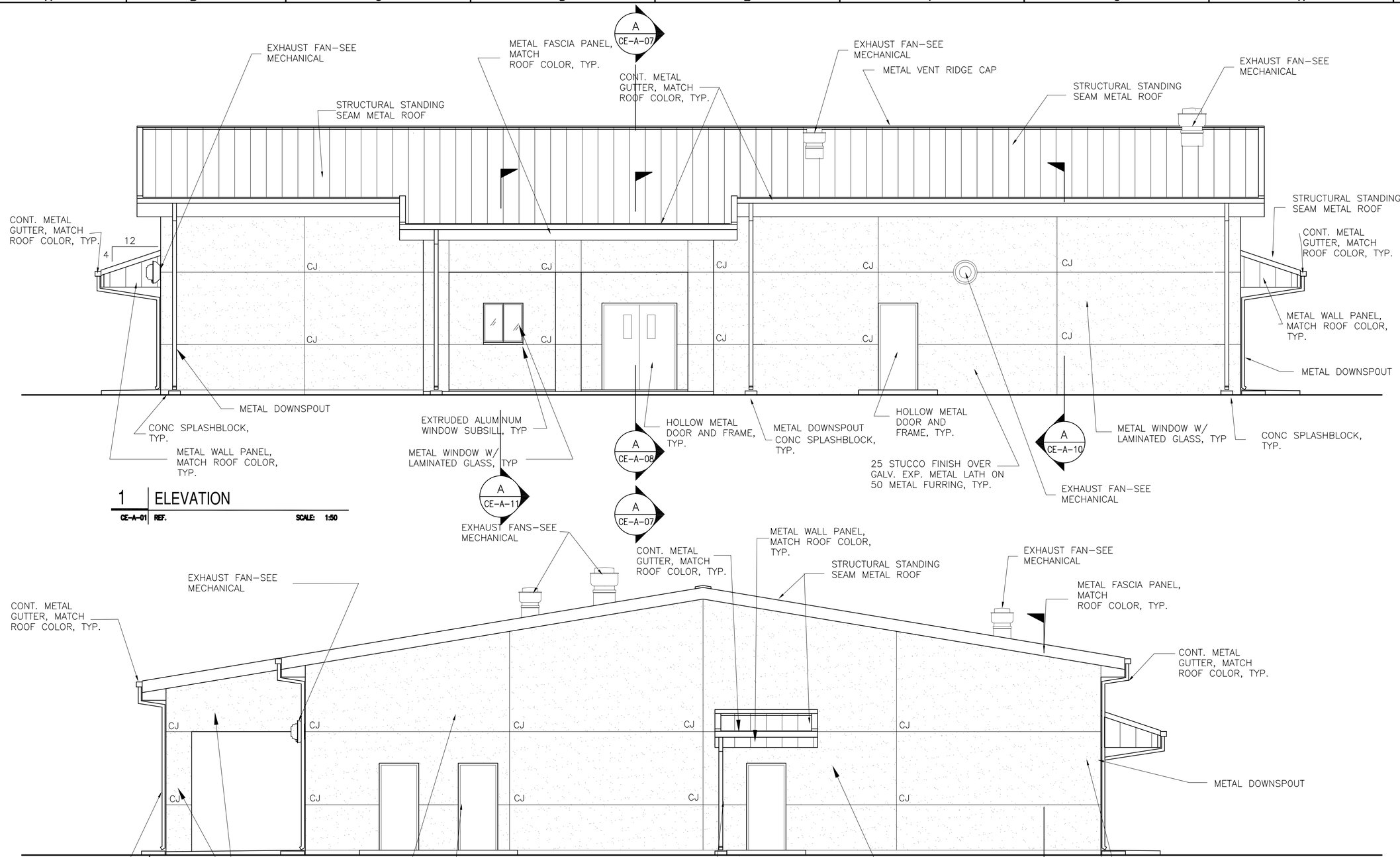

1 ELEVATION

CE–A–01 REF. SCALE: 1:50

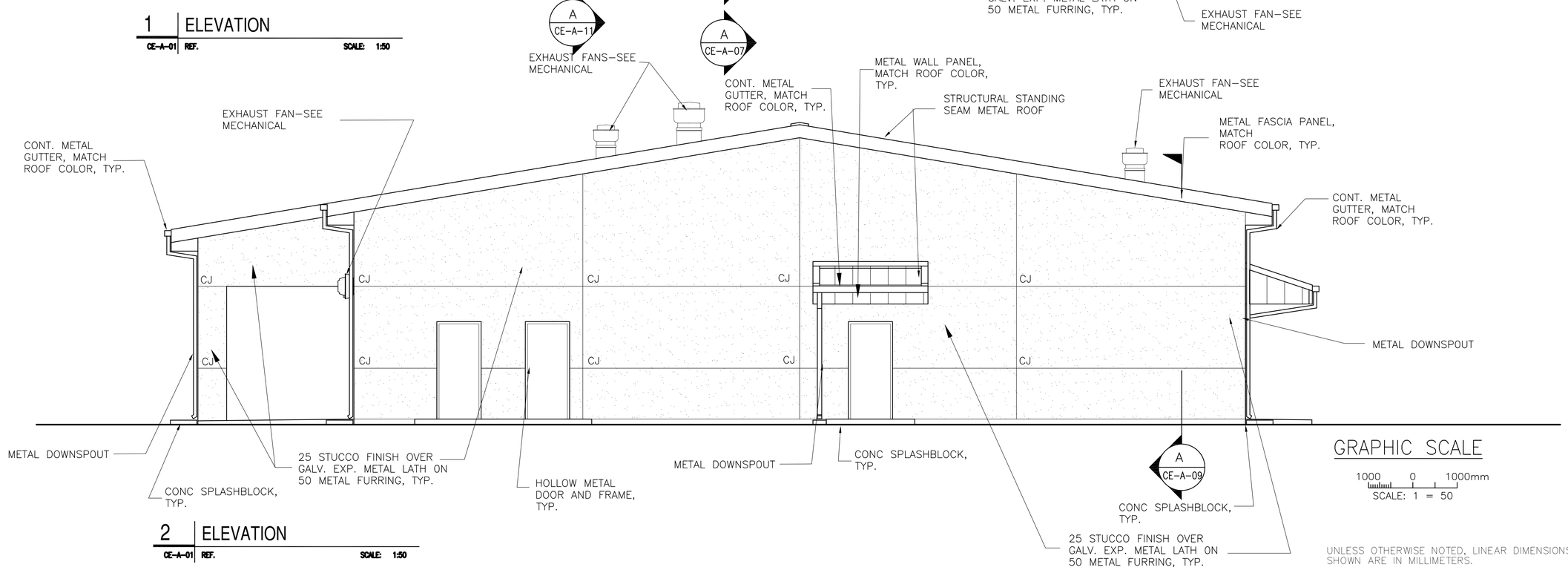

2 ELEVATION

CE–A–01 REF. SCALE: 1:50

GRAPHIC SCALE

1000 0 1000mm

SCALE: 1 = 50

UNLESS OTHERWISE NOTED, LINEAR DIMENSIONS SHOWN ARE IN MILLIMETERS.

SYMBOL	DESCRIPTION	DATE	APR

Date: 10 MAY 2007

File No. AF0707

I.S.O. Sheet File Name: AF0707CE–AR05EL.dwg

Solicitation Number: –

Designed By: C.V. KLING

Drawn By: C.V. KLING

Checked By: B.R. THOMAS

C.V. KLING

US Army Corps of Engineers Transatlantic Programs Center

ANA REGIONAL BRIGADE
PAKTIKA, AFGHANISTAN
EMBEDDED TRAINING FACILITY
DFAC 2

EXTERIOR ELEVATIONS

SHEET REFERENCE NUMBER:

CE–A–05

$DATE$
$FILE$

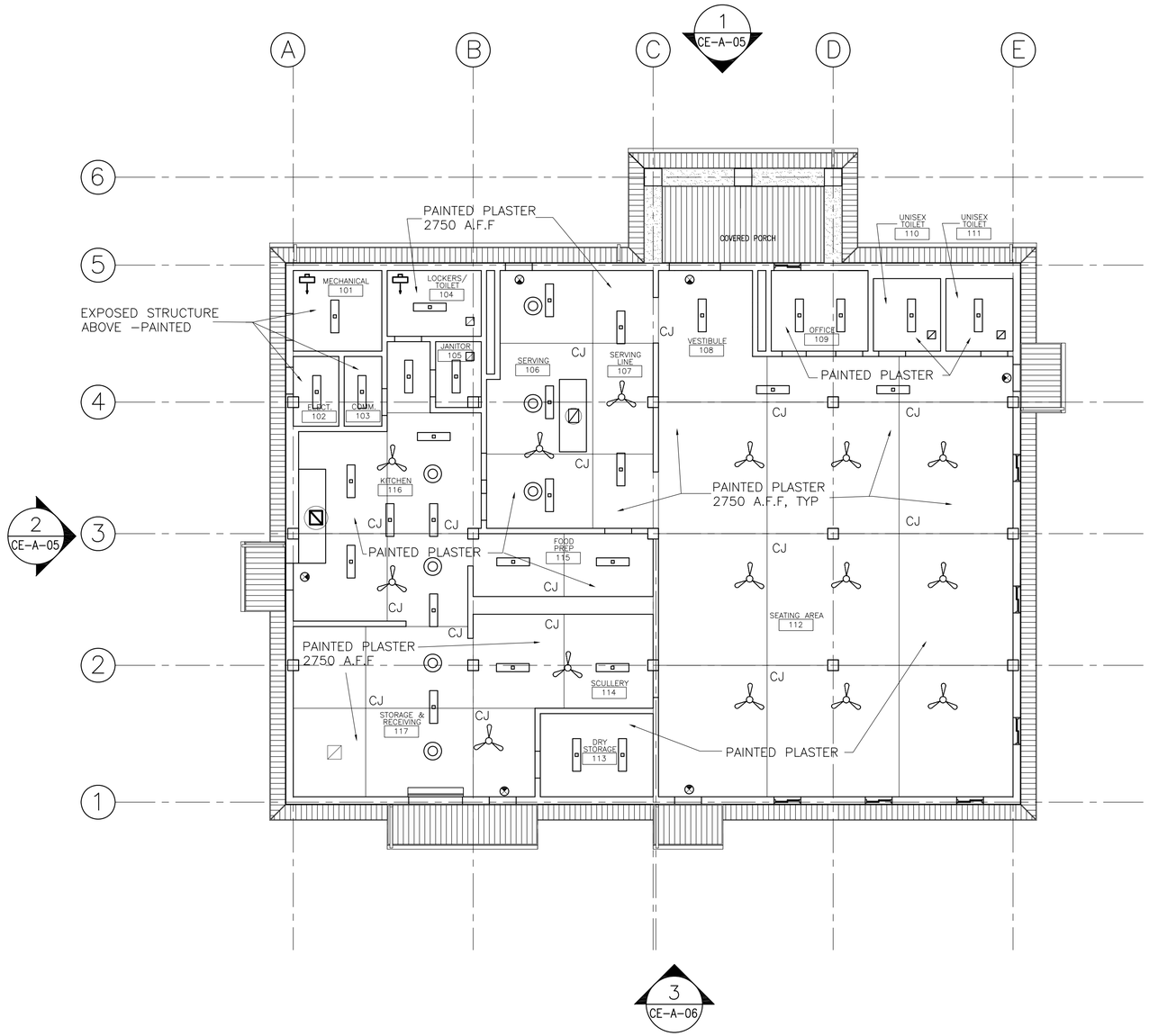

DFAC 2 – ROOF PLAN

SCALE: 1:100

EXHAUST AIR GRILLE

EXIT LIGHT

HVAC SUPPLY DIFFUSER

FLUORESCENT LIGHT FIXTURE

KITCHEN EXHAUST HOOD

CEILING FAN W/ LIGHT FIXTURE

STUCCO FINISH SURFACE

METAL SOFFIT PANELS

CJ PLASTER CONTROL JOINT

GRAPHIC SCALE

2000 0 2000mm

SCALE: 1 = 100

UNLESS OTHERWISE NOTED, LINEAR DIMENSIONS SHOWN ARE IN MILLIMETERS.

SYMBOL	DESCRIPTION	DATE	APP.

Designed By: C. KLING
Drawn By: C. KLING
Checked By: R. BROWN
Date: 10 MAY 2007
File No. AF0707
I.S.O. Sheet File Name: AF0707CE-AR04PN.dwg
Solicitation Number: –
B. THOMAS

US Army Corps of Engineers Transatlantic Programs Center

ANA REGIONAL BRIGADE
PAKTIKA, AFGHANISTAN
EMBEDDED TRAINING FACILITY
DFAC 2
REFLECTED CEILING PLAN –

SHEET REFERENCE NUMBER:
CE–A–04

$DATE$
$FILE$

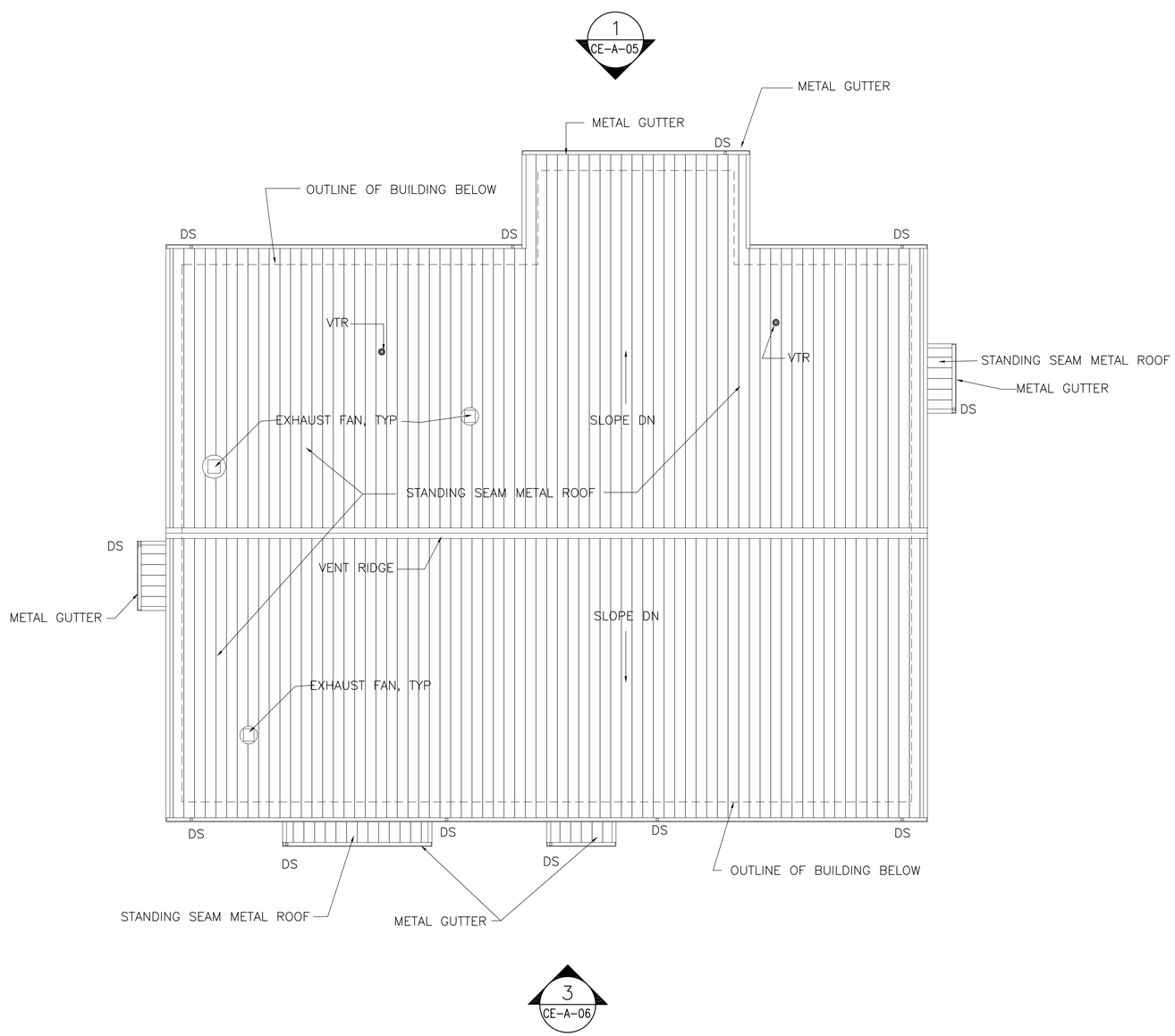

DFAC 2 – ROOF PLAN

SCALE: 1:100

GRAPHIC SCALE

2000 0 2000mm

SCALE: 1 = 100

UNLESS OTHERWISE NOTED, LINEAR DIMENSIONS SHOWN ARE IN MILLIMETERS.

SYMBOL	DESCRIPTION	DATE	APP.

Designed By: C. KLING
Drawn By: C. KLING
Checked By: R. BROWN
B. THOMAS

Date: 10 MAY 2007
File No. AF0707
I.S.O. Sheet File Name: AF0707CE-AR03PN.dwg
Solicitation Number: –

US Army Corps of Engineers
Transatlantic Programs Center

ANA REGIONAL BRIGADE
PAKTIKA, AFGHANISTAN
EMBEDDED TRAINING FACILITY
DFAC 2

ROOF PLAN

SHEET REFERENCE NUMBER:
CE–A–03

$DATE$
$FILE$

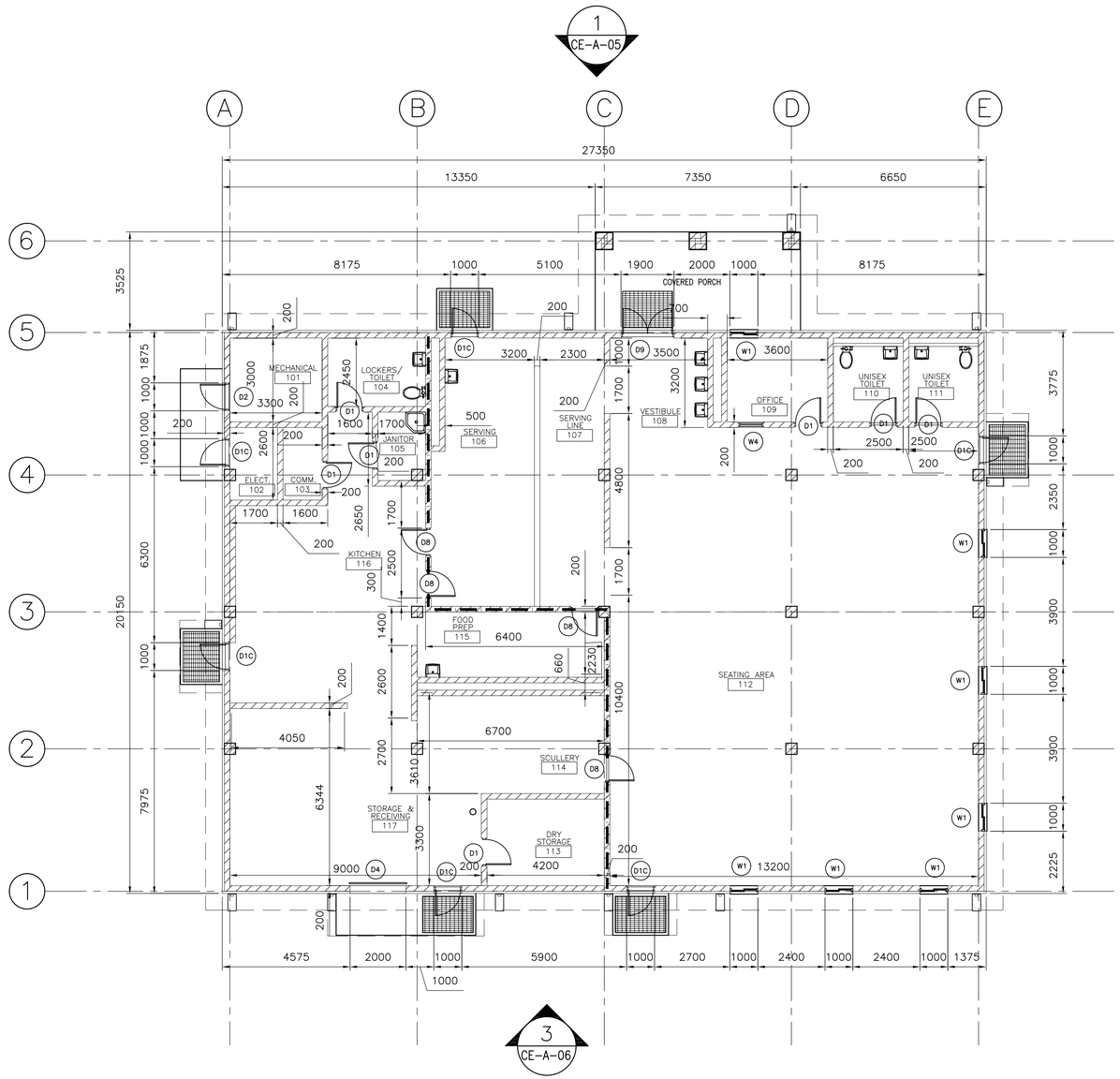

2-HOUR FIRE WALL

DFAC 2 – DIMENSIONAL FLOOR PLAN

SCALE: 1:100

GRAPHIC SCALE

2000 0 2000mm

SCALE: 1 = 100

UNLESS OTHERWISE NOTED, LINEAR DIMENSIONS SHOWN ARE IN MILLIMETERS.

SYMBOL	DESCRIPTION	DATE	APP.

Designed By: C. KLING
Drawn By: C. KLING
Checked By: R. BROWN
Date: 10 MAY 2007
File No. AF0707
I.S.O. Sheet File Name: AF0707CE-AR02PN.dwg
Solicitation Number: –
B. THOMAS

US Army Corps of Engineers Transatlantic Programs Center

ANA REGIONAL BRIGADE
PAKTIKA, AFGHANISTAN
EMBEDDED TRAINING FACILITY
DFAC 2
DIMENSIONAL FLOOR PLAN

SHEET REFERENCE NUMBER:
CE–A–02

$DATE$
$FILE$

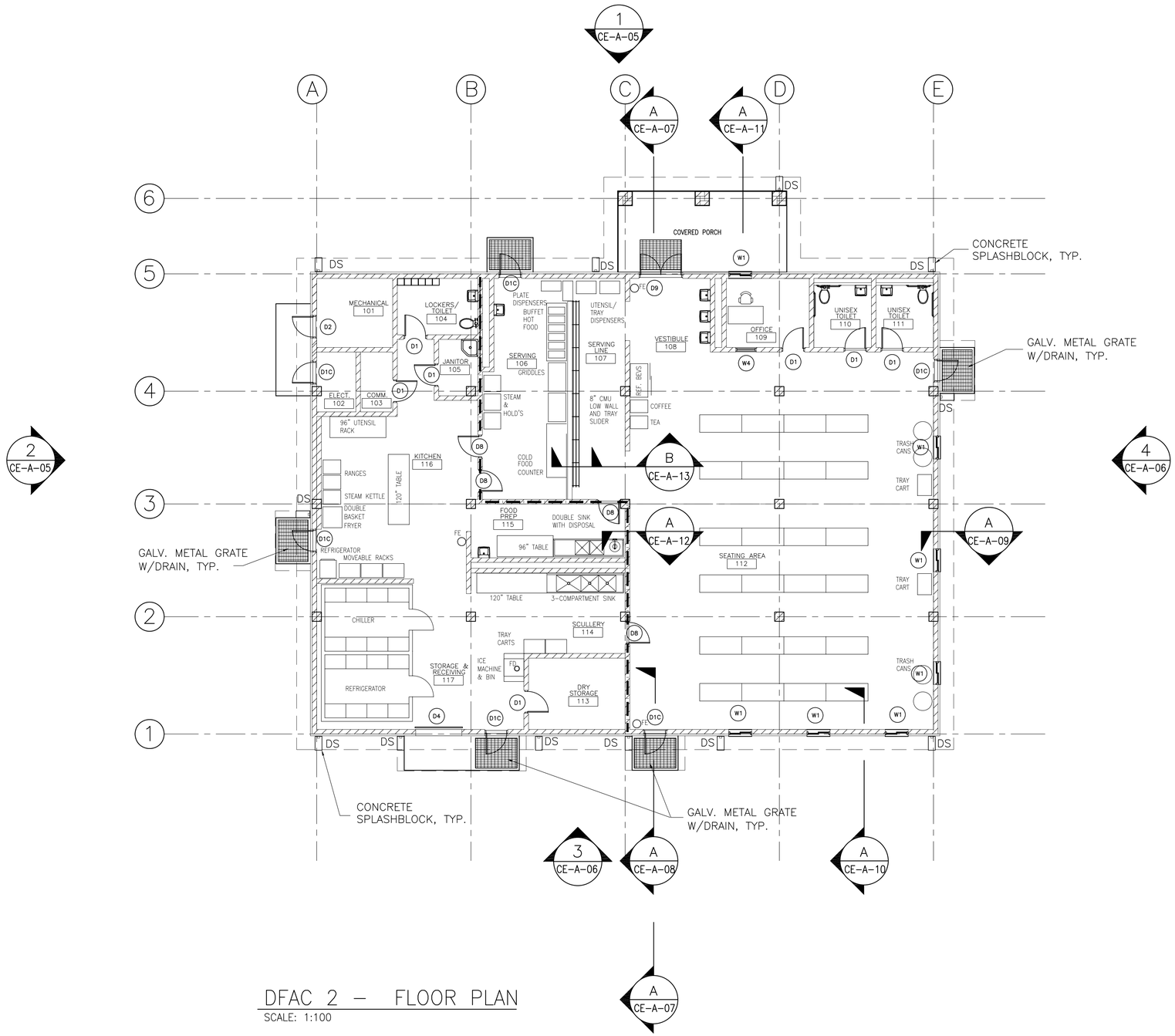

DFAC 2 – FLOOR PLAN

SCALE: 1:100

NOTES:

1– ALL WALLS ARE 200MM THK. CMU UNLESS NOTED OTHERWISE.

2– ALL WALLS TERMINATE AT CEILING UNLESS NOTED OTHERWISE. REF. STRUCT. DRWGS.

3– ALL DOOR JAMBS ARE 200MM UNLESS OTHERWISE NOTED.

4– ALL DIMENSIONS ARE TO FACE OF CMU UNLESS NOTED OTHERWISE.

5– ALL VERTICAL DIMENSIONS & LEVELS ARE FROM GROUND FLOOR FINISHED SLAB. THIS ELEVATION IS +0000.

6– SEE SHEET CE–A–02 FOR DIMENSIONS.

7– SEE STRUCTURAL DRAWINGS FOR LOCATION OF BUILDING CONTROL, EXPANSION AND SEISMIC JOINTS.

8– ALL HVAC OPENINGS DIMENSION SHALL BE VERIFIED WITH APPROVED SUBMITTALS.

9– ALL EXPOSED PURLINS, COLUMNS, FRAMES, AND GIRTS SHALL BE PAINTED.

10– TOTAL AREA OF BUILDING IS 570.00 M2.

CMU WALL

2–HOUR FIRE WALL

GRAPHIC SCALE

2000 0 2000mm

SCALE: 1 = 100

UNLESS OTHERWISE NOTED, LINEAR DIMENSIONS SHOWN ARE IN MILLIMETERS.

SYMBOL	DESCRIPTION	DATE	APR

Designed By: C. KLING
Drawn By: C. KLING
Checked By: R. BROWN
B. THOMAS

Date: 10 MAY 2007
File No. AF0707
I.S.O. Sheet File Name: AF0707CE–AR01PN.dwg
Solicitation Number: –

US Army Corps of Engineers Transatlantic Programs Center

ANA REGIONAL BRIGADE
PAKTIKA, AFGHANISTAN
EMBEDDED TRAINING FACILITY
DFAC 2

FLOOR PLAN –

SHEET REFERENCE NUMBER:
CE–A–01

$DATE$
$FILE$

ARCHITECTURAL ABBREVIATIONS

A	
ABOVE FINISH FLOOR	AFF
ACCESS PANEL	AP
ACOUSTIC	ACOUS (ACST)
ACTIVE LEAF	A/L
AGGREGATE	AGG
AIR CONDITIONING	A/C
ALUMINUM	ALUM (AL)
ANCHOR BOLT	AB
AND	&
ANGLE	∠ (ANG)
ARCHITECTURAL	ARCH
AREA INLET	AI.
ASPHALT	ASPH
AT	@
AUTOMATIC	AUTO
B	
BACK OF WALL	BOW
BATTEN INSULATION	BATT INSUL
BEAM	BM
BEARING	BRG
BITUMINOUS	BIT (BITUM)
BLOCK	BLK
BLOCKING	BLKG
BOARD	BD
BOTTOM	BOT (BOTT)
BRACING	BRCG
BRACKET	BRKT
BUILDING	BLDG
C	
CABINET	CAB
CAST IRON	CI
CATCH BASIN	CB
CEILING	CLG
CEMENT	CEM
CENTER	CTR
CENTER LINE	℄ OR CL
CENTER TO CENTER	CC
CERAMIC TILE	CT
CIRCULAR	CIR
CLEANOUT	CO
CLEAR	CLR
CLOSET	CLO
COLUMN	COL
CONCRETE	CONC
CONCRETE MASONRY UNITS	CMU
CONNECTION	CONN
CONSTRUCTION	CONSTR
CONSTRUCTION JOINT	CONSTR JT
CONTINUOUS	CONT.
CONTROL JOINT	CJ
CORNER	COR
CORRIDOR	CORR
COUNTER	CNTR
COUNTER SUNK	CSK
D	
DAMPPROOFING	DP
DETAIL	DET (DETL)
DIAGONAL	DIAG
DIAMETER	DIA
DIMENSION	DIM
DISPENSER	DISP
DOOR	DR
DOUBLE	DBL
DOWN	DN
DRAWER	DWR
DRAWING	DWG
DRINKING FOUNTAIN	DF
E	
EACH	EA
ELECTRICAL OR ELECTRIC	ELEC
ELEVATION	EL.
EMERGENCY	EMERG
ENCLOSURE	ENCL
ENTRANCE	ENTR
EQUIPMENT	EQUIP (EQPT)
EQUAL	EQ
EXHAUST	EXH
EXISTING	EXIST.
EXPANSION	EXPN
EXPANSION JOINT	EJ (EXP JT)
EXTERIOR	EXT
F	
FACE OF CONCRETE	FOC
FACE OF FINISH	FOF
FACE OF MASONRY	FOM
FACE OF WALL	FOW
FINISH	FIN.
FIRE HYDRANT	FH
FIXTURE	FIX
FLASHING	FLASH
FLOOR	FLR OR FL
FLOOR DRAIN	FD
FLOORING	FLG
FOOTING	FTG
FOUNDATION	FDN
FRAME	FR
FINISH FLOOR LINE	FFL
FIRE EXTINGUISHER	FE
G	
GAGE OR GAUGE	GA
GALVANIZED	GALV
GALVANIZED IRON	GI
GAS	G
GRID LINE	GL
GLAZED WALL TILE	GWT
GRADE	GR
GROUND	GND
GROUND CLEANOUT	GCO
GYPSUM	GYP
GYPSUM WALLBOARD	GYP BD (GWB)
H	
HANDRAIL	HDR
HARDBOARD	HBD
HARDWARE	HDW (HW)
HEAD	HD
HEATER	HTR
HEIGHT	HT (HGT)
HIGH POINT	H.PT.
HOLLOW METAL	HM
HORIZONTAL	HORIZ
HOSE BIBB	HB
I	
INSIDE DIAMETER	I.D.
INSULATION	INSUL.
INTERIOR	INT (INTR)
J	
JANITOR	JAN
JOINT	JT
JOIST	JST
K	
KEY LOCK	KL
KICK PLATE	KP
L	
LABORATORY	LAB
LAMINATE	LAM
LAVATORY	LAV
LIGHT	LT
LIGHTING	LTG
LOW POINT	LP
LUMBER	LBR
LOUVER	LVR
M	
MACHINE	MACH
MAINTENANCE	MAINT
MASONRY OPENING	MO
MASONRY UNIT	MU
MASTIC	MSTC
MATERIAL	MATL
MAXIMUM	MAX
MECHANICAL	MECH
METAL	MET
METAL BUILDING MANUFACTURER	MBM
MINIMUM	MIN
MIRROR	MIR
MISCELLANEOUS	MISC
MONOLITHIC	MONO
N	
NORTH	N
NOT IN CONTRACT	NIC
NUMBER	NO. (#)
NOT TO SCALE	NTS
O	
OFFICE	OFF.
ON CENTER	OC
OPENING	OPNG
OPPOSITE	OPP
OUTSIDE DIAMETER	O.D.
P	
PANEL	PNL
PAPER TOWEL DISPENSER	PTD
PAPER TOWEL DISPENSER & RECEPTACLE	PTD/R
PAPER TOWEL RECEPTACLE	PTR
PARTITION	PRTN
PLASTER	PLAST
PLATE	PL OR P
PLUMBING	PLBG
PLYWOOD	PLY WD
PRECAST	PRCST
Q	
QUARRY TILE	Q.T.
QUARTERS	QTRS
R	
RADIUS	RAD
RECEPTACLE	RECP
REFERENCE	REF
REFRIGERATOR	REFR
REINFORCEMENT	REINF
REQUIRED	REQD
REVISIONS	REV
RISER	R
ROOFING	RFG
ROOM	RM
ROUGH	RGH
S	
SANITARY NAPKIN DISPENSER	SND
SANITARY NAPKIN RECEPTACLE	SNR
SCHEDULE	SCH
SEAT COVER DISPENSER	SCD
SERVICE SINK	SSK
SHEATHING	SHTHG
SHEET	SHT.
SHEET METAL	SHT. MET.
SHOWER	SHR
SIMILAR	SIM
SOAP DISPENSER	SD
SOLID CORE	SC
SOUTH	S
SPEAKER	SPKR
SPECIFICATION	SPEC
SPLASH BLOCK	SB
SQUARE	SQ OR ⊡
STANDARD	STD
STEEL	STL
STORAGE	STOR
STRUCTURAL	STRL
SUSPENDED	SUSP
SYMMETRICAL	SYM
T	
TELEPHONE	TEL
TEMPERATURE	TEMP
TEMPERED GLASS	T
TERRAZZO	TER
THICK	THK
TOILET PAPER DISPENSER	TPD
TOP OF CONCRETE	TOC
TOP OF CURB	TC
TOP OF PAVEMENT	TP
TOP OF STEEL	TOS
TOP OF WALL	TW
TOPOGRAPHY	TOPO
TYPICAL	TYP
U	
UNLESS OTHERWISE NOTED	UON
URINAL	UR
V	
VENTILATOR	VENT
VENT THRU ROOF	VTR
VERTICAL	VERT
VESTIBULE	VEST
W	
WATER CLOSET	WC
WEIGHT	WT
WELDED WIRE FABRIC	WWF
WINDOW	W/
WITH	W/
WITHOUT	W/O
WOOD	WD

SYMBOLS

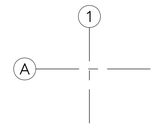

GRID LINES

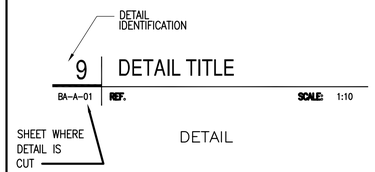

DETAIL

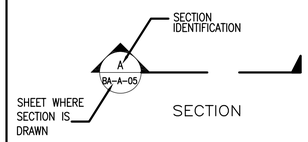

SECTION

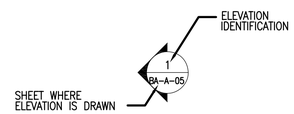

EXTERIOR ELEVATION

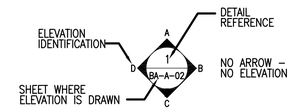

INTERIOR ELEVATION

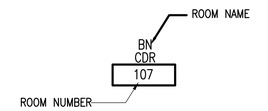

ROOM IDENTIFICATION

D3

DOOR NUMBER

WA

WINDOW NUMBER

L1

LOUVER NUMBER

MATERIAL LEGEND

- CONCRETE
- CONCRETE MASONRY UNIT (CMU)
- SAND, MORTAR
- METAL STUD WALL
- WOOD – FRAMING
- WOOD BLOCKING
- METAL
- INSULATION, BATT
- GYPSUM BOARD
- WOOD – FINISH

GENERAL NOTES:

UNLESS OTHERWISE NOTED, LINEAR DIMENSIONS SHOWN ARE IN MILLIMETERS.

SYMBOL	DESCRIPTION	DATE	APP.

Designed By: R. BROWN
Drawn By: D. GRIFFIN
Checked By: R. BROWN
Date: 10 MAY 2007
File No. AF0707
I.S.O. Sheet File Name: AF0707CE–AR00GN.dwg
Solicitation Number: –
B. THOMAS

US Army Corps of Engineers
Transatlantic Programs Center

ANA REGIONAL BRIGADE
PAKTIKA, AFGHANISTAN
EMBEDDED TRAINING FACILITY
DFAC 2
ABBREVIATIONS & SYMBOLS

SHEET REFERENCE NUMBER:
CE–A–00

$DATE$
$FILE$

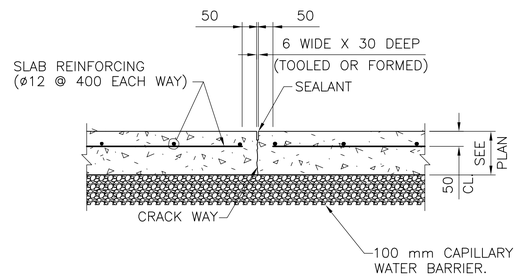

1 SLAB ON GRADE OR PAVEMENT CONTROL JOINT

CE-SS-03 REF. SCALE: 1:10

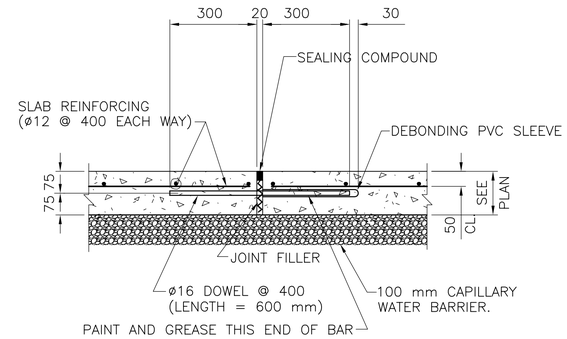

2 PAVEMENT EXPANSION JOINT

CE-SS-03 REF. SCALE: 1:10

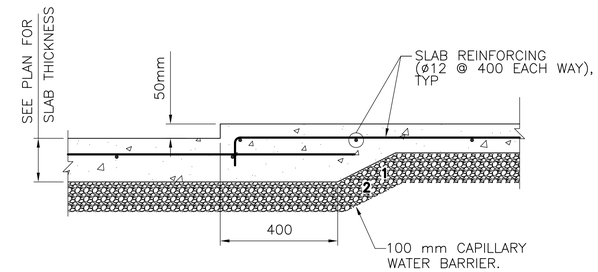

3 DEPRESSED SLAB DETAIL

CE-SS-03 REF. SCALE: 1:10

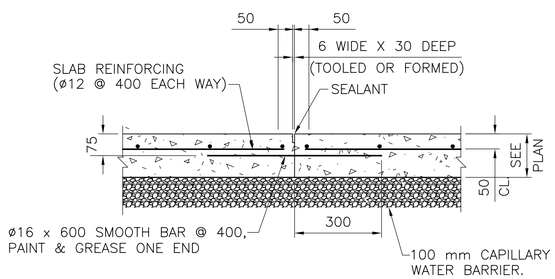

4 SLAB ON GRADE OR PAVEMENT CONSTRUCTION JOINT

CE-SS-03 REF. SCALE: 1:10

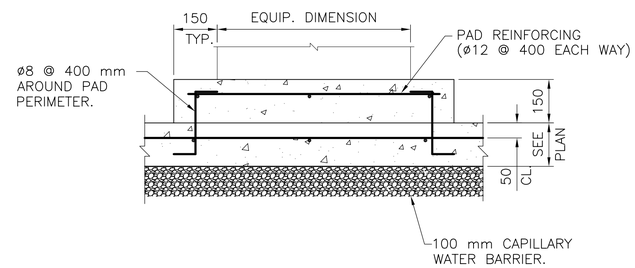

5 INTERIOR EQUIPMENT PAD DETAIL

CE-SS-03 REF. SCALE: 1:10

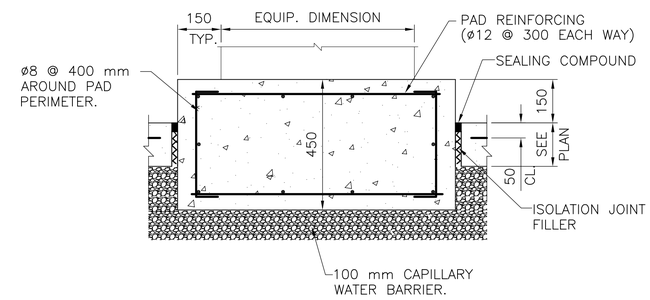

6 LARGE EQUIPMENT ISOLATION PAD DETAIL

CE-SS-03 REF. SCALE: 1:10

200 0 200mm
SCALE: 1 = 10

UNLESS OTHERWISE NOTED, LINEAR DIMENSIONS SHOWN ARE IN MILLIMETERS.

SYMBOL	DESCRIPTION	DATE	APR

Designed By: D. SMITH
Drawn By: D. SMITH
Checked By: M. THOMPSON
Date: 10 MAY 2007
File No. AF0707
P.S.O. Sheet File Name: AF0707CE-SS03DT.DWG
Solicitation Number: –

US Army Corps of Engineers Transatlantic Programs Center

ANA REGIONAL BRIGADE
PAKTIKA, AFGHANISTAN
EMBEDDED TRAINING FACILITY
DFAC 2

TYPICAL SLAB ON GRADE DETAILS

SHEET REFERENCE NUMBER:
CE-SS-03

$DATE$
$FILE$

D SIZE BORDER
32 X 20.5

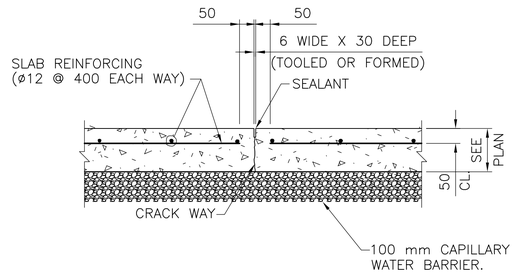

1 SLAB ON GRADE OR PAVEMENT CONTROL JOINT

DB-SS-03 REF. SCALE: 1:10

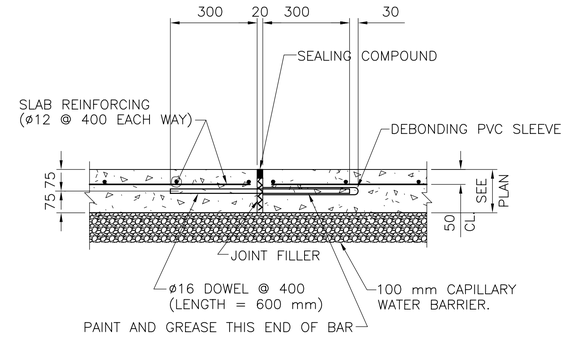

2 PAVEMENT EXPANSION JOINT

DB-SS-03 REF. SCALE: 1:10

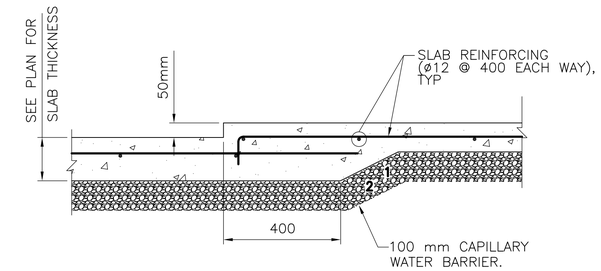

3 DEPRESSED SLAB DETAIL

DB-SS-03 REF. SCALE: 1:10

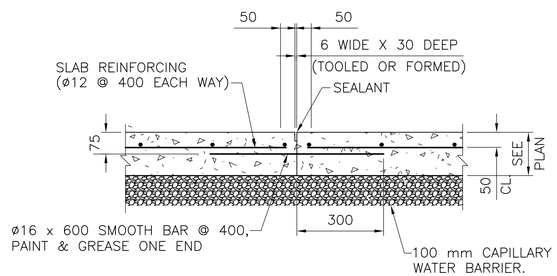

4 SLAB ON GRADE OR PAVEMENT CONSTRUCTION JOINT

DB-SS-03 REF. SCALE: 1:10

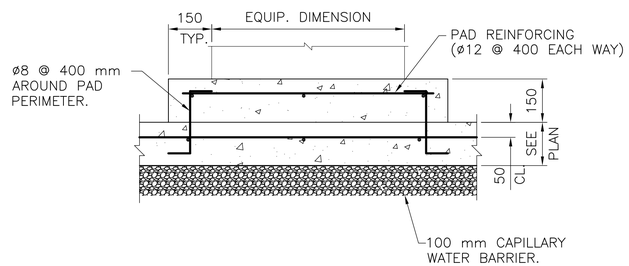

5 INTERIOR EQUIPMENT PAD DETAIL

DB-SS-03 REF. SCALE: 1:10

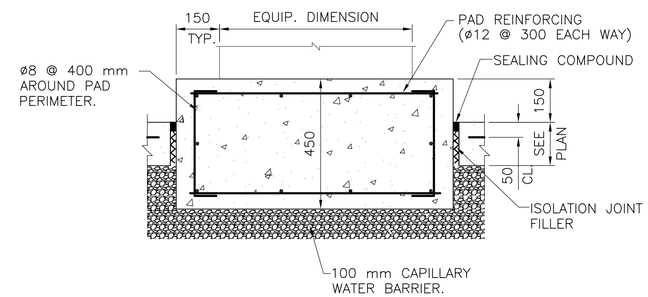

6 LARGE EQUIPMENT ISOLATION PAD DETAIL

DB-SS-03 REF. SCALE: 1:10

200 0 200mm
SCALE: 1 = 10

UNLESS OTHERWISE NOTED, LINEAR DIMENSIONS SHOWN ARE IN MILLIMETERS.

SYMBOL	DESCRIPTION	DATE	APP.

Designed By: D. SMITH
Date: 10 MAY 2007
Drawn By: D. SMITH
File No. AF0707
Checked By: M. THOMPSON
I.S.D. Sheet File Name: AF0707DB-SS03DT.DWG
Solicitation Number: –

US Army Corps of Engineers
Transatlantic Programs Center

ANA REGIONAL BRIGADE
PAKTIKA, AFGHANISTAN
INTERPRETER FACILITIES
MWR

TYPICAL SLAB ON GRADE DETAILS

SHEET REFERENCE NUMBER:
DB-SS-03

$DATE$
$FILE$

D SIZE BORDER
32 X 20.5

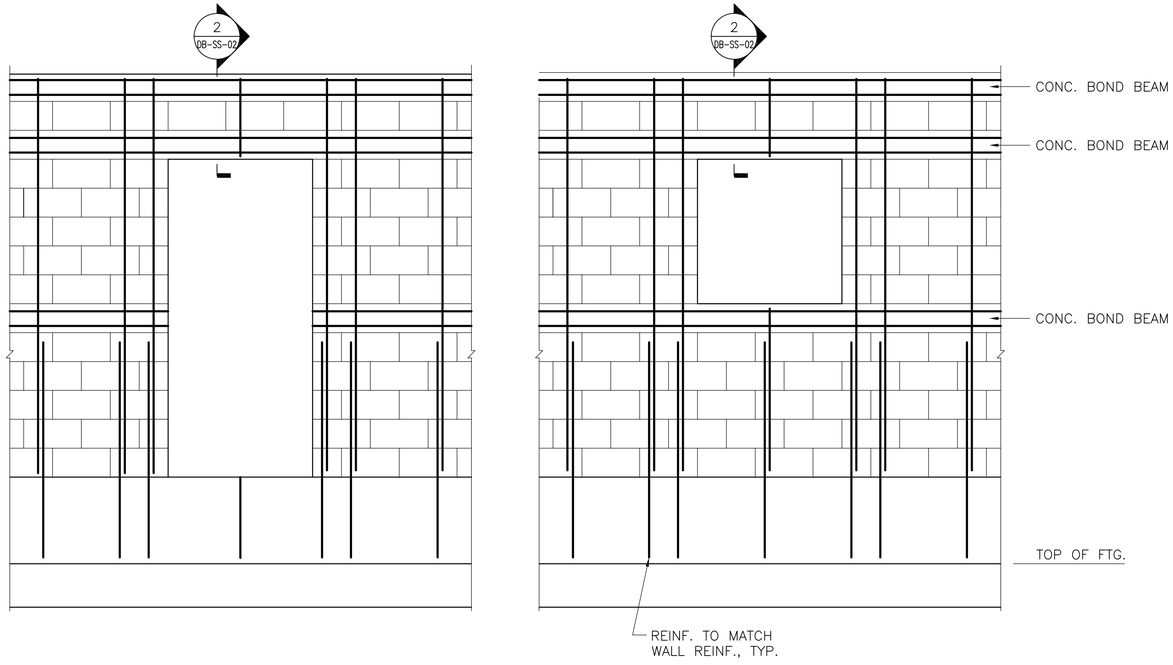

1 | CMU WALL PARTIAL ELEVATION

DB-SS-02 | REF. | SCALE: 1:20

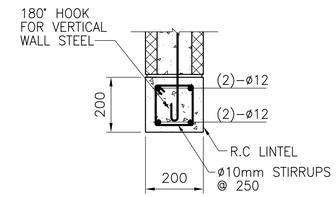

2 | LINTEL SECTION

DB-SS-02 | REF. | SCALE: 1:10

200 0 200mm
SCALE: 1 = 10

UNLESS OTHERWISE NOTED, LINEAR DIMENSIONS SHOWN ARE IN MILLIMETERS.

SYMBOL	DESCRIPTION	DATE	APPR

Designed By:
Drawn By:
Checked By:
Date: 10 MAY 2007
File No: AF0707
I.S.D. Sheet File Name: AF0707DB-SS02DT.DWG
Solicitation Number: –

US Army Corps of Engineers
Transatlantic Programs Center

ANA REGIONAL BRIGADE
PAKTIKA, AFGHANISTAN
INTERPRETER FACILITIES
MWR

TYPICAL MASONRY DETAILS

SHEET REFERENCE NUMBER:
DB-SS-02

$DATE$
$FILE$

D SIZE BORDER
32 X 20.5

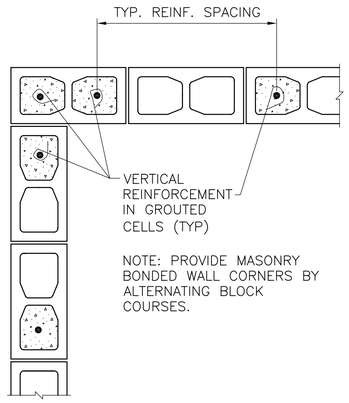

1 TYPICAL CMU CORNER WALL REINFORCING DETAIL

DB-SS-01 REF. SCALE: 1:10

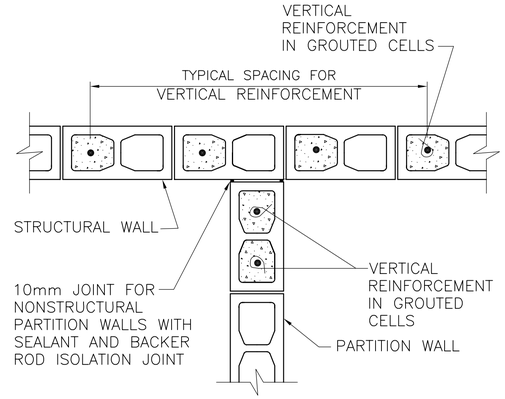

2 TYPICAL CMU PARTITION WALL REINFORCING DETAIL

DB-SS-01 REF. SCALE:

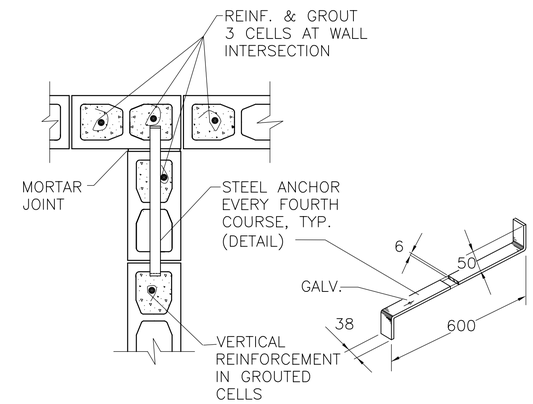

3 TYPICAL CMU STRUCTURAL WALL REINFORCING DETAIL

DB-SS-01 REF. SCALE: 1:10

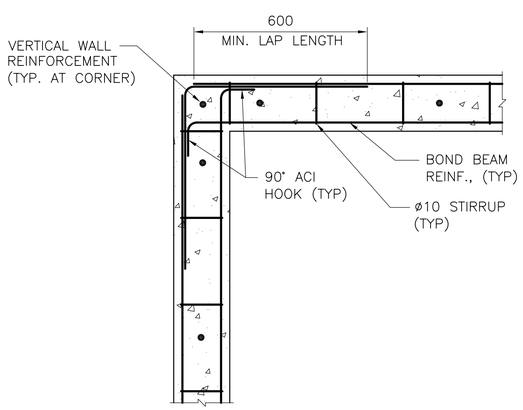

4 TYPICAL CIP CONCRETE BOND BEAM REINFORCING DETAIL

DB-SS-01 REF. SCALE: 1:10

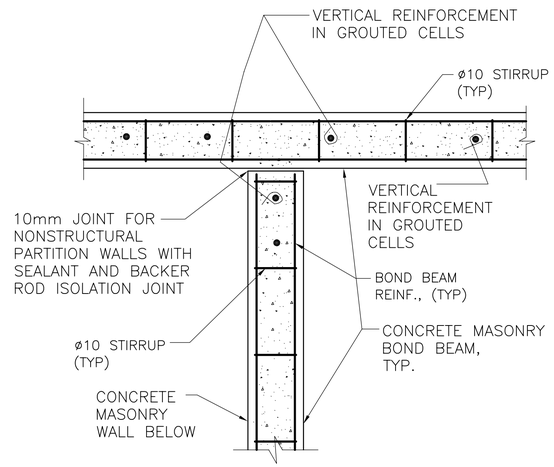

5 TYPICAL CIP CONCRETE BOND BEAM REINFORCING DETAIL

DB-SS-01 REF. SCALE: 1:10

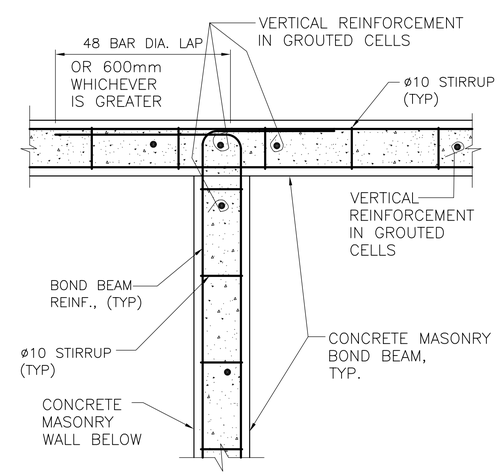

6 TYPICAL CIP CONCRETE BOND BEAM REINFORCING DETAIL

DB-SS-01 REF. SCALE: 1:10

200 0 200mm
SCALE: 1 = 10

UNLESS OTHERWISE NOTED, LINEAR DIMENSIONS SHOWN ARE IN MILLIMETERS.

SYMBOL	DESCRIPTION	DATE	APR

Designed By:
Drawn By:
Checked By:
Date: 10 MAY 2007
File No. AF0707
I.S.O. Sheet File Name: AF0707DB-SS01DT.DWG
Solicitation Number: –

US Army Corps of Engineers Transatlantic Programs Center

ANA REGIONAL BRIGADE
PAKTIKA, AFGHANISTAN
INTERPRETER FACILITIES
MWR

TYPICAL MASONRY DETAILS

SHEET REFERENCE NUMBER:
DB-SS-01

$DATE$
$FILE$

D SIZE BORDER
32 X 20.5

GENERAL:

1. CONTRACTOR SHALL VERIFY ALL DIMENSIONS AND CONDITIONS AFFECTING THE WORK AT JOBSITE.

2. ALL STRUCTURAL WORK AND MATERIALS SHALL CONFORM TO THE REQUIREMENTS OF THE PROJECT SPECIFICATIONS.

3. FOR LOCATION AND DIMENSIONS OF GROOVES, REGLETS, SLEEVES, OPENINGS, AND EMBEDDED OR ATTACHED ITEMS, REFER TO ARCHITECTURAL, MECHANICAL, ELECTRICAL, AND PIPING DRAWINGS.

CODES:

1. ALL PARTS SHALL BE FURNISHED AND ERECTED ACCORDING TO THE APPLICABLE CODES AND SPECIFICATIONS OF THE FOLLOWING:

AMERICAN CONCRETE INSTITUTE	(ACI)
AMERICAN INSTITUTE OF STEEL CONSTRUCTION	(AISC)
AMERICAN IRON AND STEEL INSTITUTE	(AISI)
AMERICAN WELDING SOCIETY	(AWS)
MINIMUM DESIGN LOADS FOR BUILDINGS AND OTHER STRUCTURES	(ASCE)
INTERNATIONAL BUILDING CODE	(IBC)

DESIGN LOADS:

1. ROOF LOADING

A. LIVE LOAD 100 KG/SQ METER (20 PSF)
B. SNOW LOAD 75 KG/SQ METER (15 PSF)
C. COLLATERAL LOAD 50 KG/SQ METER (10 PSF)

2. WIND LOADING

A. BASIC WIND SPEED 145 KM/HR (90 MPH)
B. EXPOSURE CATEGORY "B"
C. IMPORTANCE FACTOR, Iw = 1.00
D. BUILDING CATEGORY "II"
E. MAX. FRAME DRIFT DUE TO 10-YEAR WIND = H/200

3. SEISMIC LOADING:

A. Ss = 1.28g
B. S1 = 0.51g
C. SEISMIC USE GROUP "I"
D. SITE CLASSIFICATION "D"
E. IMPORTANCE FACTOR I = 1.0

BASIC SEISMIC FORCE RESISTING SYSTEM:

CANTILEVER CMU WALL SYSTEM WITH INTERMEDIATE STEEL MOMENT FRAMES

DESIGN BASE SHEAR: 0.34W FOR CMU CANTILEVER WALLS.
0.19W FOR INTERMEDIATE STEEL MOMENT FRAMES.

ANALYSIS PROCEDURE: EQUIVALENT LATERAL FORCE METHOD

FOUNDATIONS:

1. ALL FOOTINGS SHALL BEAR ON SOIL CAPABLE OF SUSTAINING THE LOADS.

2. CONTINUOUS WALL FOOTINGS WERE DESIGNED FOR A SOIL BEARING CAPACITY OF 9765 KG/SQ. METER (2000 PSF). ISOLATED COLUMN FOOTINGS WERE DESIGNED FOR A MAXIMUM BEARING CAPACITY OF 9765 KG/SQ. METER (2000 PSF).

3. ELEVATIONS SHOWN ON PLANS FOR TOP OF FOOTINGS ARE MINIMUM DEPTH. DIFFERENT OR UNUSUAL CONDITIONS SHALL BE REPORTED TO THE CONTRACTING OFFICER.

4. ALL FOOTING REINFORCEMENT SHALL BE SECURELY SUPPORTED ABOVE GROUND. CONCRETE BLOCK AND BROKEN TILE SHALL NOT BE USED. CONCRETE OR CLAY BRICK MAY BE USED.

CONCRETE:

1. STRUCTURAL CONCRETE FOR THE BUILDING STRUCTURE SHALL HAVE THE FOLLOWING PROPERTIES:

FOOTINGS: f'c = 210 KG/SQ. CM (3,000 PSI) AT 28 DAYS
SLABS: f'c = 210 KG/SQ. CM (3,000 PSI) AT 28 DAYS

2. ALL REINFORCING STEEL SHALL BE DEFORMED BARS CONFORMING TO ASTM A615 GRADE 60 UNLESS NOTED OTHERWISE.

3. LOCATION OF ALL CONCRETE JOINTS, OTHER THAN THOSE SPECIFIED, SHALL BE APPROVED BY THE CONTRACTING OFFICER BEFORE CONCRETE PLACEMENT.

4. MINIMUM PROTECTIVE COVER OF REINFORCEMENT (SEE DETAILS) SHALL BE AS FOLLOWS:

FOOTINGS, 75mm CLEAR BOTTOM AND SIDES, 40mm CLEAR TOP.
CONCRETE SLABS-ON-GRADE, 25mm CLEAR TOP.
WALLS, 40mm CLEAR SIDES.
CONCRETE PIERS, 40mm CLEAR TO TIES.

5. MINIMUM CONCRETE SPLICES AND HOOKS FOR REINFORCING STEEL SHALL CONFORM TO ACI 318, CURRENT EDITION.

6. CONCRETE WORK SHALL BE COORDINATED WITH DRAINS, UNDERGROUND UTILITIES, MECHANICAL, ELECTRICAL, AND ARCHITECTURAL PLANS. CONCRETE SHALL NOT BE CAST UNTIL THESE ITEMS HAVE BEEN INSTALLED AND ACCEPTED.

7. CONCRETE FINISHES SHALL BE PROVIDED AS DESCRIBED IN THE SPECIFICATIONS.

8. CORNER BARS SHALL BE PROVIDED AT ALL INTERSECTIONS; BAR SIZE AND SPACING TO MATCH LARGER BAR.

9. SLABS ON GRADE SHALL BE REINFORCED AT ALL PENETRATIONS AND RE-ENTRANT CORNERS. PLACE 3-ø10 x 1.0 METER AROUND FLOOR DRAINS. PLACE 2-ø12 x 1.0 METER (MINIMUM) AT RE-ENTRANT CORNERS.

STRUCTURAL STEEL:

1. STRUCTURAL STEEL SHALL BE FABRICATED AND ERECTED IN ACCORDANCE WITH THE AMERICAN INSTITUTE OF STEEL CONSTRUCTION, "SPECIFICATION FOR STRUCTURAL STEEL BUILDINGS", 1989 (AISC ASD MANUAL, 9TH EDITION).

2. STEEL SHALL CONFORM TO THE FOLLOWING REQUIREMENTS UNLESS NOTED OTHERWISE:

MISCELLANEOUS PLATES AND ANGLES – ASTM A36 (Fy = 36 KSI)
RECTANGULAR HSS – ASTM A500, GRADE B (Fy = 46 KSI)
"W" SHAPES – ASTM A992

3. NO STRUCTURAL STEEL SHALL BE FABRICATED OR ERECTED UNTIL SHOP DRAWINGS HAVE BEEN APPROVED.

4. NO HOLES OTHER THAN THOSE SPECIFICALLY DETAILED SHALL BE ALLOWED THROUGH STRUCTURAL STEEL MEMBERS. CUTTING OF STEEL SHALL NOT BE PERMITTED WITHOUT APPROVAL OF THE CONTRACTING OFFICER.

5. THE CONTRACTOR SHALL VERIFY ALL SHOP DRAWING DIMENSIONS WITH THE STRUCTURAL AND ARCHITECTURAL PLANS AND DETAILS, AND WITH FIELD DIMENSIONS OF COLUMN LAYOUT.

7. BOLTED CONNECTIONS SHALL BE MADE WITH HIGH STRENGTH BOLTS CONFORMING TO ASTM A325, 20mm DIAMETER MINIMUM UNLESS NOTED OTHERWISE.

8. CONNECTIONS NOT SHOWN ON DRAWINGS SHALL BE DESIGNED BY THE FABRICATOR. CONNECTIONS SHALL BE SELECTED TO SUPPORT ONE HALF THE TOTAL UNIFORM LOAD CAPACITY SHOWN IN THE ALLOWABLE LOAD TABLES, PART 2 OF LATEST AISC MANUAL FOR THE GIVEN BEAM, SPAN, AND GRADE OF STEEL SPECIFIED. WHERE POSSIBLE, DOUBLE ANGLE CONNECTIONS SHALL BE USED.

MASONRY:

1. ENGINEERED MASONRY IS DESIGNED IN ACCORDANCE WITH "BUILDING CODE REQUIREMENTS FOR MASONRY STRUCTURES" (ACI 530-99/ ASCE 5-99/TMS 402-99).

2. UNITS: ASTM C90, TYPE (I) (NORMAL WEIGHT, MOISTURE CONTROLLED) (OR EQUIVALENT DIN, ACI OR EN STANDARDS) MORTAR: ASTM C270 TYPE S (OR EQUIVALENT DIN, ACI OR EN STANDARDS)

3. FULLY GROUT ALL CELLS CONTAINING REINFORCING STEEL OR ANCHORS UNLESS NOTRED OTHERWISE.

4. USE 50 db FULL CONTACT LAP SPLICES FOR REINFORCING STEEL IN CMU WALLS UNLESS NOTED OTHERWISE.

5. SEE SPECIFICATION 04200 FOR MASONRY BLOCK. ALL VERTICAL CELLS OF MASONRY BLOCK WITH REINFORCING SHALL BE GROUTED SOLID TO FORM A COMPOSITE MASONRY AND STEEL ASSEMBLY.

6. PROVIDE AN ADDITIONAL VERTICAL REINFORCEMENT AT EACH SIDE OF INTERSECTION OF EXTERIOR WALLS, AND AT EACH SIDE OF ALL MASONRY OPENINGS GREATER THAN 250mm IN WIDTH. IN OPENINGS WIDER THAN 600mm, PROVIDE ADDITIONAL VERTICAL REINFORCEMENT IN TWO ADJACENT CELLS ON EACH SIDE OF THE OPENING. ADDED VERTICAL REINFORCEMENT SHALL BE CONTINUOUS FOR THE FULL HEIGHT OF WALL.

7. PROVIDE BOND BEAMS AT 1200mm MAXIMUM VERTICAL SPACING (EXCEPT AT RESTROOM AND SHOWER STALL PARTITION WALLS).

8. PROVIDE LINTEL ABOVE ALL MASONRY OPENINGS AS SHOWN IN DETAIL 3/SS-02.

9. PROVIDE A BOND BEAM BELOW ALL MASONRY OPENINGS AND EXTEND A MINIMUM OF 400mm BEYOND EACH SIDE OF OPENING.

UNLESS OTHERWISE NOTED, LINEAR DIMENSIONS SHOWN ARE IN MILLIMETERS.

SYMBOL	DESCRIPTION	DATE	APP.

Designed By:
Drawn By:
Checked By:
Date: 10 MAY 2007
File No. AF0707
U.S.D. Sheet File Name: AF0707DB-SS00DT.DWG
Solicitation Number: –

US Army Corps of Engineers
Transatlantic Programs Center

ANA REGIONAL BRIGADE
PAKTIKA, AFGHANISTAN
INTERPRETER FACILITIES
MWR

TYPICAL MASONRY DETAILS

SHEET REFERENCE NUMBER:
DB-SS-00

$DATE$
$FILE$

D SIZE BORDER
32 X 20.5

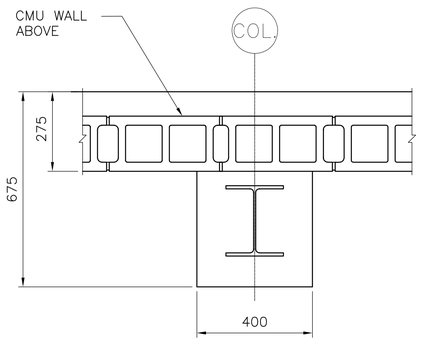

(SLAB LEVEL)

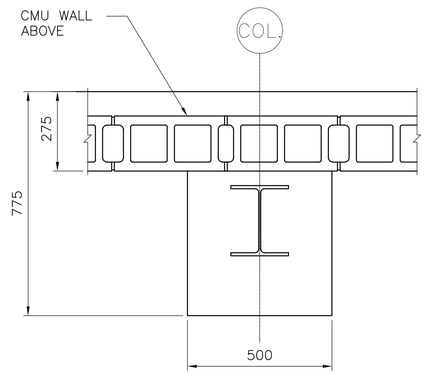

(SLAB LEVEL)

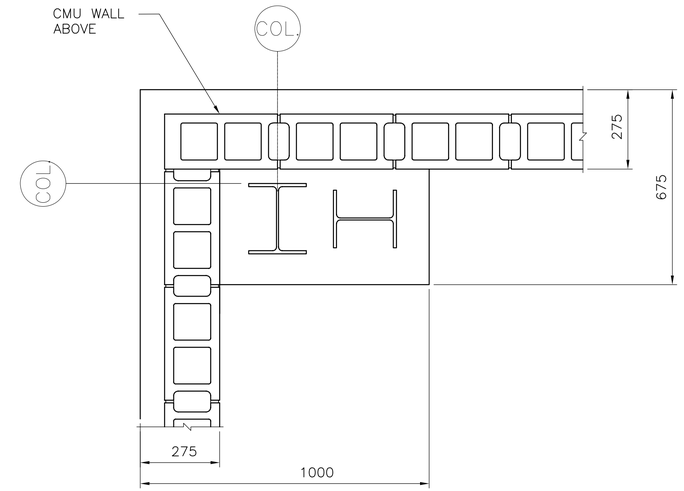

(SLAB LEVEL)

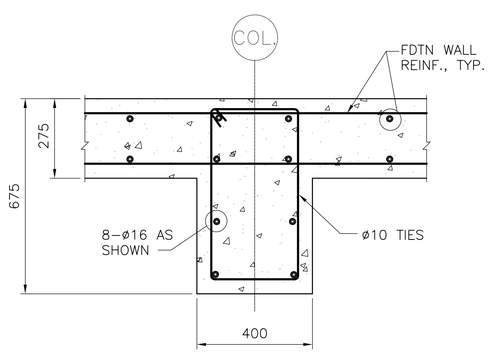

(FOUNDATION LEVEL)

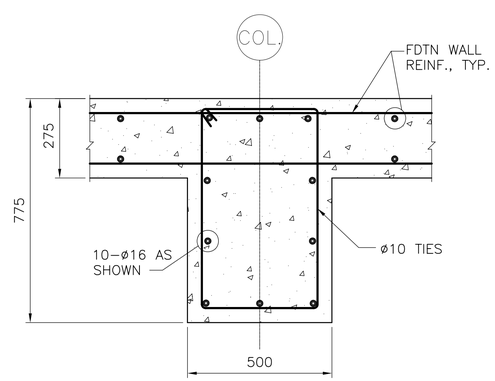

(FOUNDATION LEVEL)

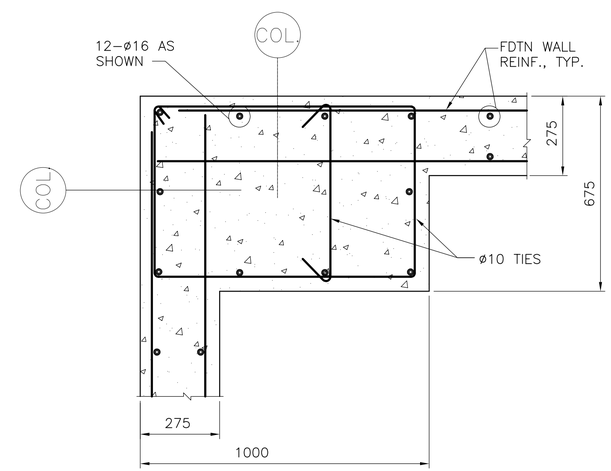

(FOUNDATION LEVEL)

- PEDESTAL P1

DB–S–01 REF. SCALE: 1:10

- PEDESTAL P2

DB–S–01 REF. SCALE: 1:10

- PEDESTAL P3

DB–S–01 REF. SCALE: 1:10

200 0 200mm
SCALE: 1 = 10

UNLESS OTHERWISE NOTED, LINEAR DIMENSIONS SHOWN ARE IN MILLIMETERS.

SYMBOL	DESCRIPTION	DATE	APR

Designed By: M. THOMPSON
Date: 10 MAY 2007
Drawn By: D. SMITH
File No. AF0707
Checked By: M. THOMPSON
I.S.O. Sheet File Name: AF0707DB–SB04SE.DWG
Solicitation Number: –

US Army Corps of Engineers
Transatlantic Programs Center

ANA REGIONAL BRIGADE
PAKTIKA, AFGHANISTAN
INTERPRETER FACILITIES
MWR
COLUMN
PEDESTAL DETAILS

SHEET REFERENCE NUMBER:
DB–S–04

$DATE$
$FILE$

D SIZE BORDER
32 X 20.5

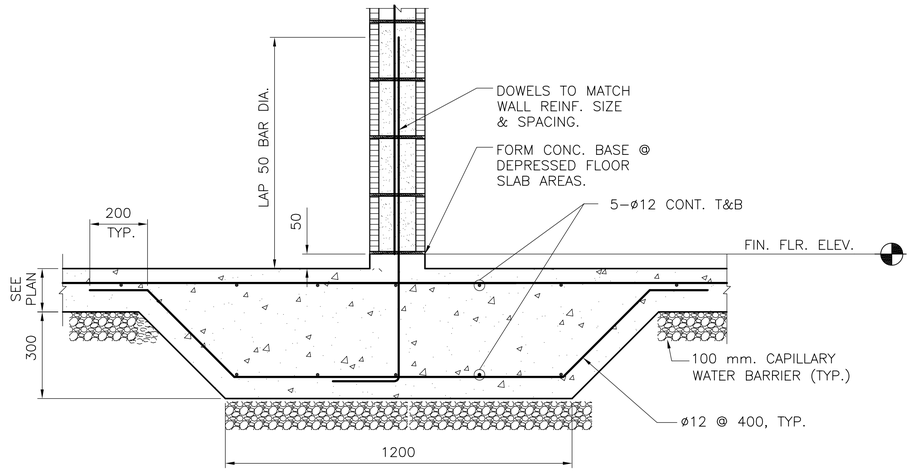

1 SECTION AT THICKENED SLAB

DB–S–01 REF. SCALE: 1:10

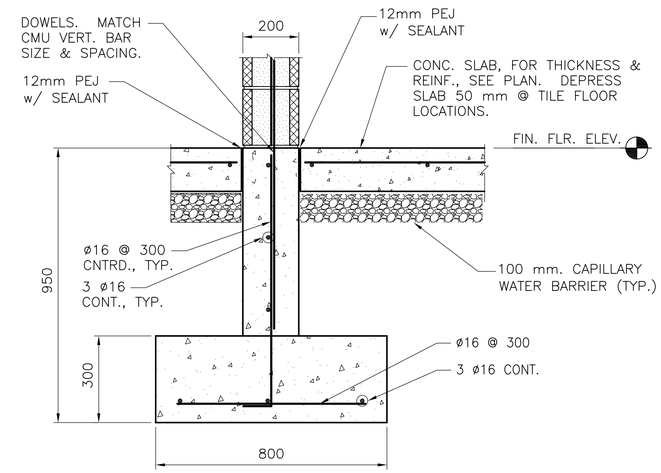

2 SECTION AT STEM WALL

DB–S–01 REF. SCALE: 1:10

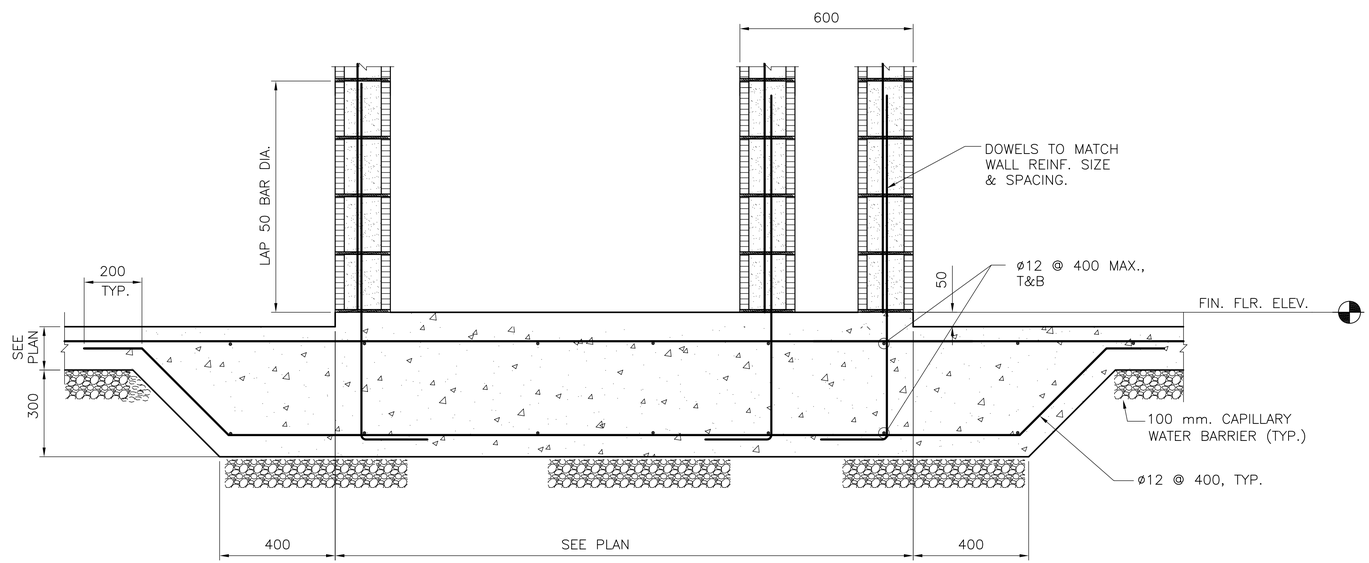

3 SECTION AT RESTROOM STALL PARTITION WALLS

DB–S–01 REF. SCALE: 1:10

200 0 200mm
SCALE: 1 = 10

UNLESS OTHERWISE NOTED, LINEAR DIMENSIONS SHOWN ARE IN MILLIMETERS.

SYMBOL	DESCRIPTION	DATE	APPR.

Designed By: D. SMITH
Date: 10 MAY 2007
Drawn By: D. SMITH
File No: AF0707
Checked By: M. THOMPSON
I.S.O. Sheet File Name: AF0707DB–SB03SE.DWG
Solicitation Number: –

US Army Corps of Engineers Transatlantic Programs Center

ANA REGIONAL BRIGADE
PAKTIKA, AFGHANISTAN
INTERPRETER FACILITIES
MWR

THICKENED SLAB & FOUNDATION SECTIONS

SHEET REFERENCE NUMBER:
DB–S–03

$DATE$
$FILE$

D SIZE BORDER
32 X 20.5

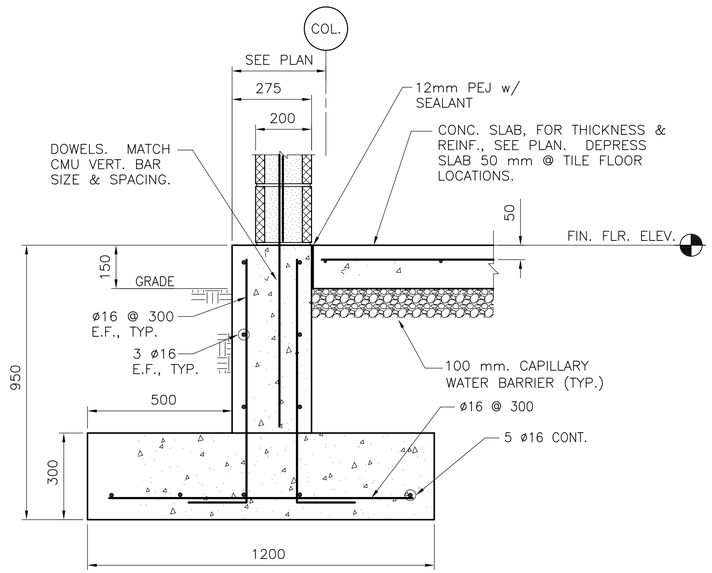

1 SECTION AT EXTERIOR CMU WALL

DB-S-01 REF. SCALE: 1:10

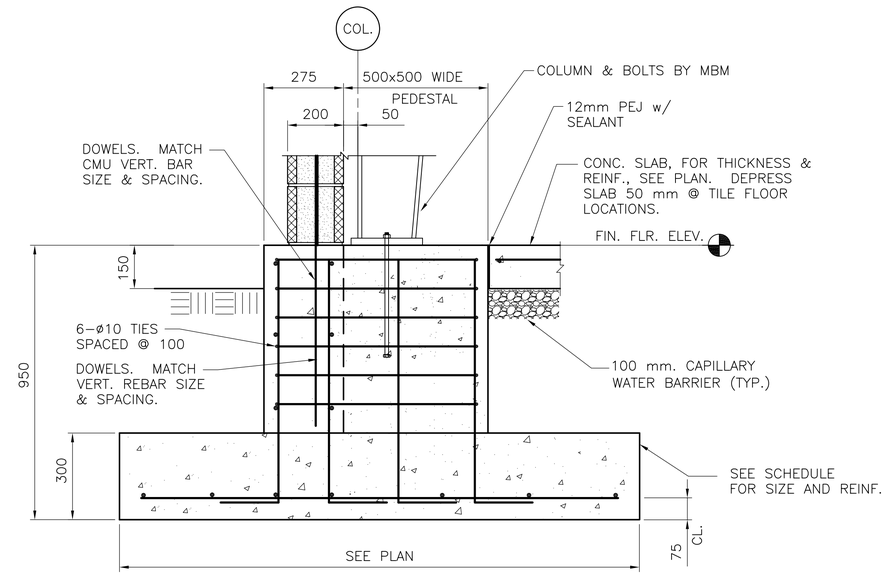

2 SECTION AT SIDEWALL COLUMN FOOTING

DB-S-01 REF. SCALE: 1:10

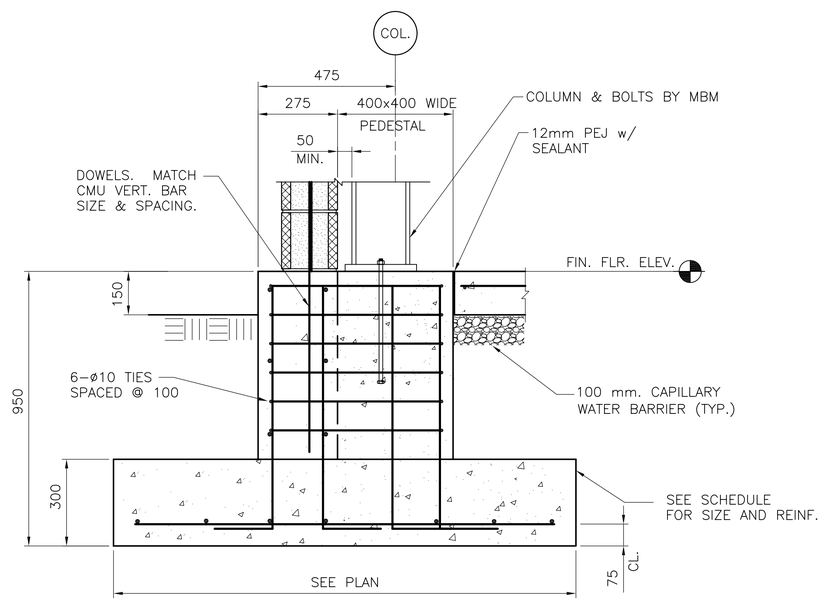

3 SECTION AT ENDWALL COLUMN FOOTING

DB-S-01 REF. SCALE: 1:10

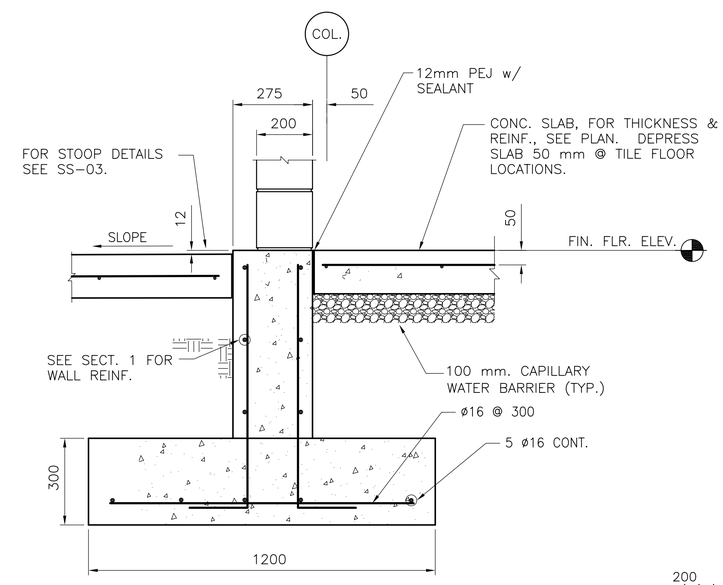

4 SECTION AT EXTERIOR DOOR

DB-S-01 REF. SCALE: 1:10

200 0 200mm
SCALE: 1 = 10

UNLESS OTHERWISE NOTED, LINEAR DIMENSIONS SHOWN ARE IN MILLIMETERS.

SYMBOL	DESCRIPTION	DATE	APR

Designed By: D. SMITH
Drawn By: D. SMITH
Checked By: M. THOMPSON
Date: 10 MAY 2007
File No: AF0707
I.S.D. Sheet File Name: AF0707DBSB02SE.DWG
Solicitation Number: –

US Army Corps of Engineers Transatlantic Programs Center

ANA REGIONAL BRIGADE
PAKTIKA, AFGHANISTAN
INTERPRETER FACILITIES
MWR

FOUNDATION SECTIONS –

SHEET REFERENCE NUMBER:
DB-S-02

$DATE$
$FILE$

D SIZE BORDER
32 X 20.5

SHEET NOTES:

1. CONT. UPPER BOND BEAM 200x200 W/ 2–ø12 CONT BARS TOP & BOT.

2. CMU WALL REINFORCEMENT SHALL BE ø16 @ 600 U.N.O. GROUT VERTICAL CELLS WITH REINFORCEMENT.

3. TOP OF CMU WALL ELEVATION SHALL BE 2.8M A.F.F., UNLESS NOTED OTHERWISE.

5. REFER TO SHEET DB–SS–01 AND 02 FOR TYPICAL MASONRY DETAILS.

6. REFER TO SHEET DB–SS–03 FOR TYPICAL SLAB ON GRADE DETAILS.

7. REFER TO SHEET DB–SS–04 FOR TYPICAL EXTERIOR CONCRETE PAD DETAILS.

8. SLAB ON GRADE SHALL BE 150 MM CONCRETE ON A 100 MM CAPILLARY WATER BARRIER. SEE SHEET DB–SS–03 FOR TYPICAL SLAB REINFORCEMENT.

COLUMN FOOTING SCHEDULE

MARK	SIZE	REINFORCING	PEDESTAL MARK
F1	1000 x 1600 x 300mm	TRANSVERSE – 7 ø16 (B) LONGITUDINAL – 4 ø16 (B)	P1
F2	1500 x 1800 x 300mm	TRANSVERSE – 7 ø16 (B) LONGITUDINAL – 6 ø16 (B)	P2
F3	1600 x 1800 x 300mm	TRANSVERSE – 7 ø16 (B) LONGITUDINAL – 6 ø16 (B)	P3

NOTE: FOR PEDESTAL DETAILS AND REINFORCEMENT, SEE SHEET DB–S–04.

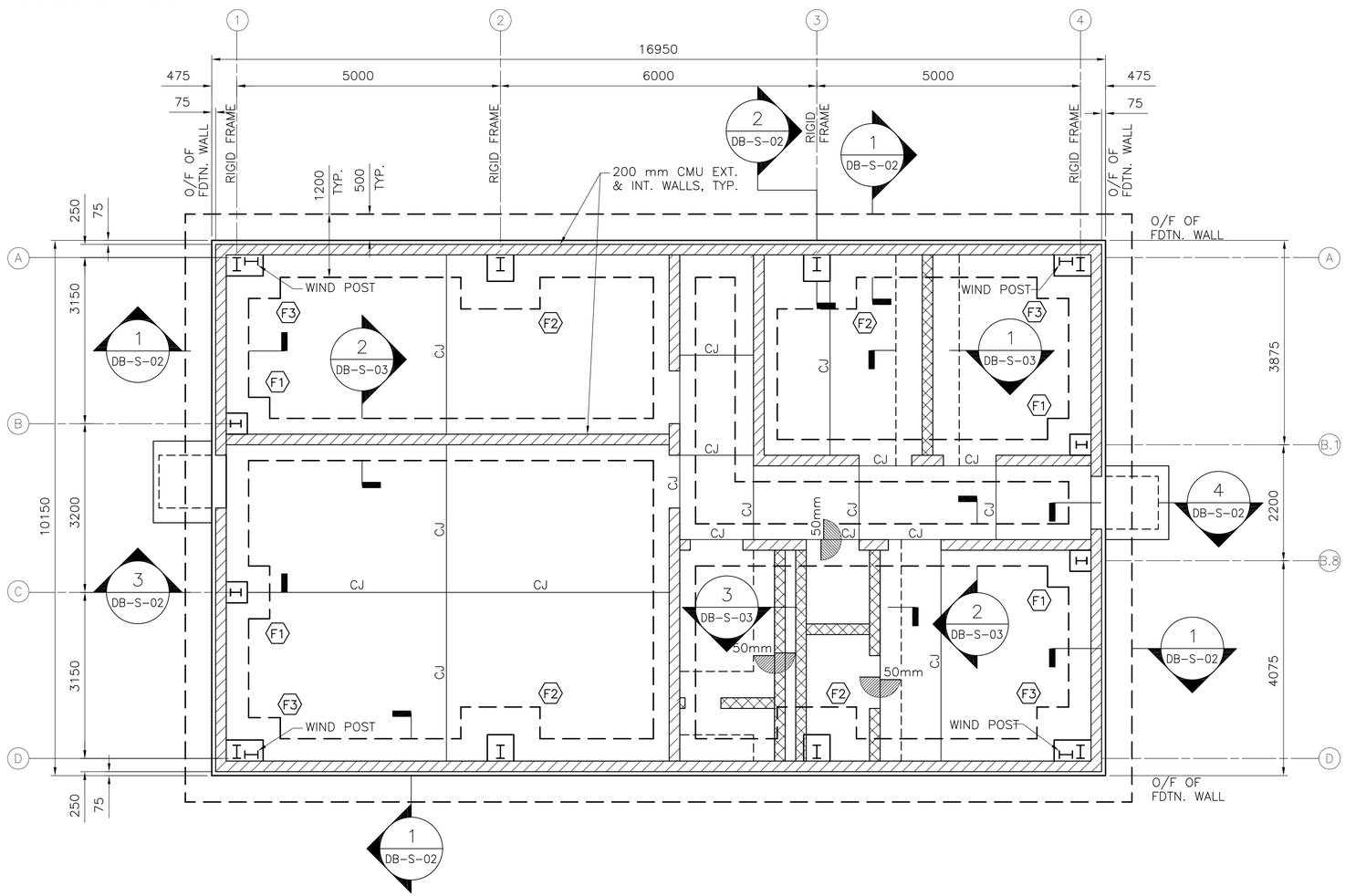

1 FOUNDATION PLAN

DB–S–01 REF. SCALE: 1:50

PRE–ENGINEERED BUILDING DESIGN REQUIREMENTS:

1. THE DESIGN SHALL BE IN ACCORDANCE WITH THE 2003 INTERNATIONAL BUILDING CODE.

2. ROOF LOADING

   A. LIVE LOAD 100 KG/SQ METER (20 PSF)
   B. SNOW LOAD 75 KG/SQ METER (15 PSF)
   C. COLLATERAL LOAD 50 KG/SQ METER (10 PSF)

3. WIND LOADING

   A. BASIC WIND SPEED 145 KM/HR (90 MPH)
   B. EXPOSURE CATEGORY "B"
   C. IMPORTANCE FACTOR, Iw = 1.00
   D. BUILDING CATEGORY "II"
   E. MAX. FRAME DRIFT DUE TO 10–YEAR WIND = H/200.

4. SEISMIC LOADING

   A. Ss = 1.28g
   B. S1 = 0.51g
   C. SEISMIC USE GROUP "I"
   D. SITE CLASSIFICATION "D"
   E. IMPORTANCE FACTOR I = 1.0

5. COLUMN BASE PLATES HAVE BEEN ASSUMED AS "PINNED" FOR THE FOUNDATION SHOWN.

6. LONGITUDINAL "WIND COLUMN" LOCATIONS HAVE BEEN SHOWN AT THE PREFERRED LOCATIONS. COORDINATE COLUMN LOCATIONS WITH MECHANICAL AND ELECTRICAL EQUIPMENT. ENLARGE PIER SIZES AS REQUIRED.

7. THE METAL BUILDING MANUFACTURER SHALL PROVIDE THE DESIGN, FABRICATION AND DELIVERY OF ALL BUILDING ANCHOR BOLTS. THE BUILDING MANUFACTURER SHALL PROVIDE SETTING TEMPLATES FOR ALL EMBEDDED ANCHOR BOLTS. ALL ANCHOR BOLTS SHALL BE THE "HEADED" TYPE, BENT "L" BOLTS WILL NOT BE ACCEPTABLE.

8. SUBMITTAL OF SHOP DRAWINGS AND DESIGN CALCULATIONS IS REQUIRED PRIOR TO FABRICATION.

LEGEND:

CANTILEVERED CMU WALL ON SPREAD FOOTING; TOW AT EL 2800

CANTILEVERED CMU WALL ON THICKENED SLAB; TOW AT EL 2800

1000 0 1000mm
SCALE: 1 = 50

UNLESS OTHERWISE NOTED, LINEAR DIMENSIONS SHOWN ARE IN MILLIMETERS.

SYMBOL	DESCRIPTION	DATE	APP.

Designed By: M. THOMPSON
Date: 10 MAY 2007
Drawn By: D. SMITH
File No: AF0707
Checked By: D. SMITH
I.S.O. Sheet File Name: AF0707DB–SB01PN.DWG
Solicitation Number: –

US Army Corps of Engineers Transatlantic Programs Center

ANA REGIONAL BRIGADE
PAKTIKA, AFGHANISTAN
INTERPRETER FACILITIES
MWR

FOUNDATION PLAN

SHEET REFERENCE NUMBER:
DB–S–01

$DATE$
$FILE$

D SIZE BORDER
32 X 20.5

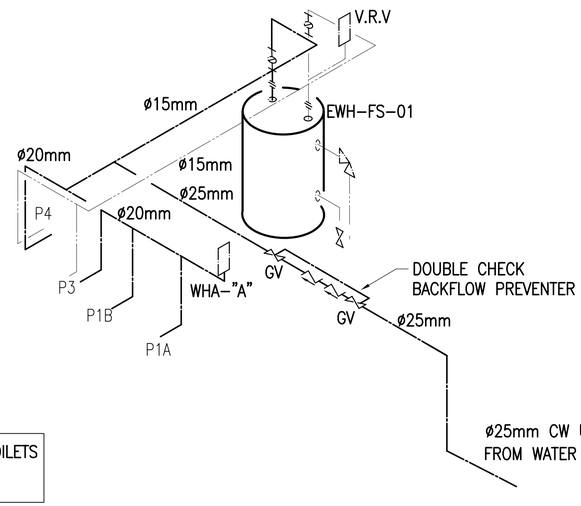

ALL HW AND CW DROPS IN TOILETS
ARE 15MM

PLUMBING WATER RISER

SCALE: NONE

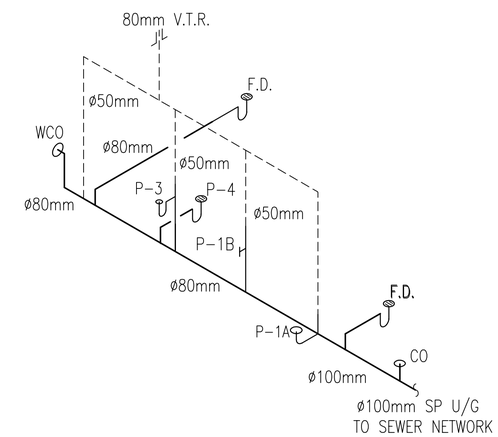

PLUMBING WASTE RISER

SCALE: NONE

UNLESS OTHERWISE NOTED, LINEAR DIMENSIONS
SHOWN ARE IN MILLIMETERS.

SYMBOL	DESCRIPTION	DATE	APV

Designed By:
Drawn By:
Checked By:
Date: -
File No. AF0707
I.S.O. Sheet File Name: AF0707DB-MP02IS.DWG
Solicitation Number: -

US Army Corps of Engineers Transatlantic Programs Center

ANA REGIONAL BRIGADE
PAKTIKA, AFGHANISTAN
INTERPRETER FACILITIES
MWR

PLUMBING RISER

SHEET REFERENCE NUMBER:
DB-MP-02

$DATE$
$FILE$

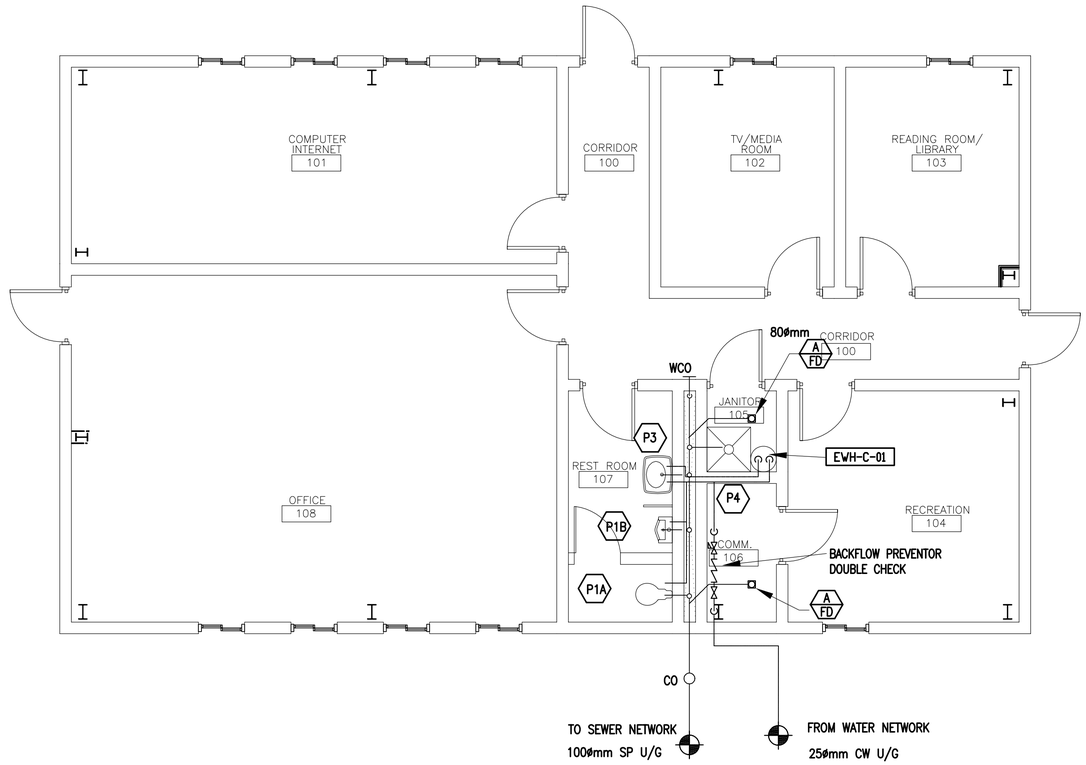

NOTES:

1. FOR PLUMBING LEGEND, ABBREVIATIONS, NOTES, AND STANDARD DETAILS SEE SHEETS CO-P-01 THRU CO-P-07.

1 0 1 2 3 4
1:50

PLUMBING FIXTURE SCHEDULE

FIX. No.	SYMBOL	FIXTURE NAME	PLUMBING FIXTURE SCHEDULE C.W. MM	C.W. (INCHES)	H.W. MM	H.W. (INCHES)	WASTE MM	WASTE (INCHES)	VENT MM	VENT (INCHES)	REMARKS
P1A		WESTERN WATER CLOSET (FLOOR OUTLET)	15	(1/2")	–	–	100	(4")	50	(2")	
P1B		WESTERN URINAL	15	(1/2")	–	–	80	(3")	50	(2")	
P3		LAVATORY (WALL HUNG)	15	(1/2")	15	(1/2")	40	(1 1/2")	40	(1 1/2")	
P4		JANITOR SINK (FLOOR MOUNT JANITOR TYPE)	15	(1/2")	15	(1/2")	50	(2")	40	(1 1/2")	

ELECTRIC WATER HEATER SCHEDULE

Ser No.	EWH Name	Capacity (Gallon)	Electrical Data	TEMPERATURE RISE	REMARKS
COMMUNITY CENTER					
30	EWH-C-01	20 gal.	6KW/1PH/220V/50HZ	90F (32C)	

WATER HEATER IS MOUNTED ON WALL OVER JANITOR'S SINK.

UNLESS OTHERWISE NOTED, LINEAR DIMENSIONS SHOWN ARE IN MILLIMETERS.

SYMBOL	DESCRIPTION	DATE	APR

Designed By:
Drawn By:
Date: 10 MAY 2007
File No. AF0707
Checked By:
I.S.O. Sheet File Name: AF0707DB-MP01PN.DWG
Solicitation Number: –

US Army Corps of Engineers Transatlantic Programs Center

ANA REGIONAL BRIGADE
PAKTIKA, AFGHANISTAN
INTERPRETER FACILITIES
MWR
PLUMBING PLAN

SHEET REFERENCE NUMBER:
DB-MP-01

$DATE$
$FILE$

D SIZE BORDER
32 X 20.5

PLUMBING LEGEND

SYMBOL	DESCRIPTION
AV	ANGLE VALVE
BV	BALL VALVE
CV	CHECK VALVE
	COCK VALVE
DV	DRAIN VALVE
P7	EMERGENCY SHOWER AND EYE-WASH
FCO	FLOOR CLEANOUT
FD	FLOOR DRAIN
FS	FLOOR SIPHON
P13	FLOOR SINK (FS)
	GALITRAP (GT)
GV	GATE VALVE
HB	HOSE BIBB, PLAN
	INSPECTION MANHOLE
	PIPE TURNING DOWN
	PIPE TURNING UP
CO	PLUG CLEANOUT
	REDUCER-INCREASER
	SUPPORT LOCATION
	Y-TYPE STRAINER
U	UNION
VRV	VACUUM RELIEF VALVE
WHA	WATER HAMMER ARRESTOR

ABBREVIATION	DESCRIPTION
AC	AIR COMPRESSOR
℄	CENTER LINE
CA	COMPRESSED AIR
COYB	CLEANOUT IN YARD BOX
CW	COLD WATER PIPES
DT	DAY TANK
FOR	FUEL OIL RETURN
FOS	FUEL OIL SUPPLY
FT	FLASH TANK
H/L	HIGH LEVEL
HW	HOT WATER PIPES
IC	INSPECTION CHAMBER
I.L	INVERT LEVEL
LD	LEAK DETECTOR
L/L	LOW LEVEL
LSH	LEVEL SWITCH HIGH
LSHH	LEVEL SWITCH HIGH HIGH
LSL	LEVEL SWITCH LOW
LSLL	LEVEL SWITCH LOW LOW
LT	LEVEL TRANSMITTER
OW	OILY WASTE
OWS	OIL WATER SEPARATOR
P	PUMP
RP	RECIRCULATION PUMP
YCO	YARD CLEAN OUT
WOT	WASTE OIL STORAGE TANK
NT	NEUTRALIZATION TANK
GS	GREASE INTERCEPTOR

ABBREVIATION	DESCRIPTION
SP	SOIL PIPE
SR	SHORT RADIUS
U.G.	UNDER GROUND
VP	VENT PIPE
V.R.V	VACUUM RELIEF VALVE
WCO	WALL CLEANOUT
WHA	WATER HAMMER ARRESTOR
WO	WASTE OIL
WP	WASTE PIPE

LINE STYLE	DESCRIPTION
	COLD WATER (CW)
	HOT WATER (HW)
	VENT PIPE (VP)
	SOIL PIPE (SP)
	WASTE PIPE (WS)

EQUIPMENT IDENTIFICATION

EWH-XX-XX
- ELECTRIC WATER HEATER
- UNIT NUMBER
- BUILDING ABBREVIATION

NOTES:

1. INTERIOR SOIL AND WASTE PIPING 80 (3") AND SMALLER SHALL BE ROUTED WITH A 2% SLOPE. INTERIOR SOIL AND WASTE PIPING 100 (4") AND LARGER SHALL BE ROUTED WITH A MINIMUM 1% SLOPE.
2. EXTERIOR SOIL OR WASTE PIPING SHALL BE ROUTED WITH A 2% SLOPE WHEREVER POSSIBLE, OTHERWISE A MINIMUM SLOPE OF 1% SHALL BE USED.
3. WATER AND DRAINAGE PIPING SHALL BE EXTENDED 1.5 m OUTSIDE THE BUILDING UNLESS OTHERWISE INDICATED

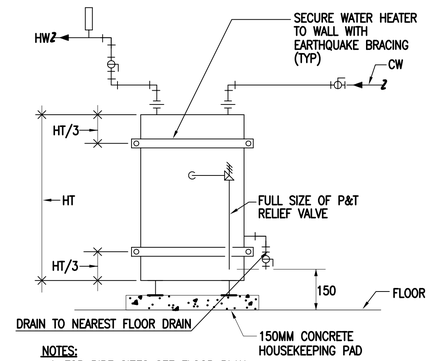

NOTES:
1-FOR PIPE SIZES SEE FLOOR PLAN.
2-FOR HEATER SELECTION SEE SCHEDULE TABLE AT DRAWING NO. (CO-P-01) AND SPECIFICATIONS.
3-SECURE WATER HEATER TO FLOOR WITH EXPANSION BOLTS, 20mm (3/4")MIN.

ELECTRIC WATER HEATER PIPING DETAIL

SCALE: N.T.S

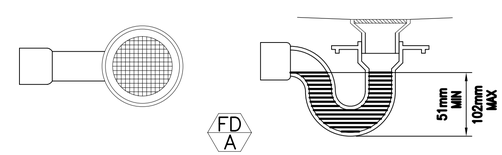

FLOOR DRAIN TYPE A

SCALE: N.T.S

UNLESS OTHERWISE NOTED, LINEAR DIMENSIONS SHOWN ARE IN MILLIMETERS.

SYMBOL	DESCRIPTION	DATE	APR

Date: 10 MAY 2007
File No. AF0707
I.S.D. Drawing File Name: AF0707DB-MP01GN.dwg
Solicitation Number: –
Designed By:
Drawn By:
Checked By:

US Army Corps of Engineers
Transatlantic Programs Center

ANA REGIONAL BRIGADE
PAKTIKA, AFGHANISTAN
INTERPRETER FACILITIES
MWR
PLUMBING LEGEND AND DETAILS
–

SHEET REFERENCE NUMBER:
DB-GP-01

$DATE$
$FILE$

D SIZE BORDER
32 X 20.5

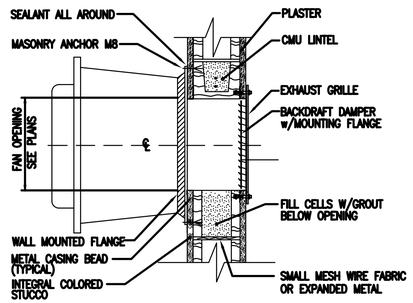

NOTES:-
* GASKET MATERIAL TO BE PROVIDED TO BOTTOM OF FAN INSIDE MOUNTING ANGLES.

1 WALL MOUNTED EXHAUST FAN INSTALLATION DETAIL

SCALE: N.T.S

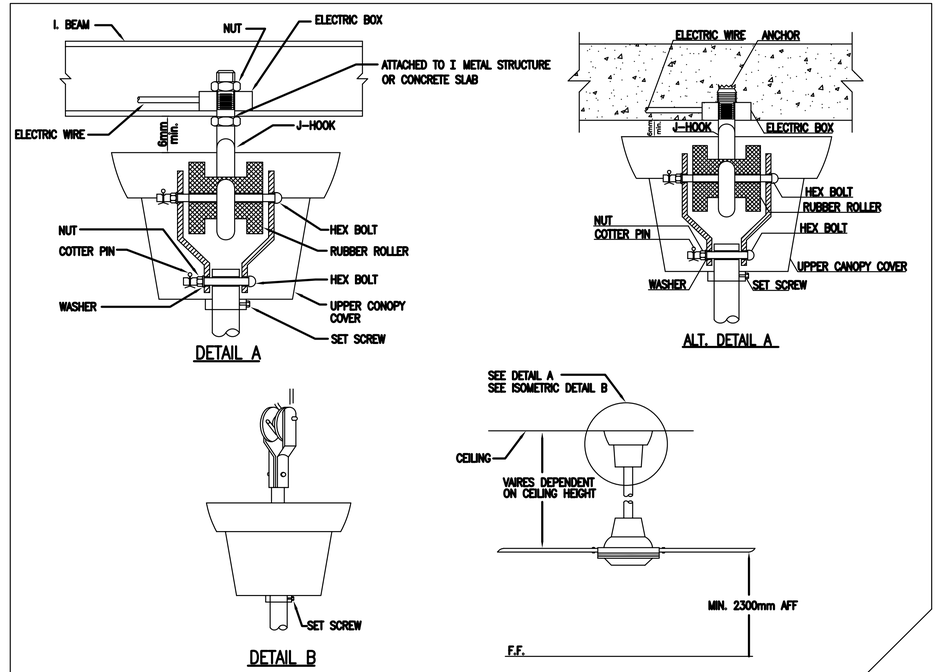

2 CEILING FAN MOUNTING DETAILS

SCALE: N.T.S

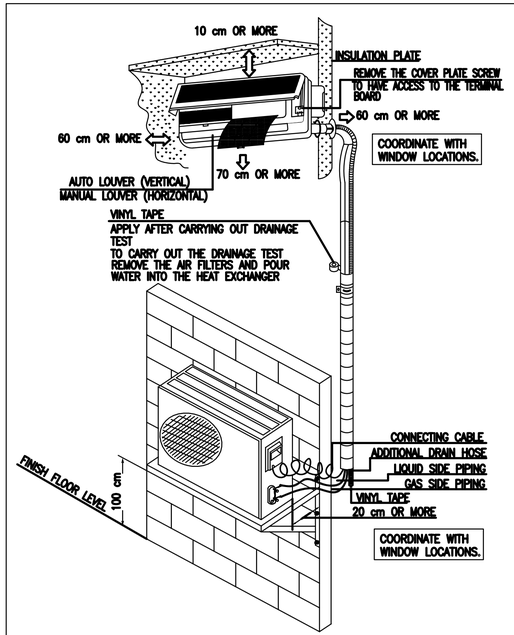

3 SPLIT UNIT INSTALLATION

SCALE: N.T.S

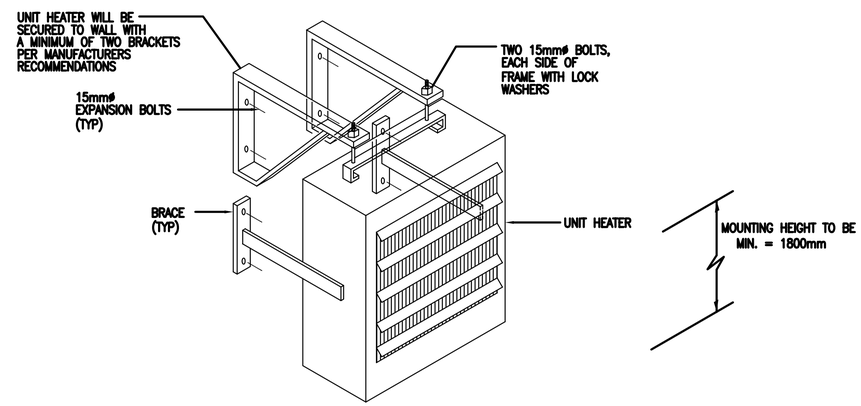

5 ELECTRIC WALL MOUNTED UNIT HEATER DETAIL

SCALE: N.T.S

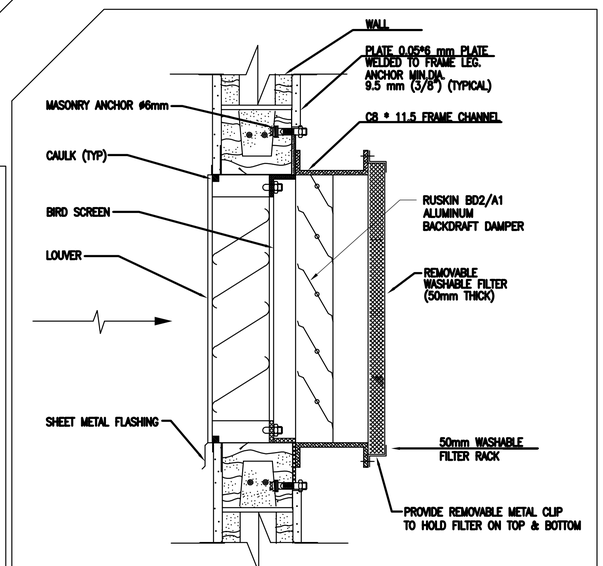

4 WASHABLE FILTER LOUVER DETAILS

SCALE: N.T.S

UNLESS OTHERWISE NOTED, LINEAR DIMENSIONS SHOWN ARE IN MILLIMETERS.

SYMBOL	DESCRIPTION	DATE	APR

Designed By:
Drawn By:
Checked By:
Date: 10 MAY 2007
File No: AF0707
U.S.D. Sheet File Name: AF0707DB-MH02GN.dwg
Solicitation Number: —

US Army Corps of Engineers Transatlantic Programs Center

ANA REGIONAL BRIGADE
PAKTIKA, AFGHANISTAN
INTERPRETER FACILITIES
MWR
HVAC DETAILS
— —

SHEET REFERENCE NUMBER:
DB-DM-01

$DATE$
$FILE$

D SIZE BORDER
32 X 20.5

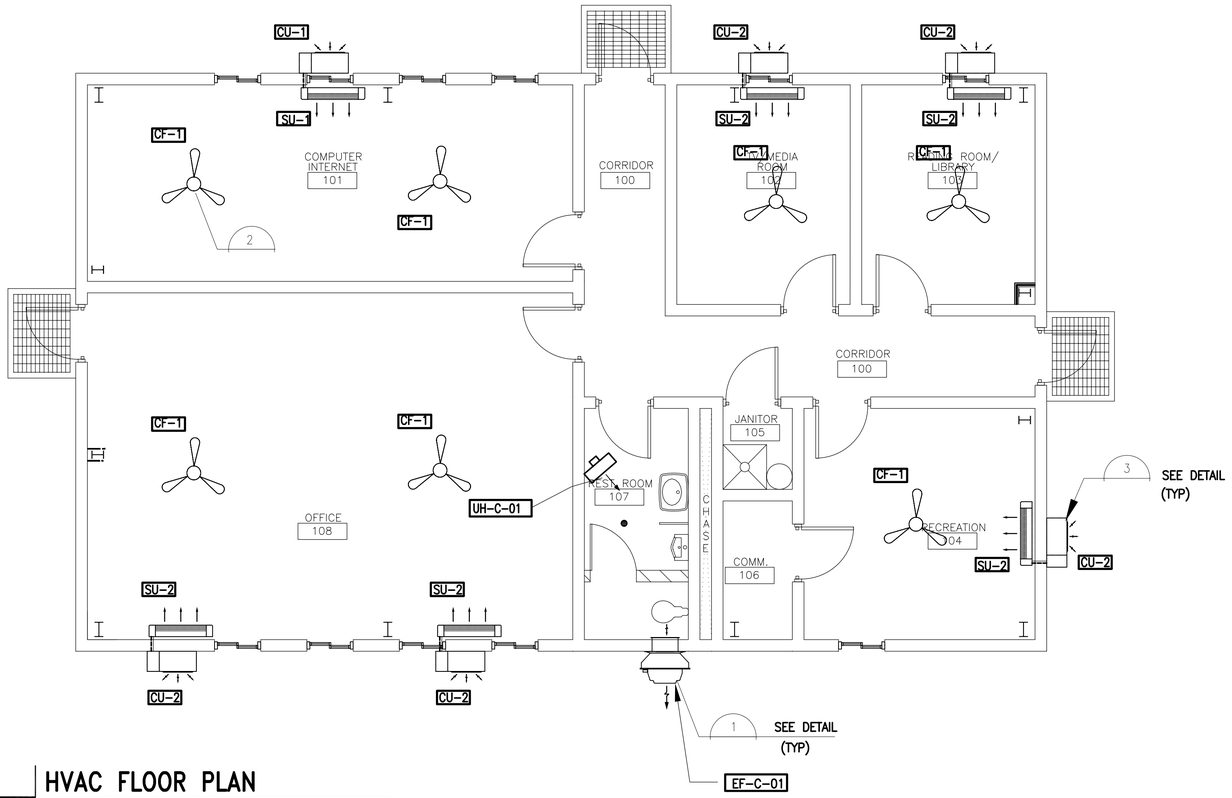

1 HVAC FLOOR PLAN

SCALE: 1:50

SPLIT SYSTEM AIR CONDITIONING UNIT SCHEDULE (SU) HEAT PUMP

UNIT NUMBER	COOLING CAPACITY TOTAL	AIR QUANTITY		ELECTRICAL DATA			HEATING CAPACITY 47 DEG F	ELECTRICAL CHARACTERISTICS		
	(BTUH)	CMH	CFM	VOLTS	PHASE	HERTZ	(BTUH)	INDOOR UNIT MCA	OUTDOOR UNIT MCA	ELECTRIC HEAT KW*
SU-1	12.000	520	305	220	1	50	12,800	1.2	12	2
SU-2	9,700	440	260	220	1	50	9,700	1.0	12	2

*WITH SUPPLEMENTAL HEAT

CONDENSING UNITS SCHEDULE (CU)

UNIT NUMBER	ELECTRICAL DATA			REMARKS
	VOLTS	PHASE	HERTZ	
CU-1	220	1	50	--
CU-2	220	1	50	--

CEILING FAN SCHEDULE (CF)

UNIT NUMBER	TYPE (NOTE 1)	FAN DIAMETER	MAX WATTS	ELECTRICAL DATA			REMARKS
				VOLTS	PHASE	HERTZ	
CF-1	WITH LIGHT	48 in	100	220	1	50	3-SPEED

NOTES:- 1- WITH LIGHT FIXTURE - (2) 13 WATT FLOURESCENT BULBS
2- BOTTOM OF FAN MOUNTING HEIGHT = MINIMUM 2500mm A.F.F
3- PROVIDE WITH REMOTE WALL MOUNTED, SWITCH LOCATED ADJACENT TO THERMOSTAT. SWITCH TO CONTROL FAN AND LIGHTS SEPERATELY.

EXHAUST FAN SCHEDULE (EF)

UNIT NUMBER	SERVICE	TYPE	AIR QUANTITY		MINIMUM WHEEL DIAMETER		FAN	STATIC PRESSURE		ELECTRICAL DATA				TEMP CONTROL DIAGRAM	INTERLOCK WITH	DRIVE TYPE	REMARKS
			CMH	CFM	MM	INCHES	RPM	mmH2O	IN W.G.	H.P.	VOLTS	PHASE	HERTZ				
EF-C-01	VENT	W-CTFG-GP	150	100	NA	NA	1050	2.54	0.1	1/25	220	1	50	NONE	SWITCH	DIRECT	NOTES 1, 2

MANUFACTURER SHALL PROVIDE NECESSARY TRANSFORMERS ON ALL UNITS TO MEET ELECTRICAL REQUIREMENT.
NOTE 1. SUPPLIED WITH BACKDRAFT DAMPER
NOTE 2. ALL EXHAUST FANS WITH SINGLE PHASE POWER ARE TO BE PROVIDED w/ A FACTORY MOUNTED DISCONNECT SWITCH.

FAN SCHEDULE TYPE - LEGEND
(REF. EXHAUST AND SUPPLY FAN SCHEDULES)
R-CTFG-GP

R =ROOF
W =WALL
IL =INLINE
CL =CEILING

GP = GENERAL PURPOSE
EP = EXPLOSION PROOF
DB = DOWN BLAST
UB = UP BLAST
UT = UTILITY SET

CTFG = CENTRIFUGAL
PROP = PROPELLER
TUBA = TUBE AXIAL

ELECTRIC UNIT HEATER

MARK		UH-C-1
CAPACITY (KW)		2
HEATING CAPACITY TOTAL (BTUH)		6828
CMH/THROW		500/3
LOCATION		TOILET
ELECTRICAL DATA	VOLTS	220
	PHASE	1
	HERTZ	50
TOTAL NUMBER		1

REMARKS: CONTROLLED BY MANUFACTURER'S THERMOSTAT MOUNTED 1500 A.F.F. UNDER HEATER.

UNLESS OTHERWISE NOTED, LINEAR DIMENSIONS SHOWN ARE IN MILLIMETERS.

SYMBOL	DESCRIPTION	DATE	APPR

Designed By:
Drawn By:
Checked By:
Date: 10 MAY 2007
File No. AF0707
I.S.O. Sheet File Name: AF0707DB-MH01PN.DWG
Solicitation Number: -

US Army Corps of Engineers Transatlantic Programs Center

ANA REGIONAL BRIGADE
PAKTIKA, AFGHANISTAN
INTERPRETER FACILITIES
MWR
SMALL COMMUNITY CENTER
HVAC PLAN

SHEET REFERENCE NUMBER:
DB-MH-01

$DATE$
$FILE$

D SIZE BORDER
32 X 20.5

ABBREVIATIONS

ABV. CLG	:–	ABOVE CEILING
AFF	:–	ABOVE FINISH FLOOR
AHU	:–	AIR HANDLING UNIT
AMPS	:–	AMPERES
B.D	:–	BACKDRAFT DAMPER
B.H	:–	BASE BOARD HEATER
B.M.O	:–	BELL MOUTH OPENING
BOP	:–	BOTTOM OF PIPE
BTU/H	:–	BRITISH THERMAL UNITS PER HOUR
CD	:–	CONDENSATE DRAIN
CF	:–	CEILING FAN
C.F.M	:–	CUBIC FEET PER MINUTE
C.M.H	:–	CUBIC METER PER HOUR
CONN	:–	CONNECTION
CORR	:–	CORRUGATED
CU	:–	CONDENSING UNIT
DB	:–	DRY BULB
DH	:–	DIESEL UNIT HEATER
DIA	:–	DIAMETER
D.L	:–	DOOR LOUVER
DT	:–	DAY TANK
DWG	:–	DRAWING
EF	:–	EXHAUST FAN
EL	:–	EXHAUST LOUVER
ENT	:–	ENTERING
EXH.G	:–	EXHAUST GRILLE
EXT	:–	EXTERNAL
F.A.D	:–	FRESH AIR DUCT
FD	:–	FIRE DAMPER
FLA	:–	FULL LOAD AMPERES
FOR	:–	FUEL OIL RETURN
FO	:–	FUEL OIL
FOS	:–	FUEL OIL SUPPLY
FPM	:–	FEET PER MINUTE
FT	:–	FEET
GALV	:–	GALVANIZED
HP	:–	HORSE POWER
KW	:–	KILO WATTS
LD	:–	LEAK DETECTOR
L/S	:–	LITERS PER SECOND
LT	:–	LEVEL TRANSMITTER

ABBREVIATIONS

LVG	:–	LEAVING
MRAD	:–	MOTORIZED RETURN (RECIRCULATION)
MAID	:–	MOTORIZED AIR INTAKE DAMPER
MEAD	:–	MOTORIZED EXHAUST AIR DAMPER
M.D	:–	MOTORIZED DAMPER
mm	:–	MILLIMETERS
MPS	:–	METERS PER SECOND
NC	:–	NORMALLY CLOSED
NO	:–	NORMALLY OPEN
OC	:–	ON CENTERS
OSA	:–	OUTSIDE AIR
P	:–	PUMP
PACU	:–	PACKAGE AIR CONDITIONING UNIT
P.S	:–	POWER SUPPLY
R.C.D	:–	RETURN CEILING DIFFUSER
R.D	:–	RETURN AIR DUCT
RED	:–	REDUCTION/REDUCER
R.G	:–	RETURN GRILLE
RPM	:–	REVOLUTIONS PER MINUTE
RS	:–	REFRIGERANT SUCTION
RL	:–	REFRIGERANT LIQUID
S.C.D	:–	SUPPLY CEILING DIFFUSER
S.D	:–	SUPPLY DUCT
SF	:–	SUPPLY FAN
S.G	:–	SUPPLY GRILLE
SM.D	:–	SMOKE DETECTOR
SP	:–	STATIC PRESSURE
SQ	:–	SQUARE
SR	:–	SHORT RADIUS
S.R–X	:–	SUPPLY REGISTER TYPE–X
SS	:–	STAINLESS STEEL
SU	:–	SPLIT UNIT
T	:–	SPACE THERMOSTAT
T.G	:–	TRANSFER GRILLE
TOS	:–	TOP OF SUPPORT
TYP	:–	TYPICAL
U.C	:–	UNDER CUT
UH	:–	UNIT HEATER
V.D	:–	VOLUME DAMPER
WB	:–	WET BULB
WG	:–	WATER GAGE

NOTES:

1– ALL DIMENSIONS ARE IN MM UNLESS OTHERWISE NOTED.

2– DUCT DIMENSION INDICATES INSIDE DIMENSIONS.

3– EXACT LOCATIONS OF POWER SUPPLY POINTS, CONTROL PANEL AND MOTOR SWITCH TO BE TAKEN FROM ELECTRICAL DESIGN DRAWINGS.

4– THERMOSTAT HEIGHT IS 1525mm ABOVE F.F.L.

5– ALL EXTERIOR SUPPLY DUCTS WILL BE INSULATED WITH 50 mm THICK. MINERAL FIBER AND SHALL BE COVERED WITH METAL CLADDING.

6– ALL MENTIONED HEIGHTS ARE MEASURED FROM F.F.L.

7– INSULATE ALL THE SUPPLY DUCT WITH 50mm(2") INSULATION THICKNESS, 16kg/m³ FIBERGLASS.

SYMBOLS

:– SWITCH

:– THERMOSTAT

:– TEMPERATURE SENSOR

:– MOTORIZED DAMPER

:– CARBON MONOXIDE SENSOR

:– CEILING FAN

:– THRU WALL EXHAUST FAN

:– BASE BOARD HEATER

:– UNIT HEATER

:– DIESEL UNIT HEATER

:– OUTSIDE INTAKE LOUVER

:– GRAVITY RIDGE VENT

:– EXHAUST ROOF FAN

:– SUPPLY ROOF FAN

:– SPLIT UNIT

:– CONDENSING UNIT

:– FINISH FLOOR LEVEL IN (m) MEASURED FROM REFRENCE +0.00 LEVEL

:– SUPPLY SECTION FAN

:– FIRE DAMPER

:– VOLUME DAMPER

:– DOOR LOUVER

:– UNDER CUT

EQUIPMENT IDENTIFICATION

XX–XX–XX

- UNIT NUMBER
- BUILDING ABBREVIATION
- EQUIPMENT TYPE

DUCTWORK

SUPPLY AIR DIFFUSER – ARROWS INDICATE PATTERN. NO PATTERN SHOWN EQUALS 4–WAY.

RETURN AIR GRILLE

EXHAUST GRILLE

SUPPLY AIR SLOT

RETURN AIR SLOT

ROUND DUCTWORK. DIAMETER INDICATED IN MILLIMETER

RECTANGULAR DUCTWORK. SIZE INDICATED IN INCHES, FIRST NUMBER IS SIDE SHOWN.

FLEXIBLE DUCT

SUPPLY OR OUTSIDE AIR DUCT

RETURN AIR DUCT.

RELIEF OR EXHAUST AIR DUCT.

90 DEGREE DUCTWORK ELBOW.

RADIUS DUCTWORK ELBOW – ROUND OR RECTANGULAR.

RECTANGULAR DUCTWORK BRANCH TAKE–OFF WITH 45 DEGREE BRANCH INLET.

FLARED SPIN–IN WITH DAMPER AND FLEX DUCT (DIFFUSER CONNECTION).

ROUND DUCT BRANCH TAKE–OFF FROM RECTANGULAR MAIN WITH CONICAL TAP.

DUCTWORK SIZE TRANSITION.

DUCT PRESSURE CLASS. POINT OF CHANGE IN DUCT CONSTRUCTION.

FLEXIBLE DUCT CONNECTION

SUPPLY OR OUTSIDE AIR DUCT UP

SUPPLY OR OUTSIDE AIR DUCT DOWN

RETURN AIR DUCT UP

RETURN AIR DUCT DOWN

RELIEF OR EXHAUST AIR DUCT UP

RELIEF OR EXHAUST AIR DUCT DOWN

IN–LINE 90 DEGREE DROP (RISE) IN DUCT

INCLINED RISE IN DUCT

INCLINED DROP IN DUCT

TURNING VANES

DUCT EXTRACTOR

SPLITTER DAMPER

ACCESS DOOR

UNLESS OTHERWISE NOTED, LINEAR DIMENSIONS SHOWN ARE IN MILLIMETERS.

SYMBOL	DESCRIPTION	DATE	APR

Designed By:
Drawn By:
Date: 10 MAY 2007
File No: AF0707
Checked By:
U.S.D. Sheet File Name: AF0707DB–MH01GN.dwg
Solicitation Number: –

US Army Corps of Engineers Transatlantic Programs Center

ANA REGIONAL BRIGADE
PAKTIKA, AFGHANISTAN
INTERPRETER FACILITIES
MWR
HVAC LEGEND – –

SHEET REFERENCE NUMBER:
DB–GM–01

$DATE$
$FILE$

D SIZE BORDER
32 X 20.5

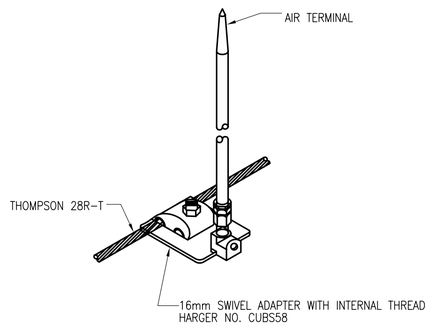

1 AIR TERMINAL MOUNTING DETAIL

SCALE: N.T.S

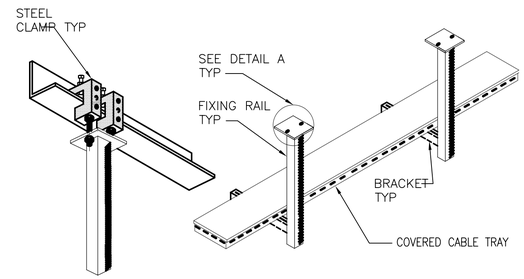

DETAIL# A

2 CABLE TRAY SUPPORT DETAIL

SCALE: N.T.S

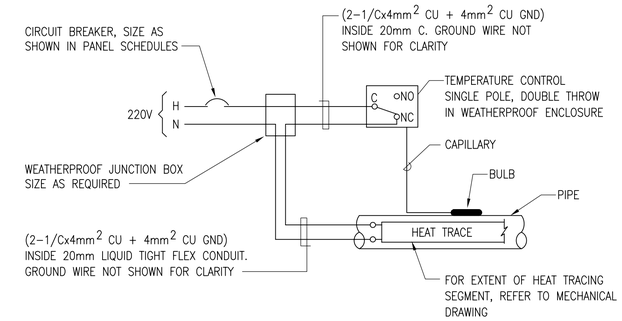

3 HEAT TRACE CONTROL DIAGRAM

SCALE: N.T.S

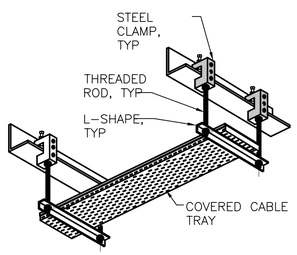

4 CABLE TRAY SUPPORT DETAIL

SCALE: N.T.S

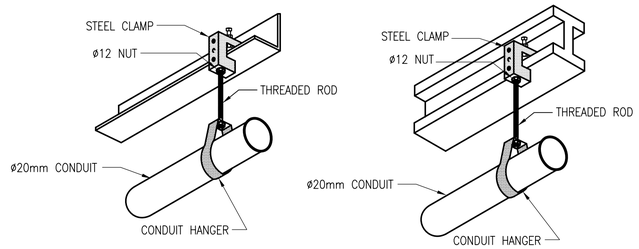

5 SUPPORT OF CONDUIT FROM STEEL STRUCTURE

SCALE: N.T.S

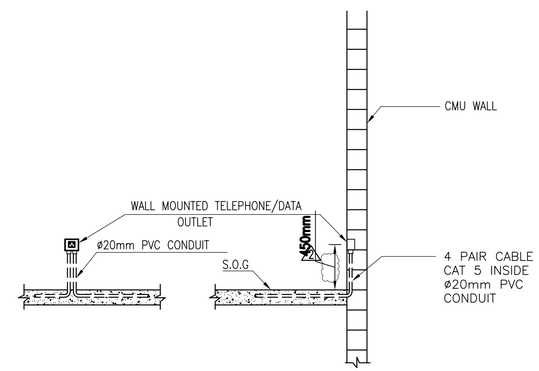

6 GENERAL INSTALLATION DETAIL FOR RECESSED TELEPHONE/ DATA OUTLET (CONDUIT EMBEDDED IN SLAB)

SCALE: N.T.S

UNLESS OTHERWISE NOTED, LINEAR DIMENSIONS SHOWN ARE IN MILLIMETERS.

SYMBOL	DESCRIPTION	DATE	APP.

Designed By:
Drawn By:
Checked By:
Date: 10 MAY 2007
File No. AF0707
I.S.O. Sheet File Name: AF0707DB-EL03DT.dwg
Solicitation Number: –

US Army Corps of Engineers Transatlantic Programs Center

ANA REGIONAL BRIGADE
PAKTIKA, AFGHANISTAN
INTERPRETER FACILITIES
MWR
ELECTRICAL DETAILS

SHEET REFERENCE NUMBER:
DB-DE-03

$DATE$
$FILE$

LIGHTING FIXTURE SCHEDULE

TYPE	DESCRIPTION	NO. OF LAMPS	LAMP TYPE	WATTS PER LAMP	VOLTAGE	MOUNTING
A	PENDANT MOUNTED INDUSTRIAL FLUORESCENT LIGHT FIXTURE WITH WIDE DISTRIBUTION REFLECTOR KIT	2	T8	36	220/50HZ	PENDANT
A1	SURFACE MOUNTED INDUSTRIAL FLUORESCENT LIGHT FIXTURE WITH WIDE DISTRIBUTION REFLECTOR KIT	2	T8	36	220/50HZ	SURFACE
B	SURFACE/PENDANT MOUNTED PRISTMIC REFLECTOR	2	T8	36	220/50HZ	SURFACE/PENDENT
B1	SURFACE MOUNTED VIRTUALLY UNBREAKABLE DIFFUSER, SOLID STEEL BODY AND FRAME, HIGH SECURITY STAINLESS BOLTS	2	T8	36	220/50HZ	SURFACE/PENDENT
C	PENDANT MOUNTED FLUORESCENT LIGHT FIXTURE WITH REFLECTOR AND ACRYLIC LENS	4	T8	36	220/50HZ	PENDANT
C1	SURFACE MOUNTED FLUORESCENT LIGHT FIXTURE WITH REFLECTOR AND ACRYLIC LENS	4	T8	36	220/50HZ	SURFACE
D	SURFACE/PENDANT MOUNTED FIXTURE SPECIAL FOR WET LOCATION	2	T8	40	220/50HZ	SURFACE
E	SURFACE/WALL MOUNTED FIXTURE SPECIAL FOR WET LOCATION	2	T8	36	220/50HZ	SURFACE OR WALL
F	WALL MOUNTED COMPACT FLUOR.	1	CF	26	220/50HZ	WALL
G	PENDANT MOUNTED INDUSTRIAL LOW BAY FIXTURE	1	HPS	150	220/50HZ	PENDANT
G1	PENDANT MOUNTED INDUSTRIAL HIGH BAY FIXTURE	1	HPS	150	220/50HZ	PENDANT
G2	PENDANT MOUNTED INDUSTRIAL LOW BAY FIXTURE	1	HPS	250	220/50HZ	PENDANT
J	EXPLOSION PROOF SURFACE MOUNTED FLUOR. FIXTURE	2	INCLUDED	36	220/50HZ	SURFACE
X1	EXIT SIGN WITH DIRECTIONAL ARROWS AS REQUIRED	2	INCLUDED	8	220/50HZ	UNIVERSAL
X2	EMERGENCY FIXTURE WITH HALOGEN LAMPS	2	HALOGEN	20	220/50HZ	WALL/SURFACE
X3	EXPLOSION PROOF EMERGENCY FIXTURE WITH HALOGEN LAMPS	2	HALOGEN	14	220/50HZ	WALL/SURFACE

BRANCH CIRCUITS WIRE SCHEDULE

220 VOLT 1ø, 3W. CIRCUITS

CIRCUIT BREAKER	CONDUCTOR
20A–1P	2 #4mm² & 1 #4mm² GND. – 20mm C.
30A–1P	2 #6mm² & 1 #6mm² GND. – 20mm C.
40A–1P	2 #10mm² & 1 #6mm² GND. – 20mm C.
50A–1P	2 #16mm² & 1 #6mm² GND. – 25mm C.
60A–1P	2 #25mm² & 1 #10mm² GND. – 25mm C.
80A–1P	2 #35mm² & 1 #10mm² GND. – 25mm C.
100A–1P	2 #50mm² & 1 #10mm² GND. – 32mm C.

380 VOLT, 3ø, 4W. CIRCUITS

20A–3P	3 #4mm² & 1 #4mm² GND. – 20mm C.
30A–3P	3 #6mm² & 1 #6mm² GND. – 20mm C.
40A–3P	3 #10mm² & 1 #6mm² GND. – 20mm C.
50A–3P	3 #16mm² & 1 #6mm² GND. – 38mm C.
60A–3P	3 #25mm² & 1 #10mm² GND. – 38mm C.
80A–3P	3 #35mm² & 1 #10mm² GND.–38mmC.
100A–3P	3 #50mm² & 1 #10mm² GND.–40mmC.

380 VOLT, 3ø,5W. CIRCUITS

20A–3P	4 #4mm² & 1 #4mm² GND. – 20mm C.
30A–3P	4 #6mm² & 1 #6mm² GND. – 20mm C.
40A–3P	4 #10mm² & 1 #6mm² GND. – 32mm C.
50A–3P	4 #16mm² & 1 #6mm² GND. – 38mm C.
60A–3P	4 #25mm² & 1 #10mm² GND. – 38mm C.

NOTE:

1. TYPE MC CABLE SHALL INCLUDE FULL SIZE INSULATED GROUND CONDUCTOR. SIZES AS INDICATED IN SCHEDULE.

UNLESS OTHERWISE NOTED, LINEAR DIMENSIONS SHOWN ARE IN MILLIMETERS.

SYMBOL	DESCRIPTION	DATE	APR

Date: 10 MAY 2007
File No. AF0707
I.S.O. Sheet File Name: AF0707DB-EL02GN.dwg
Solicitation Number: –
Designed By:
Drawn By:
Checked By:

US Army Corps of Engineers Transatlantic Programs Center

ANA REGIONAL BRIGADE
PAKTIKA, AFGHANISTAN
INTERPRETER FACILITIES
MWR
ELECTRICAL
FIXTURE SCHEDULE
AND BRANCH CIRCUIT

SHEET REFERENCE NUMBER:
DB–GE–02

$DATE$
$FILE$

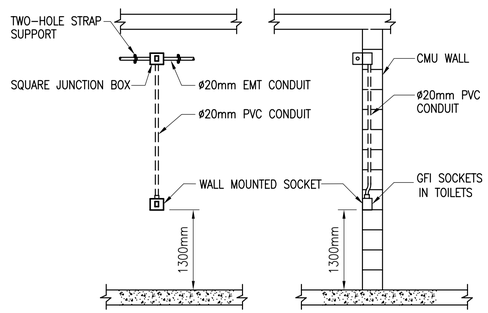

1 GENERAL INSTALLATION DETAIL FOR RECESSED SURFACE MOUNTED SOCKET IN TOILETS

SCALE: N.T.S

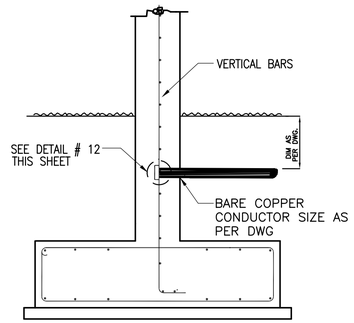

2 TYPICAL STRUCTURAL BONDING DETAIL

SCALE: N.T.S

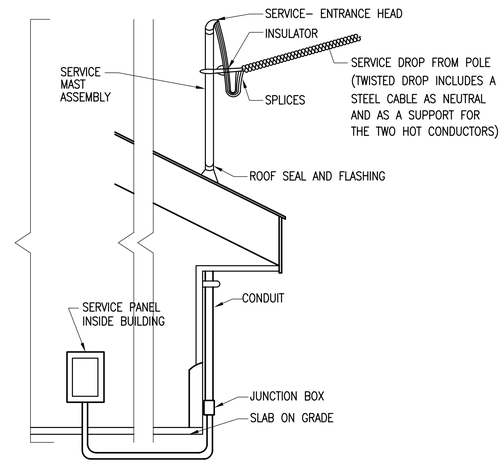

3 PANEL BOARD FEEDING FROM BOTTOM (FOR PANELS NOT IN EXTERIOR WALL)

SCALE: N.T.S.

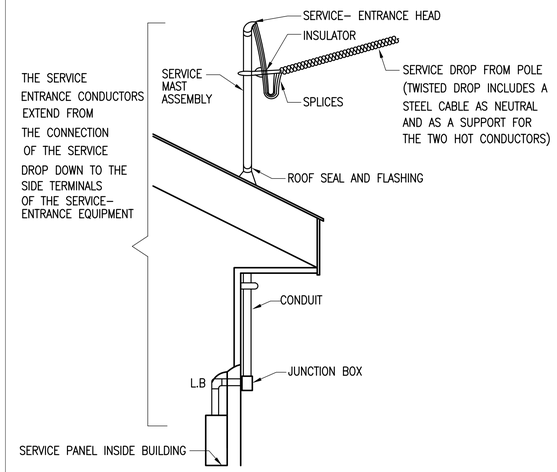

4 PANEL BOARD FEEDING FROM TOP (FOR PANELS ON EXTERLOR WALL)

SCALE: N.T.S.

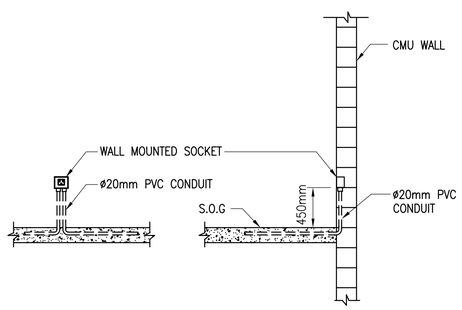

5 GENERAL INSTALLATION DETAIL FOR RECESSED SOCKET (CONDUIT EMBEDDED IN SLAB)

SCALE: N.T.S

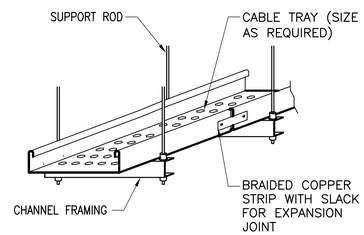

6 CABLE TRAY CROSSING EXPANSION JOINT

SCALE: N.T.S

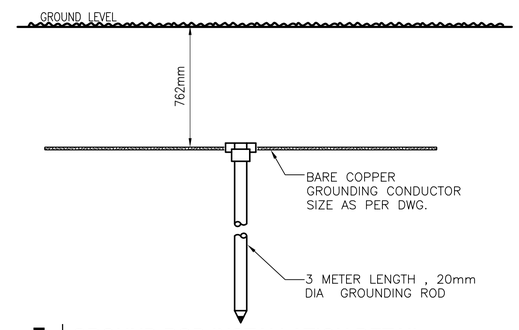

7 GROUND ROD INSTALLATION DETAIL

SCALE: N.T.S

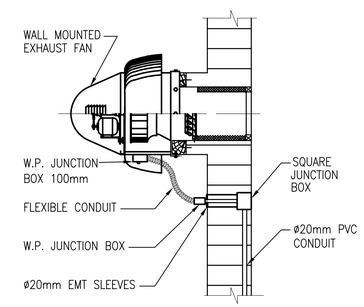

8 GENERAL INSTALLATION DETAIL FOR EXHAUST FAN (CONDUIT EMBEDDED)

SCALE: N.T.S

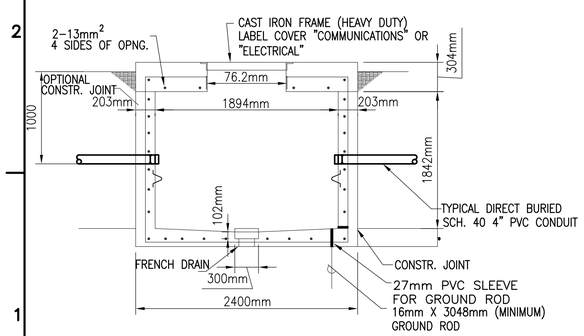

9 MANHOLE DETAIL (2400x2400mm)

SCALE: N.T.S.

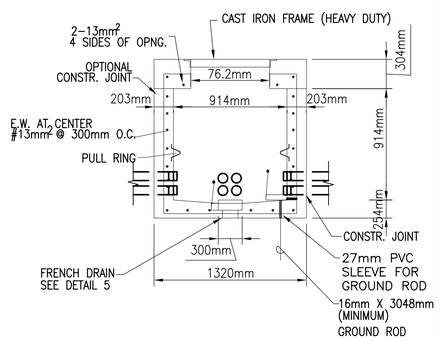

10 HAND HOLE DETAIL (1320x1320mm)

SCALE: N.T.S.

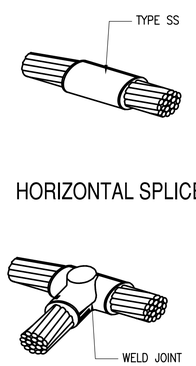

11 T-CONNECTION WELDING POINT

SCALE: N.T.S.

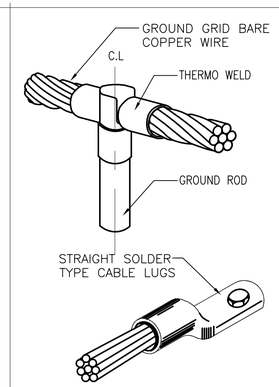

12 GROUNDING CABLE LUGS

SCALE: N.T.S.

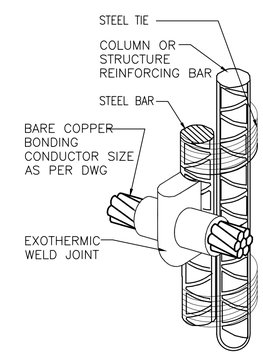

13 WELDING TO STEEL REINFORCING BAR

SCALE: N.T.S.

UNLESS OTHERWISE NOTED, LINEAR DIMENSIONS SHOWN ARE IN MILLIMETERS.

SYMBOL	DESCRIPTION	DATE	APP.

Date: 10 MAY 2007
File No. AF0707
I.S.O. Sheet File Name: AF0707DB-EL02DT.dwg
Solicitation Number: –
Designed By:
Drawn By:
Checked By:

US Army Corps of Engineers Transatlantic Programs Center

ANA REGIONAL BRIGADE
PAKTIKA, AFGHANISTAN
INTERPRETER FACILITIES
MWR
ELECTRICAL DETAILS

SHEET REFERENCE NUMBER:
DB-DE-02

$DATE$
$FILE$

PANEL "PP" SCHEDULE

100 AMPS MAIN CIRCUIT BREAKER 380DELTA/220 VOLTS 3 PHASE 5 WIRE 10,000 AIC

MOUNTING: SURFACE

NO	DESCRIPTION	BKR/P	VA A		VA B		VA C		BKR/P	DESCRIPTION	NO
1	LIGHTS-100, 105-107, & EMERGENCY	20/1	552	200					20/1	LIGHTS/FANS - 101	2
3	LIGHTS/FANS - 102,103	20/1			200	100			20/1	LIGHTS/FANS - 104	4
5	LIGHTS/FANS - 108	20/1					200	1320	20/1	RECEPS - 101 & EXTERIOR	6
7	RECEPS - 101,108	20/1	1320	1320					20/1	RECEPS - 102,100	8
9	RECEPS - 103,100, & EXTERIOR	20/1			990	1650			40/1	RECEPS - 104 & EXTERIOR	10
11	RECEP - 105	20/1					1000	6000	20/1	WATER HEATER - 104	12
13	RECEP - 107	20/1	330	220					20/1	EXHAUST FAN - 106	14
15	RECEPS - 108	20/1			990	1650			20/1	RECEPS - 108 & EXTERIOR	16
17	SPLIT SYSTEM AC UNIT - 101	20/1					2900	2900	20/1	SPLIT SYSTEM AC UNIT - 102	18
19	SPLIT SYSTEM AC UNIT - 103	20/1	2900	2900					20/1	SPLIT SYSTEM AC UNIT - 104	20
21	SPLIT SYSTEM AC UNIT - 108	20/1			2900	2900			20/1	SPLIT SYSTEM AC UNIT - 108	22
23	FIRE DETECTION - 100-10103,106,107	20/1					880	2000	20/1	UNIT HEATER - 107	24
25	SPARE	20/1							20/1	SPARE	26
27	SPARE	20/1							20/1	SPARE	28
29	SPARE	20/1							20/1	SPARE	30
		TOTAL	9742		11380		17200				
CONNECTED KVA:		38.32 KVA									
CONNECTED AMPS		58.22 AMPS									

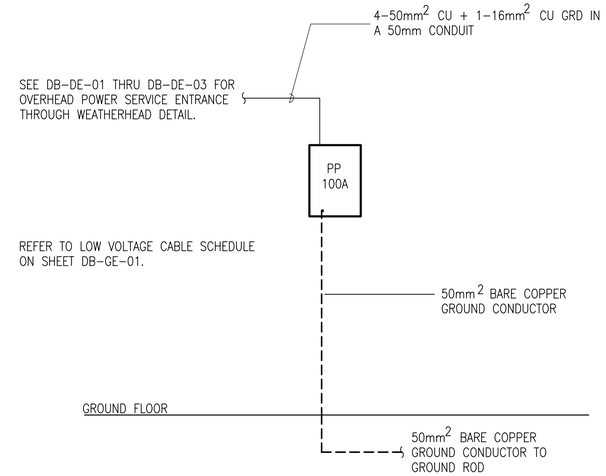

1 POWER RISER DIAGRAM

DB-SE-01 SCALE: N.T.S.

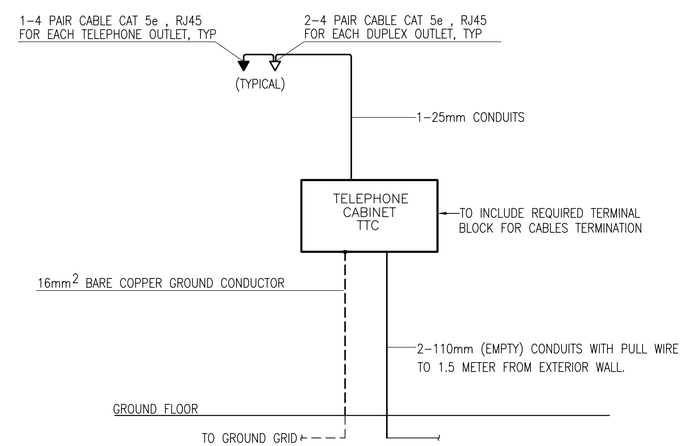

2 TELEPHONE RISER DIAGRAM

DB-SE-01 SCALE: N.T.S.

UNLESS OTHERWISE NOTED, LINEAR DIMENSIONS SHOWN ARE IN MILLIMETERS.

SYMBOL	DESCRIPTION	DATE	APP.

Designed By:
Drawn By:
Checked By:
Date: 10 MAY 2007
File No. AF0707
I.S.O. Sheet File Name: AF0707DB-EL01SC.dwg
Solicitation Number: –

US Army Corps of Engineers Transatlantic Programs Center

ANA REGIONAL BRIGADE
PAKTIKA, AFGHANISTAN
INTERPRETER FACILITIES
MWR
ELECTRICAL
PANEL SCHEDULE & RISERS

SHEET REFERENCE NUMBER:
DB-SE-01

$DATE$
$FILE$

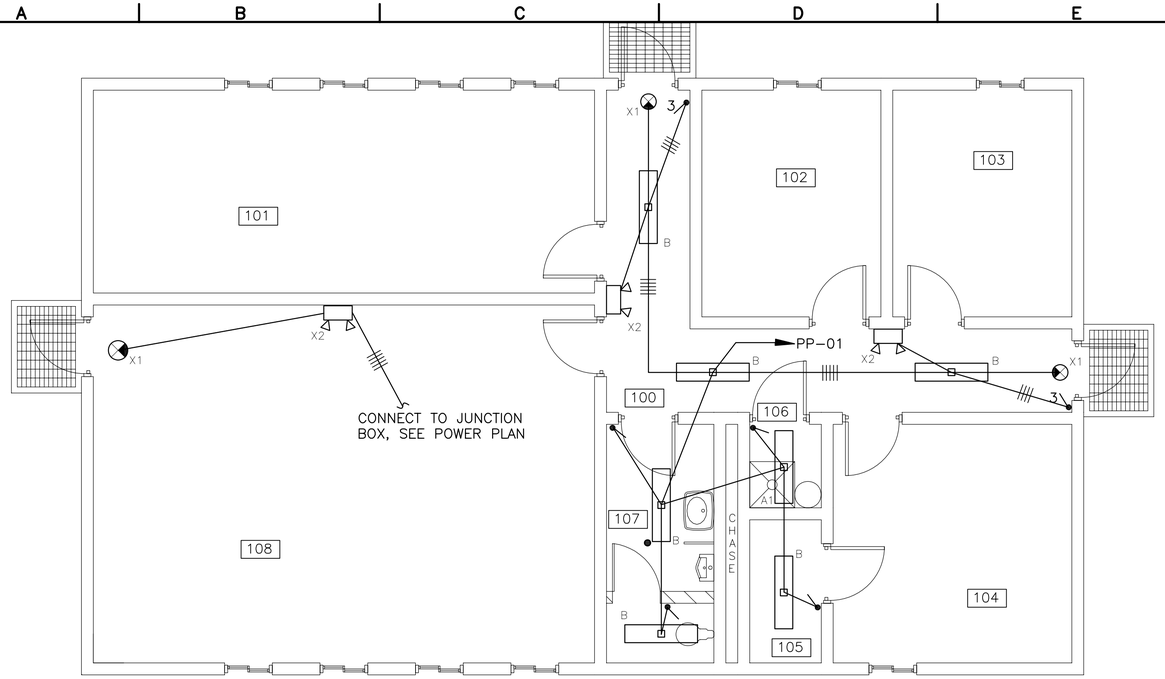

1 ELECTRICAL LIGHTING PLAN

DB-E-01 SCALE: 1:50

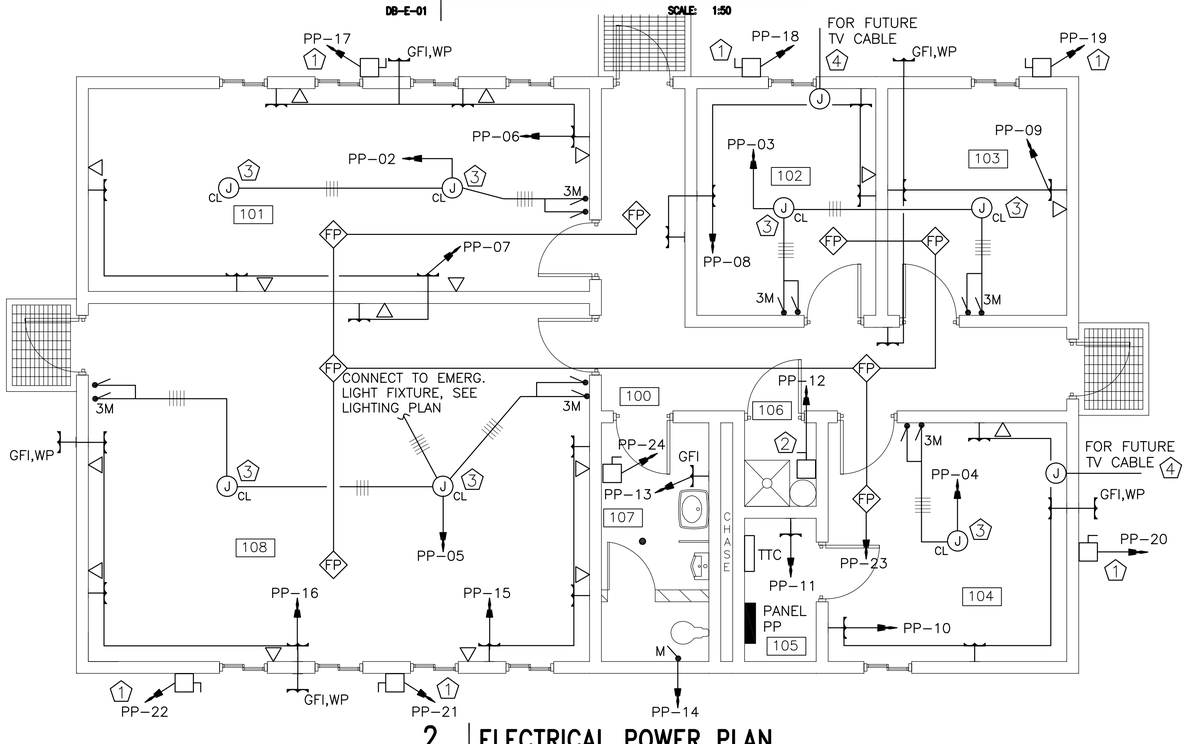

2 ELECTRICAL POWER PLAN

DB-E-01 SCALE: 1:50

NOTES:

SEE DB-GE-02 FOR BRANCH CIRCUITS WIRING SCHEDULE WITH CONDUIT SIZES.

1. PROVIDE 1P, 20A, 220V NONFUSED DISCONNECT IN NEMA TYPE 4X ENCLOSURE.
2. PROVIDE 1P, 40A, 220V NONFUSED DISCONNECT IN NEMA TYPE 1 ENCLOSURE.
3. J-BOX FOR CEILING FAN/LIGHT FIXTURE. SEE MECHANICAL SCHEDULES AND DETAILS.
4. EXTEND 13MM CONDUIT 1.5M OUTSIDE OF BLDG., 305MM BELOW GRADE.

1000 0 1000mm
SCALE: 1 = 50

UNLESS OTHERWISE NOTED, LINEAR DIMENSIONS SHOWN ARE IN MILLIMETERS.

SYMBOL	DESCRIPTION	DATE	APP.

Designed By:
Drawn By:
Checked By:
Date: 10 MAY 2007
File No. AF0707
T.S.O. Sheet File Name: AF0707DB-EL01PN.dwg
Solicitation Number: –

US Army Corps of Engineers Transatlantic Programs Center

ANA REGIONAL BRIGADE
PAKTIKA, AFGHANISTAN
INTERPRETER FACILITIES
MWR
ELECTRICAL
LIGHTING & POWER PLAN

SHEET REFERENCE NUMBER:
DB-E-01

$DATE$
$FILE$

LIGHTING LEGEND:

	ONE LAMP FLUORESCENT L.F.
	TWO LAMPS FLUORESCENT L.F.
	FOUR LAMPS FLUORESCENT L.F.
	FLOOD LIGHT, WALL MOUNTED
	6 METER, LIGHTING POLE WITH FLOOD LIGHT
	MIRROR WALL MOUNTED LIGHT FIXTURE
	WALL MOUNTED FIXTURE
	PENDANT MOUNTED INDUSTRIAL, LOW/HIGH BAY L.F.
X1	SURFACE (WALL/CELING)ONE FACE EXIT SIGN WITH BACK UP BATTERY.
X2	WALL MOUNTED EMERGENCY LIGHT WITH BACK UP BATTERY.
D	DIMMING SWITCH, 220V, 16AMP MOUNTED HEIGHT = 1300mm ABOVE FINISH FLOOR LEVEL FROM THE CENTER OF SWITCH
	ONE WAY SWITCH, 220V, 16AMP MOUNTED HEIGHT = 1300mm ABOVE FINISH FLOOR LEVEL FROM THE CENTER OF SWITCH
3	3 WAY SWITCH, 220V, 16AMP MOUNTED HEIGHT = 1300mm ABOVE FINISH FLOOR LEVEL FROM THE CENTER OF SWITCH
4	4 WAY SWITCH, 220V, 16AMP MOUNTED HEIGHT = 1300mm ABOVE FINISH FLOOR LEVEL FROM THE CENTER OF SWITCH

LOW CURRENT LEGEND:

TTC	TELEPHONE TERMINAL CABINET, SEE NOTE 3
	EQUIPMENT AS IDENTIFIED ON PLANS
	TELPHONE/DATA OUTLET DUPLEX, RJ-45, 4 PAIR CATEGORY 5E, SEE NOTE 2 & 5
FP	FIRE ALARM BOX FOR FUTURE INSTALLATION OF SELF SMOKE DETECTOR. LOCATE BOX A MIN. OF 1.0M FROM TIP OF FAN BLADE.
	TELEPHONE OUTLET ,RJ-45,4 PAIR CATEGORY 5E, SEE NOTE #2, 5

GROUNDING LEGEND:

	3 METER LENGTH, 0.02m DIAMETER , COPPER GROUNDING ROD
	UNDERGROUND BARE COPPER CONDUCTOR FOR CONNECTION BETWEEN GROUNDING RODS SIZE AS INDICATED ON THE PLAN
T	T-SPLICE EXOTHERMIC WELD
	AIR TERMINAL

POWER LEGEND:

	ELECTRICAL PANEL BOARD, SEE NOTE 4
MDP	MAIN DISTRIBUTION PANEL (MDP)
	NON FUSED DISCONNECT SWITCH ,220V ,50HZ ,20A (U.O.N)
	COMBINATION MOTOR STARTER SWITCH ,220V ,50HZ ,20A (U.O.N)
M	MANUAL MOTOR STARTER, WITH OVER LOAD PROTECTION RATING AS REQUIRED BY EXHAUST FAN MANUFACTURER MOUNTED HEIGHT = 1300mm ABOVE FINISH FLOOR LEVEL
3M	MOTOR RATED 3-SPEED SWITCH FOR CEILING FAN, 220V, 20AMP MOUNTED HEIGHT = 1300mm ABOVE FINISH FLOOR LEVEL
	RECESSED MOUNTED DUPLEX RECEPTACLES 1PH, 240V, 16A, 50HZ GROUNDING DIN TYPE. MOUNTING HEIGHT = 450mm ABOVE FINISH FLOOR LEVEL
GFI	RECESSED MOUNTED SINGLE RECEPTACLES 1PH, 240V, 16A, 50HZ GROUNDING DIN TYPE WITH GROUND FAULT INTERRUPTER AND SWITCH. MOUNTING HEIGHT =1300mm ABOVE FINISH FLOOR
CEE	RECESSED MOUNTED DUPLEX RECEPTACLES 3PH, 380V, 30A, 50HZ GROUNDING DIN TYPE MOUNTING HEIGHT =450mm ABOVE FINISH FLOOR
G	RECESSED MOUNTED DUPLEX RECEPTACLE LABEL INDICATE (HOSPITAL GRAD) 1PH, 240V, 16A, 50HZ GROUNDING DIN TYPE . MOUNTING HEIGHT =500mm ABOVE FINISH FLOOR INSULATED 4mm GROUNDING WIRE PER EACH RECEPTACLE
	SINGLE POWER SOCKET OUTLET, 220V, 50HZ, 20A MOUNTING HEIGHT = 450mm (U.O.N.)
PB	100mm x 100mm PULL BOX.
J	100mm x 100mm JUNCTION BOX
J CL	JUNCTION BOX FOR CEILING FAN WITH LIGHTS, SEE MECH STD. DETAILS
C.B	CIRCUIT BREAKER 30 AMP , 3 POLE , 380V , 50HZ
M	MOTORIZE DAMPER
REL	RELAY PANEL
M	MOTOR
H	HEATER
B XX-E-01	DETAIL DESIGNATION, TOP NUMBER INDICATE DETAIL NUMBER, BOTTOM LETTER INDICATES SHEET REF. NUMBER.

LIGHT FIXTURE NOTES:

1. ALL PENDANT MOUNTED FIXTURES ARE TO INCLUDE MANUFACTURERS "BALL-HANGER" TYPE CANOPY TO COMPENSATE FOR ROOF PITCH. FIELD CUT TO LENGTH.
2. ALL LIGHTING FIXTURES TO BE PROVIDED WITH "STANDARD" HIGH POWER FACTOR "ELECTRONIC" BALLASTS, UNLESS NOTED OTHERWISE.

LINE TYPE:

- - - - - - -	EXPOSED CONDUIT
————	EMBEDDED OR CONCEALED CONDUIT
- - - L - - -	LIGHTNING PROTECTION CONDUCTOR

ABBREVIATIONS:

A	AMP
A.H.U.	AIR HANDLING UNIT
A/C	AIR CONDITIONING
A.C.U.	AIR CONDITION UNIT
A.F.F.	ABOVE FINNISH FLOOR LEVEL
C	CONDUIT
CB	CIRCUIT BREAKER
CHH	COMMUNICATION HANDHOLE
C.L.	CENTERLINE
C.O.E.	CORE OF ENGINEERS
CU	CONDENSING UNIT
ø, DIA	DIAMETER
EF	EXHAUST FAN
EHH	ELECTRICAL HANDHOLE
EMT	ELECTRIC METALLIC TUBING
EWH	ELECTRICAL WATER HEATER
FACP	FIRE ALARM CONTROL PANEL
GFI	GROUND FAULT INTERRUPTER
GRS	GALVANIZED RIGID STEEL
HZ	HERTZ
IR	IMPULSE RELAY
IL	INVERTED LEVEL
UTP	UNSHIELDED TWISTED PAIR
N.F.D.S	NON FUSED DISCONNECT SWITCH
L.C.	LIGHTING CONTACTOR
L.F.	LIGHT FIXTURE
LPI	LIGHTNING PROTECTION INSTITUTE
M	METER
MAX	MAXIMUM
MD	MOTORIZE DAMPER
MECH	MECHANICAL
MLO	MAIN LUGS ONLY
mm	MILLIMETER
P.A.C.U.	PACKAGE AIR CONDITION UNIT
PVC	POLYVINYL CHLORIDE
RM	ROOM
SF	SUPPLY FAN
S.U.	SPLIT UNIT
TRANS	TRANSFORMER
TTC	TELEPHONE TERMINAL CABINET
TYP	TYPICAL
TV	TELEVISION
U.O.N.	UNLESS OTHERWISE NOTED
V	VOLT
W	WATT
WP	WEATHER PROOF
WR	WELDING RECEPTACLE
RP	RECALCULATION PUMP

GENERAL NOTES:

1. MOUNTING HEIGHT OF SWITCHES 1.3M AFF UNLESS OTHERWISE NOTED.
2. MOUNT RECEPTACLES AND TELPHONE/DATA OUTLETS 450mm AFF UNLESS OTHERWISE NOTED. W=MOUNT 1.4M AFF.
3. MOUNT TELEPHONE TERMINAL CABINET (TTC) 1800mm FROM THE TOP OF CABINET TO FLOOR.
4. MOUNT ELECTRICAL PANELS 1800mm A.F.F. TO THE TOP OF THE PANEL.
5. TELEPHONE/DATA CABLE SHALL BE CAT 5E, 4 PAIRS
6. FOR EXACT LOCATION OF MECHANICAL EQUIPMENT REFER TO MECHANICAL DESIGN DRAWINGS.
7. EQUIPMENT SHALL BE RATED FOR 40 DEGREES C AND 2000 METERS (ABOVE SEA LEVEL) ELEVATION
8. THE GROUNDING RESISTANCE SHALL BE NO HIGHER THAN 25 OHMS , EXCEPT IN THE UPS AND EQUIPMENT ROOM SHALL BE 5 OHMS MEASURED MIN OF 48 HRS AFTER RAINFALL, ADDITIONAL RODS SHOULD BE USED TO ACHIEAVED THE REQUIRED RESISTANCE
9. ALL LIGHT FIXTURES SHALL BE SEISMICALLY BRACED.
10. ALL PANEL BOARD AIC RATINGS AS SHOWN ON SCHEDULES.
11. THE ELECTRICAL WIRING SHOWN ON PLAN DRAWINGS IS DIAGRAMMATIC AND INTENDED TO IDENTIFY THE CIRCUIT ARRANGEMENT FOR EACH AREA. THE CONDUIT CAN BE COMBINED FOR DIFFERENT CIRCUITS, PROVIDED THE INSTALLATION MEETS THE NEC, WITH NO MORE THAN 3 CONNECTIVE CIRCUITS IN ANY CONDUIT, SUCH AS 1, 3, 5 OR 2, 4, 6, ETC. THE 3 CIRCUITS CAN SHARE ONE NEUTRAL CONDUCTOR.

UNLESS OTHERWISE NOTED, LINEAR DIMENSIONS SHOWN ARE IN MILLIMETERS.

SYMBOL	DESCRIPTION	DATE	APP.

Designed By:
Drawn By:
Checked By:
Date: 10 MAY 2007
File No. AF0707
I.S.O. Sheet File Name: AF0707DB-EL01GN.dwg
Solicitation Number: –

US Army Corps of Engineers
Transatlantic Programs Center

ANA REGIONAL BRIGADE
PAKTIKA, AFGHANISTAN
INTERPRETER FACILITIES
MWR
ELECTRICAL
LEGEND AND NOTES

SHEET REFERENCE NUMBER:
DB-GE-01

$DATE$
$FILE$

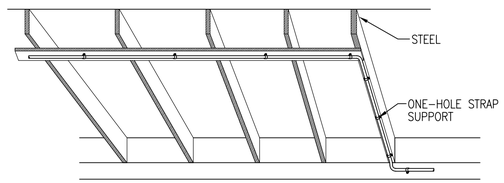

1 SURFACE MOUNTED CONDUIT SUPPORT

SCALE: N.T.S

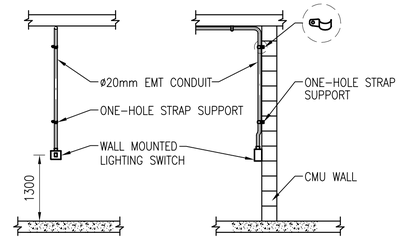

NOTE:-
WALL MOUNTED LIGHTING OUTLETS SHOULD BE CENTRAL ON A BLOCK, NOT BETWEEN TWO BLOCKS.

2 GENERAL INSTALLATION DETAIL FOR LIGHTING SWITCH (CONDUIT EXPOSED)

SCALE: N.T.S

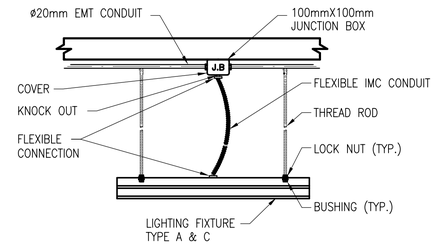

3 PENDANT LIGHT FIXTURE DETAIL (NOT USED)

SCALE: N.T.S

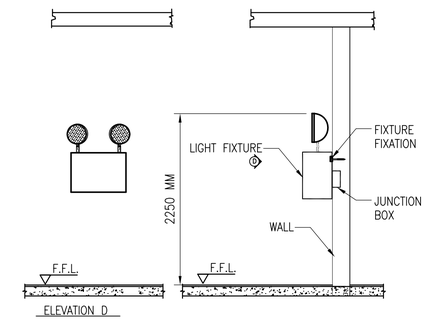

4 SURFACE EMERGENCY LIGHT FIXTURE DETAIL

SCALE: N.T.S

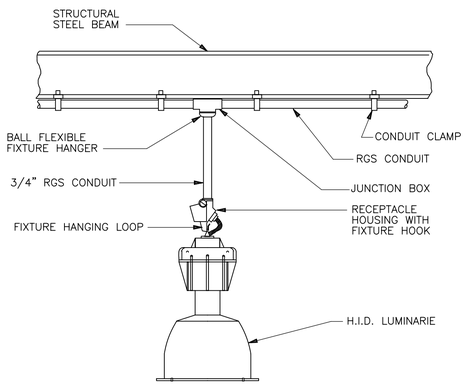

5 H.I.D. LUMINARIE PENDANT MOUNTED

SCALE: N.T.S

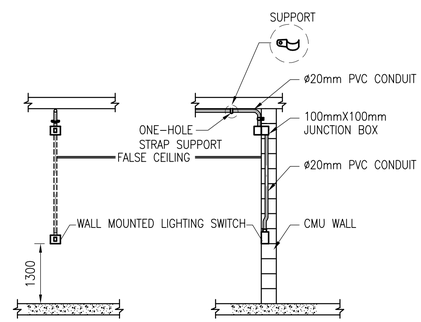

6 GENERAL INSTALLATION DETAIL FOR LIGHT SWITCH (CONDUIT CONCEALED)

SCALE: N.T.S

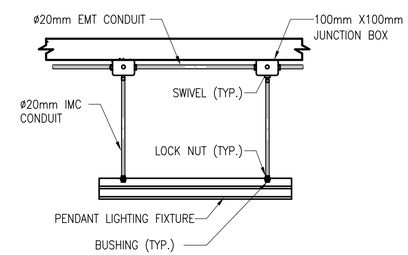

7 INSTALLATION OF LIGHTING FIXTURE IN SEISMIC BUILDING

SCALE: N.T.S

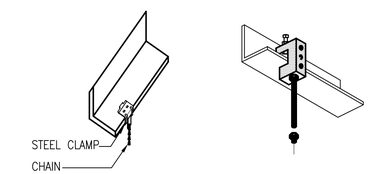

THE CHAIN FIXATION

THREADED ROD FIXATION

8 GENERAL SUPPORT DETAIL

SCALE: N.T.S

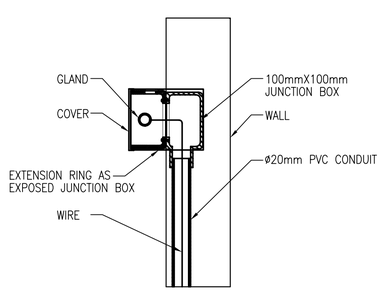

9 CONVERTING FROM EXPOSED TO EMBEDDED ROUTING IN WALL

SCALE: N.T.S

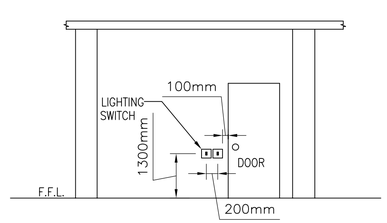

NOTE:-
THE LOCATION OF THE CONDUIT FEEDING THE FIRST SWITCH TO BE 100mm FROM THE DOOR OPENING

10 LIGHT SWITCH MOUNTING

SCALE: N.T.S

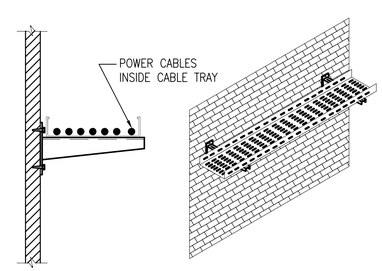

11 GENERAL INSTALLATION DETAIL FOR WALL MOUNTED CABLE TRAY

SCALE: N.T.S

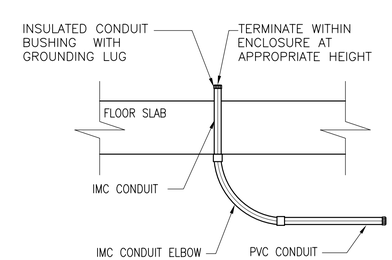

12 TYPICAL CONDUIT STUB-UP THROUGH FLOOR SLAB FOR FEEDING EQUIPMENT

SCALE: N.T.S

UNLESS OTHERWISE NOTED, LINEAR DIMENSIONS SHOWN ARE IN MILLIMETERS.

SYMBOL	DESCRIPTION	DATE	APP.

Designed By:
Drawn By:
Checked By:
Date: 10 MAY 2007
File No. AF0707
I.S.O. Sheet File Name: AF0707DB-EL01DT.dwg
Solicitation Number: –

US Army Corps of Engineers Transatlantic Programs Center

ANA REGIONAL BRIGADE
PAKTIKA, AFGHANISTAN
INTERPRETER FACILITIES
MWR
ELECTRICAL DETAILS

SHEET REFERENCE NUMBER:
DB-DE-01

$DATE$
$FILE$

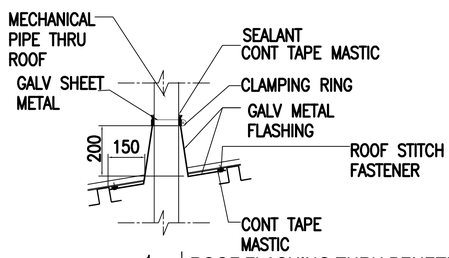

1 ROOF FLASHING THRU PENETRATION

SCALE: NTS

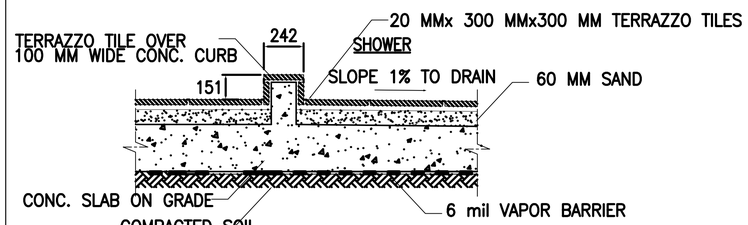

2 THRESHOLD DETAIL @ SHOWER

SCALE: NTS

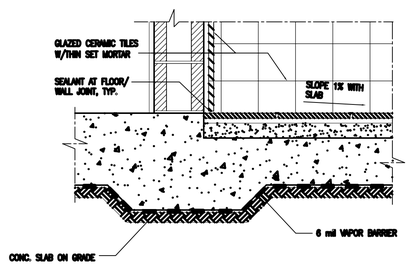

3 TERRAZZO TILE DETAIL

SCALE: NTS

NOT USED

4 ROOF EAVE DETAIL

SCALE: NTS

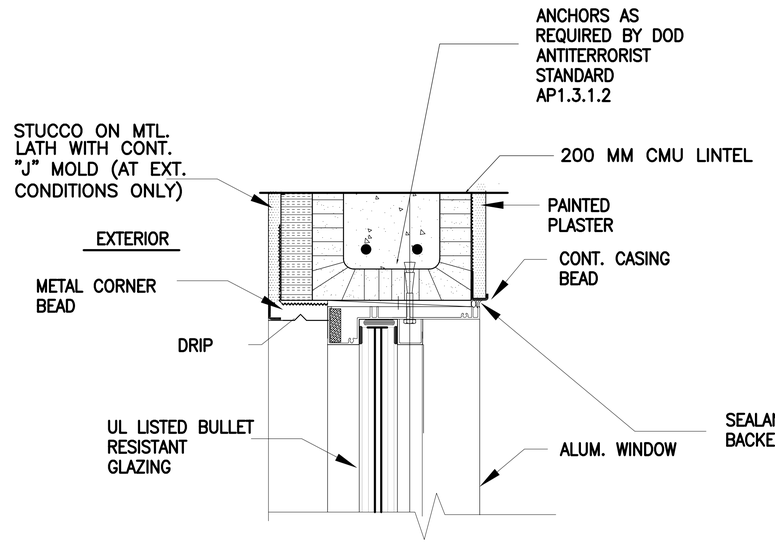

7 WINDOW HEAD DETAIL

SCALE: NTS

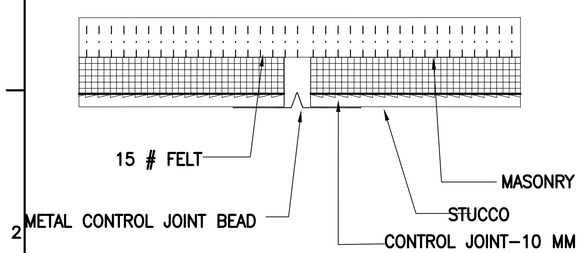

5 STUCCO CONTROL JOINT

SCALE: N.T.S.

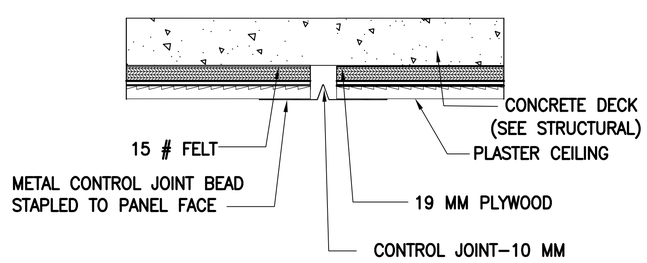

6 PLASTER CEILING CONTROL JOINT

SCALE: N.T.S.

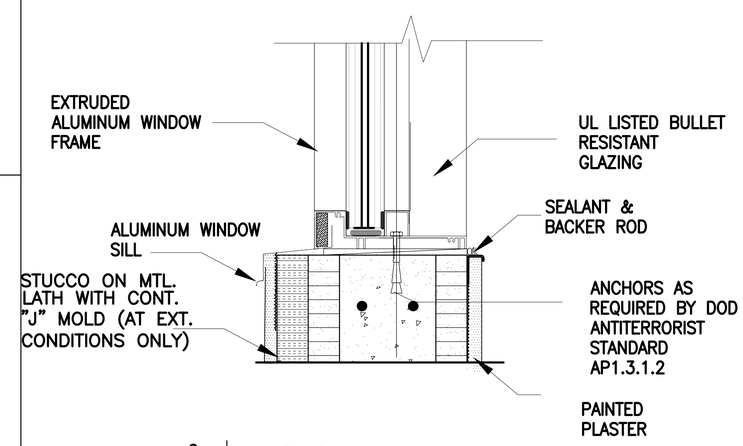

8 WINDOW SILL DETAIL

SCALE: NTS

UNLESS OTHERWISE NOTED, LINEAR DIMENSIONS SHOWN ARE IN MILLIMETERS.

SYMBOL	DESCRIPTION	DATE	APR

Designed By: R. E. BROWN
Drawn By: R. E. BROWN
Checked By: B.R. THOMAS
Date: 10 MAY 2007
File No. AF0707
I.S.O. Sheet File Name: AF0707DB-AR13DT.dwg
Solicitation Number: –

US Army Corps of Engineers Transatlantic Programs Center

ANA REGIONAL BRIGADE
PAKTIKA, AFGHANISTAN
INTERPRETER FACILITIES
MWR
MISCELLANEOUS DETAILS

SHEET REFERENCE NUMBER:
DB–A–13

$DATE$
$FILE$

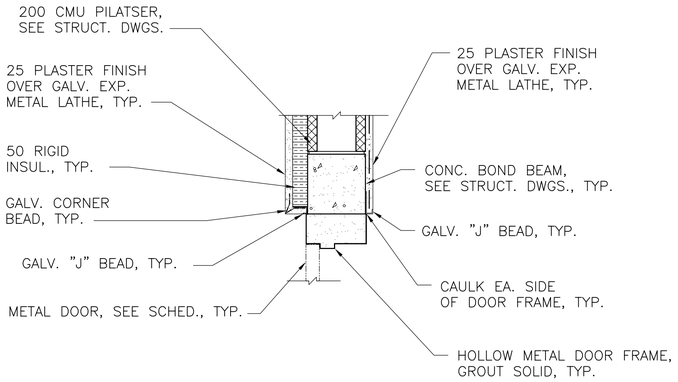

1 DETAIL - EXTERIOR DOOR HEAD

DB-A-01 REF. SCALE: 1:10

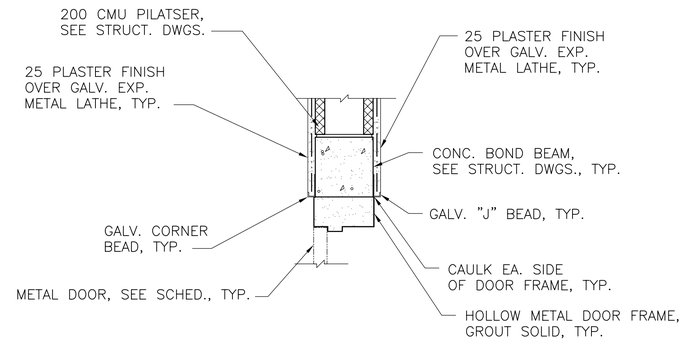

4 DETAIL - INTERIOR DOOR HEAD

DB-A-01 REF. SCALE: 1:10

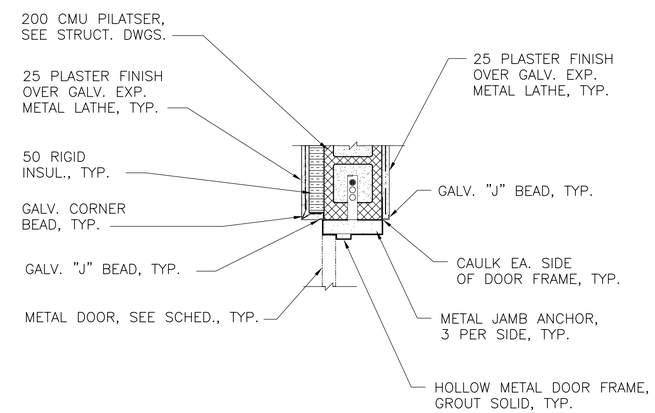

2 DETAIL - EXTERIOR DOOR JAMB

DB-A-01 REF. SCALE: 1:10

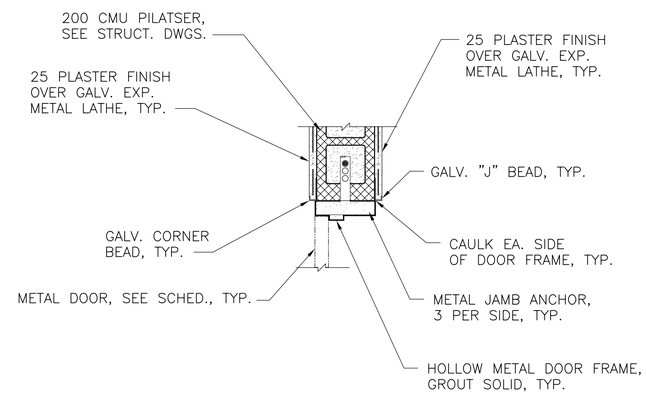

5 DETAIL - INTERIOR DOOR JAMB

DB-A-01 REF. SCALE: 1:10

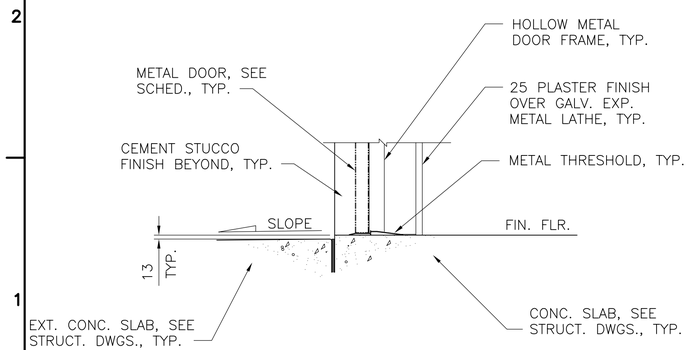

3 DETAIL - EXTERIOR DOOR SILL

DB-A-01 REF. SCALE: 1:10

GRAPHIC SCALE:

200 0 200mm

SCALE: 1 = 10

UNLESS OTHERWISE NOTED, LINEAR DIMENSIONS SHOWN ARE IN MILLIMETERS.

SYMBOL	DESCRIPTION	DATE	APP.

Designed By: R. BROWN
Date: 10 MAY 2007
Drawn By: D. GRIFFIN
File No. AF0707
Checked By: R. BROWN
I.S.O. Sheet File Name: AF0707DB-AR12DT.dwg
B. THOMAS
Solicitation Number: –

US Army Corps of Engineers Transatlantic Programs Center

ANA REGIONAL BRIGADE
PAKTIKA, AFGHANISTAN
INTERPRETER FACILITIES
MWR

DOOR AND COLUMN DETAILS

SHEET REFERENCE NUMBER:
DB–A–12

$DATE$
$FILE$

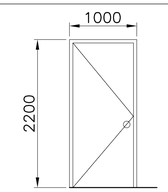

1 DOOR (D1)
SCALE: 1:40

1A DOOR (D1A) 20-MIN. FIRE RATED
SCALE: 1:40

1B DOOR (D1B) 45-MIN. FIRE RATED
SCALE: 1:40

1C DOOR (D1C) INSULATED
SCALE: 1:40

1D DOOR (D1D) 90-MIN. FIRE RATED
SCALE: 1:40

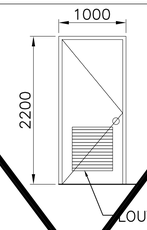

2 DOOR (D2)
SCALE: 1:40

2A DOOR (D2A) 20-MIN. FIRE RATED
SCALE: 1:40

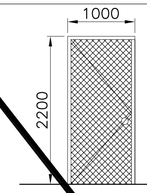

3 DOOR (D3)
SCALE: 1:40

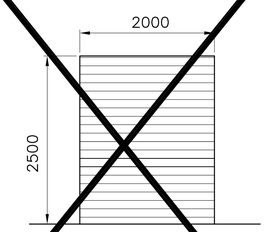

4 DOOR (D4)
SCALE: 1:40

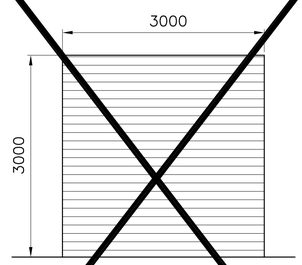

5 DOOR (D5)
SCALE: 1:40

5A DOOR (D5A)
SCALE: 1:40

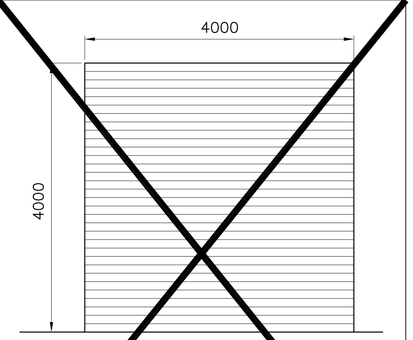

6 DOOR (D6)
SCALE: 1:40

6A DOOR (D6A)
SCALE: 1:40

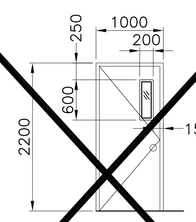

7 DOOR (D7)
SCALE: 1:40

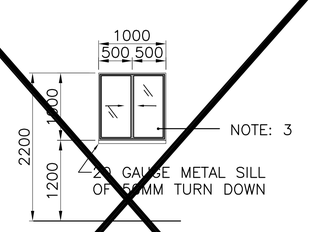

8 WINDOW (W1)
SCALE: 1:40

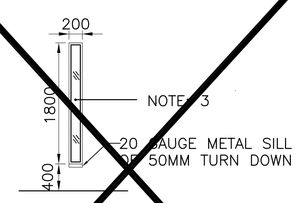

9 WINDOW (W2)
SCALE: 1:40

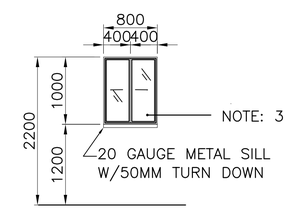

10 WINDOW (W3)
SCALE: 1:40

DOOR SCHEDULE

DOOR NO.	DIMENSION WIDTH	DIMENSION HEIGHT	PANEL NUMBER	OPENING SYSTEM	HDWR. NO.	MATERIAL
D1	1000	2200	1	HINGED	–	HM DOOR IN HM FRAME
~~D1A~~	~~1000~~	~~2200~~	~~1~~	~~HINGED~~		HM DOOR IN HM FRAME; 20 MIN FIRE RATED
~~D1B~~	~~1000~~	~~2200~~	~~1~~	~~HINGED~~		HM DOOR IN HM FRAME; 45 MIN FIRE RATED
D1C	1000	2200	1	HINGED	–	HM DOOR IN HM FRAME; INSULATED
~~D1D~~	~~1000~~	~~2200~~	~~1~~	~~HINGED~~		HM DOOR IN HM FRAME; 90 MIN FIRE RATED
D2	3000	3000	1	HINGED	–	HM DOOR IN HM FRAME W/ LOUVER
D2A	3000	4000	1	HINGED	–	HM DOOR IN HM FRAME W/ FIRE DAMPER FUSIBLE LINK LOUVER 20 MIN FIRE RATED
~~D3~~	~~1000~~	~~2200~~	~~1~~	~~HINGED~~	–	WELDED WIRE MESH IN STEEL FRAME
~~D4~~	~~2000~~	~~2500~~	~~1~~	~~ROLL-UP~~	–	STEEL DOOR & FRAM, MANUALLY OPERATED, INSULATED
~~D5~~	~~3000~~	~~3000~~	~~1~~	~~ROLL-UP~~	–	STEEL DOOR & FRAM, MANUALLY OPERATED, INSULATED
~~D5A~~	~~3000~~	~~3000~~	~~1~~	~~ROLL-UP~~	–	STEEL DOOR & FRAM, MANUALLY OPERATED, UNINSULATED
~~D6~~	~~4000~~	~~4000~~	~~1~~	~~ROLL-UP~~	–	STEEL DOOR & FRAM, MANUALLY OPERATED, INSULATED
~~D6A~~	~~4000~~	~~4000~~	~~1~~	~~ROLL-UP~~	–	STEEL DOOR & FRAM, MANUALLY OPERATED, INSULATED
D7	1000	2200	1	HINGED	–	HM DOOR IN HM FRAME W/ LAMINATED GLAZING

WINDOW SCHEDULE

WINDOW NUMBER	DIMENSION WIDTH	DIMENSION HEIGHT	DIMENSION SILL HEIGHT	PANEL NUMBER	OPENING SYSTEM	DESCRIPTION
W1	1000	1000	1700	2	SLIDING	ALUM. PANELS W/TRANSPARENT 6MM GLASS METAL SILL AND FIXED INSECT METAL SCREEN
W2	200	1800	400	1	FIXED	ALUM. PANELS W/6MM WIRE GLASS
W3	800	1000	1700	2	SLIDING	ALUM. PANELS W/TRANSPARENT 6MM GLASS METAL SILL AND FIXED INSECT METAL SCREEN

NOTES:

1. FOR HARDWARE SET DESCRIPTION SEE SPECIFICATIONS SECTION.
2. ITEMS BLOCKED OUT, OR LINED THROUGH, DO NOT APPLY TO THIS FACILITY.
3. ALL GLAZING SHALL BE LAMINATED.

GRAPHIC SCALE:

200 0 200mm
SCALE: 1 = 10

UNLESS OTHERWISE NOTED, LINEAR DIMENSIONS SHOWN ARE IN MILLIMETERS.

SYMBOL	DESCRIPTION	DATE	APP.

Designed By: R. BROWN
Drawn By: D. GRIFFIN
Checked By: R. BROWN
B. THOMAS
Date: 10 MAY 2007
File No. AF0707
I.S.O. Sheet File Name: AF0707DB-AR11SC.dwg
Solicitation Number: –

US Army Corps of Engineers Transatlantic Programs Center

ANA REGIONAL BRIGADE
PAKTIKA, AFGHANISTAN
INTERPRETER FACILITIES
MWR

DOOR & WINDOW SCHEDULE

SHEET REFERENCE NUMBER:
DB-A-11

$DATE$
$FILE$

FINISH SCHEDULE

ROOM NO.	ROOM NAME	FLOOR	CEILING	INTERIOR WALLS				REMARKS
				NORTH	EAST	SOUTH	WEST	
100	CORRIDOR	F1	C1	W1	W1	W1	W1	–
101	COMPUTER/INTERNET	F1	C1	W1	W1	W1	W1	–
102	TV/MEDIA ROOM	F1	C1	W1	W1	W1	W1	–
103	READING ROOM/LIBRARY	F1	C1	W1	W1	W1	W1	–
104	RECREATION ROOM	F1	C1	W1	W1	W1	W1	–
105	JANITOR	F2	C2	W3	W3	W3	W3	–
106	COMM ROOM	F2	C2	W3	W3	W3	W3	–
107	REST ROOM	F1	C1	W2	W2	W2	W2	–
108	OFFICE	F1	C1	W1	W1	W1	W1	–

FINISHING SCHEDULE LEGEND

FLOOR	
F1	TERRAZO TILE
F2	SEALED CONCRETE
WALL	
W1	CMU W/ PAINTED PLASTER
W2	CERAMIC TILE
W3	PAINTED CMU
CEILING	
C1	PAINTED 25 MM PLASTER
C2	PAINTED EXPOSED PLYWOOD
C3	PAINTED EXPOSED CONRETE
WALL SYMBOLS:	
	CMU WALL
CJ	CONTROL JOINT

NOTES:

1– ALL WALLS ARE 200MM THK. CMU UNLESS NOTED OTHERWISE.

2– ALL WALLS TERMINATE AT CEILING UNLESS NOTED OTHERWISE. REF. STRUCT. DRWGS.

3– ALL DOOR JAMBS ARE 200MM UNLESS OTHERWISE NOTED.

4– ALL DIMENSIONS ARE TO FACE OF CMU UNLESS NOTED OTHERWISE.

5– ALL VERTICAL DIMENSIONS & LEVELS ARE FROM GROUND FLOOR FINISHED SLAB. THIS ELEVATION IS +0000.

6– OPEN

7– SEE STRUCTURAL DRAWINGS FOR LOCATION OF BUILDING CONTROL, EXPANSION AND SEISMIC JOINTS.

8– ALL HVAC OPENINGS DIMENSION SHALL BE VERIFIED WITH APPROVED SUBMITTALS.

9– ALL EXPOSED PURLINS, COLUMNS, FRAMES, AND GIRTS SHALL BE PAINTED.

10– TOTAL AREA OF BUILDING IS 168.00 M2.

GRAPHIC SCALE:

200 0 200mm

SCALE: 1 = 10

UNLESS OTHERWISE NOTED, LINEAR DIMENSIONS SHOWN ARE IN MILLIMETERS.

SYMBOL	DESCRIPTION	DATE	APR

Designed By: R. BROWN
Drawn By: D. GRIFFIN
Checked By: R. BROWN
B. THOMAS

Date: 10 MAY 2007
File No. AF0707
I.S.O. Sheet File Name: AF0707DB-AR10SC.dwg
Solicitation Number: –

US Army Corps of Engineers
Transatlantic Programs Center

ANA REGIONAL BRIGADE
PAKTIKA, AFGHANISTAN
INTERPRETER FACILITIES
MWR

WALL SECTIONS

SHEET REFERENCE NUMBER:
DB–A–10

$DATE$
$FILE$

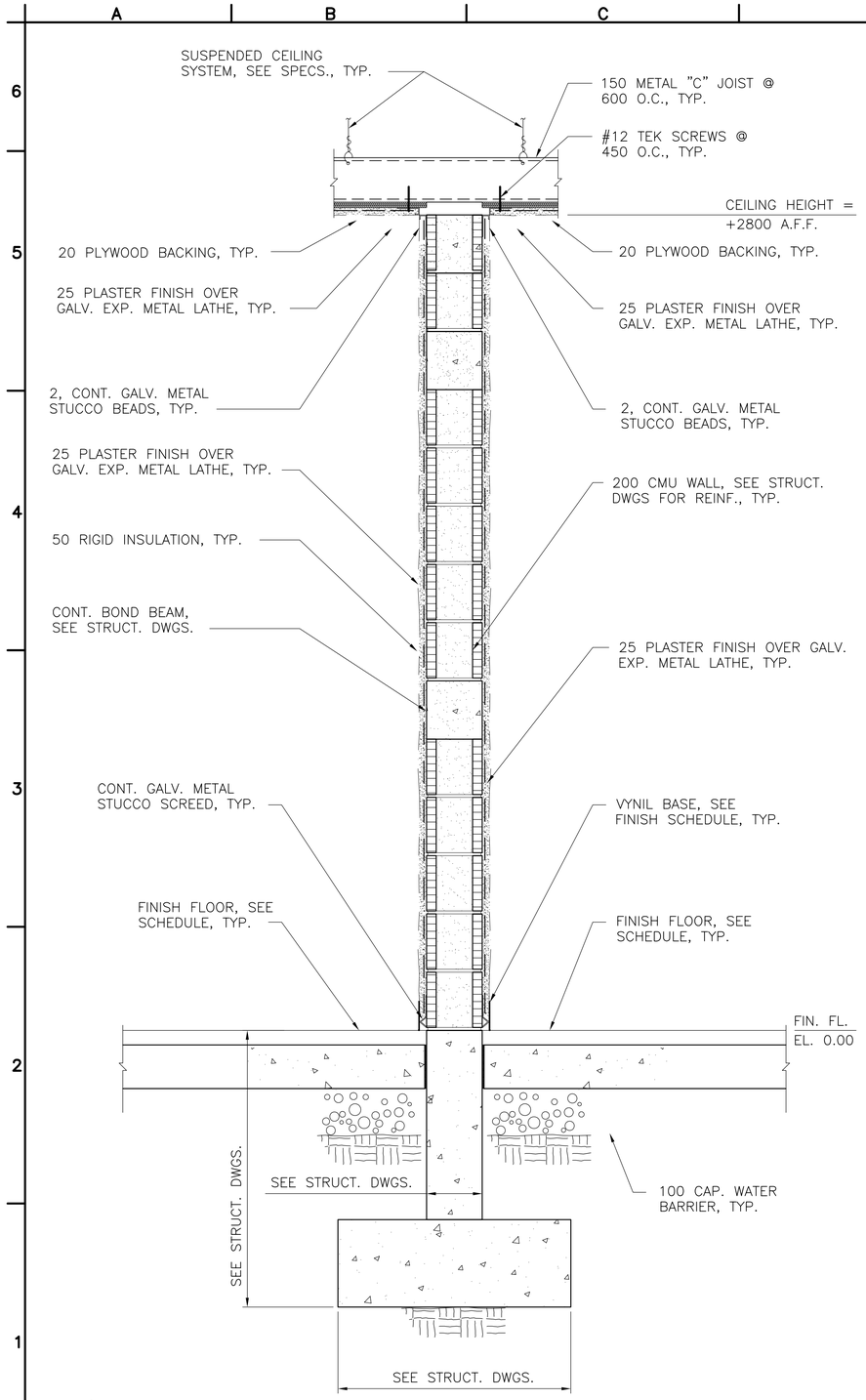

A SECTION

DB-A-01 REF. SCALE: 1:10

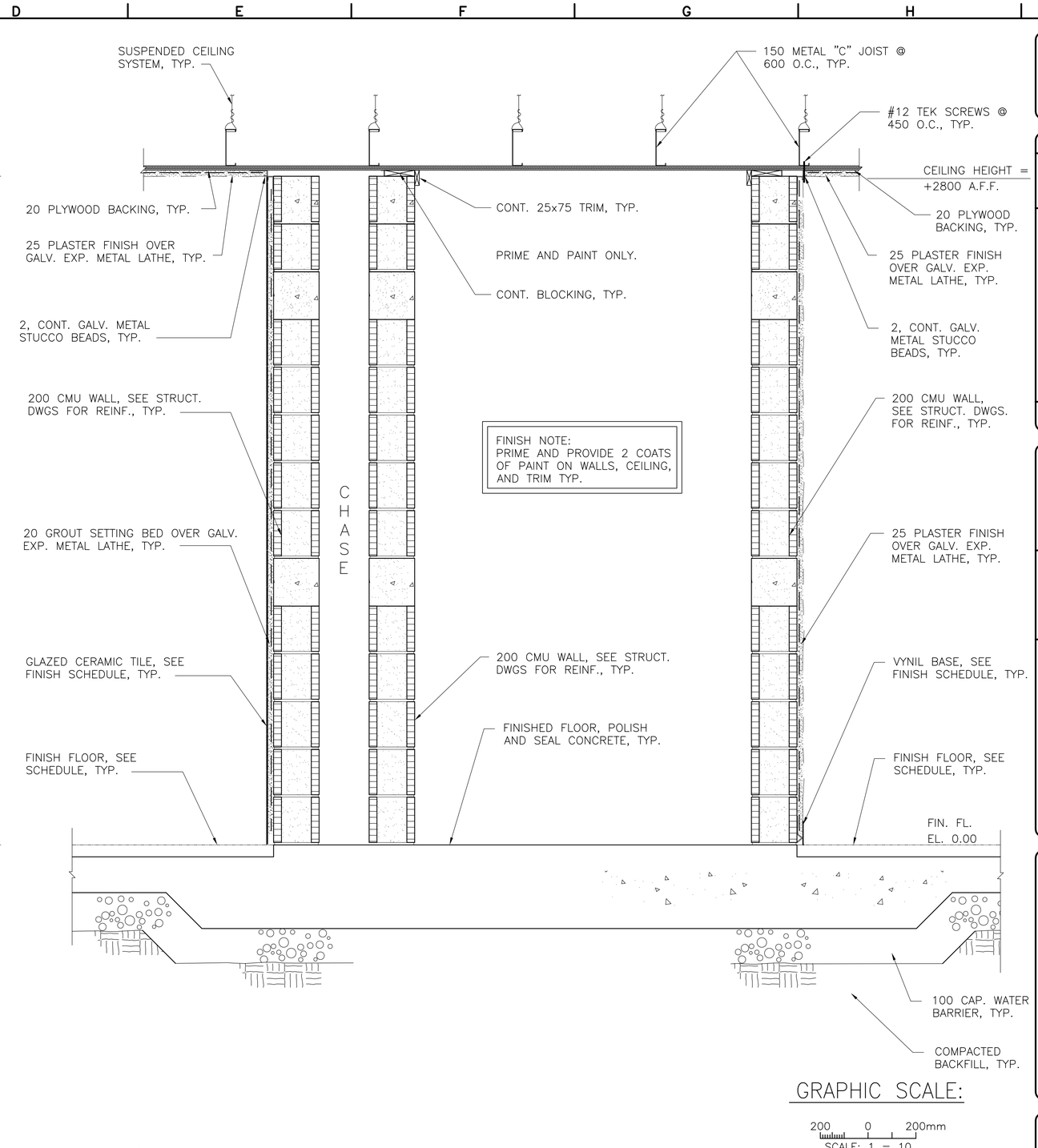

B SECTION

DB-A-01 REF. SCALE: 1:10

GRAPHIC SCALE:

200 0 200mm

SCALE: 1 = 10

UNLESS OTHERWISE NOTED, LINEAR DIMENSIONS SHOWN ARE IN MILLIMETERS.

SYMBOL	DESCRIPTION	DATE	APP.

Designed By: R. BROWN
Drawn By: D. GRIFFIN
Checked By: R. BROWN
B. THOMAS
Date: 10 MAY 2007
File No. AF0707
I.S.O. Sheet File Name: AF0707DB-AR09SE.dwg
Solicitation Number: -

US Army Corps of Engineers Transatlantic Programs Center

ANA REGIONAL BRIGADE
PAKTIKA, AFGHANISTAN
INTERPRETER FACILITIES
MWR

INTERIOR WALL SECTIONS

SHEET REFERENCE NUMBER:
DB-A-09

$DATE$
$FILE$

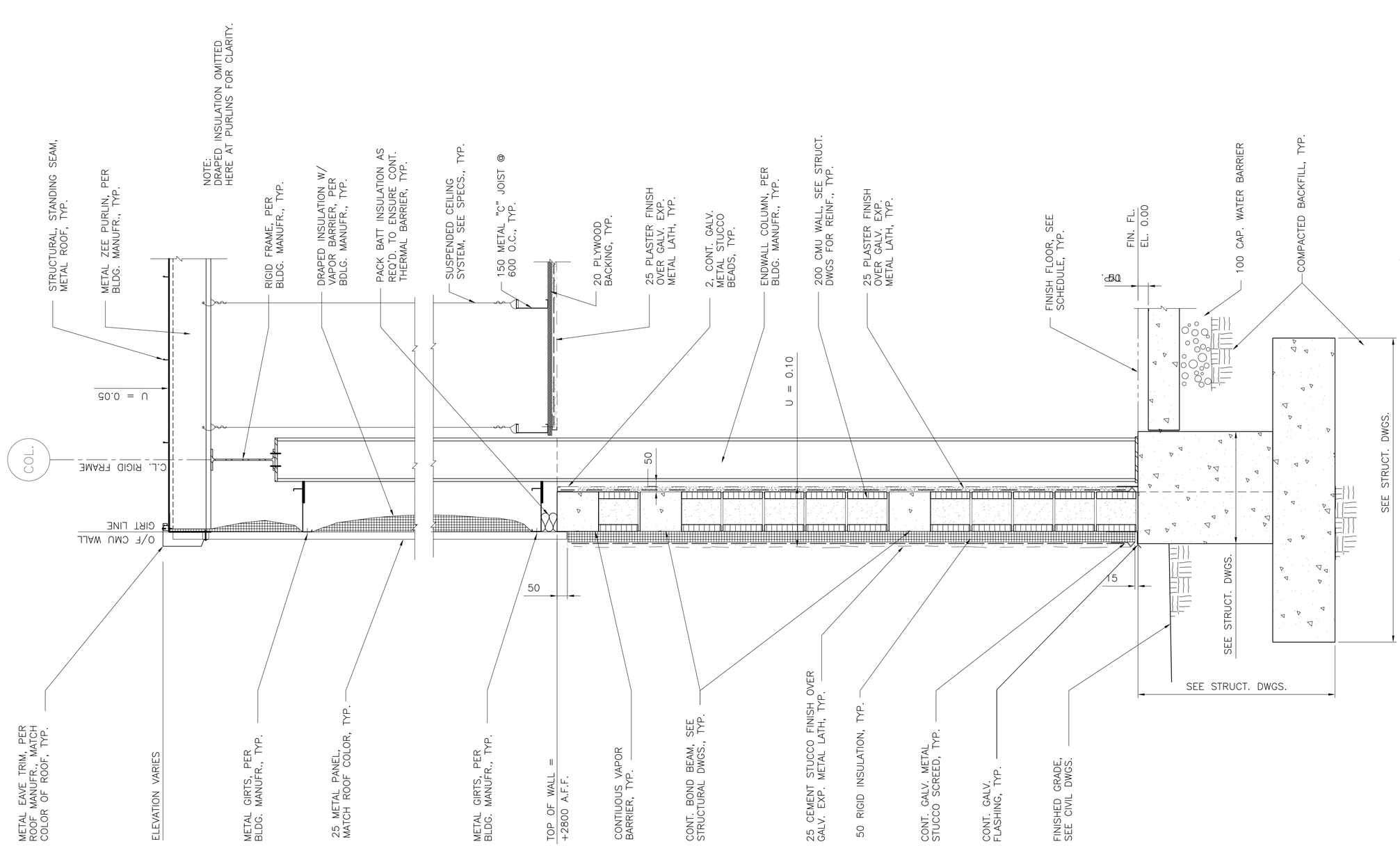

A SECTION
DB-A-01 | REF.
SCALE: 1:10

GRAPHIC SCALE:
200 0 200mm
SCALE: 1 = 10

UNLESS OTHERWISE NOTED, LINEAR DIMENSIONS SHOWN ARE IN MILLIMETERS.

SYMBOL	DESCRIPTION	DATE	APR

Designed By: R. BROWN
Date: 10 MAY 2007
Drawn By: D. GRIFFIN
File No. AF0707
Checked By: R. BROWN
I.S.O. Sheet File Name: AF0707DB-AR08SE.dwg
B. THOMAS
Solicitation Number: –

US Army Corps of Engineers Transatlantic Programs Center

ANA REGIONAL BRIGADE
PAKTIKA, AFGHANISTAN
INTERPRETER FACILITIES
MWR

WALL SECTION

SHEET REFERENCE NUMBER:
DB–A–08

$DATE$
$FILE$

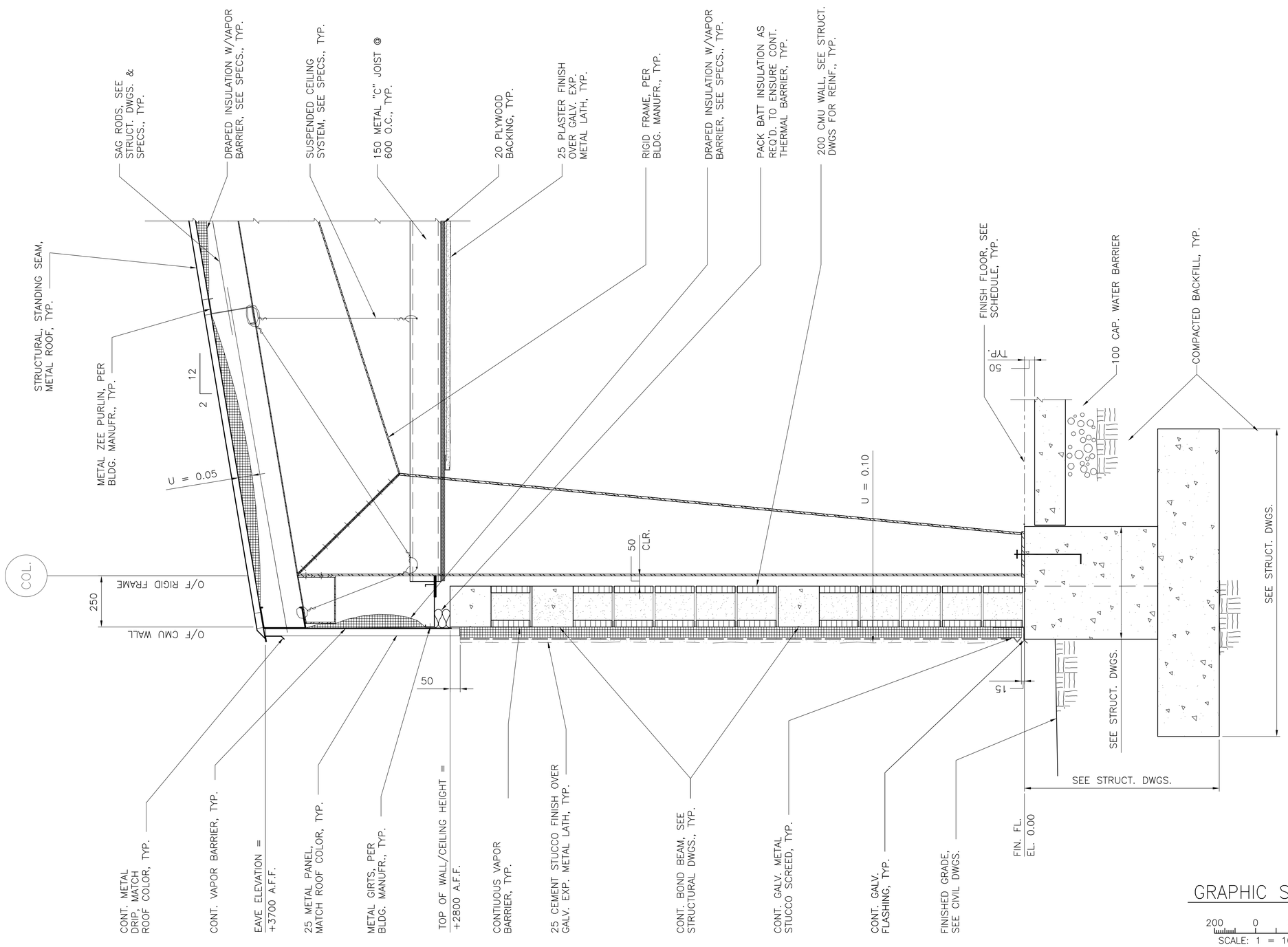

A SECTION

DB-A-01 | REF. | SCALE: 1:10

SYMBOL	DESCRIPTION	DATE	APP.

GRAPHIC SCALE:

200 0 200mm

SCALE: 1 = 10

UNLESS OTHERWISE NOTED, LINEAR DIMENSIONS SHOWN ARE IN MILLIMETERS.

Designed By: R. BROWN
Drawn By: D. GRIFFIN
Checked By: R. BROWN
B. THOMAS

Date: 10 MAY 2007
File No. AF0707
I.S.O. Sheet File Name: AF0707DB-AR07SE.dwg
Solicitation Number: –

US Army Corps of Engineers Transatlantic Programs Center

ANA REGIONAL BRIGADE
PAKTIKA, AFGHANISTAN
INTERPRETER FACILITIES
MWR

WALL SECTIONS

SHEET REFERENCE NUMBER:
DB-A-07

$DATE$
$FILE$

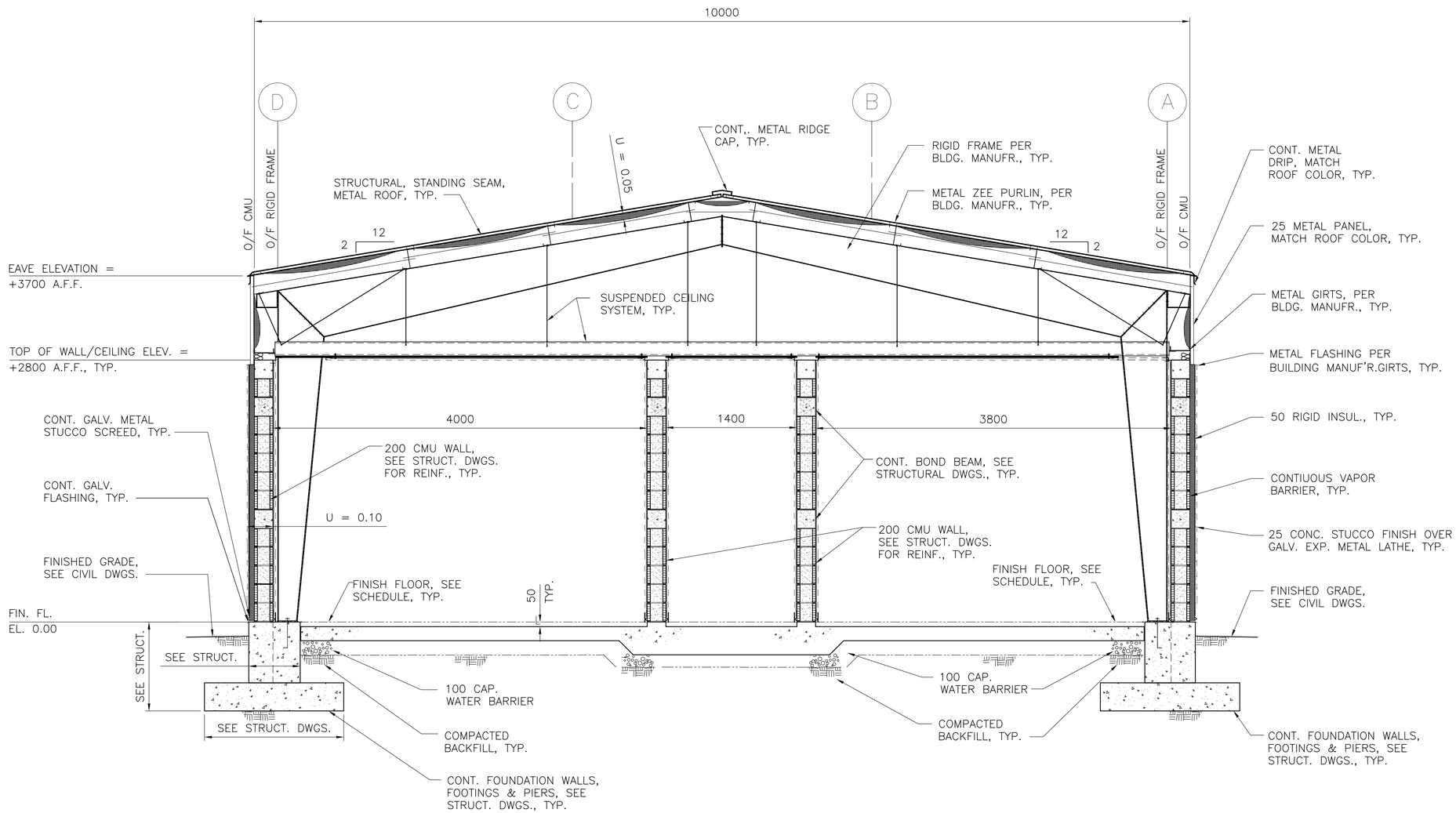

A | BUILDING SECTION

DB-A-01 | REF. | SCALE: 1:25

GRAPHIC SCALE:

500 0 500mm

SCALE: 1 = 25

UNLESS OTHERWISE NOTED, LINEAR DIMENSIONS SHOWN ARE IN MILLIMETERS.

SYMBOL	DESCRIPTION	DATE	APP.

Designed By: R. BROWN
Date: 10 MAY 2007
Drawn By: D. GRIFFIN
File No. AF0707
Checked By: R. BROWN
I.S.O. Sheet File Name: AF0707DB-AR06EL.dwg
B. THOMAS
Solicitation Number: –

US Army Corps of Engineers Transatlantic Programs Center

ANA REGIONAL BRIGADE
PAKTIKA, AFGHANISTAN
INTERPRETER FACILITIES
MWR

BUILDING SECTION

SHEET REFERENCE NUMBER:
DB–A–06

$DATE$
$FILE$

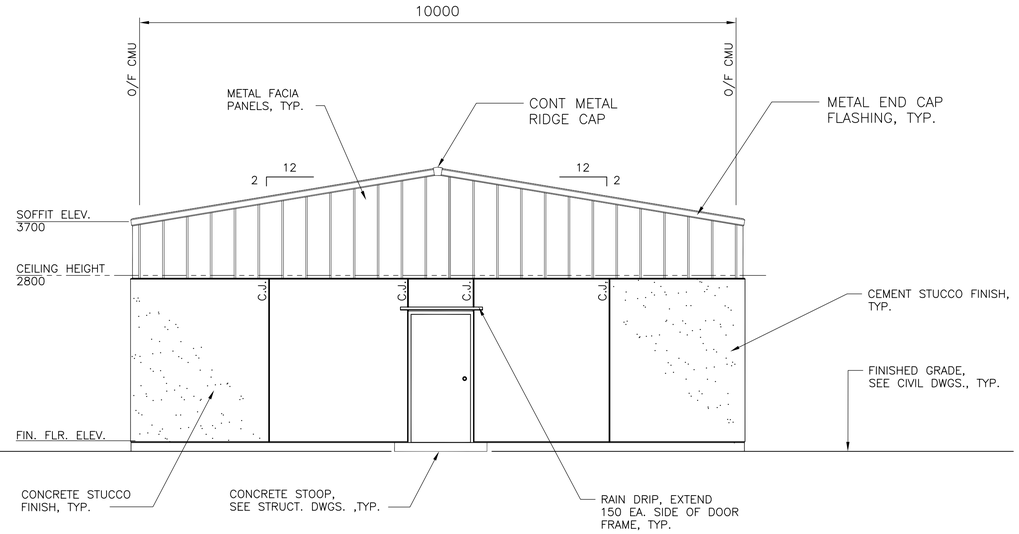

3 ELEVATION

DB-A-01 | REF. | SCALE: 1:50

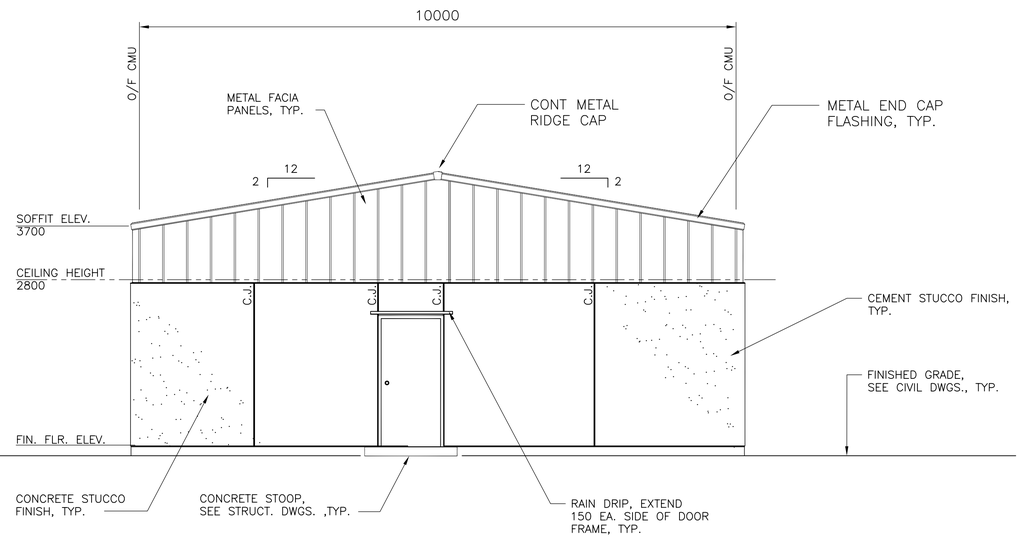

4 ELEVATION

DB-A-01 | REF. | SCALE: 1:50

GRAPHIC SCALE:

1000 0 1000mm

SCALE: 1 = 50

UNLESS OTHERWISE NOTED, LINEAR DIMENSIONS SHOWN ARE IN MILLIMETERS.

SYMBOL	DESCRIPTION	DATE	APP.

Designed By: R. BROWN
Drawn By: D. GRIFFIN
Checked By: R. BROWN
B. THOMAS

Date: 10 MAY 2007
File No. AF0707
I.S.O. Sheet File Name: AF0707DB-AR05EL.dwg
Solicitation Number: –

US Army Corps of Engineers Transatlantic Programs Center

ANA REGIONAL BRIGADE
PAKTIKA, AFGHANISTAN
INTERPRETER FACILITIES
MWR

ELEVATIONS 3 & 4

SHEET REFERENCE NUMBER:
DB–A–05

$DATE$
$FILE$

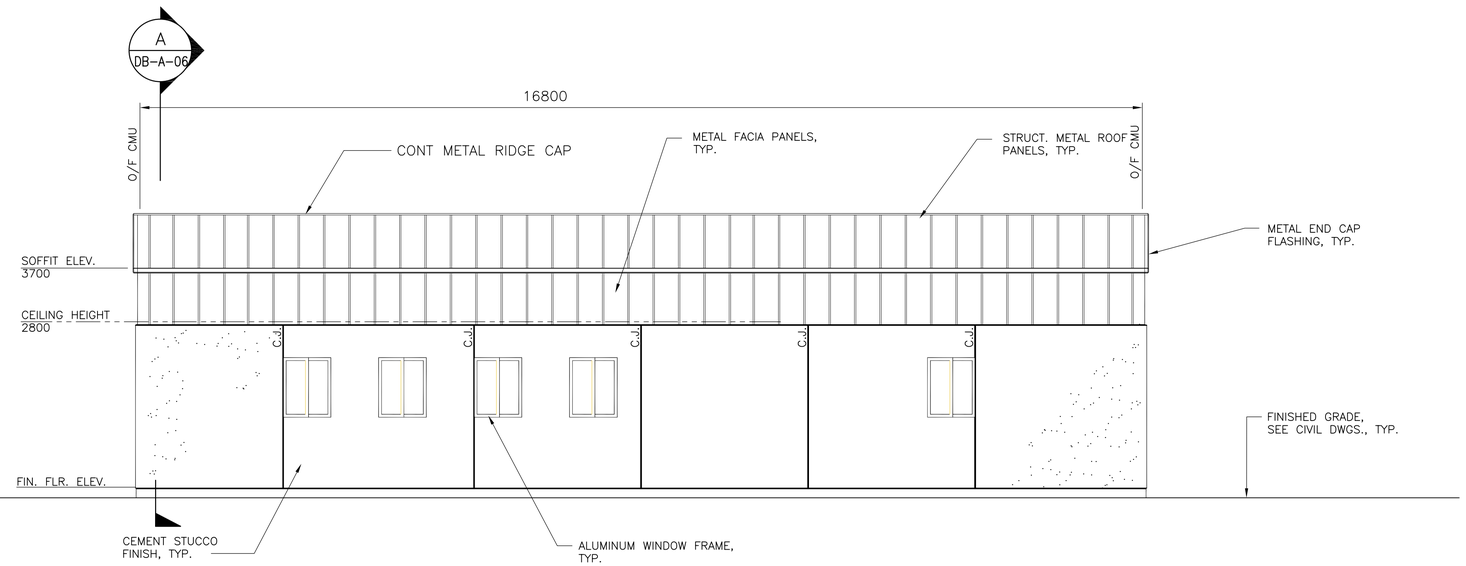

1 ELEVATION

DB-A-01 REF. SCALE: 1:50

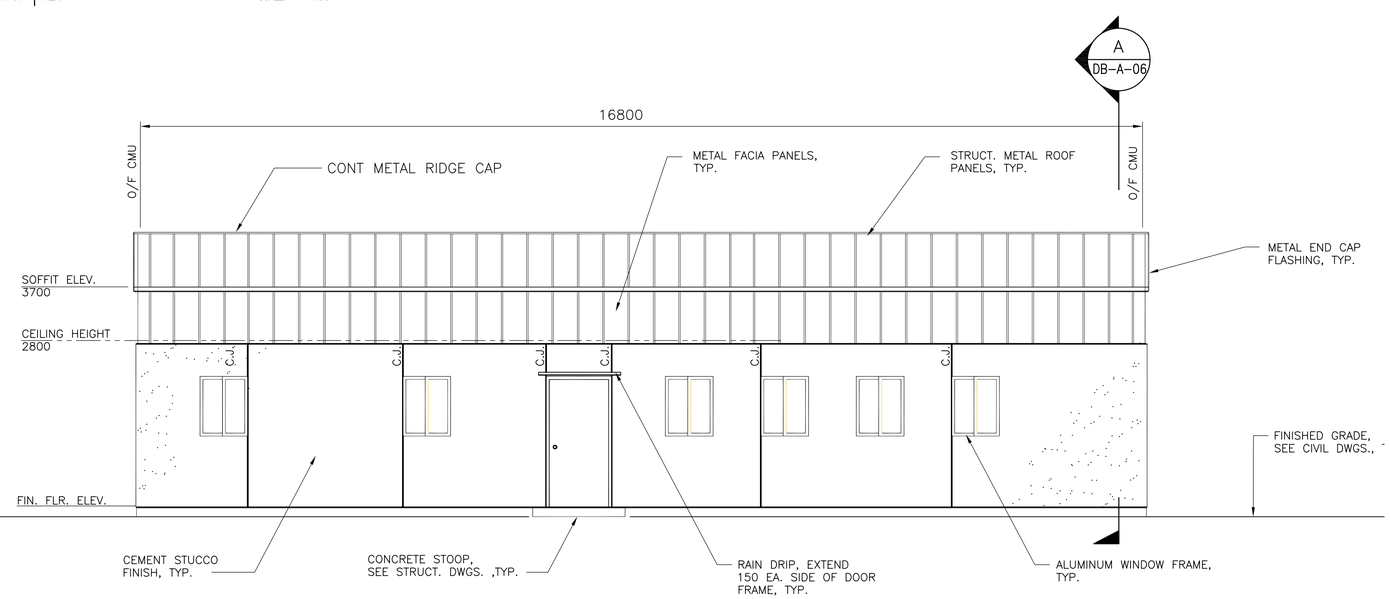

2 ELEVATION

DB-A-01 REF. SCALE: 1:50

GRAPHIC SCALE:

1000 0 1000mm

SCALE: 1 = 50

UNLESS OTHERWISE NOTED, LINEAR DIMENSIONS SHOWN ARE IN MILLIMETERS.

SYMBOL	DESCRIPTION	DATE	APP.

Designed By: R. BROWN
Drawn By: D. GRIFFIN
Checked By: R. BROWN
B. THOMAS

Date: 10 MAY 2007
File No. AF0707
I.S.O. Sheet File Name: AF0707DB-AR04EL.dwg
Solicitation Number: –

US Army Corps of Engineers Transatlantic Programs Center

ANA REGIONAL BRIGADE
PAKTIKA, AFGHANISTAN
INTERPRETER FACILITIES
MWR

ELEVATIONS

SHEET REFERENCE NUMBER:
DB–A–04

$DATE$
$FILE$

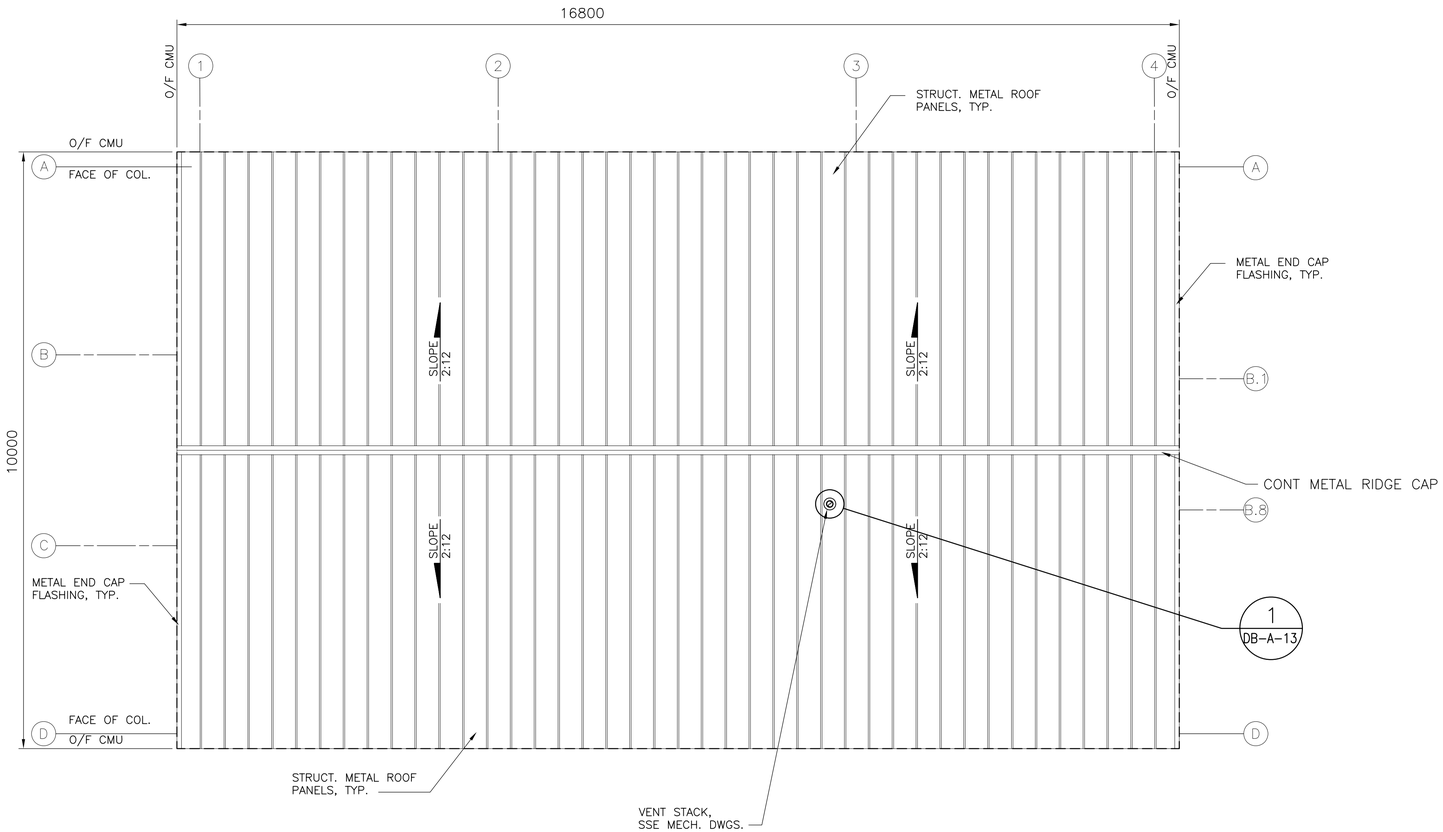

MWR – ROOF PLAN

SCALE: 1:50

GRAPHIC SCALE:

1000 0 1000mm

SCALE: 1 = 50

UNLESS OTHERWISE NOTED, LINEAR DIMENSIONS SHOWN ARE IN MILLIMETERS.

SYMBOL	DESCRIPTION	DATE	APP.

Designed By: R. BROWN
Drawn By: D. GRIFFIN
Checked By: R. BROWN
Date: 10 MAY 2007
File No. AF0707
I.S.O. Sheet File Name: AF0707DB-AR03PN.dwg
Solicitation Number: –
B. THOMAS

US Army Corps of Engineers Transatlantic Programs Center

ANA REGIONAL BRIGADE
PAKTIKA, AFGHANISTAN
INTERPRETER FACILITIES
MWR

ROOF PLAN

SHEET REFERENCE NUMBER:

DB–A–03

$DATE$
$FILE$

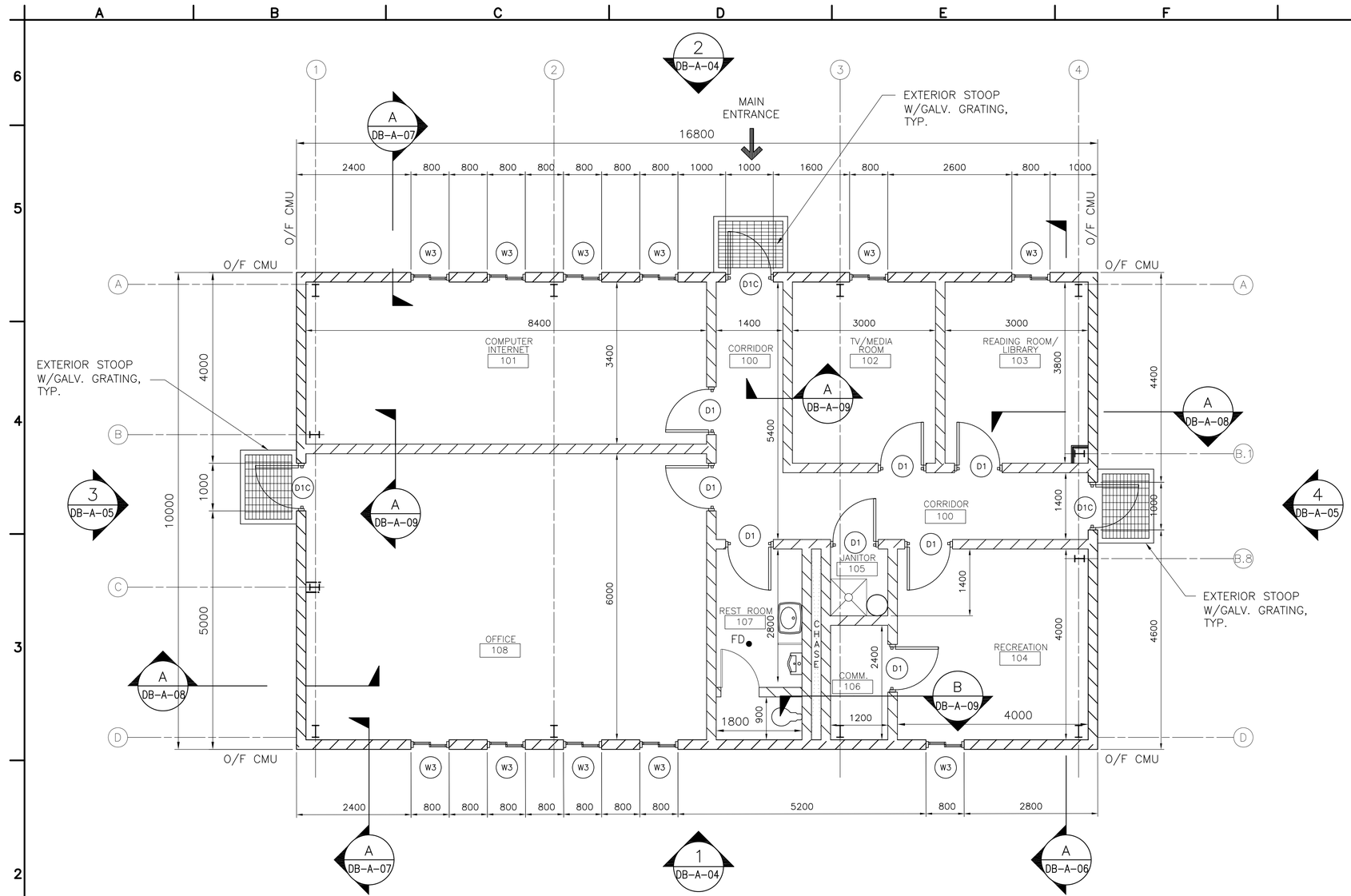

MWR – FLOOR PLAN

SCALE: 1:50

WALL SYMBOL:

CMU WALL

NOTES:

1– ALL WALLS ARE 200MM THK. CMU UNLESS NOTED OTHERWISE.

2– ALL WALLS TERMINATE AT CEILING UNLESS NOTED OTHERWISE. REF. STRUCT. DRWGS.

3– ALL DOOR JAMBS ARE 200MM UNLESS OTHERWISE NOTED.

4– ALL DIMENSIONS ARE TO FACE OF CMU UNLESS NOTED OTHERWISE.

5– ALL VERTICAL DIMENSIONS & LEVELS ARE FROM GROUND FLOOR FINISHED SLAB. THIS ELEVATION IS +0000.

6– NOT USED.

7– SEE STRUCTURAL DRAWINGS FOR LOCATION OF BUILDING CONTROL, EXPANSION AND SEISMIC JOINTS.

8– ALL HVAC OPENINGS DIMENSION SHALL BE VERIFIED WITH APPROVED SUBMITTALS.

SYMBOL	DESCRIPTION	DATE	APP.

Designed By: R. BROWN
Drawn By: D. GRIFFIN
Checked By: R. BROWN
B. THOMAS

Date: 10 MAY 2007
File No. AF0707
I.S.O. Sheet File Name: AF0707DB-AR01PN.dwg
Solicitation Number: –

US Army Corps of Engineers Transatlantic Programs Center

ANA REGIONAL BRIGADE
PAKTIKA, AFGHANISTAN
INTERPRETER FACILITIES
MWR

FLOOR PLAN

SHEET REFERENCE NUMBER:
DB–A–01

GRAPHIC SCALE:

1000 0 1000mm
SCALE: 1 = 50

UNLESS OTHERWISE NOTED, LINEAR DIMENSIONS SHOWN ARE IN MILLIMETERS.

$DATE$
$FILE$

ARCHITECTURAL ABBREVIATIONS

A	
ABOVE FINISH FLOOR	AFF
ACCESS PANEL	AP
ACOUSTIC	ACOUS (ACST)
ACTIVE LEAF	A/L
AGGREGATE	AGG
AIR CONDITIONING	A/C
ALUMINUM	ALUM (AL)
ANCHOR BOLT	AB
AND	&
ANGLE	∠ (ANG)
ARCHITECTURAL	ARCH
AREA INLET	AI.
ASPHALT	ASPH
AT	@
AUTOMATIC	AUTO
B	
BACK OF WALL	BOW
BATTEN INSULATION	BATT INSUL
BEAM	BM
BEARING	BRG
BITUMINOUS	BIT (BITUM)
BLOCK	BLK
BLOCKING	BLKG
BOARD	BD
BOTTOM	BOT (BOTT)
BRACING	BRCG
BRACKET	BRKT
BUILDING	BLDG
C	
CABINET	CAB
CAST IRON	CI
CATCH BASIN	CB
CEILING	CLG
CEMENT	CEM
CENTER	CTR
CENTER LINE	℄ OR CL
CENTER TO CENTER	CC
CERAMIC TILE	CT
CIRCULAR	CIR
CLEANOUT	CO
CLEAR	CLR
CLOSET	CLO
COLUMN	COL
CONCRETE	CONC
CONCRETE MASONRY UNITS	CMU
CONNECTION	CONN
CONSTRUCTION	CONSTR
CONSTRUCTION JOINT	CONSTR JT
CONTINUOUS	CONT.
CONTROL JOINT	CJ
CORNER	COR
CORRIDOR	CORR
COUNTER	CNTR
COUNTER SUNK	CSK
D	
DAMPPROOFING	DP
DETAIL	DET (DETL)
DIAGONAL	DIAG
DIAMETER	DIA
DIMENSION	DIM
DISPENSER	DISP
DOOR	DR
DOUBLE	DBL
DOWN	DN
DRAWER	DWR
DRAWING	DWG
DRINKING FOUNTAIN	DF
E	
EACH	EA
ELECTRICAL OR ELECTRIC	ELEC
ELEVATION	EL.
EMERGENCY	EMERG
ENCLOSURE	ENCL
ENTRANCE	ENTR
EQUIPMENT	EQUIP (EQPT)
EQUAL	EQ
EXHAUST	EXH
EXISTING	EXIST.
EXPANSION	EXPN
EXPANSION JOINT	EJ (EXP JT)
EXTERIOR	EXT
F	
FACE OF CONCRETE	FOC
FACE OF FINISH	FOF
FACE OF MASONRY	FOM
FACE OF WALL	FOW
FINISH	FIN.
FIRE HYDRANT	FH
FIXTURE	FIX
FLASHING	FLASH
FLOOR	FLR OR FL
FLOOR DRAIN	FD
FLOORING	FLG
FOOTING	FTG
FOUNDATION	FDN
FRAME	FR
FINISH FLOOR LINE	FFL
FIRE EXTINGUISHER	FE
G	
GAGE OR GAUGE	GA
GALVANIZED	GALV
GALVANIZED IRON	GI
GAS	G
GRID LINE	GL
GLAZED WALL TILE	GWT
GRADE	GR
GROUND	GND
GROUND CLEANOUT	GCO
GYPSUM	GYP
GYPSUM WALLBOARD	GYP BD (GWB)
H	
HANDRAIL	HDR
HARDBOARD	HBD
HARDWARE	HDW (HW)
HEAD	HD
HEATER	HTR
HEIGHT	HT (HGT)
HIGH POINT	H.PT.
HOLLOW METAL	HM
HORIZONTAL	HORIZ
HOSE BIBB	HB
I	
INSIDE DIAMETER	I.D.
INSULATION	INSUL.
INTERIOR	INT (INTR)
J	
JANITOR	JAN
JOINT	JT
JOIST	JST
K	
KEY LOCK	KL
KICK PLATE	KP
L	
LABORATORY	LAB
LAMINATE	LAM
LAVATORY	LAV
LIGHT	LT
LIGHTING	LTG
LOW POINT	LP
LUMBER	LBR
LOUVER	LVR
M	
MACHINE	MACH
MAINTENANCE	MAINT
MASONRY OPENING	MO
MASONRY UNIT	MU
MASTIC	MSTC
MATERIAL	MATL
MAXIMUM	MAX
MECHANICAL	MECH
METAL	MET
METAL BUILDING MANUFACTURER	MBM
MINIMUM	MIN
MIRROR	MIR
MISCELLANEOUS	MISC
MONOLITHIC	MONO
N	
NORTH	N
NOT IN CONTRACT	NIC
NUMBER	NO. (#)
NOT TO SCALE	NTS
O	
OFFICE	OFF.
ON CENTER	OC
OPENING	OPNG
OPPOSITE	OPP
OUTSIDE DIAMETER	O.D.
P	
PANEL	PNL
PAPER TOWEL DISPENSER	PTD
PAPER TOWEL DISPENSER & RECEPTACLE	PTD/R
PAPER TOWEL RECEPTACLE	PTR
PARTITION	PRTN
PLASTER	PLAST
PLATE	PL OR P
PLUMBING	PLBG
PLYWOOD	PLY WD
PRECAST	PRCST
Q	
QUARRY TILE	Q.T.
QUARTERS	QTRS
R	
RADIUS	RAD
RECEPTACLE	RECP
REFERENCE	REF
REFRIGERATOR	REFR
REINFORCEMENT	REINF
REQUIRED	REQD
REVISIONS	REV
RISER	R
ROOFING	RFG
ROOM	RM
ROUGH	RGH
S	
SANITARY NAPKIN DISPENSER	SND
SANITARY NAPKIN RECEPTACLE	SNR
SCHEDULE	SCH
SEAT COVER DISPENSER	SCD
SERVICE SINK	SSK
SHEATHING	SHTHG
SHEET	SHT.
SHEET METAL	SHT. MET.
SHOWER	SHR
SIMILAR	SIM
SOAP DISPENSER	SD
SOLID CORE	SC
SOUTH	S
SPEAKER	SPKR
SPECIFICATION	SPEC
SPLASH BLOCK	SB
SQUARE	SQ OR ◻
STANDARD	STD
STEEL	STL
STORAGE	STOR
STRUCTURAL	STRL
SUSPENDED	SUSP
SYMMETRICAL	SYM
T	
TELEPHONE	TEL
TEMPERATURE	TEMP
TEMPERED GLASS	T
TERRAZZO	TER
THICK	THK
TOILET PAPER DISPENSER	TPD
TOP OF CONCRETE	TOC
TOP OF CURB	TC
TOP OF PAVEMENT	TP
TOP OF STEEL	TOS
TOP OF WALL	TW
TOPOGRAPHY	TOPO
TYPICAL	TYP
U	
UNLESS OTHERWISE NOTED	UON
URINAL	UR
V	
VENTILATOR	VENT
VENT THRU ROOF	VTR
VERTICAL	VERT
VESTIBULE	VEST
W	
WATER CLOSET	WC
WEIGHT	WT
WELDED WIRE FABRIC	WWF
WINDOW	W/
WITH	W/
WITHOUT	W/O
WOOD	WD

SYMBOLS

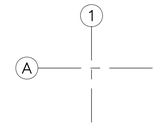

GRID LINES

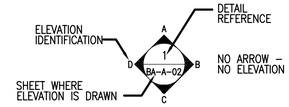

INTERIOR ELEVATION

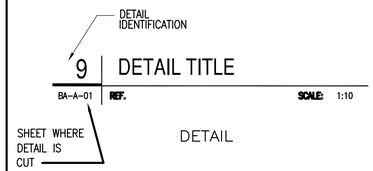

DETAIL

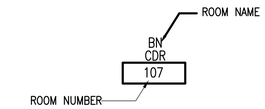

ROOM IDENTIFICATION

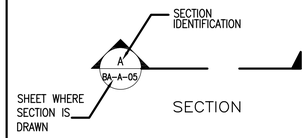

SECTION

DOOR NUMBER

WINDOW NUMBER

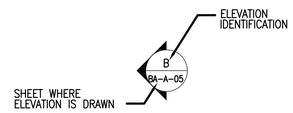

EXTERIOR ELEVATION

LOUVER NUMBER

MATERIAL LEGEND

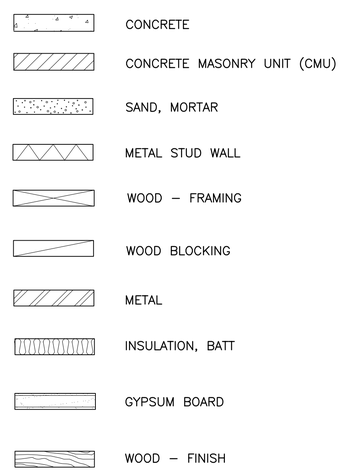

GENERAL NOTES:

UNLESS OTHERWISE NOTED, LINEAR DIMENSIONS SHOWN ARE IN MILLIMETERS.

SYMBOL	DESCRIPTION	DATE	APP.

Designed By: R. BROWN
Date: 10 MAY 2007
Drawn By: D. GRIFFIN
File No. AF0707
Checked By: R. BROWN
I.S.O. Sheet File Name: A0707DB-AB01.dwg
B. THOMAS
Solicitation Number: –

US Army Corps of Engineers Transatlantic Programs Center

ANA REGIONAL BRIGADE
PAKTIKA, AFGHANISTAN
INTERPRETER FACILITIES
MWR
ABBREVIATIONS & SYMBOLS
–

SHEET REFERENCE NUMBER:
DB–A–00

$DATE$
$FILE$

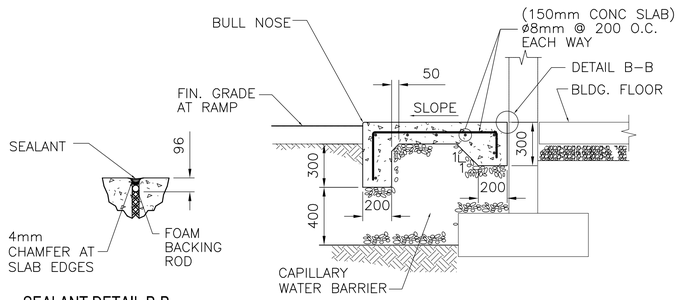

SEALANT DETAIL B-B

SECTION A-A

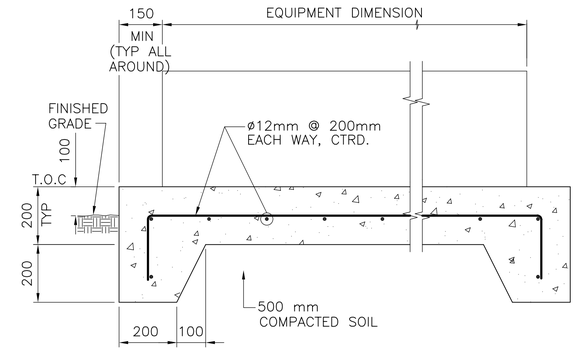

TYPICAL ALL AROUND PERIMETER

NOTE:
PAD DIMENSIONS, ANCHOR BOLT SIZE AND LOCATIONS, AND OTHER EMBEDDED ITEMS SHALL CONFORM TO EQUIPMENT MANUFACTURER'S REQUIREMENTS.

2 | CONCRETE PAD FOR EXTERIOR EQUIPMENT

DB–SS–04 | REF. | SCALE: 1:10

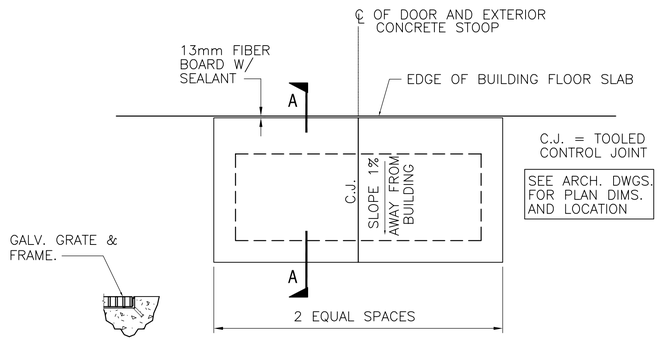

DETAIL D-D

EXTERIOR STOOPS

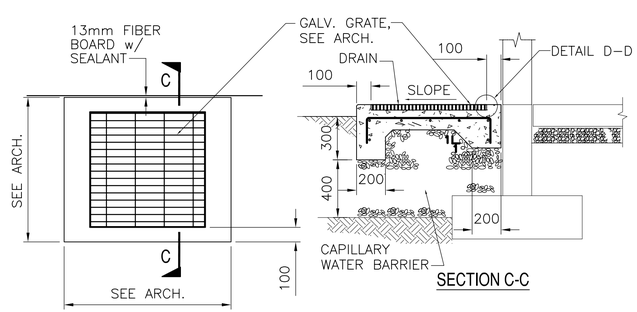

SECTION C-C

EXTERIOR STOOPS w/ GALVANIZED GRATE

1 | CONCRETE STOOP/RAMP DETAILS

DB–SS–04 | REF. | SCALE: 1:20

200 0 200mm
SCALE: 1 = 10

UNLESS OTHERWISE NOTED, LINEAR DIMENSIONS SHOWN ARE IN MILLIMETERS.

SYMBOL	DESCRIPTION	DATE	APPR.

Designed By: D. SMITH
Drawn By: D. SMITH
Checked By: M. THOMPSON
Date: 10 MAY 2007
File No: AF0707
I.S.D. Sheet File Name: AF0707DB–SS04DT.DWG
Solicitation Number: –

US Army Corps of Engineers Transatlantic Programs Center

ANA REGIONAL BRIGADE
PAKTIKA, AFGHANISTAN
INTERPRETER FACILITIES
MWR

MISCELLANEOUS EXTERIOR CONCRETE PAD DETIALS

SHEET REFERENCE NUMBER:
DB–SS–04

$DATE$
$FILE$

D SIZE BORDER
32 X 20.5

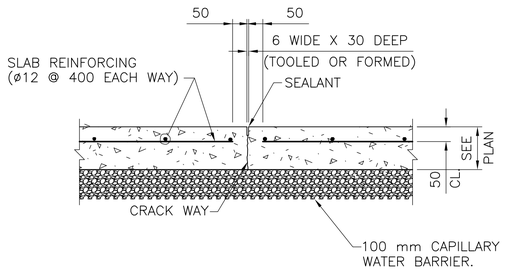

1 SLAB ON GRADE OR PAVEMENT CONTROL JOINT

DC-SS-03 REF. SCALE: 1:10

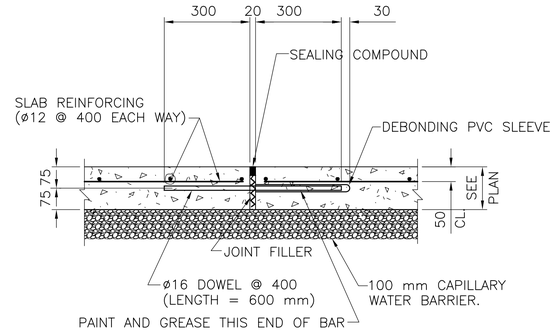

2 PAVEMENT EXPANSION JOINT

DC-SS-03 REF. SCALE: 1:10

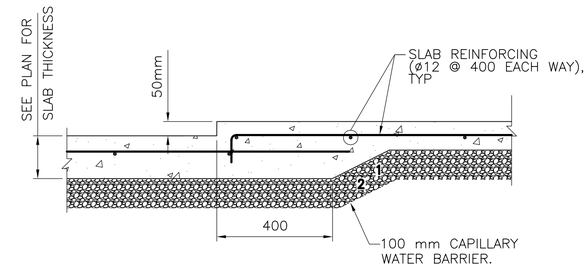

3 DEPRESSED SLAB DETAIL

DC-SS-03 REF. SCALE: 1:10

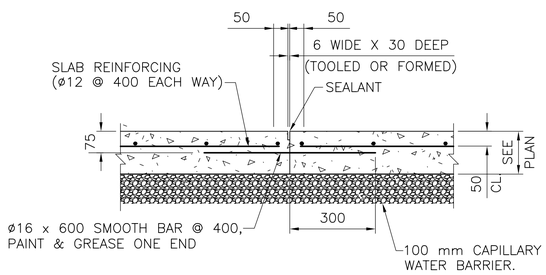

4 SLAB ON GRADE OR PAVEMENT CONSTRUCTION JOINT

DC-SS-03 REF. SCALE: 1:10

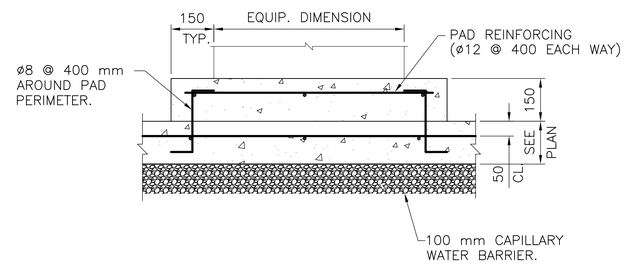

5 INTERIOR EQUIPMENT PAD DETAIL

DC-SS-03 REF. SCALE: 1:10

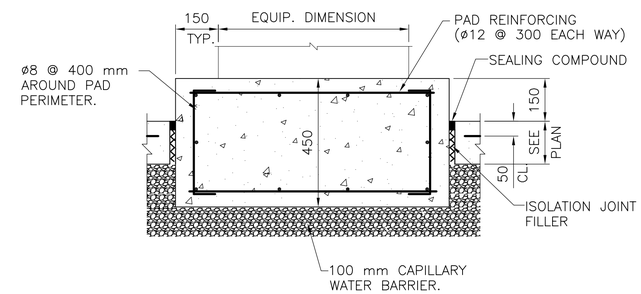

6 LARGE EQUIPMENT ISOLATION PAD DETAIL

DC-SS-03 REF. SCALE: 1:10

200 0 200mm
SCALE: 1 = 10

UNLESS OTHERWISE NOTED, LINEAR DIMENSIONS SHOWN ARE IN MILLIMETERS.

SYMBOL	DESCRIPTION	DATE	APP

Designed By: D. SMITH
Date: 10 MAY 2007
Drawn By: D. SMITH
File No: AF0707
Checked By: M. THOMPSON
I.S.O. Sheet File Name: AF0707DC-SS03DT.DWG
Solicitation Number: –

US Army Corps of Engineers
Transatlantic Programs Center

ANA REGIONAL BRIGADE
PAKTIKA, AFGHANISTAN
INTERPRETER FACILITIES
DFAC 3

TYPICAL SLAB ON GRADE DETAILS

SHEET REFERENCE NUMBER:
DC-SS-03

$DATE$
$FILE$

D SIZE BORDER
32 X 20.5

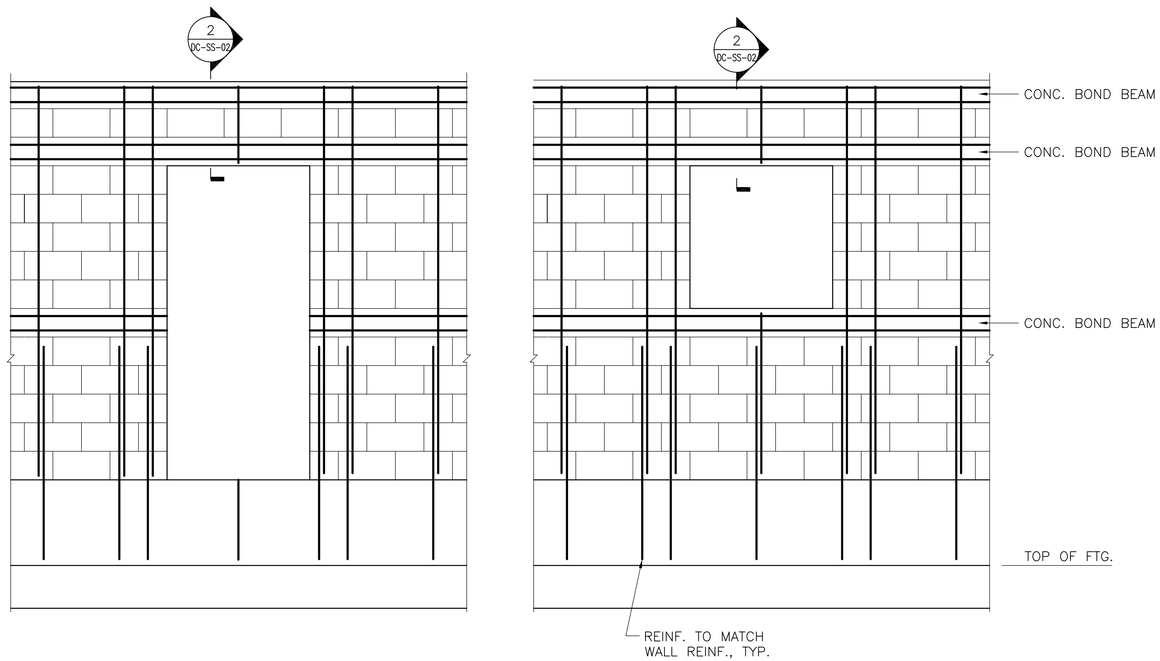

1 | CMU WALL PARTIAL ELEVATION

DC-SS-02 | REF. | SCALE: 1:20

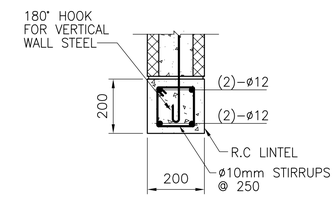

2 | LINTEL SECTION

DC-SS-02 | REF. | SCALE: 1:10

200 0 200mm
SCALE: 1 = 10

UNLESS OTHERWISE NOTED, LINEAR DIMENSIONS SHOWN ARE IN MILLIMETERS.

SYMBOL	DESCRIPTION	DATE	APR

Designed By:
Drawn By:
Checked By:
Date: 10 MAY 2007
File No: AF0707
I.S.O. Sheet File Name: AF0707DC-SS02DT.DWG
Solicitation Number: –

US Army Corps of Engineers Transatlantic Programs Center

ANA REGIONAL BRIGADE
PAKTIKA, AFGHANISTAN
INTERPRETER FACILITIES
DFAC 3

TYPICAL MASONRY DETAILS

SHEET REFERENCE NUMBER:
DC-SS-02

$DATE$
$FILE$

D SIZE BORDER
32 X 20.5

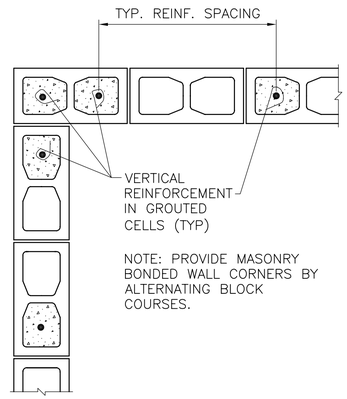

1 TYPICAL CMU CORNER WALL REINFORCING DETAIL

DC-SS-01 REF. SCALE: 1:10

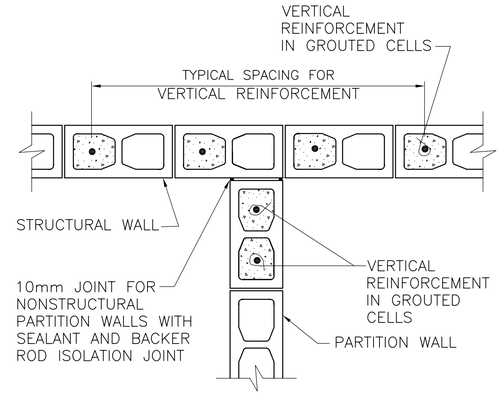

2 TYPICAL CMU PARTITION WALL REINFORCING DETAIL

DC-SS-01 REF. SCALE: 1:10

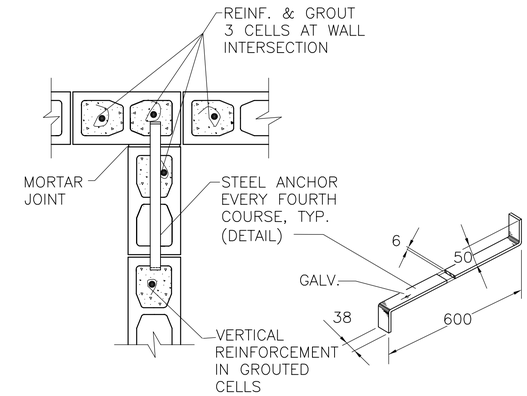

3 TYPICAL CMU STRUCTURAL WALL REINFORCING DETAIL

DC-SS-01 REF. SCALE: 1:10

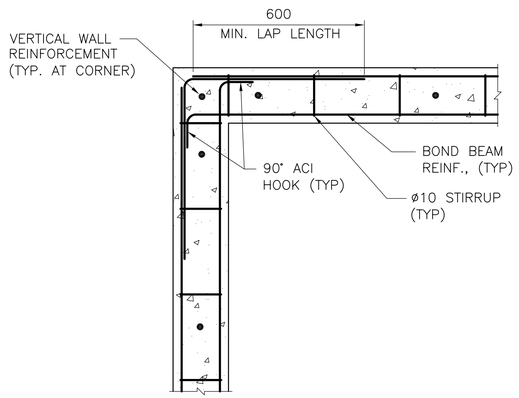

4 TYPICAL CIP CONCRETE BOND BEAM REINFORCING DETAIL

DC-SS-01 REF. SCALE: 1:10

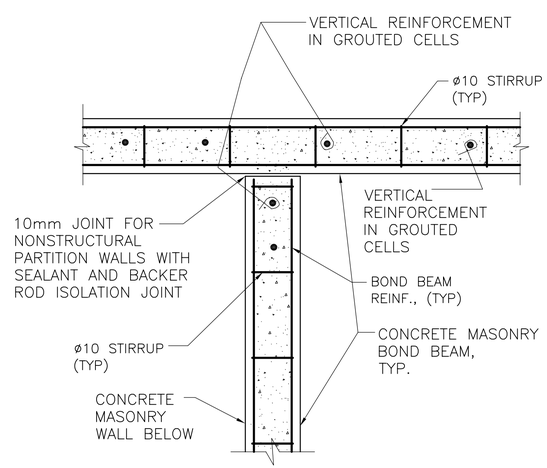

5 TYPICAL CIP CONCRETE BOND BEAM REINFORCING DETAIL

DC-SS-01 REF. SCALE: 1:10

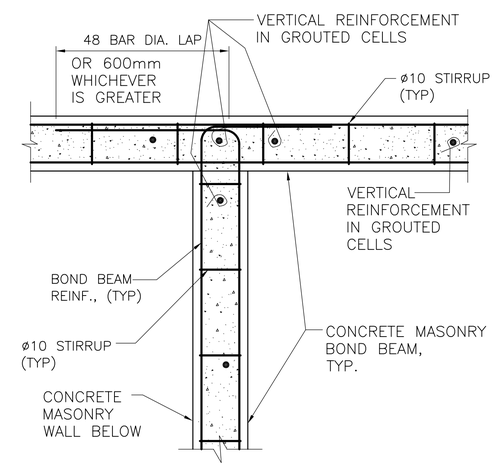

6 TYPICAL CIP CONCRETE BOND BEAM REINFORCING DETAIL

DC-SS-01 REF. SCALE: 1:10

200 0 200mm
SCALE: 1 = 10

UNLESS OTHERWISE NOTED, LINEAR DIMENSIONS SHOWN ARE IN MILLIMETERS.

SYMBOL	DESCRIPTION	DATE	APP

Designed By:
Drawn By:
Checked By:
Date: 10 MAY 2007
File No: AF0707
I.S.O. Sheet File Name: AF0707DC-SS01DT.DWG
Solicitation Number: –

US Army Corps of Engineers
Transatlantic Programs Center

ANA REGIONAL BRIGADE
PAKTIKA, AFGHANISTAN
INTERPRETER FACILITIES
DFAC 3

TYPICAL MASONRY DETAILS

SHEET REFERENCE NUMBER:
DC-SS-01

$DATE$
$FILE$

D SIZE BORDER
32 X 20.5

GENERAL:

1. CONTRACTOR SHALL VERIFY ALL DIMENSIONS AND CONDITIONS AFFECTING THE WORK AT JOBSITE.

2. ALL STRUCTURAL WORK AND MATERIALS SHALL CONFORM TO THE REQUIREMENTS OF THE PROJECT SPECIFICATIONS.

3. FOR LOCATION AND DIMENSIONS OF GROOVES, REGLETS, SLEEVES, OPENINGS, AND EMBEDDED OR ATTACHED ITEMS, REFER TO ARCHITECTURAL, MECHANICAL, ELECTRICAL, AND PIPING DRAWINGS.

CODES:

1. ALL PARTS SHALL BE FURNISHED AND ERECTED ACCORDING TO THE APPLICABLE CODES AND SPECIFICATIONS OF THE FOLLOWING:

AMERICAN CONCRETE INSTITUTE	(ACI)
AMERICAN INSTITUTE OF STEEL CONSTRUCTION	(AISC)
AMERICAN IRON AND STEEL INSTITUTE	(AISI)
AMERICAN WELDING SOCIETY	(AWS)
MINIMUM DESIGN LOADS FOR BUILDINGS AND OTHER STRUCTURES	(ASCE)
INTERNATIONAL BUILDING CODE	(IBC)

DESIGN LOADS:

1. ROOF LOADING

A. LIVE LOAD 100 KG/SQ METER (20 PSF)
B. SNOW LOAD 75 KG/SQ METER (15 PSF)
C. COLLATERAL LOAD 50 KG/SQ METER (10 PSF)

2. WIND LOADING

A. BASIC WIND SPEED 145 KM/HR (90 MPH)
B. EXPOSURE CATEGORY "B"
C. IMPORTANCE FACTOR, Iw = 1.00
D. BUILDING CATEGORY "II"
E. MAX. FRAME DRIFT DUE TO 10-YEAR WIND = H/200

3. SEISMIC LOADING:

A. Ss = 1.28g
B. S1 = 0.51g
C. SEISMIC USE GROUP "I"
D. SITE CLASSIFICATION "D"
E. IMPORTANCE FACTOR I = 1.0

BASIC SEISMIC FORCE RESISTING SYSTEM:

CANTILEVER CMU WALL SYSTEM WITH INTERMEDIATE STEEL MOMENT FRAMES

DESIGN BASE SHEAR: 0.34W FOR CMU CANTILEVER WALLS.
0.19W FOR INTERMEDIATE STEEL MOMENT FRAMES.

ANALYSIS PROCEDURE: EQUIVALENT LATERAL FORCE METHOD

FOUNDATIONS:

1. ALL FOOTINGS SHALL BEAR ON SOIL CAPABLE OF SUSTAINING THE LOADS.

2. CONTINUOUS WALL FOOTINGS WERE DESIGNED FOR A SOIL BEARING CAPACITY OF 9765 KG/SQ. METER (2000 PSF). ISOLATED COLUMN FOOTINGS WERE DESIGNED FOR A MAXIMUM BEARING CAPACITY OF 9765 KG/SQ. METER (2000 PSF).

3. ELEVATIONS SHOWN ON PLANS FOR TOP OF FOOTINGS ARE MINIMUM DEPTH. DIFFERENT OR UNUSUAL CONDITIONS SHALL BE REPORTED TO THE CONTRACTING OFFICER.

4. ALL FOOTING REINFORCEMENT SHALL BE SECURELY SUPPORTED ABOVE GROUND. CONCRETE BLOCK AND BROKEN TILE SHALL NOT BE USED. CONCRETE OR CLAY BRICK MAY BE USED.

CONCRETE:

1. STRUCTURAL CONCRETE FOR THE BUILDING STRUCTURE SHALL HAVE THE FOLLOWING PROPERTIES:

FOOTINGS: f'c = 210 KG/SQ. CM (3,000 PSI) AT 28 DAYS
SLABS: f'c = 210 KG/SQ. CM (3,000 PSI) AT 28 DAYS

2. ALL REINFORCING STEEL SHALL BE DEFORMED BARS CONFORMING TO ASTM A615 GRADE 60 UNLESS NOTED OTHERWISE.

3. LOCATION OF ALL CONCRETE JOINTS, OTHER THAN THOSE SPECIFIED, SHALL BE APPROVED BY THE CONTRACTING OFFICER BEFORE CONCRETE PLACEMENT.

4. MINIMUM PROTECTIVE COVER OF REINFORCEMENT (SEE DETAILS) SHALL BE AS FOLLOWS:

FOOTINGS, 75mm CLEAR BOTTOM AND SIDES, 40mm CLEAR TOP.
CONCRETE SLABS-ON-GRADE, 25mm CLEAR TOP.
WALLS, 40mm CLEAR SIDES.
CONCRETE PIERS, 40mm CLEAR TO TIES.

5. MINIMUM CONCRETE SPLICES AND HOOKS FOR REINFORCING STEEL SHALL CONFORM TO ACI 318, CURRENT EDITION.

6. CONCRETE WORK SHALL BE COORDINATED WITH DRAINS, UNDERGROUND UTILITIES, MECHANICAL, ELECTRICAL, AND ARCHITECTURAL PLANS. CONCRETE SHALL NOT BE CAST UNTIL THESE ITEMS HAVE BEEN INSTALLED AND ACCEPTED.

7. CONCRETE FINISHES SHALL BE PROVIDED AS DESCRIBED IN THE SPECIFICATIONS.

8. CORNER BARS SHALL BE PROVIDED AT ALL INTERSECTIONS; BAR SIZE AND SPACING TO MATCH LARGER BAR.

9. SLABS ON GRADE SHALL BE REINFORCED AT ALL PENETRATIONS AND RE-ENTRANT CORNERS. PLACE 3-ø10 x 1.0 METER AROUND FLOOR DRAINS. PLACE 2-ø12 x 1.0 METER (MINIMUM) AT RE-ENTRANT CORNERS.

STRUCTURAL STEEL:

1. STRUCTURAL STEEL SHALL BE FABRICATED AND ERECTED IN ACCORDANCE WITH THE AMERICAN INSTITUTE OF STEEL CONSTRUCTION, "SPECIFICATION FOR STRUCTURAL STEEL BUILDINGS", 1989 (AISC ASD MANUAL, 9TH EDITION).

2. STEEL SHALL CONFORM TO THE FOLLOWING REQUIREMENTS UNLESS NOTED OTHERWISE:

MISCELLANEOUS PLATES AND ANGLES - ASTM A36 (Fy = 36 KSI)
RECTANGULAR HSS - ASTM A500, GRADE B (Fy = 46 KSI)
"W" SHAPES - ASTM A992

3. NO STRUCTURAL STEEL SHALL BE FABRICATED OR ERECTED UNTIL SHOP DRAWINGS HAVE BEEN APPROVED.

4. NO HOLES OTHER THAN THOSE SPECIFICALLY DETAILED SHALL BE ALLOWED THROUGH STRUCTURAL STEEL MEMBERS. CUTTING OF STEEL SHALL NOT BE PERMITTED WITHOUT APPROVAL OF THE CONTRACTING OFFICER.

5. THE CONTRACTOR SHALL VERIFY ALL SHOP DRAWING DIMENSIONS WITH THE STRUCTURAL AND ARCHITECTURAL PLANS AND DETAILS, AND WITH FIELD DIMENSIONS OF COLUMN LAYOUT.

7. BOLTED CONNECTIONS SHALL BE MADE WITH HIGH STRENGTH BOLTS CONFORMING TO ASTM A325, 20mm DIAMETER MINIMUM UNLESS NOTED OTHERWISE.

8. CONNECTIONS NOT SHOWN ON DRAWINGS SHALL BE DESIGNED BY THE FABRICATOR. CONNECTIONS SHALL BE SELECTED TO SUPPORT ONE HALF THE TOTAL UNIFORM LOAD CAPACITY SHOWN IN THE ALLOWABLE LOAD TABLES, PART 2 OF LATEST AISC MANUAL FOR THE GIVEN BEAM, SPAN, AND GRADE OF STEEL SPECIFIED. WHERE POSSIBLE, DOUBLE ANGLE CONNECTIONS SHALL BE USED.

MASONRY:

1. ENGINEERED MASONRY IS DESIGNED IN ACCORDANCE WITH "BUILDING CODE REQUIREMENTS FOR MASONRY STRUCTURES" (ACI 530-99/ ASCE 5-99/TMS 402-99).

2. UNITS: ASTM C90, TYPE (I) (NORMAL WEIGHT, MOISTURE CONTROLLED) (OR EQUIVALENT DIN, ACI OR EN STANDARDS) MORTAR: ASTM C270 TYPE S (OR EQUIVALENT DIN, ACI OR EN STANDARDS)

3. FULLY GROUT ALL CELLS CONTAINING REINFORCING STEEL OR ANCHORS UNLESS NOTRED OTHERWISE.

4. USE 50 db FULL CONTACT LAP SPLICES FOR REINFORCING STEEL IN CMU WALLS UNLESS NOTED OTHERWISE.

5. SEE SPECIFICATION 04200 FOR MASONRY BLOCK. ALL VERTICAL CELLS OF MASONRY BLOCK WITH REINFORCING SHALL BE GROUTED SOLID TO FORM A COMPOSITE MASONRY AND STEEL ASSEMBLY.

6. PROVIDE AN ADDITIONAL VERTICAL REINFORCEMENT AT EACH SIDE OF INTERSECTION OF EXTERIOR WALLS, AND AT EACH SIDE OF ALL MASONRY OPENINGS GREATER THAN 250mm IN WIDTH. IN OPENINGS WIDER THAN 600mm, PROVIDE ADDITIONAL VERTICAL REINFORCEMENT IN TWO ADJACENT CELLS ON EACH SIDE OF THE OPENING. ADDED VERTICAL REINFORCEMENT SHALL BE CONTINUOUS FOR THE FULL HEIGHT OF WALL.

7. PROVIDE BOND BEAMS AT 1200mm MAXIMUM VERTICAL SPACING (EXCEPT AT RESTROOM AND SHOWER STALL PARTITION WALLS).

8. PROVIDE LINTEL ABOVE ALL MASONRY OPENINGS AS SHOWN IN DETAIL 3/SS-02.

9. PROVIDE A BOND BEAM BELOW ALL MASONRY OPENINGS AND EXTEND A MINIMUM OF 400mm BEYOND EACH SIDE OF OPENING.

UNLESS OTHERWISE NOTED, LINEAR DIMENSIONS SHOWN ARE IN MILLIMETERS.

SYMBOL	DESCRIPTION	DATE	APP.

Designed By:
Drawn By:
Checked By:
Date: 10 MAY 2007
File No. AF0707
I.S.O. Sheet File Name: AF0707DC-SS00DT.DWG
Solicitation Number: -

US Army Corps of Engineers
Transatlantic Programs Center

ANA REGIONAL BRIGADE
PAKTIKA, AFGHANISTAN
INTERPRETER FACILITIES
DFAC 3

TYPICAL MASONRY DETAILS

SHEET REFERENCE NUMBER:
DC-SS-00

$DATE$
$FILE$

D SIZE BORDER
32 X 20.5

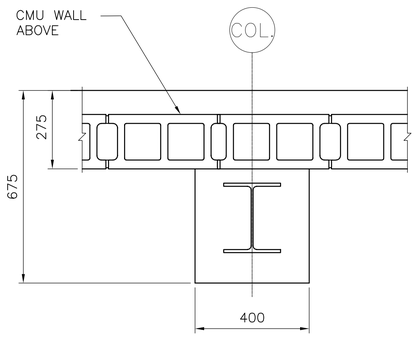

(SLAB LEVEL)

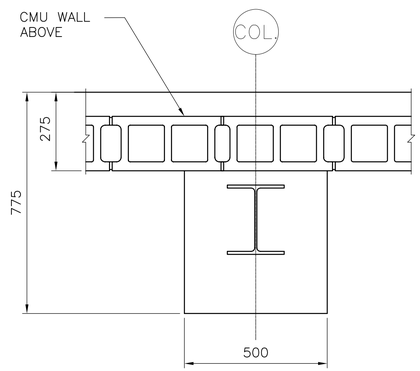

(SLAB LEVEL)

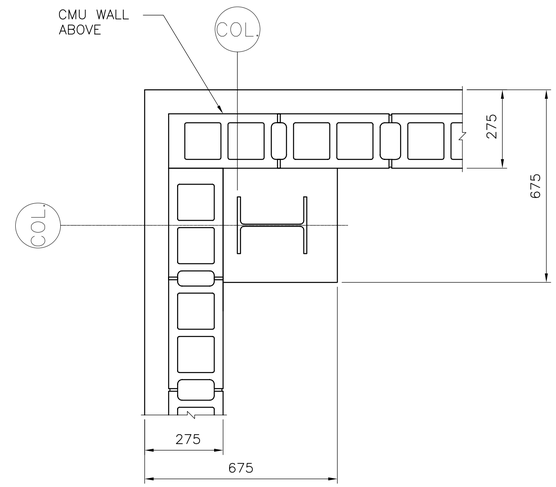

(SLAB LEVEL)

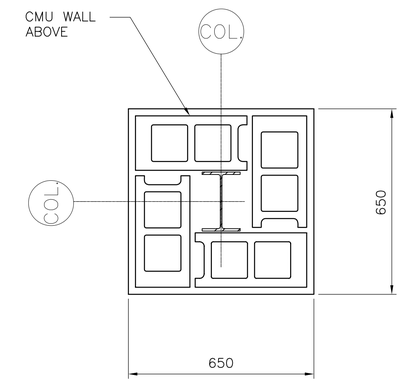

(SLAB LEVEL)

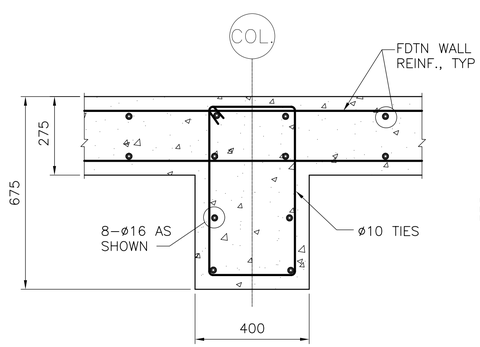

(FOUNDATION LEVEL)

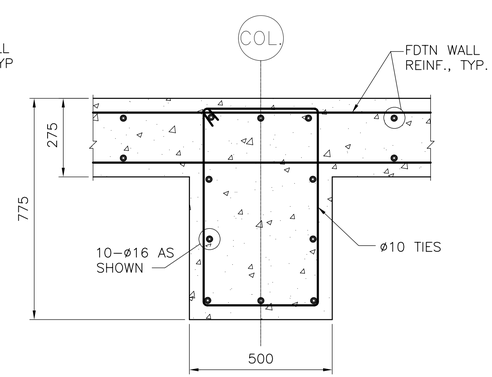

(FOUNDATION LEVEL)

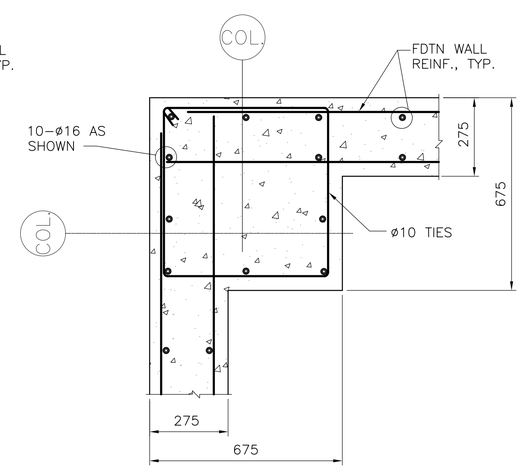

(FOUNDATION LEVEL)

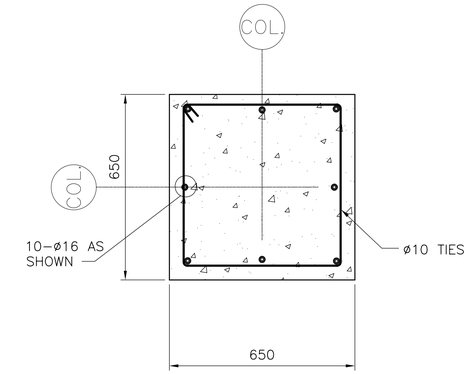

(FOUNDATION LEVEL)

- PEDESTAL P1

DC–S–01 | REF. | SCALE: 1:10

- PEDESTAL P2

DC–S–01 | REF. | SCALE: 1:10

- PEDESTAL P3

DC–S–01 | REF. | SCALE: 1:10

- PEDESTAL P4

DC–S–01 | REF. | SCALE: 1:10

200 0 200mm
SCALE: 1 = 10

UNLESS OTHERWISE NOTED, LINEAR DIMENSIONS SHOWN ARE IN MILLIMETERS.

SYMBOL	DESCRIPTION	DATE	APP

Designed By: M. THOMPSON
Date: 10 MAY 2007
Drawn By: D. SMITH
File No: AF0707
Checked By: M. THOMPSON
I.S.O. Sheet File Name: AF0707DC–SB04SE.DWG
Solicitation Number: –

US Army Corps of Engineers
Transatlantic Programs Center

ANA REGIONAL BRIGADE
PAKTIKA, AFGHANISTAN
INTERPRETER FACILITIES
DFAC 3
COLUMN
PEDESTAL DETAILS

SHEET REFERENCE NUMBER:
DC–S–04

$DATE$
$FILE$

D SIZE BORDER
32 X 20.5

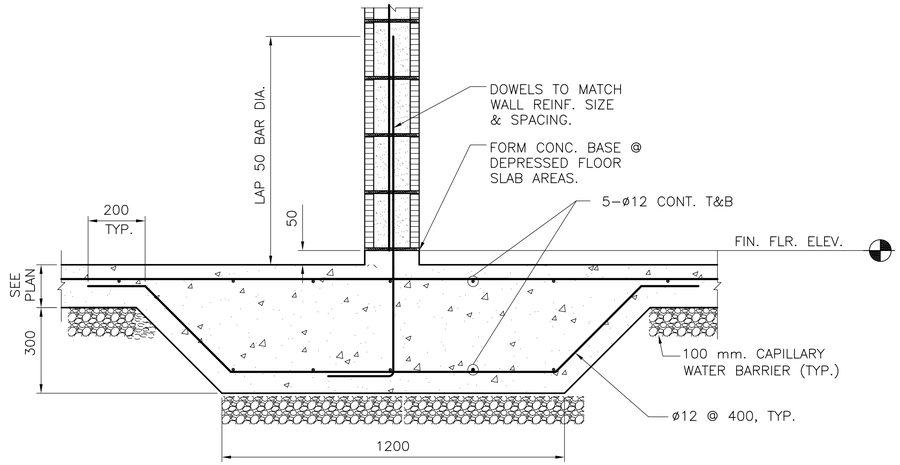

1 SECTION AT INTERIOR WALL

DC–S–01 REF. SCALE: 1:10

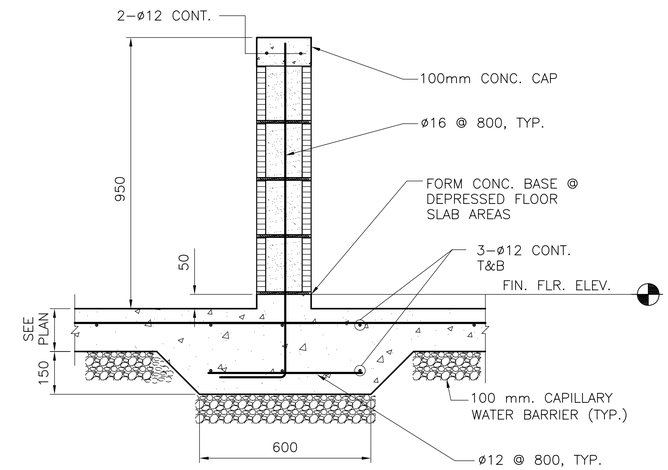

2 SECTION AT SERVING LINE PARTITION WALL

CE–S–01 REF. SCALE: 1:10

200 0 200mm
SCALE: 1 = 10

UNLESS OTHERWISE NOTED, LINEAR DIMENSIONS SHOWN ARE IN MILLIMETERS.

SYMBOL	DESCRIPTION	DATE	APR

Designed By: D. SMITH
Drawn By: D. SMITH
Checked By: M. THOMPSON
Date: 10 MAY 2007
File No: AF0707
I.S.D. Sheet File Name: AF0707DC–SB03SE.DWG
Solicitation Number: –

US Army Corps of Engineers
Transatlantic Programs Center

ANA REGIONAL BRIGADE
PAKTIKA, AFGHANISTAN
INTERPRETER FACILITIES
DFAC 3

THICKENED SLAB & FOUNDATION SECTIONS

SHEET REFERENCE NUMBER:
DC–S–03

$DATE$
$FILE$

D SIZE BORDER
32 X 20.5

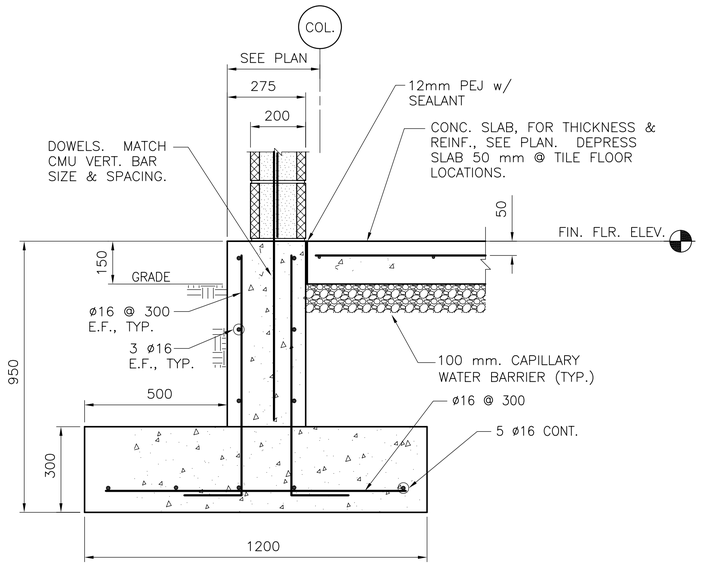

1 SECTION AT EXTERIOR CMU WALL

DC-S-01 REF. SCALE: 1:10

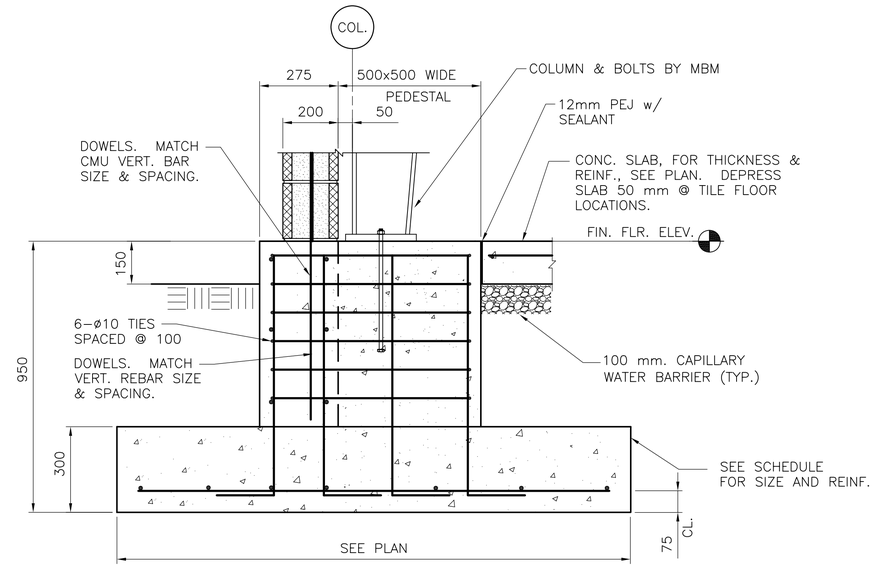

2 SECTION AT SIDEWALL COLUMN FOOTING

DC-S-01 REF. SCALE: 1:10

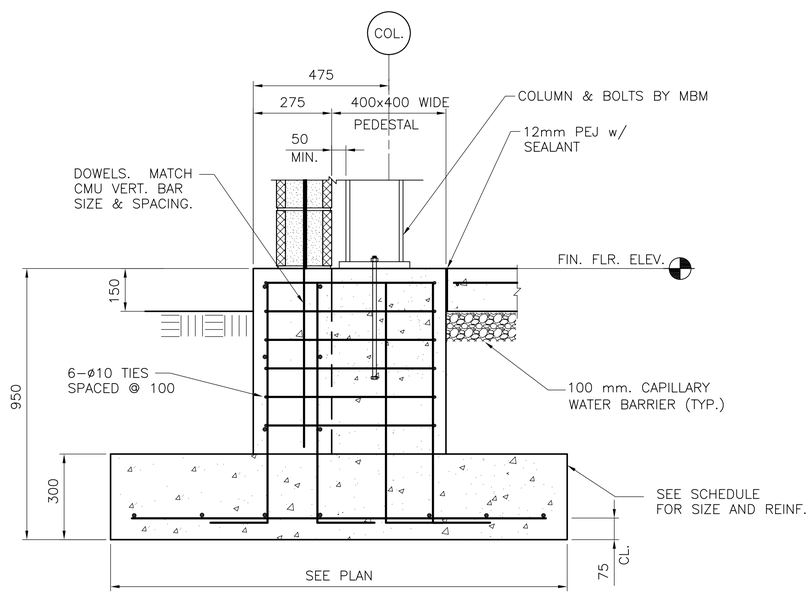

3 SECTION AT ENDWALL COLUMN FOOTING

DC-S-01 REF. SCALE: 1:10

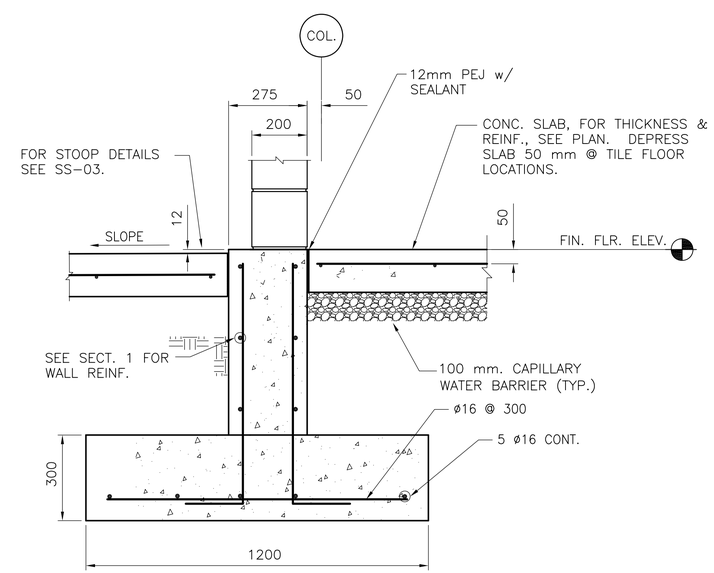

4 SECTION AT EXTERIOR DOOR

DC-S-01 REF. SCALE: 1:10

200 0 200mm
SCALE: 1 = 10

UNLESS OTHERWISE NOTED, LINEAR DIMENSIONS SHOWN ARE IN MILLIMETERS.

SYMBOL	DESCRIPTION	DATE	APR

Date: 10 MAY 2007
File No: AF0707
I.S.O. Sheet File Name: AF0707DC-SB02SE.DWG
Solicitation Number: -

Designed By:
Drawn By:
Checked By:

US Army Corps of Engineers
Transatlantic Programs Center

ANA REGIONAL BRIGADE
PAKTIKA, AFGHANISTAN
INTERPRETER FACILITIES
DFAC 3

FOUNDATION SECTIONS

SHEET REFERENCE NUMBER:
DC-S-02

$DATE$
$FILE$

D SIZE BORDER
32 X 20.5

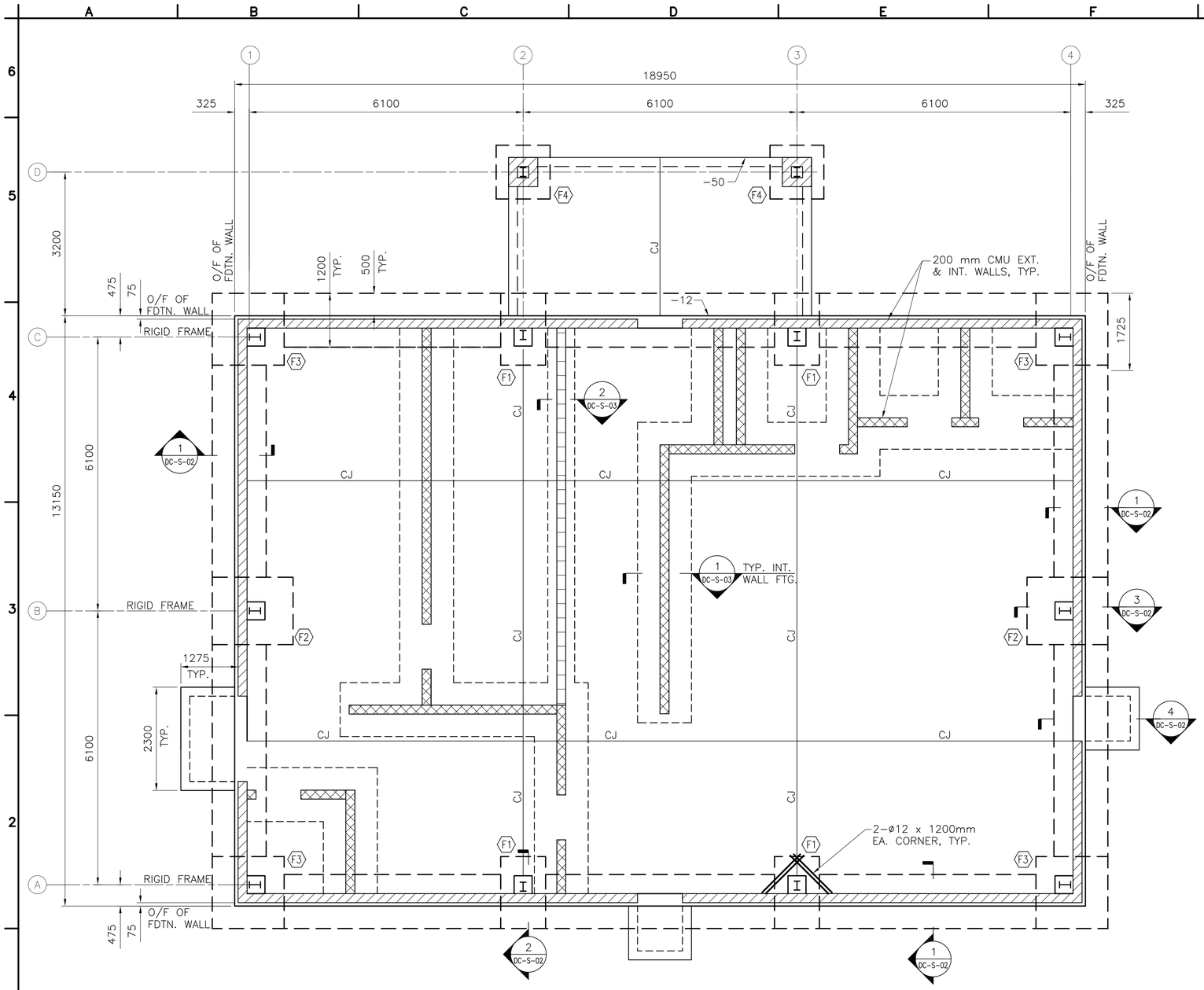

1 FOUNDATION PLAN

DC-S-01 REF. SCALE: 1:50

PRE-ENGINEERED BUILDING DESIGN REQUIREMENTS:

1. THE DESIGN SHALL BE IN ACCORDANCE WITH THE 2003 INTERNATIONAL BUILDING CODE.

2. FOR DESIGN LOADS, SEE THE GENERAL NOTES.

3. COLUMN BASE PLATES HAVE BEEN ASSUMED AS "PINNED" FOR THE FOUNDATION SHOWN.

4. LONGITUDINAL BRACE LOCATIONS HAVE BEEN SHOWN AT THE PREFERRED LOCATIONS. COORDINATE BRACE LOCATIONS WITH MECHANICAL AND ELECTRICAL EQUIPMENT.

5. THE METAL BUILDING MANUFACTURER SHALL PROVIDE THE DESIGN, FABRICATION AND DELIVERY OF ALL BUILDING ANCHOR BOLTS. THE BUILDING MANUFACTURER SHALL PROVIDE SETTING TEMPLATES FOR ALL EMBEDDED ANCHOR BOLTS. ALL ANCHOR BOLTS SHALL BE THE "HEADED" TYPE, BENT "L" BOLTS WILL NOT BE ACCEPTABLE.

6. SUBMITTAL OF SHOP DRAWINGS AND DESIGN CALCULATIONS IS REQUIRED PRIOR TO FABRICATION.

SHEET NOTES:

1. CONT. UPPER BOND BEAM 200x200 W/ 2-ø12 CONT BARS TOP & BOT.

2. CMU WALL REINFORCEMENT SHALL BE ø16 @ 600. FULLY GROUT CELLS W/ REINFORCEMENT.

3. LOCATE OUTSIDE FACE OF CMU WALLS AT 75MM FROM OUTSIDE FACE OF CONCRETE STEM WALL.

4. TOP OF CMU WALL ELEVATION SHALL BE 2.8M A.F.F.

5. REFER TO SHEET DC-SS-01 AND 02 FOR TYPICAL MASONRY DETAILS.

6. REFER TO SHEET DC-SS-03 FOR TYPICAL SLAB ON GRADE DETAILS.

7. REFER TO SHEET DC-SS-04 FOR TYPICAL EXTERIOR CONCRETE PAD DETAILS.

8. SLAB ON GRADE SHALL BE 150 MM CONCRETE ON A 100 MM CAPILLARY WATER BARRIER. SEE SHEET DC-SS-03 FOR TYPICAL SLAB REINFORCEMENT.

COLUMN FOOTING SCHEDULE

MARK	SIZE	REINFORCING	PEDESTAL MARK
F1	1000 x 1600 x 300mm	TRANSVERSE - 6 ø16 (B) LONGITUDINAL - 4 ø16 (B)	P1
F2	1500 x 1800 x 300mm	TRANSVERSE - 7 ø16 (B) LONGITUDINAL - 6 ø16 (B)	P2
F3	1600 x 1600 x 300mm	6 ø16 E.W. (B)	P3
F4	1200 x 1200 x 300mm	4 ø16 E.W. (B)	P4

NOTE: FOR PEDESTAL DETAILS AND REINFORCEMENT, SEE SHEET DC-S-04.

LEGEND:

CANTILEVERED CMU WALL ON SPREAD FOOTING; TOW AT EL. 2800

CANTILEVERED CMU WALL ON SPREAD FOOTING; TOW AT EL 2800

SERVING COUNTER PARTITION WALL ON SPREAD FOOTING. SEE ARCH. DWGS

1000 0 1000mm
SCALE: 1 = 50

UNLESS OTHERWISE NOTED, LINEAR DIMENSIONS SHOWN ARE IN MILLIMETERS.

SYMBOL	DESCRIPTION	DATE	APR

Date: 10 MAY 2007
File No: AF0707
I.S.O. Sheet File Name: AF0707DC-SB01PN.DWG
Solicitation Number: -
Designed By:
Drawn By:
Checked By:

US Army Corps of Engineers
Transatlantic Programs Center

ANA REGIONAL BRIGADE
PAKTIKA, AFGHANISTAN
INTERPRETER FACILITIES
DFAC 3

FOUNDATION PLAN

SHEET REFERENCE NUMBER:
DC-S-01

$DATE$
$FILE$

D SIZE BORDER
32 X 20.5

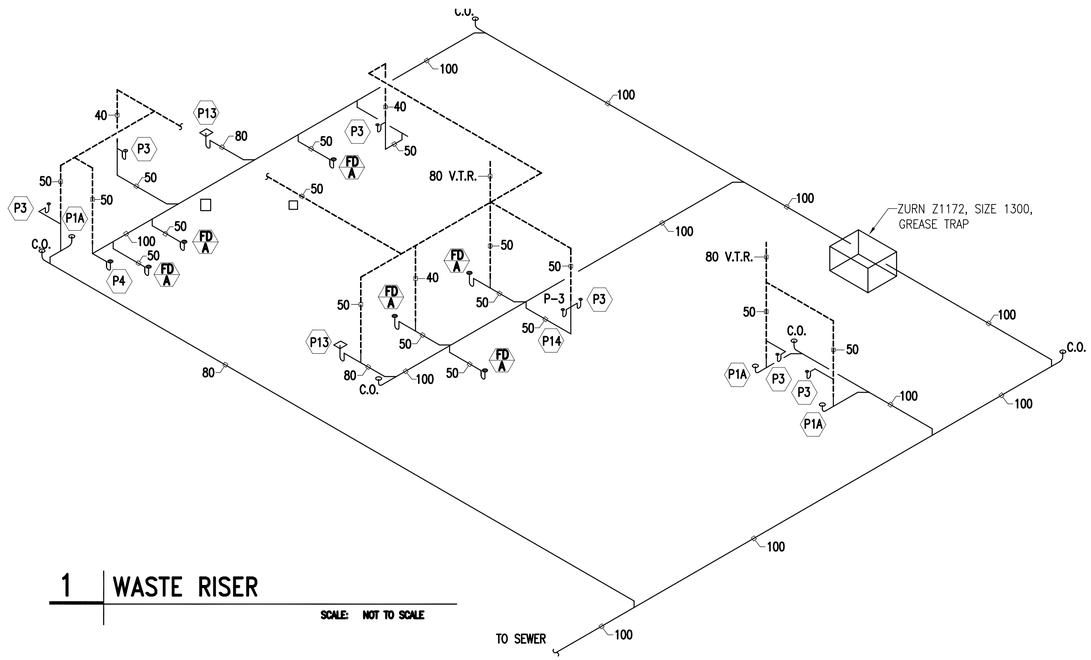

1 WASTE RISER

SCALE: NOT TO SCALE

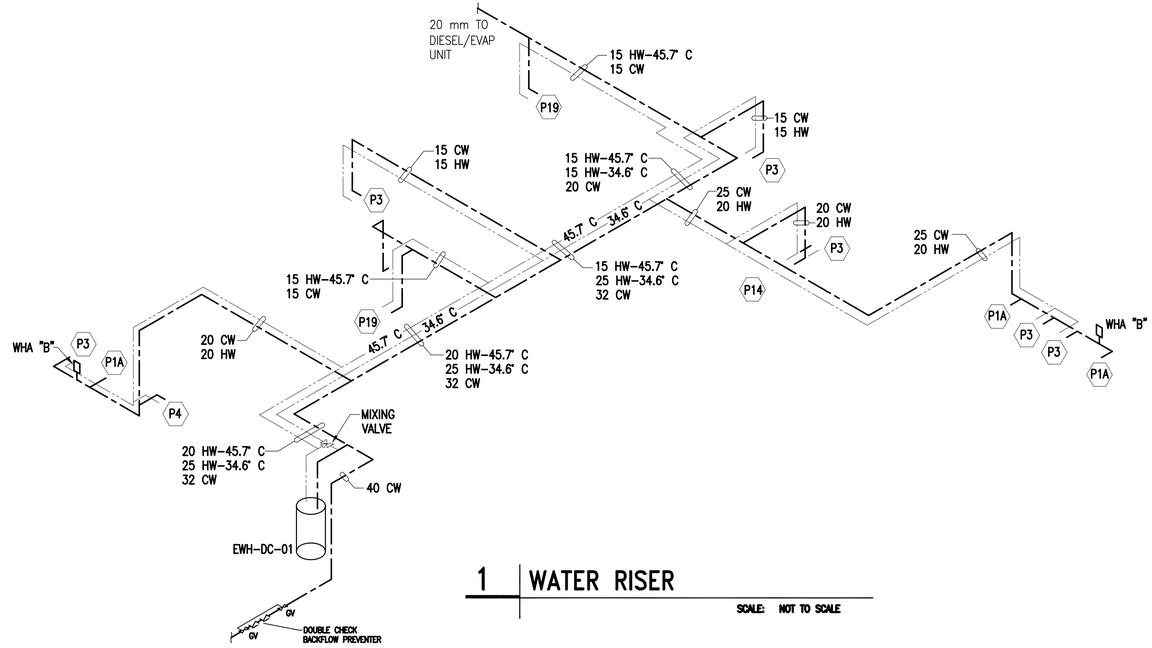

1 WATER RISER

SCALE: NOT TO SCALE

UNLESS OTHERWISE NOTED, LINEAR DIMENSIONS SHOWN ARE IN MILLIMETERS.

SYMBOL	DESCRIPTION	DATE	APP

Designed By: W.J. KNAPP
Date: 10 MAY 2007
Drawn By: W.J. KNAPP
File No: AF0707
Checked By: W.C. THAMES
I.S.D. Sheet File Name: AF0707DC-MP02IS.dwg
G.W. WHIGHAM
Solicitation Number: –

US Army Corps of Engineers
Transatlantic Programs Center

ANA REGIONAL BRIGADE
PAKTIKA, AFGHANISTAN
INTERPRETER FACILITIES
DFAC 3
PLUMBING RISERS
– –

SHEET REFERENCE NUMBER:
DC-MP-02

$DATE$
$FILE$

D SIZE BORDER
32 X 20.5

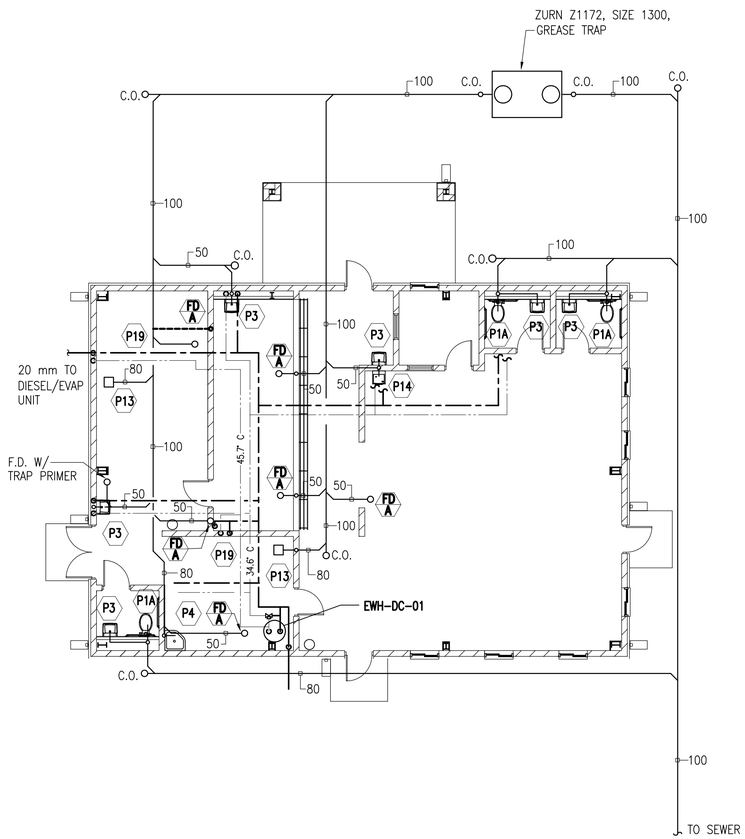

1 PLUMBING PLAN

SCALE: 1:100

PLUMBING FIXTURE SCHEDULE

FIX. No.	SYMBOL	FIXTURE NAME	PLUMBING FIXTURE SCHEDULE C.W. MM	C.W. (INCHES)	H.W. MM	H.W. (INCHES)	WASTE MM	WASTE (INCHES)	VENT MM	VENT (INCHES)	REMARKS
P1A		WESTERN WATER CLOSET (FLOOR OUTLET)	15	(1/2")	–	–	100	(4")	50	(2")	
P3		LAVATORY (WALL HUNG)	15	(1/2")	15	(1/2")	40	(1 1/2")	40	(1 1/2")	
P4		JANITOR SINK (FLOOR MOUNT JANITOR TYPE)	15	(1/2")	15	(1/2")	50	(2")	40	(1 1/2")	
P8		SERVICE SINK	15	1/2	15	1/2	80	3"	50	2"	
P11		GREASE INTERCEPTOR	–	–	–	–					SEE PLAN
P13		FLOOR SINK (FS)	–	–	–	–	80	3"	–	–	SEE PLAN
FD A		FLOOR DRAIN	–	–	–	–	50	2"	–	–	SEE PLAN ①
FCO		FLOOR CLEANOUT	–	–	–	–	80	3"	–	–	SEE PLAN ②
EWH		ELECTRIC WATER HEATER	32	(1–1/4")	32	(1–1/4")	–	–	–	–	SEE PLAN
P14		DRINKING FOUNTAIN	15	(1/2")	–	–	50	(2")	40	(1 1/2")	SEE PLAN
P19		DBL COMP SINK	15	(1/2")	15	(1/2")	40	(1 1/2")	40	(1 1/2")	

NOTES:
① SIZE OF FLOOR DRAIN WILL VARY.
② FLOOR CLEAN–OUT SHALL BE SAME SIZE AS PIPE AS SHOWN.

ELECTRIC WATER HEATER SCHEDULE

Ser No.	EWH Name	Capacity (Gallon)	Electrical Data	TEMPERATURE RISE	REMARKS
DETENTION CENTER (DC)					
30	EWH–CE–01	80 gal.	12KW/3PH/380V/50HZ	90F (50C)	6 KW UPPER & 6 KW LOWER SIMULTANEOUS OPERATION

UNLESS OTHERWISE NOTED, LINEAR DIMENSIONS SHOWN ARE IN MILLIMETERS.

SYMBOL	DESCRIPTION	DATE	APP

Designed By: W.J. KNAPP
Date: 10 MAY 2007
Drawn By: W.J. KNAPP
File No. AF0707
Checked By: W.C. THAMES
I.S.O. Sheet File Name: AF070707C–MP01PN.dwg
G.W. WHIGHAM
Solicitation Number: –

US Army Corps of Engineers
Transatlantic Programs Center

ANA REGIONAL BRIGADE
PAKTIKA, AFGHANISTAN
INTERPRETER FACILITIES
DPAC 3
PLUMBING PLAN – –

SHEET REFERENCE NUMBER:
DC–MP–01

$DATE$
$FILE$

D SIZE BORDER
32 X 20.5

PLUMBING LEGEND

SYMBOL	DESCRIPTION
AV	ANGLE VALVE
BV	BALL VALVE
CV	CHECK VALVE
	COCK VALVE
DV	DRAIN VALVE
P7	EMERGENCY SHOWER AND EYE-WASH
FCO	FLOOR CLEANOUT
FD	FLOOR DRAIN
FS	FLOOR SIPHON
P13	FLOOR SINK (FS)
	GALITRAP (GT)
GV	GATE VALVE
HB	HOSE BIBB, PLAN
	INSPECTION MANHOLE
	PIPE TURNING DOWN
	PIPE TURNING UP
CO	PLUG CLEANOUT
	REDUCER-INCREASER
	SUPPORT LOCATION
	Y-TYPE STRAINER
U	UNION
VRV	VACUUM RELIEF VALVE
WHA	WATER HAMMER ARRESTOR

ABBREVIATION	DESCRIPTION
AC	AIR COMPRESSOR
℄	CENTER LINE
CA	COMPRESSED AIR
COYB	CLEANOUT IN YARD BOX
CW	COLD WATER PIPES
DT	DAY TANK
FOR	FUEL OIL RETURN
FOS	FUEL OIL SUPPLY
FT	FLASH TANK
H/L	HIGH LEVEL
HW	HOT WATER PIPES
IC	INSPECTION CHAMBER
I.L	INVERT LEVEL
LD	LEAK DETECTOR
L/L	LOW LEVEL
LSH	LEVEL SWITCH HIGH
LSHH	LEVEL SWITCH HIGH HIGH
LSL	LEVEL SWITCH LOW
LSLL	LEVEL SWITCH LOW LOW
LT	LEVEL TRANSMITTER
OW	OILY WASTE
OWS	OIL WATER SEPARATOR
P	PUMP
RP	RECIRCULATION PUMP
YCO	YARD CLEAN OUT
WOT	WASTE OIL STORAGE TANK
NT	NEUTRALIZATION TANK
GS	GREASE INTERCEPTOR

ABBREVIATION	DESCRIPTION
SP	SOIL PIPE
SR	SHORT RADIUS
U.G.	UNDER GROUND
VP	VENT PIPE
V.R.V	VACUUM RELIEF VALVE
WCO	WALL CLEANOUT
WHA	WATER HAMMER ARRESTOR
WO	WASTE OIL
WP	WASTE PIPE

LINE STYLE	DESCRIPTION
	COLD WATER (CW)
	HOT WATER (HW)
	VENT PIPE (VP)
	SOIL PIPE (SP)
	WASTE PIPE (WS)

EQUIPMENT IDENTIFICATION

EWH-XX-XX
- ELECTRIC WATER HEATER
- UNIT NUMBER
- BUILDING ABBREVIATION

NOTES:

1. INTERIOR SOIL AND WASTE PIPING 80 (3") AND SMALLER SHALL BE ROUTED WITH A 2% SLOPE. INTERIOR SOIL AND WASTE PIPING 100 (4") AND LARGER SHALL BE ROUTED WITH A MINIMUM 1% SLOPE.
2. EXTERIOR SOIL OR WASTE PIPING SHALL BE ROUTED WITH A 2% SLOPE WHEREVER POSSIBLE, OTHERWISE A MINIMUM SLOPE OF 1% SHALL BE USED.
3. WATER AND DRAINAGE PIPING SHALL BE EXTENDED 1.5 m OUTSIDE THE BUILDING UNLESS OTHERWISE INDICATED

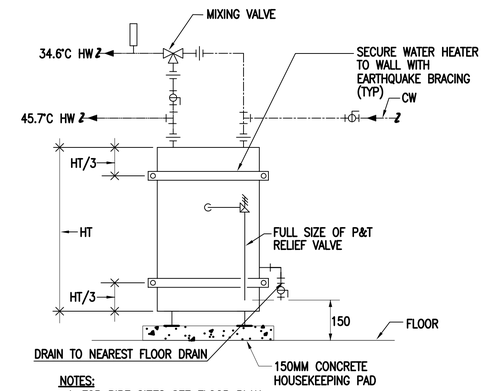

NOTES:
1-FOR PIPE SIZES SEE FLOOR PLAN.
2-FOR HEATER SELECTION SEE SCHEDULE TABLE AT DRAWING NO. (CO-P-01) AND SPECIFICATIONS.
3-SECURE WATER HEATER TO FLOOR WITH EXPANSION BOLTS, 20mm (3/4")MIN.

ELECTRIC WATER HEATER PIPING DETAIL

SCALE: N.T.S

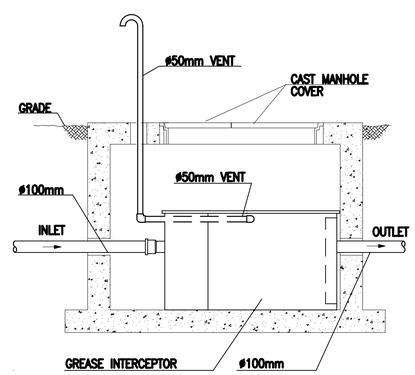

GREASE INTERCEPTOR

SCALE: N.T.S

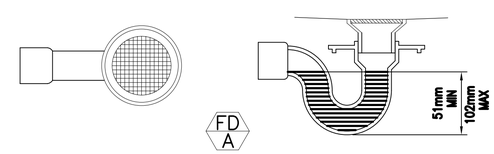

FLOOR DRAIN TYPE A

SCALE: N.T.S

UNLESS OTHERWISE NOTED, LINEAR DIMENSIONS SHOWN ARE IN MILLIMETERS.

SYMBOL	DESCRIPTION	DATE	APPR

Designed By:
Drawn By:
Checked By:
Date: 10 MAY 2007
File No. AF0707
U.S. Government Drawing Number: AF0707DC-MP01GN.dwg
Solicitation Number: –

US Army Corps of Engineers Transatlantic Programs Center

ANA REGIONAL BRIGADE
PAKTIKA, AFGHANISTAN
INTERPRETER FACILITIES
DFAC 3
PLUMBING LEGEND AND DETAILS
–

SHEET REFERENCE NUMBER:
DC-GP-01

D SIZE BORDER
32 X 20.5

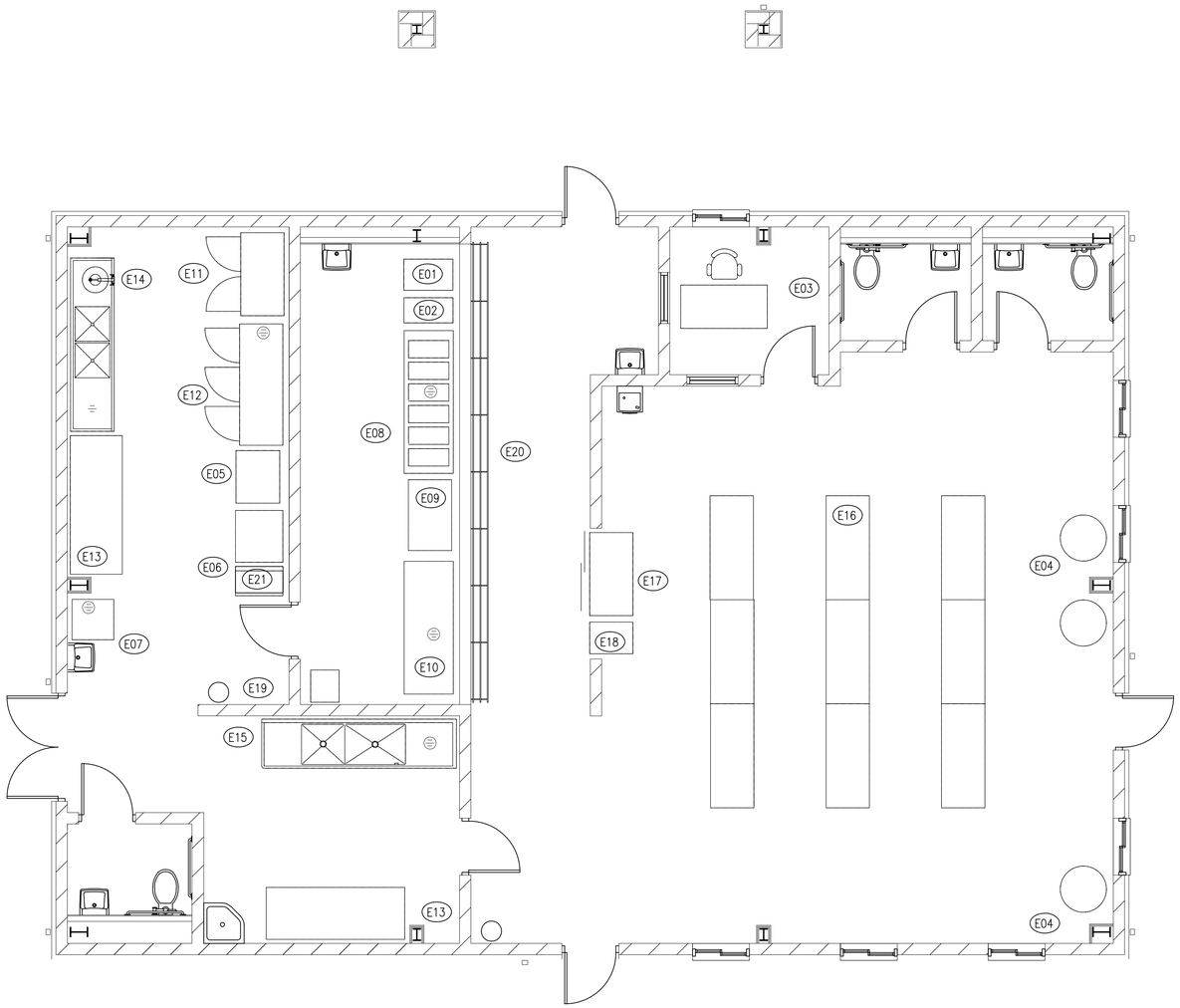

1 KITCHEN EQUIPMENT PLAN

SCALE: 1:50

SYM.	DESCRIPTION	MANUFACTURER/MODEL NO.	ELEC.@50HZ	CW	HW	W
E01	DUAL PLATE DISPENSER, MOVABLE	SERVOLIFT EASTERN/2ATC4	–	–	–	–
E02	DUAL TRAY DISPENSER & SILVERWARE/NAPKIN DISPENSER, MOVABLE	SERVOLIFT EASTERN/PTS/1418M02	–	–	–	–
E03	OFFICE FURNITURE, MOVABLE	–	–	–	–	–
E04	TRASH CANS, 3 EACH, MOVABLE	–	–	–	–	–
E05	ELECTRIC RANGE, 6-BURNER	GARLAND/SU686	19KW/240V/1ø	–	–	–
E06	ELECTRIC FRYER	PITCO SOLSTICE/SE14	25.8A/380V/3ø	–	–	–
E07	STEAMER – 12 PAN CAPACITY	ACCUTEMP/S620830120DBL	6KW/240V/1ø	–	–	–
E08	BUFFET, HOT FOOD	SERVOLIFT EASTERN/6HF(501-6)	6KW/230V/1ø	–	–	–
E09	ELECTRIC GRIDDLE, STAND MOUNTED	ACCUTEMP/EG-A48	14.25KW/230V/1ø	–	–	–
E10	COUNTER COLD FOOD	SERVOLIFT EASTERN/6-CM(502-6R-CW)	–	–	–	–
E11	FREEZER	TRUE FOOD SERVICE EQUIPMENT, INC/TS49-F	6.4A/230V/1ø	–	–	–
E12	REFRIGERATOR	TRUE FOOD SERVICE EQUIPMENT, INC./TS-72	6.9A/230V/1ø	–	–	–
E13	TABLE, 96" LONG, FIXED	–	–	–	–	–
E14	TABLE, 120" LONG, WALL MOUNTED SHELVING, DOUBLE SINKS, DISPOSAL, FIXED	–	–	–	–	–
E15	MULTI-COMPARTMENT SINK	–	–	15	50	–
E16	TABLES, CHAIRS, MOVABLE	–	–	–	–	–
E17	REF. BEVERAGES, SLIDING DOORS	TRUE FOOD SERVICE EQUIPMENT, INC./GDM-45	5.4A/230V/1ø	–	–	–
E18	ICED TEA BREWER AND DISPENSER	BUNN/TB3QA AND TDO-4	8A/230V/1ø	–	–	–
E19	ICE MACHINE	MANITOWOC/QM30A	5.3A/230V/1ø	10	–	–
E20	TRAY SLIDE (PROVIDE MFRS BRACKETS AT MFR RECOMMENDED SPACING)	LAWRENCE/THREE (3) 1" SOLID BRASS TUBES	–	–	–	–
E21	STEAM KETTLE	–	42KW/380V/1ø	13	–	2
	NOT SHOWN: ULTRAVOLET LIGHT FLY CATCHERS, WALL MOUNTED, VERIFY NUMBER AND LOCATION WITH USER	–	–	–	–	–

SYMBOL	DESCRIPTION	DATE	APP

Date: 10 MAY 2007
File No: AF0707
I.S.O. Standard Drawing: AF0707DC-MK01PN.dwg
Solicitation Number: –
Designed By:
Drawn By:
Checked By:

US Army Corps of Engineers Transatlantic Programs Center

ANA REGIONAL BRIGADE
PAKTIKA, AFGHANISTAN
INTERPRETER FACILITIES
DFAC 3
KITCHEN EQUIPMENT PLAN

SHEET REFERENCE NUMBER:
DC-MK-01

UNLESS OTHERWISE NOTED, LINEAR DIMENSIONS SHOWN ARE IN MILLIMETERS.

$DATE$
$FILE$

D SIZE BORDER
32 X 20.5

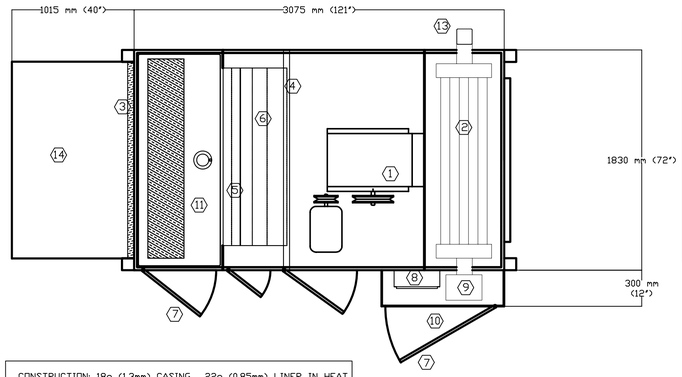

CONSTRUCTION: 18g (1.3mm) CASING. 22g (0.85mm) LINER IN HEAT EXCHANGER SECTION. INSULATION, 1" (25mm) @ 1.5 lb/ft3 (24 kg/m3). 4" (100mm) STRUCTURAL STEEL TUBE BASE. DRY ENAMEL FINISH.
APPROX. WT. 2700 lb (1227 kg)

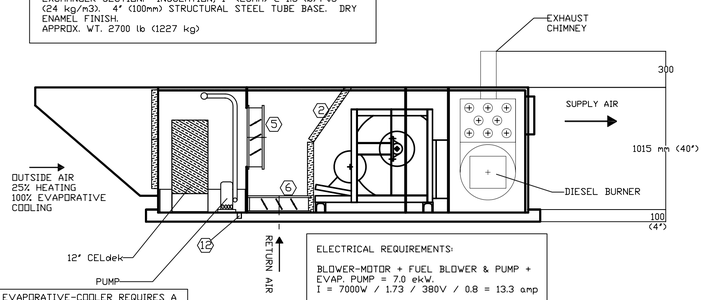

THE EVAPORATIVE-COOLER REQUIRES A 20mm WATER SUPPLY PIPE, AND A 20mm BLEED-OFF DRIAN PIPE TO A DRAIN-PIT. COORDINATE WITH CONTRACTING OFFICER FOR DRAINAGE LOCATION

ELECTRICAL REQUIREMENTS:

BLOWER-MOTOR + FUEL BLOWER & PUMP + EVAP. PUMP = 7.0 eKW.
I = 7000W / 1.73 / 380V / 0.8 = 13.3 amp

THE HEAT-COOL-UNIT MUST BE FACTORY BUILT FROM A SINGLE MANUFACTURER.

AAON MODEL No: DT-??/SW/HV, AAON INTERNATIONAL = OR EQUAL =
E-mail ABILLOK@WORLDNET.ATT.NET = TEL: USA, 623-433-9880

1	S/A FAN & MOTOR: 3420 cfm (5810 m3/h) @ ESP 1" W.C. - MOTOR 5 Hp, 2 SPEED, 380v/3/50Hz, TEFC, MIN. 40°C AMBIENT
2	AAON INDIRECT-FIRED STAINLESS-STEEL HEAT EXCHANGER. INPUT 350 MBH (102 TKw); DIESEL FUEL; AIR TEMP. RISE 48 °F (27 °C)
3	2" (50mm) 30% EFF WASHABLE PRE-FILTERS.
4	2" (50mm) 30% EFF. PLEATED FINAL-FILTERS.
5	OUTSIDE AIR DAMPER with ACTUATOR.
6	RETURN AIR DAMPER with ACTUATOR.
7	ACCESS DOORS (TYP), HINGED with CAMLOCK
8	ELECTRICAL PANEL
9	DIESEL FUEL BURNER - RIELLO 40 (No. 2 FUEL OIL); FIRING RATE 1.45 TO 2.95 gph (5.49 TO 11.17 lt/h); CAPACITY 203 TO 413 MBH (60 TO 120 tkW) FUEL PRESSURE 100 TO 200 psig (690 TO 1380 KPa).
10	ELECTRICAL & PIPING VESTIBULE
11	EVAPORATIVE COOLING SECTION, EVAP. PADS: 12" CELdek MEDIA @ 85% EFF. Complete with WATER-PUMP, FLOAT-VALVE, DISTRIBUTORS & PIPE.
12	STAINLESS-STEEL SUMP TANK with 3/4" NPT DRAIN PIPE & BLEED-OFF OVERFLOW (to prevent mineral build-up in evap. water).
13	BURNER EXHAUST CHIMNEY 5" X 5 " (125 X 125 mm).
14	OUTDOOR AIR INTAKE HOOD with BIRDSCREEN.

AAON MODEL No. DT-??/SW/HV (DWG: PDM-3788), WT. 2700 lb (1230 Kg)
CONTACT: ANDREW J. BILLOK, AAON INTERNATIONAL; AJB ASSOCIATES, INC.
3120 WEST CAREFREE HIGHWAY, PHOENIX, AZ 85086; TEL: 623-433-9880
E-MAIL: ABILLOK@WORLDNET.ATT.NET
HEAT-COOL-UNITS MANUFACTURED BY AAON CANADA, LEAD TIME 16 TO 18 WEEKS FOR UP TO 100 UNITS ORDERED AT ONE TIME. FACTORY IS LOCATED IN BURLINGTON, ONTARIO, CANADA.

CONTROLS: EVAP/DIESEL UNITS SHALL BE STARTED THROUGH HEAT-COOL-OFF SWITCH AND RUN CONTINOUSLY TO HEAT AND COOL BUILDING. THERMOSTAT SHALL CONTROL SUPPLY TEMPERATURE OFF UNIT.

COOLING MODE: UNIT SHALL OPERATE IN 100% OA MODE. HOOD FANS EF-DF-03 AND EF-DF-04 SHALL BE ENERGIZED.

HEATING MODE: UNIT SHALL OPERATE IN RETURN AIR MODE, RETURNING APPROX. 0% TO 44% OF SUPPLY AIR TO UNIT, DEPENDING ON HOOD OPERATION. OUTSIDE AIR SHALL MAKE UP REMAINDER.

IN UNOCCUPIED HEATING MODE, EF-DF-04 SHALL BE ENERGIZED AND EXHAUST FAN EF-DF-03 SHALL BE DEENERGIZED.

IN OCCUPIED HEATING MODE (HOODS RUNNING), EF-DF-03 AND EF-DF-04 SHALL BE ENERGIZED.

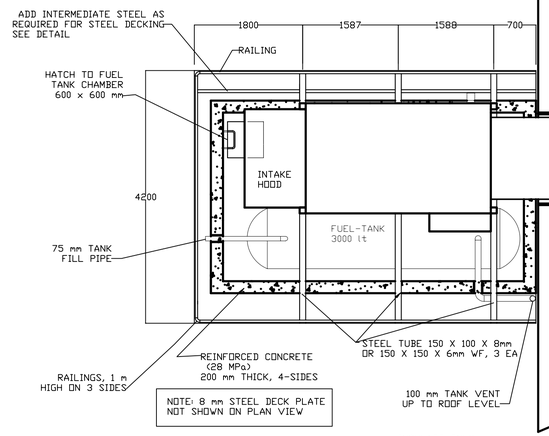

NOTE: 8 mm STEEL DECK PLATE NOT SHOWN ON PLAN VIEW

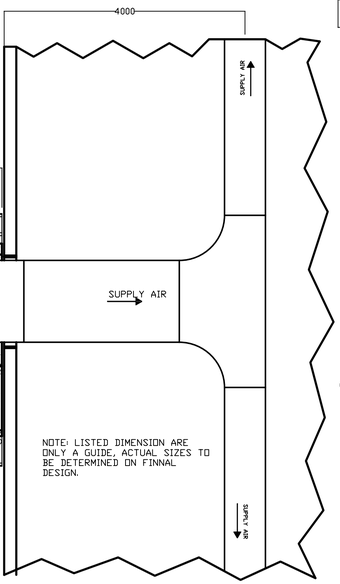

NOTE: LISTED DIMENSION ARE ONLY A GUIDE, ACTUAL SIZES TO BE DETERMINED ON FINNAL DESIGN.

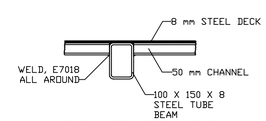

TYPICAL DECK DETAIL, SCALE X 4

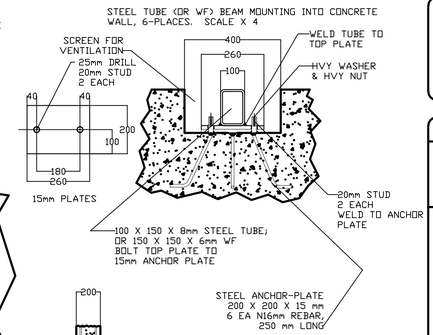

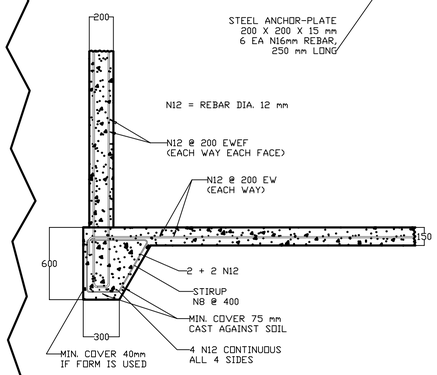

REINFORCED CONCRETE (NO MASONRY) FUEL-TANK ENCLOSURE & MOUNTING PLATFORM FOR HEAT-COOL UNIT.

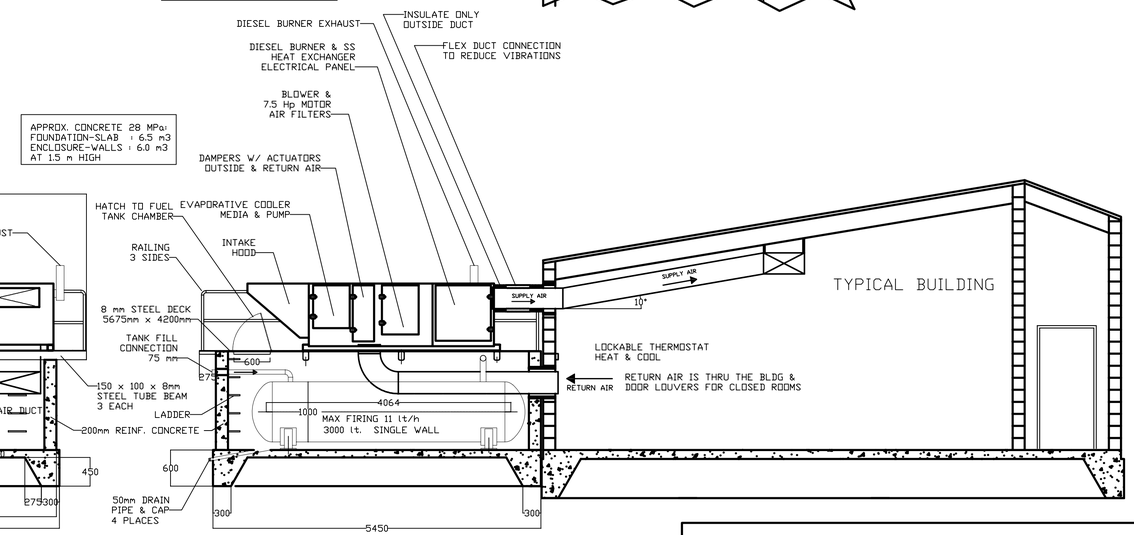

DFAC3 BUILDING COOLING LOAD - 102,000 BTUH. MAX BUILDING HEATING LOAD - 188,374 BTUH UNIT MANUFACTURER SHALL MODIFY THE UNIT AS NECESSARY TO INSURE THESE LOADS ARE MET. CFMS TO INDIVIDUAL ROOMS AND DUCT SIZE ALSO MAY BE MODIFIED.

UNLESS OTHERWISE NOTED, LINEAR DIMENSIONS SHOWN ARE IN MILLIMETERS.

SYMBOL	DESCRIPTION	DATE	APP

Designed By:
Drawn By:
Checked By:
Date: 10 MAY 2007
File No: AF0707
I.S.O. Sheet File Name: AF0707DC-MH03GN.dwg
Solicitation Number: -

US Army Corps of Engineers
Transatlantic Programs Center

ANA REGIONAL BRIGADE
PAKTIKA, AFGHANISTAN
INTERPRETER FACILITIES
DFAC 3
HVAC DETAILS
- -

SHEET REFERENCE NUMBER:
DC-DM-02

$DATE$
$FILE$

D SIZE BORDER
32 X 20.5

CEILING FAN SCHEDULE (CF)

UNIT NUMBER	TYPE (NOTE 1)	FAN DIAMETER	MAX WATTS	ELECTRICAL DATA			REMARKS
				VOLTS	PHASE	HERTZ	
CF-1	WITH LIGHT	48 in	100	220	1	50	3-SPEED

NOTES:- 1- WITH LIGHT FIXTURE - (2) 13 WATT FLOURESCENT BULBS
2- BOTTOM OF FAN MOUNTING HEIGHT = MINIMUM 2500mm A.F.F
3- PROVIDE WITH REMOTE WALL MOUNTED, SWITCH LOCATED ADJACENT TO THERMOSTAT. SWITCH TO CONTROL FAN AND LIGHTS SEPERATELY.

ELECTRIC UNIT HEATER

MARK		UH-DF-1
CAPACITY (KW)		2
HEATING CAPACITY TOTAL (BTUH)		6828
CMH/THROW		500/3
LOCATION		TOILET
ELECTRICAL DATA	VOLTS	220
	PHASE	1
	HERTZ	50
TOTAL NUMBER		3

REMARKS: CONTROLLED BY MANUFACTURER'S THERMOSTAT MOUNTED 1500 A.F.F. UNDER HEATER.

EXHAUST FAN SCHEDULE (EF)

UNIT NUMBER	SERVICE	TYPE	AIR QUANTITY		MINIMUM WHEEL DIAMETER		FAN	STATIC PRESSURE		ELECTRICAL DATA				TEMP CONTROL DIAGRAM	INTERLOCK WITH	DRIVE TYPE	REMARKS
			CMH	CFM	MM	INCHES	RPM	mmH20	IN W.G.	H.P.	VOLTS	PHASE	HERTZ				
EF-DF-01	VENT	W-CTFG-GP	170	100	NA	NA	1550	2.54	0.1	1/60	220	1	50	NONE	SWITCH	DIRECT	NOTES 1, 2, 4
EF-DF-02	VENT	W-CTFG-GP	170	100	NA	NA	1550	2.54	0.1	1/60	220	1	50	NONE	SWITCH	DIRECT	NOTES 1, 2, 4
EF-DF-03	VENT	R-CTFG-UB	3820	2250	NA	NA	1500	6.35	0.25	3/4	220	1	50	NONE	SWITCH	BELT	NOTES 2, 3
EF-DF-04	VENT	R-CTFG-UB	2550	1500	NA	NA	1450	6.35	0.25	1/4	220	1	50	NONE	SWITCH	BELT	NOTES 2, 3

MANUFACTURER SHALL PROVIDE NECESSARY TRANSFORMERS ON ALL UNITS TO MEET ELECTRICAL REQUIREMENT.
NOTE 1. SUPPLIED WITH BACKDRAFT DAMPER
NOTE 2. ALL EXHAUST FANS WITH SINGLE PHASE POWER ARE TO BE PROVIDED w/ A FACTORY MOUNTED DISCONNECT SWITCH.
NOTE 3. PROVIDE FACTORY ROOF CURB.
NOTE 4. CONTROL EXHAUST FANS THROUGH A WALL SWITCH NEAR A LIGHT SWITCH..

FAN SCHEDULE TYPE - LEGEND
(REF. EXHAUST AND SUPPLY FAN SCHEDULES)
R-CTFG-GP

R =ROOF
W =WALL
IL =INLINE
CL =CEILING

GP = GENERAL PURPOSE
EP = EXPLOSION PROOF
DB = DOWN BLAST
UB = UP BLAST
UT = UTILITY SET

CTFG = CENTRIFUGAL
PROP = PROPELLER
TUBA = TUBE AXIAL

HOOD H-1 NOTES

1. KITCHEN VENTILATION HOOD SHALL BE CONSTRUCTED OF 304 STAINLESS STEEL AND HAVE A TOTAL LENGTH OF 2250, WIDTH OF 1000 AND DEPTH OF 600. THE ASSEMBLY AT JOINTS AND SEAMS ON THE HOOD SHALL BE LIQUID TIGHT. THE EXPOSED EXTERNAL WELDS SHALL BE GROUND DOWN, SMOOTHED AND HIGHLY POLISHED. CONSTRUCTION SHALL INCLUDE GALVANIZED STRUCTURAL STEEL FRAMING MEMBERS AS REQUIRED TO PREVENT FLEXING AND FATIGUE OF HOOD. THE HOOD SHALL INCLUDE A FILTER HOUSING CONSTRUCTED OF THE SAME MATERIALS AS THE HOOD COMPLETE WITH STAINLESS STEEL U.L. CLASSIFIED GREASE FILTERS OF SUFFICIENT NUMBERS AND SIZES TO INSURE OPTIMUM PERFORMANCE AS SPECIFIED BY EXTRACTOR MANUFACTURER. THE FILTER HOUSING SHALL TERMINATE INTO A PITCHED INTERNAL FULL LENGTH GREASE TROUGH WIHICH SHALL DRAIN INTO A REMOVABLE RECESSED ONE CUP CAPACITY GREASE DRAWER. VAPORPROOF U.L. LISTED, MARINE INCANDESCENT LIGHT FIXTURES SHALL BE PREWIRED AT APPROXIMATELY 900 CENTERS. THE LIGHTS SHALL BE PREWIRED TO A JUNCTION BOX SITUATED AT THE TOP OF THE HOOD FOR FIELD CONNECTION TO POWER. THE WIRING SHALL CONFORM TO THE REQUIREMENTS OF THE INTERNATIONAL ELECTRIC CODE. THE HOOD SHALL BE FABRICATED IN ACCORDANCE WITH NFPA 96, AND SHALL BE U.L. LISTED OR U.L. CLASSIFIED AS REQUIRED.

2. ALL EXHAUST DUCT WORK FOR EXHAUST HOOD SHALL 16 GAUGE GALVANIZED STEEL. ALL SEAMS AND JOINTS SHALL BE MADE LIQUID TIGHT WITH A CONTINUOUS EXTERNAL WELD. ALL SECTIONS OF THE DUCT SYSTEM SHALL BE CONSTRUCTED AND INSTALLED WITHOUT FORMING DIPS AND TRAPS AND SHALL SLOPE NOT LESS THAN 1 INCH PER FOOT TOWARD THE HOOD.

3. KITCHEN HOOD EXHAUST FAN EF-DF-3 SHALL COME SUPPLIED WITH ROOF CURB FROM FANS MANUFACTURER WITH EXTENSION SO THAT THE FANS DISCHARGE IS A MINIMUM OF 40 INCHES ABOVE ROOF.

HOOD H-2 NOTES

1. KITCHEN VENTILATION HOOD SHALL BE CONSTRUCTED OF 304 STAINLESS STEEL AND HAVE A TOTAL LENGTH OF 1500, WIDTH OF 1000 AND DEPTH OF 600. THE ASSEMBLY AT JOINTS AND SEAMS ON THE HOOD SHALL BE LIQUID TIGHT. THE EXPOSED EXTERNAL WELDS SHALL BE GROUND DOWN, SMOOTHED AND HIGHLY POLISHED. CONSTRUCTION SHALL INCLUDE GALVANIZED STRUCTURAL STEEL FRAMING MEMBERS AS REQUIRED TO PREVENT FLEXING AND FATIGUE OF HOOD. THE HOOD SHALL INCLUDE A FILTER HOUSING CONSTRUCTED OF THE SAME MATERIALS AS THE HOOD COMPLETE WITH STAINLESS STEEL U.L. CLASSIFIED GREASE FILTERS OF SUFFICIENT NUMBERS AND SIZES TO INSURE OPTIMUM PERFORMANCE AS SPECIFIED BY EXTRACTOR MANUFACTURER. THE FILTER HOUSING SHALL TERMINATE INTO A PITCHED INTERNAL FULL LENGTH GREASE TROUGH WIHICH SHALL DRAIN INTO A REMOVABLE RECESSED ONE CUP CAPACITY GREASE DRAWER. VAPORPROOF U.L. LISTED, MARINE INCANDESCENT LIGHT FIXTURES SHALL BE PREWIRED AT APPROXIMATELY 900 CENTERS. THE LIGHTS SHALL BE PREWIRED TO A JUNCTION BOX SITUATED AT THE TOP OF THE HOOD FOR FIELD CONNECTION TO POWER. THE WIRING SHALL CONFORM TO THE REQUIREMENTS OF THE INTERNATIONAL ELECTRIC CODE. THE HOOD SHALL BE FABRICATED IN ACCORDANCE WITH NFPA 96, AND SHALL BE U.L. LISTED OR U.L. CLASSIFIED AS REQUIRED.

2. ALL EXHAUST DUCT WORK FOR EXHAUST HOOD SHALL 16 GAUGE GALVANIZED STEEL. ALL SEAMS AND JOINTS SHALL BE MADE LIQUID TIGHT WITH A CONTINUOUS EXTERNAL WELD. ALL SECTIONS OF THE DUCT SYSTEM SHALL BE CONSTRUCTED AND INSTALLED WITHOUT FORMING DIPS AND TRAPS AND SHALL SLOPE NOT LESS THAN 1 INCH PER FOOT TOWARD THE HOOD. VENTILATION SYSTEM SHALL COMPLY WITH NFPA 96.

3. HOOD EXHAUST FAN EF-DF-4 SHALL COME SUPPLIED WITH ROOF CURB FROM FANS MANUFACTURER WITH EXTENSION SO THAT THE FANS DISCHARGE IS A MINIMUM OF 40 INCHES ABOVE ROOF.

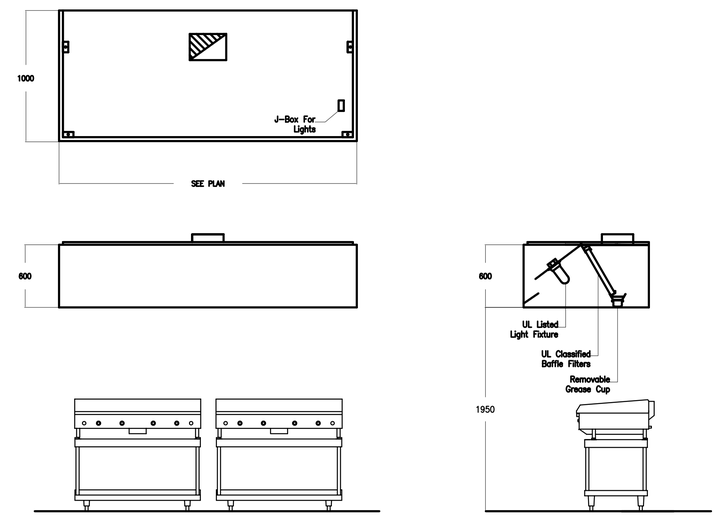

TYPICAL HOOD DETAIL
N.T.S.

UNLESS OTHERWISE NOTED, LINEAR DIMENSIONS SHOWN ARE IN MILLIMETERS.

SYMBOL	DESCRIPTION	DATE	APP

Designed By: W.J. KNAPP
Drawn By: W.J. KNAPP
Checked By: W.C. THAMES
Date: 10 MAY 2007
File No: AF0707
I.S.D. Sheet File Name: AF07070C-MH02PN.dwg
Solicitation Number: -
G.W. WHIGHAM

US Army Corps of Engineers
Transatlantic Programs Center

ANA REGIONAL BRIGADE
PAKTIKA, AFGHANISTAN
INTERPRETER FACILITIES
DFAC 3
HVAC SCHEDULES
- -

SHEET REFERENCE NUMBER:
DC-MH-02

$DATE$
$FILE$

D SIZE BORDER
32 X 20.5

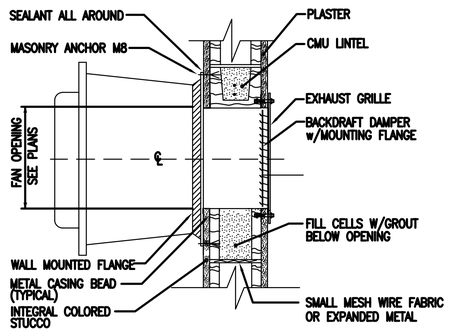

NOTES:-
* GASKET MATERIAL TO BE PROVIDED TO BOTTOM OF FAN INSIDE MOUNTING ANGLES.

1 WALL MOUNTED EXHAUST FAN INSTALLATION DETAIL

SCALE: N.T.S

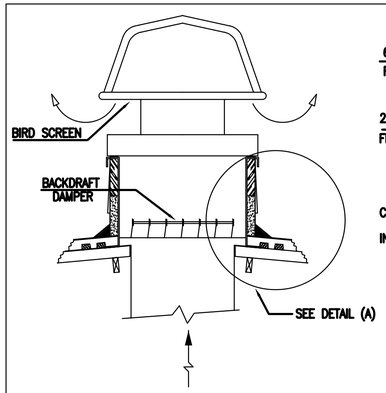

EXHAUST HOOD

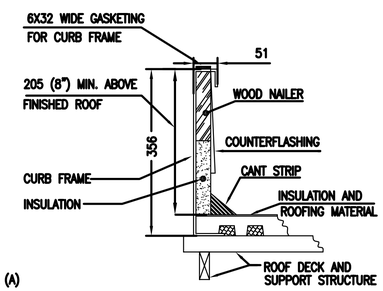

CURB DETAIL A

2 ROOF MOUNTED EXHAUST FAN DETAIL

SCALE: N.T.S

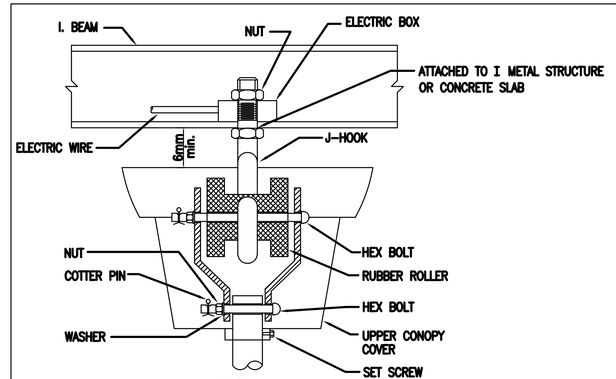

DETAIL A

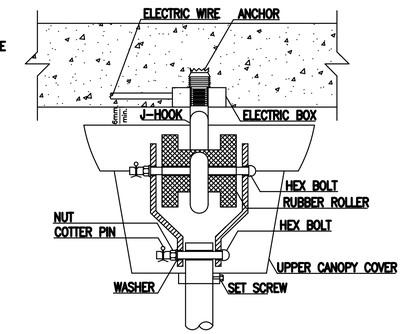

ALT. DETAIL A

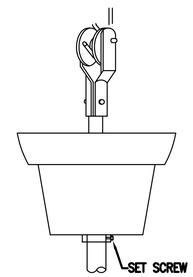

DETAIL B

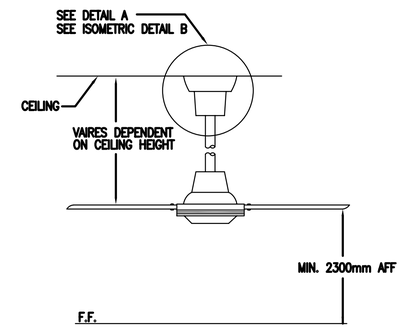

3 CEILING FAN MOUNTING DETAILS

SCALE: N.T.S

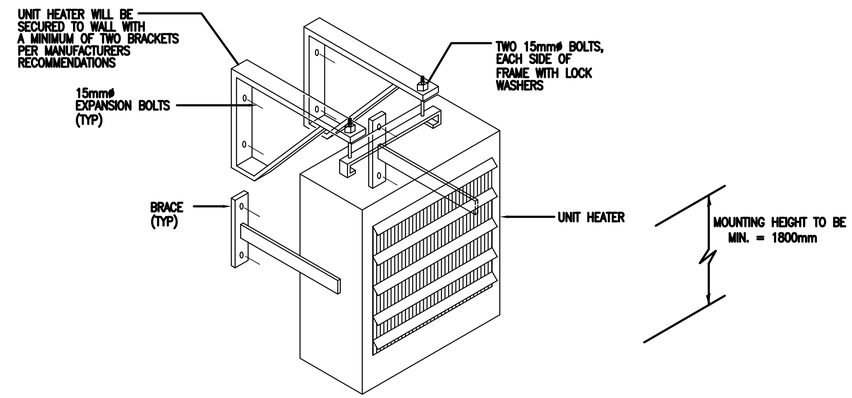

4 ELECTRIC WALL MOUNTED UNIT HEATER DETAIL

SCALE: N.T.S

UNLESS OTHERWISE NOTED, LINEAR DIMENSIONS SHOWN ARE IN MILLIMETERS.

SYMBOL	DESCRIPTION	DATE	APR

Date: 10 MAY 2007
File No: AF0707
I.S.O. Sheet File Name: AF0707DC-MH02GN.dwg
Solicitation Number: –
Designed By:
Drawn By:
Checked By:

US Army Corps of Engineers
Transatlantic Programs Center

ANA REGIONAL BRIGADE
PAKTIKA, AFGHANISTAN
INTERPRETER FACILITIES
DFAC 3
HVAC DETAILS
– –

SHEET REFERENCE NUMBER:
DC–DM–01

$DATE$
$FILE$

D SIZE BORDER
32 X 20.5

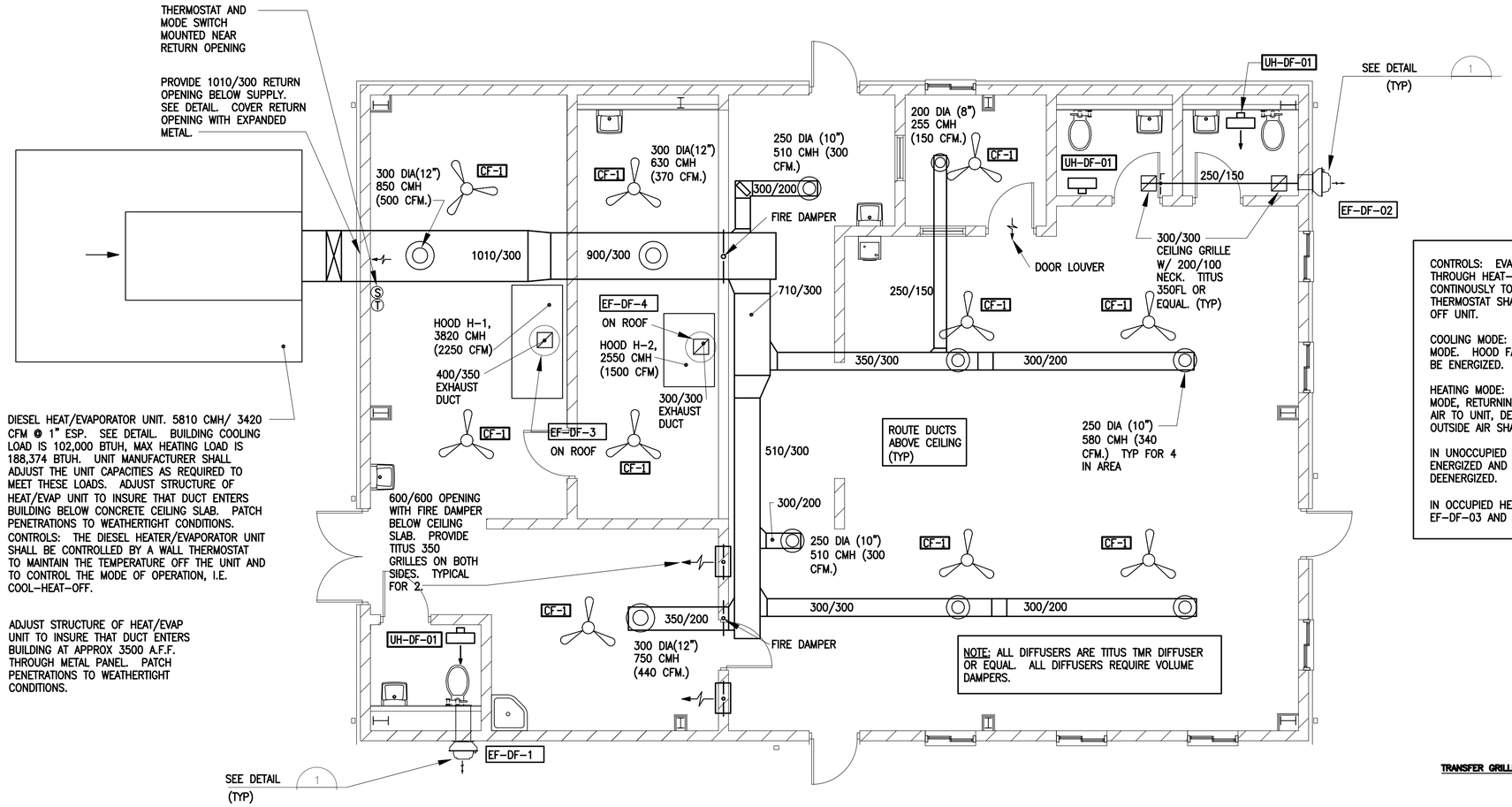

NOTE: ALL DIFFUSERS ARE TITUS TMR DIFFUSER OR EQUAL. ALL DIFFUSERS REQUIRE VOLUME DAMPERS.

CONTROLS: EVAP/DIESEL UNITS SHALL BE STARTED THROUGH HEAT-COOL-OFF SWITCH AND RUN CONTINOUSLY TO HEAT AND COOL BUILDING. THERMOSTAT SHALL CONTROL SUPPLY TEMPERATURE OFF UNIT.

COOLING MODE: UNIT SHALL OPERATE IN 100% OA MODE. HOOD FANS EF-DF-03 AND EF-DF-04 SHALL BE ENERGIZED.

HEATING MODE: UNIT SHALL OPERATE IN RETURN AIR MODE, RETURNING APPROX. 0% TO 44% OF SUPPLY AIR TO UNIT, DEPENDING ON HOOD OPERATION. OUTSIDE AIR SHALL MAKE UP REMAINDER.

IN UNOCCUPIED HEATING MODE, EF-DF-04 SHALL BE ENERGIZED AND EXHAUST FAN EF-DF-03 SHALL BE DEENERGIZED.

IN OCCUPIED HEATING MODE (HOODS RUNNING), EF-DF-03 AND EF-DF-04 SHALL BE ENERGIZED.

1 HVAC FLOOR PLAN

SCALE: 1:50

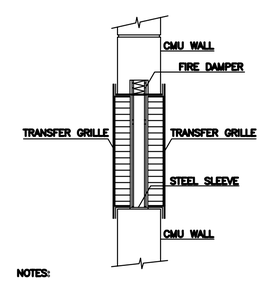

NOTES:
1- SEE MECH. FOR LOCATIONS, MOUNTING INFORMATION, AND GRILLES REQUIRING FIRE DAMPERS.

TYPICAL TRANSFER GRILLE

SCALE: N.T.S

UNLESS OTHERWISE NOTED, LINEAR DIMENSIONS SHOWN ARE IN MILLIMETERS.

SYMBOL	DESCRIPTION	DATE	APR

Designed By: W.J. KNAPP
Date: 10 MAY 2007
Drawn By: W.J. KNAPP
File No: AF0707
Checked By: W.C. THAMES
T.O.D. Sheet File Name: AF0707DC-MH01PN.dwg
G.W. WHIGHAM
Solicitation Number: -

US Army Corps of Engineers Transatlantic Programs Center

ANA REGIONAL BRIGADE
PAKTIKA, AFGHANISTAN
INTERPRETER FACILITIES
DFAC 3
HVAC PLAN
- -

SHEET REFERENCE NUMBER:
DC-MH-01

$DATE$
$FILE$

D SIZE BORDER
32 X 20.5

ABBREVIATIONS

ABV. CLG	:–	ABOVE CEILING
AFF	:–	ABOVE FINISH FLOOR
AHU	:–	AIR HANDLING UNIT
AMPS	:–	AMPERES
B.D	:–	BACKDRAFT DAMPER
B.H	:–	BASE BOARD HEATER
B.M.O	:–	BELL MOUTH OPENING
BOP	:–	BOTTOM OF PIPE
BTU/H	:–	BRITISH THERMAL UNITS PER HOUR
CD	:–	CONDENSATE DRAIN
CF	:–	CEILING FAN
C.F.M	:–	CUBIC FEET PER MINUTE
C.M.H	:–	CUBIC METER PER HOUR
CONN	:–	CONNECTION
CORR	:–	CORRUGATED
CU	:–	CONDENSING UNIT
DB	:–	DRY BULB
DH	:–	DIESEL UNIT HEATER
DIA	:–	DIAMETER
D.L	:–	DOOR LOUVER
DT	:–	DAY TANK
DWG	:–	DRAWING
EF	:–	EXHAUST FAN
EL	:–	EXHAUST LOUVER
ENT	:–	ENTERING
EXH.G	:–	EXHAUST GRILLE
EXT	:–	EXTERNAL
F.A.D	:–	FRESH AIR DUCT
FD	:–	FIRE DAMPER
FLA	:–	FULL LOAD AMPERES
FOR	:–	FUEL OIL RETURN
FO	:–	FUEL OIL
FOS	:–	FUEL OIL SUPPLY
FPM	:–	FEET PER MINUTE
FT	:–	FEET
GALV	:–	GALVANIZED
HP	:–	HORSE POWER
KW	:–	KILO WATTS
LD	:–	LEAK DETECTOR
L/S	:–	LITERS PER SECOND
LT	:–	LEVEL TRANSMITTER

ABBREVIATIONS

LVG	:–	LEAVING
MRAD	:–	MOTORIZED RETURN (RECIRCULATION)
MAID	:–	MOTORIZED AIR INTAKE DAMPER
MEAD	:–	MOTORIZED EXHAUST AIR DAMPER
M.D	:–	MOTORIZED DAMPER
mm	:–	MILLIMETERS
MPS	:–	METERS PER SECOND
NC	:–	NORMALLY CLOSED
NO	:–	NORMALLY OPEN
OC	:–	ON CENTERS
OSA	:–	OUTSIDE AIR
P	:–	PUMP
PACU	:–	PACKAGE AIR CONDITIONING UNIT
P.S	:–	POWER SUPPLY
R.C.D	:–	RETURN CEILING DIFFUSER
R.D	:–	RETURN AIR DUCT
RED	:–	REDUCTION/REDUCER
R.G	:–	RETURN GRILLE
RPM	:–	REVOLUTIONS PER MINUTE
RS	:–	REFRIGERANT SUCTION
RL	:–	REFRIGERANT LIQUID
S.C.D	:–	SUPPLY CEILING DIFFUSER
S.D	:–	SUPPLY DUCT
SF	:–	SUPPLY FAN
S.G	:–	SUPPLY GRILLE
SM.D	:–	SMOKE DETECTOR
SP	:–	STATIC PRESSURE
SQ	:–	SQUARE
SR	:–	SHORT RADIUS
S.R–X	:–	SUPPLY REGISTER TYPE–X
SS	:–	STAINLESS STEEL
SU	:–	SPLIT UNIT
T	:–	SPACE THERMOSTAT
T.G	:–	TRANSFER GRILLE
TOS	:–	TOP OF SUPPORT
TYP	:–	TYPICAL
U.C	:–	UNDER CUT
UH	:–	UNIT HEATER
V.D	:–	VOLUME DAMPER
WB	:–	WET BULB
WG	:–	WATER GAGE

NOTES:

1– ALL DIMENSIONS ARE IN MM UNLESS OTHERWISE NOTED.

2– DUCT DIMENSION INDICATES INSIDE DIMENSIONS.

3– EXACT LOCATIONS OF POWER SUPPLY POINTS, CONTROL PANEL AND MOTOR SWITCH TO BE TAKEN FROM ELECTRICAL DESIGN DRAWINGS.

4– THERMOSTAT HEIGHT IS 1525mm ABOVE F.F.L.

5– ALL EXTERIOR SUPPLY DUCTS WILL BE INSULATED WITH 50 mm THICK. MINERAL FIBER AND SHALL BE COVERED WITH METAL CLADDING.

6– ALL MENTIONED HEIGHTS ARE MEASURED FROM F.F.L.

7– INSULATE ALL THE SUPPLY DUCT WITH 50mm(2") INSULATION THICKNESS, 16kg/m^3 FIBERGLASS.

SYMBOLS

:– SWITCH

:– THERMOSTAT

:– TEMPERATURE SENSOR

:– MOTORIZED DAMPER

:– CARBON MONOXIDE SENSOR

:– CEILING FAN

:– THRU WALL EXHAUST FAN

:– BASE BOARD HEATER

:– UNIT HEATER

:– DIESEL UNIT HEATER

:– OUTSIDE INTAKE LOUVER

:– GRAVITY RIDGE VENT

:– EXHAUST ROOF FAN

:– SUPPLY ROOF FAN

:– SPLIT UNIT

:– CONDENSING UNIT

F.F.L xx :– FINISH FLOOR LEVEL IN (m) MEASURED FROM REFRENCE +0.00 LEVEL

:– SUPPLY SECTION FAN

:– FIRE DAMPER

:– VOLUME DAMPER

:– DOOR LOUVER

:– UNDER CUT

EQUIPMENT IDENTIFICATION

XX–XX–XX

- UNIT NUMBER
- BUILDING ABBREVIATION
- EQUIPMENT TYPE

DUCTWORK

SUPPLY AIR DIFFUSER – ARROWS INDICATE PATTERN. NO PATTERN SHOWN EQUALS 4–WAY.

RETURN AIR GRILLE

EXHAUST GRILLE

SUPPLY AIR SLOT

RETURN AIR SLOT

ROUND DUCTWORK. DIAMETER INDICATED IN MILLIMETER

RECTANGULAR DUCTWORK. SIZE INDICATED IN INCHES, FIRST NUMBER IS SIDE SHOWN.

FLEXIBLE DUCT

SUPPLY OR OUTSIDE AIR DUCT

RETURN AIR DUCT.

RELIEF OR EXHAUST AIR DUCT.

90 DEGREE DUCTWORK ELBOW.

RADIUS DUCTWORK ELBOW – ROUND OR RECTANGULAR.

RECTANGULAR DUCTWORK BRANCH TAKE–OFF WITH 45 DEGREE BRANCH INLET.

FLARED SPIN–IN WITH DAMPER AND FLEX DUCT (DIFFUSER CONNECTION).

ROUND DUCT BRANCH TAKE–OFF FROM RECTANGULAR MAIN WITH CONICAL TAP.

DUCTWORK SIZE TRANSITION.

DUCT PRESSURE CLASS. POINT OF CHANGE IN DUCT CONSTRUCTION.

FLEXIBLE DUCT CONNECTION

SUPPLY OR OUTSIDE AIR DUCT UP

SUPPLY OR OUTSIDE AIR DUCT DOWN

RETURN AIR DUCT UP

RETURN AIR DUCT DOWN

RELIEF OR EXHAUST AIR DUCT UP

RELIEF OR EXHAUST AIR DUCT DOWN

IN–LINE 90 DEGREE DROP (RISE) IN DUCT

UP INCLINED RISE IN DUCT

DN INCLINED DROP IN DUCT

TURNING VANES

DUCT EXTRACTOR

SPLITTER DAMPER

AD ACCESS DOOR

UNLESS OTHERWISE NOTED, LINEAR DIMENSIONS SHOWN ARE IN MILLIMETERS.

SYMBOL	DESCRIPTION	DATE	APP

Date: 10 MAY 2007
File No: AF0707
I.S.O. Sheet File Name: AF0707DC–MH01GN.dwg
Solicitation Number: –
Designed By:
Drawn By:
Checked By:

US Army Corps of Engineers Transatlantic Programs Center

ANA REGIONAL BRIGADE
PAKTIKA, AFGHANISTAN
INTERPRETER FACILITIES
DFAC 3
HVAC LEGEND
– –

SHEET REFERENCE NUMBER:
DC–GM–01

$DATE$
$FILE$

D SIZE BORDER
32 X 20.5

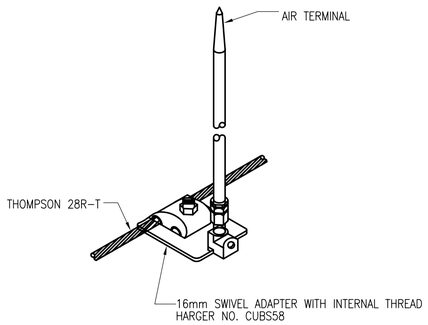

1 AIR TERMINAL MOUNTING DETAIL

SCALE: N.T.S

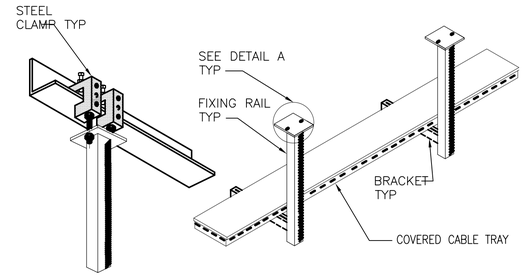

DETAIL# A

2 CABLE TRAY SUPPORT DETAIL

SCALE: N.T.S

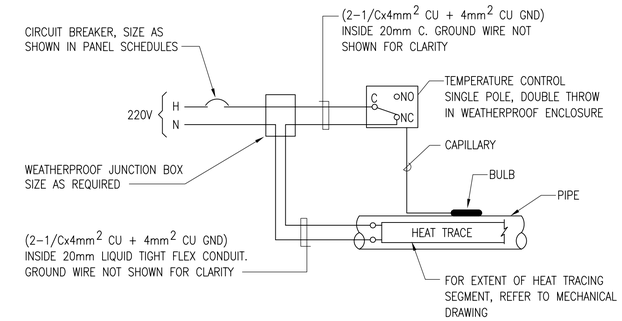

3 HEAT TRACE CONTROL DIAGRAM

SCALE: N.T.S

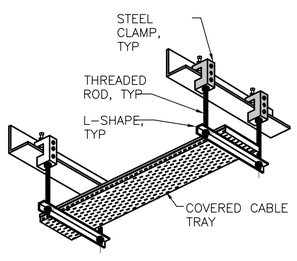

4 CABLE TRAY SUPPORT DETAIL

SCALE: N.T.S

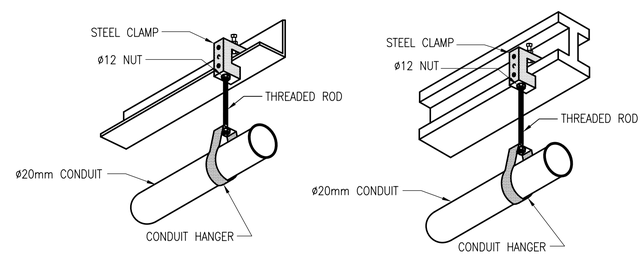

5 SUPPORT OF CONDUIT FROM STEEL STRUCTURE

SCALE: N.T.S

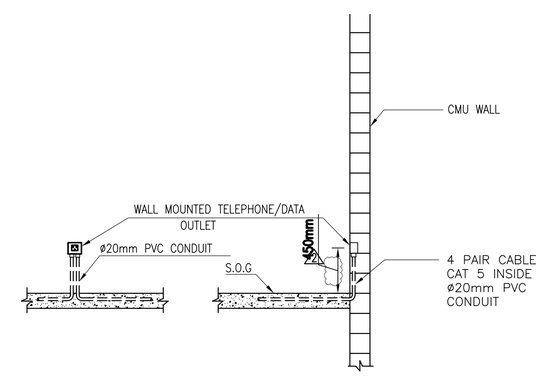

6 GENERAL INSTALLATION DETAIL FOR RECESSED TELEPHONE/ DATA OUTLET (CONDUIT EMBEDDED IN SLAB)

SCALE: N.T.S

UNLESS OTHERWISE NOTED, LINEAR DIMENSIONS SHOWN ARE IN MILLIMETERS.

SYMBOL	DESCRIPTION	DATE	APP

Designed By:
Drawn By:
Checked By:
Date: 10 MAY 2007
File No. AF0707
I.S.O. Sheet File Name: AF0707DC-ELO3DT.dwg
Solicitation Number: –

US Army Corps of Engineers Transatlantic Programs Center

ANA REGIONAL BRIGADE
PAKTIKA, AFGHANISTAN
INTERPRETER FACILITIES
DFAC 3
ELECTRICAL DETAILS

SHEET REFERENCE NUMBER:
DC-DE-03

$DATE$
$FILE$

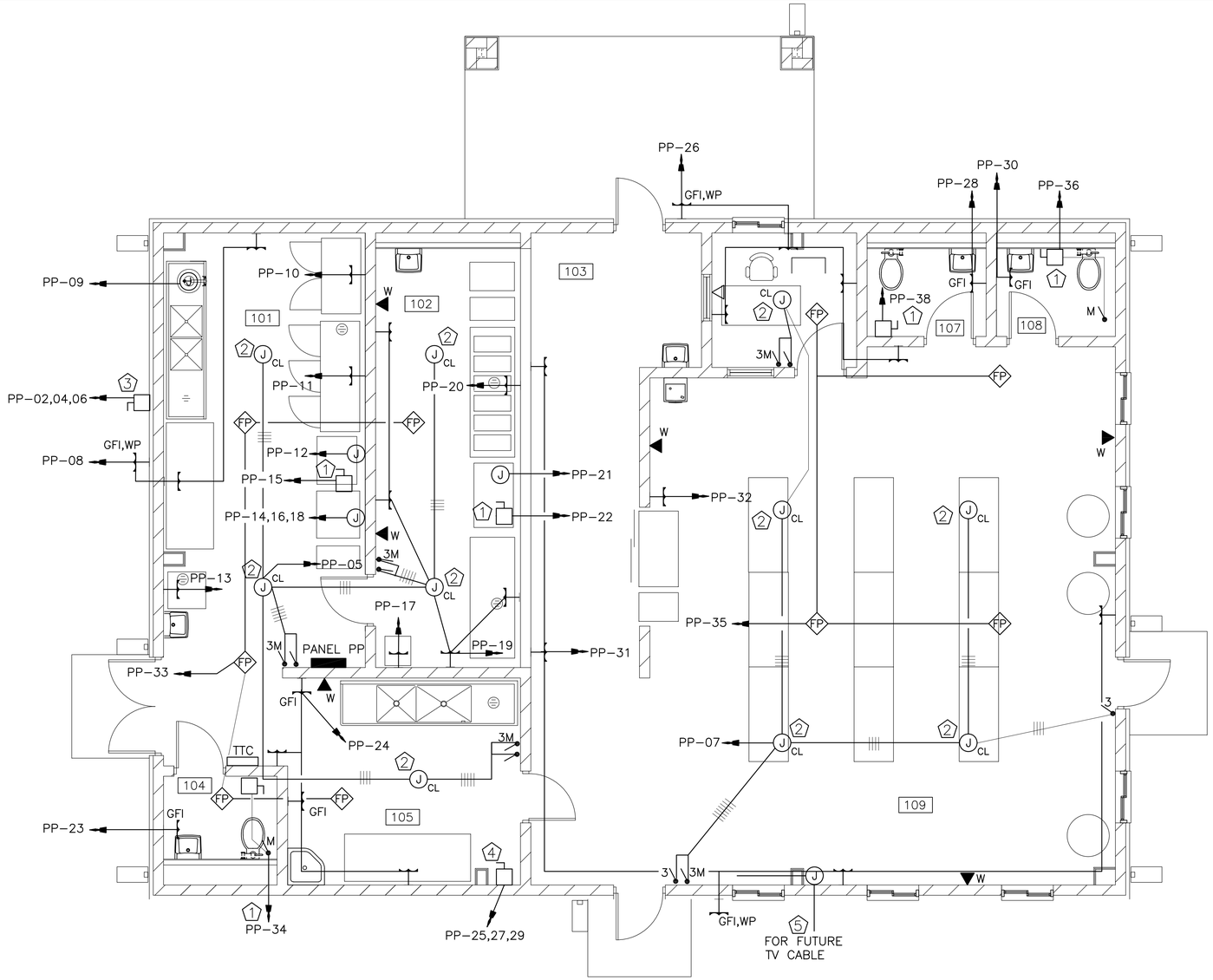

NOTES:

SEE CE-GE-02 FOR BRANCH CIRCUITS WIRING SCHEDULE WITH CONDUIT SIZES.

1. PROVIDE 1P, 20A, 220V NONFUSED DISCONNECT IN NEMA TYPE 1 ENCLOSURE.
2. J-BOX FOR CEILING FAN/LIGHT FIXTURE. SEE MECHANICAL SCHEDULES AND DETAILS.
3. PROVIDE 3P, 20A, 380V NONFUSED DISCONNECT IN NEMA TYPE 4X ENCLOSURE.
4. PROVIDE 3P, 30A, 380V NONFUSED DISCONNECT IN NEMA TYPE 1 ENCLOSURE.
5. EXTEND 13MM CONDUIT 1.5M OUTSIDE OF BLDG., 305MM BELOW GRADE.

1 ELECTRICAL POWER PLAN

DE-E-02 SCALE: 1:50

1000 0 1000mm
SCALE: 1 = 50

UNLESS OTHERWISE NOTED, LINEAR DIMENSIONS SHOWN ARE IN MILLIMETERS.

SYMBOL	DESCRIPTION	DATE	APP

Date: 10 MAY 2007
File No. AF0707
I.S.O. Sheet File Name: AF0707DC-EL02PN.dwg
Solicitation Number: –
Designed By:
Drawn By:
Checked By:

US Army Corps of Engineers Transatlantic Programs Center

ANA REGIONAL BRIGADE
PAKTIKA, AFGHANISTAN
INTERPRETER FACILITIES
DFAC 3
ELECTRICAL POWER PLAN

SHEET REFERENCE NUMBER:
DC-E-02

$DATE$
$FILE$

LIGHTING FIXTURE SCHEDULE

TYPE	DESCRIPTION	NO. OF LAMPS	LAMP TYPE	WATTS PER LAMP	VOLTAGE	MOUNTING
A	PENDANT MOUNTED INDUSTRIAL FLUORESCENT LIGHT FIXTURE WITH WIDE DISTRIBUTION REFLECTOR KIT	2	T8	36	220/50HZ	PENDANT
A1	SURFACE MOUNTED INDUSTRIAL FLUORESCENT LIGHT FIXTURE WITH WIDE DISTRIBUTION REFLECTOR KIT	2	T8	36	220/50HZ	SURFACE
B	SURFACE/PENDANT MOUNTED PRISTMIC REFLECTOR	2	T8	36	220/50HZ	SURFACE/PENDENT
B1	SURFACE MOUNTED VIRTUALLY UNBREAKABLE DIFFUSER, SOLID STEEL BODY AND FRAME, HIGH SECURITY STAINLESS BOLTS	2	T8	36	220/50HZ	SURFACE/PENDENT
C	PENDANT MOUNTED FLUORESCENT LIGHT FIXTURE WITH REFLECTOR AND ACRYLIC LENS	4	T8	36	220/50HZ	PENDANT
C1	SURFACE MOUNTED FLUORESCENT LIGHT FIXTURE WITH REFLECTOR AND ACRYLIC LENS	4	T8	36	220/50HZ	SURFACE
D	SURFACE/PENDANT MOUNTED FIXTURE SPECIAL FOR WET LOCATION	2	T8	40	220/50HZ	SURFACE
E	SURFACE/WALL MOUNTED FIXTURE SPECIAL FOR WET LOCATION	2	T8	36	220/50HZ	SURFACE OR WALL
F	WALL MOUNTED COMPACT FLUOR.	1	CF	26	220/50HZ	WALL
G	PENDANT MOUNTED INDUSTRIAL LOW BAY FIXTURE	1	HPS	150	220/50HZ	PENDANT
G1	PENDANT MOUNTED INDUSTRIAL HIGH BAY FIXTURE	1	HPS	150	220/50HZ	PENDANT
G2	PENDANT MOUNTED INDUSTRIAL LOW BAY FIXTURE	1	HPS	250	220/50HZ	PENDANT
J	EXPLOSION PROOF SURFACE MOUNTED FLUOR. FIXTURE	2	INCLUDED	36	220/50HZ	SURFACE
X1	EXIT SIGN WITH DIRECTIONAL ARROWS AS REQUIRED	2	INCLUDED	8	220/50HZ	UNIVERSAL
X2	EMERGENCY FIXTURE WITH HALOGEN LAMPS	2	HALOGEN	20	220/50HZ	WALL/SURFACE
X3	EXPLOSION PROOF EMERGENCY FIXTURE WITH HALOGEN LAMPS	2	HALOGEN	14	220/50HZ	WALL/SURFACE

BRANCH CIRCUITS WIRE SCHEDULE

220 VOLT 1ø, 3W. CIRCUITS

CIRCUIT BREAKER	CONDUCTOR
20A–1P	2 #4mm² & 1 #4mm² GND. – 20mm C.
30A–1P	2 #6mm² & 1 #6mm² GND. – 20mm C.
40A–1P	2 #10mm² & 1 #6mm² GND. – 20mm C.
50A–1P	2 #16mm² & 1 #6mm² GND. – 25mm C.
60A–1P	2 #25mm² & 1 #10mm² GND. – 25mm C.
80A–1P	2 #35mm² & 1 #10mm² GND. – 25mm C.
100A–1P	2 #50mm² & 1 #10mm² GND. – 32mm C.

380 VOLT, 3ø, 4W. CIRCUITS

20A–3P	3 #4mm² & 1 #4mm² GND. – 20mm C.
30A–3P	3 #6mm² & 1 #6mm² GND. – 20mm C.
40A–3P	3 #10mm² & 1 #6mm² GND. – 20mm C.
50A–3P	3 #16mm² & 1 #6mm² GND. – 38mm C.
60A–3P	3 #25mm² & 1 #10mm² GND. – 38mm C.
80A–3P	3 #35mm² & 1 #10mm² GND.–38mmC.
100A–3P	3 #50mm² & 1 #10mm² GND.–40mmC.

380 VOLT, 3ø,5W. CIRCUITS

20A–3P	4 #4mm² & 1 #4mm² GND. – 20mm C.
30A–3P	4 #6mm² & 1 #6mm² GND. – 20mm C.
40A–3P	4 #10mm² & 1 #6mm² GND. – 32mm C.
50A–3P	4 #16mm² & 1 #6mm² GND. – 38mm C.
60A–3P	4 #25mm² & 1 #10mm² GND. – 38mm C.

NOTE:

1. TYPE MC CABLE SHALL INCLUDE FULL SIZE INSULATED GROUND CONDUCTOR. SIZES AS INDICATED IN SCHEDULE.

UNLESS OTHERWISE NOTED, LINEAR DIMENSIONS SHOWN ARE IN MILLIMETERS.

SYMBOL	DESCRIPTION	DATE	APP

Designed By:
Date: 10 MAY 2007
Drawn By:
File No. AF0707
Checked By:
I.S.O. Sheet File Name: AF0707DC–EL020N.dwg
Solicitation Number: –

US Army Corps of Engineers Transatlantic Programs Center

ANA REGIONAL BRIGADE
PAKTIKA, AFGHANISTAN
INTERPRETER FACILITIES
DFAC 3
ELECTRICAL
FIXTURE SCHEDULE
AND BRANCH CIRCUIT

SHEET REFERENCE NUMBER:
DC–GE–02

$DATE$
$FILE$

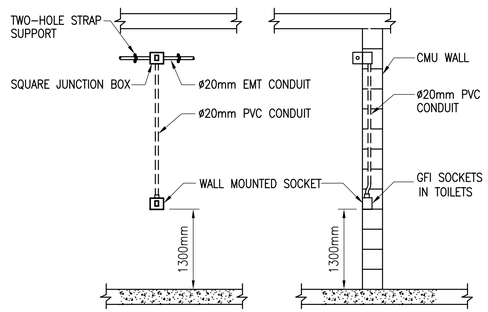

1 GENERAL INSTALLATION DETAIL FOR RECESSED SURFACE MOUNTED SOCKET IN TOILETS

SCALE: N.T.S

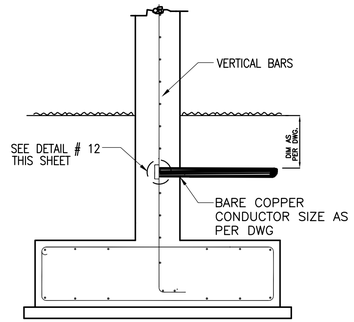

2 TYPICAL STRUCTURAL BONDING DETAIL

SCALE: N.T.S

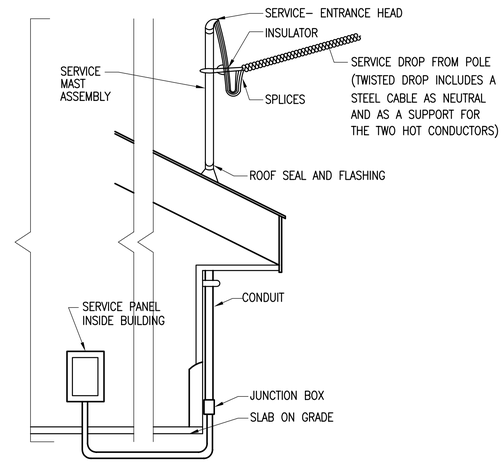

3 PANEL BOARD FEEDING FROM BOTTOM (FOR PANELS NOT IN EXTERIOR WALL)

SCALE: N.T.S.

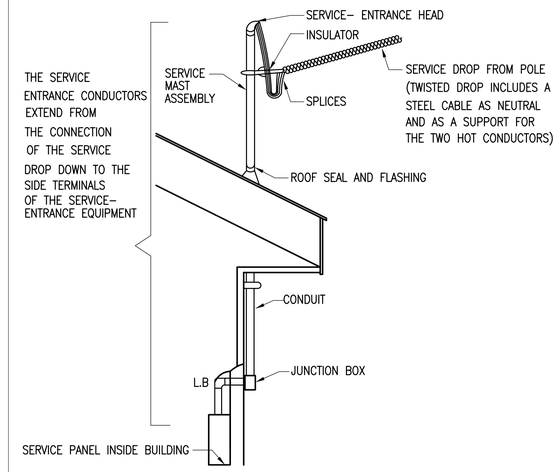

4 PANEL BOARD FEEDING FROM TOP (FOR PANELS ON EXTERLOR WALL)

SCALE: N.T.S.

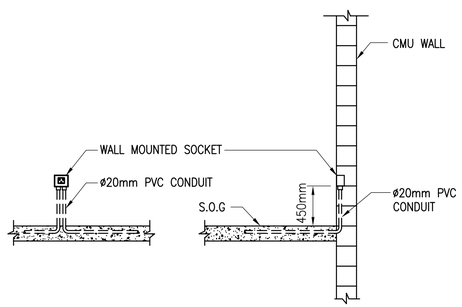

5 GENERAL INSTALLATION DETAIL FOR RECESSED SOCKET (CONDUIT EMBEDDED IN SLAB)

SCALE: N.T.S

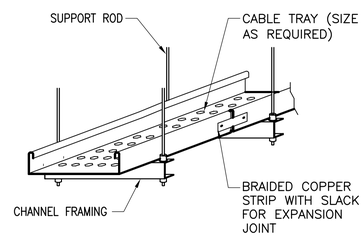

6 CABLE TRAY CROSSING EXPANSION JOINT

SCALE: N.T.S

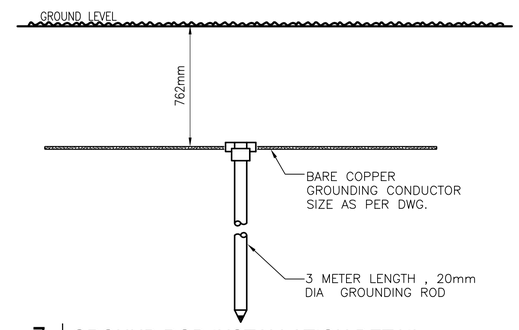

7 GROUND ROD INSTALLATION DETAIL

SCALE: N.T.S

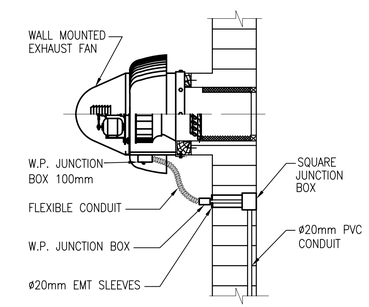

8 GENERAL INSTALLATION DETAIL FOR EXHAUST FAN (CONDUIT EMBEDDED)

SCALE: N.T.S

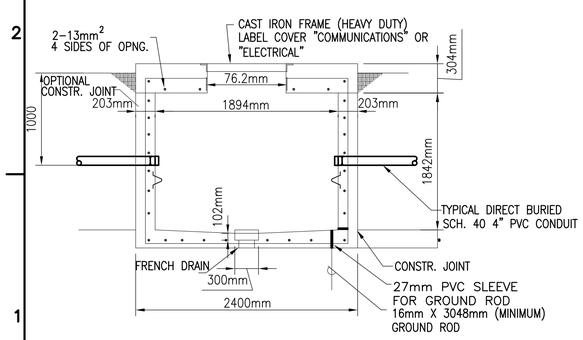

9 MANHOLE DETAIL (2400x2400mm)

SCALE: N.T.S.

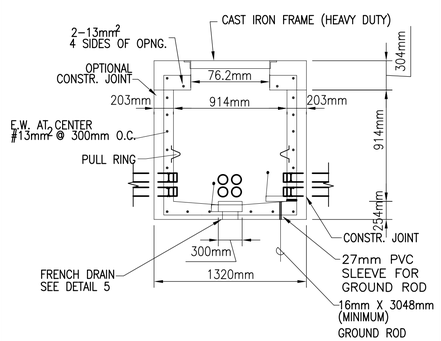

10 HAND HOLE DETAIL (1320x1320mm)

SCALE: N.T.S.

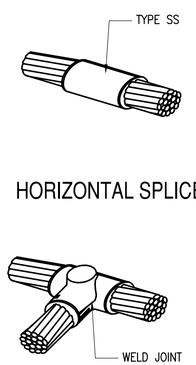

11 T-CONNECTION WELDING POINT

SCALE: N.T.S.

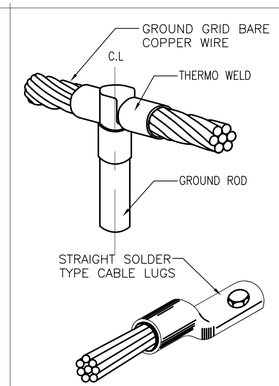

12 GROUNDING CABLE LUGS

SCALE: N.T.S.

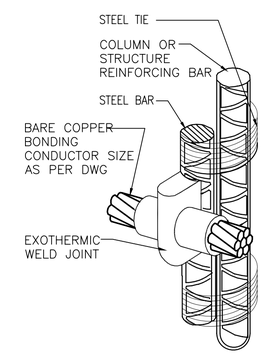

13 WELDING TO STEEL REINFORCING BAR

SCALE: N.T.S.

UNLESS OTHERWISE NOTED, LINEAR DIMENSIONS SHOWN ARE IN MILLIMETERS.

SYMBOL	DESCRIPTION	DATE	APP

Date: 10 MAY 2007
File No. AF0707
I.S.O. Sheet File Name: AF0707DC-ELO2DT.dwg
Solicitation Number: –
Designed By:
Drawn By:
Checked By:

US Army Corps of Engineers Transatlantic Programs Center

ANA REGIONAL BRIGADE
PAKTIKA, AFGHANISTAN
INTERPRETER FACILITIES
DFAC 3
ELECTRICAL DETAILS

SHEET REFERENCE NUMBER:
DC-DE-02

$DATE$
$FILE$

PANEL "PP" SCHEDULE

200 AMPS MAIN CIRCUIT BREAKER 380DELTA/220 VOLTS 3 PHASE 5 WIRE 10,000 AIC

MOUNTING: SURFACE

NO	DESCRIPTION	BKR/P	VA A		VA B		VA C		BKR/P	DESCRIPTION	NO
1	LIGHTS - 103,106-109	20/1	564	3000					20/3	DIESEL HEAT/EVAPORATOR UNIT	2
3	LIGHTS - 101,102,104,105	20/1			472	3000					4
5	LIGHTS/FANS - 101,102,104,105	20/1					400	3000			6
7	LIGHTS/FANS - 109, 106	20/1	500	990					20/1	RECEPS - 101 & EXTERIOR	8
9	WASTE DISPOSAL - 101	20/1			2640	1500			20/1	FREEZER - 101	10
11	FRIDGE - 101	20/1					1500	19000	100/1	ELECTRIC RANGE-6 BURNER - 101	12
13	STEAMER - 101	40/1	6000	5700					40/3	ELECTRIC FRYER - 101	14
15	HOOD (EF-DF-03) - 101	20/1			660	5700					16
17	ICE MACHINE - 101	20/1					1200	5700			18
19	RECEPS - 102	20/1	1320	6000					40/1	BUFFET, HOT FOOD - 102	20
21	ELECTRIC GRIDDLE - 102	80/1			14250	1600			20/1	HOOD (EF-DF-04) - 102	22
23	EXHAUST FAN AND RECEP - 104	20/1					600	990	20/1	RECEPS - 105	24
25			4000	1650					20/1	RECEPS - 106,109, & EXTERIOR	26
27	WATER HEATER - 105	30/1			4000	330			20/1	RECEP - 107	28
29							4000	330	20/1	RECEP - 108	30
31	RECEPS - 109 & EXTERIOR	20/1	1980	1650					20/1	BEV FRIDGE & TEA BREWER - 109	32
33	FIRE DETECTION	20/1			1000	2220			20/1	UNIT HEATER, EXHAUST FAN - 104	34
35	FIRE DETECTION	20/1					660	2220	20/1	UNIT HEATER, EXHAUST FAN - 108	36
37	SPARE	20/1		2000					20/1	UNIT HEATER - 107	38
39	SPARE	20/1							20/1	SPARE	40
41	SPARE	20/1							20/1	SPARE	42
		TOTAL	35354		37372		39600				
CONNECTED KVA:		112.33 KVA									
CONNECTED AMPS		170.66 AMPS									

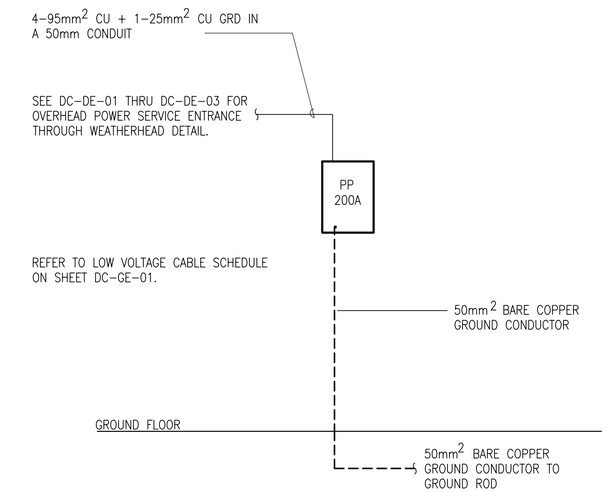

1 POWER RISER DIAGRAM
DC-SE-01 SCALE: N.T.S.

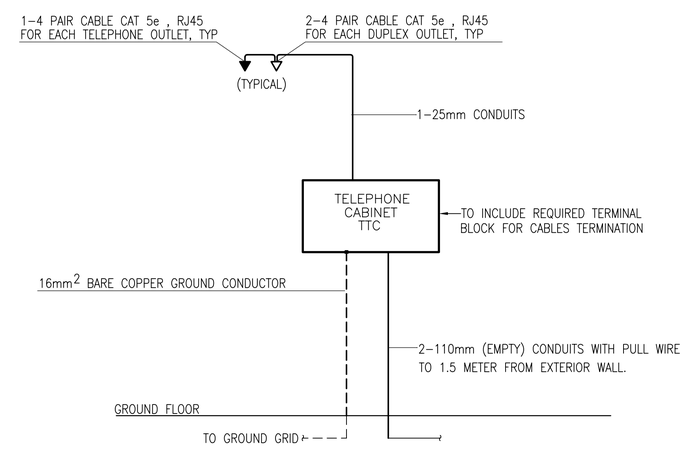

2 TELEPHONE RISER DIAGRAM
DC-SE-01 SCALE: N.T.S.

UNLESS OTHERWISE NOTED, LINEAR DIMENSIONS SHOWN ARE IN MILLIMETERS.

SYMBOL	DESCRIPTION	DATE	APP

Date: 10 MAY 2007
File No. AF0707
I.S.O. Sheet File Name: AF0707DC-EL01SC.dwg
Solicitation Number: –
Designed By:
Drawn By:
Checked By:

US Army Corps of Engineers Transatlantic Programs Center

ANA REGIONAL BRIGADE
PAKTIKA, AFGHANISTAN
INTERPRETER FACILITIES
DFAC 3
ELECTRICAL
PANEL SCHEDULES & RISERS

SHEET REFERENCE NUMBER:
DC-SE-01

$DATE$
$FILE$

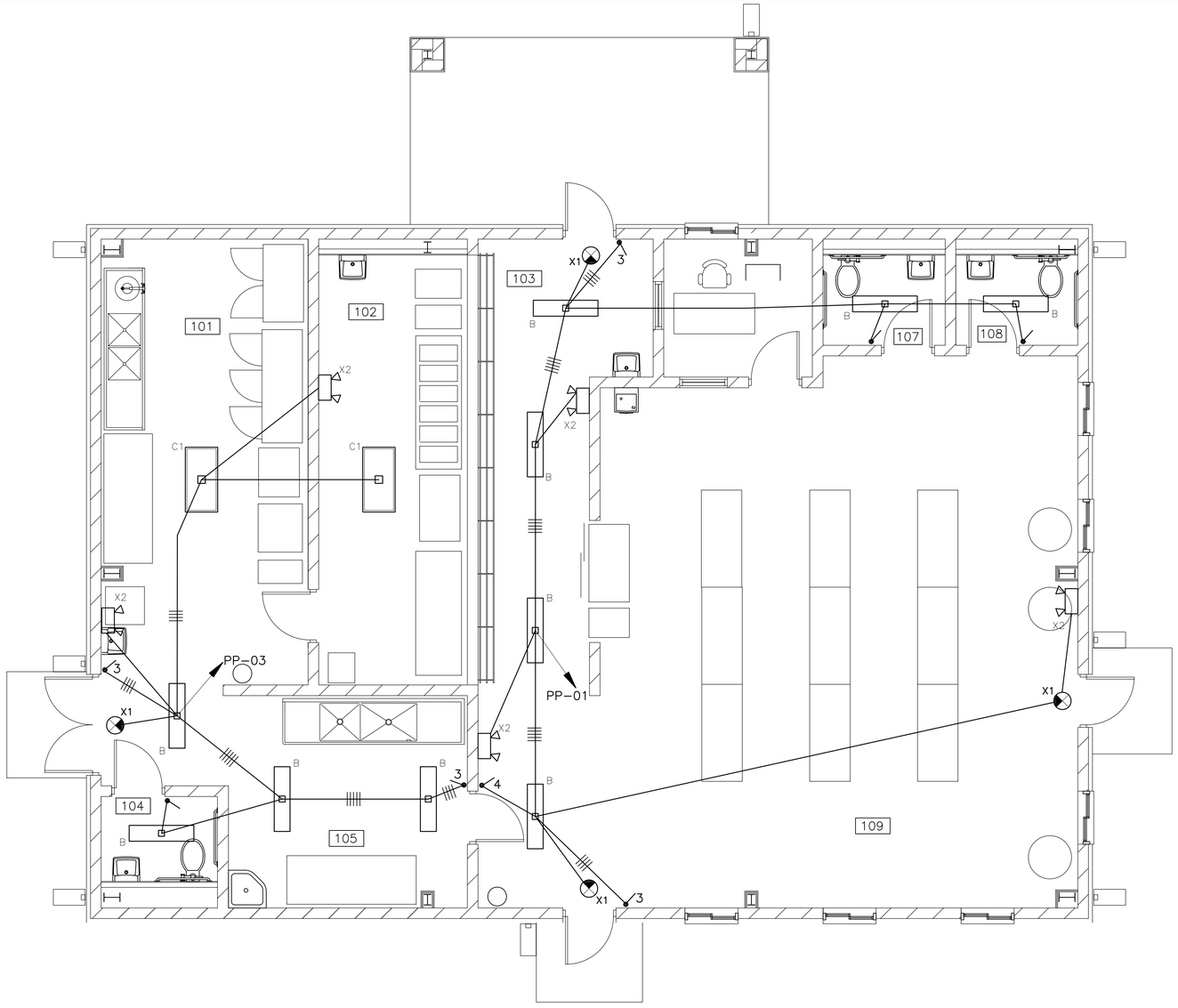

1 ELECTRICAL LIGHTING PLAN

DC-E-01 SCALE: 1:50

NOTES:

FOR LOCATIONS OF CEILING FAN WITH LIGHT FIXTURE, SEE POWER PLAN DC-E-02.

1000 0 1000mm
SCALE: 1 = 50

UNLESS OTHERWISE NOTED, LINEAR DIMENSIONS SHOWN ARE IN MILLIMETERS.

SYMBOL	DESCRIPTION	DATE	APP

Date: 10 MAY 2007
File No.: AF0707
I.S.O. Sheet File Name: AF0707DC-EL01PN.dwg
Solicitation Number: –
Designed By:
Drawn By:
Checked By:

US Army Corps of Engineers Transatlantic Programs Center

ANA REGIONAL BRIGADE
PAKTIKA, AFGHANISTAN
INTERPRETER FACILITIES
DFAC 3
ELECTRICAL LIGHTING PLAN

SHEET REFERENCE NUMBER:
DC-E-01

$DATE$
$FILE$

LIGHTING LEGEND:

	ONE LAMP FLUORESCENT L.F.
	TWO LAMPS FLUORESCENT L.F.
	FOUR LAMPS FLUORESCENT L.F.
	FLOOD LIGHT, WALL MOUNTED
	6 METER, LIGHTING POLE WITH FLOOD LIGHT
	MIRROR WALL MOUNTED LIGHT FIXTURE
	WALL MOUNTED FIXTURE
	PENDANT MOUNTED INDUSTRIAL, LOW/HIGH BAY L.F.
X1	SURFACE (WALL/CELING)ONE FACE EXIT SIGN WITH BACK UP BATTERY.
X2	WALL MOUNTED EMERGENCY LIGHT WITH BACK UP BATTERY.
D	DIMMING SWITCH, 220V, 16AMP MOUNTED HEIGHT = 1300mm ABOVE FINISH FLOOR LEVEL FROM THE CENTER OF SWITCH
	ONE WAY SWITCH, 220V, 16AMP MOUNTED HEIGHT = 1300mm ABOVE FINISH FLOOR LEVEL FROM THE CENTER OF SWITCH
3	3 WAY SWITCH, 220V, 16AMP MOUNTED HEIGHT = 1300mm ABOVE FINISH FLOOR LEVEL FROM THE CENTER OF SWITCH
4	4 WAY SWITCH, 220V, 16AMP MOUNTED HEIGHT = 1300mm ABOVE FINISH FLOOR LEVEL FROM THE CENTER OF SWITCH

LOW CURRENT LEGEND:

TTC	TELEPHONE TERMINAL CABINET, SEE NOTE 3
	EQUIPMENT AS IDENTIFIED ON PLANS
	TELPHONE/DATA OUTLET DUPLEX, RJ-45, 4 PAIR CATEGORY 5E, SEE NOTE 2 & 5
FP	FIRE ALARM BOX FOR FUTURE INSTALLATION OF SELF SMOKE DETECTOR. LOCATE BOX A MIN. OF 1.0M FROM TIP OF FAN BLADE.
	TELEPHONE OUTLET ,RJ-45,4 PAIR CATEGORY 5E, SEE NOTE #2, 5

GROUNDING LEGEND:

	3 METER LENGTH, 0.02m DIAMETER , COPPER GROUNDING ROD
	UNDERGROUND BARE COPPER CONDUCTOR FOR CONNECTION BETWEEN GROUNDING RODS SIZE AS INDICATED ON THE PLAN
T	T-SPLICE EXOTHERMIC WELD
	AIR TERMINAL

POWER LEGEND:

	ELECTRICAL PANEL BOARD, SEE NOTE 4
MDP	MAIN DISTRIBUTION PANEL (MDP)
	NON FUSED DISCONNECT SWITCH ,220V ,50HZ ,20A (U.O.N)
	COMBINATION MOTOR STARTER SWITCH ,220V ,50HZ ,20A (U.O.N)
M	MANUAL MOTOR STARTER, WITH OVER LOAD PROTECTION RATING AS REQUIRED BY EXHAUST FAN MANUFACTURER MOUNTED HEIGHT = 1300mm ABOVE FINISH FLOOR LEVEL
3M	MOTOR RATED 3-SPEED SWITCH FOR CEILING FAN, 220V, 20AMP MOUNTED HEIGHT = 1300mm ABOVE FINISH FLOOR LEVEL
	RECESSED MOUNTED DUPLEX RECEPTACLES 1PH, 240V, 16A, 50HZ GROUNDING DIN TYPE. MOUNTING HEIGHT = 450mm ABOVE FINISH FLOOR LEVEL
GFI	RECESSED MOUNTED SINGLE RECEPTACLES 1PH, 240V, 16A, 50HZ GROUNDING DIN TYPE WITH GROUND FAULT INTERRUPTER AND SWITCH. MOUNTING HEIGHT =1300mm ABOVE FINISH FLOOR
CEE	RECESSED MOUNTED DUPLEX RECEPTACLES 3PH, 380V, 30A, 50HZ GROUNDING DIN TYPE MOUNTING HEIGHT =450mm ABOVE FINISH FLOOR
G	RECESSED MOUNTED DUPLEX RECEPTACLE LABEL INDICATE (HOSPITAL GRAD) 1PH, 240V, 16A, 50HZ GROUNDING DIN TYPE . MOUNTING HEIGHT =500mm ABOVE FINISH FLOOR INSULATED 4mm GROUNDING WIRE PER EACH RECEPTACLE
	SINGLE POWER SOCKET OUTLET, 220V, 50HZ, 20A MOUNTING HEIGHT = 450mm (U.O.N.)
PB	100mm x 100mm PULL BOX.
J	100mm x 100mm JUNCTION BOX
J CL	JUNCTION BOX FOR CEILING FAN WITH LIGHTS, SEE MECH STD. DETAILS
C.B	CIRCUIT BREAKER 30 AMP , 3 POLE , 380V , 50HZ
M	MOTORIZE DAMPER
REL	RELAY PANEL
M	MOTOR
H	HEATER
B XX-E-01	DETAIL DESIGNATION, TOP NUMBER INDICATE DETAIL NUMBER, BOTTOM LETTER INDICATES SHEET REF. NUMBER.

LIGHT FIXTURE NOTES:

1. ALL PENDANT MOUNTED FIXTURES ARE TO INCLUDE MANUFACTURERS "BALL-HANGER" TYPE CANOPY TO COMPENSATE FOR ROOF PITCH. FIELD CUT TO LENGTH.
2. ALL LIGHTING FIXTURES TO BE PROVIDED WITH "STANDARD" HIGH POWER FACTOR "ELECTRONIC" BALLASTS, UNLESS NOTED OTHERWISE.

LINE TYPE:

- - - - - - -	EXPOSED CONDUIT
————	EMBEDDED OR CONCEALED CONDUIT
- - -|- - - -	LIGHTNING PROTECTION CONDUCTOR

ABBREVIATIONS:

A	AMP	L.C.	LIGHTING CONTACTOR
A.H.U.	AIR HANDLING UNIT	L.F.	LIGHT FIXTURE
A/C	AIR CONDITIONING	LPI	LIGHTNING PROTECTION INSTITUTE
A.C.U.	AIR CONDITION UNIT	M	METER
A.F.F.	ABOVE FINNISH FLOOR LEVEL	MAX	MAXIMUM
C	CONDUIT	MD	MOTORIZE DAMPER
CB	CIRCUIT BREAKER	MECH	MECHANICAL
CHH	COMMUNICATION HANDHOLE	MLO	MAIN LUGS ONLY
C.L.	CENTERLINE	mm	MILLIMETER
C.O.E.	CORE OF ENGINEERS	P.A.C.U.	PACKAGE AIR CONDITION UNIT
CU	CONDENSING UNIT	PVC	POLYVINYL CHLORIDE
ø, DIA	DIAMETER	RM	ROOM
EF	EXHAUST FAN	SF	SUPPLY FAN
EHH	ELECTRICAL HANDHOLE	S.U.	SPLIT UNIT
EMT	ELECTRIC METALLIC TUBING	TRANS	TRANSFORMER
EWH	ELECTRICAL WATER HEATER	TTC	TELEPHONE TERMINAL CABINET
FACP	FIRE ALARM CONTROL PANEL	TYP	TYPICAL
GFI	GROUND FAULT INTERRUPTER	TV	TELEVISION
GRS	GALVANIZED RIGID STEEL	U.O.N.	UNLESS OTHERWISE NOTED
HZ	HERTZ	V	VOLT
IR	IMPULSE RELAY	W	WATT
IL	INVERTED LEVEL	WP	WEATHER PROOF
UTP	UNSHIELDED TWISTED PAIR	WR	WELDING RECEPTACLE
N.F.D.S	NON FUSED DISCONNECT SWITCH	RP	RECALCULATION PUMP

GENERAL NOTES:

1. MOUNTING HEIGHT OF SWITCHES 1.3M AFF UNLESS OTHERWISE NOTED.
2. MOUNT RECEPTACLES AND TELPHONE/DATA OUTLETS 450mm AFF UNLESS OTHERWISE NOTED. W=MOUNT 1.4M AFF.
3. MOUNT TELEPHONE TERMINAL CABINET (TTC) 1800mm FROM THE TOP OF CABINET TO FLOOR.
4. MOUNT ELECTRICAL PANELS 1800mm A.F.F. TO THE TOP OF THE PANEL.
5. TELEPHONE/DATA CABLE SHALL BE CAT 5E, 4 PAIRS
6. FOR EXACT LOCATION OF MECHANICAL EQUIPMENT REFER TO MECHANICAL DESIGN DRAWINGS.
7. EQUIPMENT SHALL BE RATED FOR 40 DEGREES C AND 2000 METERS (ABOVE SEA LEVEL) ELEVATION
8. THE GROUNDING RESISTANCE SHALL BE NO HIGHER THAN 25 OHMS , EXCEPT IN THE UPS AND EQUIPMENT ROOM SHALL BE 5 OHMS MEASURED MIN OF 48 HRS AFTER RAINFALL, ADDITIONAL RODS SHOULD BE USED TO ACHIEAVED THE REQUIRED RESISTANCE
9. ALL LIGHT FIXTURES SHALL BE SEISMICALLY BRACED.
10. ALL PANEL BOARD AIC RATINGS AS SHOWN ON SCHEDULES.
11. THE ELECTRICAL WIRING SHOWN ON PLAN DRAWINGS IS DIAGRAMMATIC AND INTENDED TO IDENTIFY THE CIRCUIT ARRANGEMENT FOR EACH AREA. THE CONDUIT CAN BE COMBINED FOR DIFFERENT CIRCUITS, PROVIDED THE INSTALLATION MEETS THE NEC, WITH NO MORE THAN 3 CONNECTIVE CIRCUITS IN ANY CONDUIT, SUCH AS 1, 3, 5 OR 2, 4, 6, ETC. THE 3 CIRCUITS CAN SHARE ONE NEUTRAL CONDUCTOR.

UNLESS OTHERWISE NOTED, LINEAR DIMENSIONS SHOWN ARE IN MILLIMETERS.

SYMBOL	DESCRIPTION	DATE	APP

Designed By:
Date: 10 MAY 2007
Drawn By:
File No. AF0707
Checked By:
I.S.O. Sheet File Name: AF0707DC-EL01GN.dwg
Solicitation Number: -

US Army Corps of Engineers Transatlantic Programs Center

ANA REGIONAL BRIGADE
PAKTIKA, AFGHANISTAN
INTERPRETER FACILITIES
DFAC 3
ELECTRICAL
LEGEND AND NOTES

SHEET REFERENCE NUMBER:
DC-GE-01

$DATE$
$FILE$

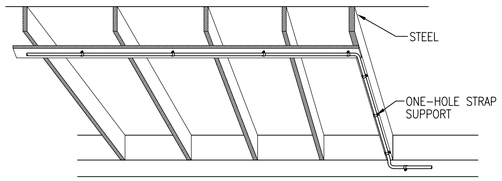

1 SURFACE MOUNTED CONDUIT SUPPORT

SCALE: N.T.S

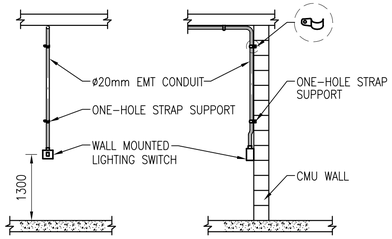

NOTE:-
WALL MOUNTED LIGHTING OUTLETS SHOULD BE CENTRAL ON A BLOCK, NOT BETWEEN TWO BLOCKS.

2 GENERAL INSTALLATION DETAIL FOR LIGHTING SWITCH (CONDUIT EXPOSED)

SCALE: N.T.S

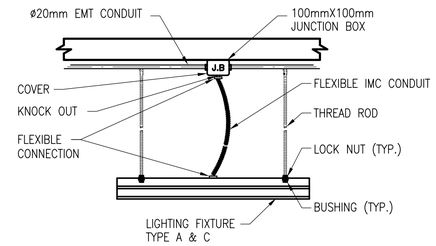

3 PENDANT LIGHT FIXTURE DETAIL (NOT USED)

SCALE: N.T.S

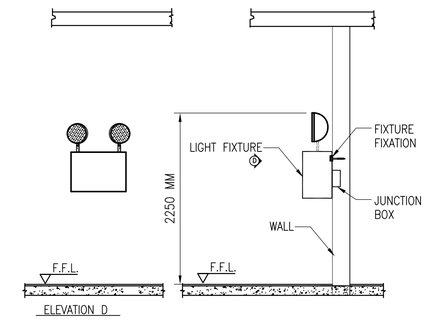

4 SURFACE EMERGENCY LIGHT FIXTURE DETAIL

SCALE: N.T.S

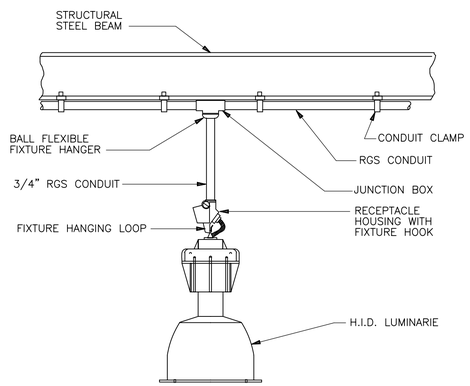

5 H.I.D. LUMINARIE PENDANT MOUNTED

SCALE: N.T.S

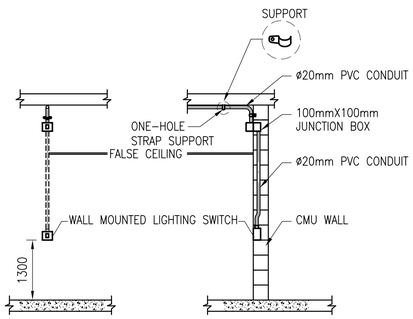

6 GENERAL INSTALLATION DETAIL FOR LIGHT SWITCH (CONDUIT CONCEALED)

SCALE: N.T.S

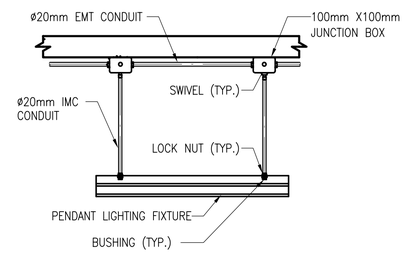

7 INSTALLATION OF LIGHTING FIXTURE IN SEISMIC BUILDING

SCALE: N.T.S

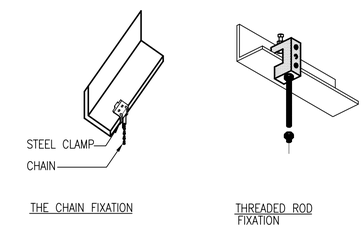

8 GENERAL SUPPORT DETAIL

SCALE: N.T.S

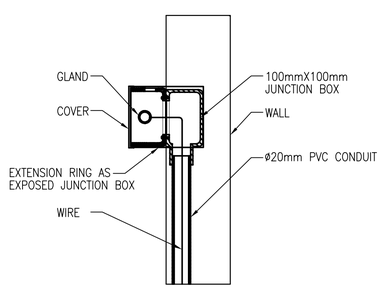

9 CONVERTING FROM EXPOSED TO EMBEDDED ROUTING IN WALL

SCALE: N.T.S

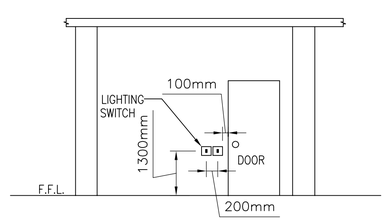

NOTE:-
THE LOCATION OF THE CONDUIT FEEDING THE FIRST SWITCH TO BE 100mm FROM THE DOOR OPENING

10 LIGHT SWITCH MOUNTING

SCALE: N.T.S

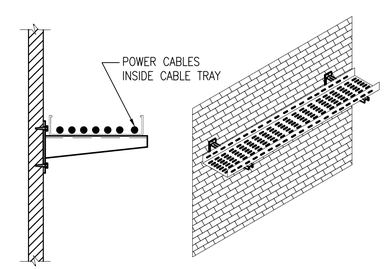

11 GENERAL INSTALLATION DETAIL FOR WALL MOUNTED CABLE TRAY

SCALE: N.T.S

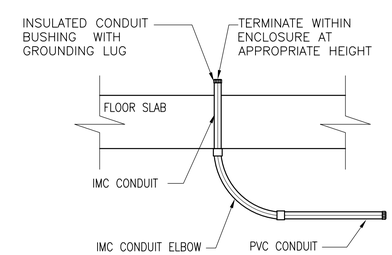

12 TYPICAL CONDUIT STUB-UP THROUGH FLOOR SLAB FOR FEEDING EQUIPMENT

SCALE: N.T.S

UNLESS OTHERWISE NOTED, LINEAR DIMENSIONS SHOWN ARE IN MILLIMETERS.

SYMBOL	DESCRIPTION	DATE	APP

Date: 10 MAY 2007
File No.: AF0707
I.S.O. Sheet File Name: AF0707DC-EL01DT.dwg
Solicitation Number: –
Designed By:
Drawn By:
Checked By:

US Army Corps of Engineers Transatlantic Programs Center

ANA REGIONAL BRIGADE
PAKTIKA, AFGHANISTAN
INTERPRETER FACILITIES
DFAC 3
ELECTRICAL DETAILS

SHEET REFERENCE NUMBER:
DC-DE-01

$DATE$
$FILE$

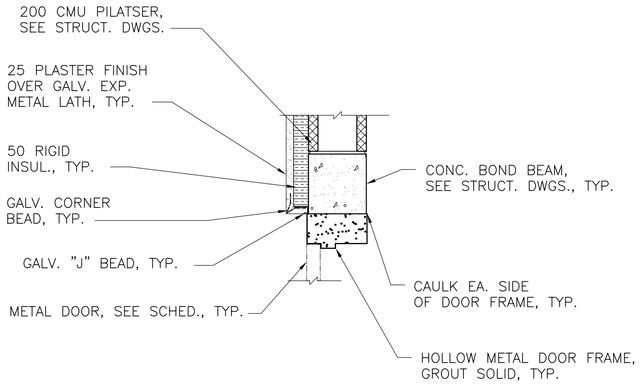

1 DETAIL - EXTERIOR DOOR HEAD

DC-A-01 REF. SCALE: 1:10

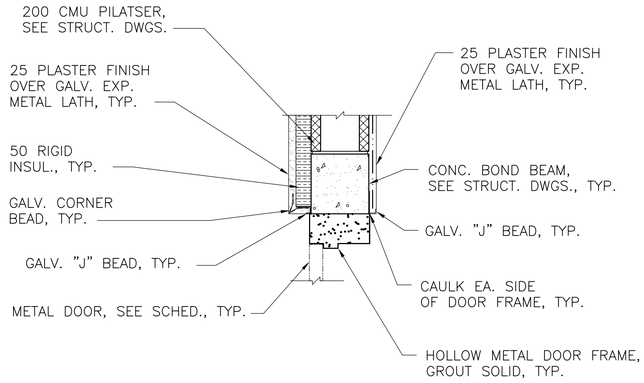

4 DETAIL - EXTERIOR DOOR HEAD

DC-A-01 REF. SCALE: 1:10

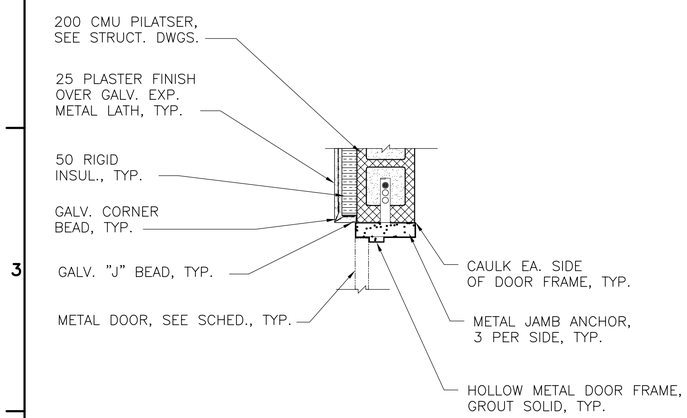

2 DETAIL - EXTERIOR DOOR JAMB

DC-A-01 REF. SCALE: 1:10

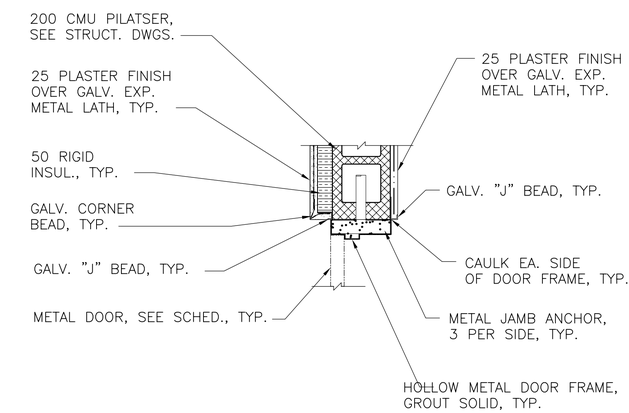

5 DETAIL - EXTERIOR DOOR JAMB

DC-A-01 REF. SCALE: 1:10

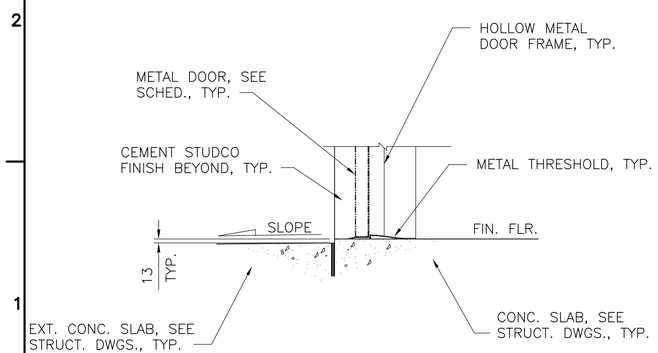

3 DETAIL - EXTERIOR DOOR SILL

DC-A-01 REF. SCALE: 1:10

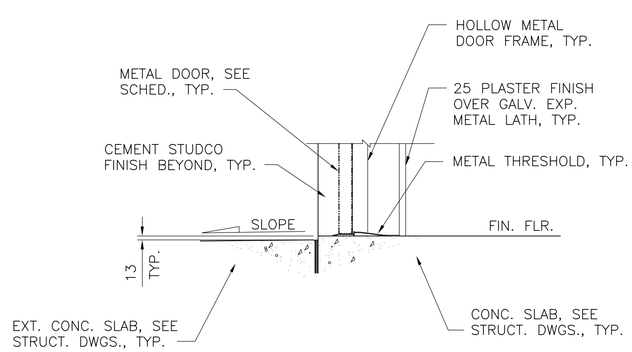

6 DETAIL - EXTERIOR DOOR SILL

DC-A-01 REF. SCALE: 1:10

GRAPHIC SCALE:

200 0 200mm

SCALE: 1 = 10

UNLESS OTHERWISE NOTED, LINEAR DIMENSIONS SHOWN ARE IN MILLIMETERS.

SYMBOL	DESCRIPTION	DATE	APR

Designed By: R. BROWN
Date: 10 MAY 2007
Drawn By: D. GRIFFIN
File No. AF0707
Checked By: R. BROWN
I.S.O. Sheet File Name: AF0707DC-AR14DT.dwg
B. THOMAS
Solicitation Number: –

US Army Corps of Engineers Transatlantic Programs Center

ANA REGIONAL BRIGADE
PAKTIKA, AFGHANISTAN
INTERPRETER FACILITIES
DFAC 3

DOOR & WINDOW DETAILS

SHEET REFERENCE NUMBER:
DC-A-14

$DATE$
$FILE$

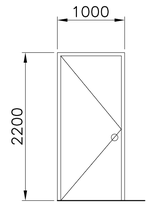

1 DOOR (D1)
SCALE: 1:40

1A DOOR (D1A) 20–MIN. FIRE RATED
SCALE: 1:40

1B DOOR (D1B) 45–MIN. FIRE RATED
SCALE: 1:40

1C DOOR (D1C) INSULATED
SCALE: 1:40

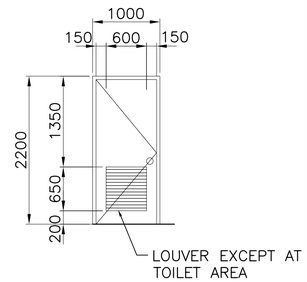

2 DOOR (D2)
SCALE: 1:40

2A DOOR (D2A) 20–MIN. FIRE RATED
SCALE: 1:40

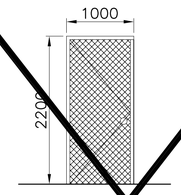

3 DOOR (D3)
SCALE: 1:40

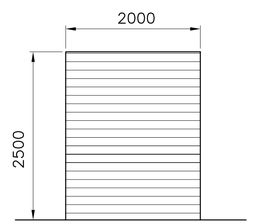

4 DOOR (D4)
SCALE: 1:40

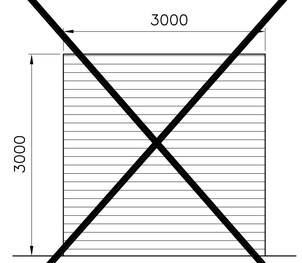

5 DOOR (D5)
SCALE: 1:40

5A DOOR (D5A)
SCALE: 1:40

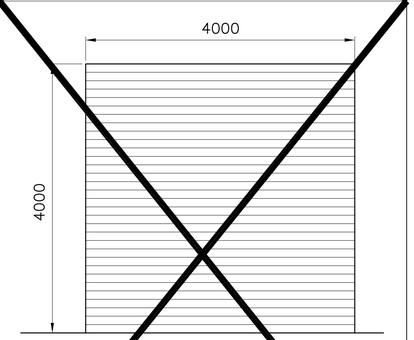

6 DOOR (D6)
SCALE: 1:40

6A DOOR (D6A)
SCALE: 1:40

DOOR SCHEDULE

DOOR NO.	DIMENSION WIDTH	DIMENSION HEIGHT	PANEL NUMBER	OPENING SYSTEM	HDWR. NO.	MATERIAL
D1	1000	2200	1	HINGED		HM DOOR IN HM FRAME
D1A	1000	2200	1	HINGED		HM DOOR IN HM FRAME; 20 MIN FIRE RATED
D1B	1000	2200	1	HINGED		HM DOOR IN HM FRAME; 45 MIN FIRE RATED
D1C	1000	2200	1	HINGED		HM DOOR IN HM FRAME; INSULATED
D2	3000	3000	1	HINGED		HM DOOR IN HM FRAME W/ LOUVER
D2A	3000	4000	1	HINGED		HM DOOR IN HM FRAME W/ FIRE DAMPER FUSIBLE LINK LOUVER 20 MIN FIRE RATED
D3	1000	2200	1	HINGED		WELDED WIRE MESH IN STEEL FRAME
D4	2000	2500	1	ROLL–UP		STEEL DOOR & FRAM, MANUALLY OPERATED, INSULATED
D5	3000	3000	1	ROLL–UP		STEEL DOOR & FRAM, MANUALLY OPERATED, INSULATED
D5A	3000	3000	1	ROLL–UP		STEEL DOOR & FRAM, MANUALLY OPERATED, UNINSULATED
D6	4000	4000	1	ROLL–UP		STEEL DOOR & FRAM, MANUALLY OPERATED, INSULATED
D6A	4000	4000	1	ROLL–UP		STEEL DOOR & FRAM, MANUALLY OPERATED, INSULATED
D7	1000	2200	1	HINGED		HM DOOR IN HM FRAME W/ LAMINATED GLAZING
D8	1000	2200	1	HINGED		HM DOOR IN HM FRAME; 90 MIN FIRE RATED. WIRE GLASS
D9	1000	1900	2	HINGED		HM DOOR IN HM FRAME, INSULATED

WINDOW SCHEDULE

WINDOW NUMBER	DIMENSION WIDTH	DIMENSION HEIGHT	DIMENSION SILL HEIGHT	PANEL NUMBER	OPENING SYSTEM	DESCRIPTION
W1	1000	1000	1700	2	SLIDING	ALUM. PANELS W/TRANSPARENT 6MM GLASS METAL SILL AND FIXED INSECT METAL SCREEN
W4	900	1200	1000	1	FIXED	HM FRAME W/6MM LAMINATED GLASS

NOTES:

1. FOR HARDWARE SET DESCRIPTION SEE SPECIFICATIONS SECTION.
2. ITEMS BLOCKED OUT, OR LINED THROUGH, DO NOT APPLY TO THIS FACILITY.
3. ALL GLAZING SHALL BE LAMINATED EXCEPT WHERE NOTED OTHERWISE.

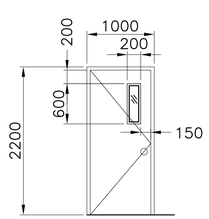

7 DOOR (D7)
SCALE: 1:40

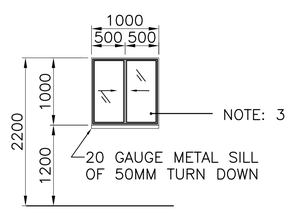

8 WINDOW (W1)
SCALE: 1:40

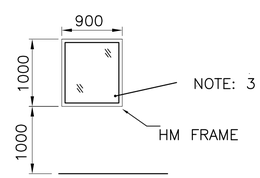

9 WINDOW (W4)
SCALE: 1:40

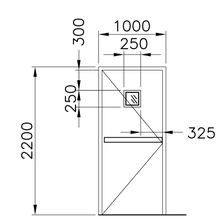

10 DOOR (D8) 90–MIN. FIRE RATED
SCALE: 1:40

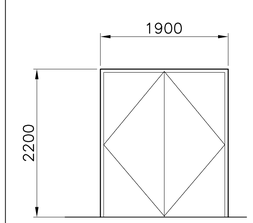

11 DOOR (D9)
SCALE: 1:40

GRAPHIC SCALE:
200 0 200mm
SCALE: 1 = 10

UNLESS OTHERWISE NOTED, LINEAR DIMENSIONS SHOWN ARE IN MILLIMETERS.

SYMBOL	DESCRIPTION	DATE	APP.

Designed By: R. BROWN
Date: 10 MAY 2007
Drawn By: D. GRIFFIN
File No. AF0707
Checked By: R. BROWN
I.S.O. Sheet File Name: AF0707DC–AR13SC.dwg
B. THOMAS
Solicitation Number: –

US Army Corps of Engineers Transatlantic Programs Center

ANA REGIONAL BRIGADE
PAKTIKA, AFGHANISTAN
INTERPRETER FACILITIES
DFAC 3

DOOR & WINDOW SCHEDULE

SHEET REFERENCE NUMBER:
DC–A–13

$DATE$
$FILE$

FINISH SCHEDULE

ROOM NO.	ROOM NAME	FLOOR	CEILING	INTERIOR WALLS				REMARKS
				NORTH	EAST	SOUTH	WEST	
101	KITCHEN	F3	C1	W2	W2	W2	W2	–
102	SERVING	F3	C1	W2	W2	W2	W2	–
103	SERVING LINE	F1	C1	W1	W1	W1	W1	–
104	TOILET	F3	C1	W1	W1	W1	W1	–
105	SCULLERY	F3	C1	W2	W2	W2	W2	–
106	OFFICE	F1	C1	W1	W1	W1	W1	–
107	MALE TOILET	F1	C1	W1	W1	W1	W1	–
108	FEMALE TOILET	F1	C1	W1	W1	W1	W1	–
109	SEATING AREA	F1	C1	W1	W1	W1	W1	–

FINISHING SCHEDULE LEGEND	
FLOOR	
F1	TERRAZO TILE
F2	SEALED CONCRETE
F3	QUARRY TILE
WALL	
W1	CMU W/ PAINTED PLASTER
W2	CERAMIC TILE
W3	PAINTED CMU
CEILING	
C1	PAINTED 19 MM PLASTER
C2	PAINTED EXPOSED PLYWOOD
C3	PAINTED EXPOSED CONRETE

GRAPHIC SCALE:

200 0 200mm

SCALE: 1 = 10

UNLESS OTHERWISE NOTED, LINEAR DIMENSIONS SHOWN ARE IN MILLIMETERS.

SYMBOL	DESCRIPTION	DATE	APP.

Designed By: R. BROWN
Drawn By: C.V. KLING
Checked By: R. BROWN
B. THOMAS

Date: 10 MAY 2007
File No. AF0707
I.S.O. Sheet File Name: AF0707DC-AR12SC.dwg
Solicitation Number: –

US Army Corps of Engineers Transatlantic Programs Center

ANA REGIONAL BRIGADE
PAKTIKA, AFGHANISTAN
INTERPRETER FACILITIES
DFAC 3

FINISH SCHEDULE

SHEET REFERENCE NUMBER:
DC–A–12

$DATE$
$FILE$

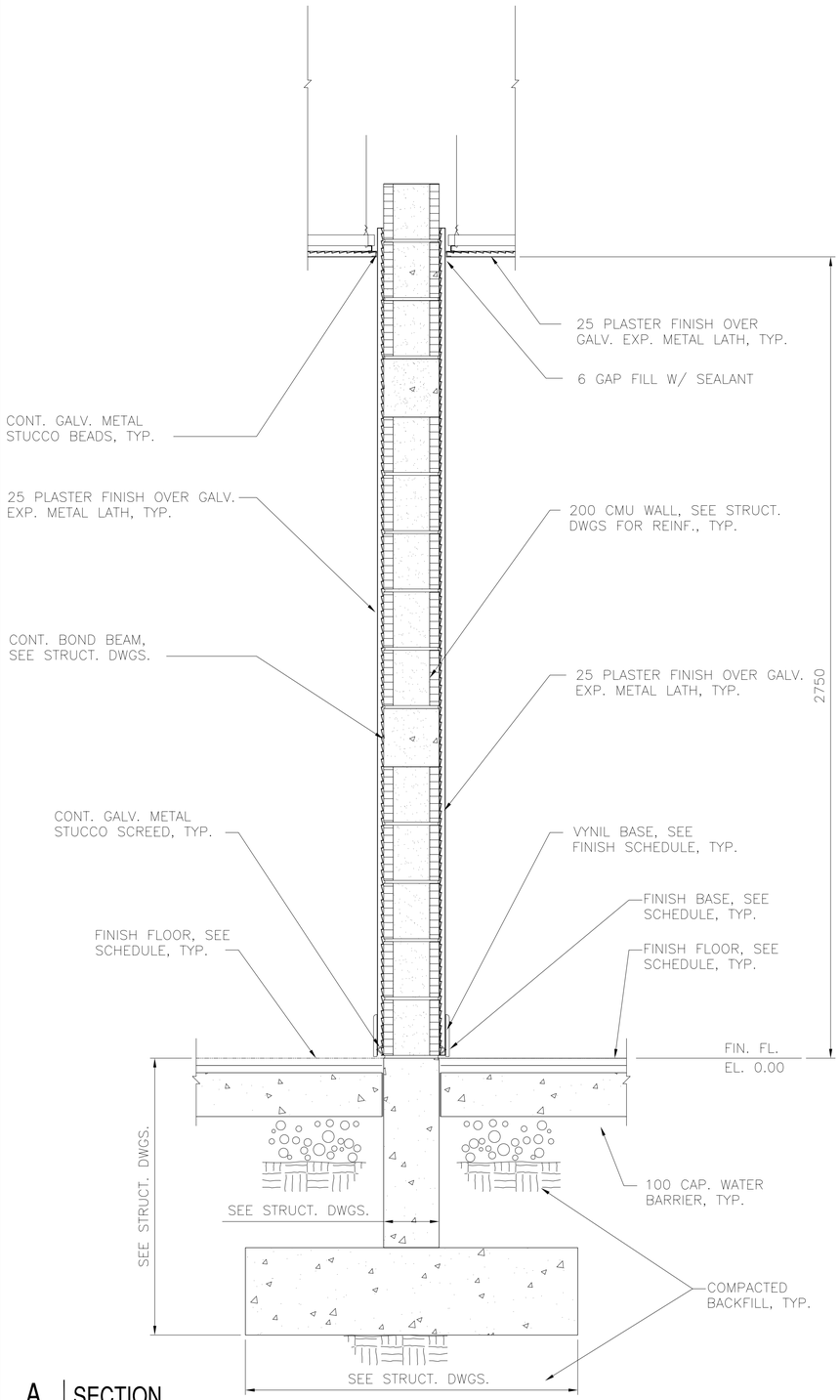

A SECTION

DC-A-01 | REF. | SCALE: 1:10

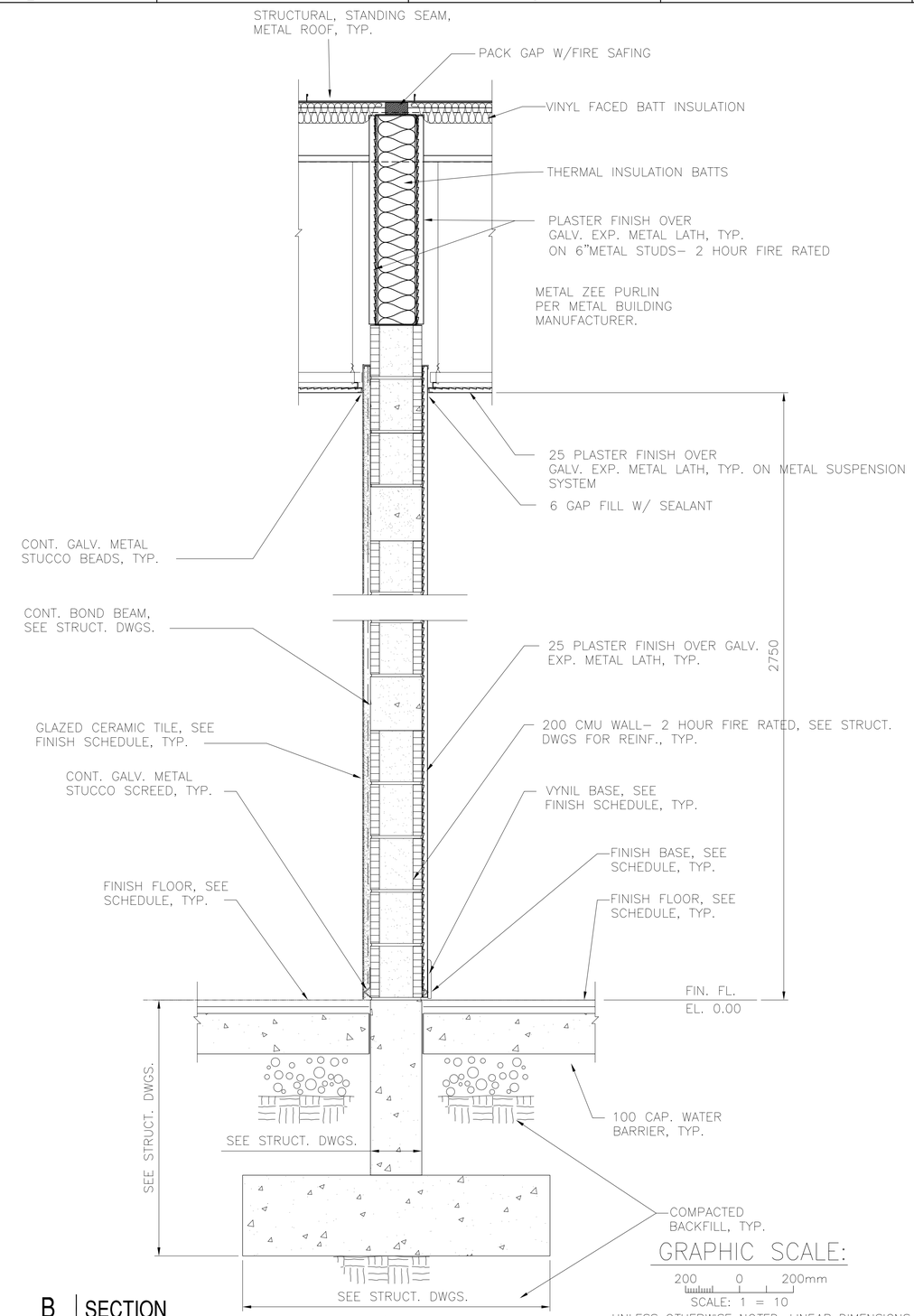

B SECTION

DC-A-01 | REF. | SCALE: 1:10

(2-HOUR RATED)

GRAPHIC SCALE:

200 0 200mm

SCALE: 1 = 10

UNLESS OTHERWISE NOTED, LINEAR DIMENSIONS SHOWN ARE IN MILLIMETERS.

SYMBOL	DESCRIPTION	DATE	APR

Designed By: R. BROWN
Date: 10 MAY 2007
Drawn By: D. GRIFFIN
File No. AF0707
Checked By: R. BROWN
I.S.O. Sheet File Name: AF0707DC-AR11SE.dwg
B. THOMAS
Solicitation Number: –

US Army Corps of Engineers
Transatlantic Programs Center

ANA REGIONAL BRIGADE
PAKTIKA, AFGHANISTAN
INTERPRETER FACILITIES
DFAC 3

INTERIOR WALL SECTIONS

SHEET REFERENCE NUMBER:
DC-A-11

$DATE$
$FILE$

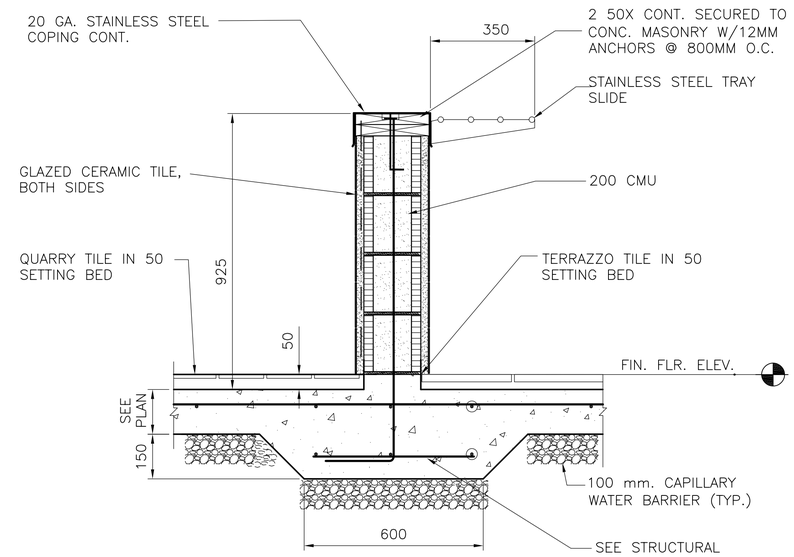

B | SECTION

DC-A-01 REF. SCALE: 1:10

GRAPHIC SCALE:

200 0 200mm

SCALE: 1 = 10

UNLESS OTHERWISE NOTED, LINEAR DIMENSIONS SHOWN ARE IN MILLIMETERS.

SYMBOL	DESCRIPTION	DATE	APR

Designed By: C.V. KLING
Drawn By: C.V.KLING
Checked By: B.R. THOMAS
T.M.WHITESIDE
Date: 10 MAY 2007
File No. AF0707
I.S.O. Sheet File Name: AF0707DC-AR10SE.dwg
Solicitation Number: –

US Army Corps of Engineers Transatlantic Programs Center

ANA REGIONAL BRIGADE
PAKTIKA, AFGHANISTAN
INTERPRETER FACILITIES
DFAC 3

WALL SECTION

SHEET REFERENCE NUMBER:
DC-A-10

$DATE$
$FILE$

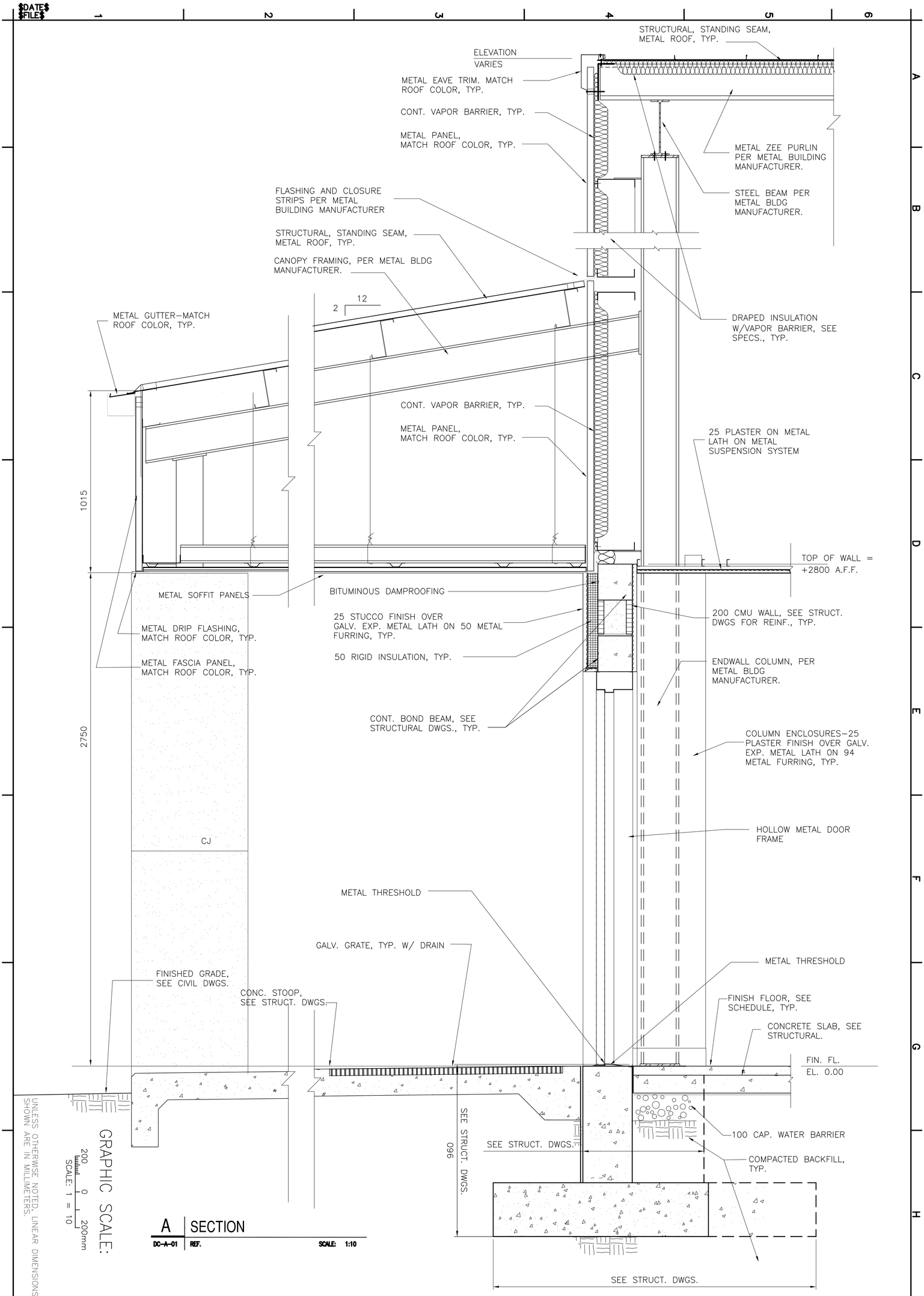

A SECTION

DC–A–01 REF. SCALE: 1:10

GRAPHIC SCALE: 200 0 200mm SCALE: 1 = 10

UNLESS OTHERWISE NOTED, LINEAR DIMENSIONS SHOWN ARE IN MILLIMETERS.

SHEET REFERENCE NUMBER: DC–A–09

ANA REGIONAL BRIGADE
PAKTIKA, AFGHANISTAN
INTERPRETER FACILITIES
DFAC 3

WALL SECTION

US Army Corps of Engineers
Transatlantic Programs Center

Designed By: C.V. KLING	Date: 10 MAY 2007
Drawn By: C.V.KLING	File No. AF0707
Checked By: B.R. THOMAS	I.S.O. Sheet File Name: AF0707DC–AR09SE.dwg
T.M.WHITESIDE	Solicitation Number: –

SYMBOL	DESCRIPTION	DATE	APR.

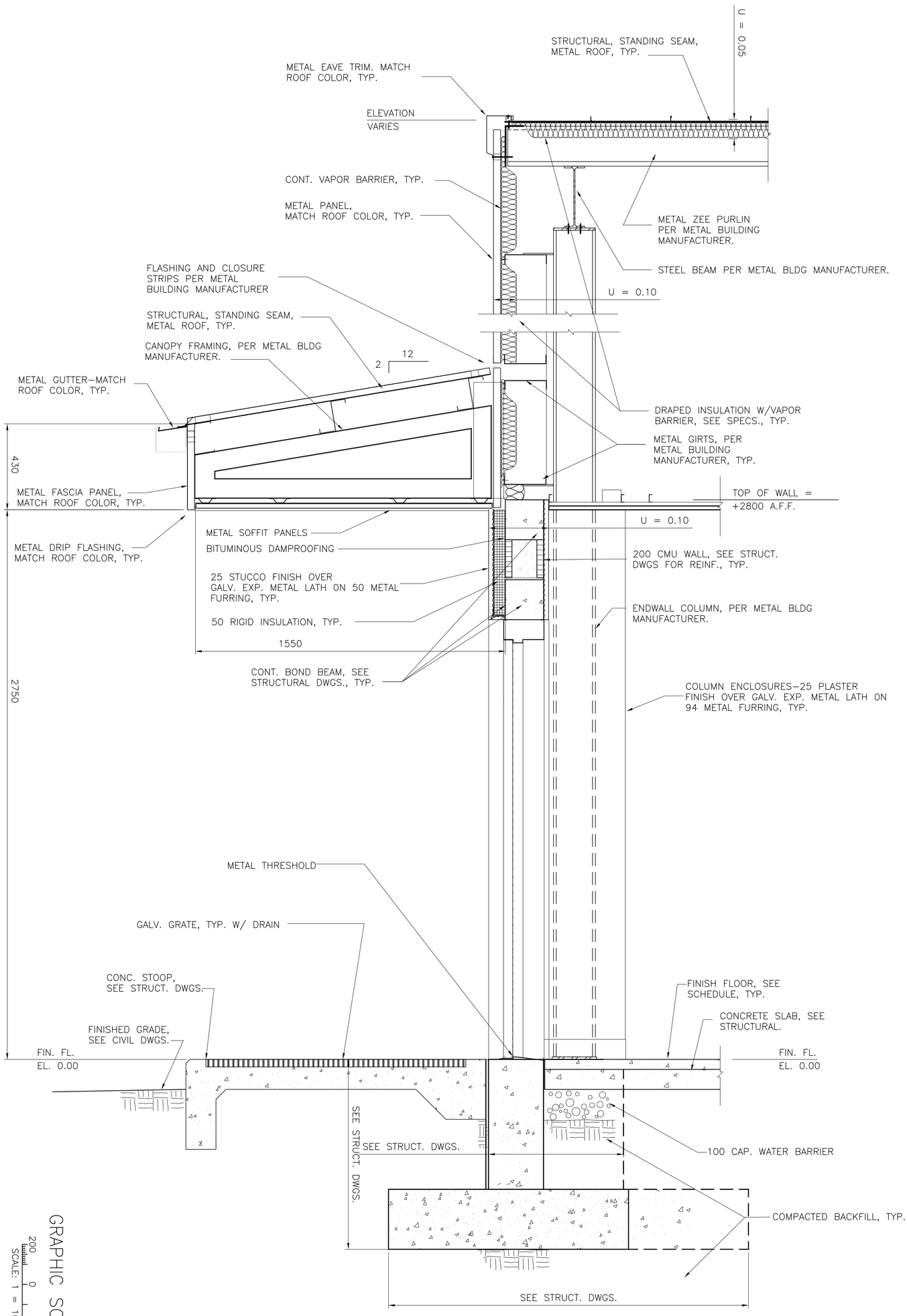

GRAPHIC SCALE:
200 0 200mm
SCALE: 1 = 10

UNLESS OTHERWISE NOTED, LINEAR DIMENSIONS SHOWN ARE IN MILLIMETERS.

A SECTION
DC–A–01 REF. SCALE: 1:10

SHEET REFERENCE NUMBER: DC–A–08

ANA REGIONAL BRIGADE
PAKTIKA, AFGHANISTAN
INTERPRETER FACILITIES
DFAC 3

WALL SECTION

US Army Corps of Engineers
Transatlantic Programs Center

Designed By: C.V. KLING	Date: 10 MAY 2007
Drawn By: C.V.KLING	File No. AF0707
Checked By: B.R. THOMAS	I.S.O. Sheet File Name: AF0707DC–AR08SE.dwg
T.M.WHITESIDE	Solicitation Number: –

SYMBOL	DESCRIPTION	DATE	APR

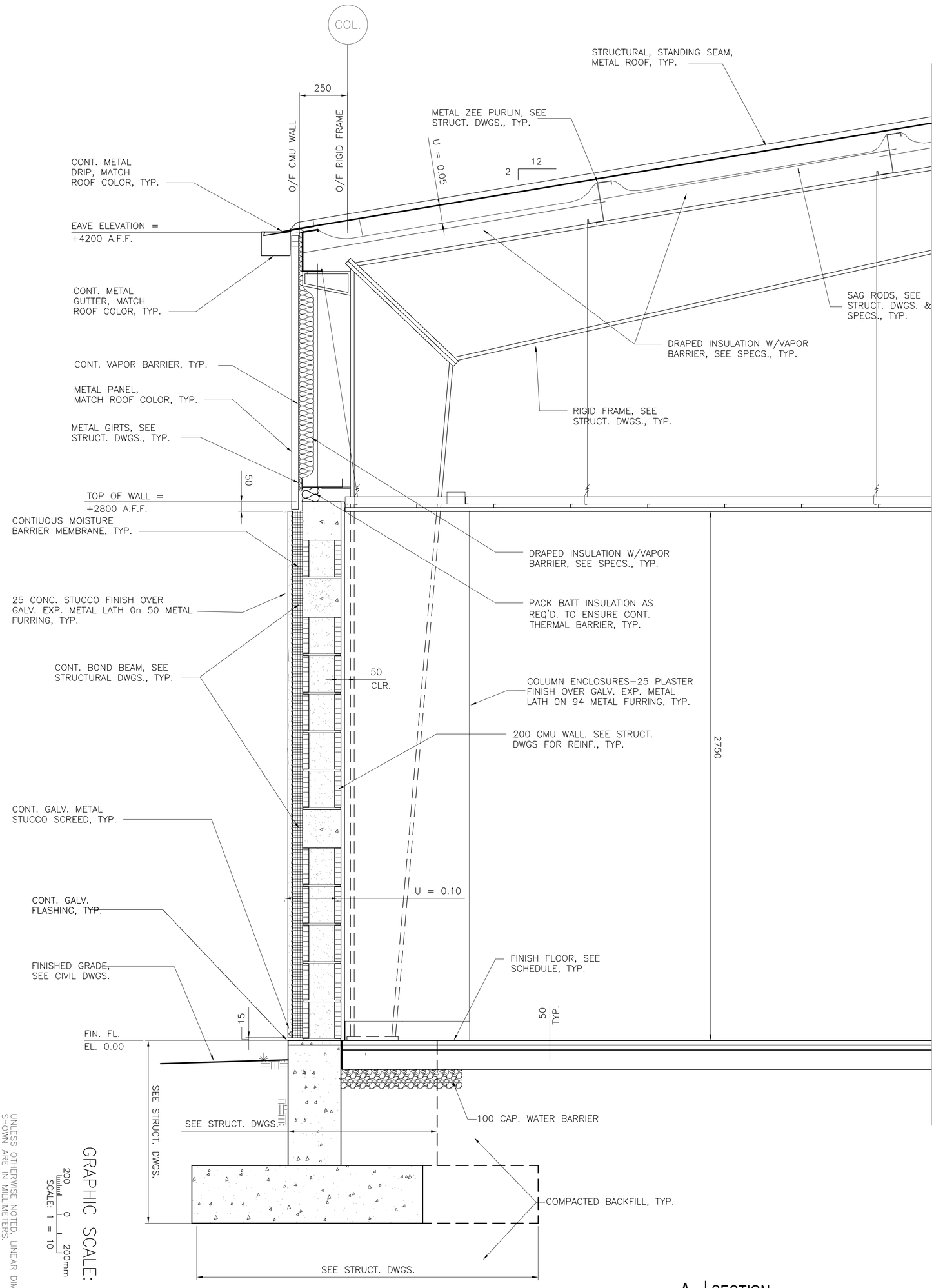

GRAPHIC SCALE: 200 0 200mm SCALE: 1 = 10

UNLESS OTHERWISE NOTED, LINEAR DIMENSIONS SHOWN ARE IN MILLIMETERS.

A SECTION

DC-A-01 REF. SCALE: 1:10

SHEET REFERENCE NUMBER: DC-A-07

ANA REGIONAL BRIGADE
PAKTIKA, AFGHANISTAN
INTERPRETER FACILITIES
DFAC 3

WALL SECTION

US Army Corps of Engineers
Transatlantic Programs Center

Designed By: C.V. KLING	Date: 10 MAY 2007
Drawn By: C.V.KLING	File No. AF0707
Checked By: B.R. THOMAS	I.S.O. Sheet File Name: AF0707DC–AR07SE.dwg
T.M.WHITESIDE	Solicitation Number: –

SYMBOL	DESCRIPTION	DATE	APR.

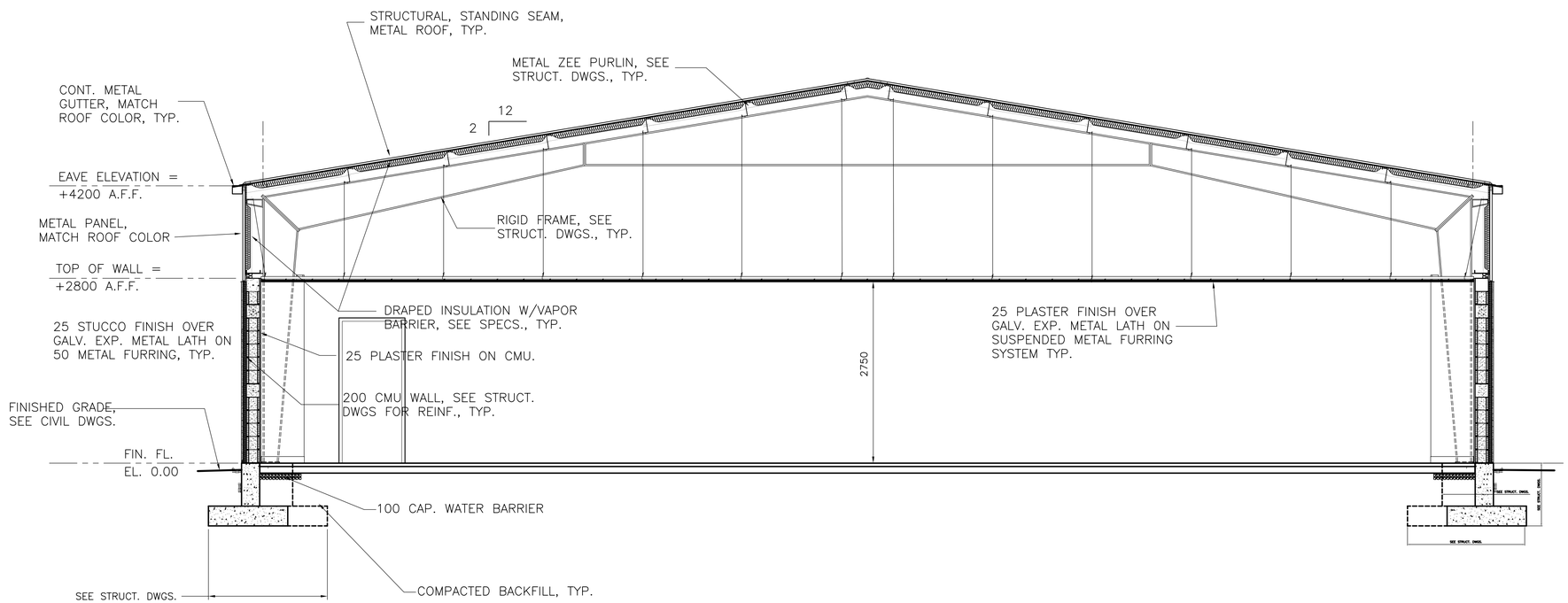

A | BUILDING SECTION

DC-A-01 | REF. | SCALE: 1:40

GRAPHIC SCALE:

800 0 800mm

SCALE: 1 = 40

UNLESS OTHERWISE NOTED, LINEAR DIMENSIONS SHOWN ARE IN MILLIMETERS.

SYMBOL	DESCRIPTION	DATE	APP.

Designed By: C.V. KLING
Date: 10 MAY 2007
Drawn By: C.V. KLING
File No. AF0707
Checked By: R. BROWN
I.S.O. Sheet File Name: AF0707DC-AR06SE.dwg
B. THOMAS
Solicitation Number: –

US Army Corps of Engineers Transatlantic Programs Center

ANA REGIONAL BRIGADE
PAKTIKA, AFGHANISTAN
INTERPRETER FACILITIES
DFAC 3

BUILDING SECTIONS

SHEET REFERENCE NUMBER:
DC-A-06

$DATE$
$FILE$

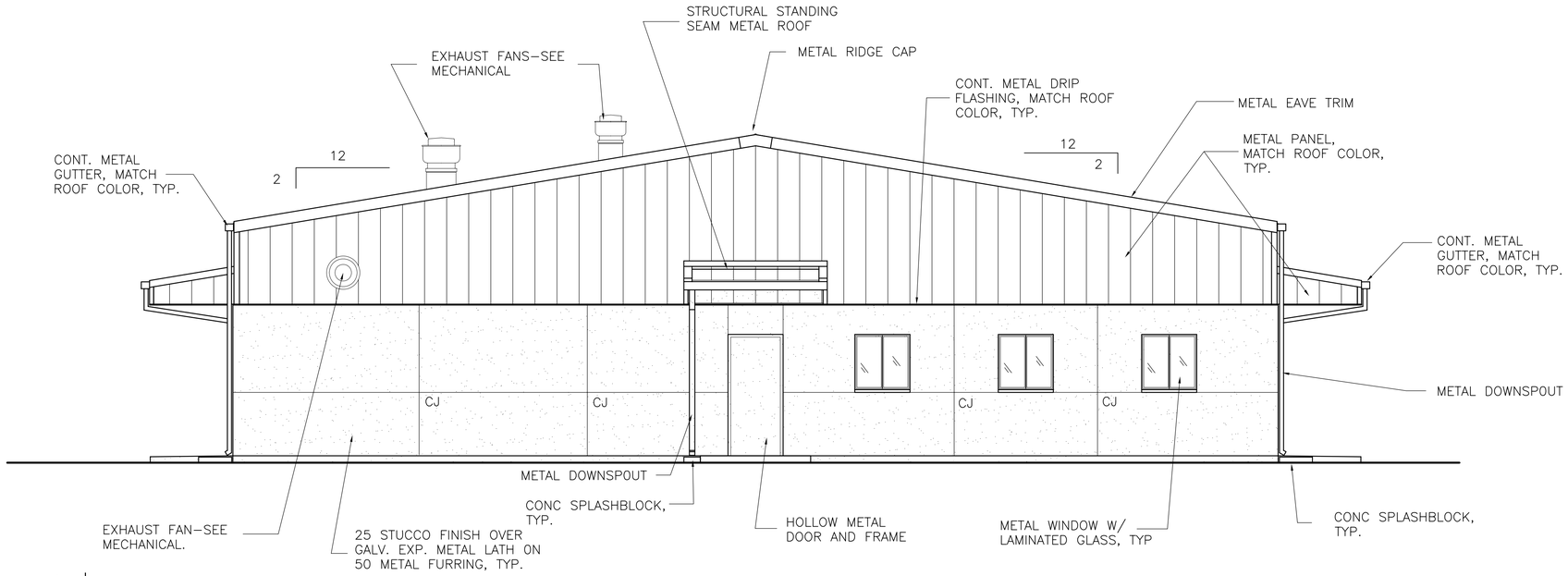

4 ELEVATION

DC–A–01 REF. SCALE: 1:50

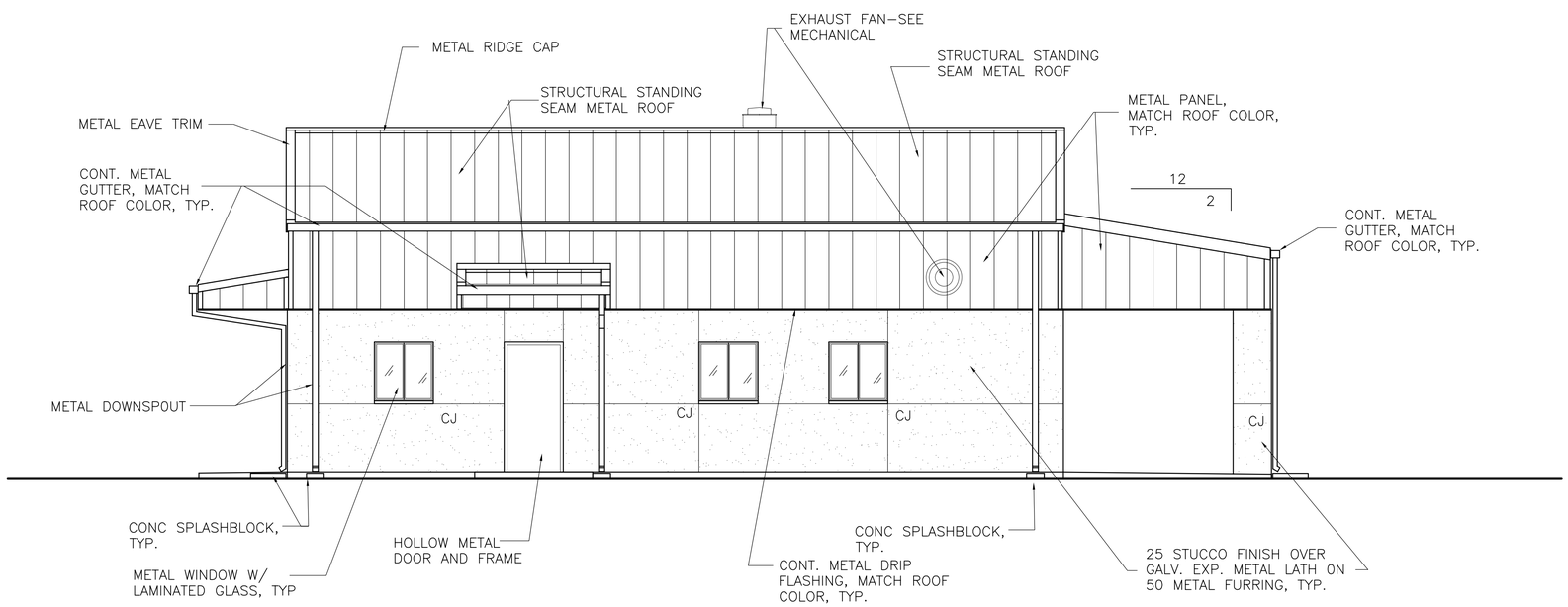

4 ELEVATION

DC–A–01 REF. SCALE: 1:50

GRAPHIC SCALE:

1000 0 1000mm

SCALE: 1 = 50

UNLESS OTHERWISE NOTED, LINEAR DIMENSIONS SHOWN ARE IN MILLIMETERS.

SYMBOL	DESCRIPTION	DATE	APR

Designed By: C.V. KLING
Date: 10 MAY 2007
Drawn By: C.V. KLING
File No. AF0707
Checked By: R. BROWN
I.S.O. Sheet File Name: AF0707DC–AR05EL.dwg
B. THOMAS
Solicitation Number: –

US Army Corps of Engineers Transatlantic Programs Center

ANA REGIONAL BRIGADE
PAKTIKA, AFGHANISTAN
INTERPRETER FACILITIES
DFAC 3

EXTERIOR ELEVATIONS

SHEET REFERENCE NUMBER:

DC–A–05

$DATE$
$FILE$

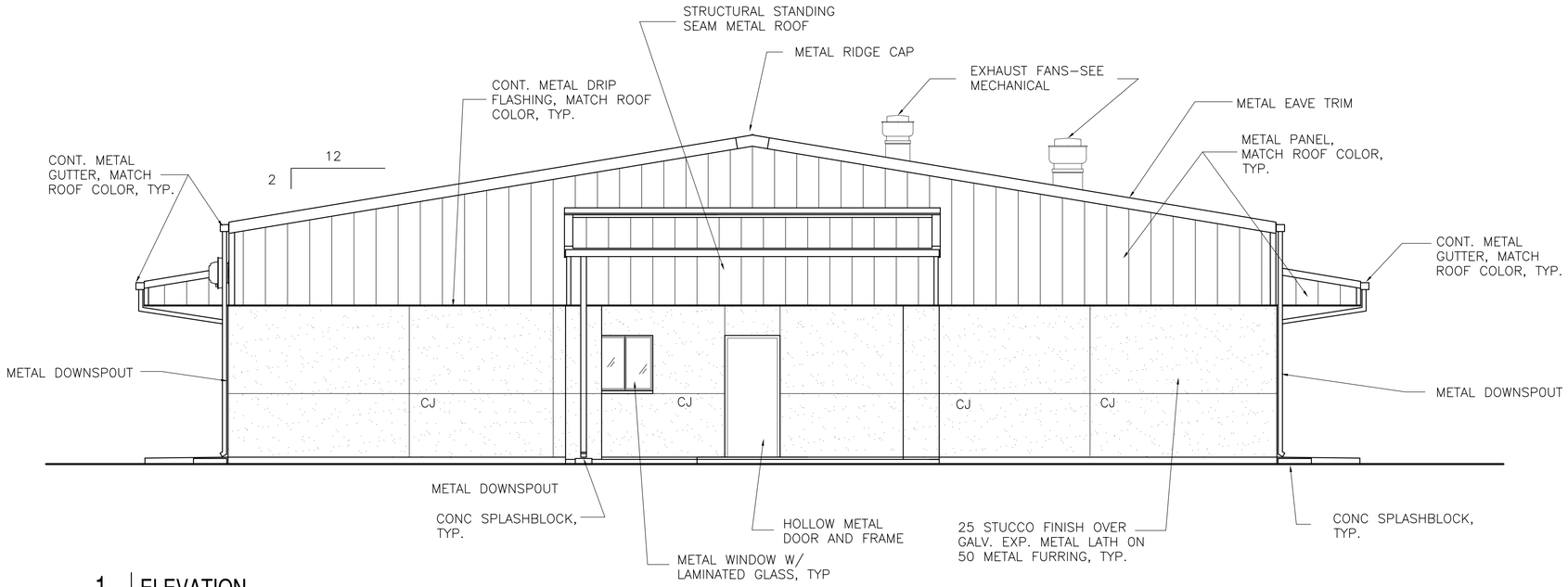

1 ELEVATION

DC–A–01 REF. SCALE: 1:50

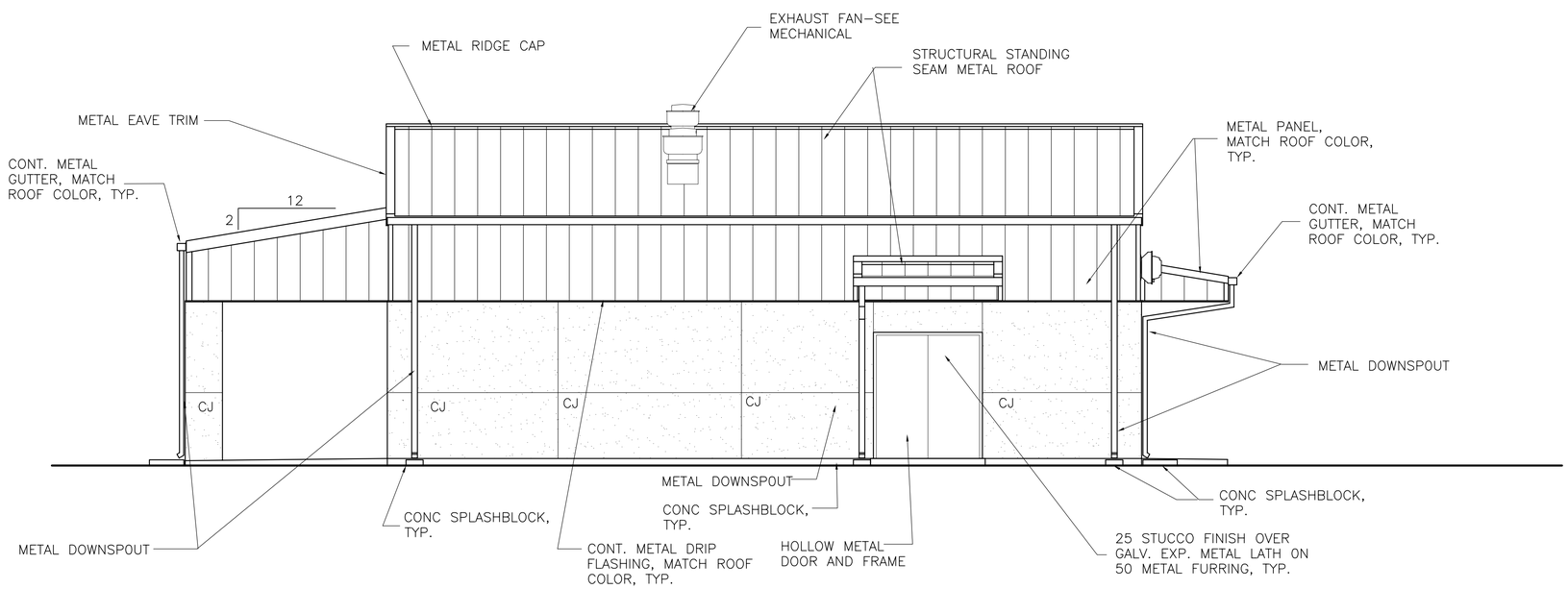

2 ELEVATION

DC–A–01 REF. SCALE: 1:50

GRAPHIC SCALE:

1000 0 1000mm

SCALE: 1 = 50

UNLESS OTHERWISE NOTED, LINEAR DIMENSIONS SHOWN ARE IN MILLIMETERS.

SYMBOL	DESCRIPTION	DATE	APR

Designed By: C.V. KLING
Date: 10 MAY 2007
Drawn By: C.V. KLING
File No. AF0707
Checked By: R. BROWN
I.S.O. Sheet File Name: AF0707DC–AR04EL.dwg
B. THOMAS
Solicitation Number: –

US Army Corps of Engineers Transatlantic Programs Center

ANA REGIONAL BRIGADE
PAKTIKA, AFGHANISTAN
INTERPRETER FACILITIES
DFAC 3

EXTERIOR ELEVATIONS

SHEET REFERENCE NUMBER:

DC–A–04

$DATE$
$FILE$

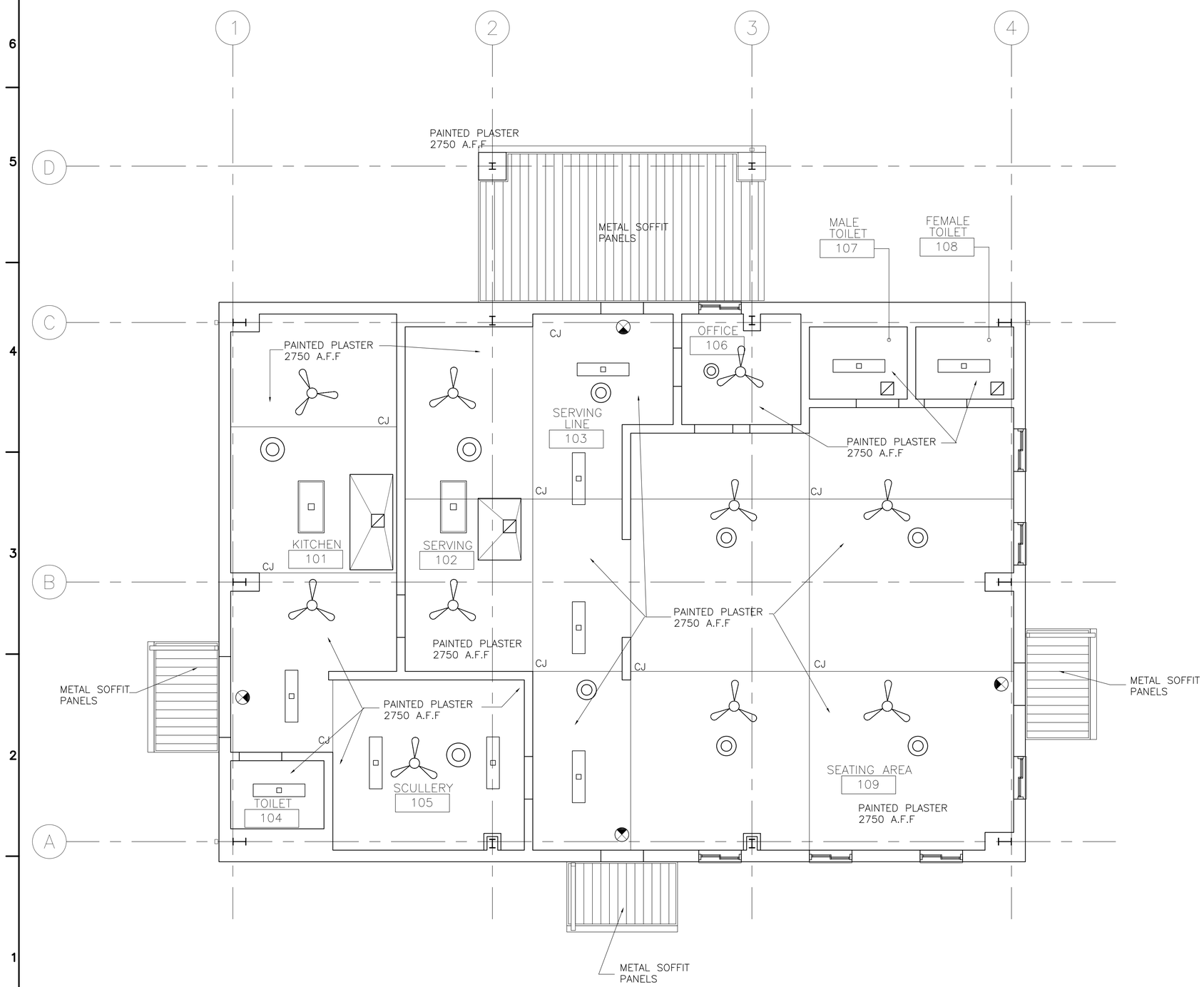

DFAC 3 – REFLECTED CEILING PLAN

SCALE: 1:50

EXHAUST AIR GRILLE

EXIT LIGHT

HVAC SUPPLY DIFFUSER

FLUORESCENT LIGHT FIXTURE

KITCHEN EXHAUST HOOD

CEILING FAN W/ LIGHT FIXTURE

STUCCO FINISH SURFACE

METAL SOFFIT PANELS

CJ PLASTER CONTROL JOINT

1000 0 1000mm

SCALE: 1 = 50

UNLESS OTHERWISE NOTED, LINEAR DIMENSIONS SHOWN ARE IN MILLIMETERS.

SYMBOL	DESCRIPTION	DATE	APP.

Designed By: C.V. KLING
Date: 10 MAY 2007
Drawn By: C.V. KLING
File No. AF0707
Checked By: R. BROWN
I.S.O. Sheet File Name: AF0707DC-AR03PN.dwg
B. THOMAS
Solicitation Number: –

US Army Corps of Engineers Transatlantic Programs Center

ANA REGIONAL BRIGADE
PAKTIKA, AFGHANISTAN
INTERPRETER FACILITIES
DFAC 3
REFLECTED CEILING PLAN

SHEET REFERENCE NUMBER:
DC–A–03

$DATE$
$FILE$

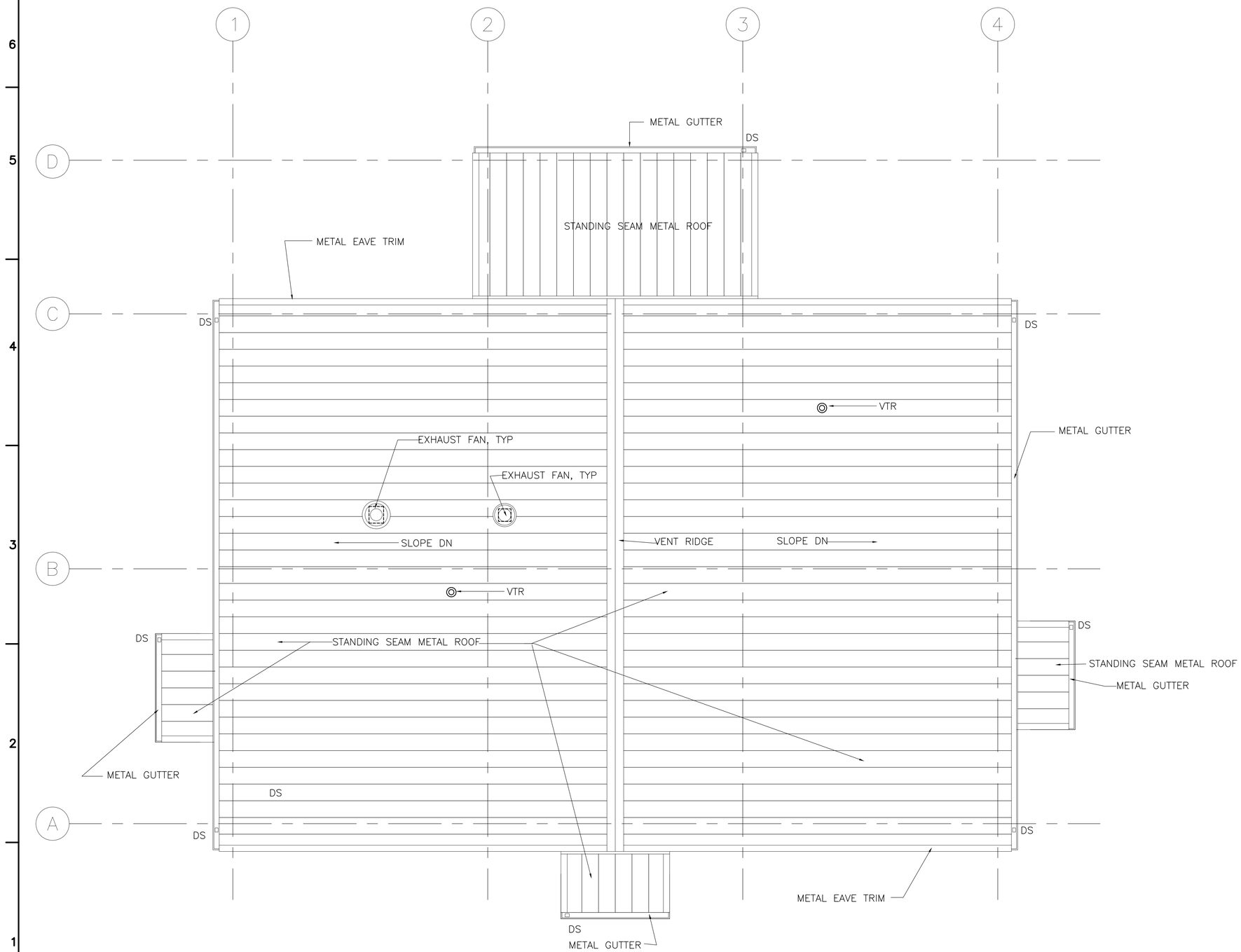

DFAC 3 – ROOF PLAN

SCALE: 1:50

1000 0 1000mm
SCALE: 1 = 50

UNLESS OTHERWISE NOTED, LINEAR DIMENSIONS SHOWN ARE IN MILLIMETERS.

SYMBOL	DESCRIPTION	DATE	APP

Designed By: C.V. KLING
Date: 10 MAY 2007
Drawn By: C.V. KLING
File No. AF0707
Checked By: R. BROWN
I.S.O. Sheet File Name: AF0707DC-AR02PN.dwg
B. THOMAS
Solicitation Number: –

US Army Corps of Engineers Transatlantic Programs Center

ANA REGIONAL BRIGADE
PAKTIKA, AFGHANISTAN
INTERPRETER FACILITIES
DFAC 3

ROOF PLAN

SHEET REFERENCE NUMBER:
DC–A–02

$DATE$
$FILE$

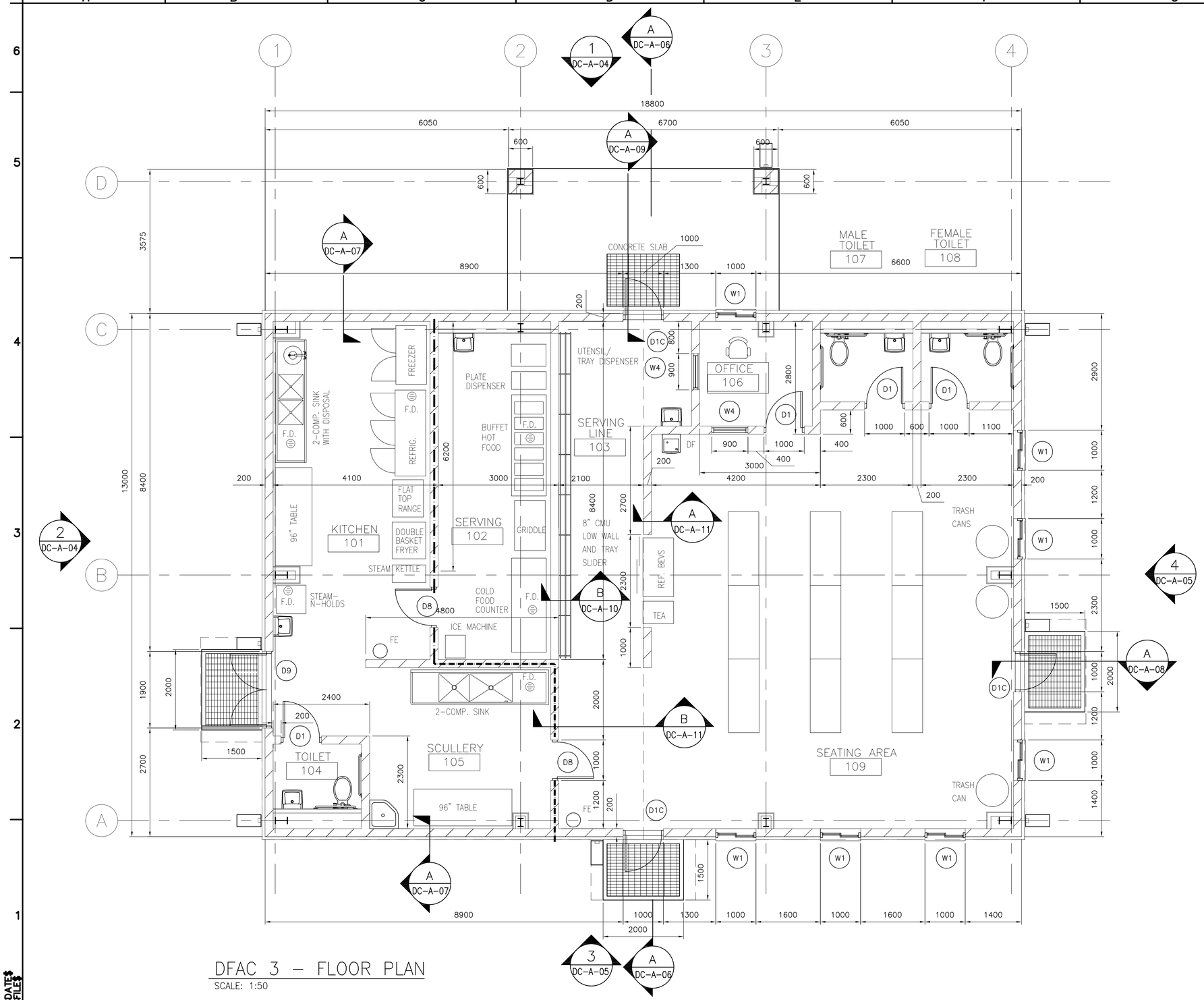

NOTES:

1- ALL WALLS ARE 200MM THK. CMU UNLESS NOTED OTHERWISE.

2- ALL WALLS TERMINATE AT CEILING UNLESS NOTED OTHERWISE. REF. STRUCT. DRWGS.

3- ALL DOOR JAMBS ARE 200MM UNLESS OTHERWISE NOTED.

4- ALL DIMENSIONS ARE TO FACE OF CMU UNLESS NOTED OTHERWISE.

5- ALL VERTICAL DIMENSIONS & LEVELS ARE FROM GROUND FLOOR FINISHED SLAB. THIS ELEVATION IS +0000.

6- SNOT USED.

7- SEE STRUCTURAL DRAWINGS FOR LOCATION OF BUILDING CONTROL, EXPANSION AND SEISMIC JOINTS.

8- ALL HVAC OPENINGS DIMENSION SHALL BE VERIFIED WITH APPROVED SUBMITTALS.

9- ALL EXPOSED PURLINS, COLUMNS, FRAMES, AND GIRTS SHALL BE PAINTED.

10- TOTAL AREA OF BUILDING IS 266.00 M2.

CMU WALL

2-HOUR FIRE WALL

DFAC 3 – FLOOR PLAN

SCALE: 1:50

GRAPHIC SCALE:

1000 0 1000mm

SCALE: 1 = 50

UNLESS OTHERWISE NOTED, LINEAR DIMENSIONS SHOWN ARE IN MILLIMETERS.

SYMBOL	DESCRIPTION	DATE	APR

Designed By: C.V. KLING
Drawn By: C.V. KLING
Checked By: R. BROWN
B. THOMAS

Date: 10 MAY 2007
File No. AF0707
I.S.O. Sheet File Name: AF0707DC-AR01PN.dwg
Solicitation Number: –

US Army Corps of Engineers Transatlantic Programs Center

ANA REGIONAL BRIGADE
PAKTIKA, AFGHANISTAN
INTERPRETER FACILITIES
DFAC 3

FLOOR PLAN

SHEET REFERENCE NUMBER:

DC–A–01

$DATE$
$FILE$

ARCHITECTURAL ABBREVIATIONS

A	
ABOVE FINISH FLOOR	AFF
ACCESS PANEL	AP
ACOUSTIC	ACOUS (ACST)
ACTIVE LEAF	A/L
AGGREGATE	AGG
AIR CONDITIONING	A/C
ALUMINUM	ALUM (AL)
ANCHOR BOLT	AB
AND	&
ANGLE	∠ (ANG)
ARCHITECTURAL	ARCH
AREA INLET	AI.
ASPHALT	ASPH
AT	@
AUTOMATIC	AUTO
B	
BACK OF WALL	BOW
BATTEN INSULATION	BATT INSUL
BEAM	BM
BEARING	BRG
BITUMINOUS	BIT (BITUM)
BLOCK	BLK
BLOCKING	BLKG
BOARD	BD
BOTTOM	BOT (BOTT)
BRACING	BRCG
BRACKET	BRKT
BUILDING	BLDG
C	
CABINET	CAB
CAST IRON	CI
CATCH BASIN	CB
CEILING	CLG
CEMENT	CEM
CENTER	CTR
CENTER LINE	℄ OR CL
CENTER TO CENTER	CC
CERAMIC TILE	CT
CIRCULAR	CIR
CLEANOUT	CO
CLEAR	CLR
CLOSET	CLO
COLUMN	COL
CONCRETE	CONC
CONCRETE MASONRY UNITS	CMU
CONNECTION	CONN
CONSTRUCTION	CONSTR
CONSTRUCTION JOINT	CONSTR JT
CONTINUOUS	CONT.
CONTROL JOINT	CJ
CORNER	COR
CORRIDOR	CORR
COUNTER	CNTR
COUNTER SUNK	CSK
D	
DAMPPROOFING	DP
DETAIL	DET (DETL)
DIAGONAL	DIAG
DIAMETER	DIA
DIMENSION	DIM
DISPENSER	DISP
DOOR	DR
DOUBLE	DBL
DOWN	DN
DRAWER	DWR
DRAWING	DWG
DRINKING FOUNTAIN	DF
E	
EACH	EA
ELECTRICAL OR ELECTRIC	ELEC
ELEVATION	EL.
EMERGENCY	EMERG
ENCLOSURE	ENCL
ENTRANCE	ENTR
EQUIPMENT	EQUIP (EQPT)
EQUAL	EQ
EXHAUST	EXH
EXISTING	EXIST.
EXPANSION	EXPN
EXPANSION JOINT	EJ (EXP JT)
EXTERIOR	EXT
F	
FACE OF CONCRETE	FOC
FACE OF FINISH	FOF
FACE OF MASONRY	FOM
FACE OF WALL	FOW
FINISH	FIN.
FIRE HYDRANT	FH
FIXTURE	FIX
FLASHING	FLASH
FLOOR	FLR OR FL
FLOOR DRAIN	FD
FLOORING	FLG
FOOTING	FTG
FOUNDATION	FDN
FRAME	FR
FINISH FLOOR LINE	FFL
G	
GAGE OR GAUGE	GA
GALVANIZED	GALV
GALVANIZED IRON	GI
GAS	G
GRID LINE	GL
GLAZED WALL TILE	GWT
GRADE	GR
GROUND	GND
GROUND CLEANOUT	GCO
GYPSUM	GYP
GYPSUM WALLBOARD	GYP BD (GWB)
H	
HANDRAIL	HDR
HARDBOARD	HBD
HARDWARE	HDW (HW)
HEAD	HD
HEATER	HTR
HEIGHT	HT (HGT)
HIGH POINT	H.PT.
HOLLOW METAL	HM
HORIZONTAL	HORIZ
HOSE BIBB	HB
I	
INSIDE DIAMETER	I.D.
INSULATION	INSUL.
INTERIOR	INT (INTR)
J	
JANITOR	JAN
JOINT	JT
JOIST	JST
K	
KEY LOCK	KL
KICK PLATE	KP
L	
LABORATORY	LAB
LAMINATE	LAM
LAVATORY	LAV
LIGHT	LT
LIGHTING	LTG
LOW POINT	LP
LUMBER	LBR
LOUVER	LVR
M	
MACHINE	MACH
MAINTENANCE	MAINT
MASONRY OPENING	MO
MASONRY UNIT	MU
MASTIC	MSTC
MATERIAL	MATL
MAXIMUM	MAX
MECHANICAL	MECH
METAL	MET
METAL BUILDING MANUFACTURER	MBM
MINIMUM	MIN
MIRROR	MIR
MISCELLANEOUS	MISC
MONOLITHIC	MONO
N	
NORTH	N
NOT IN CONTRACT	NIC
NUMBER	NO. (#)
NOT TO SCALE	NTS
O	
OFFICE	OFF.
ON CENTER	OC
OPENING	OPNG
OPPOSITE	OPP
OUTSIDE DIAMETER	O.D.
P	
PANEL	PNL
PAPER TOWEL DISPENSER	PTD
PAPER TOWEL DISPENSER & RECEPTACLE	PTD/R
PAPER TOWEL RECEPTACLE	PTR
PARTITION	PRTN
PLASTER	PLAST
PLATE	PL OR P
PLUMBING	PLBG
PLYWOOD	PLY WD
PRECAST	PRCST
Q	
QUARRY TILE	Q.T.
QUARTERS	QTRS
R	
RADIUS	RAD
RECEPTACLE	RECP
REFERENCE	REF
REFRIGERATOR	REFR
REINFORCEMENT	REINF
REQUIRED	REQD
REVISIONS	REV
RISER	R
ROOFING	RFG
ROOM	RM
ROUGH	RGH
S	
SANITARY NAPKIN DISPENSER	SND
SANITARY NAPKIN RECEPTACLE	SNR
SCHEDULE	SCH
SEAT COVER DISPENSER	SCD
SERVICE SINK	SSK
SHEATHING	SHTHG
SHEET	SHT.
SHEET METAL	SHT. MET.
SHOWER	SHR
SIMILAR	SIM
SOAP DISPENSER	SD
SOLID CORE	SC
SOUTH	S
SPEAKER	SPKR
SPECIFICATION	SPEC
SPLASH BLOCK	SB
SQUARE	SQ OR ⧈
STANDARD	STD
STEEL	STL
STORAGE	STOR
STRUCTURAL	STRL
SUSPENDED	SUSP
SYMMETRICAL	SYM
T	
TELEPHONE	TEL
TEMPERATURE	TEMP
TEMPERED GLASS	T
TERRAZZO	TER
THICK	THK
TOILET PAPER DISPENSER	TPD
TOP OF CONCRETE	TOC
TOP OF CURB	TC
TOP OF PAVEMENT	TP
TOP OF STEEL	TOS
TOP OF WALL	TW
TOPOGRAPHY	TOPO
TYPICAL	TYP
U	
UNLESS OTHERWISE NOTED	UON
URINAL	UR
V	
VENTILATOR	VENT
VENT THRU ROOF	VTR
VERTICAL	VERT
VESTIBULE	VEST
W	
WATER CLOSET	WC
WEIGHT	WT
WELDED WIRE FABRIC	WWF
WINDOW	W/
WITH	W/
WITHOUT	W/O
WOOD	WD

SYMBOLS

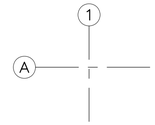

GRID LINES

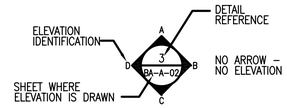

INTERIOR ELEVATION

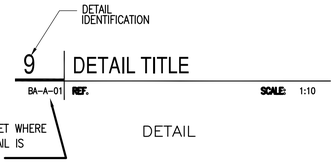

DETAIL

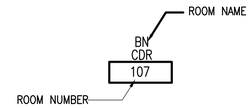

ROOM IDENTIFICATION

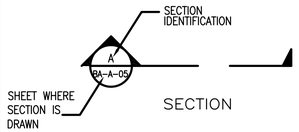

SECTION

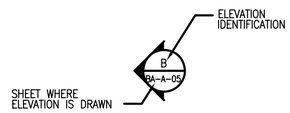

EXTERIOR ELEVATION

D3

DOOR NUMBER

WA

WINDOW NUMBER

L1

LOUVER NUMBER

MATERIAL LEGEND

- CONCRETE
- CONCRETE MASONRY UNIT (CMU)
- SAND, MORTAR
- METAL STUD WALL
- WOOD – FRAMING
- WOOD BLOCKING
- METAL
- INSULATION, BATT
- GYPSUM BOARD
- WOOD – FINISH

UNLESS OTHERWISE NOTED, LINEAR DIMENSIONS SHOWN ARE IN MILLIMETERS.

SYMBOL	DESCRIPTION	DATE	APR

Designed By: R. BROWN
Date: 10 MAY 2007
Drawn By: D. GRIFFIN
File No. AF0707
Checked By: R. BROWN
I.S.O. Sheet File Name: AF0707DC-AROOGN.dwg
B. THOMAS
Solicitation Number: –

US Army Corps of Engineers
Transatlantic Programs Center

ANA REGIONAL BRIGADE
PAKTIKA, AFGHANISTAN
INTERPRETER FACILITIES
DFAC 3
ABBREVIATIONS & SYMBOLS
I

SHEET REFERENCE NUMBER:
DC–A–00

$DATE$
$FILE$

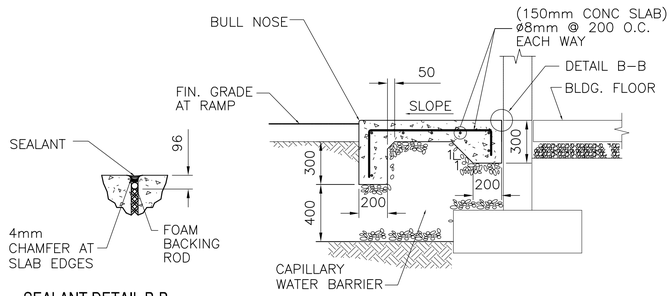

SEALANT DETAIL B-B

SECTION A-A

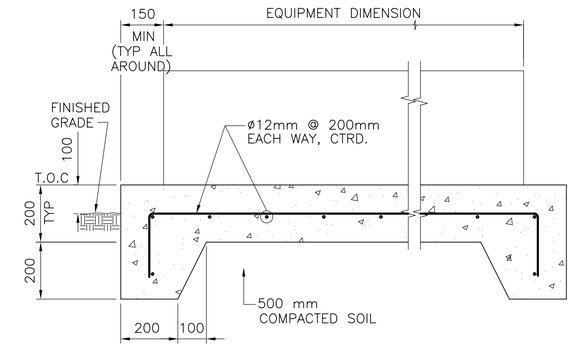

TYPICAL ALL AROUND PERIMETER

NOTE:
PAD DIMENSIONS, ANCHOR BOLT SIZE AND LOCATIONS, AND OTHER EMBEDDED ITEMS SHALL CONFORM TO EQUIPMENT MANUFACTURER'S REQUIREMENTS.

2 CONCRETE PAD FOR EXTERIOR EQUIPMENT

DC-SS-04 REF. SCALE: 1:10

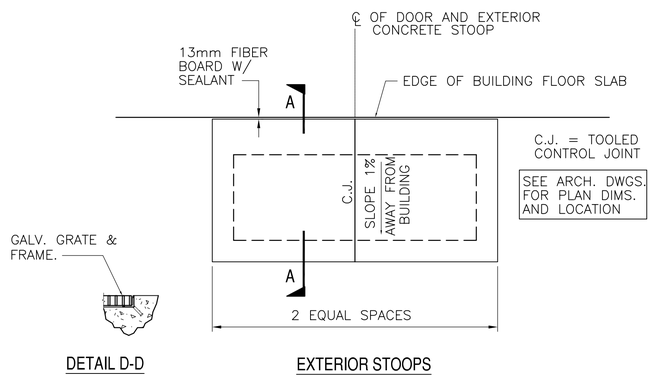

DETAIL D-D

EXTERIOR STOOPS

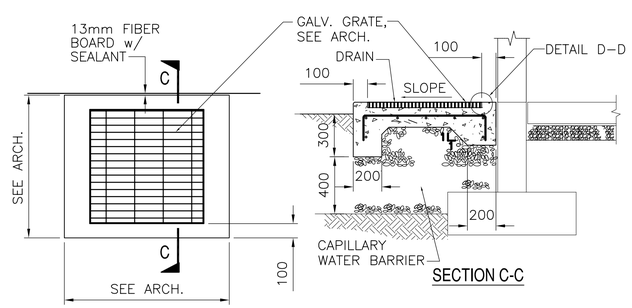

SECTION C-C

EXTERIOR STOOPS w/ GALVANIZED GRATE

1 CONCRETE STOOP/RAMP DETAILS

DC-SS-04 REF. SCALE: 1:20

200 0 200mm
SCALE: 1 = 10

UNLESS OTHERWISE NOTED, LINEAR DIMENSIONS SHOWN ARE IN MILLIMETERS.

SYMBOL	DESCRIPTION	DATE	APP.

Designed By: D. SMITH
Date: 10 MAY 2007
Drawn By: D. SMITH
File No: AF0707
Checked By: M. THOMPSON
I.S.D. Sheet File Name: AF0707DC-SS04DT.DWG
Solicitation Number: –

US Army Corps of Engineers
Transatlantic Programs Center

ANA REGIONAL BRIGADE
PAKTIKA, AFGHANISTAN
INTERPRETER FACILITIES
DFAC 3

MISCELLANEOUS EXTERIOR CONCRETE PAD DETIALS

SHEET REFERENCE NUMBER:
DC-SS-04

$DATE$
$FILE$

D SIZE BORDER
32 X 20.5

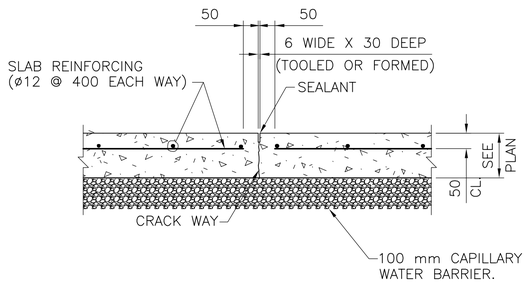

1 SLAB ON GRADE OR PAVEMENT CONTROL JOINT

E-SS-03 REF. SCALE: 1:10

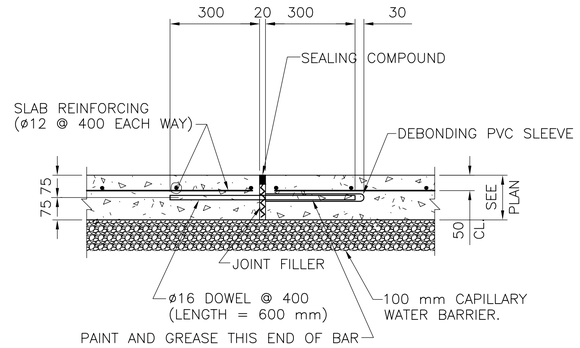

2 PAVEMENT EXPANSION JOINT

E-SS-03 REF. SCALE: 1:10

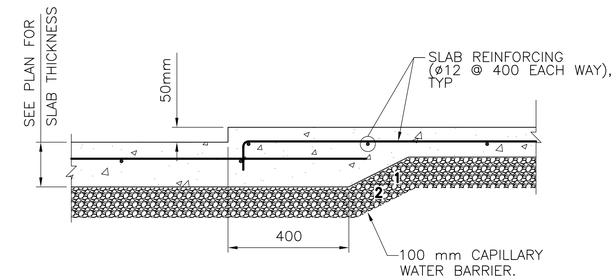

3 DEPRESSED SLAB DETAIL

E-SS-03 REF. SCALE: 1:10

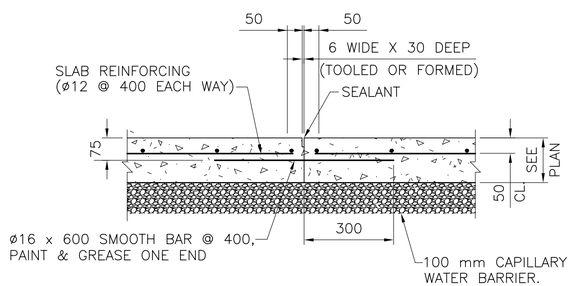

4 SLAB ON GRADE OR PAVEMENT CONSTRUCTION JOINT

E-SS-03 REF. SCALE: 1:10

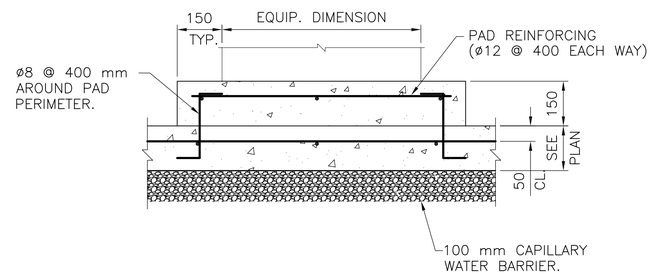

5 INTERIOR EQUIPMENT PAD DETAIL

E-SS-03 REF. SCALE: 1:10

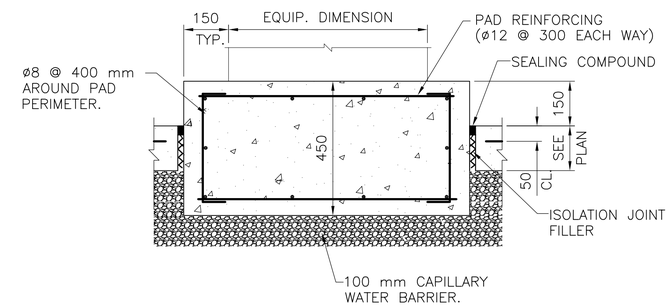

6 LARGE EQUIPMENT ISOLATION PAD DETAIL

E-SS-03 REF. SCALE: 1:10

200 0 200mm
SCALE: 1 = 10

UNLESS OTHERWISE NOTED, LINEAR DIMENSIONS SHOWN ARE IN MILLIMETERS.

SYMBOL	DESCRIPTION	DATE	APP.

Designed By: D. SMITH
Drawn By: D. SMITH
Checked By: M. THOMPSON
Date: 10 MAY 2007
File No. AF0707
I.S.O. Sheet File Name: AF0707E-SS03DT.DWG
Solicitation Number: –

US Army Corps of Engineers Transatlantic Programs Center

ANA REGIONAL BRIGADE
PAKTIKA, AFGHANISTAN
FIRE STATION

TYPICAL SLAB ON GRADE DETAILS

SHEET REFERENCE NUMBER:
E-SS-03

$DATE$
$FILE$

D SIZE BORDER
32 X 20.5

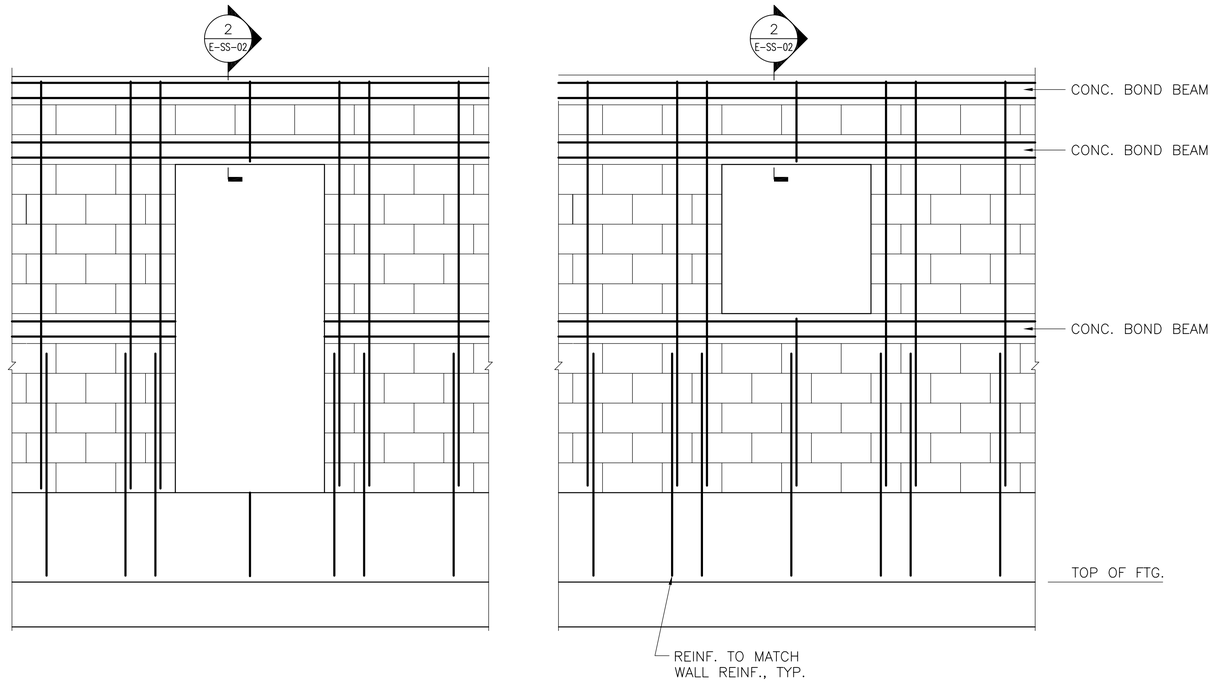

1 | CMU WALL PARTIAL ELEVATION

E-SS-02 | REF. | SCALE: 1:20

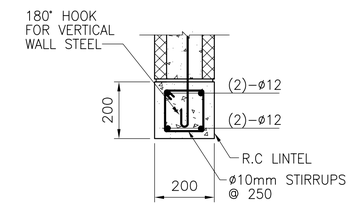

2 | LINTEL SECTION

E-SS-02 | REF. | SCALE: 1:10

200 0 200mm
SCALE: 1 = 10

UNLESS OTHERWISE NOTED, LINEAR DIMENSIONS SHOWN ARE IN MILLIMETERS.

SYMBOL	DESCRIPTION	DATE	APP.

Designed By: D. SMITH
Drawn By: D. SMITH
Checked By: M. THOMPSON
Date: 10 MAY 2007
File No. AF0707
I.S.O. Sheet File Name: AF0707E-SS02DT.DWG
Solicitation Number: –

US Army Corps of Engineers
Transatlantic Programs Center

ANA REGIONAL BRIGADE
PAKTIKA, AFGHANISTAN
FIRE STATION

TYPICAL MASONRY DETAILS

SHEET REFERENCE NUMBER:
E-SS-02

$DATE$
$FILE$

D SIZE BORDER
32 X 20.5

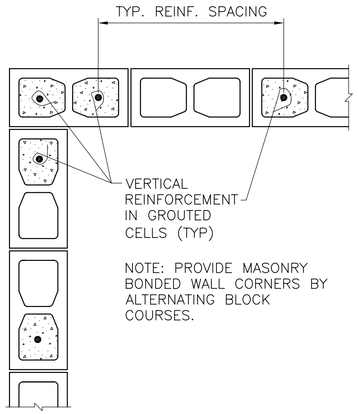

1 TYPICAL CMU CORNER WALL REINFORCING DETAIL

E-SS-01 REF. SCALE: 1:10

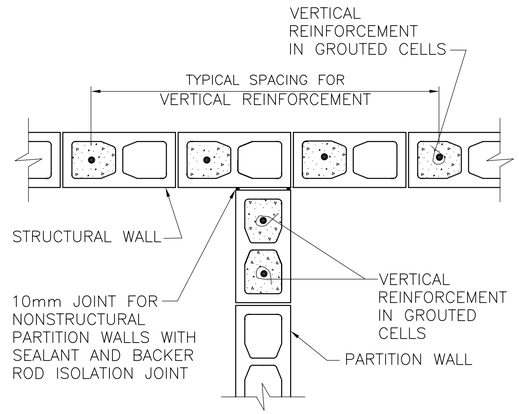

2 TYPICAL CMU PARTITION WALL REINFORCING DETAIL

E-SS-01 REF. SCALE: 1:10

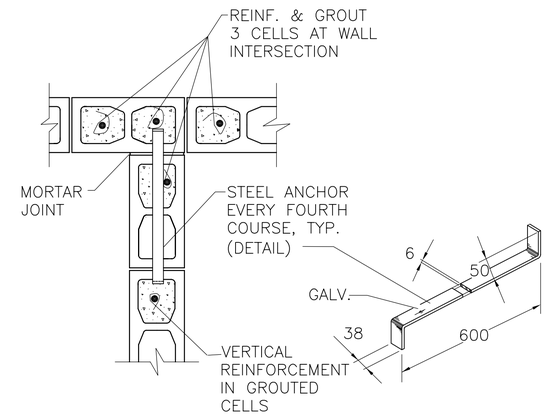

3 TYPICAL CMU STRUCTURAL WALL REINFORCING DETAIL

E-SS-01 REF. SCALE: 1:10

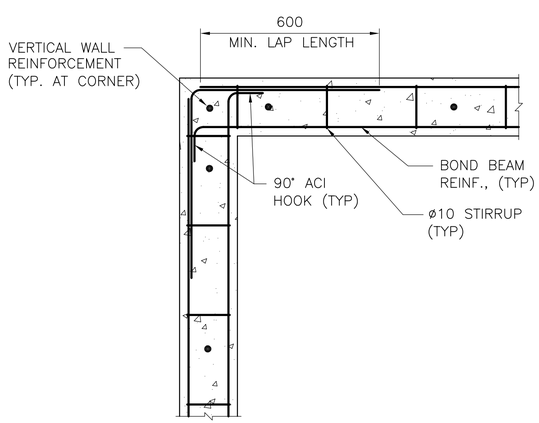

4 TYPICAL CIP CONCRETE BOND BEAM REINFORCING DETAIL

E-SS-01 REF. SCALE: 1:10

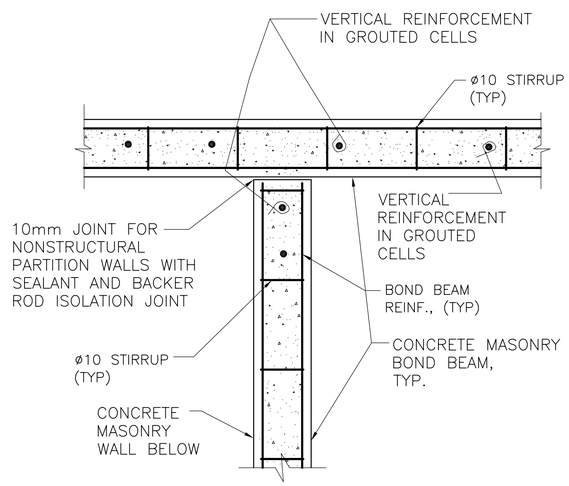

5 TYPICAL CIP CONCRETE BOND BEAM REINFORCING DETAIL

E-SS-01 REF. SCALE: 1:10

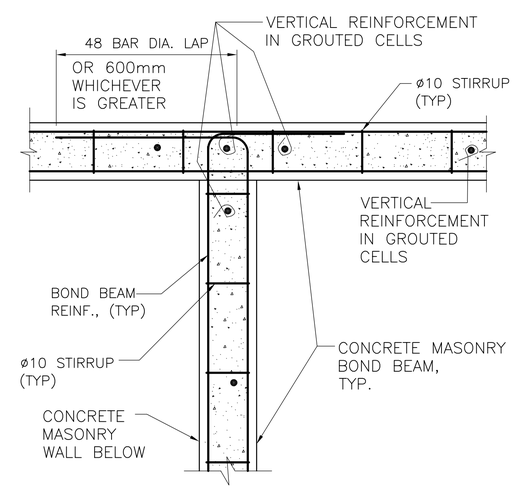

6 TYPICAL CIP CONCRETE BOND BEAM REINFORCING DETAIL

E-SS-01 REF. SCALE: 1:10

200 0 200mm
SCALE: 1 = 10

UNLESS OTHERWISE NOTED, LINEAR DIMENSIONS SHOWN ARE IN MILLIMETERS.

SYMBOL	DESCRIPTION	DATE	APP.

Designed By: D. SMITH
Drawn By: D. SMITH
Checked By: M. THOMPSON
Date: 10 MAY 2007
File No. AF0707
I.S.O. Sheet File Name: AF0707E-SS01DT.DWG
Solicitation Number: –

US Army Corps of Engineers Transatlantic Programs Center

ANA REGIONAL BRIGADE
PAKTIKA, AFGHANISTAN
FIRE STATION

TYPICAL MASONRY DETAILS

SHEET REFERENCE NUMBER:
E-SS-01

$DATE$
$FILE$

D SIZE BORDER
32 X 20.5

GENERAL:

1. CONTRACTOR SHALL VERIFY ALL DIMENSIONS AND CONDITIONS AFFECTING THE WORK AT JOBSITE.

2. ALL STRUCTURAL WORK AND MATERIALS SHALL CONFORM TO THE REQUIREMENTS OF THE PROJECT SPECIFICATIONS.

3. FOR LOCATION AND DIMENSIONS OF GROOVES, REGLETS, SLEEVES, OPENINGS, AND EMBEDDED OR ATTACHED ITEMS, REFER TO ARCHITECTURAL, MECHANICAL, ELECTRICAL, AND PIPING DRAWINGS.

CODES:

1. ALL PARTS SHALL BE FURNISHED AND ERECTED ACCORDING TO THE APPLICABLE CODES AND SPECIFICATIONS OF THE FOLLOWING:

AMERICAN CONCRETE INSTITUTE	(ACI)
AMERICAN INSTITUTE OF STEEL CONSTRUCTION	(AISC)
AMERICAN IRON AND STEEL INSTITUTE	(AISI)
AMERICAN WELDING SOCIETY	(AWS)
MINIMUM DESIGN LOADS FOR BUILDINGS AND OTHER STRUCTURES	(ASCE)
INTERNATIONAL BUILDING CODE	(IBC)

DESIGN LOADS:

1. ROOF LOADING

A. LIVE LOAD 100 KG/SQ METER (20 PSF)
B. SNOW LOAD 75 KG/SQ METER (15 PSF)
C. COLLATERAL LOAD 50 KG/SQ METER (10 PSF)

2. WIND LOADING

A. BASIC WIND SPEED 145 KM/HR (90 MPH)
B. EXPOSURE CATEGORY "B"
C. IMPORTANCE FACTOR, Iw = 1.15
D. BUILDING CATEGORY "IV"
E. MAX. FRAME DRIFT DUE TO WIND = H/200

3. SEISMIC LOADING

A. Ss = 1.28g
B. S1 = 0.51g
C. SEISMIC USE GROUP "III"
D. SITE CLASSIFICATION "D"
E. IMPORTANCE FACTOR I = 1.5

BASIC SEISMIC FORCE RESISTING SYSTEM:

CANTILEVER CMU WALL SYSTEM WITH INTERMEDIATE STEEL MOMENT FRAMES

DESIGN BASE SHEAR: 0.34W FOR CMU CANTILEVER WALLS.
0.19W FOR INTERMEDIATE STEEL MOMENT FRAMES.

ANALYSIS PROCEDURE: EQUIVALENT LATERAL FORCE METHOD

FOUNDATIONS:

1. ALL FOOTINGS SHALL BEAR ON SOIL CAPABLE OF SUSTAINING THE LOADS.

2. CONTINUOUS WALL FOOTINGS WERE DESIGNED FOR A SOIL BEARING CAPACITY OF 9765 KG/SQ. METER (2000 PSF). ISOLATED COLUMN FOOTINGS WERE DESIGNED FOR A MAXIMUM BEARING CAPACITY OF 9765 KG/SQ. METER (2000 PSF).

3. ELEVATIONS SHOWN ON PLANS FOR TOP OF FOOTINGS ARE MINIMUM DEPTH. DIFFERENT OR UNUSUAL CONDITIONS SHALL BE REPORTED TO THE CONTRACTING OFFICER.

4. ALL FOOTING REINFORCEMENT SHALL BE SECURELY SUPPORTED ABOVE GROUND. CONCRETE BLOCK AND BROKEN TILE SHALL NOT BE USED. CONCRETE OR CLAY BRICK MAY BE USED.

CONCRETE:

1. STRUCTURAL CONCRETE FOR THE BUILDING STRUCTURE SHALL HAVE THE FOLLOWING PROPERTIES:

FOOTINGS: f'c = 210 KG/SQ. CM (3,000 PSI) AT 28 DAYS
SLABS: f'c = 210 KG/SQ. CM (3,000 PSI) AT 28 DAYS

2. ALL REINFORCING STEEL SHALL BE DEFORMED BARS CONFORMING TO ASTM A615 GRADE 60 UNLESS NOTED OTHERWISE.

3. LOCATION OF ALL CONCRETE JOINTS, OTHER THAN THOSE SPECIFIED, SHALL BE APPROVED BY THE CONTRACTING OFFICER BEFORE CONCRETE PLACEMENT.

4. MINIMUM PROTECTIVE COVER OF REINFORCEMENT (SEE DETAILS) SHALL BE AS FOLLOWS:

FOOTINGS, 75mm CLEAR BOTTOM AND SIDES, 40mm CLEAR TOP.
CONCRETE SLABS-ON-GRADE, 25mm CLEAR TOP.
WALLS, 40mm CLEAR SIDES.
CONCRETE PIERS, 40mm CLEAR TO TIES.

5. MINIMUM CONCRETE SPLICES AND HOOKS FOR REINFORCING STEEL SHALL CONFORM TO ACI 318, CURRENT EDITION.

6. CONCRETE WORK SHALL BE COORDINATED WITH DRAINS, UNDERGROUND UTILITIES, MECHANICAL, ELECTRICAL, AND ARCHITECTURAL PLANS. CONCRETE SHALL NOT BE CAST UNTIL THESE ITEMS HAVE BEEN INSTALLED AND ACCEPTED.

7. CONCRETE FINISHES SHALL BE PROVIDED AS DESCRIBED IN THE SPECIFICATIONS.

8. CORNER BARS SHALL BE PROVIDED AT ALL INTERSECTIONS; BAR SIZE AND SPACING TO MATCH LARGER BAR.

9. SLABS ON GRADE SHALL BE REINFORCED AT ALL PENETRATIONS AND RE-ENTRANT CORNERS. PLACE 3-ø10 x 1.0 METER AROUND FLOOR DRAINS. PLACE 2-ø12 x 1.0 METER (MINIMUM) AT RE-ENTRANT CORNERS.

STRUCTURAL STEEL:

1. STRUCTURAL STEEL SHALL BE FABRICATED AND ERECTED IN ACCORDANCE WITH THE AMERICAN INSTITUTE OF STEEL CONSTRUCTION, "SPECIFICATION FOR STRUCTURAL STEEL BUILDINGS", 1989 (AISC ASD MANUAL, 9TH EDITION).

2. STEEL SHALL CONFORM TO THE FOLLOWING REQUIREMENTS UNLESS NOTED OTHERWISE:

MISCELLANEOUS PLATES AND ANGLES - ASTM A36 (Fy = 36 KSI)
RECTANGULAR HSS - ASTM A500, GRADE B (Fy = 46 KSI)
"W" SHAPES - ASTM A992

3. NO STRUCTURAL STEEL SHALL BE FABRICATED OR ERECTED UNTIL SHOP DRAWINGS HAVE BEEN APPROVED.

4. NO HOLES OTHER THAN THOSE SPECIFICALLY DETAILED SHALL BE ALLOWED THROUGH STRUCTURAL STEEL MEMBERS. CUTTING OF STEEL SHALL NOT BE PERMITTED WITHOUT APPROVAL OF THE CONTRACTING OFFICER.

5. THE CONTRACTOR SHALL VERIFY ALL SHOP DRAWING DIMENSIONS WITH THE STRUCTURAL AND ARCHITECTURAL PLANS AND DETAILS, AND WITH FIELD DIMENSIONS OF COLUMN LAYOUT.

7. BOLTED CONNECTIONS SHALL BE MADE WITH HIGH STRENGTH BOLTS CONFORMING TO ASTM A325, 20mm DIAMETER MINIMUM UNLESS NOTED OTHERWISE.

8. CONNECTIONS NOT SHOWN ON DRAWINGS SHALL BE DESIGNED BY THE FABRICATOR. CONNECTIONS SHALL BE SELECTED TO SUPPORT ONE HALF THE TOTAL UNIFORM LOAD CAPACITY SHOWN IN THE ALLOWABLE LOAD TABLES, PART 2 OF LATEST AISC MANUAL FOR THE GIVEN BEAM, SPAN, AND GRADE OF STEEL SPECIFIED. WHERE POSSIBLE, DOUBLE ANGLE CONNECTIONS SHALL BE USED.

MASONRY:

1. ENGINEERED MASONRY IS DESIGNED IN ACCORDANCE WITH "BUILDING CODE REQUIREMENTS FOR MASONRY STRUCTURES" (ACI 530-99/ ASCE 5-99/TMS 402-99).

2. UNITS: ASTM C90, TYPE (I) (NORMAL WEIGHT, MOISTURE CONTROLLED) (OR EQUIVALENT DIN, ACI OR EN STANDARDS) MORTAR: ASTM C270 TYPE S (OR EQUIVALENT DIN, ACI OR EN STANDARDS)

3. FULLY GROUT ALL CELLS CONTAINING REINFORCING STEEL OR ANCHORS UNLESS NOTRED OTHERWISE.

4. USE 50 db FULL CONTACT LAP SPLICES FOR REINFORCING STEEL IN CMU WALLS UNLESS NOTED OTHERWISE.

5. SEE SPECIFICATION 04200 FOR MASONRY BLOCK. ALL VERTICAL CELLS OF MASONRY BLOCK WITH REINFORCING SHALL BE GROUTED SOLID TO FORM A COMPOSITE MASONRY AND STEEL ASSEMBLY.

6. PROVIDE AN ADDITIONAL VERTICAL REINFORCEMENT AT EACH SIDE OF INTERSECTION OF EXTERIOR WALLS, AND AT EACH SIDE OF ALL MASONRY OPENINGS GREATER THAN 250mm IN WIDTH. IN OPENINGS WIDER THAN 600mm, PROVIDE ADDITIONAL VERTICAL REINFORCEMENT IN TWO ADJACENT CELLS ON EACH SIDE OF THE OPENING. ADDED VERTICAL REINFORCEMENT SHALL BE CONTINUOUS FOR THE FULL HEIGHT OF WALL.

7. PROVIDE BOND BEAMS AT 1200mm MAXIMUM VERTICAL SPACING (EXCEPT AT RESTROOM AND SHOWER STALL PARTITION WALLS).

8. PROVIDE LINTEL ABOVE ALL MASONRY OPENINGS AS SHOWN IN DETAIL 3/SS-02.

9. PROVIDE A BOND BEAM BELOW ALL MASONRY OPENINGS AND EXTEND A MINIMUM OF 400mm BEYOND EACH SIDE OF OPENING.

UNLESS OTHERWISE NOTED, LINEAR DIMENSIONS SHOWN ARE IN MILLIMETERS.

SYMBOL	DESCRIPTION	DATE	APP.

Designed By: D. SMITH
Drawn By: D. SMITH
Checked By: M. THOMPSON
Date: 10 MAY 2007
File No. AF0707
I.S.O. Sheet File Name: AF0707E-SS00DT.DWG
Solicitation Number: -

US Army Corps of Engineers Transatlantic Programs Center

ANA REGIONAL BRIGADE
PAKTIKA, AFGHANISTAN
FIRE STATION

TYPICAL MASONRY DETAILS

SHEET REFERENCE NUMBER:
E-SS-00

$DATE$
$FILE$

D SIZE BORDER
32 X 20.5

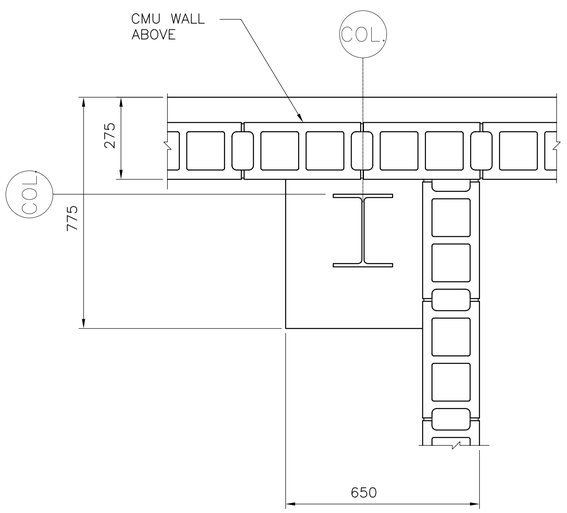

(SLAB LEVEL)

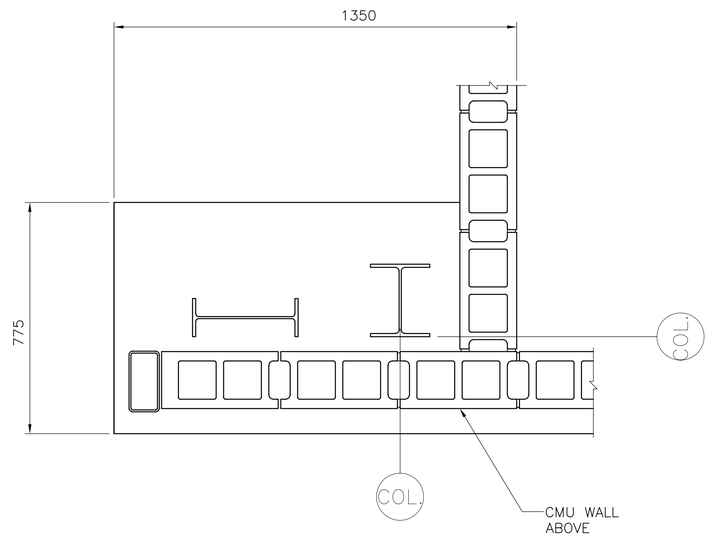

(SLAB LEVEL)

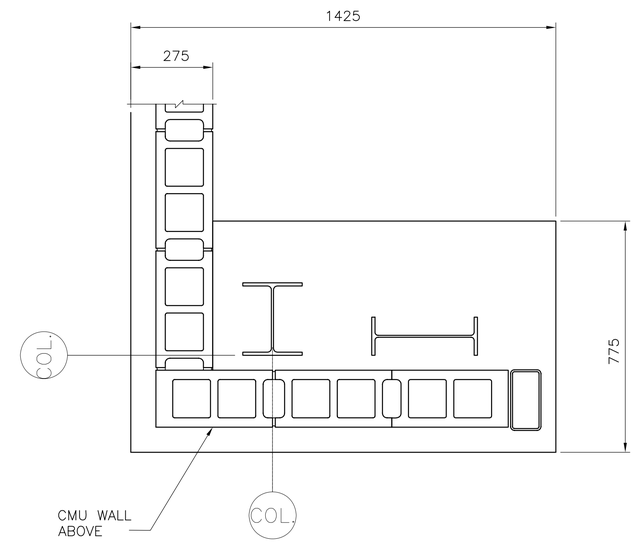

(SLAB LEVEL)

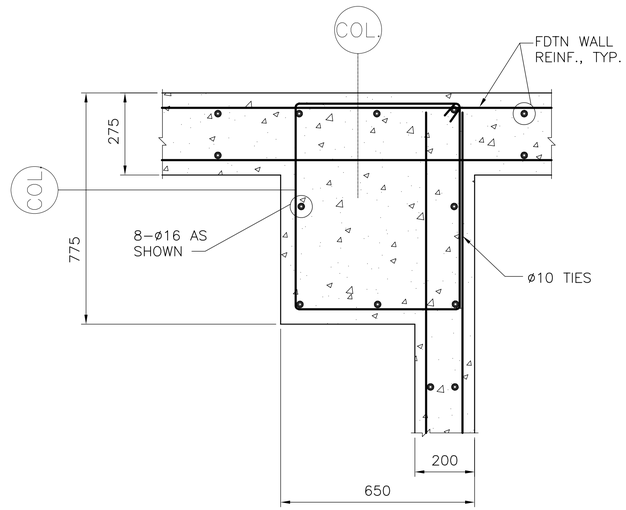

(FOUNDATION LEVEL)

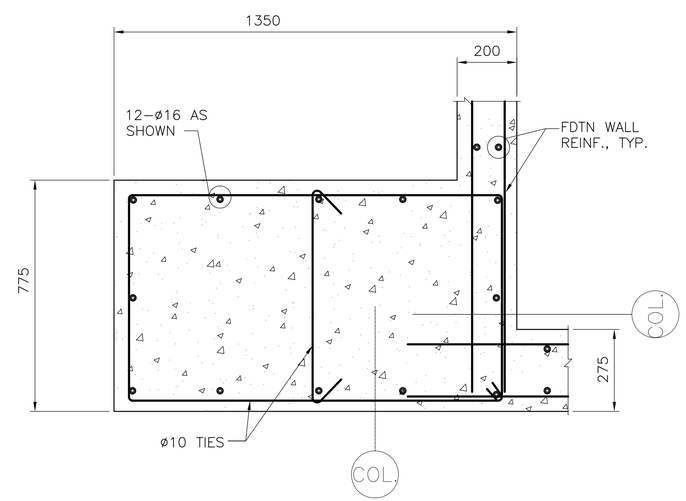

(FOUNDATION LEVEL)

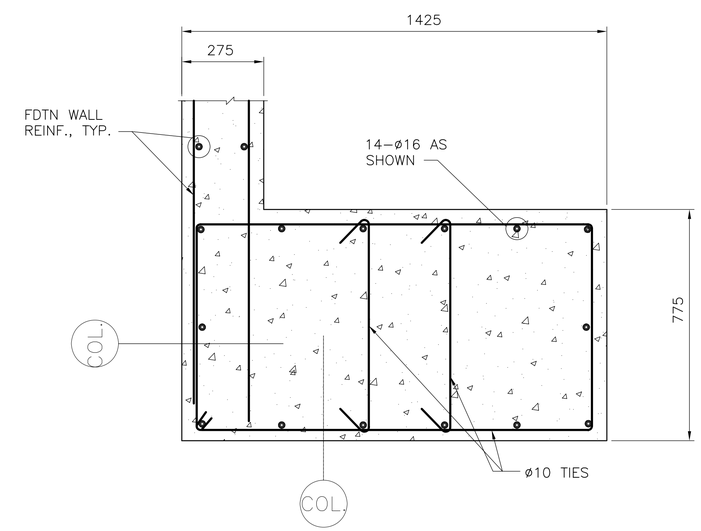

(FOUNDATION LEVEL)

- PEDESTAL P5

E–S–01 | REF. | SCALE: 1:10

- PEDESTAL P6

E–S–01 | REF. | SCALE: 1:10

- PEDESTAL P7

E–S–01 | REF. | SCALE: 1:10

200 0 200mm
SCALE: 1 = 10

UNLESS OTHERWISE NOTED, LINEAR DIMENSIONS SHOWN ARE IN MILLIMETERS.

SYMBOL	DESCRIPTION	DATE	APP.

Designed By: M. THOMPSON
Drawn By: D. SMITH
Checked By: M. THOMPSON
Date: 10 MAY 2007
File No. AF0707
I.S.O. Sheet File Name: AF0707E–SB06SE.DWG
Solicitation Number: –

US Army Corps of Engineers Transatlantic Programs Center

ANA REGIONAL BRIGADE
PAKTIKA, AFGHANISTAN
FIRE STATION

COLUMN PEDESTAL DETAILS

SHEET REFERENCE NUMBER:
E–S–06

$DATE$
$FILE$

D SIZE BORDER
32 X 20.5

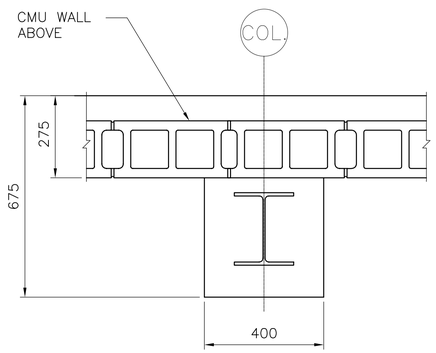

(SLAB LEVEL)

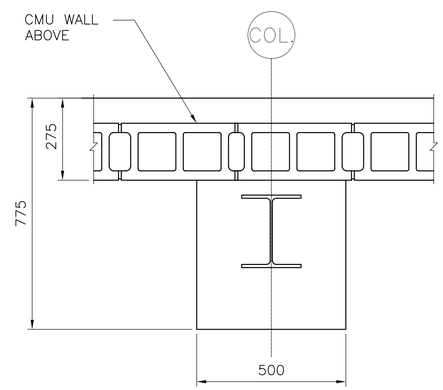

(SLAB LEVEL)

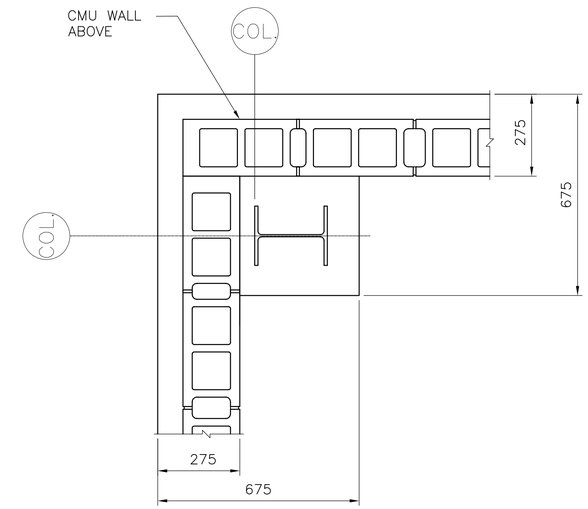

(SLAB LEVEL)

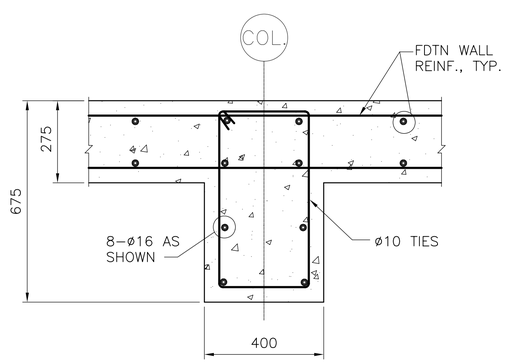

(FOUNDATION LEVEL)

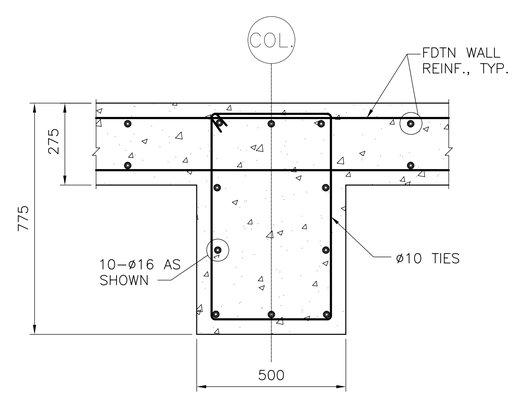

(FOUNDATION LEVEL)

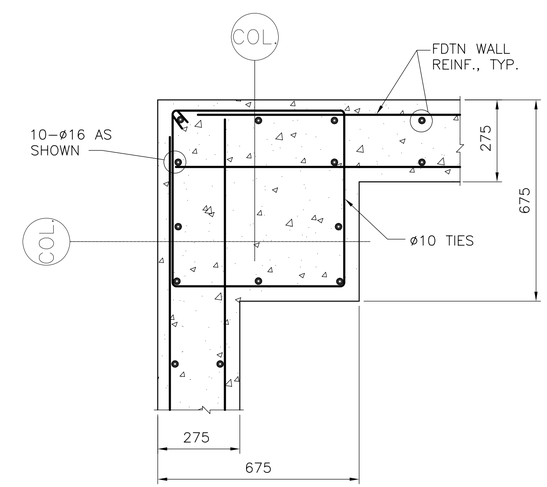

(FOUNDATION LEVEL)

1 PEDESTAL P1

E–S–01 REF. SCALE: 1:10

2 PEDESTAL P2

E–S–01 REF. SCALE: 1:10

3 PEDESTAL P3

E–S–01 REF. SCALE: 1:10

200 0 200mm
SCALE: 1 = 10

UNLESS OTHERWISE NOTED, LINEAR DIMENSIONS SHOWN ARE IN MILLIMETERS.

SYMBOL	DESCRIPTION	DATE	APP.

Designed By: M. THOMPSON
Date: 10 MAY 2007
Drawn By: D. SMITH
File No. AF0707
Checked By: M. THOMPSON
I.S.O. Sheet File Name: AF0707E–SB05SE.DWG
Solicitation Number: –

US Army Corps of Engineers Transatlantic Programs Center

ANA REGIONAL BRIGADE
PAKTIKA, AFGHANISTAN
FIRE STATION

COLUMN PEDESTAL DETAILS

SHEET REFERENCE NUMBER:
E–S–05

$DATE$
$FILE$

D SIZE BORDER
32 X 20.5

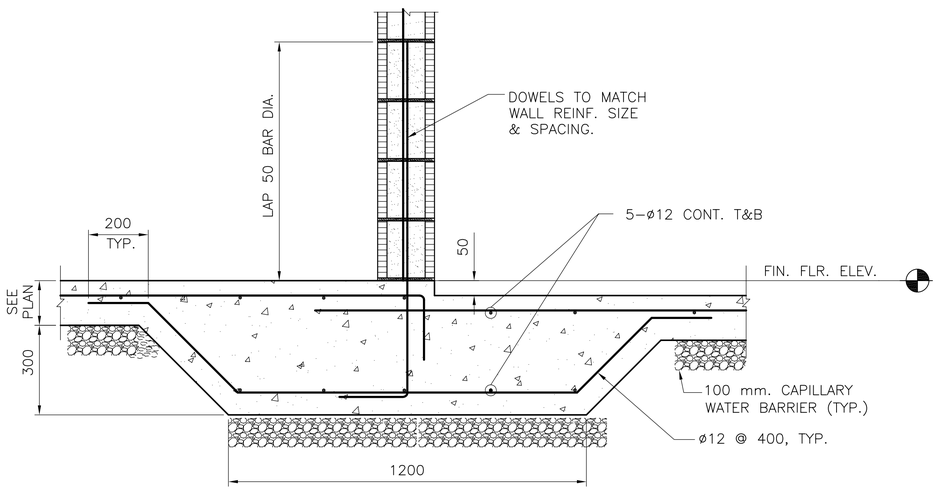

1 SECTION AT SLAB DEPRESSION

E-S-01 REF. SCALE: 1:10

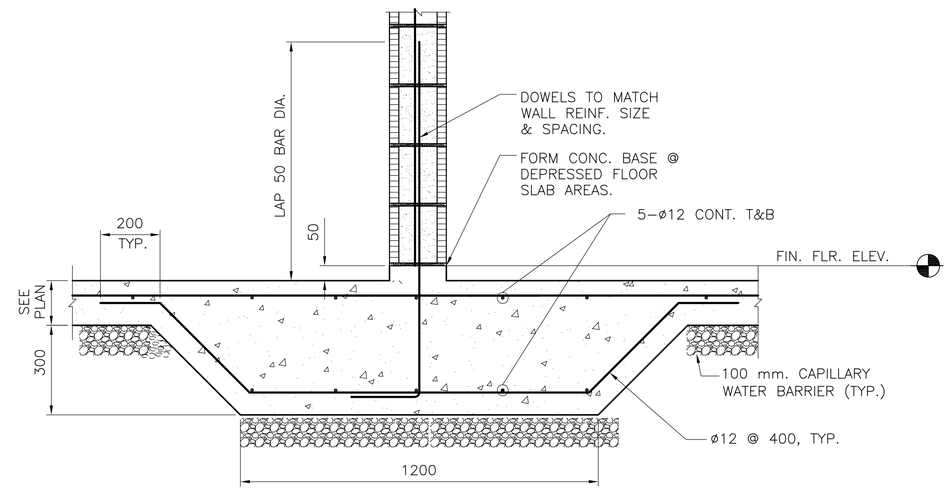

2 SECTION AT INTERIOR WALL

E-S-01 REF. SCALE: 1:10

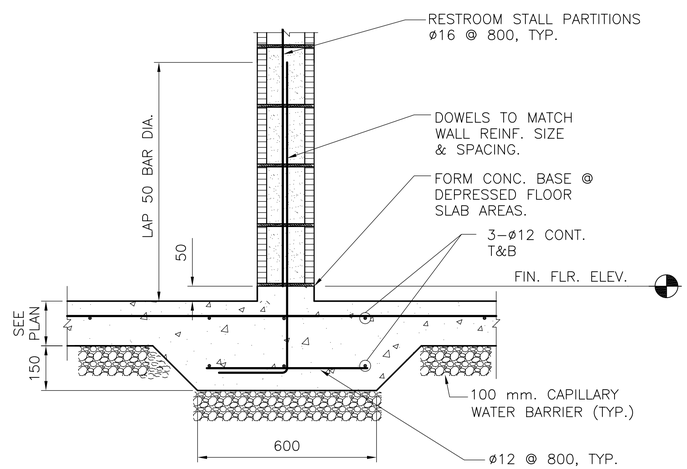

3 SECTION AT RESTROOM STALL PARTITION WALLS

E-S-01 REF. SCALE: 1:10

200 0 200mm
SCALE: 1 = 10

UNLESS OTHERWISE NOTED, LINEAR DIMENSIONS SHOWN ARE IN MILLIMETERS.

SYMBOL	DESCRIPTION	DATE	APP.

Designed By: D. SMITH
Drawn By: D. SMITH
Checked By: M. THOMPSON
Date: 10 MAY 2007
File No. AF0707
I.S.O. Sheet File Name: AF0707E–SB04SE.DWG
Solicitation Number: –

US Army Corps of Engineers Transatlantic Programs Center

ANA REGIONAL BRIGADE
PAKTIKA, AFGHANISTAN
FIRE STATION

THICKENED SLAB SECTIONS

SHEET REFERENCE NUMBER:
E–S–04

$DATE$
$FILE$

D SIZE BORDER
32 X 20.5

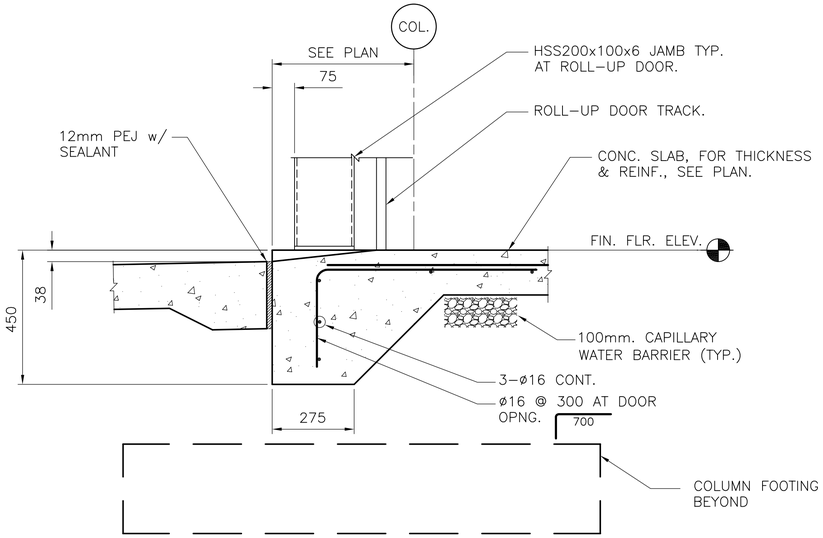

1 SECTION AT ROLL- UP DOOR

E-S-01 REF. SCALE: 1:10

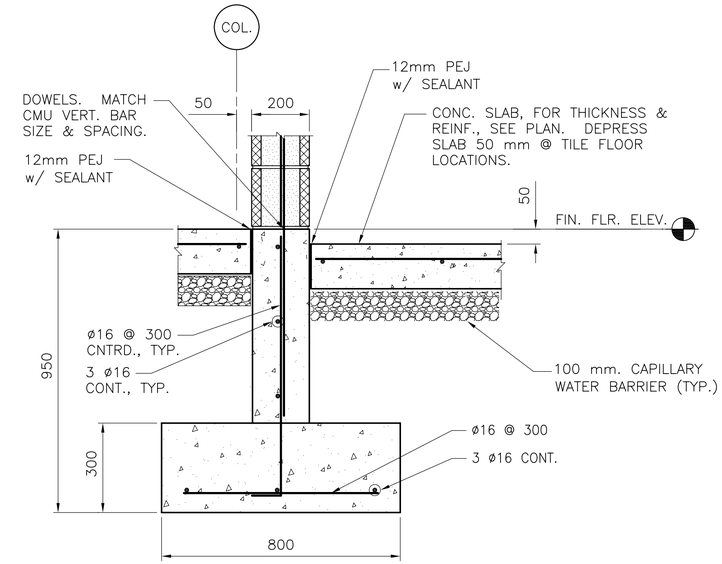

2 SECTION AT INTERIOR STEM WALL

E-S-01 REF. SCALE: 1:10

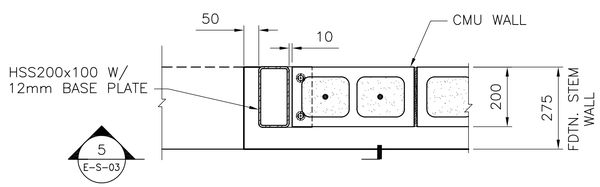

3 DETAIL AT ROLL- UP DOOR

E-S-01 REF. SCALE: 1:20

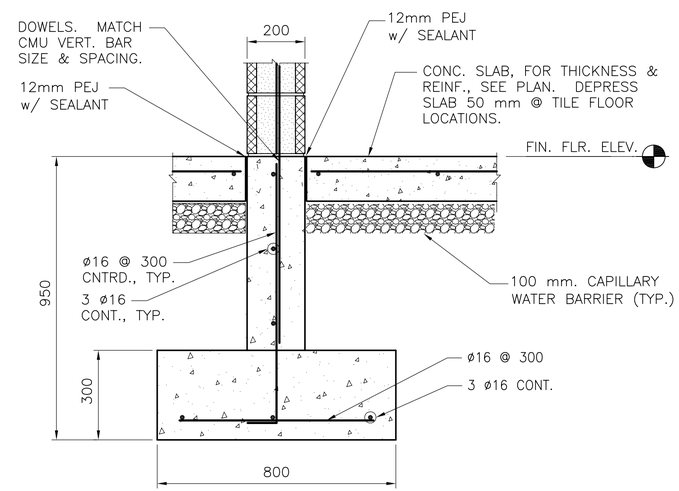

4 SECTION AT INTERIOR STEM WALL

E-S-01 REF. SCALE: 1:10

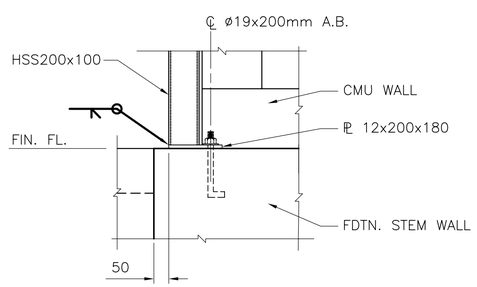

5 SECTION

E-S-03 REF. SCALE: 1:20

200 0 200mm
SCALE: 1 = 10

UNLESS OTHERWISE NOTED, LINEAR DIMENSIONS SHOWN ARE IN MILLIMETERS.

SYMBOL	DESCRIPTION	DATE	APP.

Designed By: D. SMITH
Drawn By: D. SMITH
Checked By: M. THOMPSON
Date: 10 MAY 2007
File No. AF0707
I.S.O. Sheet File Name: AF0707E-SB03SE.DWG
Solicitation Number: –

US Army Corps of Engineers Transatlantic Programs Center

ANA REGIONAL BRIGADE
PAKTIKA, AFGHANISTAN
FIRE STATION

FOUNDATION SECTIONS

SHEET REFERENCE NUMBER:
E-S-03

$DATE$
$FILE$

D SIZE BORDER
32 X 20.5

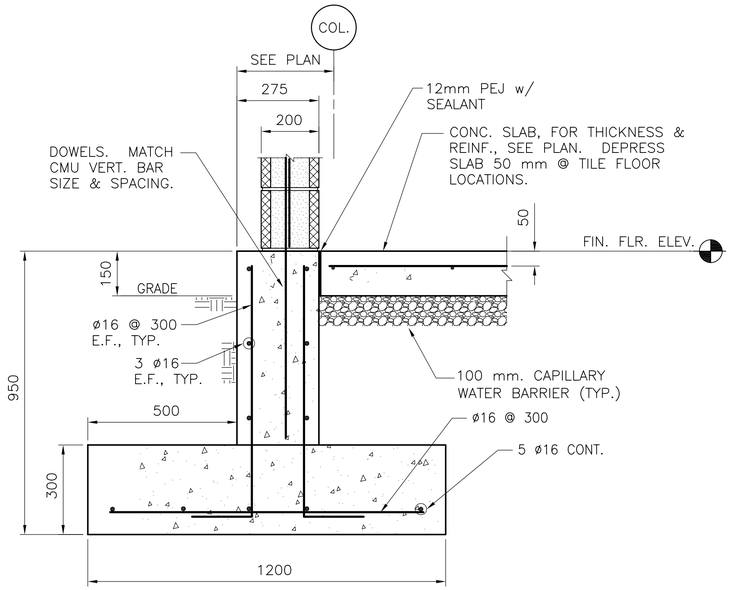

1 SECTION AT EXTERIOR CMU WALL

E-S-01 REF. SCALE: 1:10

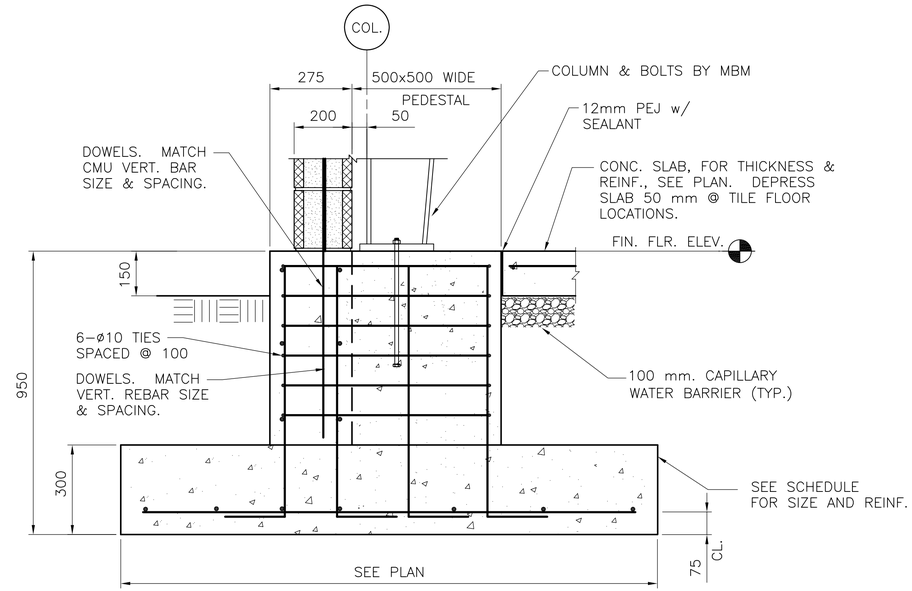

2 SECTION AT SIDEWALL COLUMN FOOTING

E-S-01 REF. SCALE: 1:10

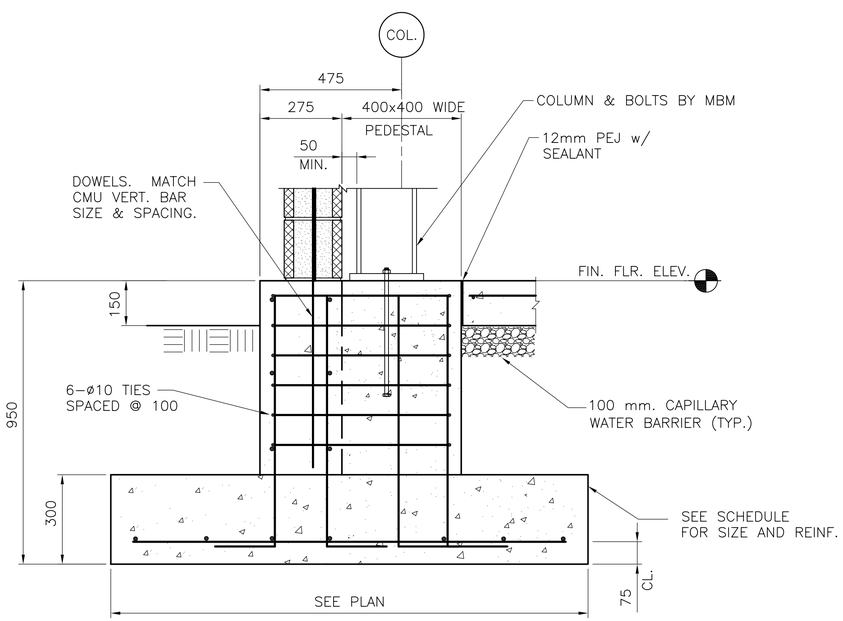

3 SECTION AT ENDWALL COLUMN FOOTING

E-S-01 REF. SCALE: 1:10

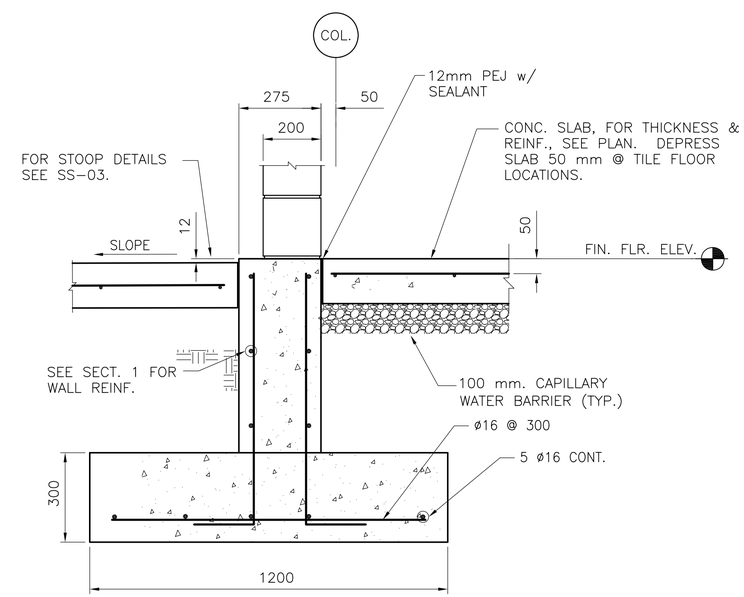

4 SECTION AT EXTERIOR DOOR

E-S-01 REF. SCALE: 1:10

200 0 200mm
SCALE: 1 = 10

UNLESS OTHERWISE NOTED, LINEAR DIMENSIONS SHOWN ARE IN MILLIMETERS.

SYMBOL	DESCRIPTION	DATE	APP.

Designed By: D. SMITH
Drawn By: D. SMITH
Checked By: M. THOMPSON
Date: 10 MAY 2007
File No. AF0707
I.S.O. Sheet File Name: AF0707E-SB02SE.DWG
Solicitation Number: –

US Army Corps of Engineers Transatlantic Programs Center

ANA REGIONAL BRIGADE
PAKTIKA, AFGHANISTAN
FIRE STATION

FOUNDATION SECTIONS

SHEET REFERENCE NUMBER:
E-S-02

$DATE$
$FILE$

D SIZE BORDER
32 X 20.5

SHEET NOTES:

1. CONT. UPPER BOND BEAM 200x200 W/ 2–ø12 CONT BARS TOP & BOT.

2. CMU WALL REINFORCEMENT SHALL BE ø16 @ 600 U.N.O. GROUT VERTICAL CELLS WITH REINFORCEMENT.

3. TOP OF CMU WALL ELEVATION SHALL BE 2.8M A.F.F., UNLESS NOTED OTHERWISE.

5. REFER TO SHEET E–SS–01 AND 02 FOR TYPICAL MASONRY DETAILS.

6. REFER TO SHEET E–SS–03 FOR TYPICAL SLAB ON GRADE DETAILS.

7. REFER TO SHEET E–SS–04 FOR TYPICAL EXTERIOR CONCRETE PAD DETAILS.

8. SLAB ON GRADE SHALL BE 150 MM CONCRETE ON A 100 MM CAPILLARY WATER BARRIER. SEE SHEET E–SS–03 FOR TYPICAL SLAB REINFORCEMENT.

COLUMN FOOTING SCHEDULE

MARK	SIZE	REINFORCING	PEDESTAL MARK
F1	1000 x 1600 x 300mm	TRANSVERSE – 7 ø16 (B) LONGITUDINAL – 4 ø16 (B)	P1
F2	1500 x 1800 x 300mm	TRANSVERSE – 7 ø16 (B) LONGITUDINAL – 6 ø16 (B)	P2
F3	1600 x 1600 x 300mm	TRANSVERSE – 7 ø16 (B) LONGITUDINAL – 6 ø16 (B)	P3
F4	2000 x 1800 x 300mm	TRANSVERSE – 7 ø16 (B) LONGITUDINAL – 7 ø16 (B)	P2
F5	1400 x 1600 x 300mm	TRANSVERSE – 7 ø16 (B) LONGITUDINAL – 5 ø16 (B)	P5
F6	2000 x 1800 x 300mm	TRANSVERSE – 7 ø16 (B) LONGITUDINAL – 7 ø16 (B)	P6
F7	2200 x 1800 x 300mm	TRANSVERSE – 7 ø16 (B) LONGITUDINAL – 7 ø16 (B)	P7

NOTE: FOR PEDESTAL DETAILS AND REINFORCEMENT, SEE SHEET E–S–05 & 06.

PRE–ENGINEERED BUILDING DESIGN REQUIREMENTS:

1. THE DESIGN SHALL BE IN ACCORDANCE WITH THE 2003 INTERNATIONAL BUILDING CODE.

2. FOR DESIGN LOADS, SEE GENERAL NOTES.

3. COLUMN BASE PLATES HAVE BEEN ASSUMED AS "PINNED" FOR THE FOUNDATION SHOWN.

4. LONGITUDINAL BRACE AND WIND POST LOCATIONS HAVE BEEN SHOWN AT THE PREFERRED LOCATIONS. COORDINATE BRACE LOCATIONS WITH MECHANICAL AND ELECTRICAL EQUIPMENT.

5. THE METAL BUILDING MANUFACTURER SHALL PROVIDE THE DESIGN, FABRICATION AND DELIVERY OF ALL BUILDING ANCHOR BOLTS. THE BUILDING MANUFACTURER SHALL PROVIDE SETTING TEMPLATES FOR ALL EMBEDDED ANCHOR BOLTS. ALL ANCHOR BOLTS SHALL BE THE "HEADED" TYPE, BENT "L" BOLTS WILL NOT BE ACCEPTABLE.

6. SUBMITTAL OF SHOP DRAWINGS AND DESIGN CALCULATIONS IS REQUIRED PRIOR TO FABRICATION.

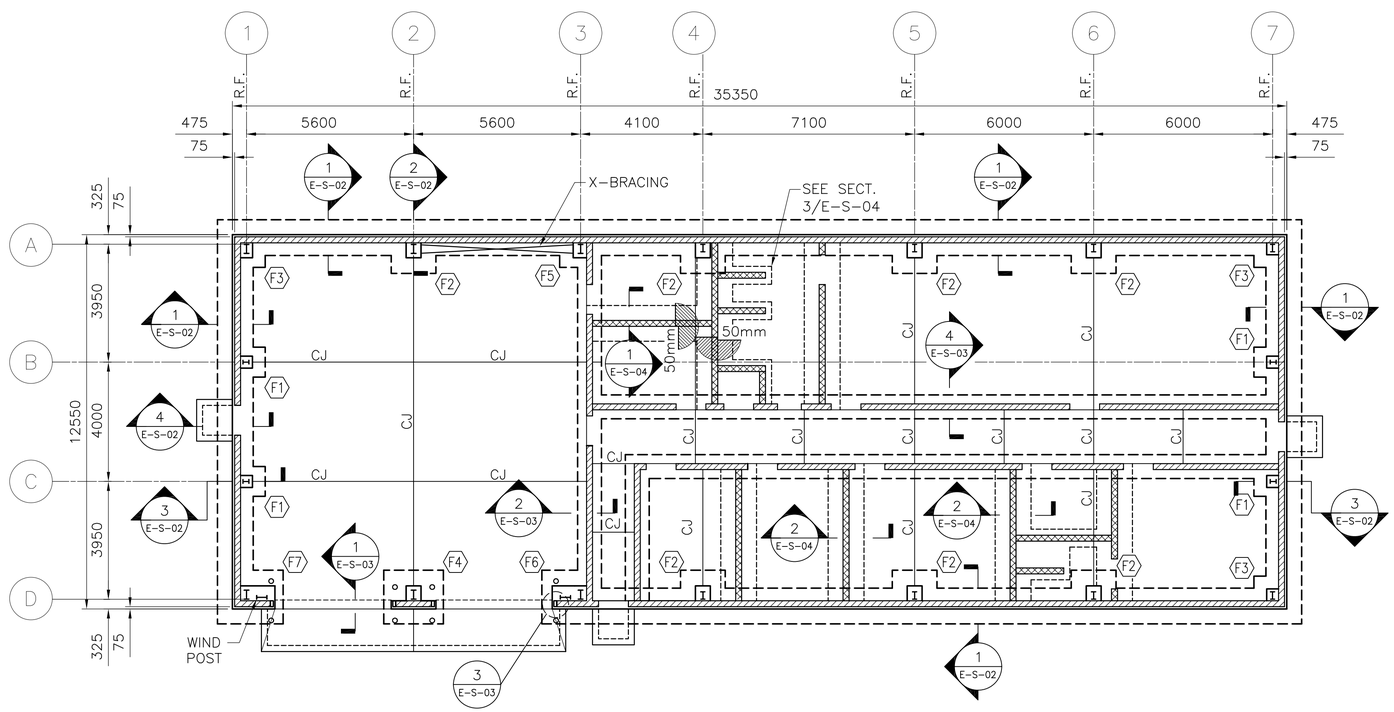

LEGEND:

CANTILEVERED CMU WALL ON SPREAD FOOTING; TOW AT EL. 2800

CANTILEVERED CMU WALL ON THICKENED SLAB; TOW AT EL. 2800

1 FOUNDATION PLAN

E–S–01 REF. SCALE: 1:100

2000 0 2000mm
SCALE: 1 = 100

UNLESS OTHERWISE NOTED, LINEAR DIMENSIONS SHOWN ARE IN MILLIMETERS.

SYMBOL	DESCRIPTION	DATE	APP.

Designed By: D. SMITH
Drawn By: D. SMITH
Checked By: D. WOODWARD
Date: 10 MAY 2007
File No. AF0707
I.S.O. Sheet File Name: AF0707E–SB01PN.DWG
Solicitation Number: –

US Army Corps of Engineers Transatlantic Programs Center

ANA REGIONAL BRIGADE
PAKTIKA, AFGHANISTAN
FIRE STATION

FOUNDATION PLAN

SHEET REFERENCE NUMBER:
E–S–01

$DATE$
$FILE$

D SIZE BORDER
32 X 20.5

PLUMBING LEGEND

SYMBOL	DESCRIPTION
AV	ANGLE VALVE
BV	BALL VALVE
CV	CHECK VALVE
	COCK VALVE
DV	DRAIN VALVE
P7	EMERGENCY SHOWER AND EYE-WASH
FCO	FLOOR CLEANOUT
FD	FLOOR DRAIN
FS	FLOOR SIPHON
P13	FLOOR SINK (FS)
	GALITRAP (GT)
GV	GATE VALVE
HB	HOSE BIBB, PLAN
	INSPECTION MANHOLE
	PIPE TURNING DOWN
	PIPE TURNING UP
CO	PLUG CLEANOUT
	REDUCER-INCREASER
	SUPPORT LOCATION
	Y-TYPE STRAINER
U	UNION
VRV	VACUUM RELIEF VALVE
WHA	WATER HAMMER ARRESTOR

ABBREVIATION	DESCRIPTION
AC	AIR COMPRESSOR
℄	CENTER LINE
CA	COMPRESSED AIR
COYB	CLEANOUT IN YARD BOX
CW	COLD WATER PIPES
DT	DAY TANK
FOR	FUEL OIL RETURN
FOS	FUEL OIL SUPPLY
FT	FLASH TANK
H/L	HIGH LEVEL
HW	HOT WATER PIPES
IC	INSPECTION CHAMBER
I.L	INVERT LEVEL
LD	LEAK DETECTOR
L/L	LOW LEVEL
LSH	LEVEL SWITCH HIGH
LSHH	LEVEL SWITCH HIGH HIGH
LSL	LEVEL SWITCH LOW
LSLL	LEVEL SWITCH LOW LOW
LT	LEVEL TRANSMITTER
OW	OILY WASTE
OWS	OIL WATER SEPARATOR
P	PUMP
RP	RECIRCULATION PUMP
YCO	YARD CLEAN OUT
WOT	WASTE OIL STORAGE TANK
NT	NEUTRALIZATION TANK
GS	GREASE INTERCEPTOR

ABBREVIATION	DESCRIPTION
SP	SOIL PIPE
SR	SHORT RADIUS
U.G.	UNDER GROUND
VP	VENT PIPE
V.R.V	VACUUM RELIEF VALVE
WCO	WALL CLEANOUT
WHA	WATER HAMMER ARRESTOR
WO	WASTE OIL
WP	WASTE PIPE

LINE STYLE	DESCRIPTION
	COLD WATER (CW)
	HOT WATER (HW)
	VENT PIPE (VP)
	SOIL PIPE (SP)
	WASTE PIPE (WS)

EQUIPMENT IDENTIFICATION

EWH-XX-XX
- ELECTRIC WATER HEATER
- UNIT NUMBER
- BUILDING ABBREVIATION

NOTES:

1. INTERIOR SOIL AND WASTE PIPING 80 (3") AND SMALLER SHALL BE ROUTED WITH A 2% SLOPE. INTERIOR SOIL AND WASTE PIPING 100 (4") AND LARGER SHALL BE ROUTED WITH A MINIMUM 1% SLOPE.
2. EXTERIOR SOIL OR WASTE PIPING SHALL BE ROUTED WITH A 2% SLOPE WHEREVER POSSIBLE, OTHERWISE A MINIMUM SLOPE OF 1% SHALL BE USED.
3. WATER AND DRAINAGE PIPING SHALL BE EXTENDED 1.5 m OUTSIDE THE BUILDING UNLESS OTHERWISE INDICATED

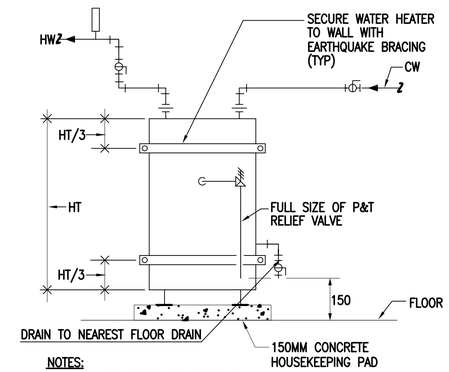

NOTES:
1-FOR PIPE SIZES SEE FLOOR PLAN.
2-FOR HEATER SELECTION SEE SCHEDULE TABLE AT DRAWING NO. E-MP-01 AND SPECIFICATIONS.
3-SECURE WATER HEATER TO FLOOR WITH EXPANSION BOLTS, 20mm (3/4")MIN.

ELECTRIC WATER HEATER PIPING DETAIL

SCALE: N.T.S

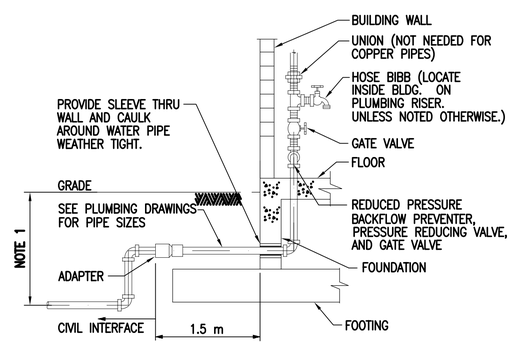

NOTE:
1. THE LEVEL OF WATER SUPPLY PIPE SHOULD BE MIN 800mm BELOW THE FINISH GRADE TO KEEP FROM FREEZING OTHER WISE ISULATION SHALL BE ADDED .

WATER SERVICE ENTRANCE DETAIL

SCALE: N.T.S

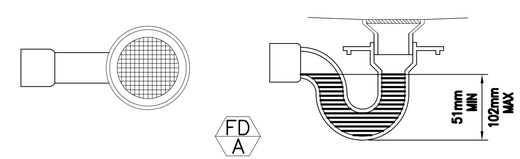

FLOOR DRAIN TYPE A

SCALE: N.T.S

UNLESS OTHERWISE NOTED, LINEAR DIMENSIONS SHOWN ARE IN MILLIMETERS.

SYMBOL	DESCRIPTION	DATE	APP

Designed By:
Drawn By:
Checked By:
Date: 10 MAY 2007
File No. AF0707
I.S.O. Sheet File Name: AF0707E-MP01GN.dwg
Solicitation Number: -

US Army Corps of Engineers Transatlantic Programs Center

ANA REGIONAL BRIGADE
PAKTIKA, AFGHANISTAN
FIRE STATION

PLUMBING LEGEND AND DETAILS
-

SHEET REFERENCE NUMBER:
E-GP-01

D SIZE BORDER
32 X 20.5

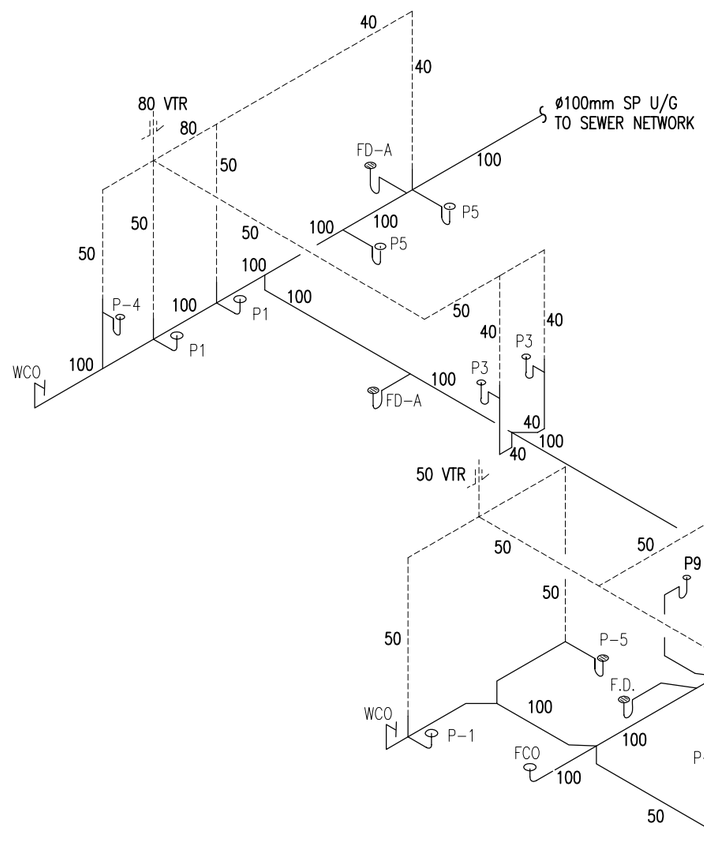

PLUMBING WASTE RISER

SCALE: NONE

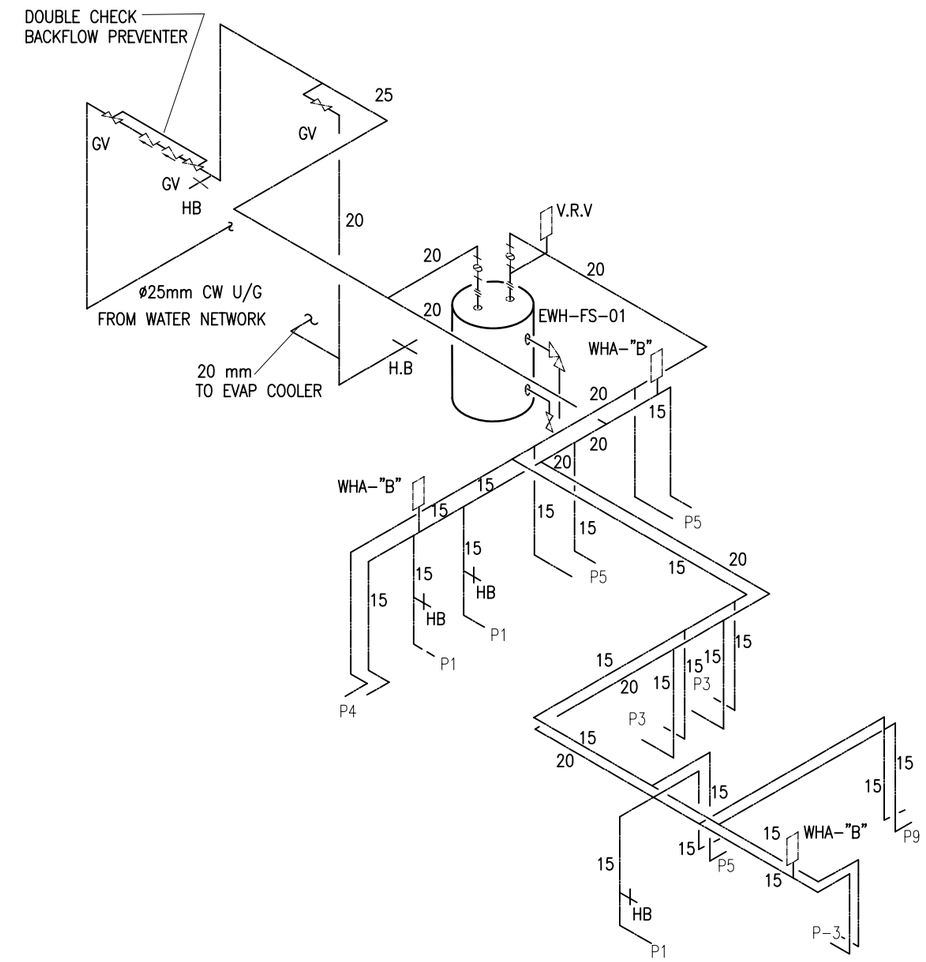

PLUMBING WATER RISER

SCALE: NONE

UNLESS OTHERWISE NOTED, LINEAR DIMENSIONS SHOWN ARE IN MILLIMETERS.

SYMBOL	DESCRIPTION	DATE	APP.

Designed By:
Drawn By:
Checked By:

Date: 10 MAY 2007
File No. AF0707
I.S.O. Sheet File Name: AF0707EMP02IS.dwg
Solicitation Number: –

US Army Corps of Engineers Transatlantic Programs Center

ANA REGIONAL BRIGADE
PAKTIKA, AFGHANISTAN
FIRE STATION

PLUMBING RISERS
– –

SHEET REFERENCE NUMBER:
E–MP–02

$DATE$
$FILE$

D SIZE BORDER
32 X 20.5

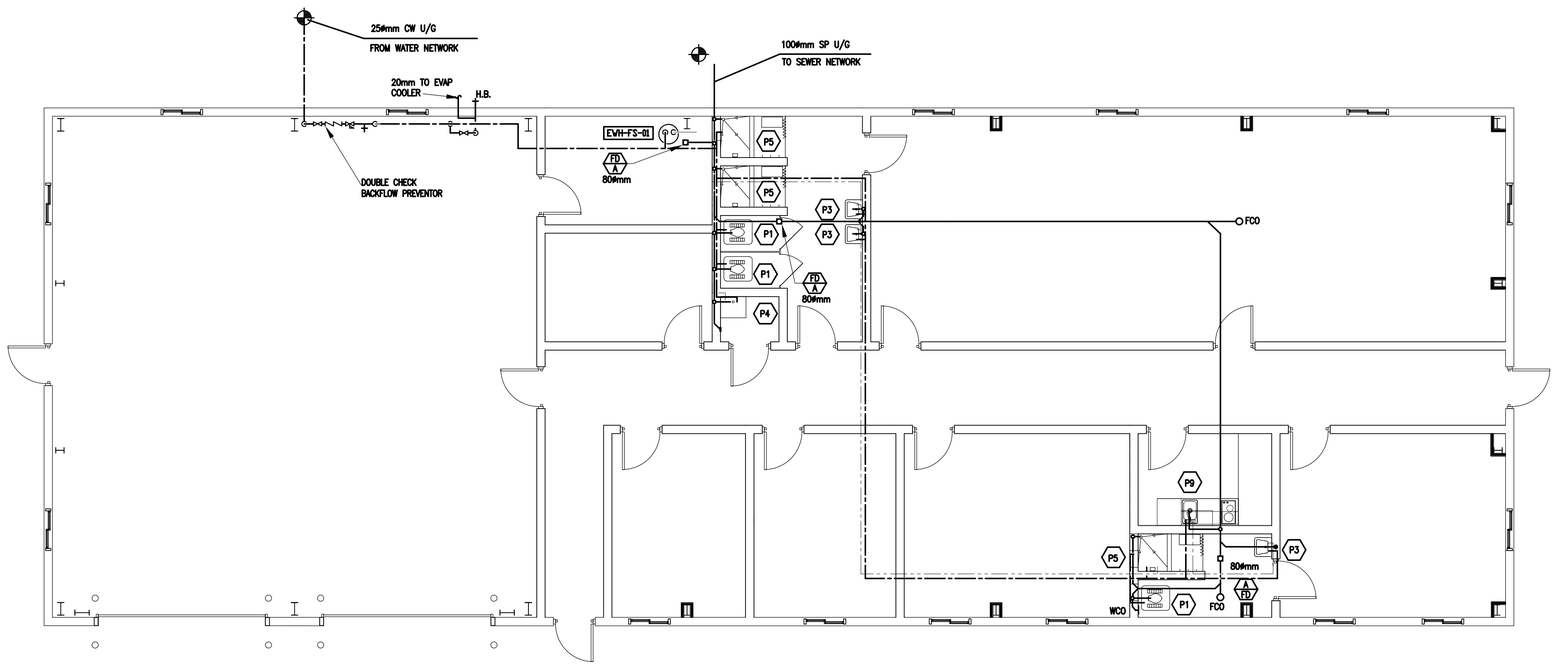

1 PLUMBING FLOOR PLAN

SCALE: 1:70

PLUMBING FIXTURE SCHEDULE

FIX. No.	SYMBOL	FIXTURE NAME	PLUMBING FIXTURE SCHEDULE C.W. MM	C.W. (INCHES)	H.W. MM	H.W. (INCHES)	WASTE MM	WASTE (INCHES)	VENT MM	VENT (INCHES)	REMARKS
P1		EASTERN WATER CLOSET*	15	(1/2")	–	–	100	(4")	50	(2")	*PROVIDE 15mm HOSE BIBB
P3		LAVATORY (WALL HUNG)	15	(1/2")	15	(1/2")	40	(1 1/2")	40	(1 1/2")	
P4		JANITOR SINK (FLOOR MOUNT JANITOR TYPE)	15	(1/2")	15	(1/2")	50	(2")	40	(1 1/2")	
P5		SHOWER	15	(1/2")	15	(1/2")	50	(2")	40	(1 1/2")	
P9		KITCHEN SINK	15	(1/2")	15	(1/2")	50	(2")	40	(1 1/2")	

ELECTRIC WATER HEATER SCHEDULE

Ser No.	EWH Name	Capacity (Gallon)	Electrical Data	TEMPERATURE RISE	REMARKS
Fire Station (FS)					
30	EWH-FS-01	40 gal.	6KW/1PH/220V/50HZ	90F (32.2C)	

UNLESS OTHERWISE NOTED, LINEAR DIMENSIONS SHOWN ARE IN MILLIMETERS.

SYMBOL	DESCRIPTION	DATE	APP.

Designed By:
Drawn By:
Checked By:
Date: 10 MAY 2007
File No. AF0707
I.S.O. Sheet File Name: AF0707EMP01PN.dwg
Solicitation Number: –

US Army Corps of Engineers Transatlantic Programs Center

ANA REGIONAL BRIGADE
PAKTIKA, AFGHANISTAN
FIRE STATION
PLUMBING PLAN
– –

SHEET REFERENCE NUMBER:
E–MP–01

$DATE$
$FILE$

D SIZE BORDER
32 X 20.5

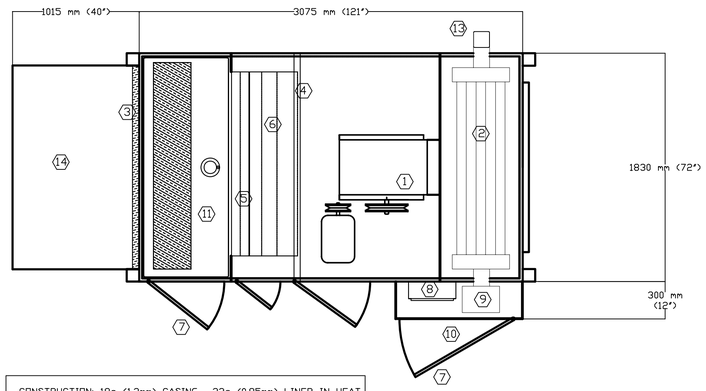

CONSTRUCTION: 18g (1.3mm) CASING. 22g (0.85mm) LINER IN HEAT EXCHANGER SECTION. INSULATION, 1" (25mm) @ 1.5 lb/ft3 (24 kg/m3). 4" (100mm) STRUCTURAL STEEL TUBE BASE. DRY ENAMEL FINISH.
APPROX. WT. 2700 lb (1227 kg)

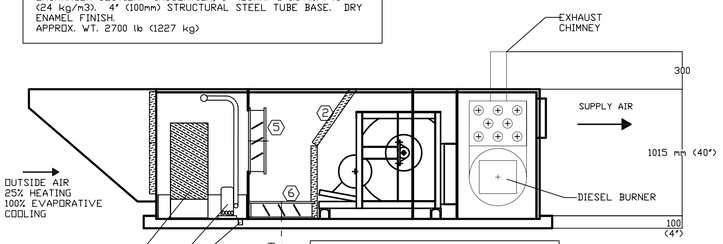

THE EVAPORATIVE-COOLER REQUIRES A 20mm WATER SUPPLY PIPE, AND A 20mm BLEED-OFF DRIAN PIPE TO A DRAIN-PIT. COORDINATE WITH CONTRACTING OFFICER FOR DRAINAGE LOCATION

ELECTRICAL REQUIREMENTS:

BLOWER-MOTOR + FUEL BLOWER & PUMP + EVAP. PUMP = 7.0 ekW.
I = 7000W / 1.73 / 380V / 0.8 = 13.3 amp

THE HEAT-COOL-UNIT MUST BE FACTORY BUILT FROM A SINGLE MANUFACTURER.

AAON MODEL No: DT-??/SW/HV, AAON INTERNATIONAL :: OR EQUAL ::
E-mail ABILLDK@WORLDNET.ATT.NET :: TEL: USA, 623-433-9880

1	S/A FAN & MOTOR: 7000 cfm (11890 m3/h) @ ESP 1" W.C. MOTOR 7.5 Hp, 2 SPEED, 380v/3/50Hz, TEFC, MIN. 40°C AMBIENT
2	AAON INDIRECT-FIRED STAINLESS-STEEL HEAT EXCHANGER. INPUT 350 MBH (102 TKw); DIESEL FUEL; AIR TEMP. RISE 48 °F (27 °C)
3	2" (50mm) 30% EFF WASHABLE PRE-FILTERS.
4	2" (50mm) 30% EFF. PLEATED FINAL-FILTERS.
5	OUTSIDE AIR DAMPER with ACTUATOR.
6	RETURN AIR DAMPER with ACTUATOR.
7	ACCESS DOORS (TYP), HINGED with CAMLOCK
8	ELECTRICAL PANEL
9	DIESEL FUEL BURNER - RIELLO 40 (No. 2 FUEL OIL); FIRING RATE 1.45 TO 2.95 gph (5.49 TO 11.17 lt/h); CAPACITY 203 TO 413 MBH (60 TO 120 tkW) FUEL PRESSURE 100 TO 200 psig (690 TO 1380 KPa).
10	ELECTRICAL & PIPING VESTIBULE
11	EVAPORATIVE COOLING SECTION, EVAP. PADS: 12" CELdek MEDIA @ 85% EFF. Complete with WATER-PUMP, FLOAT-VALVE, DISTRIBUTORS & PIPE.
12	STAINLESS-STEEL SUMP TANK with 3/4" NPT DRAIN PIPE & BLEED-OFF OVERFLOW (to prevent mineral build-up in evap. water).
13	BURNER EXHAUST CHIMNEY 5" X 5 " (125 X 125 mm).
14	OUTDOOR AIR INTAKE HOOD with BIRDSCREEN.

AAON MODEL No. DT-??/SW/HV (DWG: PDM-3788), WT. 2700 lb (1230 Kg)
CONTACT: ANDREW J. BILLDK, AAON INTERNATIONAL; AJB ASSOCIATES, INC.
3120 WEST CAREFREE HIGHWAY, PHOENIX, AZ 85086; TEL: 623-433-9880
E-MAIL: ABILLDK@WORLDNET.ATT.NET
HEAT-COOL-UNITS MANUFACTURED BY AAON CANADA, LEAD TIME 16 TO 18 WEEKS FOR UP TO 100 UNITS ORDERED AT ONE TIME. FACTORY IS LOCATED IN BURLINGTON, ONTARIO, CANADA.

CONTROLS: EVAP/DIESEL UNITS SHALL BE STARTED THROUGH HEAT-COOL-OFF SWITCH AND RUN CONTINOUSLY TO HEAT AND COOL BUILDING. THERMOSTAT SHALL CONTROL SUPPLY TEMPERATURE OFF UNIT.

COOLING MODE: UNIT SHALL OPERATE IN 100% OA MODE. EF-FS-01 SHALL BE ENERGIZED, EXHAUST FAN EF-FS-02 SHALL BE DEENERGIZED.

HEATING MODE: UNIT SHALL OPERATE IN RETURN AIR MODE, RETURNING 75% OF SUPPLY AIR TO UNIT. OUTSIDE AIR SHALL BE 25%. EF-FS-01 SHALL BE DENERGIZED, EXHAUST FAN EF-FSP-02 SHALL BE ENERGIZED.

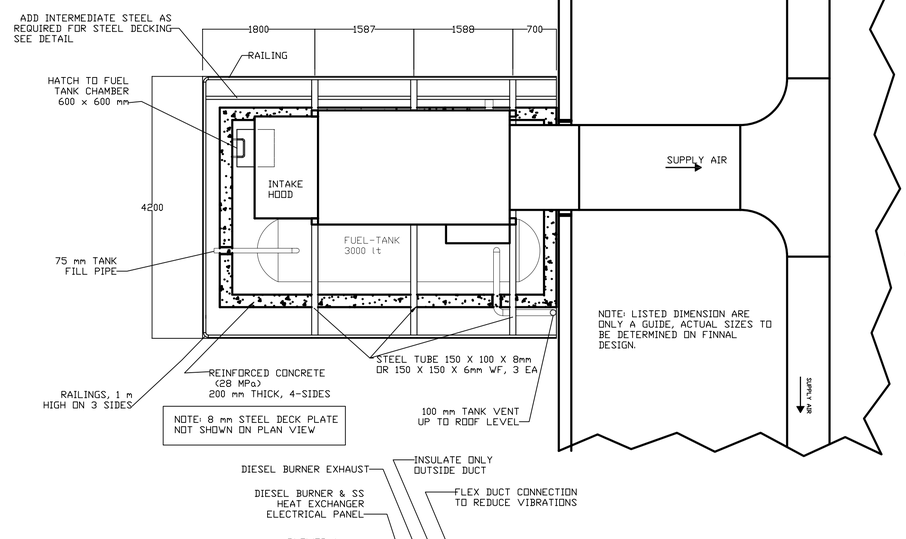

NOTE: 8 mm STEEL DECK PLATE NOT SHOWN ON PLAN VIEW

NOTE: LISTED DIMENSION ARE ONLY A GUIDE, ACTUAL SIZES TO BE DETERMINED ON FINNAL DESIGN.

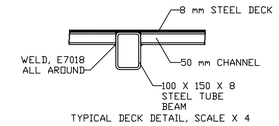

TYPICAL DECK DETAIL, SCALE X 4

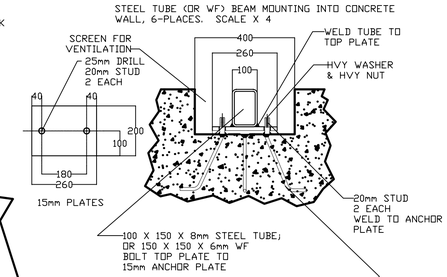

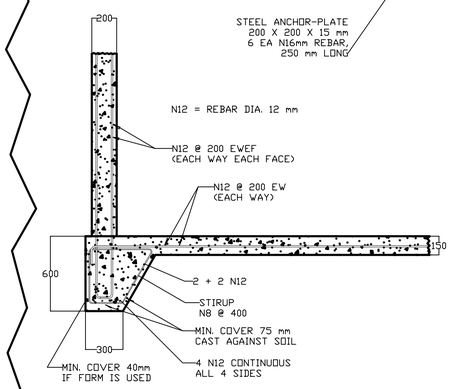

REINFORCED CONCRETE (NO MASONRY) FUEL-TANK ENCLOSURE & MOUNTING PLATFORM FOR HEAT-COOL UNIT.

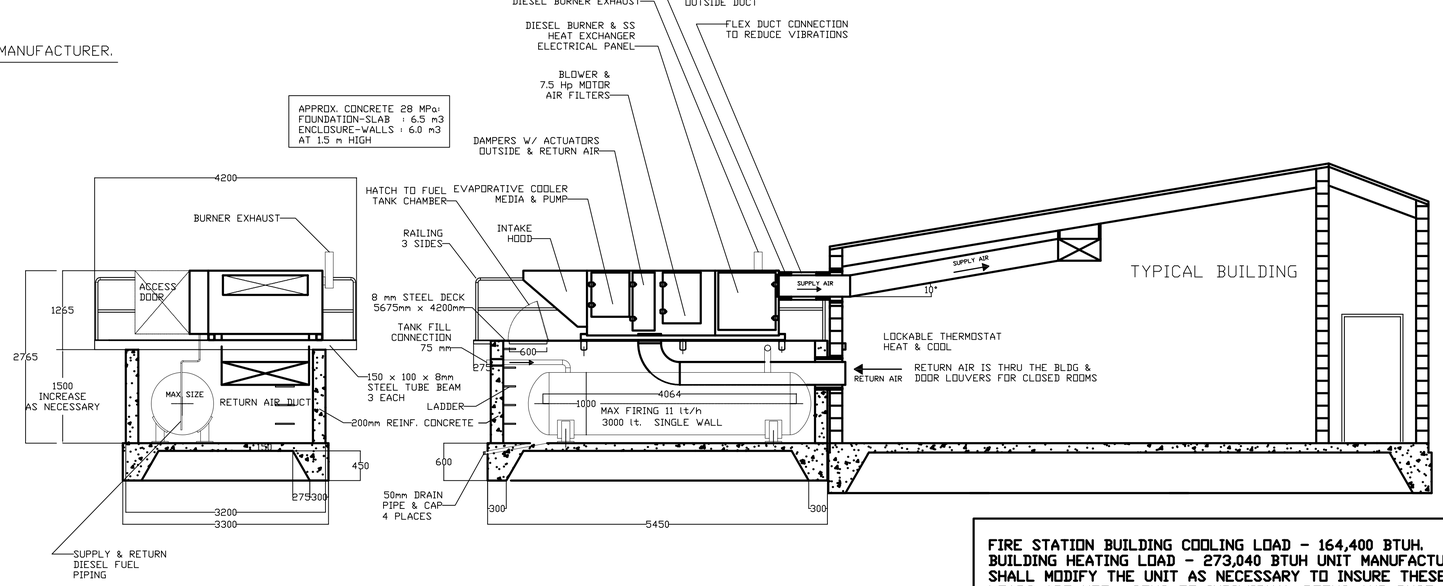

FIRE STATION BUILDING COOLING LOAD - 164,400 BTUH. BUILDING HEATING LOAD - 273,040 BTUH UNIT MANUFACTURER SHALL MODIFY THE UNIT AS NECESSARY TO INSURE THESE LOADS ARE MET. CFMS TO INDIVIDUAL ROOMS AND DUCT SIZE ALSO MAY BE MODIFIED.

UNLESS OTHERWISE NOTED, LINEAR DIMENSIONS SHOWN ARE IN MILLIMETERS.

SYMBOL	DESCRIPTION	DATE	APP.

Date: 10 MAY 2007
File No. AF0707
I.S.O. Sheet File Name: AF0707E-MH04ON.dwg
Solicitation Number: –
Designed By:
Drawn By:
Checked By:

US Army Corps of Engineers Transatlantic Programs Center

ANA REGIONAL BRIGADE
PAKTIKA, AFGHANISTAN
FIRE STATION
HVAC DETAILS
– –

SHEET REFERENCE NUMBER:
E-DM-03

$DATE$
$FILE$

D SIZE BORDER
32 X 20.5

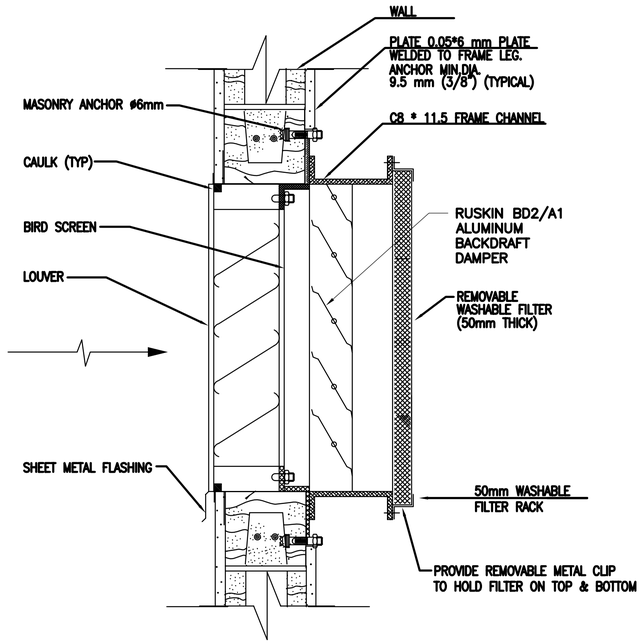

4 WASHABLE FILTER LOUVER DETAILS

SCALE: N.T.S

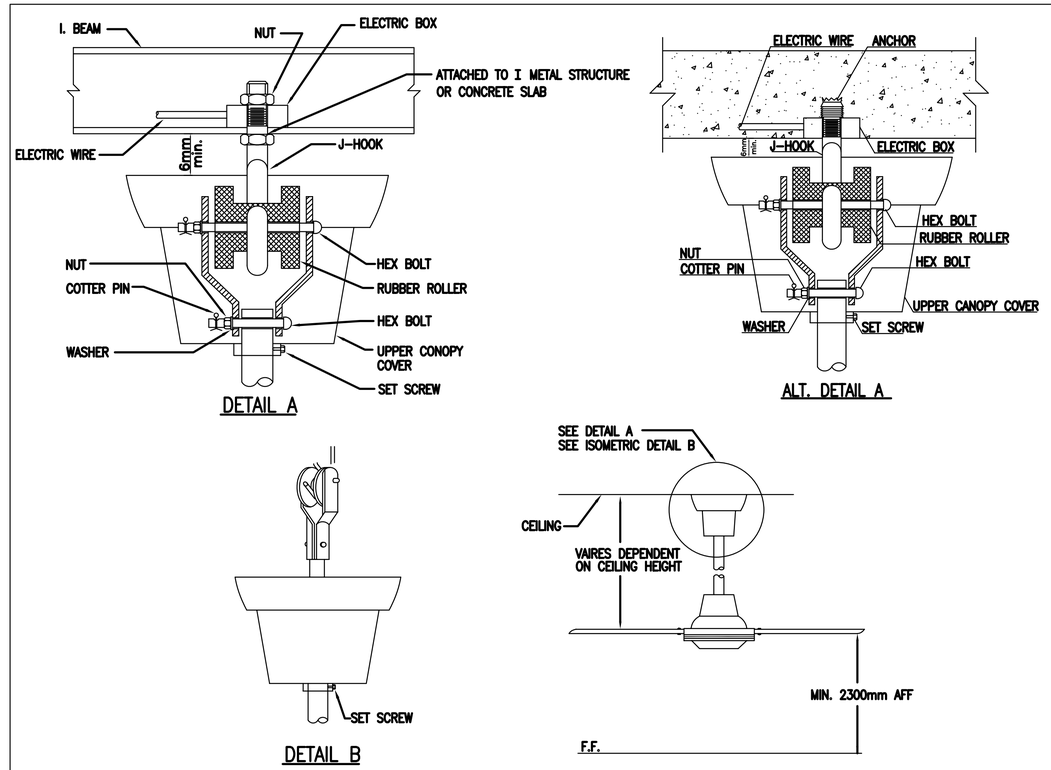

5 CEILING FAN MOUNTING DETAILS

SCALE: N.T.S

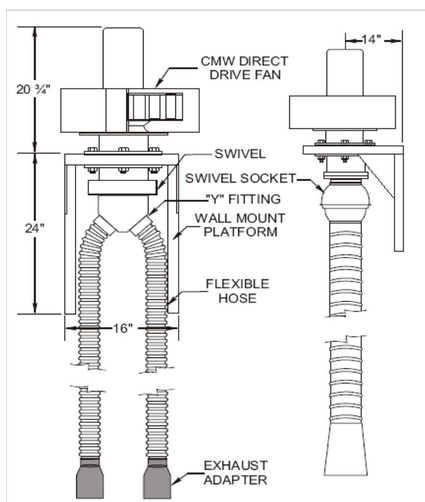

14"	= 350 mm
16"	= 400 mm
24"	= 610 mm
20"	= 510 mm

6 VEHICLE EXHAUST DETAILS

SCALE: N.T.S

NOTE: VEHICLE EXHAUST SYSTEM IS TO BE A CARMON SERIES CO-X DUAL HOSE TYPE OR EQUAL. HOSE TO BE MEDIUM TEMPERATURE (700 DEG F) TYPE HTX-S, 7.5 METER LONG EACH. EXHAUST ADAPTER TO BE MODEL 3A. FAN TO BE CARMON SERIES CMW, 1/2 HP, 270 L/s AT 622 Pa, MOUNTED AT 3 M A.F.F.

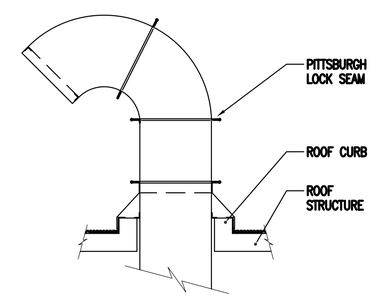

7 GOOSE NECK DETAIL

SCALE: N.T.S

UNLESS OTHERWISE NOTED, LINEAR DIMENSIONS SHOWN ARE IN MILLIMETERS.

SYMBOL	DESCRIPTION	DATE	APP.

Designed By:
Drawn By:
Checked By:
Date: 10 MAY 2007
File No. AF0707
I.S.O. Sheet File Name: AF0707E-MH03GN.dwg
Solicitation Number: –

US Army Corps of Engineers Transatlantic Programs Center

ANA REGIONAL BRIGADE
PAKTIKA, AFGHANISTAN
FIRE STATION
HVAC DETAILS
– –

SHEET REFERENCE NUMBER:
E-DM-02

$DATE$
$FILE$

D SIZE BORDER
32 X 20.5

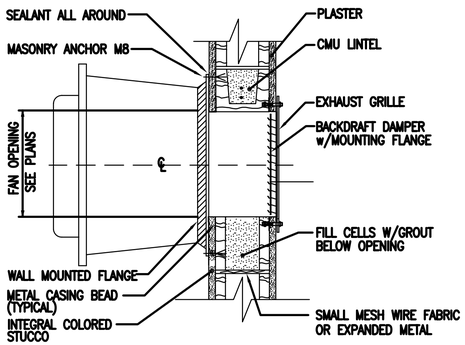

NOTES:-

* GASKET MATERIAL TO BE PROVIDED TO BOTTOM OF FAN INSIDE MOUNTING ANGLES.

1 WALL MOUNTED EXHAUST FAN INSTALLATION DETAIL

SCALE: N.T.S

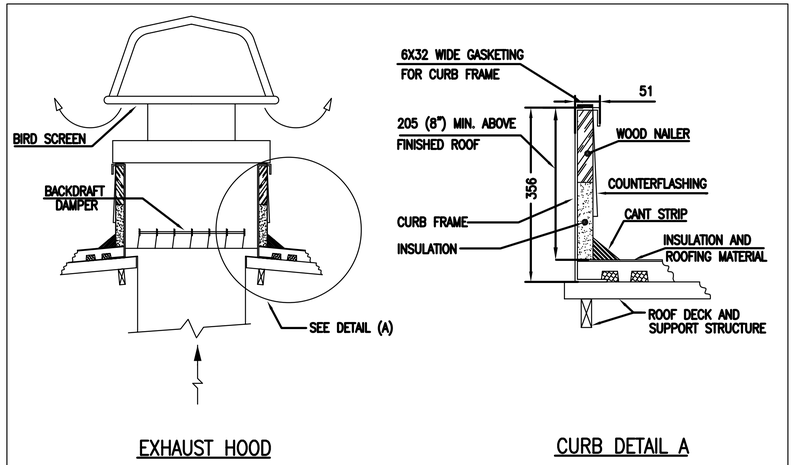

2 ROOF MOUNTED EXHAUST FAN DETAIL

SCALE: N.T.S

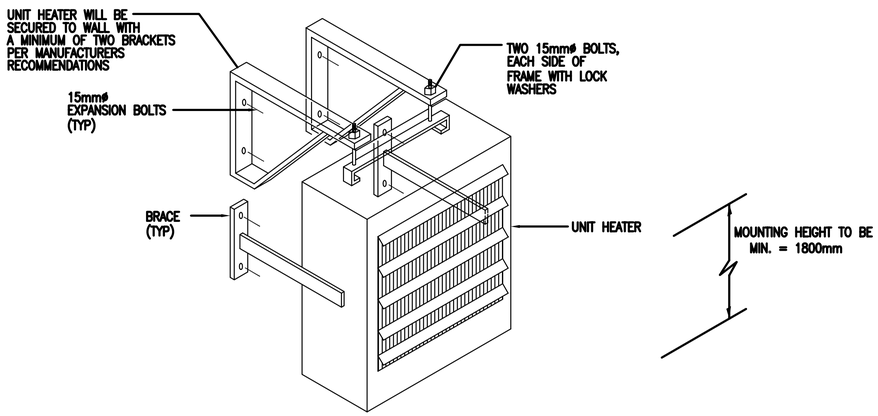

3 ELECTRIC WALL MOUNTED UNIT HEATER DETAIL

SCALE: N.T.S

UNLESS OTHERWISE NOTED, LINEAR DIMENSIONS SHOWN ARE IN MILLIMETERS.

SYMBOL	DESCRIPTION	DATE	APR

Designed By:
Date: 10 MAY 2007
Drawn By:
File No. AF0707
Checked By:
I.S.O. Sheet File Name: AF0707E-MH020N.dwg
Solicitation Number: –

US Army Corps of Engineers Transatlantic Programs Center

ANA REGIONAL BRIGADE
PAKTIKA, AFGHANISTAN
FIRE STATION
HVAC DETAILS
– –

SHEET REFERENCE NUMBER:
E-DM-01

$DATE$
$FILE$

D SIZE BORDER
32 X 20.5

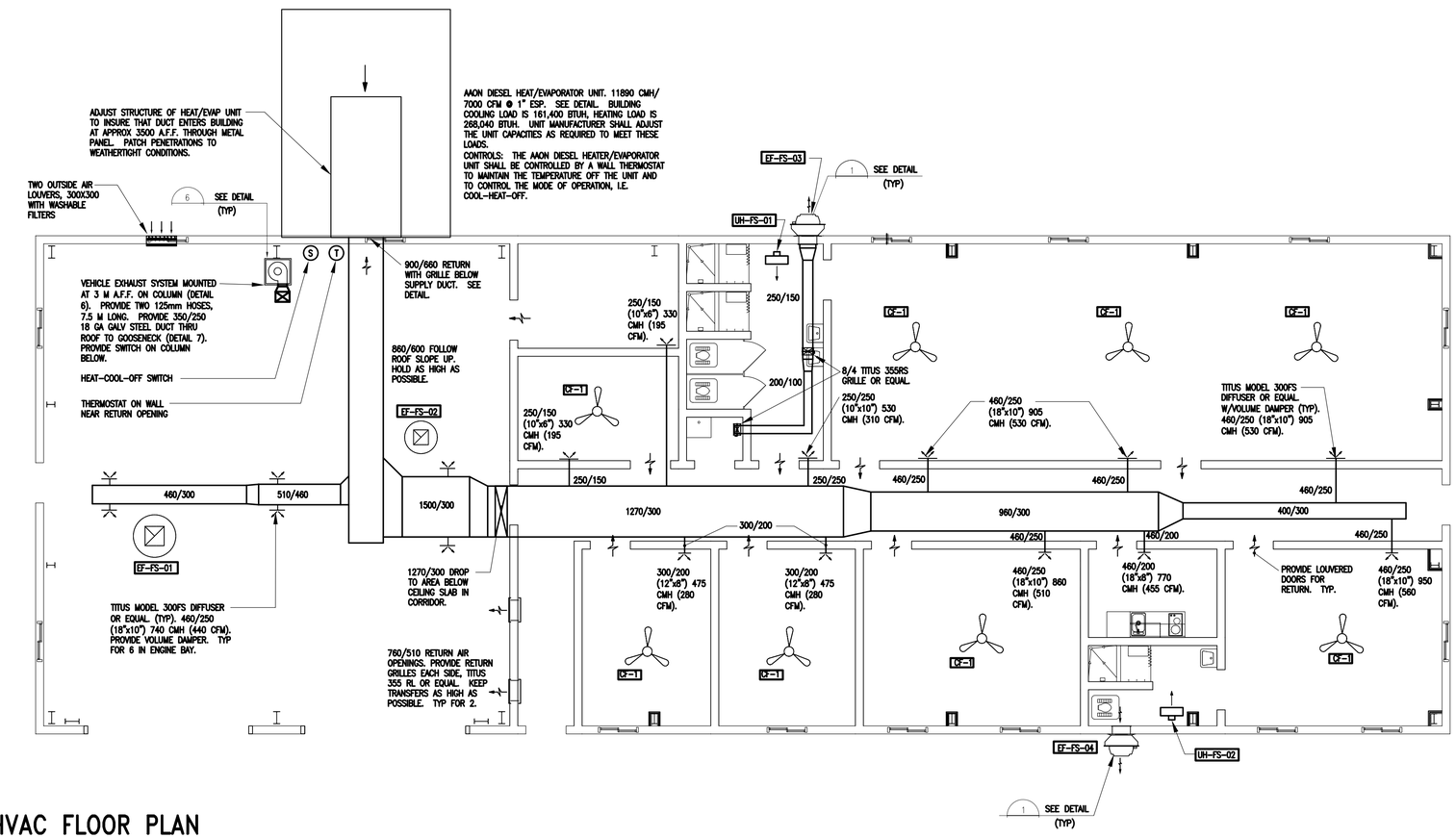

1 HVAC FLOOR PLAN

SCALE: 1:70

CEILING FAN SCHEDULE (CF)

UNIT NUMBER	TYPE (NOTE 1)	FAN DIAMETER	MAX WATTS	ELECTRICAL DATA			REMARKS
				VOLTS	PHASE	HERTZ	
CF-1	WITH LIGHT	48 in	100	220	1	50	3-SPEED

NOTES:- 1- WITH LIGHT FIXTURE - (2) 13 WATT FLOURESCENT BULBS
2- BOTTOM OF FAN MOUNTING HEIGHT = MINIMUM 2500mm A.F.F
3- PROVIDE WITH REMOTE WALL MOUNTED, SWITCH LOCATED ADJACENT TO THERMOSTAT. SWITCH TO CONTROL FAN AND LIGHTS SEPERATELY.

ELECTRIC UNIT HEATER

MARK		UH-FS-1	UH-FS-2
CAPACITY (KW)		2	2
HEATING CAPACITY TOTAL (BTUH)		6828	6828
CMH/THROW (M)		500/3	500/3
LOCATION		TOILET	TOILET
ELECTRICAL DATA	VOLTS	220	220
	PHASE	1	1
	HERTZ	50	50

REMARKS: CONTROLLED BY MANUFACTURER'S THERMOSTAT MOUNTED 1500 A.F.F. UNDER HEATER. MOUNT TOILET HEATER AS HIGH AS POSSIBLE.

EXHAUST FAN SCHEDULE (EF)

UNIT NUMBER	SERVICE	TYPE	AIR QUANTITY		MINIMUM WHEEL DIAMETER		FAN	STATIC PRESSURE		ELECTRICAL DATA				TEMP CONTROL DIAGRAM	INTERLOCK WITH	DRIVE TYPE	REMARKS
			CMH	CFM	MM	INCHES	RPM	mmH20	IN W.G.	H.P.	VOLTS	PHASE	HERTZ				
EF-FS-01	VENT	R-CTFG-GP	11893	7000	NA	NA	1000	6.35	0.25	2	220	1	50	DETAIL	EVAP	BELT	NOTES 2
EF-FS-02	VENT	R-CTFG-GP	2973	1750	NA	NA	1725	2.54	0.1	1/4	220	1	50	NONE	EVAP	DIRECT	NOTES 2
EF-FS-03	VENT	W-CTFG-GP	255	150	NA	NA	1550	2.54	0.1	1/60	220	1	50	NONE	SWITCH	DIRECT	NOTES 1, 2
EF-FS-04	VENT	W-CTFG-GP	170	100	NA	NA	1550	2.54	0.1	1/60	220	1	50	NONE	SWITCH	DIRECT	NOTES 1, 2

MANUFACTURER SHALL PROVIDE NECESSARY TRANSFORMERS ON ALL UNITS TO MEET ELECTRICAL REQUIREMENT.
NOTE 1. SUPPLIED WITH BACKDRAFT DAMPER
NOTE 2. ALL EXHAUST FANS WITH SINGLE PHASE POWER ARE TO BE PROVIDED w/ A FACTORY MOUNTED DISCONNECT SWITCH.

ROOF MOUNTED FANS TO BE PROVIDED W/ FACTORY ROOF CURB.

FAN SCHEDULE TYPE - LEGEND
(REF. EXHAUST AND SUPPLY FAN SCHEDULES)
R-CTFG-GP

R =ROOF
W =WALL
IL =INLINE
CL =CEILING

GP = GENERAL PURPOSE
EP = EXPLOSION PROOF
DB = DOWN BLAST
UB = UP BLAST
UT = UTILITY SET

CTFG = CENTRIFUGAL
PROP = PROPELLER
TUBA = TUBE AXIAL

UNLESS OTHERWISE NOTED, LINEAR DIMENSIONS SHOWN ARE IN MILLIMETERS.

SYMBOL	DESCRIPTION	DATE	APR

Designed By:
Drawn By:
Checked By:
Date: 10 MAY 2007
File No. AF0707
I.S.O. Sheet File Name: AF0707E-MH01PN.dwg
Solicitation Number: -

US Army Corps of Engineers Transatlantic Programs Center

ANA REGIONAL BRIGADE
PAKTIKA, AFGHANISTAN
FIRE STATION
HVAC PLAN
- -

SHEET REFERENCE NUMBER:
E-MH-01

$DATE$
$FILE$

D SIZE BORDER
32 X 20.5

ABBREVIATIONS

ABV. CLG	:–	ABOVE CEILING
AFF	:–	ABOVE FINISH FLOOR
AHU	:–	AIR HANDLING UNIT
AMPS	:–	AMPERES
B.D	:–	BACKDRAFT DAMPER
B.H	:–	BASE BOARD HEATER
B.M.O	:–	BELL MOUTH OPENING
BOP	:–	BOTTOM OF PIPE
BTU/H	:–	BRITISH THERMAL UNITS PER HOUR
CD	:–	CONDENSATE DRAIN
CF	:–	CEILING FAN
C.F.M	:–	CUBIC FEET PER MINUTE
C.M.H	:–	CUBIC METER PER HOUR
CONN	:–	CONNECTION
CORR	:–	CORRUGATED
CU	:–	CONDENSING UNIT
DB	:–	DRY BULB
DH	:–	DIESEL UNIT HEATER
DIA	:–	DIAMETER
D.L	:–	DOOR LOUVER
DT	:–	DAY TANK
DWG	:–	DRAWING
EF	:–	EXHAUST FAN
EL	:–	EXHAUST LOUVER
ENT	:–	ENTERING
EXH.G	:–	EXHAUST GRILLE
EXT	:–	EXTERNAL
F.A.D	:–	FRESH AIR DUCT
FD	:–	FIRE DAMPER
FLA	:–	FULL LOAD AMPERES
FOR	:–	FUEL OIL RETURN
FO	:–	FUEL OIL
FOS	:–	FUEL OIL SUPPLY
FPM	:–	FEET PER MINUTE
FT	:–	FEET
GALV	:–	GALVANIZED
HP	:–	HORSE POWER
KW	:–	KILO WATTS
LD	:–	LEAK DETECTOR
L/S	:–	LITERS PER SECOND
LT	:–	LEVEL TRANSMITTER

ABBREVIATIONS

LVG	:–	LEAVING
MRAD	:–	MOTORIZED RETURN (RECIRCULATION)
MAID	:–	MOTORIZED AIR INTAKE DAMPER
MEAD	:–	MOTORIZED EXHAUST AIR DAMPER
M.D	:–	MOTORIZED DAMPER
mm	:–	MILLIMETERS
MPS	:–	METERS PER SECOND
NC	:–	NORMALLY CLOSED
NO	:–	NORMALLY OPEN
OC	:–	ON CENTERS
OSA	:–	OUTSIDE AIR
P	:–	PUMP
PACU	:–	PACKAGE AIR CONDITIONING UNIT
P.S	:–	POWER SUPPLY
R.C.D	:–	RETURN CEILING DIFFUSER
R.D	:–	RETURN AIR DUCT
RED	:–	REDUCTION/REDUCER
R.G	:–	RETURN GRILLE
RPM	:–	REVOLUTIONS PER MINUTE
RS	:–	REFRIGERANT SUCTION
RL	:–	REFRIGERANT LIQUID
S.C.D	:–	SUPPLY CEILING DIFFUSER
S.D	:–	SUPPLY DUCT
SF	:–	SUPPLY FAN
S.G	:–	SUPPLY GRILLE
SM.D	:–	SMOKE DETECTOR
SP	:–	STATIC PRESSURE
SQ	:–	SQUARE
SR	:–	SHORT RADIUS
S.R–X	:–	SUPPLY REGISTER TYPE–X
SS	:–	STAINLESS STEEL
SU	:–	SPLIT UNIT
T	:–	SPACE THERMOSTAT
T.G	:–	TRANSFER GRILLE
TOS	:–	TOP OF SUPPORT
TYP	:–	TYPICAL
U.C	:–	UNDER CUT
UH	:–	UNIT HEATER
V.D	:–	VOLUME DAMPER
WB	:–	WET BULB
WG	:–	WATER GAGE

SYMBOLS

S	:–	SWITCH
T	:–	THERMOSTAT
T	:–	TEMPERATURE SENSOR
M	:–	MOTORIZED DAMPER
CO	:–	CARBON MONOXIDE SENSOR
	:–	CEILING FAN
	:–	THRU WALL EXHAUST FAN
	:–	BASE BOARD HEATER
	:–	UNIT HEATER
	:–	DIESEL UNIT HEATER
	:–	OUTSIDE INTAKE LOUVER
	:–	GRAVITY RIDGE VENT
	:–	EXHAUST ROOF FAN
	:–	SUPPLY ROOF FAN
	:–	SPLIT UNIT
	:–	CONDENSING UNIT
F.F.L xx	:–	FINISH FLOOR LEVEL IN (m) MEASURED FROM REFRENCE +0.00 LEVEL
	:–	SUPPLY SECTION FAN
	:–	FIRE DAMPER
	:–	VOLUME DAMPER
	:–	DOOR LOUVER
	:–	UNDER CUT

DUCTWORK

	SUPPLY AIR DIFFUSER – ARROWS INDICATE PATTERN. NO PATTERN SHOWN EQUALS 4–WAY.
	RETURN AIR GRILLE
	EXHAUST GRILLE
	SUPPLY AIR SLOT
	RETURN AIR SLOT
	ROUND DUCTWORK. DIAMETER INDICATED IN MILLIMETER
	RECTANGULAR DUCTWORK. SIZE INDICATED IN INCHES, FIRST NUMBER IS SIDE SHOWN.
	FLEXIBLE DUCT
	SUPPLY OR OUTSIDE AIR DUCT
	RETURN AIR DUCT.
	RELIEF OR EXHAUST AIR DUCT.
	90 DEGREE DUCTWORK ELBOW.
	RADIUS DUCTWORK ELBOW – ROUND OR RECTANGULAR.
	RECTANGULAR DUCTWORK BRANCH TAKE–OFF WITH 45 DEGREE BRANCH INLET.
	FLARED SPIN–IN WITH DAMPER AND FLEX DUCT (DIFFUSER CONNECTION).
	ROUND DUCT BRANCH TAKE–OFF FROM RECTANGULAR MAIN WITH CONICAL TAP.
	DUCTWORK SIZE TRANSITION.
12	DUCT PRESSURE CLASS. POINT OF CHANGE IN DUCT CONSTRUCTION.
	FLEXIBLE DUCT CONNECTION
	SUPPLY OR OUTSIDE AIR DUCT UP
	SUPPLY OR OUTSIDE AIR DUCT DOWN
	RETURN AIR DUCT UP
	RETURN AIR DUCT DOWN
	RELIEF OR EXHAUST AIR DUCT UP
	RELIEF OR EXHAUST AIR DUCT DOWN
	IN–LINE 90 DEGREE DROP (RISE) IN DUCT
UP	INCLINED RISE IN DUCT
DN	INCLINED DROP IN DUCT

NOTES:

1– ALL DIMENSIONS ARE IN MM UNLESS OTHERWISE NOTED.

2– DUCT DIMENSION INDICATES INSIDE DIMENSIONS.

3– EXACT LOCATIONS OF POWER SUPPLY POINTS, CONTROL PANEL AND MOTOR SWITCH TO BE TAKEN FROM ELECTRICAL DESIGN DRAWINGS.

4– THERMOSTAT HEIGHT IS 1525mm ABOVE F.F.L.

5– ALL EXTERIOR SUPPLY DUCTS WILL BE INSULATED WITH 50 mm THICK. MINERAL FIBER AND SHALL BE COVERED WITH METAL CLADDING.

6– ALL MENTIONED HEIGHTS ARE MEASURED FROM F.F.L.

7– INSULATE ALL THE SUPPLY DUCT WITH 50mm(2") INSULATION THICKNESS, 16kg/m³ FIBERGLASS.

EQUIPMENT IDENTIFICATION

XX–XX–XX

- UNIT NUMBER
- BUILDING ABBREVIATION
- EQUIPMENT TYPE

	TURNING VANES
	DUCT EXTRACTOR
	SPLITTER DAMPER
AD	ACCESS DOOR

UNLESS OTHERWISE NOTED, LINEAR DIMENSIONS SHOWN ARE IN MILLIMETERS.

SYMBOL	DESCRIPTION	DATE	APP.

Designed By:
Drawn By:
Checked By:
Date: 10 MAY 2007
File No. AF0707
I.S.O. Sheet File Name: AF0707E–MH01GN.dwg
Solicitation Number: –

US Army Corps of Engineers Transatlantic Programs Center

ANA REGIONAL BRIGADE
PAKTIKA, AFGHANISTAN
FIRE STATION
HVAC LEGEND
– –

SHEET REFERENCE NUMBER:
E–GM–01

$DATE$
$FILE$

D SIZE BORDER
32 X 20.5

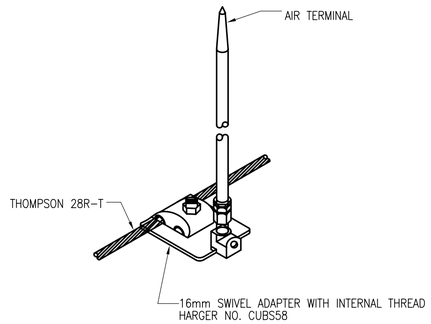

1 AIR TERMINAL MOUNTING DETAIL

SCALE: N.T.S

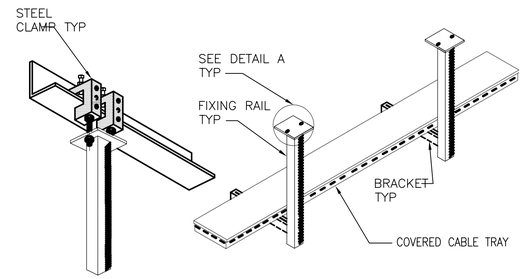

2 CABLE TRAY SUPPORT DETAIL

SCALE: N.T.S

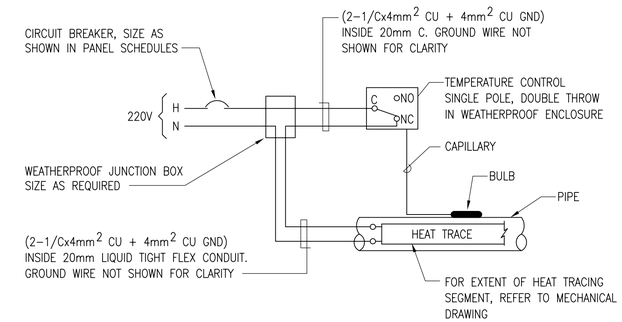

3 HEAT TRACE CONTROL DIAGRAM

SCALE: N.T.S

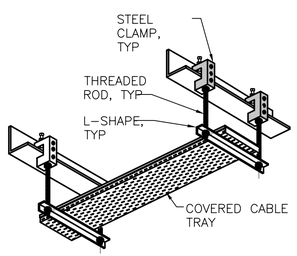

4 CABLE TRAY SUPPORT DETAIL

SCALE: N.T.S

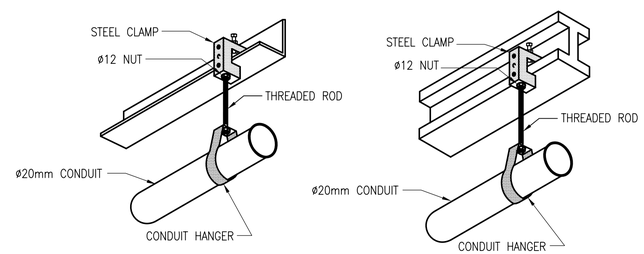

5 SUPPORT OF CONDUIT FROM STEEL STRUCTURE

SCALE: N.T.S

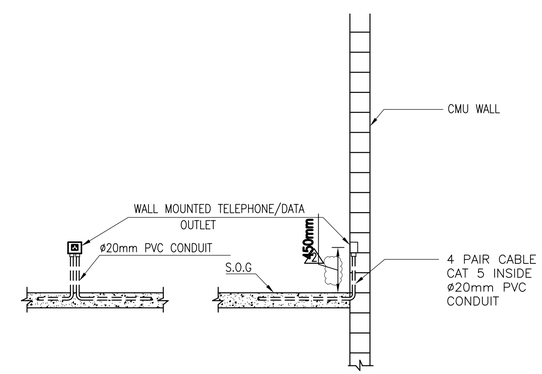

6 GENERAL INSTALLATION DETAIL FOR RECESSED TELEPHONE/ DATA OUTLET (CONDUIT EMBEDDED IN SLAB)

SCALE: N.T.S

UNLESS OTHERWISE NOTED, LINEAR DIMENSIONS SHOWN ARE IN MILLIMETERS.

SYMBOL	DESCRIPTION	DATE	APR

Designed By:
Drawn By:
Checked By:
Date: 10 MAY 2007
File No. AF0707
I.S.O. Sheet File Name: AF0707E-EL03D1.dwg
Solicitation Number: –

US Army Corps of Engineers Transatlantic Programs Center

ANA REGIONAL BRIGADE
PAKTIKA, AFGHANISTAN
FIRE STATION
ELECTRICAL DETAILS

SHEET REFERENCE NUMBER:
E-DE-03

$DATE$
$FILE$

D SIZE BORDER
32 X 20.5

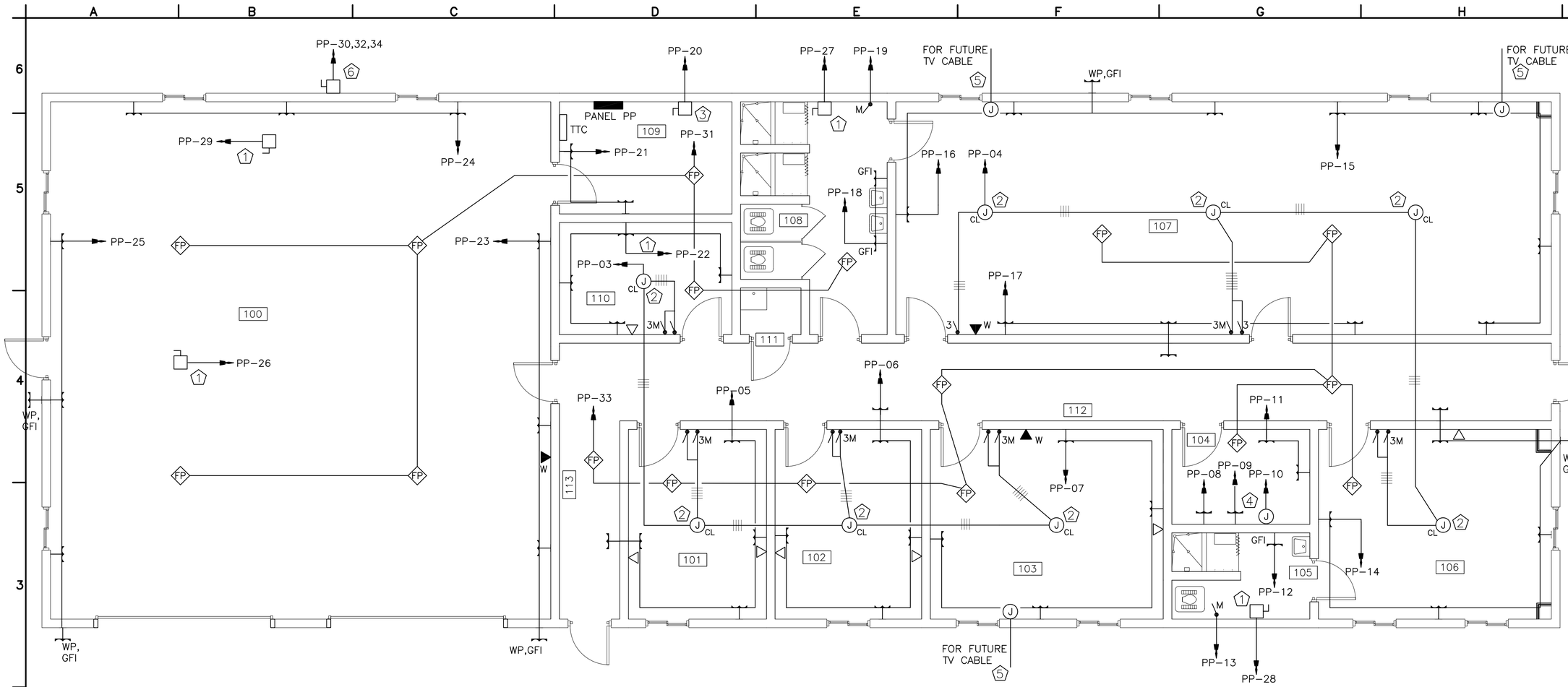

1 ELECTRICAL POWER PLAN

E-E-02 SCALE: 1:50

NOTES:

SEE E-GE-02 FOR BRANCH CIRCUITS WIRING SCHEDULE WITH CONDUIT SIZES.

1. PROVIDE 1P, 20A, 220V NONFUSED DISCONNECT IN NEMA TYPE 1 ENCLOSURE.
2. J-BOX FOR CEILING FAN/LIGHT FIXTURE. SEE MECHANICAL SCHEDULES AND DETAILS.
3. PROVIDE 1P, 40A, 220V NONFUSED DISCONNECT IN NEMA TYPE 1 ENCLOSURE.
4. CIRCUITS PP-08, PP-09, AND PP-10 ARE FOR PACKAGE KITCHEN UNIT WITH SINK, FRIDGE, MICROWAVE, AND STOVE TOP. STOVE TOP SHALL BE HARDWIRED VIA J-BOX. MOUNT RECEPTACLES AT REQUIRED HEIGHTS FOR FRIDGE AND MICROWAVE. SEE ARCHITECTURAL PLANS.
5. EXTEND 13MM CONDUIT 1.5M OUTSIDE OF BLDG., 305MM BELOW GRADE.
6. PROVIDE 3P, 20A, 380V NONFUSED DISCONNECT IN NEMA TYPE 1 ENCLOSURE.

1000 0 1000mm
SCALE: 1 = 50

UNLESS OTHERWISE NOTED, LINEAR DIMENSIONS SHOWN ARE IN MILLIMETERS.

SYMBOL	DESCRIPTION	DATE	APP.

Date: 10 MAY 2007
File No. AF0707
I.S.O. Sheet File Name: AF0707E-EL02PN.dwg
Solicitation Number: –
Designed By:
Drawn By:
Checked By:

US Army Corps of Engineers Transatlantic Programs Center

ANA REGIONAL BRIGADE
PAKTIKA, AFGHANISTAN
FIRE STATION
ELECTRICAL POWER PLAN

SHEET REFERENCE NUMBER:
E-E-02

$DATE$
$FILE$

D SIZE BORDER
32 X 20.5

LIGHTING FIXTURE SCHEDULE

TYPE	DESCRIPTION	NO. OF LAMPS	LAMP TYPE	WATTS PER LAMP	VOLTAGE	MOUNTING
A	PENDANT MOUNTED INDUSTRIAL FLUORESCENT LIGHT FIXTURE WITH WIDE DISTRIBUTION REFLECTOR KIT	2	T8	36	220/50HZ	PENDANT
A1	SURFACE MOUNTED INDUSTRIAL FLUORESCENT LIGHT FIXTURE WITH WIDE DISTRIBUTION REFLECTOR KIT	2	T8	36	220/50HZ	SURFACE
B	SURFACE/PENDANT MOUNTED PRISTMIC REFLECTOR	2	T8	36	220/50HZ	SURFACE/PENDENT
B1	SURFACE MOUNTED VIRTUALLY UNBREAKABLE DIFFUSER, SOLID STEEL BODY AND FRAME, HIGH SECURITY STAINLESS BOLTS	2	T8	36	220/50HZ	SURFACE/PENDENT
C	PENDANT MOUNTED FLUORESCENT LIGHT FIXTURE WITH REFLECTOR AND ACRYLIC LENS	4	T8	36	220/50HZ	PENDANT
C1	SURFACE MOUNTED FLUORESCENT LIGHT FIXTURE WITH REFLECTOR AND ACRYLIC LENS	4	T8	36	220/50HZ	SURFACE
D	SURFACE/PENDANT MOUNTED FIXTURE SPECIAL FOR WET LOCATION	2	T8	40	220/50HZ	SURFACE
E	SURFACE/WALL MOUNTED FIXTURE SPECIAL FOR WET LOCATION	2	T8	36	220/50HZ	SURFACE OR WALL
F	WALL MOUNTED COMPACT FLUOR.	1	CF	26	220/50HZ	WALL
G	PENDANT MOUNTED INDUSTRIAL LOW BAY FIXTURE	1	HPS	150	220/50HZ	PENDANT
G1	PENDANT MOUNTED INDUSTRIAL HIGH BAY FIXTURE	1	HPS	150	220/50HZ	PENDANT
G2	PENDANT MOUNTED INDUSTRIAL LOW BAY FIXTURE	1	HPS	250	220/50HZ	PENDANT
J	EXPLOSION PROOF SURFACE MOUNTED FLUOR. FIXTURE	2	INCLUDED	36	220/50HZ	SURFACE
X1	EXIT SIGN WITH DIRECTIONAL ARROWS AS REQUIRED	2	INCLUDED	8	220/50HZ	UNIVERSAL
X2	EMERGENCY FIXTURE WITH HALOGEN LAMPS	2	HALOGEN	20	220/50HZ	WALL/SURFACE
X3	EXPLOSION PROOF EMERGENCY FIXTURE WITH HALOGEN LAMPS	2	HALOGEN	14	220/50HZ	WALL/SURFACE

BRANCH CIRCUITS WIRE SCHEDULE

220 VOLT 1ø, 3W. CIRCUITS

CIRCUIT BREAKER	CONDUCTOR
20A–1P	2 #4mm² & 1 #4mm² GND. – 20mm C.
30A–1P	2 #6mm² & 1 #6mm² GND. – 20mm C.
40A–1P	2 #10mm² & 1 #6mm² GND. – 20mm C.
50A–1P	2 #16mm² & 1 #6mm² GND. – 25mm C.
60A–1P	2 #25mm² & 1 #10mm² GND. – 25mm C.
80A–1P	2 #35mm² & 1 #10mm² GND. – 25mm C.
100A–1P	2 #50mm² & 1 #10mm² GND. – 32mm C.

380 VOLT, 3ø, 4W. CIRCUITS

20A–3P	3 #4mm² & 1 #4mm² GND. – 20mm C.
30A–3P	3 #6mm² & 1 #6mm² GND. – 20mm C.
40A–3P	3 #10mm² & 1 #6mm² GND. – 20mm C.
50A–3P	3 #16mm² & 1 #6mm² GND. – 38mm C.
60A–3P	3 #25mm² & 1 #10mm² GND. – 38mm C.
80A–3P	3 #35mm² & 1 #10mm² GND.–38mmC.
100A–3P	3 #50mm² & 1 #10mm² GND.–40mmC.

380 VOLT, 3ø,5W. CIRCUITS

20A–3P	4 #4mm² & 1 #4mm² GND. – 20mm C.
30A–3P	4 #6mm² & 1 #6mm² GND. – 20mm C.
40A–3P	4 #10mm² & 1 #6mm² GND. – 32mm C.
50A–3P	4 #16mm² & 1 #6mm² GND. – 38mm C.
60A–3P	4 #25mm² & 1 #10mm² GND. – 38mm C.

NOTE:

1. TYPE MC CABLE SHALL INCLUDE FULL SIZE INSULATED GROUND CONDUCTOR. SIZES AS INDICATED IN SCHEDULE.

UNLESS OTHERWISE NOTED, LINEAR DIMENSIONS SHOWN ARE IN MILLIMETERS.

SYMBOL	DESCRIPTION	DATE	APP.

Designed By:
Drawn By:
Checked By:
Date: 10 MAY 2007
File No. AF0707
I.S.O. Sheet File Name: AF0707E-EL02GN.dwg
Solicitation Number: –

US Army Corps of Engineers Transatlantic Programs Center

ANA REGIONAL BRIGADE
PAKTIKA, AFGHANISTAN
FIRE STATION

ELECTRICAL
FIXTURE SCHEDULE
AND BRANCH CIRCUIT

SHEET REFERENCE NUMBER:
E–GE–02

$DATE$
$FILE$

D SIZE BORDER
32 X 20.5

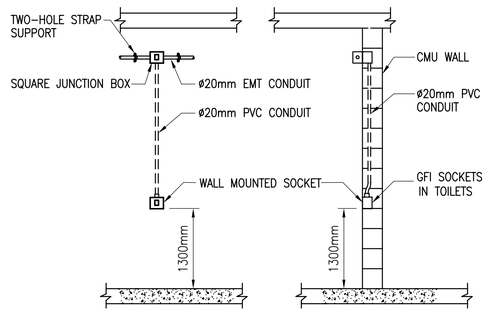

1 GENERAL INSTALLATION DETAIL FOR RECESSED SURFACE MOUNTED SOCKET IN TOILETS

SCALE: N.T.S

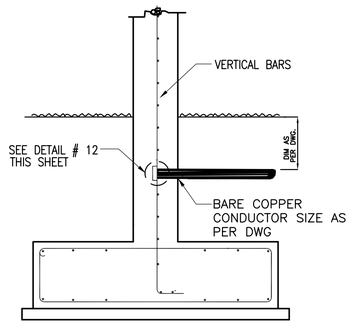

2 TYPICAL STRUCTURAL BONDING DETAIL

SCALE: N.T.S

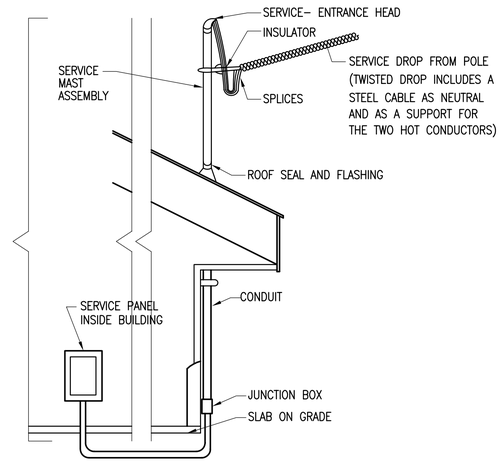

3 PANEL BOARD FEEDING FROM BOTTOM (FOR PANELS NOT IN EXTERIOR WALL)

SCALE: N.T.S.

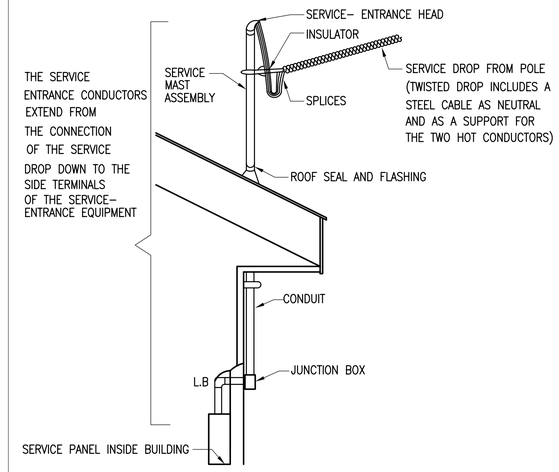

4 PANEL BOARD FEEDING FROM TOP (FOR PANELS ON EXTERLOR WALL)

SCALE: N.T.S.

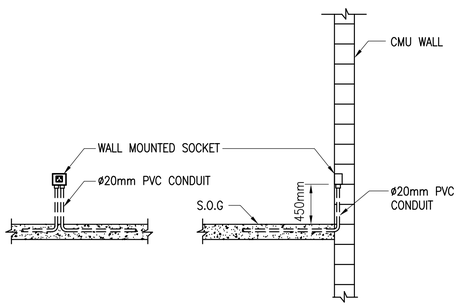

5 GENERAL INSTALLATION DETAIL FOR RECESSED SOCKET (CONDUIT EMBEDDED IN SLAB)

SCALE: N.T.S

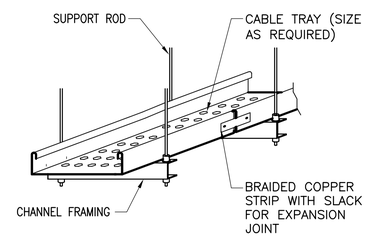

6 CABLE TRAY CROSSING EXPANSION JOINT

SCALE: N.T.S

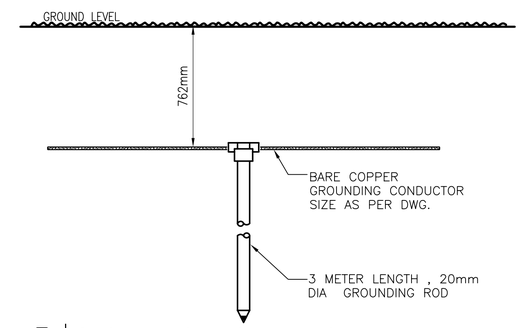

7 GROUND ROD INSTALLATION DETAIL

SCALE: N.T.S

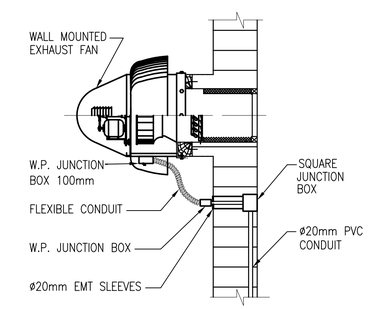

8 GENERAL INSTALLATION DETAIL FOR EXHAUST FAN (CONDUIT EMBEDDED)

SCALE: N.T.S

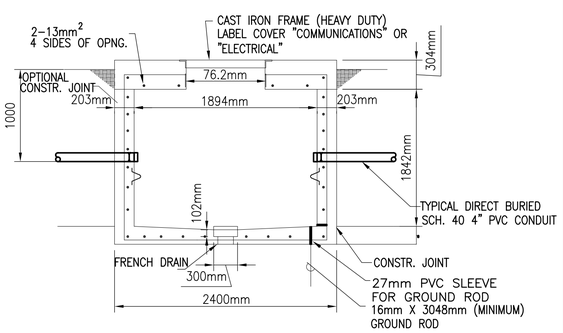

9 MANHOLE DETAIL (2400x2400mm)

SCALE: N.T.S.

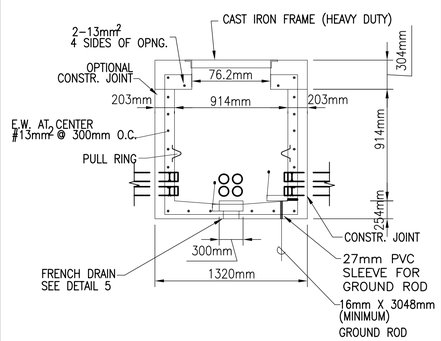

10 HAND HOLE DETAIL (1320x1320mm)

SCALE: N.T.S.

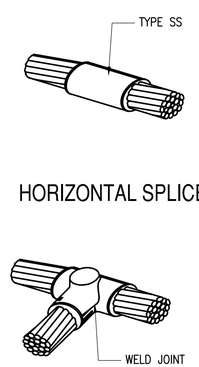

11 T-CONNECTION WELDING POINT

SCALE: N.T.S.

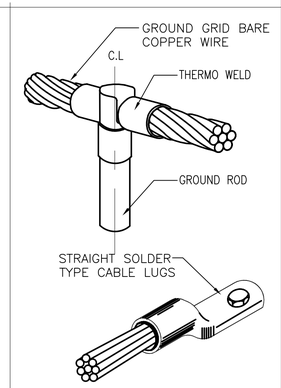

12 GROUNDING CABLE LUGS

SCALE: N.T.S.

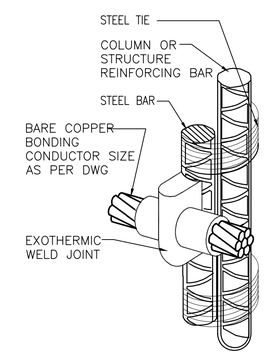

13 WELDING TO STEEL REINFORCING BAR

SCALE: N.T.S.

UNLESS OTHERWISE NOTED, LINEAR DIMENSIONS SHOWN ARE IN MILLIMETERS.

SYMBOL	DESCRIPTION	DATE	APP.

Designed By:
Date: 10 MAY 2007
Drawn By:
File No. AF0707
Checked By:
I.S.O. Sheet File Name: AF0707E-EL02D1.dwg
Solicitation Number: –

US Army Corps of Engineers Transatlantic Programs Center

ANA REGIONAL BRIGADE
PAKTIKA, AFGHANISTAN
FIRE STATION

ELECTRICAL DETAILS

SHEET REFERENCE NUMBER:
E-DE-02

$DATE$
$FILE$

D SIZE BORDER
32 X 20.5

PANEL "PP" SCHEDULE

100 AMPS MAIN CIRCUIT BREAKER 380DELTA/220 VOLTS 3 PHASE 5 WIRE 10,000 AIC

MOUNTING: SURFACE

NO	DESCRIPTION	BKR/P	VA A		VA B		VA C		BKR/P	DESCRIPTION	NO
1	LIGHTS-104,105,108,109,112,113 & E	20/1	780	1880					20/1	LIGHTS - 100 & EMERGENCY	2
3	LIGHTS/FANS - 101-103, 110	20/1			400	400			20/1	LIGHTS/FANS - 106, 107	4
5	RECEPS - 101, 113	20/1					1650	1980	20/1	RECEPS - 102, 112, & EXTERIOR	6
7	RECEPS - 103	20/1	1320	2000					20/1	RECEPS - 104 (REFRIGERATOR)	8
9	RECEPS - 104 (MICROWAVE)	20/1			1500	3520			40/1	STOVE TOP - 104	10
11	RECEPS - 104	20/1					660	330	20/1	RECEPS - 105	12
13	EXHAUST FAN - 105	20/1	220	1980					20/1	RECEPS - 106, 112, & EXTERIOR	14
15	RECEP - 107	20/1			1320	1320			20/1	RECEPS - 107 & EXTERIOR	16
17	RECEPS - 107 & 112	20/1					1320	660	20/1	RECEPS - 108	18
19	EXHAUST FAN - 108	20/1	220	6000					40/1	WATER HEATER - 109	20
21	RECEP - 109	20/1			2000	1650			20/1	RECEPS - 110, 109	22
23	RECEPS -100 & EXTERIOR	20/1					1320	990	20/1	RECEPS - 100	24
25	RECEPS -100 & EXTERIOR	20/1	1650	600					20/1	EXHAUST FANS - 100	26
27	UNIT HEATER - 108	20/1			2000	2000			20/1	UNIT HEATER - 105	28
29	VEHICLE EXHAUST SYSTEM - 100	20/1					1100	3000	20/3	DIESEL HEAT/EVAPORATOR UNIT	30
31	FIRE DETECTION	20/1	770	3000							32
33	FIRE DETECTION	20/1			1100	3000					34
35	SPLIT SYSTEM AC UNIT - 107	20/1					2900		20/1	SPARE	36
37	SPARE	20/1							20/1	SPARE	38
39	SPARE	20/1							20/1	SPARE	40
41	SPARE	20/1							20/1	SPARE	42
		TOTAL	20420		20210		15910				
CONNECTED KVA:		56.54 KVA									
CONNECTED AMPS		85.904 AMPS									

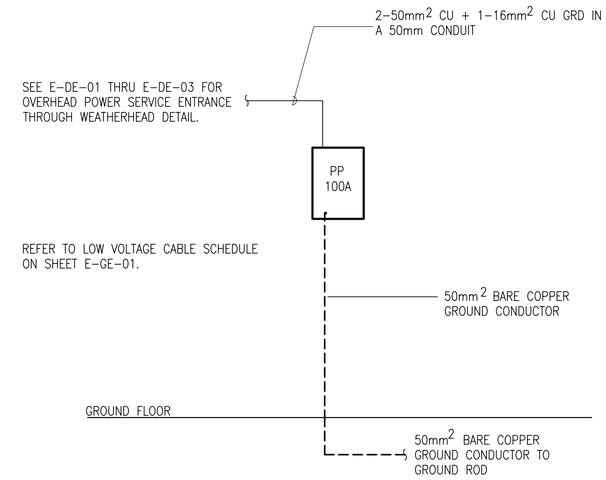

1 POWER RISER DIAGRAM

E-SE-01 SCALE: N.T.S.

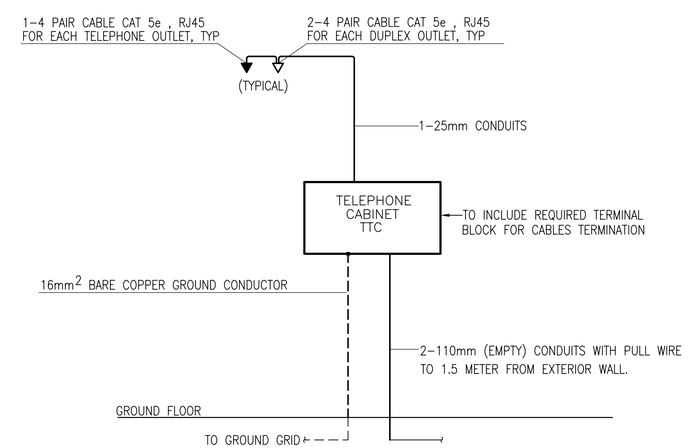

2 TELEPHONE RISER DIAGRAM

E-SE-01 SCALE: N.T.S.

UNLESS OTHERWISE NOTED, LINEAR DIMENSIONS SHOWN ARE IN MILLIMETERS.

SYMBOL	DESCRIPTION	DATE	APP.

Designed By:
Drawn By:
Checked By:
Date: 10 MAY 2007
File No. AF0707
I.S.O. Sheet File Name: AF0707E-EL01SC.dwg
Solicitation Number: –

US Army Corps of Engineers Transatlantic Programs Center

ANA REGIONAL BRIGADE
PAKTIKA, AFGHANISTAN
FIRE STATION

ELECTRICAL
PANEL SCHEDULES & RISERS

SHEET REFERENCE NUMBER:
E-SE-01

$DATE$
$FILE$

D SIZE BORDER
32 X 20.5

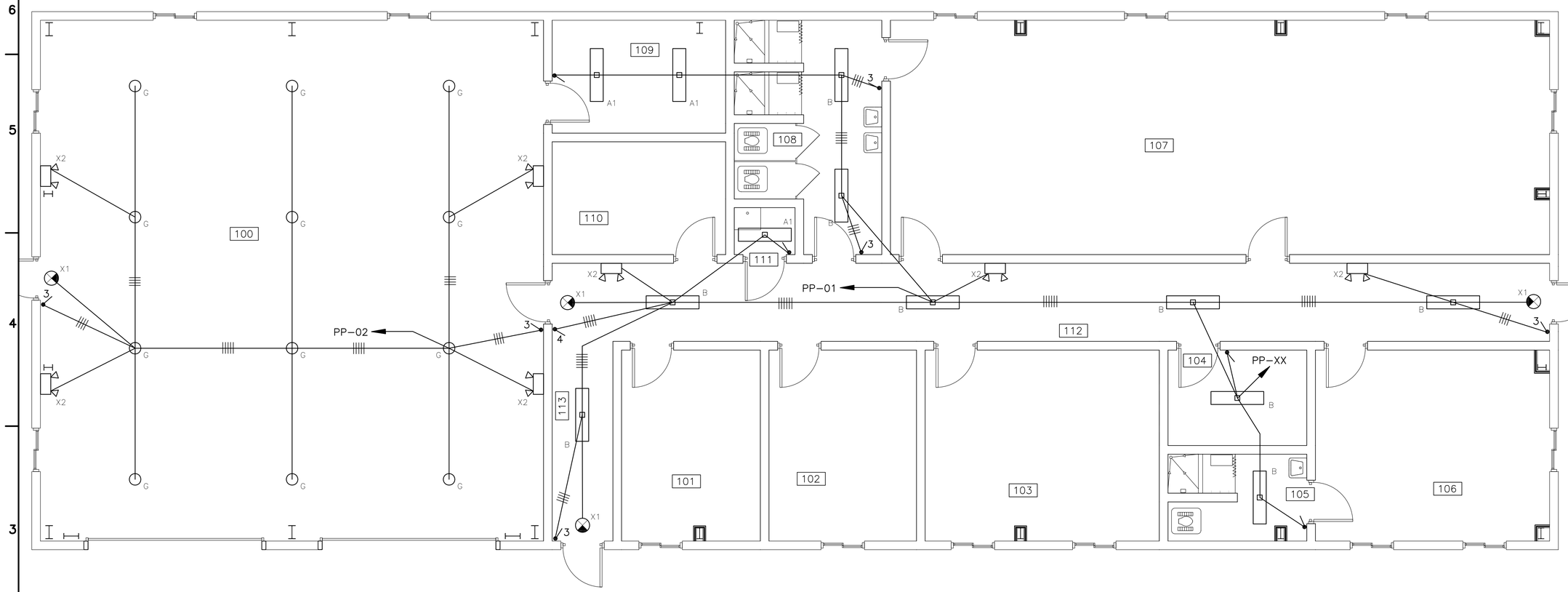

1 ELECTRICAL LIGHTING PLAN

E-E-01 SCALE: 1:50

NOTES:

ALL ROOMS WITHOUT LIGHTING FIXTURE CONTAIN A CEILING FAN WITH LIGHT FIXTURE. SEE POWER PLAN E-E-02

1000 0 1000mm

SCALE: 1 = 50

UNLESS OTHERWISE NOTED, LINEAR DIMENSIONS SHOWN ARE IN MILLIMETERS.

SYMBOL	DESCRIPTION	DATE	APP.

Date: 10 MAY 2007
File No. AF0707
I.S.O. Sheet File Name: AF0707E-EL01PN.dwg
Solicitation Number: –
Designed By:
Drawn By:
Checked By:

US Army Corps of Engineers Transatlantic Programs Center

ANA REGIONAL BRIGADE
PAKTIKA, AFGHANISTAN
FIRE STATION
ELECTRICAL LIGHTING PLAN

SHEET REFERENCE NUMBER:
E-E-01

$DATE$
$FILE$

D SIZE BORDER
32 X 20.5

LIGHTING LEGEND:

	ONE LAMP FLUORESCENT L.F.
	TWO LAMPS FLUORESCENT L.F.
	FOUR LAMPS FLUORESCENT L.F.
	FLOOD LIGHT, WALL MOUNTED
	6 METER, LIGHTING POLE WITH FLOOD LIGHT
	MIRROR WALL MOUNTED LIGHT FIXTURE
	WALL MOUNTED FIXTURE
	PENDANT MOUNTED INDUSTRIAL, LOW/HIGH BAY L.F.
X1	SURFACE (WALL/CELING)ONE FACE EXIT SIGN WITH BACK UP BATTERY.
X2	WALL MOUNTED EMERGENCY LIGHT WITH BACK UP BATTERY.
D	DIMMING SWITCH, 220V, 16AMP MOUNTED HEIGHT = 1300mm ABOVE FINISH FLOOR LEVEL FROM THE CENTER OF SWITCH
	ONE WAY SWITCH, 220V, 16AMP MOUNTED HEIGHT = 1300mm ABOVE FINISH FLOOR LEVEL FROM THE CENTER OF SWITCH
3	3 WAY SWITCH, 220V, 16AMP MOUNTED HEIGHT = 1300mm ABOVE FINISH FLOOR LEVEL FROM THE CENTER OF SWITCH
4	4 WAY SWITCH, 220V, 16AMP MOUNTED HEIGHT = 1300mm ABOVE FINISH FLOOR LEVEL FROM THE CENTER OF SWITCH

LOW CURRENT LEGEND:

TTC	TELEPHONE TERMINAL CABINET, SEE NOTE 3
	EQUIPMENT AS IDENTIFIED ON PLANS
	TELPHONE/DATA OUTLET DUPLEX, RJ-45, 4 PAIR CATEGORY 5E, SEE NOTE 2 & 5
FP	FIRE ALARM BOX FOR FUTURE INSTALLATION OF SELF SMOKE DETECTOR. LOCATE BOX A MIN. OF 1.0M FROM TIP OF FAN BLADE.
	TELEPHONE OUTLET ,RJ-45,4 PAIR CATEGORY 5E, SEE NOTE #2, 5

GROUNDING LEGEND:

	3 METER LENGTH, 0.02m DIAMETER , COPPER GROUNDING ROD
	UNDERGROUND BARE COPPER CONDUCTOR FOR CONNECTION BETWEEN GROUNDING RODS SIZE AS INDICATED ON THE PLAN
T	T-SPLICE EXOTHERMIC WELD
	AIR TERMINAL

POWER LEGEND:

	ELECTRICAL PANEL BOARD, SEE NOTE 4
MDP	MAIN DISTRIBUTION PANEL (MDP)
	NON FUSED DISCONNECT SWITCH ,220V ,50HZ ,20A (U.O.N)
	COMBINATION MOTOR STARTER SWITCH ,220V ,50HZ ,20A (U.O.N)
M	MANUAL MOTOR STARTER, WITH OVER LOAD PROTECTION RATING AS REQUIRED BY EXHAUST FAN MANUFACTURER MOUNTED HEIGHT = 1300mm ABOVE FINISH FLOOR LEVEL
3M	MOTOR RATED 3-SPEED SWITCH FOR CEILING FAN, 220V, 20AMP MOUNTED HEIGHT = 1300mm ABOVE FINISH FLOOR LEVEL
	RECESSED MOUNTED DUPLEX RECEPTACLES 1PH, 240V, 16A, 50HZ GROUNDING DIN TYPE. MOUNTING HEIGHT = 450mm ABOVE FINISH FLOOR LEVEL
GFI	RECESSED MOUNTED SINGLE RECEPTACLES 1PH, 240V, 16A, 50HZ GROUNDING DIN TYPE WITH GROUND FAULT INTERRUPTER AND SWITCH. MOUNTING HEIGHT =1300mm ABOVE FINISH FLOOR
CEE	RECESSED MOUNTED DUPLEX RECEPTACLES 3PH, 380V, 30A, 50HZ GROUNDING DIN TYPE MOUNTING HEIGHT =450mm ABOVE FINISH FLOOR
G	RECESSED MOUNTED DUPLEX RECEPTACLE LABEL INDICATE (HOSPITAL GRAD) 1PH, 240V, 16A, 50HZ GROUNDING DIN TYPE . MOUNTING HEIGHT =500mm ABOVE FINISH FLOOR INSULATED 4mm GROUNDING WIRE PER EACH RECEPTACLE
	SINGLE POWER SOCKET OUTLET, 220V, 50HZ, 20A MOUNTING HEIGHT = 450mm (U.O.N.)
PB	100mm x 100mm PULL BOX.
J	100mm x 100mm JUNCTION BOX
J CL	JUNCTION BOX FOR CEILING FAN WITH LIGHTS, SEE MECH STD. DETAILS
C.B	CIRCUIT BREAKER 30 AMP , 3 POLE , 380V , 50HZ
M	MOTORIZE DAMPER
REL	RELAY PANEL
M	MOTOR
H	HEATER
B XX-E-01	DETAIL DESIGNATION, TOP NUMBER INDICATE DETAIL NUMBER, BOTTOM LETTER INDICATES SHEET REF. NUMBER.

LIGHT FIXTURE NOTES:

1. ALL PENDANT MOUNTED FIXTURES ARE TO INCLUDE MANUFACTURERS "BALL-HANGER" TYPE CANOPY TO COMPENSATE FOR ROOF PITCH. FIELD CUT TO LENGTH.
2. ALL LIGHTING FIXTURES TO BE PROVIDED WITH "STANDARD" HIGH POWER FACTOR "ELECTRONIC" BALLASTS, UNLESS NOTED OTHERWISE.

LINE TYPE:

- - - - - - -	EXPOSED CONDUIT
————————	EMBEDDED OR CONCEALED CONDUIT
- - - -|- - - -	LIGHTNING PROTECTION CONDUCTOR

ABBREVIATIONS:

A	AMP
A.H.U.	AIR HANDLING UNIT
A/C	AIR CONDITIONING
A.C.U.	AIR CONDITION UNIT
A.F.F.	ABOVE FINNISH FLOOR LEVEL
C	CONDUIT
CB	CIRCUIT BREAKER
CHH	COMMUNICATION HANDHOLE
C.L.	CENTERLINE
C.O.E.	CORE OF ENGINEERS
CU	CONDENSING UNIT
ø, DIA	DIAMETER
EF	EXHAUST FAN
EHH	ELECTRICAL HANDHOLE
EMT	ELECTRIC METALLIC TUBING
EWH	ELECTRICAL WATER HEATER
FACP	FIRE ALARM CONTROL PANEL
GFI	GROUND FAULT INTERRUPTER
GRS	GALVANIZED RIGID STEEL
HZ	HERTZ
IR	IMPULSE RELAY
IL	INVERTED LEVEL
UTP	UNSHIELDED TWISTED PAIR
N.F.D.S	NON FUSED DISCONNECT SWITCH
L.C.	LIGHTING CONTACTOR
L.F.	LIGHT FIXTURE
LPI	LIGHTNING PROTECTION INSTITUTE
M	METER
MAX	MAXIMUM
MD	MOTORIZE DAMPER
MECH	MECHANICAL
MLO	MAIN LUGS ONLY
mm	MILLIMETER
P.A.C.U.	PACKAGE AIR CONDITION UNIT
PVC	POLYVINYL CHLORIDE
RM	ROOM
SF	SUPPLY FAN
S.U.	SPLIT UNIT
TRANS	TRANSFORMER
TTC	TELEPHONE TERMINAL CABINET
TYP	TYPICAL
TV	TELEVISION
U.O.N.	UNLESS OTHERWISE NOTED
V	VOLT
W	WATT
WP	WEATHER PROOF
WR	WELDING RECEPTACLE
RP	RECALCULATION PUMP

GENERAL NOTES:

1. MOUNTING HEIGHT OF SWITCHES 1.3M AFF UNLESS OTHERWISE NOTED.
2. MOUNT RECEPTACLES AND TELPHONE/DATA OUTLETS 450mm AFF UNLESS OTHERWISE NOTED. W=MOUNT 1.4M AFF.
3. MOUNT TELEPHONE TERMINAL CABINET (TTC) 1800mm FROM THE TOP OF CABINET TO FLOOR.
4. MOUNT ELECTRICAL PANELS 1800mm A.F.F. TO THE TOP OF THE PANEL.
5. TELEPHONE/DATA CABLE SHALL BE CAT 5E, 4 PAIRS
6. FOR EXACT LOCATION OF MECHANICAL EQUIPMENT REFER TO MECHANICAL DESIGN DRAWINGS.
7. EQUIPMENT SHALL BE RATED FOR 40 DEGREES C AND 2000 METERS (ABOVE SEA LEVEL) ELEVATION
8. THE GROUNDING RESISTANCE SHALL BE NO HIGHER THAN 25 OHMS , EXCEPT IN THE UPS AND EQUIPMENT ROOM SHALL BE 5 OHMS MEASURED MIN OF 48 HRS AFTER RAINFALL, ADDITIONAL RODS SHOULD BE USED TO ACHIEAVED THE REQUIRED RESISTANCE
9. ALL LIGHT FIXTURES SHALL BE SEISMICALLY BRACED.
10. ALL PANEL BOARD AIC RATINGS AS SHOWN ON SCHEDULES.
11. THE ELECTRICAL WIRING SHOWN ON PLAN DRAWINGS IS DIAGRAMMATIC AND INTENDED TO IDENTIFY THE CIRCUIT ARRANGEMENT FOR EACH AREA. THE CONDUIT CAN BE COMBINED FOR DIFFERENT CIRCUITS, PROVIDED THE INSTALLATION MEETS THE NEC, WITH NO MORE THAN 3 CONNECTIVE CIRCUITS IN ANY CONDUIT, SUCH AS 1, 3, 5 OR 2, 4, 6, ETC. THE 3 CIRCUITS CAN SHARE ONE NEUTRAL CONDUCTOR.

UNLESS OTHERWISE NOTED, LINEAR DIMENSIONS SHOWN ARE IN MILLIMETERS.

SYMBOL	DESCRIPTION	DATE	APP.

Designed By:
Date: 10 MAY 2007
Drawn By:
File No. AF0707
Checked By:
I.S.O. Sheet File Name: AF0707E-EL01GN.dwg
Solicitation Number: –

US Army Corps of Engineers Transatlantic Programs Center

ANA REGIONAL BRIGADE
PAKTIKA, AFGHANISTAN
FIRE STATION

ELECTRICAL
LEGEND AND NOTES

SHEET REFERENCE NUMBER:
E-GE-01

$DATE$
$FILE$

D SIZE BORDER
32 X 20.5

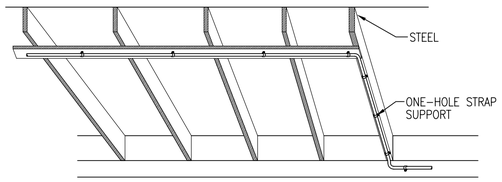

1 SURFACE MOUNTED CONDUIT SUPPORT

SCALE: N.T.S

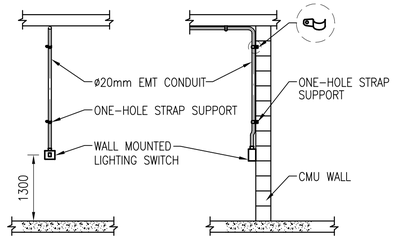

NOTE:-
WALL MOUNTED LIGHTING OUTLETS SHOULD BE CENTRAL ON A BLOCK, NOT BETWEEN TWO BLOCKS.

2 GENERAL INSTALLATION DETAIL FOR LIGHTING SWITCH (CONDUIT EXPOSED)

SCALE: N.T.S

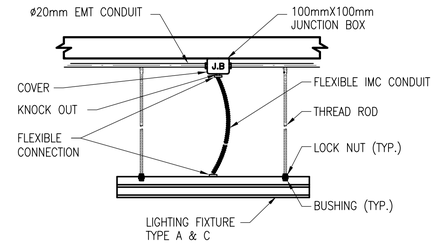

3 PENDANT LIGHT FIXTURE DETAIL (NOT USED)

SCALE: N.T.S

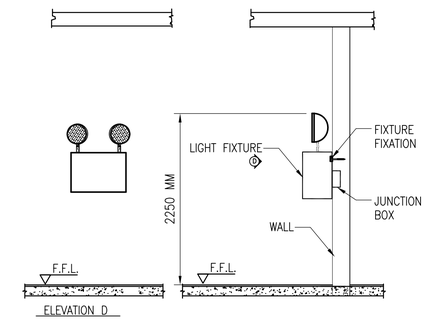

4 SURFACE EMERGENCY LIGHT FIXTURE DETAIL

SCALE: N.T.S

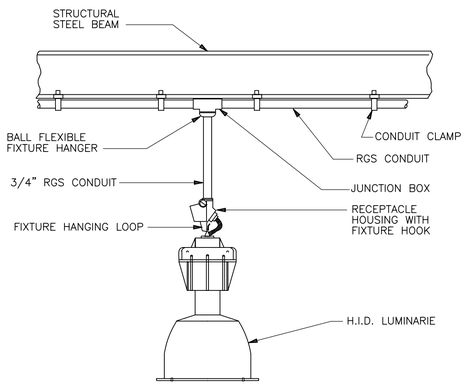

5 H.I.D. LUMINARIE PENDANT MOUNTED

SCALE: N.T.S

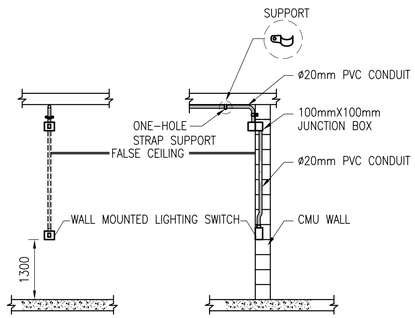

6 GENERAL INSTALLATION DETAIL FOR LIGHT SWITCH (CONDUIT CONCEALED)

SCALE: N.T.S

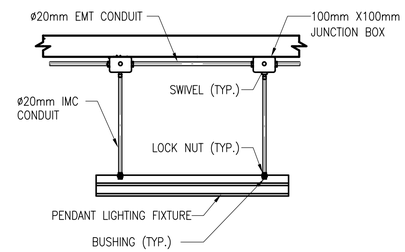

7 INSTALLATION OF LIGHTING FIXTURE IN SEISMIC BUILDING

SCALE: N.T.S

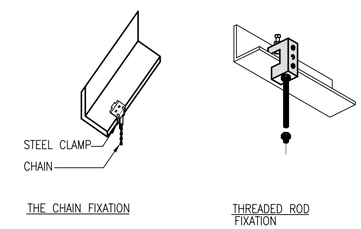

8 GENERAL SUPPORT DETAIL

SCALE: N.T.S

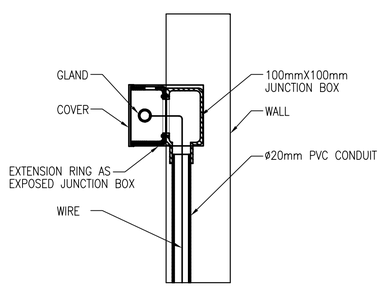

9 CONVERTING FROM EXPOSED TO EMBEDDED ROUTING IN WALL

SCALE: N.T.S

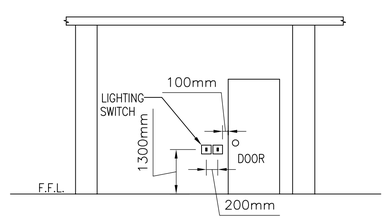

NOTE:-
THE LOCATION OF THE CONDUIT FEEDING THE FIRST SWITCH TO BE 100mm FROM THE DOOR OPENING

10 LIGHT SWITCH MOUNTING

SCALE: N.T.S

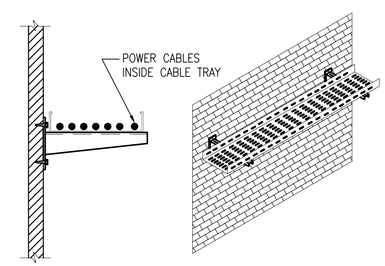

11 GENERAL INSTALLATION DETAIL FOR WALL MOUNTED CABLE TRAY

SCALE: N.T.S

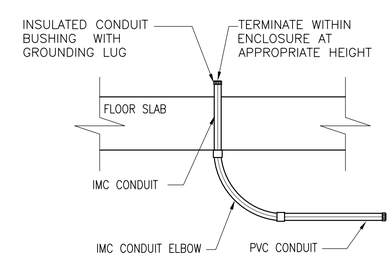

12 TYPICAL CONDUIT STUB-UP THROUGH FLOOR SLAB FOR FEEDING EQUIPMENT

SCALE: N.T.S

UNLESS OTHERWISE NOTED, LINEAR DIMENSIONS SHOWN ARE IN MILLIMETERS.

SYMBOL	DESCRIPTION	DATE	APP.

Designed By:
Date: 10 MAY 2007
Drawn By:
File No. AF0707
Checked By:
I.S.O. Sheet File Name: AF0707E-EL01D1.dwg
Solicitation Number: –

US Army Corps of Engineers Transatlantic Programs Center

ANA REGIONAL BRIGADE
PAKTIKA, AFGHANISTAN
FIRE STATION

ELECTRICAL DETAILS

SHEET REFERENCE NUMBER:
E-DE-01

$DATE$
$FILE$

D SIZE BORDER
32 X 20.5

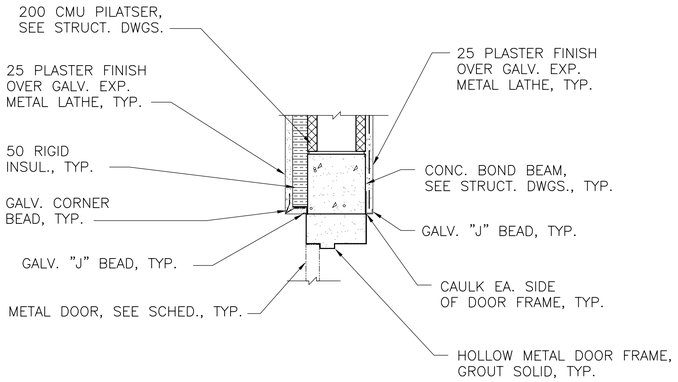

1 DETAIL - EXTERIOR DOOR HEAD

E-A-01 REF. SCALE: 1:10

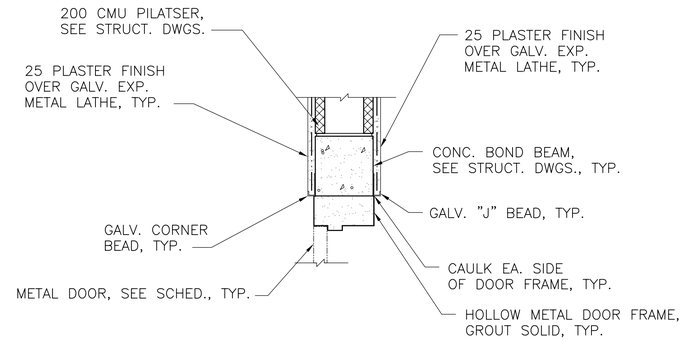

4 DETAIL - INTERIOR DOOR HEAD

E-A-01 REF. SCALE: 1:10

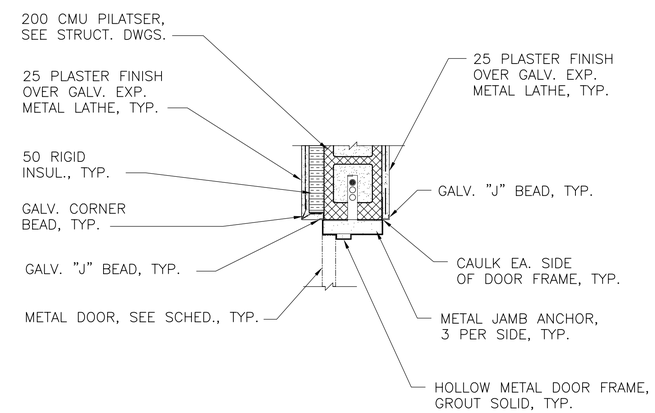

2 DETAIL - EXTERIOR DOOR JAMB

E-A-01 REF. SCALE: 1:10

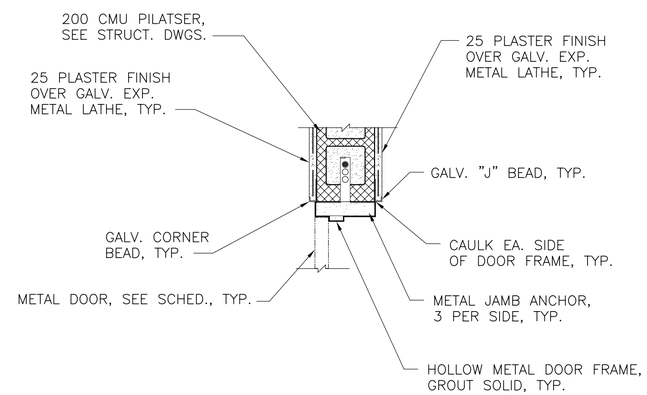

5 DETAIL - INTERIOR DOOR JAMB

E-A-01 REF. SCALE: 1:10

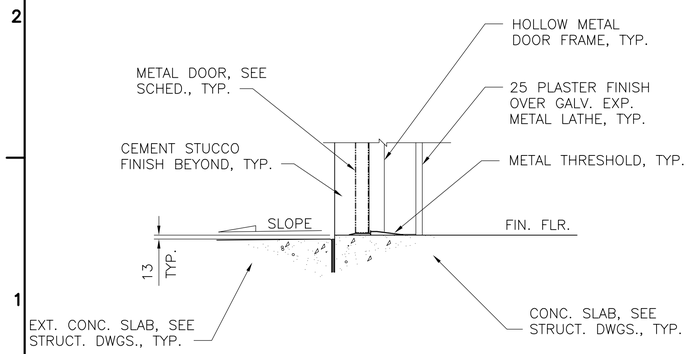

3 DETAIL - EXTERIOR DOOR SILL

E-A-01 REF. SCALE: 1:10

GRAPHIC SCALE:

200 0 200mm
SCALE: 1 = 10

UNLESS OTHERWISE NOTED, LINEAR DIMENSIONS SHOWN ARE IN MILLIMETERS.

SYMBOL	DESCRIPTION	DATE	APP.

Designed By: T. WALLACE
Date: 10 MAY 2007
Drawn By: T. WALLACE
File No. AF0707
Checked By: R. BROWN
I.S.O. Sheet File Name: AF0707E-AR12DT.dwg
B. THOMAS
Solicitation Number: –

US Army Corps of Engineers Transatlantic Programs Center

ANA REGIONAL BRIGADE
PAKTIKA, AFGHANISTAN
FIRE STATION

DOOR DETAILS

SHEET REFERENCE NUMBER:
E-A-12

D SIZE BORDER
32 X 20.5

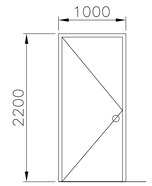

1 DOOR (D1)
SCALE: 1:40

1A DOOR (D1A) 20–MIN. FIRE RATED
SCALE: 1:40

1B DOOR (D1B) 45–MIN. FIRE RATED
SCALE: 1:40

1C DOOR (D1C) INSULATED
SCALE: 1:40

1D DOOR (D1D) 90–MIN. FIRE RATED
SCALE: 1:40

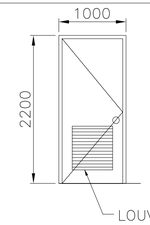

2 DOOR (D2)
SCALE: 1:40

2A DOOR (D2A) 20–MIN. FIRE RATED
SCALE: 1:40

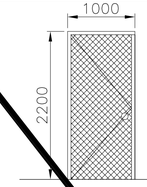

3 DOOR (D3)
SCALE: 1:40

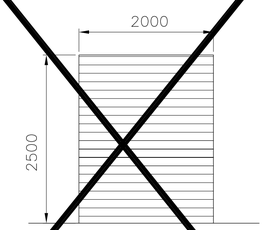

4 DOOR (D4)
SCALE: 1:40

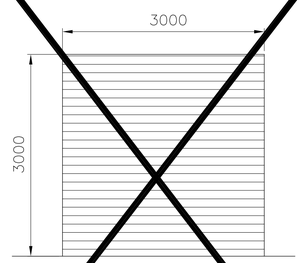

5 DOOR (D5)
SCALE: 1:40

5A DOOR (D5A)
SCALE: 1:40

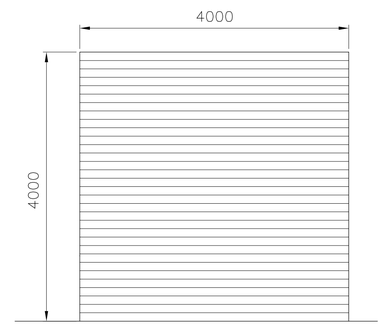

6 DOOR (D6)
SCALE: 1:40

6A DOOR (D6A)
SCALE: 1:40

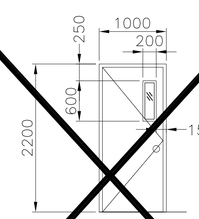

7 DOOR (D7)
SCALE: 1:40

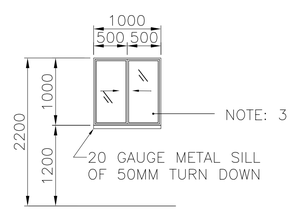

8 WINDOW (W1)
SCALE: 1:40

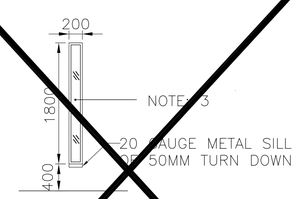

9 WINDOW (W2)
SCALE: 1:40

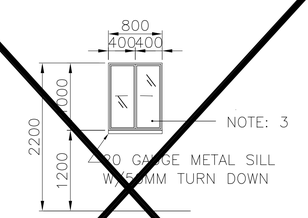

10 WINDOW (W3)
SCALE: 1:40

DOOR SCHEDULE

DOOR NO.	DIMENSION WIDTH	DIMENSION HEIGHT	PANEL NUMBER	OPENING SYSTEM	HDWR. NO.	MATERIAL
D1	1000	2200	1	HINGED	–	HM DOOR IN HM FRAME
~~D1A~~	~~1000~~	~~2200~~	~~1~~	~~HINGED~~		HM DOOR IN HM FRAME; 20 MIN FIRE RATED
D1B	1000	2200	1	HINGED	–	HM DOOR IN HM FRAME; 45 MIN FIRE RATED
D1C	1000	2200	1	HINGED	–	HM DOOR IN HM FRAME; INSULATED
D1D	1000	2200	1	HINGED	–	HM DOOR IN HM FRAME; 90 MIN FIRE RATED
D2	3000	3000	1	HINGED	–	HM DOOR IN HM FRAME W/ LOUVER
~~D2A~~	~~3000~~	~~4000~~	~~1~~	~~HINGED~~		HM DOOR IN HM FRAME W/ FIRE DAMPER FUSIBLE LINK LOUVER 20 MIN FIRE RATED
~~D3~~	~~1000~~	~~2200~~	~~1~~	~~HINGED~~		WELDED WIRE MESH IN STEEL FRAME
~~D4~~	~~2000~~	~~2500~~	~~1~~	~~ROLL-UP~~		STEEL DOOR & FRAM, MANUALLY OPERATED, INSULATED
~~D5~~	~~3000~~	~~3000~~	~~1~~	~~ROLL-UP~~		STEEL DOOR & FRAM, MANUALLY OPERATED, INSULATED
~~D5A~~	~~3000~~	~~3000~~	~~1~~	~~ROLL-UP~~		STEEL DOOR & FRAM, MANUALLY OPERATED, UNINSULATED
D6	4000	4000	1	ROLL-UP	–	STEEL DOOR & FRAM, MANUALLY OPERATED, INSULATED
~~D6A~~	~~4000~~	~~4000~~	~~1~~	~~ROLL-UP~~		STEEL DOOR & FRAM, MANUALLY OPERATED, INSULATED
~~D7~~	~~1000~~	~~2200~~	~~1~~	~~HINGED~~		HM DOOR IN HM FRAME W/ LAMINATED GLAZING

WINDOW SCHEDULE

WINDOW NUMBER	DIMENSION WIDTH	DIMENSION HEIGHT	DIMENSION SILL HEIGHT	PANEL NUMBER	OPENING SYSTEM	DESCRIPTION
W1	1000	1000	1700	2	SLIDING	ALUM. PANELS W/TRANSPARENT 6MM GLASS METAL SILL AND FIXED INSECT METAL SCREEN
~~W2~~	~~200~~	~~1800~~	~~400~~	~~1~~	~~FIXED~~	~~ALUM. PANELS W/6MM WIRE GLASS~~
~~W3~~	~~800~~	~~1000~~	~~1700~~	~~2~~	~~SLIDING~~	~~ALUM. PANELS W/TRANSPARENT 6MM GLASS METAL SILL AND FIXED INSECT METAL SCREEN~~

NOTES:

1. FOR HARDWARE SET DESCRIPTION SEE SPECIFICATIONS SECTION.
2. ITEMS BLOCKED OUT, OR LINED THROUGH, DO NOT APPLY TO THIS FACILITY.
3. ALL GLAZING SHALL BE LAMINATED.

GRAPHIC SCALE:

200 0 200mm
SCALE: 1 = 10

UNLESS OTHERWISE NOTED, LINEAR DIMENSIONS SHOWN ARE IN MILLIMETERS.

SYMBOL	DESCRIPTION	DATE	APR

Designed By: T. WALLACE
Drawn By: T. WALLACE
Checked By: R. BROWN
B. THOMAS
Date: 10 MAY 2007
File No. AF0707
I.S.O. Sheet File Name: AF0707CA–AR11SC.dwg
Solicitation Number: –

US Army Corps of Engineers Transatlantic Programs Center

ANA REGIONAL BRIGADE
PAKTIKA, AFGHANISTAN
FIRE STATION

DOOR & WINDOW SCHEDULE

SHEET REFERENCE NUMBER:
E–A–11

$DATE$
$FILE$

D SIZE BORDER
32 X 20.5

FINISH SCHEDULE

ROOM NO.	ROOM NAME	FLOOR	CEILING	INTERIOR WALLS				REMARKS
				NORTH	EAST	SOUTH	WEST	
100	PARKING BAY	F2	–	W3	W3	W3	W3	–
101	OFFICE	F1	C1	W1	W1	W1	W1	–
102	CLASSROOM	F1	C1	W1	W1	W1	W1	–
103	DINING AREA	F1	C1	W1	W1	W1	W1	–
104	KITCHEN	F1	C1	W1	W1	W1	W1	–
105	TOILET/SHOWER	F1	C1	W2	W2	W2	W2	–
106	SLEEPING AREA	F1	C1	W1	W1	W1	W1	–
107	SLEEPING AREA	F1	C1	W1	W1	W1	W1	–
108	TOILET/SHOWER	F1	C1	W2	W2	W2	W2	–
109	STORAGE	F2	C2	W3	W3	W3	W3	–
110	OFFICE	F1	C1	W1	W1	W1	W1	–
111	JANITOR	F2	C2	W3	W3	W3	W3	–
112	CORRIDOR	F1	C1	W1	W1	W1	W1	–
113	CORRIDOR	F1	C1	W1	W1	W1	W1	–

FINISHING SCHEDULE LEGEND

FLOOR	
F1	TERRAZO TILE
F2	SEALED CONCRETE
WALL	
W1	CMU W/ PAINTED PLASTER
W2	CERAMIC TILE
W3	PAINTED CMU
CEILING	
C1	PAINTED 25 MM PLASTER
C2	PAINTED EXPOSED PLYWOOD
C3	PAINTED EXPOSED STRUCTURE
WALL SYMBOLS:	
	CMU WALL
CJ	CONTROL JOINT

NOTES:

1– ALL WALLS ARE 200MM THK. CMU UNLESS NOTED OTHERWISE.

2– ALL WALLS TERMINATE AT CEILING UNLESS NOTED OTHERWISE. REF. STRUCT. DRWGS.

3– ALL DOOR JAMBS ARE 200MM UNLESS OTHERWISE NOTED.

4– ALL DIMENSIONS ARE TO FACE OF CMU UNLESS NOTED OTHERWISE.

5– ALL VERTICAL DIMENSIONS & LEVELS ARE FROM GROUND FLOOR FINISHED SLAB. THIS ELEVATION IS +0000.

6– OPEN

7– SEE STRUCTURAL DRAWINGS FOR LOCATION OF BUILDING CONTROL, EXPANSION AND SEISMIC JOINTS.

8– ALL HVAC OPENINGS DIMENSION SHALL BE VERIFIED WITH APPROVED SUBMITTALS.

9– ALL EXPOSED PURLINS, COLUMNS, FRAMES, AND GIRTS SHALL BE PAINTED.

SYMBOL	DESCRIPTION	DATE	APR

Designed By: T. WALLACE
Date: 10 MAY 2007
Drawn By: T. WALLACE
File No. AF0707
Checked By: R. BROWN
I.S.O. Sheet File Name: AF0707E–AR10SC.dwg
B. THOMAS
Solicitation Number: –

US Army Corps of Engineers Transatlantic Programs Center

ANA REGIONAL BRIGADE
PAKTIKA, AFGHANISTAN
FIRE STATION
SCHEDULE

SHEET REFERENCE NUMBER:
E–A–10

GRAPHIC SCALE:
200 0 200mm
SCALE: 1 = 10

UNLESS OTHERWISE NOTED, LINEAR DIMENSIONS SHOWN ARE IN MILLIMETERS.

$DATE$
$FILE$

D SIZE BORDER
32 X 20.5

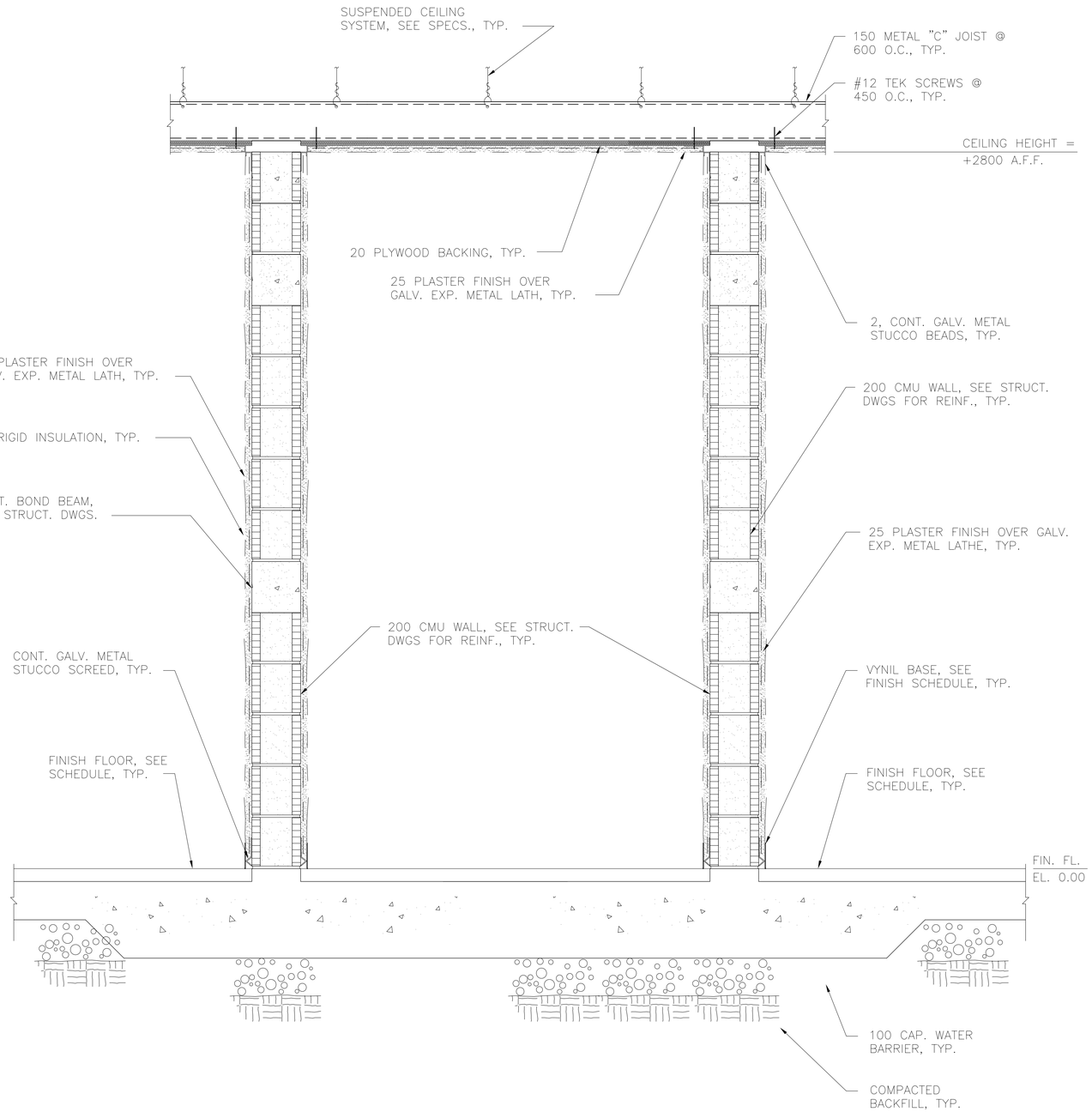

A SECTION

E-A-01 | REF. | SCALE: 1:10

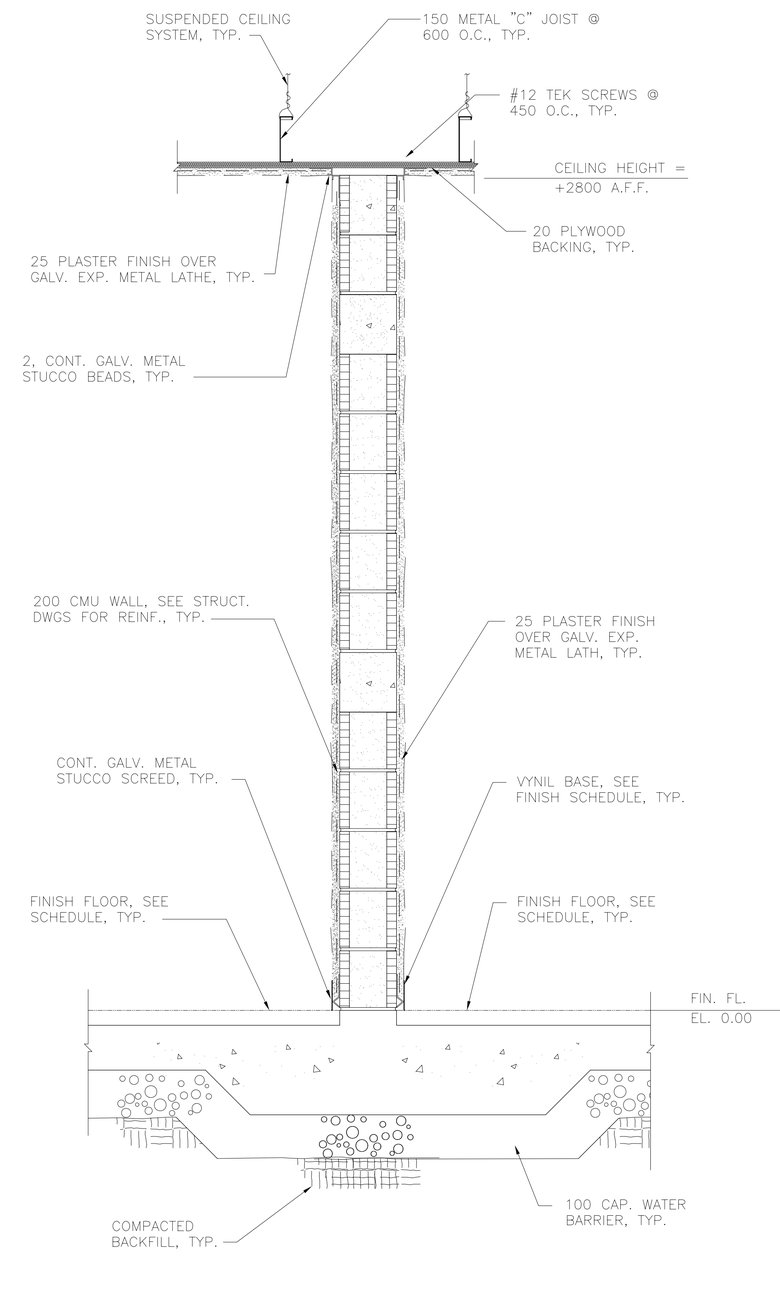

B SECTION

E-A-01 | REF. | SCALE: 1:10

GRAPHIC SCALE:

200 0 200mm

SCALE: 1 = 10

UNLESS OTHERWISE NOTED, LINEAR DIMENSIONS SHOWN ARE IN MILLIMETERS.

SYMBOL	DESCRIPTION	DATE	APR

Designed By: T. WALLACE
Drawn By: T. WALLACE
Checked By: R. BROWN
B. THOMAS

Date: 10 MAY 2007
File No. AF0707
I.S.O. Sheet File Name: AF0707E-AR09SE.dwg
Solicitation Number: –

US Army Corps of Engineers Transatlantic Programs Center

ANA REGIONAL BRIGADE
PAKTIKA, AFGHANISTAN
FIRE STATION

INTERIOR WALL SECTIONS

SHEET REFERENCE NUMBER:

E-A-09

$DATE$
$FILE$

D SIZE BORDER
32 X 20.5

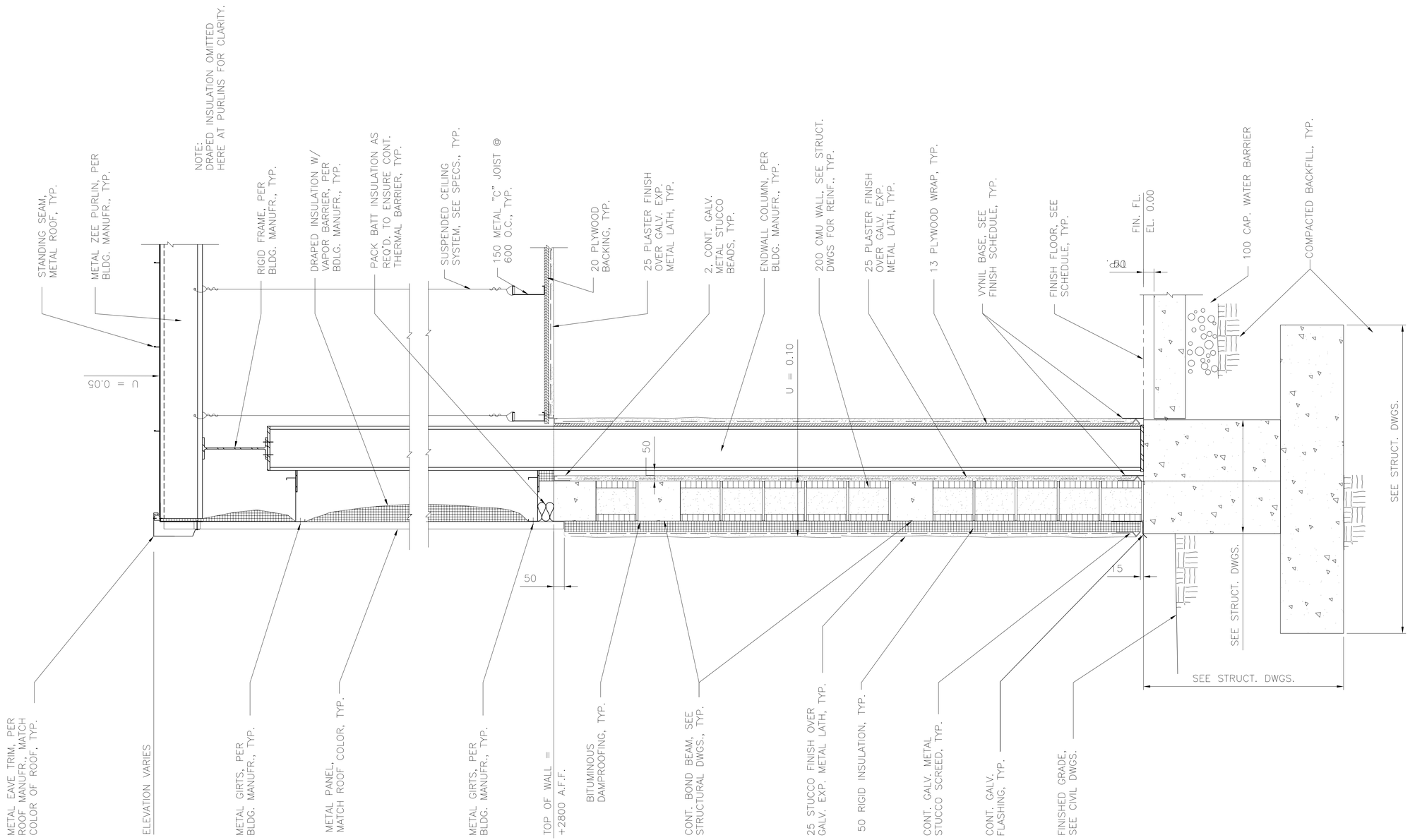

A SECTION
E-A-01 REF.

SCALE: 1:10

GRAPHIC SCALE:

200 0 200mm
SCALE: 1 = 10

UNLESS OTHERWISE NOTED, LINEAR DIMENSIONS SHOWN ARE IN MILLIMETERS.

SYMBOL	DESCRIPTION	DATE	APR

Designed By: I. WALLACE
Drawn By: I. WALLACE
Checked By: B. BROWN
B. THOMAS

Date: 10 MAY 2007
File No. AF0707
File Name: AF0707E-AR08SE.dwg
Solicitation Number: –

US Army Corps of Engineers Transatlantic Programs Center

ANA REGIONAL BRIGADE
PAKTIKA, AFGHANISTAN
FIRE STATION
WALL SECTION
– –

SHEET REFERENCE NUMBER:
E–A–08

$DATE$
$FILE$

D SIZE BORDER
32 X 20.5

A SECTION
E-A-01 REF.

SCALE: 1:10

SYMBOL	DESCRIPTION	DATE	APR

Designed By: T. WALLACE
Drawn By: T. WALLACE
Checked By: B. BROWN
B. THOMAS

Date: 10 MAY 2007
File No. AF0707
Sheet File Name: AF0707E-AR07SE.dwg
Solicitation Number: –

US Army Corps of Engineers Transatlantic Programs Center

ANA REGIONAL BRIGADE
PAKTIKA, AFGHANISTAN
FIRE STATION
WALL SECTIONS
– –

SHEET REFERENCE NUMBER:
E–A–07

$DATE$
$FILE$

D SIZE BORDER
32 X 20.5

UNLESS OTHERWISE NOTED, LINEAR DIMENSIONS SHOWN ARE IN MILLIMETERS.

A SECTION
E-A-01 REF.

SCALE: 1:10

SYMBOL	DESCRIPTION	DATE	APR

Designed By: T. WALLACE
Date: 10 MAY 2007
Drawn By: T. WALLACE
File No. AF0707
Checked By: B. BROWN
Sheet File Name: AF0707E-AR06SE.dwg
B. THOMAS
Solicitation Number: –

US Army Corps of Engineers Transatlantic Programs Center

ANA REGIONAL BRIGADE
PAKTIKA, AFGHANISTAN
FIRE STATION
WALL SECTION
– –

SHEET REFERENCE NUMBER:
E–A–06

$DATE$
$FILE$

D SIZE BORDER
32 X 20.5

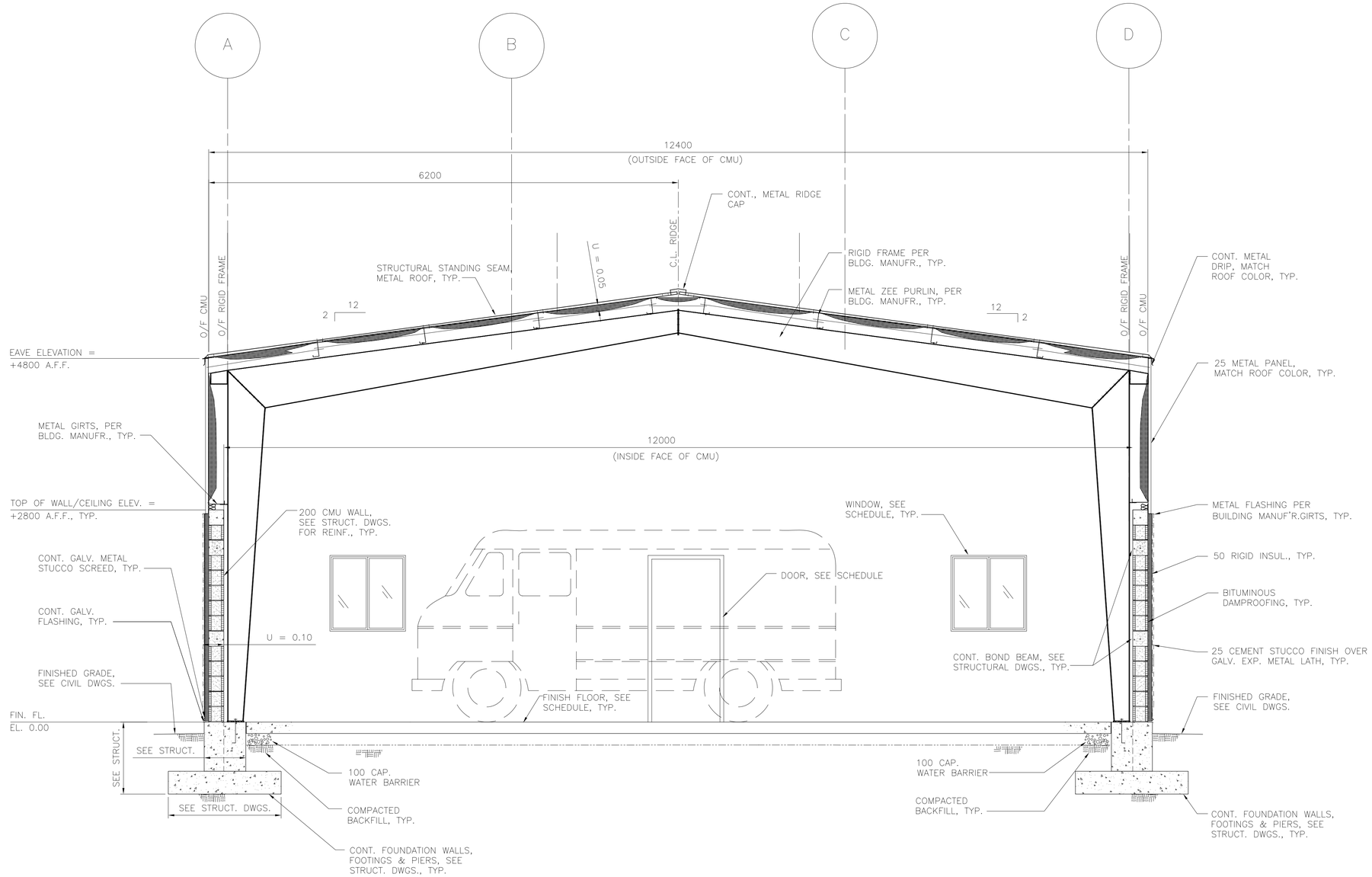

2 FIRESTATION - SECTION

E-A-01 REF. SCALE: 1:10

UNLESS OTHERWISE NOTED, LINEAR DIMENSIONS SHOWN ARE IN MILLIMETERS.

SYMBOL	DESCRIPTION	DATE	APD

Designed By: T. WALLACE
Drawn By: T. WALLACE
Checked By: B. BROWN
B. THOMAS
Date: 10 MAY 2007
File No. AF0707
File Name: AF0707E-AR03SE.dwg
Solicitation Number: –

US Army Corps of Engineers Transatlantic Programs Center

ANA REGIONAL BRIGADE
PAKTIKA, AFGHANISTAN
FIRE STATION
BUILDING SECTION
– –

SHEET REFERENCE NUMBER:
E–A–05

$DATE$
$FILE$

D SIZE BORDER
32 X 20.5

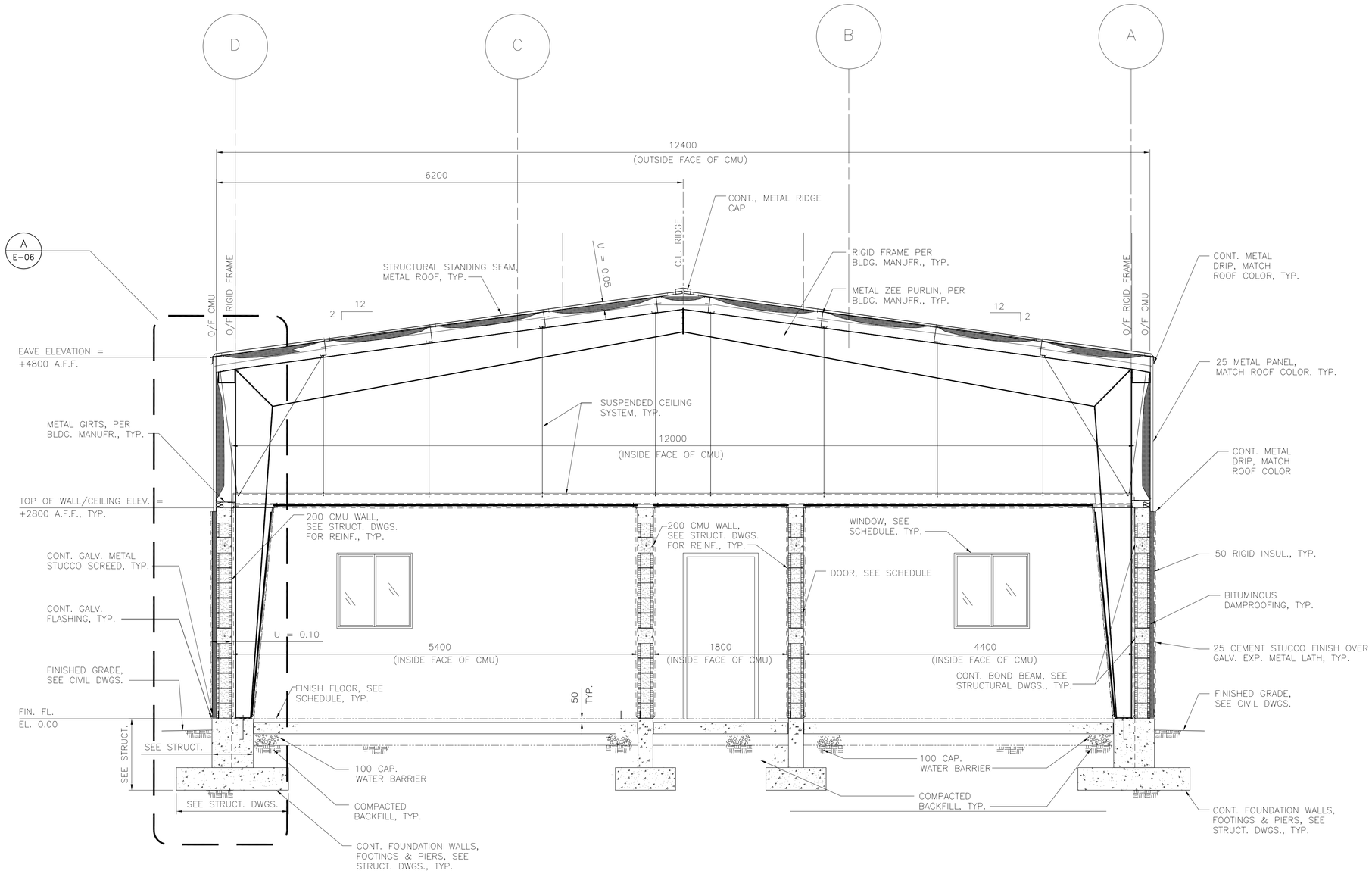

1 FIRESTATION - SECTION

E-A-01 REF. SCALE: 1:30

UNLESS OTHERWISE NOTED, LINEAR DIMENSIONS SHOWN ARE IN MILLIMETERS.

SYMBOL	DESCRIPTION	DATE	APR

Designed By: T. WALLACE
Drawn By: T. WALLACE
Checked By: B. BROWN
B. THOMAS

Date: 10 MAY 2007
File No. AF0707
File Name: AF0707E-ARG4SE.dwg
Solicitation Number: –

US Army Corps of Engineers Transatlantic Programs Center

ANA REGIONAL BRIGADE
PAKTIKA, AFGHANISTAN
FIRE STATION
BUILDING SECTION
– –

SHEET REFERENCE NUMBER:
E–A–04

$DATE$
$FILE$

D SIZE BORDER
32 X 20.5

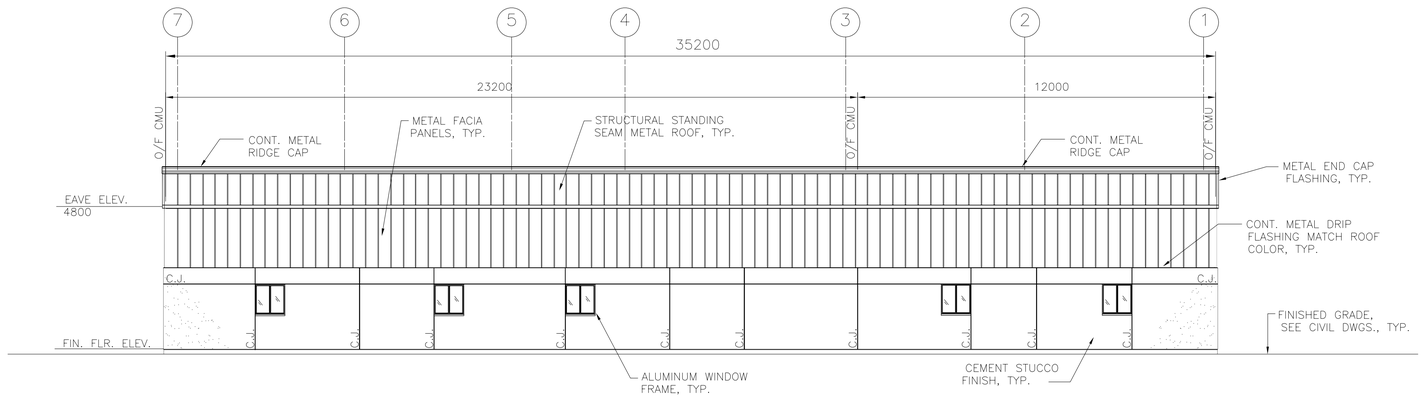

3 FIRESTATION - ELEVATION

E-A-01 REF. SCALE: 1:100

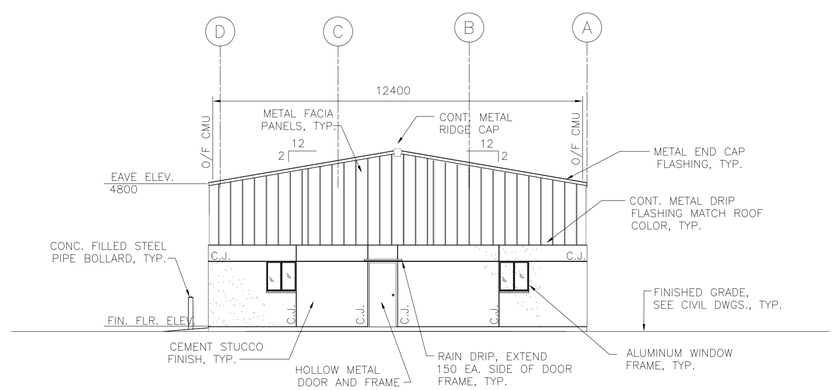

4 FIRESTATION - ELEVATION

E-A-01 REF. SCALE: 1:100

GRAPHIC SCALE:

2000 0 2000mm

SCALE: 1 = 100

UNLESS OTHERWISE NOTED, LINEAR DIMENSIONS SHOWN ARE IN MILLIMETERS.

SYMBOL	DESCRIPTION	DATE	APD

Designed By: T. WALLACE
Drawn By: T. WALLACE
Checked By: B. BROWN
B. THOMAS

Date: 10 MAY 2007
File No. AF0707
A/E/O Sheet File Name: AF0707E-AROUSEL.dwg
Solicitation Number: –

US Army Corps of Engineers Transatlantic Programs Center

ANA REGIONAL BRIGADE
PAKTIKA, AFGHANISTAN
FIRE STATION
ELEVATIONS
– –

SHEET REFERENCE NUMBER:
E–A–03

$DATE$
$FILE$

D SIZE BORDER
32 X 20.5

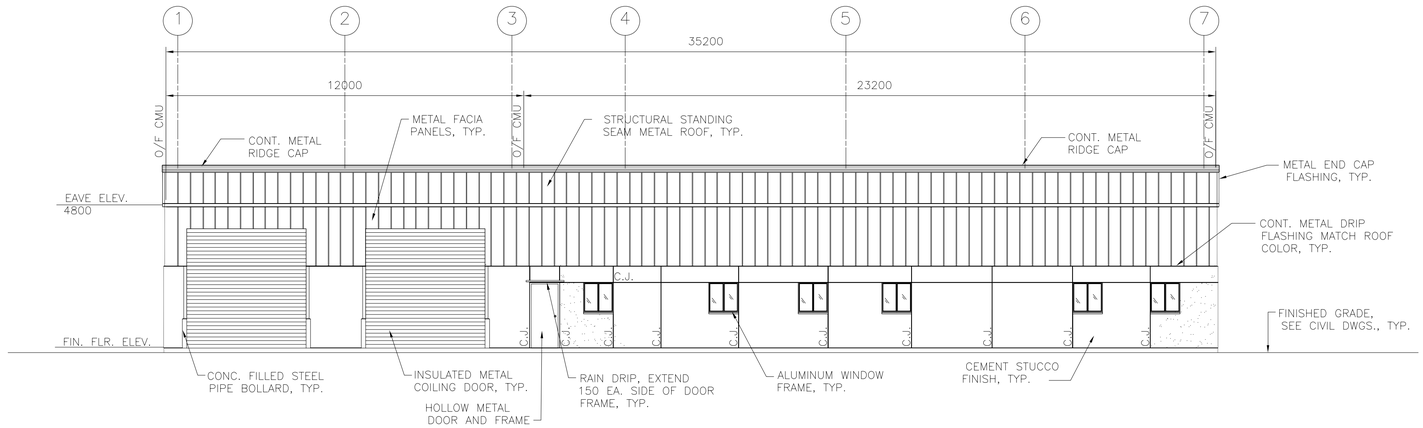

1 FIRESTATION - ELEVATION

E-A-01 REF. SCALE: 1:100

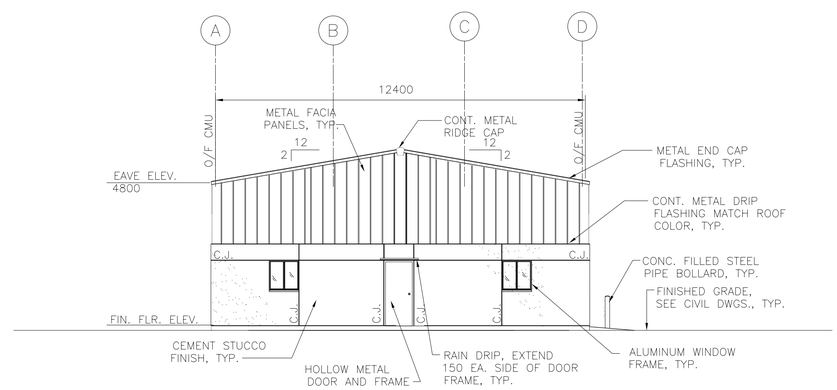

2 FIRESTATION - ELEVATION

E-A-01 REF. SCALE: 1:100

GRAPHIC SCALE:

2000 0 2000mm

SCALE: 1 = 100

UNLESS OTHERWISE NOTED, LINEAR DIMENSIONS SHOWN ARE IN MILLIMETERS.

SYMBOL	DESCRIPTION	DATE	APR

Designed By: T. WALLACE
Drawn By: T. WALLACE
Checked By: B. BROWN
B. THOMAS

Date: 10 MAY 2007
File No. AF0707
A/E Sheet File Name: AF0707E-AR02ELE.dwg
Solicitation Number: –

US Army Corps of Engineers Transatlantic Programs Center

ANA REGIONAL BRIGADE
PAKTIKA, AFGHANISTAN
FIRE STATION
ELEVATIONS
– –

SHEET REFERENCE NUMBER:
E–A–02

$DATE$
$FILE$

D SIZE BORDER
32 X 20.5

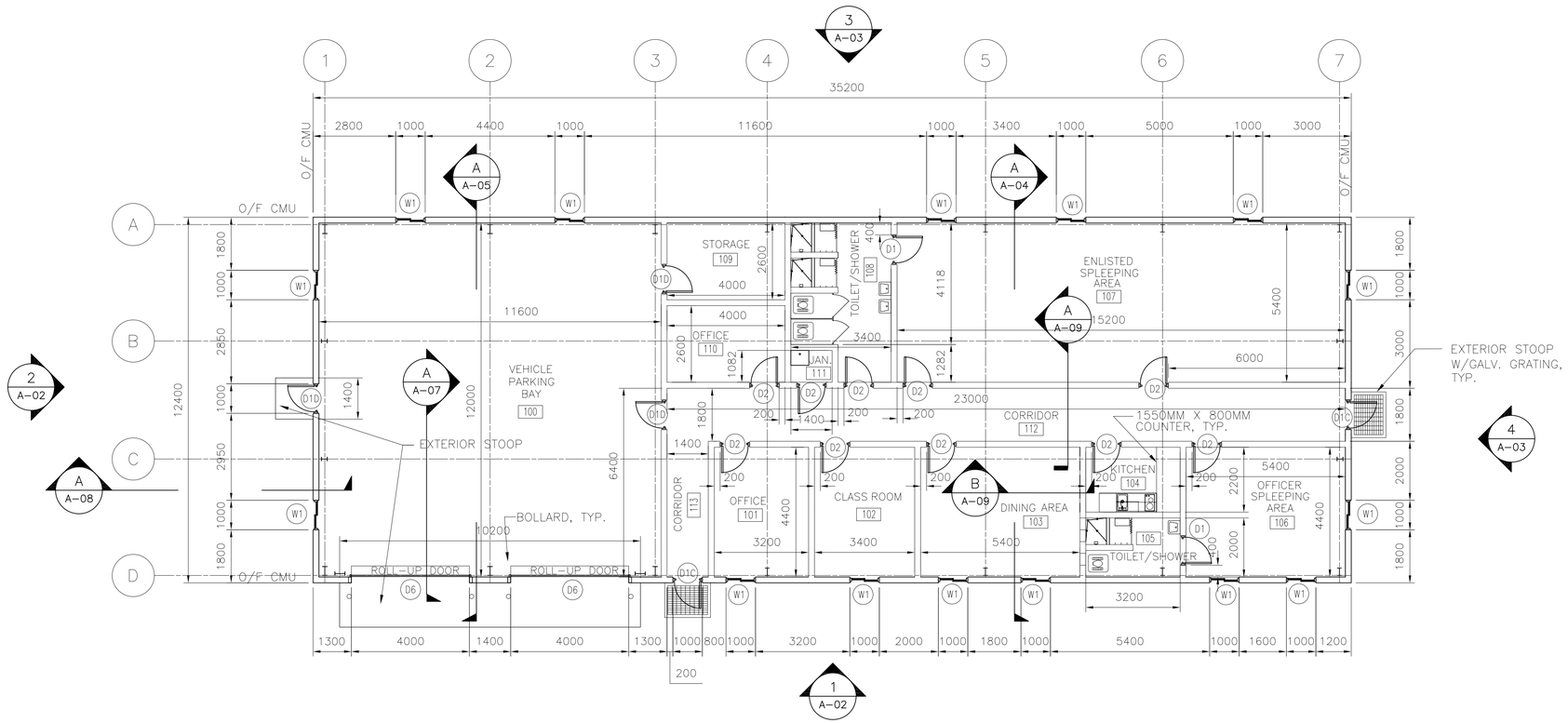

FIRESTATION - FLOOR PLAN

SCALE: 1:100

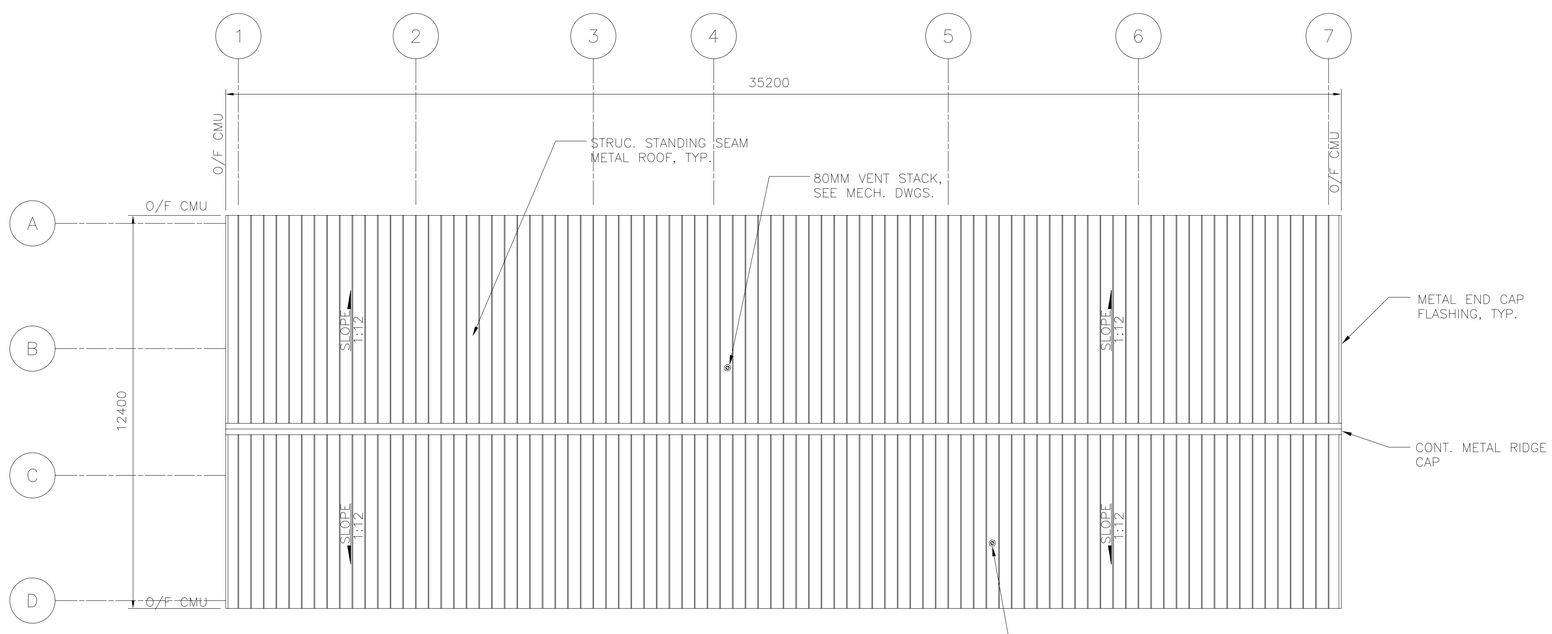

FIRESTATION - ROOF PLAN

SCALE: 1:100

WALL SYMBOL:

CMU WALL

NOTES:

1- ALL WALLS ARE 200MM THK. CMU UNLESS NOTED OTHERWISE.

2- ALL WALLS TERMINATE AT CEILING UNLESS NOTED OTHERWISE. REF. STRUCT. DRWGS.

3- ALL DOOR JAMBS ARE 200MM UNLESS OTHERWISE NOTED.

4- ALL DIMENSIONS ARE TO FACE OF CMU UNLESS NOTED OTHERWISE.

5- ALL VERTICAL DIMENSIONS & LEVELS ARE FROM GROUND FLOOR FINISHED SLAB. THIS ELEVATION IS +0000.

6- SEE DRAWING _____ FOR MISCELLANEOUS DETAILS.

7- SEE STRUCTURAL DRAWINGS FOR LOCATION OF BUILDING CONTROL, EXPANSION AND SEISMIC JOINTS.

SYMBOL	DESCRIPTION	DATE	APR

Designed By: T. WALLACE
Date: 10 MAY 2007
Drawn By: T. WALLACE
File No: AF0707
Checked By: B. THOMAS
I.S.O. Sheet File Name: AF0707E-AR01PN.dwg
T. WHITESIDE
Solicitation Number: –

US Army Corps of Engineers Transatlantic Programs Center

ANA REGIONAL BRIGADE
PAKTIKA, AFGHANISTAN
FIRE STATION

FLOOR / ROOF PLAN
–

GRAPHIC SCALE:

2000 0 2000mm
SCALE: 1 = 100

UNLESS OTHERWISE NOTED, LINEAR DIMENSIONS SHOWN ARE IN MILLIMETERS.

SHEET REFERENCE NUMBER:

E-A-01

$DATE$
$FILE$

ARCHITECTURAL ABBREVIATIONS

A	
ABOVE FINISH FLOOR	AFF
ACCESS PANEL	AP
ACOUSTIC	ACOUS (ACST)
ACTIVE LEAF	A/L
AGGREGATE	AGG
AIR CONDITIONING	A/C
ALUMINUM	ALUM (AL)
ANCHOR BOLT	AB
AND	&
ANGLE	∠ (ANG)
ARCHITECTURAL	ARCH
AREA INLET	AI.
ASPHALT	ASPH
AT	@
AUTOMATIC	AUTO
B	
BACK OF WALL	BOW
BATTEN INSULATION	BATT INSUL
BEAM	BM
BEARING	BRG
BITUMINOUS	BIT (BITUM)
BLOCK	BLK
BLOCKING	BLKG
BOARD	BD
BOTTOM	BOT (BOTT)
BRACING	BRCG
BRACKET	BRKT
BUILDING	BLDG
C	
CABINET	CAB
CAST IRON	CI
CATCH BASIN	CB
CEILING	CLG
CEMENT	CEM
CENTER	CTR
CENTER LINE	℄ OR CL
CENTER TO CENTER	CC
CERAMIC TILE	CT
CIRCULAR	CIR
CLEANOUT	CO
CLEAR	CLR
CLOSET	CLO
COLUMN	COL
CONCRETE	CONC
CONCRETE MASONRY UNITS	CMU
CONNECTION	CONN
CONSTRUCTION	CONSTR
CONSTRUCTION JOINT	CONSTR JT
CONTINUOUS	CONT.
CONTROL JOINT	CJ
CORNER	COR
CORRIDOR	CORR
COUNTER	CNTR
COUNTER SUNK	CSK
D	
DAMPPROOFING	DP
DETAIL	DET (DETL)
DIAGONAL	DIAG
DIAMETER	DIA
DIMENSION	DIM
DISPENSER	DISP
DOOR	DR
DOUBLE	DBL
DOWN	DN
DRAWER	DWR
DRAWING	DWG
DRINKING FOUNTAIN	DF
E	
EACH	EA
ELECTRICAL OR ELECTRIC	ELEC
ELEVATION	EL.
EMERGENCY	EMERG
ENCLOSURE	ENCL
ENTRANCE	ENTR
EQUIPMENT	EQUIP (EQPT)
EQUAL	EQ
EXHAUST	EXH
EXISTING	EXIST.
EXPANSION	EXPN
EXPANSION JOINT	EJ (EXP JT)
EXTERIOR	EXT
F	
FACE OF CONCRETE	FOC
FACE OF FINISH	FOF
FACE OF MASONRY	FOM
FACE OF WALL	FOW
FINISH	FIN.
FIRE HYDRANT	FH
FIXTURE	FIX
FLASHING	FLASH
FLOOR	FLR OR FL
FLOOR DRAIN	FD
FLOORING	FLG
FOOTING	FTG
FOUNDATION	FDN
FRAME	FR
FINISH FLOOR LINE	FFL
FIRE EXTINGUISHER	FE
G	
GAGE OR GAUGE	GA
GALVANIZED	GALV
GALVANIZED IRON	GI
GAS	G
GRID LINE	GL
GLAZED WALL TILE	GWT
GRADE	GR
GROUND	GND
GROUND CLEANOUT	GCO
GYPSUM	GYP
GYPSUM WALLBOARD	GYP BD (GWB)
H	
HANDRAIL	HDR
HARDBOARD	HBD
HARDWARE	HDW (HW)
HEAD	HD
HEATER	HTR
HEIGHT	HT (HGT)
HIGH POINT	H.PT.
HOLLOW METAL	HM
HORIZONTAL	HORIZ
HOSE BIBB	HB
I	
INSIDE DIAMETER	I.D.
INSULATION	INSUL.
INTERIOR	INT (INTR)
J	
JANITOR	JAN
JOINT	JT
JOIST	JST
K	
KEY LOCK	KL
KICK PLATE	KP
L	
LABORATORY	LAB
LAMINATE	LAM
LAVATORY	LAV
LIGHT	LT
LIGHTING	LTG
LOW POINT	LP
LUMBER	LBR
LOUVER	LVR
M	
MACHINE	MACH
MAINTENANCE	MAINT
MASONRY OPENING	MO
MASONRY UNIT	MU
MASTIC	MSTC
MATERIAL	MATL
MAXIMUM	MAX
MECHANICAL	MECH
METAL	MET
METAL BUILDING MANUFACTURER	MBM
MINIMUM	MIN
MIRROR	MIR
MISCELLANEOUS	MISC
MONOLITHIC	MONO
N	
NORTH	N
NOT IN CONTRACT	NIC
NUMBER	NO. (#)
NOT TO SCALE	NTS
O	
OFFICE	OFF.
ON CENTER	OC
OPENING	OPNG
OPPOSITE	OPP
OUTSIDE DIAMETER	O.D.
P	
PANEL	PNL
PAPER TOWEL DISPENSER	PTD
PAPER TOWEL DISPENSER & RECEPTACLE	PTD/R
PAPER TOWEL RECEPTACLE	PTR
PARTITION	PRTN
PLASTER	PLAST
PLATE	PL OR P
PLUMBING	PLBG
PLYWOOD	PLY WD
PRECAST	PRCST
Q	
QUARRY TILE	Q.T.
QUARTERS	QTRS
R	
RADIUS	RAD
RECEPTACLE	RECP
REFERENCE	REF
REFRIGERATOR	REFR
REINFORCEMENT	REINF
REQUIRED	REQD
REVISIONS	REV
RISER	R
ROOFING	RFG
ROOM	RM
ROUGH	RGH
S	
SANITARY NAPKIN DISPENSER	SND
SANITARY NAPKIN RECEPTACLE	SNR
SCHEDULE	SCH
SEAT COVER DISPENSER	SCD
SERVICE SINK	SSK
SHEATHING	SHTHG
SHEET	SHT.
SHEET METAL	SHT. MET.
SHOWER	SHR
SIMILAR	SIM
SOAP DISPENSER	SD
SOLID CORE	SC
SOUTH	S
SPEAKER	SPKR
SPECIFICATION	SPEC
SPLASH BLOCK	SB
SQUARE	SQ OR ⧈
STANDARD	STD
STEEL	STL
STORAGE	STOR
STRUCTURAL	STRL
SUSPENDED	SUSP
SYMMETRICAL	SYM
T	
TELEPHONE	TEL
TEMPERATURE	TEMP
TEMPERED GLASS	T
TERRAZZO	TER
THICK	THK
TOILET PAPER DISPENSER	TPD
TOP OF CONCRETE	TOC
TOP OF CURB	TC
TOP OF PAVEMENT	TP
TOP OF STEEL	TOS
TOP OF WALL	TW
TOPOGRAPHY	TOPO
TYPICAL	TYP
U	
UNLESS OTHERWISE NOTED	UON
URINAL	UR
V	
VENTILATOR	VENT
VENT THRU ROOF	VTR
VERTICAL	VERT
VESTIBULE	VEST
W	
WATER CLOSET	WC
WEIGHT	WT
WELDED WIRE FABRIC	WWF
WINDOW	WW
WITH	W/
WITHOUT	W/O
WOOD	WD

SYMBOLS

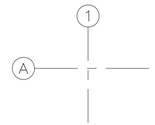

GRID LINES

DETAIL

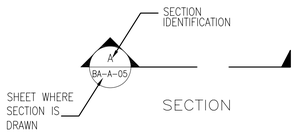

SECTION

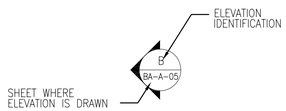

EXTERIOR ELEVATION

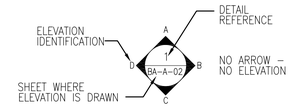

INTERIOR ELEVATION

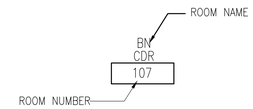

ROOM IDENTIFICATION

DOOR NUMBER

WINDOW NUMBER

LOUVER NUMBER

MATERIAL LEGEND

CONCRETE

CONCRETE MASONRY UNIT (CMU)

SAND, MORTAR

METAL STUD WALL

WOOD – FRAMING

WOOD BLOCKING

METAL

INSULATION, BATT

GYPSUM BOARD

WOOD – FINISH

GENERAL NOTES:

UNLESS OTHERWISE NOTED, LINEAR DIMENSIONS SHOWN ARE IN MILLIMETERS.

SYMBOL	DESCRIPTION	DATE	APR

Designed By: T. WALLACE
Date: 10 MAY 2007
Drawn By: T. WALLACE
File No. AF0707
Checked By: R. BROWN
I.S.O. Sheet File Name: A0707E-AB00.dwg
B. THOMAS
Solicitation Number: –

US Army Corps of Engineers Transatlantic Programs Center

ANA REGIONAL BRIGADE
PAKTIKA, AFGHANISTAN
FIRE STATION

ABBREVIATIONS & SYMBOLS

–

SHEET REFERENCE NUMBER:

E–A–00

$DATE$
$FILE$

D SIZE BORDER
32 X 20.5

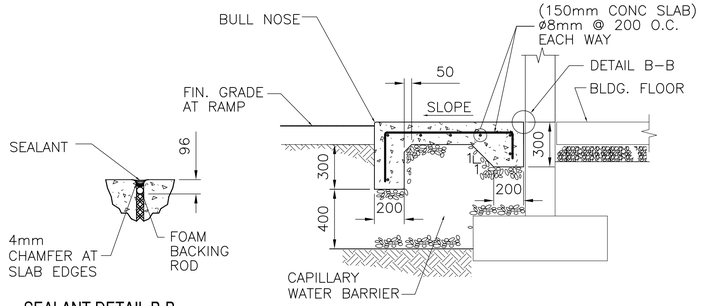

SEALANT DETAIL B-B

SECTION A-A

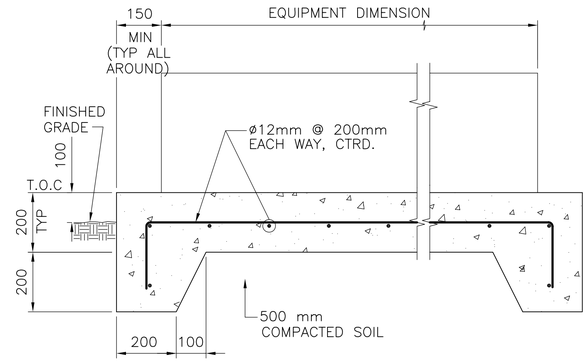

TYPICAL ALL AROUND PERIMETER

NOTE:
PAD DIMENSIONS, ANCHOR BOLT SIZE AND LOCATIONS, AND OTHER EMBEDDED ITEMS SHALL CONFORM TO EQUIPMENT MANUFACTURER'S REQUIREMENTS.

2 CONCRETE PAD FOR EXTERIOR EQUIPMENT

E-SS-04 REF. SCALE: 1:10

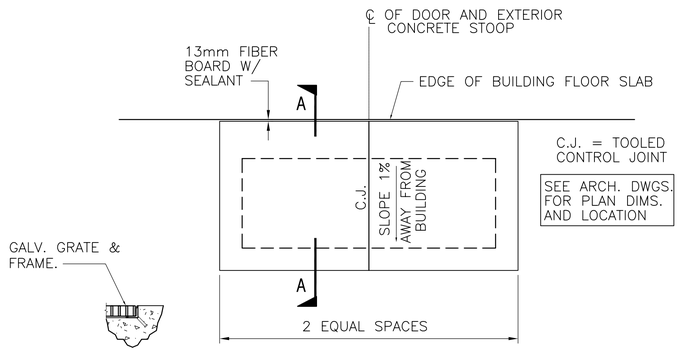

DETAIL D-D

EXTERIOR STOOPS

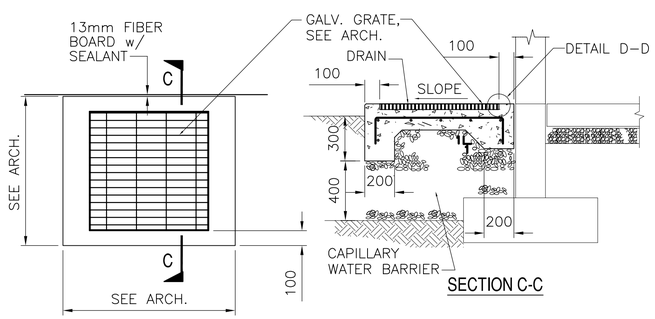

SECTION C-C

EXTERIOR STOOPS w/ GALVANIZED GRATE

1 CONCRETE STOOP/RAMP DETAILS

E-SS-04 REF. SCALE: 1:20

200 0 200mm
SCALE: 1 = 10

UNLESS OTHERWISE NOTED, LINEAR DIMENSIONS SHOWN ARE IN MILLIMETERS.

SYMBOL	DESCRIPTION	DATE	APP.

Designed By: D. SMITH
Drawn By: D. SMITH
Checked By: M. THOMPSON
Date: 10 MAY 2007
File No. AF0707
I.S.O. Sheet File Name: AF0707E–SS04DT.DWG
Solicitation Number: –

US Army Corps of Engineers
Transatlantic Programs Center

ANA REGIONAL BRIGADE
PAKTIKA, AFGHANISTAN
FIRE STATION

MISCELLANEOUS EXTERIOR CONCRETE PAD DETIALS

SHEET REFERENCE NUMBER:
E–SS–04

$DATE$
$FILE$

D SIZE BORDER
32 X 20.5

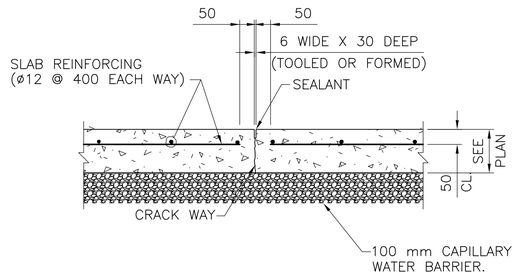

1 SLAB ON GRADE OR PAVEMENT CONTROL JOINT

FB-SS-03 | REF. | SCALE: 1:10

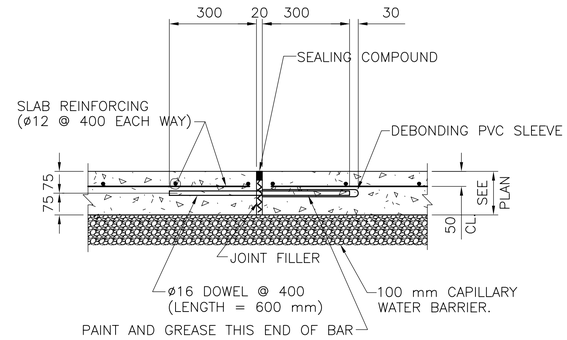

2 PAVEMENT EXPANSION JOINT

FB-SS-03 | REF. | SCALE: 1:10

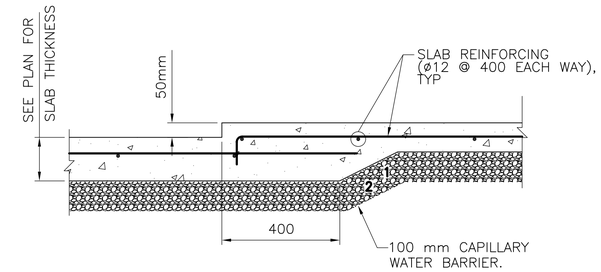

3 DEPRESSED SLAB DETAIL

FB-SS-03 | REF. | SCALE: 1:10

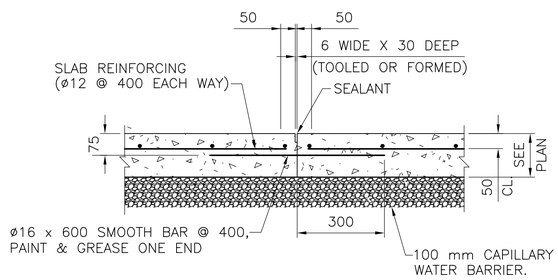

4 SLAB ON GRADE OR PAVEMENT CONSTRUCTION JOINT

FB-SS-03 | REF. | SCALE: 1:10

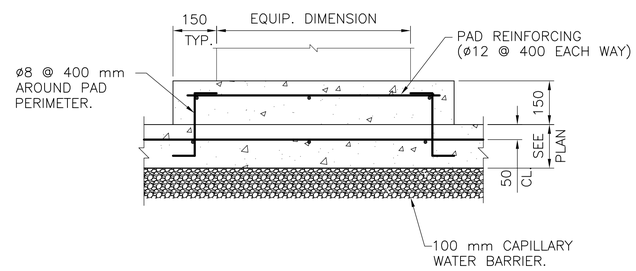

5 INTERIOR EQUIPMENT PAD DETAIL

FB-SS-03 | REF. | SCALE: 1:10

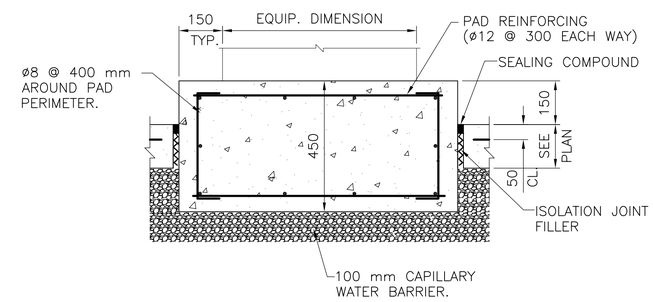

6 LARGE EQUIPMENT ISOLATION PAD DETAIL

FB-SS-03 | REF. | SCALE: 1:10

200 0 200mm
SCALE: 1 = 10

UNLESS OTHERWISE NOTED, LINEAR DIMENSIONS SHOWN ARE IN MILLIMETERS.

SYMBOL	DESCRIPTION	DATE	APR

Designed By: D. SMITH
Date: 10 MAY 2007
Drawn By: D. SMITH
File No. AF0707
Checked By: M. THOMPSON
I.S.O. Sheet File Name: AF0707FB-SS03DT.DWG
Solicitation Number: –

US Army Corps of Engineers Transatlantic Programs Center

ANA REGIONAL BRIGADE
PAKTIKA, AFGHANISTAN
RANGES
AMMUNITION STORAGE BUILDING

TYPICAL SLAB ON GRADE DETAILS

SHEET REFERENCE NUMBER:
FB-SS-03

$DATE$
$FILE$

D SIZE BORDER
32 X 20.5

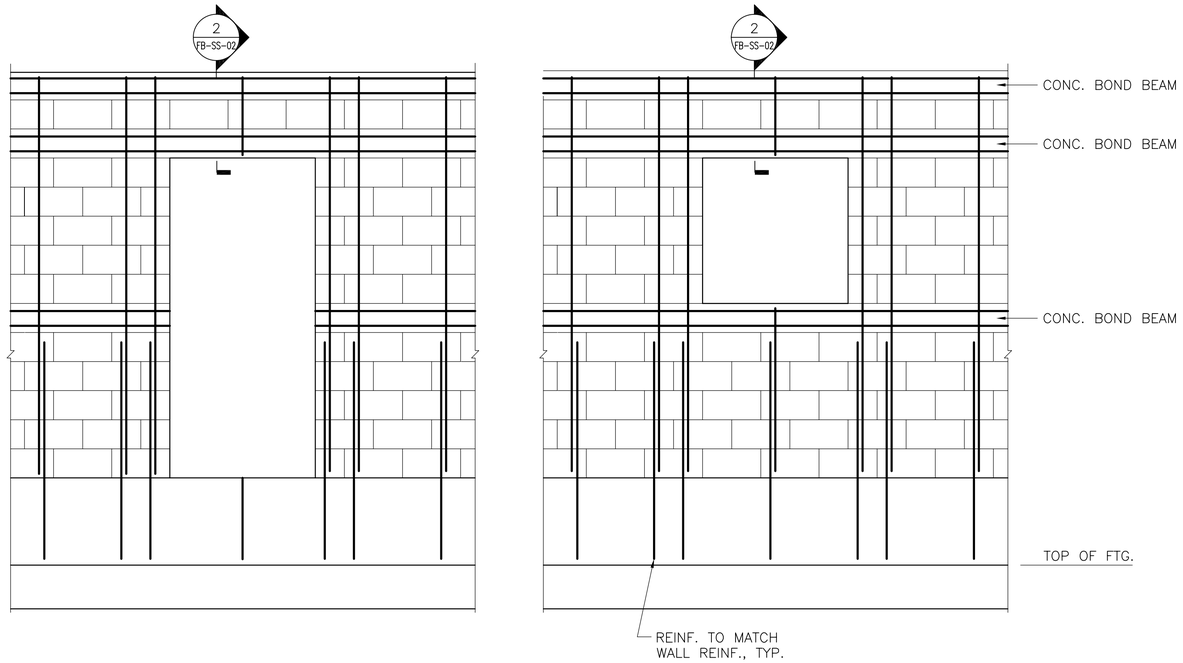

1 | CMU WALL PARTIAL ELEVATION

FB-SS-02 | REF. | SCALE: 1:20

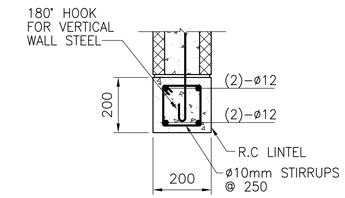

2 | LINTEL SECTION

FB-SS-02 | REF. | SCALE: 1:10

200 0 200mm
SCALE: 1 = 10

UNLESS OTHERWISE NOTED, LINEAR DIMENSIONS SHOWN ARE IN MILLIMETERS.

SYMBOL	DESCRIPTION	DATE	APR

Designed By: D. SMITH
Drawn By: D. SMITH
Checked By: M. THOMPSON
Date: 10 MAY 2007
File No. AF0707
I.S.O. Sheet File Name: AF0707FB-SS02DT.DWG
Solicitation Number: -

US Army Corps of Engineers Transatlantic Programs Center

ANA REGIONAL BRIGADE
PAKTIKA, AFGHANISTAN
RANGES
AMMUNITION STORAGE BUILDING

TYPICAL MASONRY DETAILS

SHEET REFERENCE NUMBER:
FB-SS-02

$DATE$
$FILE$

D SIZE BORDER
32 X 20.5

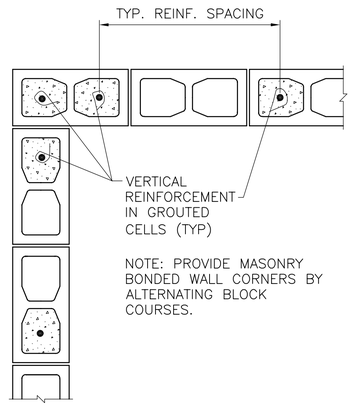

1 TYPICAL CMU CORNER WALL REINFORCING DETAIL

E-SS-01 REF. SCALE: 1:10

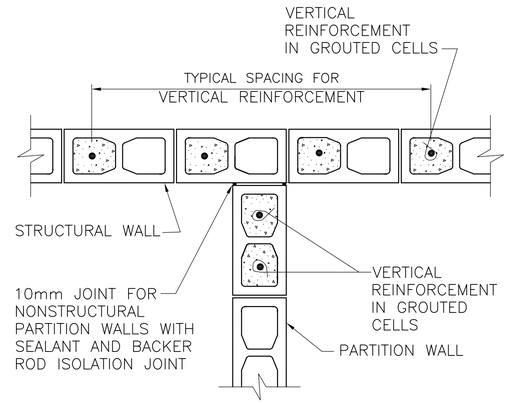

2 TYPICAL CMU PARTITION WALL REINFORCING DETAIL

E-SS-01 REF. SCALE: 1:10

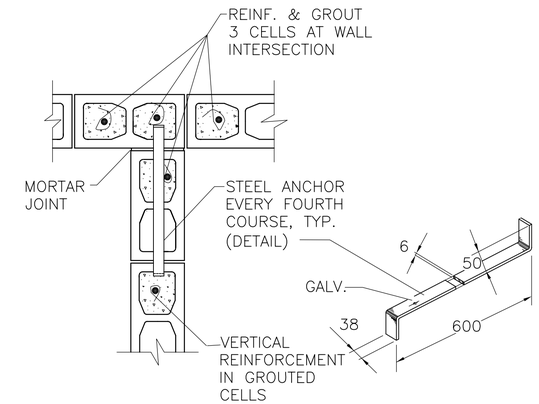

3 TYPICAL CMU STRUCTURAL WALL REINFORCING DETAIL

E-SS-01 REF. SCALE: 1:10

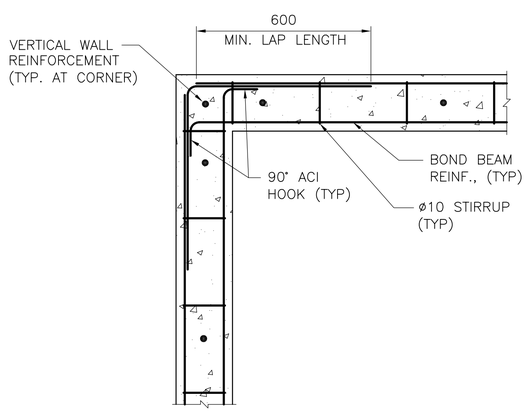

4 TYPICAL CIP CONCRETE BOND BEAM REINFORCING DETAIL

E-SS-01 REF. SCALE: 1:10

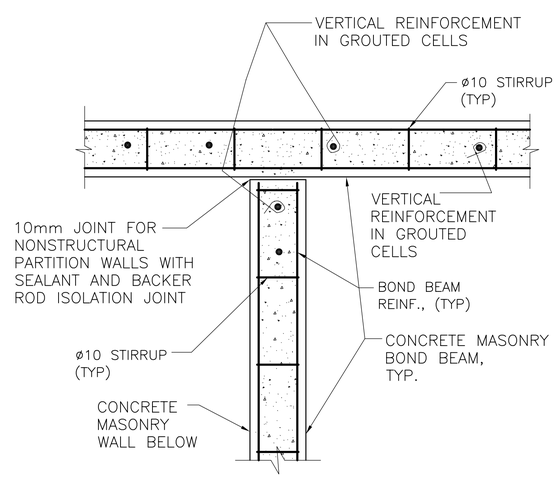

5 TYPICAL CIP CONCRETE BOND BEAM REINFORCING DETAIL

E-SS-01 REF. SCALE: 1:10

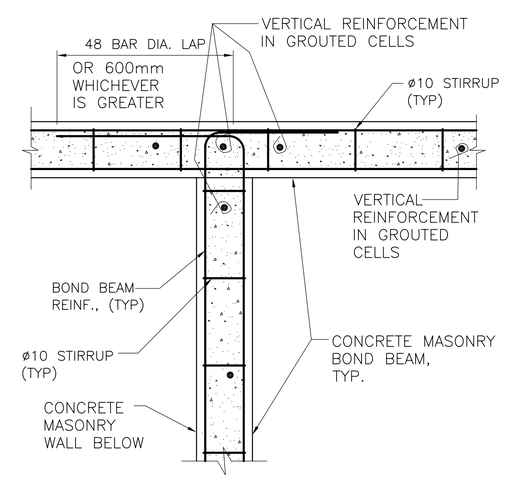

6 TYPICAL CIP CONCRETE BOND BEAM REINFORCING DETAIL

E-SS-01 REF. SCALE: 1:10

200 0 200mm
SCALE: 1 = 10

UNLESS OTHERWISE NOTED, LINEAR DIMENSIONS SHOWN ARE IN MILLIMETERS.

SYMBOL	DESCRIPTION	DATE	APR

Designed By: D. SMITH
Drawn By: D. SMITH
Checked By: M. THOMPSON
Date: 10 MAY 2007
File No. AF0707
U.S.O. Sheet File Name: AF0707FB-SS01DT.DWG
Solicitation Number: –

US Army Corps of Engineers Transatlantic Programs Center

ANA REGIONAL BRIGADE
PAKTIKA, AFGHANISTAN RANGES
AMMUNITION STORAGE BUILDING

TYPICAL MASONRY DETAILS

SHEET REFERENCE NUMBER:
FB-SS-01

$DATE$
$FILE$

D SIZE BORDER
32 X 20.5

GENERAL:

1. CONTRACTOR SHALL VERIFY ALL DIMENSIONS AND CONDITIONS AFFECTING THE WORK AT JOBSITE.

2. ALL STRUCTURAL WORK AND MATERIALS SHALL CONFORM TO THE REQUIREMENTS OF THE PROJECT SPECIFICATIONS.

3. FOR LOCATION AND DIMENSIONS OF GROOVES, REGLETS, SLEEVES, OPENINGS, AND EMBEDDED OR ATTACHED ITEMS, REFER TO ARCHITECTURAL, MECHANICAL, ELECTRICAL, AND PIPING DRAWINGS.

CODES:

1. ALL PARTS SHALL BE FURNISHED AND ERECTED ACCORDING TO THE APPLICABLE CODES AND SPECIFICATIONS OF THE FOLLOWING:

AMERICAN CONCRETE INSTITUTE	(ACI)
AMERICAN INSTITUTE OF STEEL CONSTRUCTION	(AISC)
AMERICAN IRON AND STEEL INSTITUTE	(AISI)
AMERICAN WELDING SOCIETY	(AWS)
MINIMUM DESIGN LOADS FOR BUILDINGS AND OTHER STRUCTURES	(ASCE)
INTERNATIONAL BUILDING CODE	(IBC)

DESIGN LOADS:

1. ROOF LOADING

A. LIVE LOAD 100 KG/SQ METER (20 PSF)
B. SNOW LOAD 75 KG/SQ METER (15 PSF)
C. COLLATERAL LOAD 50 KG/SQ METER (10 PSF)

2. WIND LOADING

A. BASIC WIND SPEED 145 KM/HR (90 MPH)
B. EXPOSURE CATEGORY "B"
C. IMPORTANCE FACTOR, Iw = 1.00
D. BUILDING CATEGORY "II"

3. SEISMIC LOADING:

A. Ss = 1.28g
B. S1 = 0.51g
C. SEISMIC USE GROUP "I"
D. SITE CLASSIFICATION "D"
E. IMPORTANCE FACTOR I = 1.0

BASIC SEISMIC FORCE RESISTING SYSTEM:

LOAD BEARING CMU WALL SYSTEM WITH SPECIAL REINFORCED MASONRY SHEAR WALLS

DESIGN BASE SHEAR: 0.17W

ANALYSIS PROCEDURE: EQUIVALENT LATERAL FORCE METHOD

FOUNDATIONS:

1. ALL FOOTINGS SHALL BEAR ON SOIL CAPABLE OF SUSTAINING THE LOADS.

2. CONTINUOUS WALL FOOTINGS WERE DESIGNED FOR A SOIL BEARING CAPACITY OF 9765 KG/SQ. METER (2000 PSF). ISOLATED COLUMN FOOTINGS WERE DESIGNED FOR A MAXIMUM BEARING CAPACITY OF 9765 KG/SQ. METER (2000 PSF).

3. ELEVATIONS SHOWN ON PLANS FOR TOP OF FOOTINGS ARE MINIMUM DEPTH. DIFFERENT OR UNUSUAL CONDITIONS SHALL BE REPORTED TO THE CONTRACTING OFFICER.

4. ALL FOOTING REINFORCEMENT SHALL BE SECURELY SUPPORTED ABOVE GROUND. CONCRETE BLOCK AND BROKEN TILE SHALL NOT BE USED. CONCRETE OR CLAY BRICK MAY BE USED.

CONCRETE:

1. STRUCTURAL CONCRETE FOR THE BUILDING STRUCTURE SHALL HAVE THE FOLLOWING PROPERTIES:

FOOTINGS: f'c = 210 KG/SQ. CM (3,000 PSI) AT 28 DAYS
SLABS: f'c = 210 KG/SQ. CM (3,000 PSI) AT 28 DAYS

2. ALL REINFORCING STEEL SHALL BE DEFORMED BARS CONFORMING TO ASTM A615 GRADE 60 UNLESS NOTED OTHERWISE.

3. LOCATION OF ALL CONCRETE JOINTS, OTHER THAN THOSE SPECIFIED, SHALL BE APPROVED BY THE CONTRACTING OFFICER BEFORE CONCRETE PLACEMENT.

4. MINIMUM PROTECTIVE COVER OF REINFORCEMENT (SEE DETAILS) SHALL BE AS FOLLOWS:

FOOTINGS, 75mm CLEAR BOTTOM AND SIDES, 40mm CLEAR TOP.
CONCRETE SLABS-ON-GRADE, 25mm CLEAR TOP.
WALLS, 40mm CLEAR SIDES.
CONCRETE PIERS, 40mm CLEAR TO TIES.
CONCRETE BOND BEAMS. 20mm CLEAR TO TIES.

5. MINIMUM CONCRETE SPLICES AND HOOKS FOR REINFORCING STEEL SHALL CONFORM TO ACI 318, CURRENT EDITION.

6. CONCRETE WORK SHALL BE COORDINATED WITH DRAINS, UNDERGROUND UTILITIES, MECHANICAL, ELECTRICAL, AND ARCHITECTURAL PLANS. CONCRETE SHALL NOT BE CAST UNTIL THESE ITEMS HAVE BEEN INSTALLED AND ACCEPTED.

7. CONCRETE FINISHES SHALL BE PROVIDED AS DESCRIBED IN THE SPECIFICATIONS.

8. CORNER BARS SHALL BE PROVIDED AT ALL INTERSECTIONS; BAR SIZE AND SPACING TO MATCH LARGER BAR.

9. SLABS ON GRADE SHALL BE REINFORCED AT ALL PENETRATIONS AND RE-ENTRANT CORNERS. PLACE 3-ø10 x 1.0 METER AROUND FLOOR DRAINS. PLACE 2-ø12 x 1.0 METER (MINIMUM) AT RE-ENTRANT CORNERS.

STRUCTURAL STEEL:

1. STRUCTURAL STEEL SHALL BE FABRICATED AND ERECTED IN ACCORDANCE WITH THE AMERICAN INSTITUTE OF STEEL CONSTRUCTION, "SPECIFICATION FOR STRUCTURAL STEEL BUILDINGS", 1989 (AISC ASD MANUAL, 9TH EDITION).

2. STEEL SHALL CONFORM TO THE FOLLOWING REQUIREMENTS UNLESS NOTED OTHERWISE:

MISCELLANEOUS PLATES AND ANGLES - ASTM A36 (Fy = 36 KSI)
RECTANGULAR HSS - ASTM A500, GRADE B (Fy = 46 KSI)
"W" SHAPES - ASTM A992

3. NO STRUCTURAL STEEL SHALL BE FABRICATED OR ERECTED UNTIL SHOP DRAWINGS HAVE BEEN APPROVED.

4. NO HOLES OTHER THAN THOSE SPECIFICALLY DETAILED SHALL BE ALLOWED THROUGH STRUCTURAL STEEL MEMBERS. CUTTING OF STEEL SHALL NOT BE PERMITTED WITHOUT APPROVAL OF THE CONTRACTING OFFICER.

5. THE CONTRACTOR SHALL VERIFY ALL SHOP DRAWING DIMENSIONS WITH THE STRUCTURAL AND ARCHITECTURAL PLANS AND DETAILS, AND WITH FIELD DIMENSIONS OF COLUMN LAYOUT.

7. BOLTED CONNECTIONS SHALL BE MADE WITH HIGH STRENGTH BOLTS CONFORMING TO ASTM A325, 20mm DIAMETER MINIMUM UNLESS NOTED OTHERWISE.

8. CONNECTIONS NOT SHOWN ON DRAWINGS SHALL BE DESIGNED BY THE FABRICATOR. CONNECTIONS SHALL BE SELECTED TO SUPPORT ONE HALF THE TOTAL UNIFORM LOAD CAPACITY SHOWN IN THE ALLOWABLE LOAD TABLES, PART 2 OF LATEST AISC MANUAL FOR THE GIVEN BEAM, SPAN, AND GRADE OF STEEL SPECIFIED. WHERE POSSIBLE, DOUBLE ANGLE CONNECTIONS SHALL BE USED.

MASONRY:

1. ENGINEERED MASONRY IS DESIGNED IN ACCORDANCE WITH "BUILDING CODE REQUIREMENTS FOR MASONRY STRUCTURES" (ACI 530-99/ ASCE 5-99/TMS 402-99).

2. UNITS: ASTM C90, TYPE (I) (NORMAL WEIGHT, MOISTURE CONTROLLED) (OR EQUIVALENT DIN, ACI OR EN STANDARDS) MORTAR: ASTM C270 TYPE S (OR EQUIVALENT DIN, ACI OR EN STANDARDS)

3. FULLY GROUT ALL CELLS CONTAINING REINFORCING STEEL OR ANCHORS UNLESS NOTED OTHERWISE.

4. USE 50 db FULL CONTACT LAP SPLICES FOR REINFORCING STEEL IN CMU WALLS UNLESS NOTED OTHERWISE.

5. SEE SPECIFICATION 04200 FOR MASONRY BLOCK. ALL VERTICAL CELLS OF MASONRY BLOCK WITH REINFORCING SHALL BE GROUTED SOLID TO FORM A COMPOSITE MASONRY AND STEEL ASSEMBLY.

6. PROVIDE AN ADDITIONAL VERTICAL REINFORCEMENT AT EACH SIDE OF INTERSECTION OF EXTERIOR WALLS, AND AT EACH SIDE OF ALL MASONRY OPENINGS GREATER THAN 250mm IN WIDTH. IN OPENINGS WIDER THAN 600mm, PROVIDE ADDITIONAL VERTICAL REINFORCEMENT IN TWO ADJACENT CELLS ON EACH SIDE OF THE OPENING. ADDED VERTICAL REINFORCEMENT SHALL BE CONTINUOUS FOR THE FULL HEIGHT OF WALL.

7. PROVIDE BOND BEAMS AT 1200mm MAXIMUM VERTICAL SPACING (EXCEPT AT RESTROOM AND SHOWER STALL PARTITION WALLS).

8. PROVIDE LINTEL ABOVE ALL MASONRY OPENINGS AS SHOWN IN DETAIL 3/SS-02.

9. PROVIDE A BOND BEAM BELOW ALL MASONRY OPENINGS AND EXTEND A MINIMUM OF 400mm BEYOND EACH SIDE OF OPENING.

TIMBER:

1. ALL TIMBER DESIGN AND CONSTRUCTION SHALL BE DONE IN ACCORDANCE WITH THE LATEST EDITION OF THE TIMBER CONSTRUCTION MANUAL OF THE AMERICAN INSTITUTE OF TIMBER CONSTRUCTION. ALL STRUCTURAL TIMBER MEMBERS SHALL HAVE THE FOLLOWING MINIMUM PROPERTIES:

A.	BENDING	Fb = 74 Kg/CM (SINGLE MEMBER USE)
		Fb = 84 Kg/CM (REPETITIVE MEMBER USE)
B.	TENSION	Ft = 49 Kg/CM (PARALLEL TO GRAIN)
C.	SHEAR	Fv = 4 Kg/CM (HORIZONTAL SHEAR)
D.	COMPRESSION	Fc = 21 Kg/CM (PERPENDICULAR TO GRAIN)
		Fc = 21 Kg/CM (PARALLEL TO GRAIN)
E.	MODULUS OF ELASTICITY	E = 843,683 Kg/CM

200 0 200mm
SCALE: 1 = 10

UNLESS OTHERWISE NOTED, LINEAR DIMENSIONS SHOWN ARE IN MILLIMETERS.

SYMBOL	DESCRIPTION	DATE	APP.

Designed By: D. SMITH
Drawn By: D. SMITH
Checked By: M. THOMPSON
Date: 10 MAY 2007
File No. AF0707
I.S.O. Sheet File Name: AF0707FB-SS000T.DWG
Solicitation Number: -

US Army Corps of Engineers Transatlantic Programs Center

ANA REGIONAL BRIGADE
PAKTIKA, AFGHANISTAN
RANGES
AMMUNITION STORAGE BUILDING
GENERAL NOTES

SHEET REFERENCE NUMBER:
FB-SS-00

$DATE$
$FILE$

D SIZE BORDER
32 X 20.5

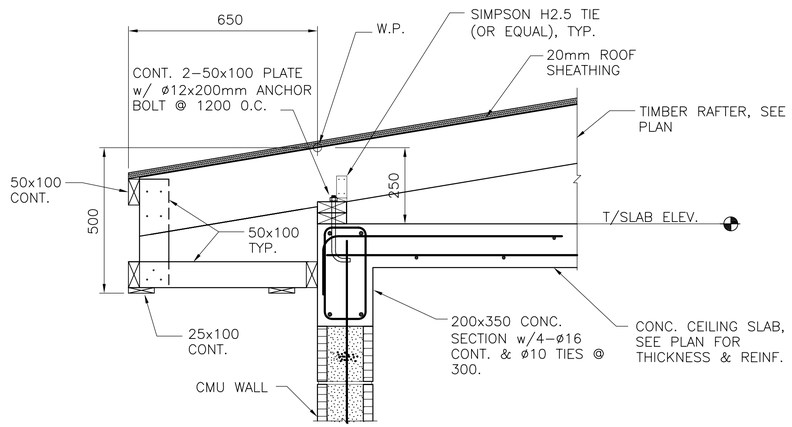

1 ROOF SECTION THROUGH EXTERIOR CMU WALL

FB–S–01 REF. SCALE: 1:10

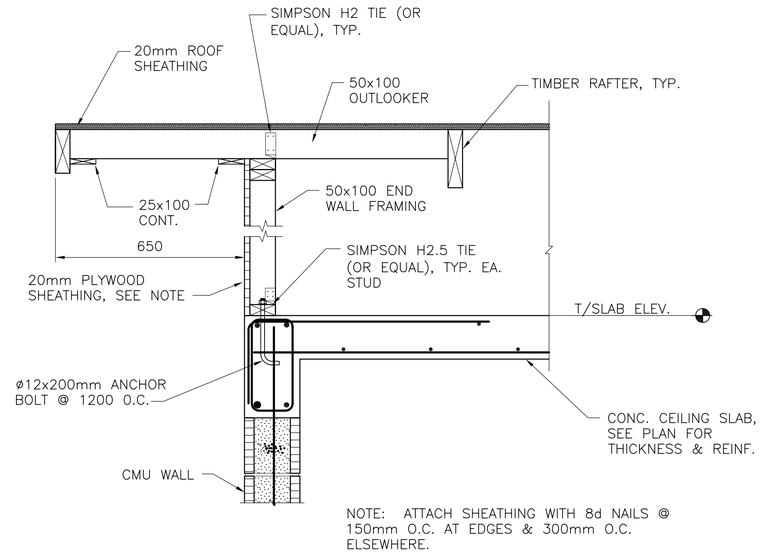

NOTE: ATTACH SHEATHING WITH 8d NAILS @ 150mm O.C. AT EDGES & 300mm O.C. ELSEWHERE.

2 ROOF SECTION THROUGH EXTERIOR CMU WALL

FB–S–01 REF. SCALE: 1:10

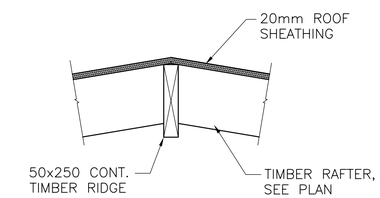

3 ROOF SECTION THROUGH RIDGE BEAM

FB–S–01 REF. SCALE: 1:10

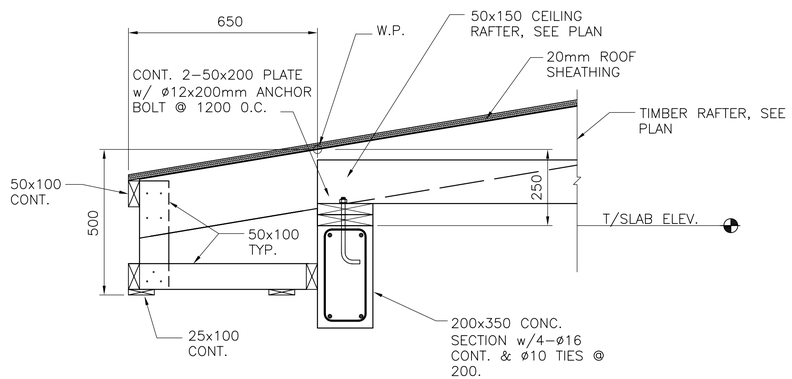

3 ROOF SECTION THROUGH CANOPY BEAM

FB–S–01 REF. SCALE: 1:10

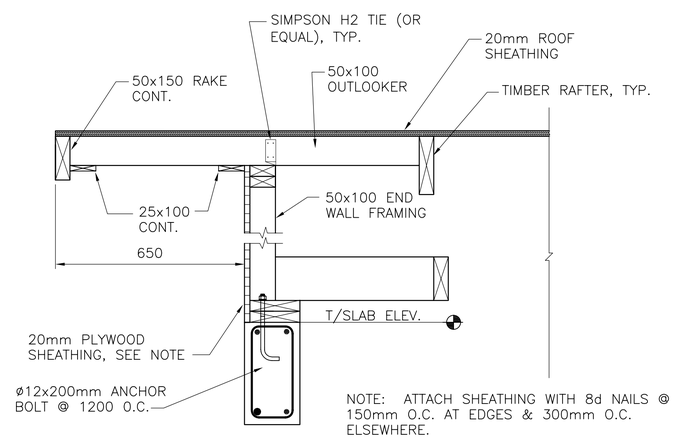

NOTE: ATTACH SHEATHING WITH 8d NAILS @ 150mm O.C. AT EDGES & 300mm O.C. ELSEWHERE.

4 ROOF SECTION THROUGH CANOPY BEAM

FB–S–01 REF. SCALE: 1:10

200 0 200mm
SCALE: 1 = 10

UNLESS OTHERWISE NOTED, LINEAR DIMENSIONS SHOWN ARE IN MILLIMETERS.

SYMBOL	DESCRIPTION	DATE	APR

Designed By: D. SMITH
Date: 10 MAY 2007
Drawn By: D. SMITH
File No. AF0707
Checked By: M. THOMPSON
I.S.O. Sheet File Name: AF0707FB–SF03SE.DWG
Solicitation Number: –

US Army Corps of Engineers Transatlantic Programs Center

ANA REGIONAL BRIGADE
PAKTIKA, AFGHANISTAN
RANGES
AMMUNITION STORAGE BUILDING

ROOF FRAMING SECTIONS

SHEET REFERENCE NUMBER:
FB–S–03

$DATE$
$FILE$

D SIZE BORDER
32 X 20.5

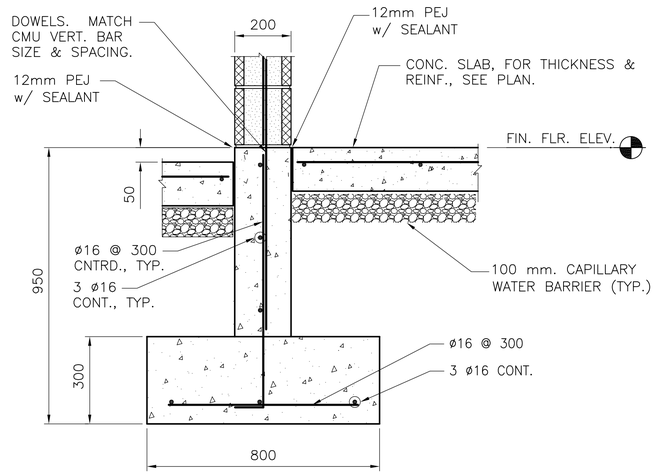

1 SECTION AT COVERED CANOPY WALL

FB-S-01 REF. SCALE: 1:10

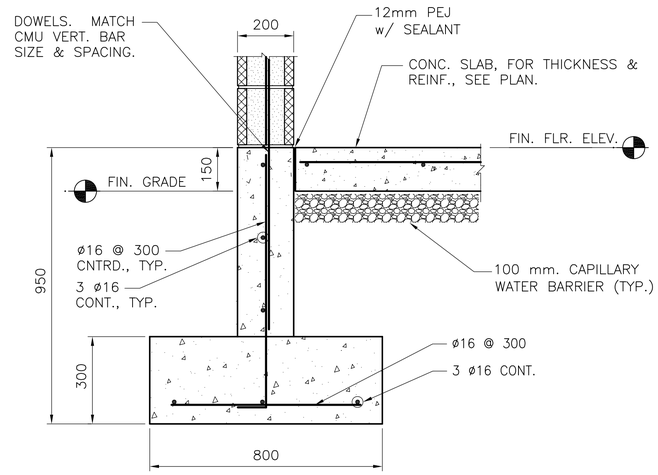

2 SECTION AT EXTERIOR CMU WALL

FB-S-01 REF. SCALE: 1:10

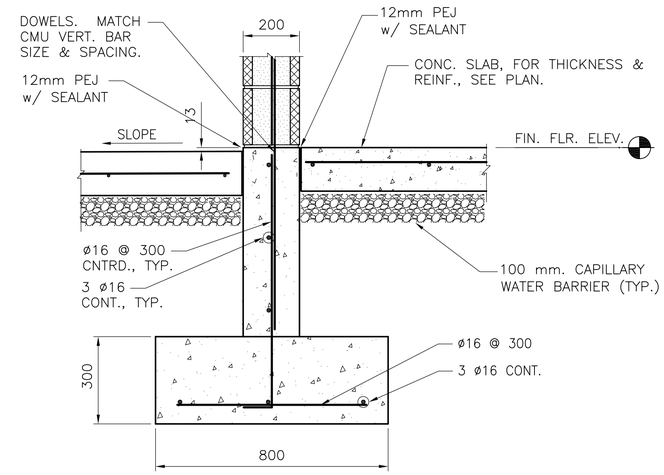

3 SECTION AT EXTERIOR DOOR

FB-S-01 REF. SCALE: 1:10

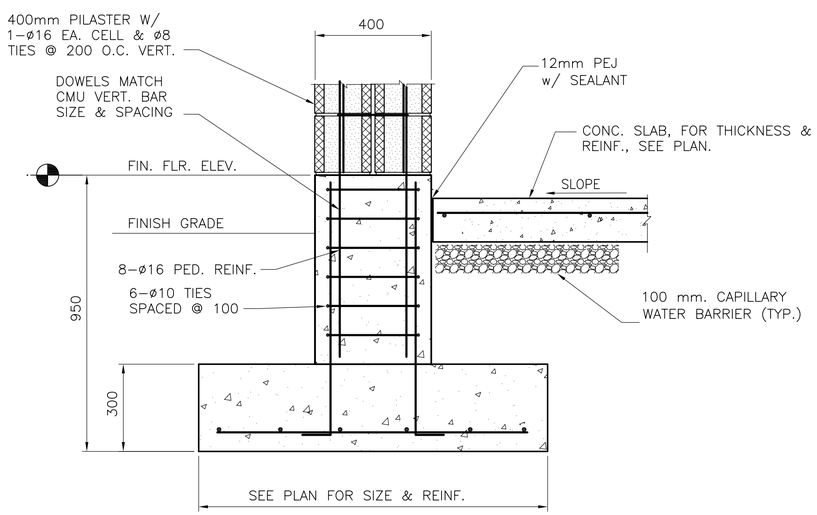

4 SECTION AT CONCRETE CANOPY PIER

FB-S-01 REF. SCALE: 1:10

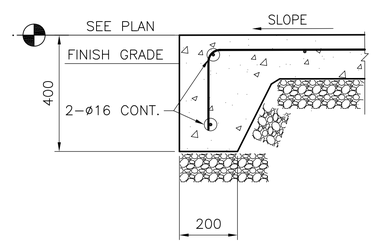

5 SECTION AT THICKENED SLAB EDGE

FB-S-01 REF. SCALE: 1:10

200 0 200mm
SCALE: 1 = 10

UNLESS OTHERWISE NOTED, LINEAR DIMENSIONS SHOWN ARE IN MILLIMETERS.

SYMBOL	DESCRIPTION	DATE	APR

Designed By: D. SMITH
Date: 10 MAY 2007
Drawn By: D. SMITH
File No. AF0707
Checked By: M. THOMPSON
I.S.O. Sheet File Name: AF0707FB-SF02SE.DWG
Solicitation Number: –

US Army Corps of Engineers Transatlantic Programs Center

ANA REGIONAL BRIGADE
PAKTIKA, AFGHANISTAN
RANGES
AMMUNITION STORAGE BUILDING

FOUNDATION SECTIONS

SHEET REFERENCE NUMBER:
FB-S-02

$DATE$
$FILE$

D SIZE BORDER
32 X 20.5

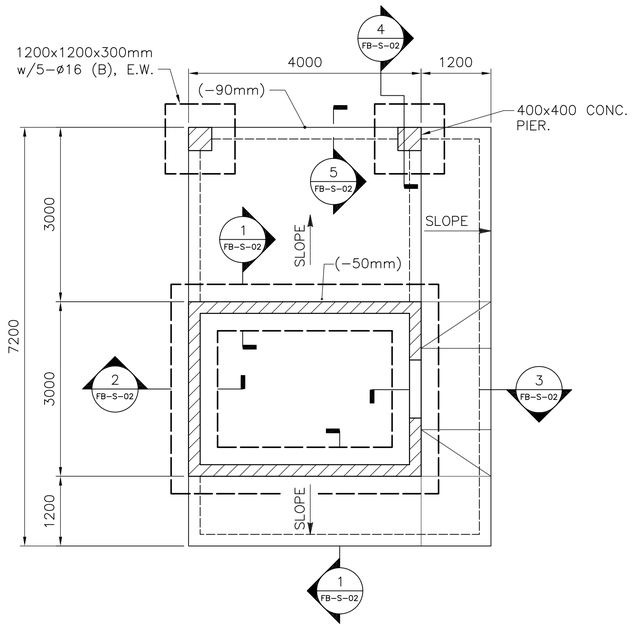

1 FOUNDATION PLAN

FB-S-01 | REF. | SCALE: 1:50

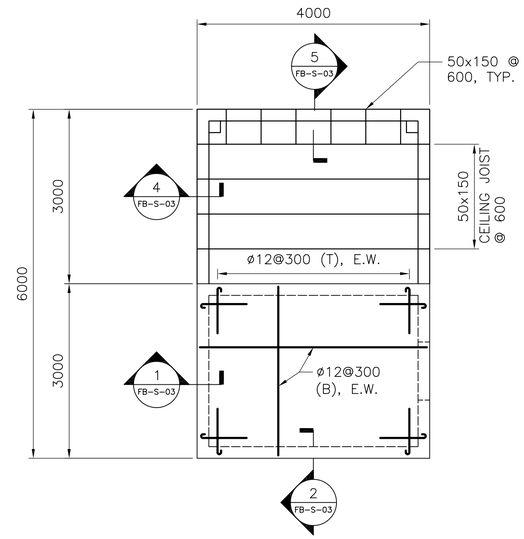

2 CEILING FRAMING PLAN

FB-S-01 | REF. | SCALE: 1:50

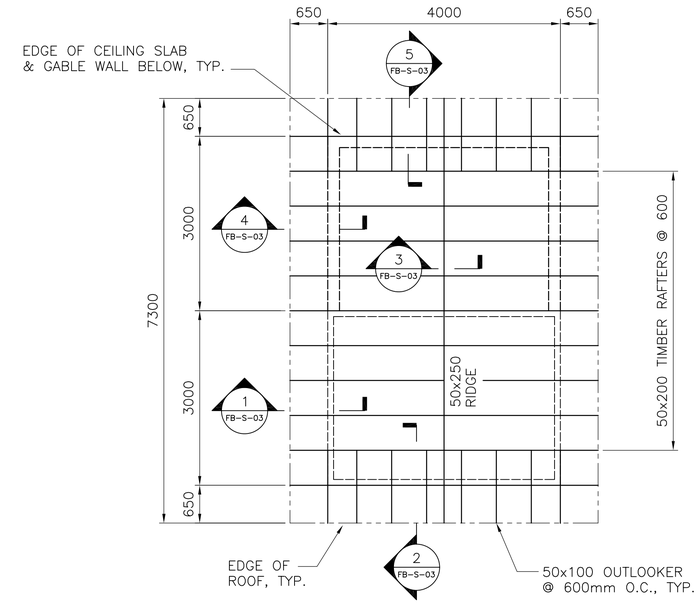

3 ROOF FRAMING PLAN

FB-S-01 | REF. | SCALE: 1:50

FOUNDATION NOTES:

1. CMU WALL REINFORCEMENT SHALL BE ø16 @ 400 U.N.O. GROUT VERTICAL CELLS WITH REINFORCEMENT.

2. TOP OF FOOTING ELEVATION SHALL BE 650mm B.F.F.

3. REFER TO SHEET FB-SS-01 AND 02 FOR TYPICAL MASONRY DETAILS.

4. REFER TO SHEET FB-SS-03 FOR TYPICAL SLAB ON GRADE DETAILS.

5. REFER TO SHEET FB-SS-04 FOR TYPICAL EXTERIOR CONCRETE PAD DETAILS.

6. SLAB ON GRADE SHALL BE 150mm CONCRETE ON A 100mm CAPILLARY WATER BARRIER. SEE SHEET FB-SS-03 FOR TYPICAL SLAB REINFORCEMENT.

CEILING FRAMING NOTES:

1. TOP OF CEILING SLAB ELEVATION SHALL BE 2950mm A.F.F.

2. CEILING SLAB THICKNESS SHALL BE 150mm.

ROOF FRAMING NOTES:

1. ROOF SLOPE SHALL BE 2 ON 12.

2. EXTERIOR ROOF SHEATHING SHALL HAVE A MINIMUM THICKNESS OF 20mm.

1000 0 1000mm
SCALE: 1 = 50

UNLESS OTHERWISE NOTED, LINEAR DIMENSIONS SHOWN ARE IN MILLIMETERS.

SYMBOL	DESCRIPTION	DATE	APR

Designed By: D. SMITH
Date: 10 MAY 2007
Drawn By: D. SMITH
File No. AF0707
Checked By: M. THOMPSON
I.S.O. Sheet File Name: AF0707FB-SF01PN.dwg
Solicitation Number: -

US Army Corps of Engineers Transatlantic Programs Center

ANA REGIONAL BRIGADE
PAKTIKA, AFGHANISTAN
RANGES
AMMUNITION STORAGE BUILDING

FOUNDATION, CEILING, & ROOF PLANS

SHEET REFERENCE NUMBER:
FB-S-01

$DATE$
$FILE$

D SIZE BORDER
32 X 20.5

ROOM FINISH SCHEDULE

ROOM	FLOOR	BASE	WALLS	CEILING	REMARKS
100	SEALED CONCRETE	NONE	PAINTED CEMENT STUCCO	PLYWOOD CEILING & EXP. STRUCT.(PAINTED)	MATCH STUCCO COLOR
101	SEALED CONCRETE	NONE	CMU EXPOSED	EXPOSED CONCRETE (PAINTED)	

GRAPHIC SCALE:

200 0 200mm

SCALE: 1 = 10

UNLESS OTHERWISE NOTED, LINEAR DIMENSIONS SHOWN ARE IN MILLIMETERS.

SYMBOL	DESCRIPTION	DATE	APP.

Designed By: R. BROWN
Drawn By: D. GRIFFIN
Checked By: R. BROWN
B. THOMAS

Date: 10 MAY 2007
File No. AF0707
I.S.O. Sheet File Name: AF0707FB-AR06SC.dwg
Solicitation Number: –

US Army Corps of Engineers
Transatlantic Programs Center

ANA REGIONAL BRIGADE
PAKTIKA, AFGHANISTAN
RANGES
AMMUNITION STORAGE BUILDING
FINISH SCHEDULE AND MISCELLANEOUS DETAILS

SHEET REFERENCE NUMBER:
FB–A–06

$DATE$
$FILE$

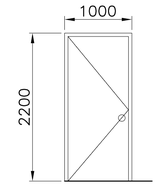

1 DOOR (D1)
SCALE: 1:40

1A DOOR (D1A) 20–MIN. FIRE RATED
SCALE: 1:40

1B DOOR (D1B) 45–MIN. FIRE RATED
SCALE: 1:40

1C DOOR (D1C) INSULATED
SCALE: 1:40

1D DOOR (D1D) 90–MIN. FIRE RATED
SCALE: 1:40

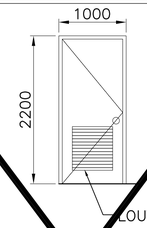

2 DOOR (D2)
SCALE: 1:40

2A DOOR (D2A) 20–MIN. FIRE RATED
SCALE: 1:40

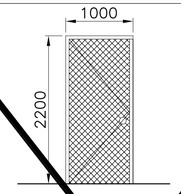

3 DOOR (D3)
SCALE: 1:40

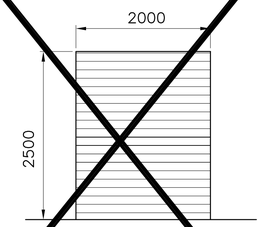

4 DOOR (D4)
SCALE: 1:40

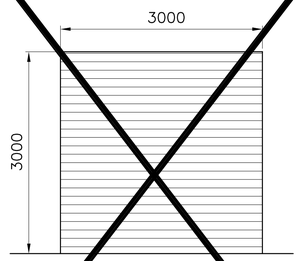

5 DOOR (D5)
SCALE: 1:40

5A DOOR (D5A)
SCALE: 1:40

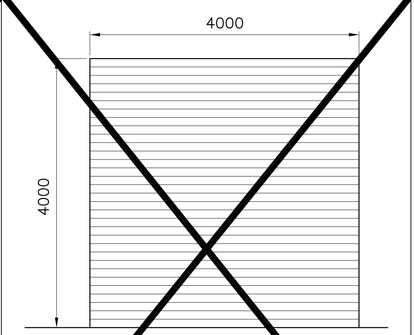

6 DOOR (D6)
SCALE: 1:40

6A DOOR (D6A)
SCALE: 1:40

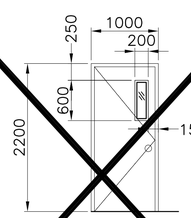

7 DOOR (D7)
SCALE: 1:40

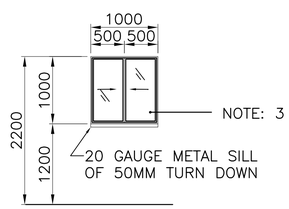

8 WINDOW (W1)
SCALE: 1:40

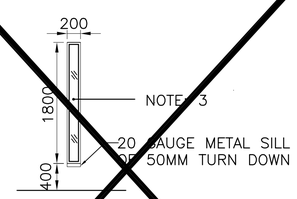

9 WINDOW (W2)
SCALE: 1:40

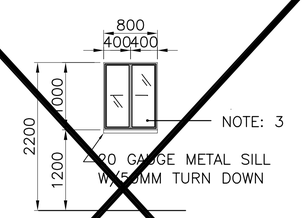

10 WINDOW (W3)
SCALE: 1:40

DOOR SCHEDULE

DOOR NO.	DIMENSION WIDTH	DIMENSION HEIGHT	PANEL NUMBER	OPENING SYSTEM	HDWR. NO.	MATERIAL
~~D1~~	~~1000~~	~~2200~~	~~1~~	~~HINGED~~	~~—~~	HM DOOR IN HM FRAME
~~D1A~~	~~1000~~	~~2200~~	~~1~~	~~HINGED~~	~~—~~	HM DOOR IN HM FRAME; 20 MIN FIRE RATED
~~D1B~~	~~1000~~	~~2200~~	~~1~~	~~HINGED~~	~~—~~	HM DOOR IN HM FRAME; 45 MIN FIRE RATED
~~D1C~~	~~1000~~	~~2200~~	~~1~~	~~HINGED~~	~~—~~	HM DOOR IN HM FRAME; INSULATED
D1D	1000	2200	1	HINGED	–	HM DOOR IN HM FRAME; 90 MIN FIRE RATED
~~D2~~	~~3000~~	~~3000~~	~~1~~	~~HINGED~~	~~—~~	HM DOOR IN HM FRAME W/ LOUVER
~~D2A~~	~~3000~~	~~4000~~	~~1~~	~~HINGED~~	~~—~~	HM DOOR IN HM FRAME W/ FIRE DAMPER FUSIBLE LINK LOUVER 20 MIN FIRE RATED
~~D3~~	~~1000~~	~~2200~~	~~1~~	~~HINGED~~	~~—~~	WELDED WIRE MESH IN STEEL FRAME
~~D4~~	~~2000~~	~~2500~~	~~1~~	~~ROLL UP~~	~~—~~	STEEL DOOR & FRAM, MANUALLY OPERATED, INSULATED
~~D5~~	~~3000~~	~~3000~~	~~1~~	~~ROLL UP~~	~~—~~	STEEL DOOR & FRAM, MANUALLY OPERATED, INSULATED
~~D5A~~	~~3000~~	~~3000~~	~~1~~	~~ROLL UP~~	~~—~~	STEEL DOOR & FRAM, MANUALLY OPERATED, UNINSULATED
~~D6~~	~~4000~~	~~4000~~	~~1~~	~~ROLL UP~~	~~—~~	STEEL DOOR & FRAM, MANUALLY OPERATED, INSULATED
~~D6A~~	~~4000~~	~~4000~~	~~1~~	~~ROLL UP~~	~~—~~	STEEL DOOR & FRAM, MANUALLY OPERATED, INSULATED
~~D7~~	~~1000~~	~~2200~~	~~1~~	~~HINGED~~	~~—~~	HM DOOR IN HM FRAME W/ LAMINATED GLAZING

WINDOW SCHEDULE

WINDOW NUMBER	DIMENSION WIDTH	DIMENSION HEIGHT	DIMENSION SILL HEIGHT	PANEL NUMBER	OPENING SYSTEM	DESCRIPTION
W1	1000	1000	1700	2	SLIDING	ALUM. PANELS W/TRANSPARENT 6MM GLASS METAL SILL AND FIXED INSECT METAL SCREEN
~~W2~~	~~200~~	~~1800~~	~~400~~	~~1~~	~~FIXED~~	~~ALUM. PANELS W/6MM WIRE GLASS~~
~~W3~~	~~800~~	~~1000~~	~~1700~~	~~2~~	~~SLIDING~~	~~ALUM. PANELS W/TRANSPARENT 6MM GLASS METAL SILL AND FIXED INSECT METAL SCREEN~~

NOTES:

1. FOR HARDWARE SET DESCRIPTION SEE SPECIFICATIONS SECTION.
2. ITEMS BLOCKED OUT, OR LINED THROUGH, DO NOT APPLY TO THIS FACILITY.
3. ALL GLAZING SHALL BE LAMINATED.

GRAPHIC SCALE:

200 0 200mm
SCALE: 1 = 10

UNLESS OTHERWISE NOTED, LINEAR DIMENSIONS SHOWN ARE IN MILLIMETERS.

SYMBOL	DESCRIPTION	DATE	APP.

Designed By: R. BROWN
Drawn By: D. GRIFFIN
Checked By: R. BROWN
Date: 10 MAY 2007
File No. AF0707
I.S.O. Sheet File Name: AF0707FB–AR05SC.dwg
Solicitation Number: –
B. THOMAS

US Army Corps of Engineers Transatlantic Programs Center

ANA REGIONAL BRIGADE
PAKTIKA, AFGHANISTAN
RANGES
AMMUNITION STORAGE BUILDING
DOOR & WINDOW SCHEDULES

SHEET REFERENCE NUMBER:
FB–A–5

$DATE$
$FILE$

D SIZE BORDER

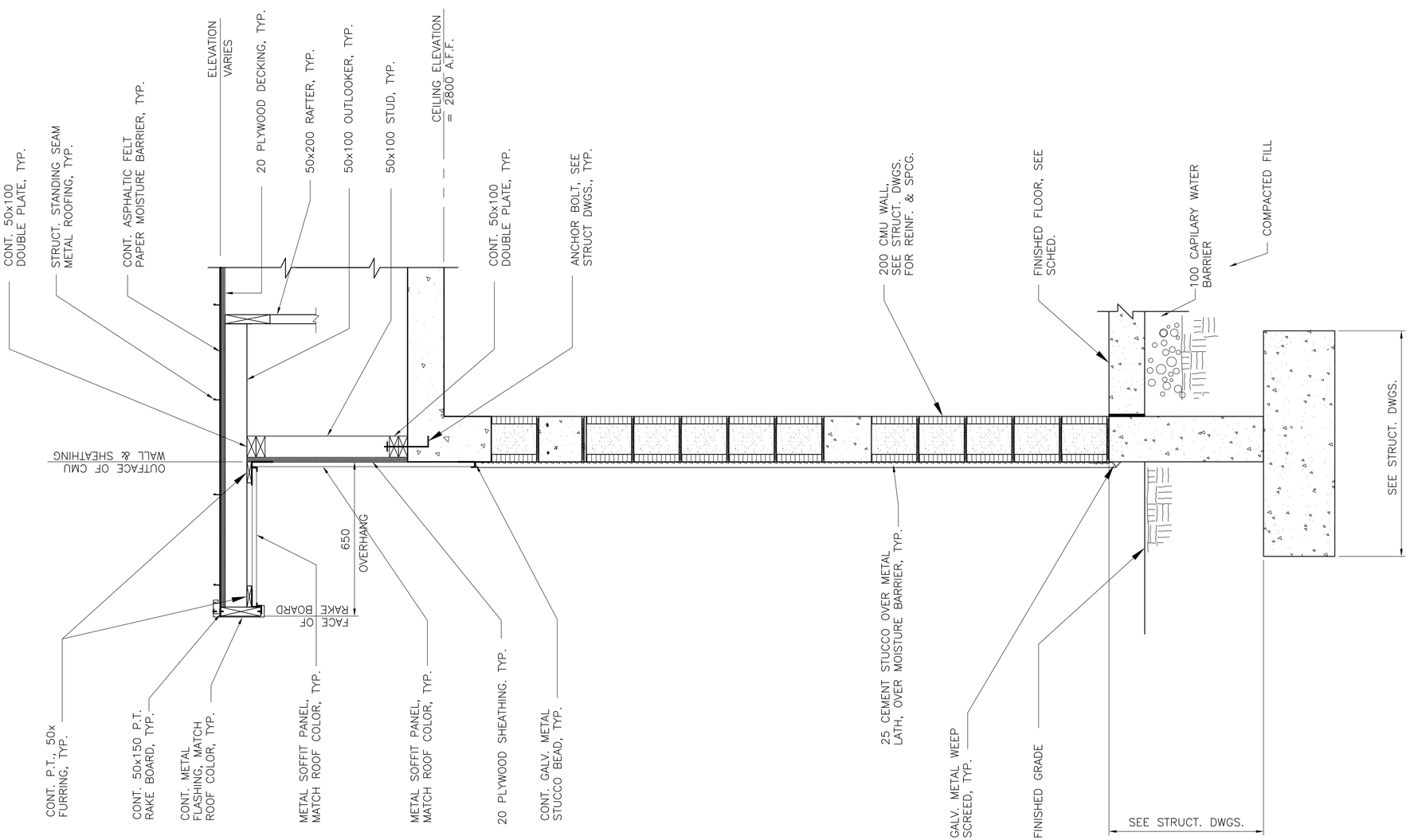

B | SECTION
FB-A-01 REF.

SCALE: 1:10

GRAPHIC SCALE:

200 0 200mm
SCALE: 1 = 10

UNLESS OTHERWISE NOTED, LINEAR DIMENSIONS SHOWN ARE IN MILLIMETERS.

SYMBOL	DESCRIPTION	DATE	APP.

Designed By: D. GRIFFIN
Date: 10 MAY 2007
Drawn By: D. GRIFFIN
File No. AF0707
Checked By: D. SMITH
I.S.O. Sheet File Name: AF0707FB-AR04SE.dwg
D. GREEN
Solicitation Number: –

US Army Corps of Engineers Transatlantic Programs Center

ANA REGIONAL BRIGADE
PAKTIKA, AFGHANISTAN
RANGES
AMMUNITION STORAGE BUILDING
SECTION

SHEET REFERENCE NUMBER:
FB–A–04

$DATE$
$FILE$

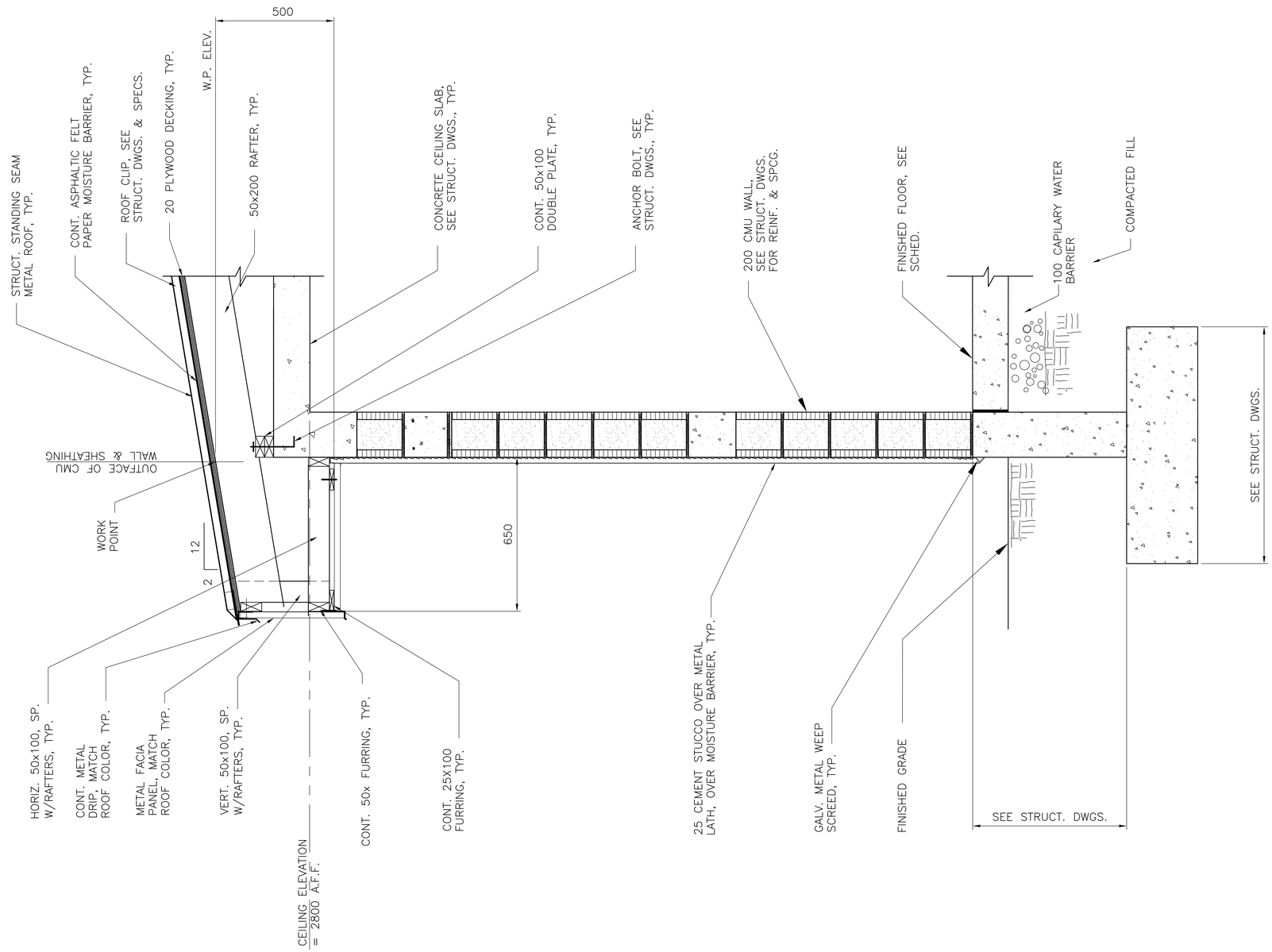

A | SECTION
FB-A-01 REF.

SCALE: 1:10

GRAPHIC SCALE:

200 0 200mm
SCALE: 1 = 10

UNLESS OTHERWISE NOTED, LINEAR DIMENSIONS SHOWN ARE IN MILLIMETERS.

SYMBOL	DESCRIPTION	DATE	APP.

Designed By: D. SMITH
Drawn By: T. MILLER
Checked By: D. SMITH
Date: 10 MAY 2007
File No. AF0707
I.S.O. Sheet File Name: AF0707FB-AR03SE.dwg
Solicitation Number: –

US Army Corps of Engineers Transatlantic Programs Center

ANA REGIONAL BRIGADE
PAKTIKA, AFGHANISTAN
RANGES
AMMUNITION STORAGE BUILDING

SECTION

SHEET REFERENCE NUMBER:
FB–A–03

$DATE$
$FILE$

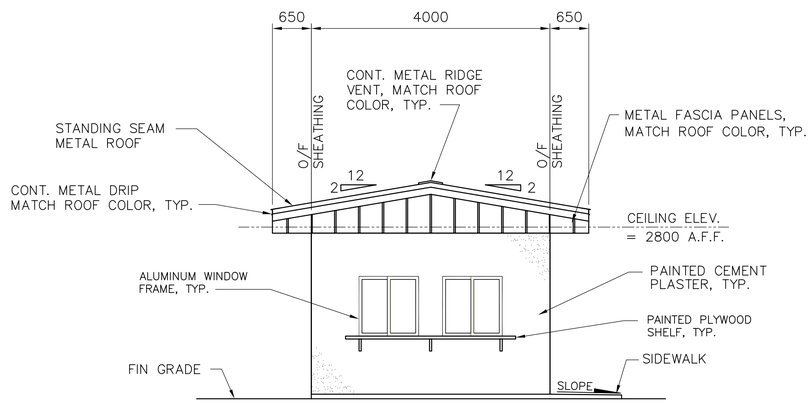

3 ELEVATION

CB-A-01 REF. SCALE: 1:50

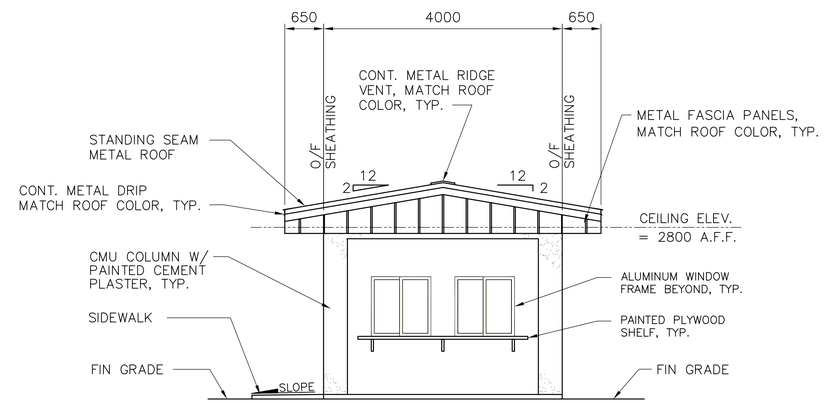

4 ELEVATION

CB-A-01 REF. SCALE: 1:50

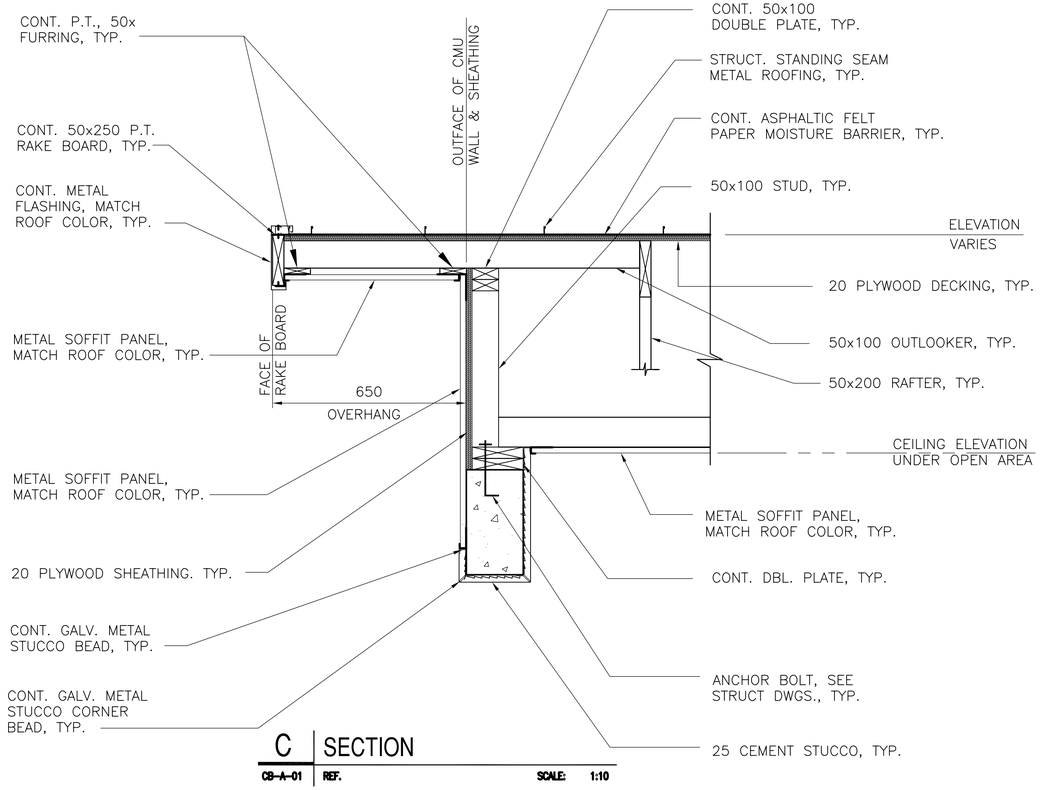

C SECTION

CB-A-01 REF. SCALE: 1:10

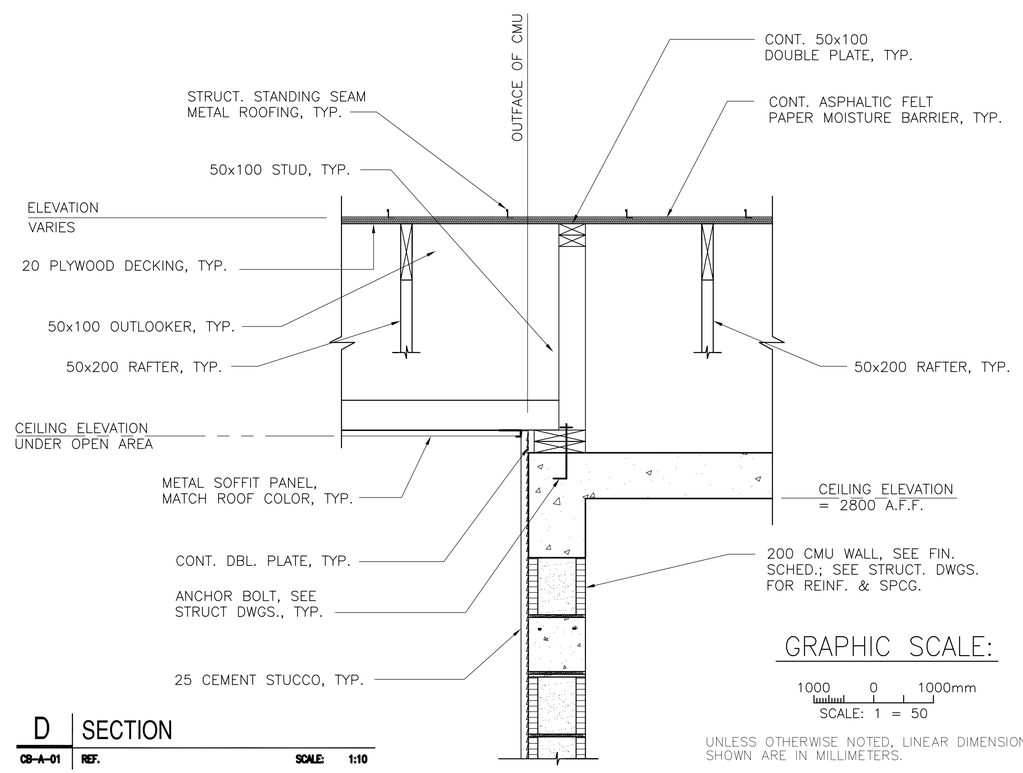

D SECTION

CB-A-01 REF. SCALE: 1:10

GRAPHIC SCALE:

1000 0 1000mm

SCALE: 1 = 50

UNLESS OTHERWISE NOTED, LINEAR DIMENSIONS SHOWN ARE IN MILLIMETERS.

SYMBOL	DESCRIPTION	DATE	APP.

Designed By: D. SMITH
Drawn By: T. MILLER
Checked By: D. SMITH
Date: 10 MAY 2007
File No. AF0707
I.S.O. Sheet File Name: AF0707FB-AR02EL.dwg
Solicitation Number: –

US Army Corps of Engineers Transatlantic Programs Center

ANA REGIONAL BRIGADE
PAKTIKA, AFGHANISTAN
RANGES
AMMUNITION STORAGE BUILDING

ELEVATIONS AND SECTIONS

SHEET REFERENCE NUMBER:
FB-A-02

$DATE$
$FILE$

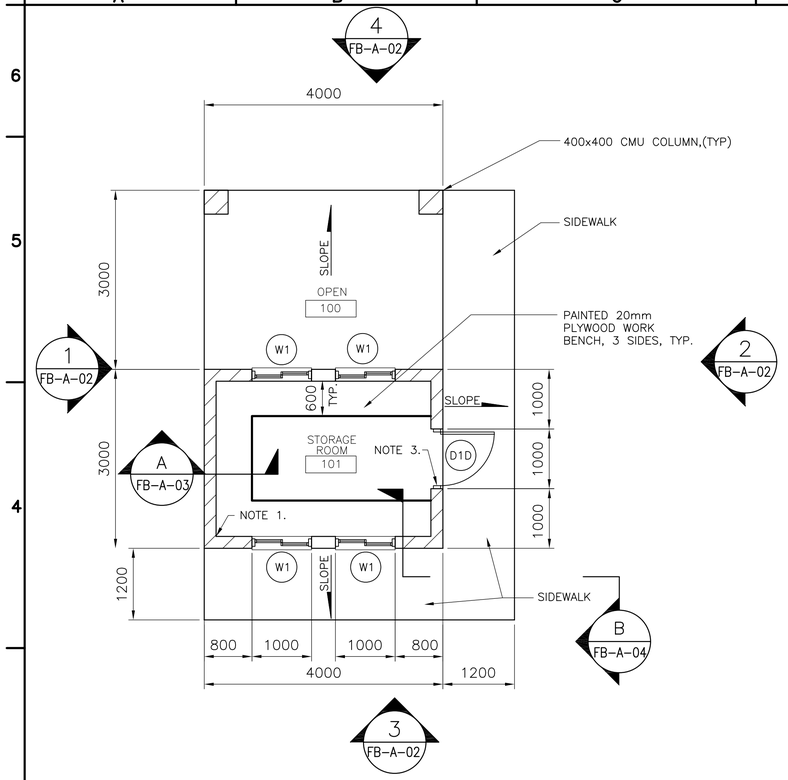

FLOOR PLAN

SCALE: 1:50

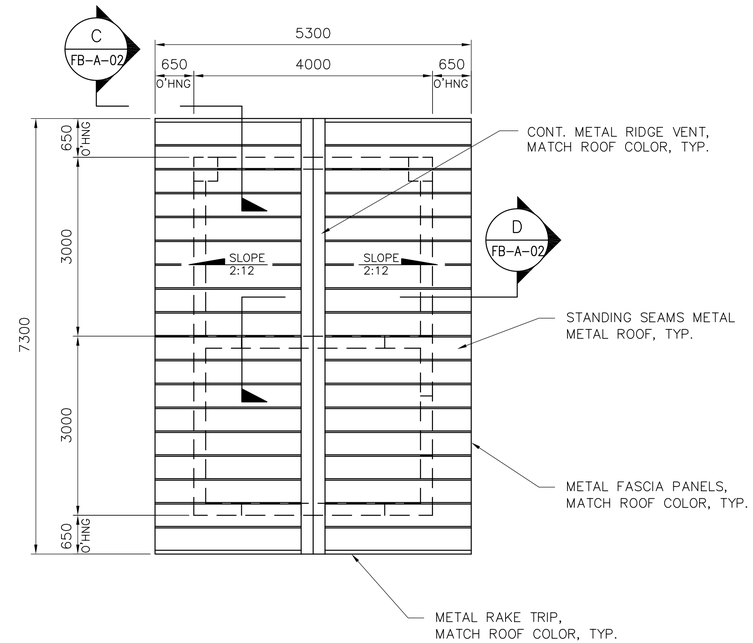

ROOF PLAN

SCALE: 1:50

WALL SYMBOL:

CMU WALL

NOTES:

1– ALL WALLS ARE 200MM THK. CMU UNLESS NOTED OTHERWISE.

2– ALL WALLS TERMINATE AT CEILING UNLESS NOTED OTHERWISE. REF. STRUCT. DRWGS.

3– ALL DOOR JAMBS ARE 200MM UNLESS OTHERWISE NOTED.

4– ALL DIMENSIONS ARE TO FACE OF CMU UNLESS NOTED OTHERWISE.

5– ALL VERTICAL DIMENSIONS & LEVELS ARE FROM GROUND FLOOR FINISHED SLAB. THIS ELEVATION IS +0000.

6– NOT USED.

7– SEE STRUCTURAL DRAWINGS FOR LOCATION OF BUILDING CONTROL, EXPANSION AND SEISMIC JOINTS.

8– ALL HVAC OPENINGS DIMENSION SHALL BE VERIFIED WITH APPROVED SUBMITTALS.

SYMBOL	DESCRIPTION	DATE	APP.

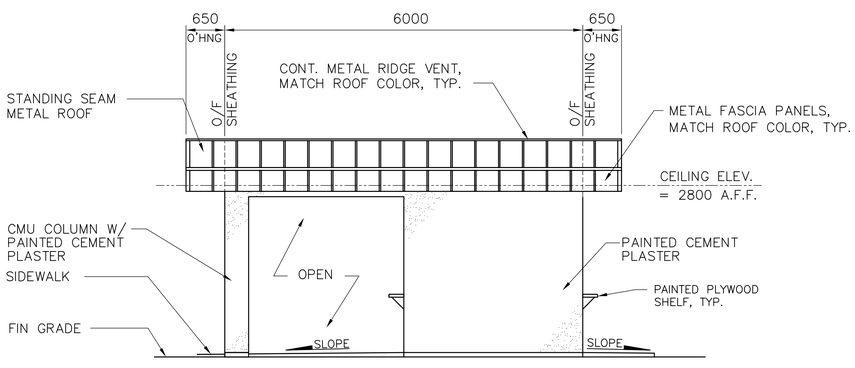

1 ELEVATION

CB-A-01 REF. SCALE: 1:50

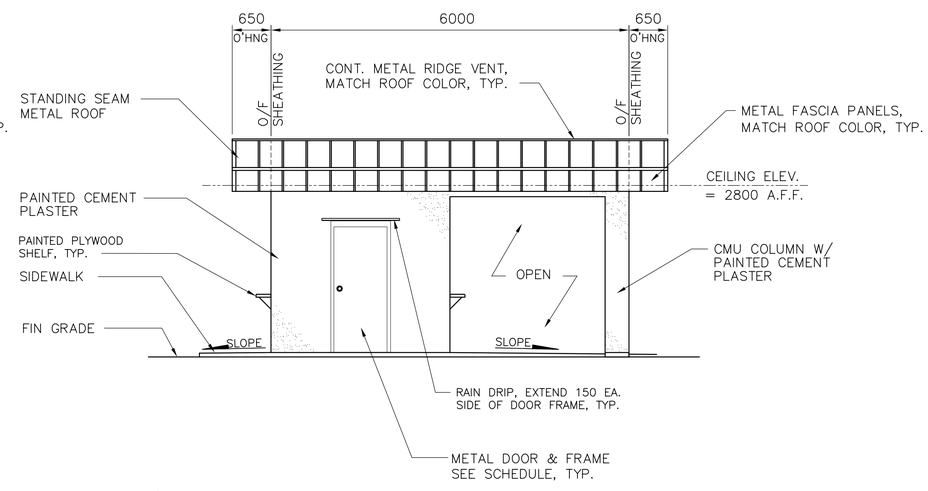

2 ELEVATION

CB-A-01 REF. SCALE: 1:50

GRAPHIC SCALE:

1000 0 1000mm

SCALE: 1 = 50

UNLESS OTHERWISE NOTED, LINEAR DIMENSIONS SHOWN ARE IN MILLIMETERS.

Designed By: D. SMITH
Drawn By: T. MILLER
Checked By: D. GRIFFIN
D. GREEN
Date: 10 MAY 2007
File No. AF0707
I.S.O. Sheet File Name: AF0707FB-AR01PN.dwg
Solicitation Number: –

US Army Corps of Engineers Transatlantic Programs Center

ANA REGIONAL BRIGADE
PAKTIKA, AFGHANISTAN
RANGES
AMMUNITION STORAGE BUILDING
PLANS
FLOOR AND ROOF AND NOTES

SHEET REFERENCE NUMBER:
FB–A–01

$DATE$
$FILE$

ARCHITECTURAL ABBREVIATIONS

A	
ABOVE FINISH FLOOR	AFF
ACCESS PANEL	AP
ACOUSTIC	ACOUS (ACST)
ACTIVE LEAF	A/L
AGGREGATE	AGG
AIR CONDITIONING	A/C
ALUMINUM	ALUM (AL)
ANCHOR BOLT	AB
AND	&
ANGLE	∠ (ANG)
ARCHITECTURAL	ARCH
AREA INLET	AI.
ASPHALT	ASPH
AT	@
AUTOMATIC	AUTO
B	
BACK OF WALL	BOW
BATTEN INSULATION	BATT INSUL
BEAM	BM
BEARING	BRG
BITUMINOUS	BIT (BITUM)
BLOCK	BLK
BLOCKING	BLKG
BOARD	BD
BOTTOM	BOT (BOTT)
BRACING	BRCG
BRACKET	BRKT
BUILDING	BLDG
C	
CABINET	CAB
CAST IRON	CI
CATCH BASIN	CB
CEILING	CLG
CEMENT	CEM
CENTER	CTR
CENTER LINE	℄ OR CL
CENTER TO CENTER	CC
CERAMIC TILE	CT
CIRCULAR	CIR
CLEANOUT	CO
CLEAR	CLR
CLOSET	CLO
COLUMN	COL
CONCRETE	CONC
CONCRETE MASONRY UNITS	CMU
CONNECTION	CONN
CONSTRUCTION	CONSTR
CONSTRUCTION JOINT	CONSTR JT
CONTINUOUS	CONT.
CONTROL JOINT	CJ
CORNER	COR
CORRIDOR	CORR
COUNTER	CNTR
COUNTER SUNK	CSK
D	
DAMPPROOFING	DP
DETAIL	DET (DETL)
DIAGONAL	DIAG
DIAMETER	DIA
DIMENSION	DIM
DISPENSER	DISP
DOOR	DR
DOUBLE	DBL
DOWN	DN
DRAWER	DWR
DRAWING	DWG
DRINKING FOUNTAIN	DF
E	
EACH	EA
ELECTRICAL OR ELECTRIC	ELEC
ELEVATION	EL.
EMERGENCY	EMERG
ENCLOSURE	ENCL
ENTRANCE	ENTR
EQUIPMENT	EQUIP (EQPT)
EQUAL	EQ
EXHAUST	EXH
EXISTING	EXIST.
EXPANSION	EXPN
EXPANSION JOINT	EJ (EXP JT)
EXTERIOR	EXT
F	
FACE OF CONCRETE	FOC
FACE OF FINISH	FOF
FACE OF MASONRY	FOM
FACE OF WALL	FOW
FINISH	FIN.
FIRE HYDRANT	FH
FIXTURE	FIX
FLASHING	FLASH
FLOOR	FLR OR FL
FLOOR DRAIN	FD
FLOORING	FLG
FOOTING	FTG
FOUNDATION	FDN
FRAME	FR
FINISH FLOOR LINE	FFL
G	
GAGE OR GAUGE	GA
GALVANIZED	GALV
GALVANIZED IRON	GI
GAS	G
GRID LINE	GL
GLAZED WALL TILE	GWT
GRADE	GR
GROUND	GND
GROUND CLEANOUT	GCO
GYPSUM	GYP
GYPSUM WALLBOARD	GYP BD (GWB)
H	
HANDRAIL	HDR
HARDBOARD	HBD
HARDWARE	HDW (HW)
HEAD	HD
HEATER	HTR
HEIGHT	HT (HGT)
HIGH POINT	H.PT.
HOLLOW METAL	HM
HORIZONTAL	HORIZ
HOSE BIBB	HB
I	
INSIDE DIAMETER	I.D.
INSULATION	INSUL.
INTERIOR	INT (INTR)
J	
JANITOR	JAN
JOINT	JT
JOIST	JST
K	
KEY LOCK	KL
KICK PLATE	KP
L	
LABORATORY	LAB
LAMINATE	LAM
LAVATORY	LAV
LIGHT	LT
LIGHTING	LTG
LOW POINT	LP
LUMBER	LBR
LOUVER	LVR
M	
MACHINE	MACH
MAINTENANCE	MAINT
MASONRY OPENING	MO
MASONRY UNIT	MU
MASTIC	MSTC
MATERIAL	MATL
MAXIMUM	MAX
MECHANICAL	MECH
METAL	MET
METAL BUILDING MANUFACTURER	MBM
MINIMUM	MIN
MIRROR	MIR
MISCELLANEOUS	MISC
MONOLITHIC	MONO
N	
NORTH	N
NOT IN CONTRACT	NIC
NUMBER	NO. (#)
NOT TO SCALE	NTS
O	
OFFICE	OFF.
ON CENTER	OC
OPENING	OPNG
OPPOSITE	OPP
OUTSIDE DIAMETER	O.D.
P	
PANEL	PNL
PAPER TOWEL DISPENSER	PTD
PAPER TOWEL DISPENSER & RECEPTACLE	PTD/R
PAPER TOWEL RECEPTACLE	PTR
PARTITION	PRTN
PLASTER	PLAST
PLATE	PL OR P
PLUMBING	PLBG
PLYWOOD	PLY WD
PRECAST	PRCST
Q	
QUARRY TILE	Q.T.
QUARTERS	QTRS
R	
RADIUS	RAD
RECEPTACLE	RECP
REFERENCE	REF
REFRIGERATOR	REFR
REINFORCEMENT	REINF
REQUIRED	REQD
REVISIONS	REV
RISER	R
ROOFING	RFG
ROOM	RM
ROUGH	RGH
S	
SANITARY NAPKIN DISPENSER	SND
SANITARY NAPKIN RECEPTACLE	SNR
SCHEDULE	SCH
SEAT COVER DISPENSER	SCD
SERVICE SINK	SSK
SHEATHING	SHTHG
SHEET	SHT.
SHEET METAL	SHT. MET.
SHOWER	SHR
SIMILAR	SIM
SOAP DISPENSER	SD
SOLID CORE	SC
SOUTH	S
SPEAKER	SPKR
SPECIFICATION	SPEC
SPLASH BLOCK	SB
SQUARE	SQ OR □
STANDARD	STD
STEEL	STL
STORAGE	STOR
STRUCTURAL	STRL
SUSPENDED	SUSP
SYMMETRICAL	SYM
T	
TELEPHONE	TEL
TEMPERATURE	TEMP
TEMPERED GLASS	T
TERRAZZO	TER
THICK	THK
TOILET PAPER DISPENSER	TPD
TOP OF CONCRETE	TOC
TOP OF CURB	TC
TOP OF PAVEMENT	TP
TOP OF STEEL	TOS
TOP OF WALL	TW
TOPOGRAPHY	TOPO
TYPICAL	TYP
U	
UNLESS OTHERWISE NOTED	UON
URINAL	UR
V	
VENTILATOR	VENT
VENT THRU ROOF	VTR
VERTICAL	VERT
VESTIBULE	VEST
W	
WATER CLOSET	WC
WEIGHT	WT
WELDED WIRE FABRIC	WWF
WINDOW	W/
WITH	W/
WITHOUT	W/O
WOOD	WD

SYMBOLS

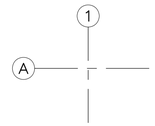

GRID LINES

DETAIL

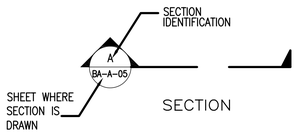

SECTION

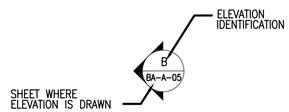

EXTERIOR ELEVATION

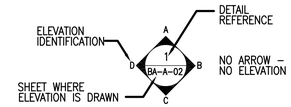

INTERIOR ELEVATION

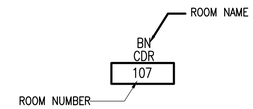

ROOM IDENTIFICATION

DOOR NUMBER

WINDOW NUMBER

LOUVER NUMBER

MATERIAL LEGEND

CONCRETE

CONCRETE MASONRY UNIT (CMU)

SAND, MORTAR

METAL STUD WALL

WOOD – FRAMING

WOOD BLOCKING

METAL

INSULATION, BATT

GYPSUM BOARD

WOOD – FINISH

GENERAL NOTES:

GENERAL

1. THE AMMO BREAKDOWN BUILDING PROVIDES SPACE FOR BREAKING DOWN AND ISSUING AMMUNITION TO THE PERSONNEL INVOLVED IN RANGE TRAINING EXCERCISES. A CANOPY IS PORVIDED AT ONE OF THE ISSUING WINDOWS TO PROTECT PERSONNEL DURING PERIODS OF INCLEMENT WEATHER. THE ENCLOSED AREA REQUIRED FOR THE AMMUNITION BREAKDOWN BUILDING IS 11 SQUARE METERS (120 SQUARE FEET).

SITE ADAPTATION

1. THIS STANDARD DEFINITIVE DESIGN SHOULD BE ADAPTED TO LOCAL CONDITIONS SUCH AS CLIMATE, AVAILABLE CONSTRUCTION MATERIALS AND TECHNIQUES, TOPOGRAPHY, SEISMIC ZONE AND THE EXISTING CHARACTER OF THE SURROUNDING BUILDINGS. THESE FACTORS MAY AFFECT PLANS, ELEVATIONS AND BUILDING SYSTEMS. THE BUILDING FOUNDATION MUST BE DESIGNED BASED ON THE RESULTS OF A GEOTECHNICAL INVESTIGATION.

REFERENCE CRITERIA

1. THE DESIGN AND CONSTRUCTION MUST COMPLY WITH APPLICABLE CODES AND STANDARDS INCLUDING: TECHNICAL INSTRUCTION TI 800–01, "DESIGN CRITERIA"; DEPARTMENT OF THE ARMY REGULATIONS, TECHNICAL MANUALS, HANDBOOKS, STANDARDS, AND SPECIFICATIONS.

FUNCTIONAL REQUIREMENTS

1. ALL DIMENSIONS NOT LABELED ARE IN MILLIMETERS. ISSUING WINDOWS ARE HOLLOW METAL DOOR PANELS SECURED WITH FLUSH BOLTS AND OVERLAPPING ASTRAGALS. WINDOWS HAVE FORCED ENTRY RESISTANT METAL FRAMES. GUTTERS, DOWNSPOUTS AND SPLASH BLOCKS SHOULD BE PROVIDED WHERE REQUIRED BY CLIMATIC CONDITIONS. ICE GUARDS MAY BE NECESSARY IN NORTHERN CLIMATES. CEILINGS SHOULD BE FINISHED. THE AMMO BREAKDOWN BUILDING IS ACCESSSED ONLY BY ABLE–BODIED PERSONNEL AND DOES NOT REQUIRE ADA COMPLIANCE UNLESS DICTAGED BY LOCAL CRITERIA.

MECHANICAL

1. NO MECHANICAL SYSTEMS ARE REQUIRED FOR THIS FACILITY.

ELECTRICAL

1. NO ELECTRICAL SYSTEMS ARE REQUIRED FOR THIS FACILITY.

UNLESS OTHERWISE NOTED, LINEAR DIMENSIONS SHOWN ARE IN MILLIMETERS.

SYMBOL	DESCRIPTION	DATE	APP.

Designed By: R. BROWN
Drawn By: D. GRIFFIN
Checked By: R. BROWN
B. THOMAS

Date: 10 MAY 2007
File No. AF0707
I.S.O. Sheet File Name: A0707FB–A001.dwg
Solicitation Number: –

US Army Corps of Engineers Transatlantic Programs Center

ANA REGIONAL BRIGADE
PAKTIKA, AFGHANISTAN
RANGES
AMMUNITION STORAGE BUILDING
ABBREVIATIONS & SYMBOLS AND GENERAL NOTES

SHEET REFERENCE NUMBER:
FB–A–00

$DATE$
$FILE$

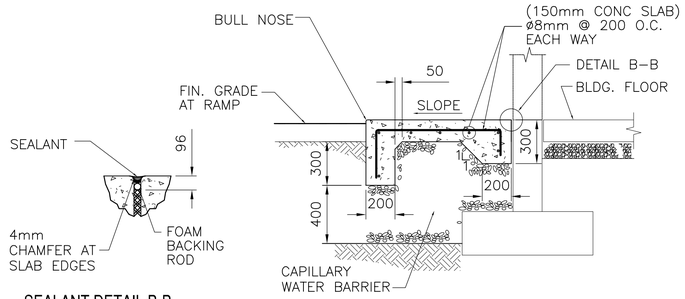

SEALANT DETAIL B-B

SECTION A-A

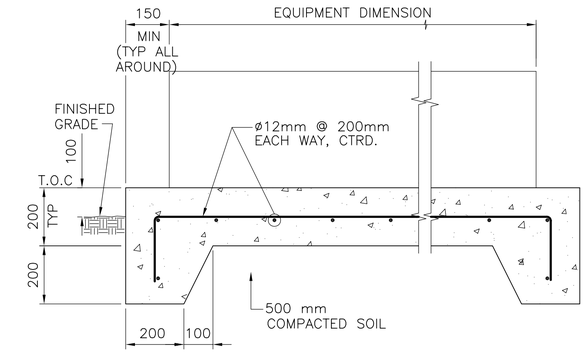

TYPICAL ALL AROUND PERIMETER

NOTE:
PAD DIMENSIONS, ANCHOR BOLT SIZE AND LOCATIONS, AND OTHER EMBEDDED ITEMS SHALL CONFORM TO EQUIPMENT MANUFACTURER'S REQUIREMENTS.

2 CONCRETE PAD FOR EXTERIOR EQUIPMENT

E-SS-04 REF. SCALE: 1:10

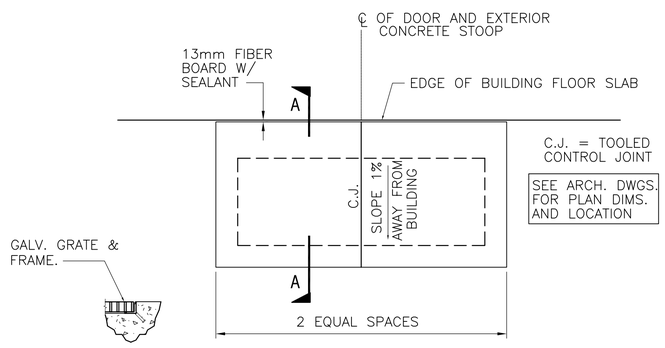

DETAIL D-D

EXTERIOR STOOPS

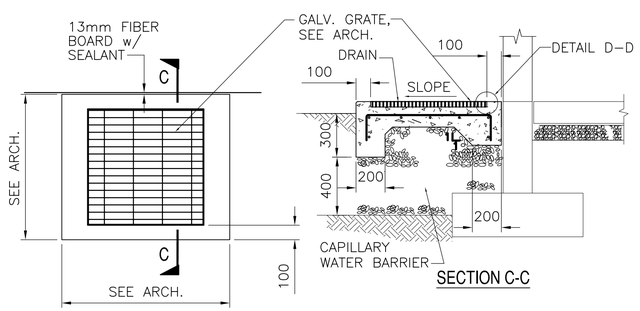

SECTION C-C

EXTERIOR STOOPS w/ GALVANIZED GRATE

1 CONCRETE STOOP/RAMP DETAILS

E-SS-04 REF. SCALE: 1:20

200 0 200mm
SCALE: 1 = 10

UNLESS OTHERWISE NOTED, LINEAR DIMENSIONS SHOWN ARE IN MILLIMETERS.

SYMBOL	DESCRIPTION	DATE	APR

Designed By: D. SMITH
Date: 10 MAY 2007
Drawn By: D. SMITH
File No. AF0707
Checked By: M. THOMPSON
I.S.O. Sheet File Name: AF0707FB-SS04DT.DWG
Solicitation Number: –

US Army Corps of Engineers Transatlantic Programs Center

ANA REGIONAL BRIGADE
PAKTIKA, AFGHANISTAN
RANGES
AMMUNITION STORAGE BUILDING

MISCELLANEOUS EXTERIOR CONCRETE PAD DETAILS

SHEET REFERENCE NUMBER:
FB-SS-04

$DATE$
$FILE$

D SIZE BORDER
32 X 20.5

DRAWING INDEX

SHT.REF. NO.	FILE NO.	REVISIONS REV. NO.	REVISIONS AM/COP NO.	TITLE
	AF0707--GI04GN			DRAWING INDEX SHEET 3
				CE – DEFAC 2 (CONTINUED)
CE-SS-04	AF0707CE-SS04DT			MISCELLANEOUS EXTERIOR CONCRETE PAD DETAILS
CE-GM-01	AF0707CE-MH01GN			HVAC LEGEND
CE-MH-01	AF0707CE-MH01PN			HVAC PLAN
CE-DM-01	AF0707CE-MH02GN			HVAC DETAILS
CE-DM-02	AF0707CE-MH03GN			HVAC DETAILS
CE-MK-01	AF0707CE-MK01PN			KITCHEN PLAN
CE-MK-02	AF0707CE-MH01GK			KITCHEN HOOD NOTES
CE-GP-01	AF0707CE-MP01GN			PLUMBING LEGEND AND DETAILS
CE-MP-01	AF0707CE-MP01PN			PLUMBING PLAN
CE-MP-02	AF0707CE-MP02LS			PLUMBING PLAN
CE-GE-01	AF0707CE-EL01GN			ELECTRICAL LEGEND AND NOTES
CE-GE-02	AF0707CE-EL02PN			ELECTRICAL FIXTURE SCHEDULE AND BRANCH CIRCUIT
CE-E-01	AF0707CE-EL01PN			ELECTRICAL LIGHTING PLAN
CE-E-02	AF0707CE-EL02PN			ELECTRICAL POWER PLAN
CE-DE-01	AF0707CE-EL01DT			ELECTRICAL DETAILS
CE-DE-02	AF0707CE-EL02DT			ELECTRICAL DETAILS
CE-DE-03	AF0707CE-EL03DT			ELECTRICAL DETAILS
CE-SE-01	AF0707CE-EL01SE			PANEL SCHEDULES AND DETAILS
				DB – MWR
DB-A-00	AF0707DB-AB01			ABBREVIATIONS & SYMBOLS
DB-A-01	AF0707DB-AR01PN			FLOOR PLAN
DB-A-03	AF0707DB-AR03PN			ROOF PLAN
DB-A-04	AF0707DB-AR04EL			ELEVATIONS
DB-A-05	AF0707DB-AR05EL			ELEVATIONS 3 & 4
DB-A-06	AF0707DB-AR06EL			BUILDING SECTION
DB-A-07	AF0707DB-AR07SE			WALL SECTION
DB-A-08	AF0707DB-AR08SE			WALL SECTION
DB-A-09	AF0707DB-AR09SE			INTERIOR WALL SECTION
DB-A-10	AF0707DB-AR10SC			WALL SECTION
DB-A-11	AF0707DB-AR11SC			DOOR & WINDOW SCHEDULE
DB-A-12	AF0707DB-AR12DT			DOOR & COLUMN DETAILS
DB-A-13	AF0707DB-AR13DT			MISCELLANEOUS DETAILS
DB-S-01	AF0707DB-SB01PN			FOUNDATION PLAN
DB-S-02	AF0707DB-SB02SE			FOUNDATION SECTIONS
DB-S-03	AF0707DB-SF03SE			THICKENED SLAB & FOUNDATION SECTIONS
DB-S-04	AF0707DB-SB04SE			COLUMN PEDESTAL DETAILS
DB-SS-00	AF0707DB-SS00DT			GENERAL NOTES
DB-SS-01	AF0707DB-SS01DT			TYPICAL MASONRY DETAILS
DB-SS-02	AF0707DB-SS02DT			TYPICAL MASONRY DETAILS
DB-SS-03	AF0707DB-SS03DT			TYPICAL SLAB ON GRADE DETAILS
DB-SS-04	AF0707DB-SS04DT			MISCELLANEOUS EXTERIOR CONCRETE PAD DETAILS
DB-GM-01	AF0707DB-MH01GN			HVAC LEGEND
DB-MH-01	AF0707DB-MH01PN			SMALL COMMUNITY CENTER HVAC PLAN
DB-DM-01	AF0707DB-MH02GN			HVAC DETAILS
DB-GP-01	AF0707DB-MP01GN			PLUMBING LEGEND AND DETAILS

SHT.REF. NO.	FILE NO.	REVISIONS REV. NO.	REVISIONS AM/COP NO.	TITLE
DB-MP-01	AF0707DB-MP01PN			PLUMBING PLAN
DB-MP-02	AF0707DB-MP02LS			PLUMBING RISERS
DB-GE-01	AF0707DB-EL01GN			ELECTRICAL LEGEND AND NOTES
DB-GE-02	AF0707DB-EL02GN			ELECTRICAL FIXTURE SCHEDULE AND BRANCH CIRCUIT
DB-E-01	AF0707DB-EL01PN			ELECTRICAL LIGHTING & POWER PLAN
DB-DE-01	AF0707DB-EL01DT			ELECTRICAL DETAILS
DB-DE-02	AF0707DB-EL02DT			ELECTRICAL DETAILS
DB-DE-03	AF0707DB-EL03DT			ELECTRICAL DETAILS
DB-SE-01	AF0707DB-EL01SE			PANEL SCHEDULES AND RISERS
				DC – DFAC 3
DC-A-00	AF0707DC-AR00GN			ABBREVIATIONS & SYMBOLS
DC-A-01	AF0707DC-AR01PN			FLOOR PLAN
DC-A-02	AF0707DC-AR02PN			ROOF PLAN
DC-A-03	AF0707DC-AR03PN			REFLECTED CEILING PLAN
DC-A-04	AF0707DC-AR04EL			EXTERIOR ELEVATIONS
DC-A-05	AF0707DC-AR05EL			EXTERIOR ELEVATIONS
DC-A-06	AF0707DC-AR06SE			BUILDING SECTION
DC-A-07	AF0707DC-AR07SE			WALL SECTION
DC-A-08	AF0707DC-AR08SE			WALL SECTION
DC-A-09	AF0707DC-AR09SE			WALL SECTION
DC-A-10	AF0707DC-AR10SE			WALL SECTION
DC-A-11	AF0707DC-AR11SE			INTERIOR WALL SECTION
DC-A-12	AF0707DC-AR12SC			FINISH SCHEDULE
DC-A-13	AF0707DC-AR13SC			DOOR AND WINDOW SCHEDULE
DC-A-14	AF0707DC-AR14DT			DOOR AND WINDOW DETAILS
DC-S-01	AF0707DC-SB01PN			FOUNDATION PLAN
DC-S-02	AF0707DC-SB02SE			FOUNDATION SECTIONS
DC-S-03	AF0707DC-SB03SE			THICKENED SLAB & FOUNDATION SECTIONS
DC-SS-00	AF0707DC-SS00DT			GENERAL NOTES
DC-SS-01	AF0707DC-SS01DT			TYPICAL MASONRY DETAILS
DC-SS-02	AF0707DC-SS02DT			TYPICAL MASONRY DETAILS
DC-SS-03	AF0707CC-SS03DT			TYPICAL SLAB ON GRADE DETAILS
DC-SS-04	AF0707CC-SS04DT			MISCELLANEOUS EXTERIOR CONCRETE PAD DETAILS
DC-GM-01	AF0707DC-MH01GN			HVAC LEGEND
DC-MH-01	AF0707DC-MH01PN			HVAC PLAN
DC-MH-02	AF0707DC-MH02PN			HVAC SCHEDULE
DC-DM-01	AF0707DC-MH02GN			HVAC DETAILS
DC-DM-02	AF0707DC-MH03GN			HVAC DETAILS
DC-DM-03	AF0707DC-MH04GN			HVAC DETAILS
DC-MK-01	AF0707DC-MH01PN			KITCHEN EQUIPMENT PLAN
DC-GP-01	AF0707DC-MP01GN			PLUMBING LEGEND AND DETAILS
DC-MP-01	AF0707DC-MP01PN			PLUMBING PLAN
DC-MP-02	AF0707DC-MP02LS			PLUMBING RISER
DC-GE-01	AF0707DC-EL01GN			ELECTRICAL LEGEND AND NOTES
DC-GE-02	AF0707DC-EL02GN			ELECTRICAL FIXTURE SCHEDULE AND BRANCH CIRCUIT
DC-E-01	AF0707DC-EL01PN			ELECTRICAL LIGHTING PLAN
DC-E-02	AF0707DC-EL02PN			ELECTRICAL POWER PLAN
DC-DE-01	AF0707DC-EL01DT			ELECTRICAL DETAILS
DC-DE-02	AF0707DC-EL02DT			ELECTRICAL DETAILS
DC-DE-03	AF0707DC-EL03DT			ELECTRICAL DETAILS
DC-SE-01	AF0707DC-EL01SC			ELECTRICAL SCHEDULES AND RISERS

DRAWING INDEX

SHT.REF. NO.	FILE NO.	REVISIONS REV. NO.	REVISIONS AM/COP NO.	TITLE
	AF0707--GI03GN			DRAWING INDEX SHEET 2
				CB MWR
CB-A-00	AF0707CB-AB01			ABBREVIATIONS & SYMBOLS
CB-A-01	AF0707CB-AR01PN			FLOOR PLAN
CB-A-03	AF0707CB-AR03PN			ROOF PLAN
CB-A-04	AF0707CB-AR04EL			ELEVATIONS
CB-A-05	AF0707CB-AR05EL			ELEVATIONS
CB-A-06	AF0707CB-AR06SE			BUILDING SECTION
CB-A-07	AF0707CB-AR07SE			WALL SECTION
CB-A-08	AF0707CB-AR08SE			WALL SECTION
CB-A-09	AF0707CB-AR09SE			INTERIOR WALL SECTION
CB-A-10	AF0707CB-AR10SC			WALL SECTION
CB-A-11	AF0707CB-AR11SC			DOOR & WINDOW SCHEDULE
CB-A-12	AF0707CB-AR12DT			DOOR AND COLUMN DETAILS
CB-A-13	AF0707CB-AR13DT			MISCELLANEOUS DETAILS
CB-S-01	AF0707CB-SB01PN			FOUNDATION PLAN
CB-S-02	AF0707CB-SB02PN			CEILING FRAMING PLAN
CB-S-03	AF0707CB-SF03PN			ROOF FRAMING PLAN
CB-S-04	AF0707CB-SB04SE			FOUNDATION SECTIONS
CB-S-05	AF0707CB-SB05SE			FOUNDATION SECTIONS
CB-S-06	AF0707CB-SF06SE			CEILING SLAB FRAMING SECTIONS
CB-S-07	AF0707CB-SF07SE			FRAMING SECTIONS
CB-SS-00	AF0707CB-SS00DT			GENERAL NOTES
CB-SS-01	AF0707CB-SS01DT			TYPICAL MASONRY DETAILS
CB-SS-02	AF0707CB-SS02DT			TYPICAL MASONRY DETAILS
CB-SS-03	AF0707CB-SS03DT			TYPICAL SLAB ON GRADE DETAILS
CB-SS-04	AF0707CB-SS04DT			MISCELLANEOUS EXTERIOR CONCRETE PAD DETAILS
CB-GM-01	AF0707CB-MH01GN			HVAC LEGEND
CB-MH-01	AF0707CB-MH01PN			HVAC PLAN
CB-DM-01	AF0707CB-DM02GN			HVAC DETAILS
CB-GP-01	AF0707CB-MP01GN			PLUMBING LEGEND AND DETAILS
CB-MP-01	AF0707CB-MP01PN			PLUMBING PLAN
CB-MP-02	AF0707CB-MP02LS			PLUMBING RISERS
CB-GE-01	AF0707CB-EL01GN			ELECTRICAL LEGEND AND NOTES
CB-GE-02	AF0707CB-EL02GN			ELECTRICAL FIXTURE SCHEDULE AND BRANCH CIRCUIT
CB-E-01	AF0707CB-EL01PN			ELECTRICAL LIGHTING & POWER PLAN
CB-DE-01	AF0707B-EL01DT			ELECTRICAL DETAILS
CB-DE-02	AF0707CB-EL02DT			ELECTRICAL DETAILS
CB-DE-03	AF0707CB-EL03DT			ELECTRICAL DETAILS
CB-SE-01	AF0707CB-EL01SC			PANEL SCHEDULE AND RISERS

SHT.REF. NO.	FILE NO.	REVISIONS REV. NO.	REVISIONS AM/COP NO.	TITLE
				CC – STORAGE BUILDING
CC-A-00	AF0707CC-AR00GN			ABBREVIATIONS & SYMBOLS
CC-A-01	AF0707CC-AR01PN			FLOOR & ROOF PLANS
CC-A-02	AF0707CC-AR02EL			EXTERIOR ELEVATIONS
CC-A-03	AF0707CC-AR03EL			BUILDING SECTIONS
CC-A-04	AF0707CC-AR04SE			WALL SECTION
CC-A-05	AF0707CC-AR05SE			WALL SECTION
CC-A-06	AF0707CC-AR06SC			FINISH SCHEDULE
CC-A-07	AF0707CC-AR07SC			DOOR SCHEDULE
CC-A-08	AF0707CC-AR08DT			MISCELLANEOUS DETAILS
CC-A-09	AF0707CC-AR09DT			MISCELLANEOUS DETAILS
CC-S-01	AF0707CC-SB01PN			FOUNDATION PLAN
CC-S-02	AF0707CC-SB02SE			FOUNDATION SECTIONS
CC-S-03	AF0707CC-SB03SE			FOUNDATION SECTION
CC-S-04	AF0707CC-SB04SE			COLUMN PEDESTAL DETAILS
CC-SS-00	AF0707CC-SS00DT			GENERAL NOTES
CC-SS-01	AF0707CC-SS01DT			TYPICAL MASONRY DETAILS
CC-SS-02	AF0707CC-SS02DT			TYPICAL MASONRY DETAILS
CC-SS-03	AF0707CC-SS03DT			TYPICAL SLAB ON GRADE DETAILS
CC-SS-04	AF0707CC-SS04DT			MISCELLANEOUS EXTERIOR CONCRETE PAD DETAILS
CC-MH-01	AF0707CC-MH01PN			HVAC PLAN
CC-DM-01	AF0707CC-MH02GN			HVAC DETAILS
CC-GE-01	AF0707CC-EL01GN			LEGEND AND NOTES
CC-GE-02	AF0707CC-EL02GN			FIXTURE SCHEDULE AND BRANCH CIRCUIT
CC-E-01	AF0707CC-EL01PN			ELECTRICAL LIGHTING & POWER PLANS RISER & PANEL SCHEDULE
CC-DE-01	AF0707CC-EL01DT			ELECTRICAL DETAILS
CC-DE-02	AF0707CC-EL02DT			ELECTRICAL DETAILS
CC-DE-03	AF0707CC-EL03DT			ELECTRICAL DETAILS
				CE – DEFAC 2
CE-A-00	AF0707CE-AR00GN			ABBREVIATIONS & SYMBOLS
CE-A-01	AF0707CE-AR01PN			FLOOR PLAN
CE-A-02	AF0707CE-AR02PN			DIMENSIONAL FLOOR PLAN
CE-A-03	AF0707CE-AR03PN			ROOF PLAN
CE-A-04	AF0707CE-AR04PN			REFLECTED CEILING PLAN
CE-A-05	AF0707CE-AR05EL			EXTERIOR ELEVATIONS
CE-A-06	AF0707CE-AR06EL			EXTERIOR ELEVATIONS
CE-A-07	AF0707CE-AR07SE			BUILDING SECTIONS
CE-A-08	AF0707CE-AR08SE			WALL SECTION
CE-A-09	AF0707CE-AR09SE			WALL SECTION
CE-A-10	AF0707CE-AR10SE			WALL SECTION
CE-A-11	AF0707CE-AR11SE			WALL SECTION
CE-A-12	AF0707CE-AR12SE			INTERIOR WALL SECTION
CE-A-13	AF0707CE-AR13SC			INTERIOR WALL SECTION
CE-A-14	AF0707CE-AR14SC			FINISH SCHEDULE
CE-A-15	AF0707CE-AR15SC			DOOR & WINDOW SCHEDULE
CE-A-16	AF0707CE-AR16SC			DOOR & WINDOW DETAILS
CE-S-01	AF0707CE-SB01PN			FOUNDATION PLAN
CE-S-02	AF0707CE-SF02PN			CEILING FRAMING PLAN
CE-S-03	AF0707CE-SF03PN			ROOF FRAMING PLAN
CE-S-04	AF0707CE-SB04SE			FOUNDATION SECTIONS
CE-S-05	AF0707CE-SB05SE			FOUNDATION SECTIONS
CE-S-06	AF0707CE-SF06SE			FRAMING SECTIONS
CE-S-07	AF0707CE-SF07SE			FRAMING SECTIONS
CE-SS-00	AF0707CE-SS00DT			GENERAL NOTES
CE-SS-01	AF0707CE-SS01DT			TYPICAL MASONRY DETAILS
CE-SS-02	AF0707CE-SS02DT			TYPICAL MASONRY DETAILS
CE-SS-03	AF0707CE-SS03DT			TYPICAL SLAB ON GRADE DETAILS

DRAWING INDEX

SHT.REF. NO.	FILE NO.	REVISIONS REV. NO.	REVISIONS AM/COP NO.	TITLE
	AF0707--GI02GN			DRAWING INDEX SHEET 1
				SITE DESIGN
C-101	AF0707-CI01PN			PROPOSED SITE LAYOUT
				A-DPW BUILDING
A-A-00	AF0707A-AB01			ABBREVIATIONS & SYMBOLS
A-A-01	AF0707A-AR01PN			FLOOR\ROOF PLAN
A-A-02	AF0707A-AR02EL			ELEVATIONS
A-A-03	AF0707A-AR03EL			ELEVATIONS
A-A-04	AF0707A-AR04SE			BUILDING SECTION
A-A-05	AF0707A-AR05SE			BUILDING SECTION
A-A-06	AF0707A-AR06SE			WALL SECTION
A-A-07	AF0707A-AR07SE			WALL SECTION
A-A-08	AF0707A-AR08SE			WALL SECTION
A-A-09	AF0707A-AR09SE			INTERIOR WALL SECTIONS
A-A-10	AF0707A-AR10SE			WALL SECTION
A-A-11	AF0707A-AR11SE			DOOR & WINDOW SCHEDULE
A-A-12	AF0707A-AR12DT			DOOR AND COLUMN DETAILS
A-S-01	AF0707A-SB01PN			FOUNDATION PLAN
A-S-02	AF0707A-SB02SE			FOUNDATION SECTIONS
A-S-03	AF0707A-SB03SE			FOUNDATION SECTIONS
A-S-04	AF0707A-SB04SE			COLUMN PEDESTAL DETAILS
A-S-05	AF0707A-SB05SE			COLUMN PEDESTAL DETAILS
A-SS-00	AF0707A-SS00DT			GENERAL NOTES
A-SS-01	AF0707A-SS01DT			TYPICAL MASONRY DETAILS
A-SS-02	AF0707A-SS02DT			TYPICAL MASONRY DETAILS
A-SS-03	AF0707A-SS03DT			TYPICAL SLAB ON GRADE DETAILS
A-SS-04	AF0707A-SS03DT			MISCELLANEOUS EXTERIOR CONCRETE PAD DETAILS
A-GM-01	AF0707A-MH01GN			HVAC LEGEND
A-MH-01	AF0707A-MH01PN			HVAC PLAN
A-DM-01	AF0707A-MH01GN			HVAC DETAILS
A-DM-02	AF0707A-MH02GN			HVAC DETAILS
A-DM-03	AF0707A-MH03GN			HVAC DETAILS
A-GP-01	AF0707A-MP01GN			PLUMBING LEGEND AND DETAILS
A-MP-01	AF0707A-MP01PN			PLUMBING PLAN
A-MP-02	AF0707A-MP02LS			PLUMBING RISER
A-GE-01	AF0707A-EL01GN			ELECTRICAL LEGEND AND NOTES
A-GE-02	AF0707A-EL02GN			ELECTRICAL FIXTURE SCHEDULE AND BRANCH CIRUIT
A-E-01	AF0707A-EL01PN			ELECTRICAL LIGHTING PLAN - A
A-E-02	AF0707A-EL02PN			ELECTRICAL LIGHTING PLAN - B
A-E-03	AF0707A-EL03PN			ELECTRICAL POWER PLAN - A
A-E-04	AF0707A-EL04PN			ELECTRICAL POWER PLAN - B
A-DE-01	AF0707A-EL01DT			ELECTRICAL DETAILS
A-DE-02	AF0707A-EL02DT			ELECTRICAL DETAILS
A-DE-03	AF0707A-EL03DT			ELECTRICAL DETAILS
A-SE-01	AF0707A-EL01SC			ELECTRICAL SCHEDULES & RISERS

SHT.REF. NO.	FILE NO.	REVISIONS REV. NO.	REVISIONS AM/COP NO.	TITLE
				B - DETENTION FACILITY
B-A-00	AF0707B-AB01			ABBREVIATIONS & SYMBOLS
B-A-01	AF0707B-AR01PN			FLOOR PLAN
B-A-02	AF0707B-AR02PN			ROOF PLAN-WIRE CAGE DETAILS AND ELEVATIONS
B-A-03	AF0707B-AR03EL			ELEVATIONS
B-A-04	AF0707B-AR04EL			ELEVATIONS
B-A-05	AF0707B-AR05SC			SCHEDULES
B-A-06	AF0707B-AR06SE			BUILDING CROSS SECTION
B-A-07	AF0707B-AR07SE			WALL SECTION
B-A-08	AF0707B-AR08SE			WALL SECTION
B-A-09	AF0707B-AR09SE			INTERIOR WALL SECTION
B-A-10	AF0707B-AR10SC			DOOR AND WINDOW SCHEDULE
B-A-11	AF0707B-AR11DT			DOOR DETAILS
B-A-12	AF0707B-AR12DT			MISCELLANEOUS DETAILS
B-A-13	AF0707B-AR13DT			MISCELLANEOUS DETAILS
B-S-01	AF0707B-SB01PN			FOUNDATION PLAN
B-S-02	AF0707B-SB02PN			CEILING FRAMING PLAN
B-S-03	AF0707B-SF03PN			ROOF FRAMING PLAN
B-S-04	AF0707B-SB04SE			FOUNDATION SECTIONS
B-S-05	AF0707B-SB05SE			THICKENED SLAB SECTIONS
B-S-06	AF0707B-SF06SE			CEILING SLAB FRAMING SECTIONS
B-S-07	AF0707B-SF07SE			ROOF FRAMING SECTIONS
B-SS-00	AF0707B-SS00DT			GENERAL NOTES
B-SS-01	AF0707B-SS01DT			TYPICAL MASONRY DETAILS
B-SS-02	AF0707B-SS02DT			TYPICAL MASONRY DETAILS
B-SS-03	AF0707B-SS03DT			TYPICAL SLAB ON GRADE DETAILS
B-SS-04	AF0707B-SS04DT			MISCELLANEOUS EXTERIOR CONCRETE PAD DETAILS
B-GM-01	AF0707B-MH01GN			HVAC LEGEND
B-MH-01	AF0707B-MH01PN			HVAC PLAN
B-DM-01	AF0707B-DM01DT			HVAC DETAILS
B-GP-01	AF0707B-MP01GN			PLUMBING LEGEND AND DETAILS
B-MP-01	AF0707B-MP01PN			PLUMBING PLAN
B-MP-02	AF0707B-MP02LS			PLUMBING RISERS
B-GE-01	AF0707B-EL01GN			ELECTRICAL LEGEND AND NOTES
B-GE-02	AF0707B-EL02GN			ELECTRICAL FIXTURE SCHEDULE AND BRANCH CIRCUIT
B-E-01	AF0707B-EL01PN			ELECTRICAL LIGHTING & POWER PLAN RISER & PANEL SCHEDULE
B-DE-01	AF0707B-EL01DT			ELECTRICAL DETAILS
B-DE-02	AF0707B-EL02DT			ELECTRICAL DETAILS
B-DE-03	AF0707B-EL03DT			ELECTRICAL DETAILS

ANA Regional Brigade

Paktika, Afghanistan

Volume 1 of 3

A DPW Building
B Detention Facility
CB MWR
CC Storage Building
CE DFAC 2
DA Barracks
DB MWR
DC DFAC 3
E Fire Station
F Ranges
FA Observation Tower
FB Ammunition Breakdown Building
FC Bleacher Enclosure

US Army Corps
of Engineers
Transatlantic Programs Center

26 June 2007

DRAWING INDEX

SHT.REF. NO.	FILE NO.	REVISIONS REV. NO.	REVISIONS AM/COP NO.	TITLE
	AF0707--GI06GN			DRAWING INDEX SHEET 4
				E – FIRE STATION
E-A-00	AF0707E-AB01			ABBREVIATIONS & SYMBOLS
E-A-01	AF0707E-AR01PN			FLOOR\ROOF PLAN
E-A-02	AF0707E-AR02EL			ELEVATIONS
E-A-03	AF0707E-AR03EL			ELEVATIONS
E-A-04	AF0707E-AR04SE			BUILDING SECTION
E-A-05	AF0707E-AR05SE			BUILDING SECTION
E-A-06	AF0707E-AR06SE			WALL SECTION
E-A-07	AF0707E-AR07SE			WALL SECTION
E-A-08	AF0707E-AR08SE			WALL SECTION
E-A-09	AF0707E-AR09SE			INTERIOR WALL SECTION
E-A-10	AF0707E-AR10SC			FINISH SCHEDULE
E-A-11	AF0707E-AR11SC			DOOR & WINDOW SCHEDULE
E-A-12	AF0707E-AR12DT			DOOR DETAILS
E-S-01	AF0707E-SB01PN			FOUNDATION PLAN
E-S-02	AF0707E-SB02SE			FOUNDATION SECTIONS
E-S-03	AF0707E-SF03SE			FOUNDATION SECTIONS
E-S-04	AF0707E-SB04SE			THICKENED SLAB SECTION
E-S-05	AF0707E-SB05SE			COLUMN PEDESTAL DETAILS
E-S-06	AF0707E-SB06SE			COLUMN PEDESTAL DETAILS
E-SS-00	AF0707E-SS00DT			TYPICAL MASONRY DETAILS
E-SS-01	AF0707E-SS01DT			TYPICAL MASONRY DETAILS
E-SS-02	AF0707E-SS02DT			TYPICAL MASONRY DETAILS
E-SS-03	AF0707E-SS03DT			TYPICAL SLAB ON GRADE DETAILS
E-SS-04	AF0707E-SS04DT			MISCELLANEOUS EXTERIOR CONCRETE PAD DETAILS
E-GM-01	AF0707E-MH01GN			HVAC LEGEND
E-MH-01	AF0707E-MH01PN			HVAC PLAN
E-DM-01	AF0707E-MH02GN			HVAC DETAILS
E-DM-02	AF0707E-MH03GN			HVAC DETAILS
E-DM-03	AF0707E-MH04GN			HVAC DETAILS
E-GP-01	AF0707E-MP01GN			PLUMBING LEGEND AND DETAILS
E-MP-01	AF0707E-MP01PN			PLUMBING PLAN
E-MP-02	AF0707E-MP02LS			HVAC PLAN
E-GE-01	AF0707E-EL01GN			ELECTRICAL LEGEND AND NOTES
E-GE-02	AF0707E-EL02GN			ELECTRICAL FIXTURE SCHEDULE AND BRANCH CIRCUIT
E-E-01	AF0707E-EL01PN			ELECTRICAL LIGHTING PLAN
E-E-02	AF0707E-EL02PN			ELECTRICAL POWER PLAN
E-DE-01	AF0707E-EL01DT			ELECTRICAL DETAILS
E-DE-02	AF0707E-EL02DT			ELECTRICAL DETAILS
E-DE-03	AF0707E-EL03DT			ELECTRICAL DETAILS
E-SE-01	AF0707E-EL01SC			PANEL SCHEDULES AND RISERS
				F – RANGE
F-CI-01	AF0707F-CI01PN			PISTOL RANGE LAYOUT PLAN
F-CI-02	AF0707F-CI02PN			RIFLE RANGE LAYOUT PLAN
F-CI-03	AF0707F-CI03PN			RPG RANGE LAYOUT PLAN
F-CI-04	AF0707F-CI04PN			MACHINE GUN RANGE LAYOUT PLAN
F-CI-05	AF0707F-CI05PN			GRENADE LAUCHER RANGE LAYOUT PLAN
F-CI-06	AF0707F-CI06PN			MORTAR RANGE LAYOUT PLAN
F-CI-07	AF0707F-CI07PN			SURFACE DANGER ZONE RPG, PISTOL & GRENAGE LAUNCHER RANGES
F-CI-08	AF0707F-CI08PN			SURFACE DANGER ZONE RIFLE & MACHINE GUN RANGE
F-CI-09	AF0707F-CI09PN			SURFACE DANGER ZONE MORTAAR RANGE
F-CI-10	AF0707F-CI10PN			ONE MAN FIGHTING POSITION

SHT.REF. NO.	FILE NO.	REVISIONS REV. NO.	REVISIONS AM/COP NO.	TITLE
				FA – OBSERVATIONS TOWER
FA-A-00	AF0707FA-AB01S			ABBREVIATIONS & SYMBOLS
FA-A-01	AF0707FA-AR01PN			PLAN VIEW
FA-A-02	AF0707FA-AR02EL			ELEVATION VIEW
FA-A-4	AF0707FA-AR03SE			WALL SECTIONS
FA-A-04	AF0707FA-AR04SC			DOOR & WINDOW SCHEDULE
FA-A-05	AF0707FA-AR05SC			DOOR & WINDOW SCHEDULE
FA-DE-01	AF0707FA-EL01DT			ELECTRICAL DETAILS
FA-DE-02	AF0707FA-EL02DT			ELECTRICAL DETAILS
FA-DE-03	AF0707FA-EL03DT			ELECTRICAL DETAILS
FA-E-01	AF0707FA-EL01PN			LIGHTING & POWER PLANS, RISER & PANEL SCHEDULE
FA-GE-01	AF0707FA-EL01GN			ELECTRICAL LEGEND AND NOTES
FA-GE-02	AF0707FA-EL02GN			ELECTRICAL SCHEDULE AND BRANCH CIRCUIT
FA-S-01	AF0707FA-SB01PN			FOUNDATION AND FRAMING PLANS
FA-S-02	AF0707FA-SB02SE			FRAME SECTION
FA-S-03	AF0707FA-SB03SE			SECTIONS AND DETAILS
FA-S-04	AF0707FA-SB04SE			SLAB SECTIONS
FA-S-05	AF0707FA-SF05SE			SECTIONS
FA-S-06	AF0707FA-SF06PN			FRAMING PLAN
FA-S-07	AF0707FA-SF07SE			BUILDING FRAMING ELEVATIONS
FA-SS-00	AF0707FA-SS00DT			TYPICAL MASONRY DETAILS
FA-MH-01	AF0707FA-MH01PN			HVAC PLAN
				FB – AMMUNITION BREAKDOWN BUILDING
FB-A-00	AF0707FB-AB01			ABBREVIATIONS & SYMBOLS & GENERAL NOTES
FB-A-01	AF0707FB-A01PN			FLOOR AND ROOF AND NOTES
FB-A-02	AF0707FB-AR02EL			ELEVATIONS AND SECTIONS
FB-A-03	AF0707FB-AR03SE			SECTION
FB-A-04	AF0707FB-AR04SE			SECTION
FB-A-5	AF0707FB-AR05SC			DOOR & WINDOW SCHEDULE
FB-A-06	AF0707FB-AR06SC			FINISH SCHEDULE AND MISCELANEOUS DETAILS
FB-S-01	AF0707FB-SF01PN			FOUNDATION, CEILING, AND ROOF PLANS
FB-S-02	AF0707FB-SF02SE			FOUNDATION SECTIONS
FB-S-03	AF0707FB-SF03SE			SLAB SECTIONS
FB-SS-00	AF0707FB-SS00DT			GENERAL NOTES
FB-SS-01	AF0707FB-SS01DT			TYPICAL MASONRY DETAILS
FB-SS-02	AF0707FB-SS02DT			TYPICAL MASONRY DETAILS
FB-SS-03	AF0707FB-SS03DT			TYPICAL SLAB ON GRADE DETAILS
FB-SS-04	AF0707FB-SS04DT			MISCELLANEOUS EXTERIOR CONCRETE PAD DETAILS
				FC – BLEACHER ENCLOSURE
FC-A-00	AF0707FC-AB01S			ABBREVIATIONS & SYMBOLS AND GENERAL NOTES
FC-A-01	AF0707FC-AR01PN			PLAN BLEACHER ENCLOSURE
FC-A-02	AF0707FC-AR02EL			PLAN BLEACHER ENCLOSURE
FC-S-01	AF0707FC-SF01PN			FOUNDATION AND ROOF PLANS
FC-S-02	AF0707FC-SF02SE			FOUNDATION SECTIONS
FC-S-03	AF0707FC-SB03SE			COLUMN PEDESTAL DETAILS
FC-SS-00	AF0707FC-SS00DT			GENERAL NOTES
FC-SS-01	AF0707FC-SS01DT			TYPICAL MASONRY DETAILS

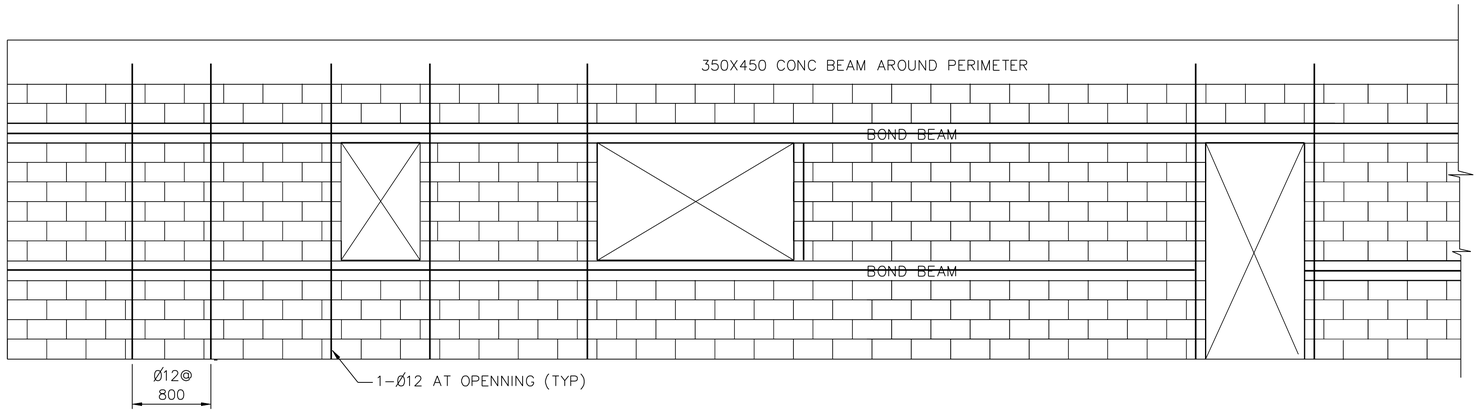

TYPICAL EXTERIOR BLOCK (CMU) WALL ELEVATIONS

*SEE DETAIL ON SHEET CO-S-03/SECTION 1

MASONRY NOTES:

1. WORK THIS SHEET WITH ARCHITECTURAL SHEETS AND SPECIFICATION SECTION 04200.
2. PROVIDE JOINT REINFORCEMENT AT A MAXIMUM SPACING OF 400 MILLIMETERS ON CENTERS.
3. IN ADDITION TO JOINT REINFORCEMENT IDENTIFIED FOR PLACEMENT IN NOTE 2 ABOVE, PROVIDE JOINT REINFORCEMENT ADJACENT TO SILLS AND HEADS OF ALL OPENINGS HAVING A MASONRY WIDTH GREATER THAN 1.60 METERS. EXTEND (OR OTHERWISE ANCHOR) SUCH REINFORCEMENT A MINIMUM OF 600 MILLIMETERS BEYOND EACH FACE OF OPENING.
4. BOND BEAMS SHALL BE PROVIDED IN BOTH EXTERIOR AND INTERIOR WALLS AT A MAXIMUM SPACING OF ____ METERS AND/OR AS SHOWN. REINFORCE BOND BEAMS WITH __Ø__ REBAR UNLESS OTHERWISE NOTED.
5. DISCONTINUE BOND BEAM AND JOINT REINFORCEMENT AT MASONRY CONTROL JOINTS UNLESS OTHERWISE NOTED.
6. UNLESS NOTED OTHERWISE PROVIDE A MINIMUM OF 2-Ø 12 REBAR IN LINTEL BEAMS SPANNING MASONRY OPENINGS HAVING A WIDTH GREATER THAN ONE METER. EXTEND (OR OTHERWISE ANCHOR) SUCH REINFORCEMENT A MINIMUM OF 600 MILLIMETERS BEYOND EACH FACE OF OPENING.
7. WHERE REINFORCEMENT FOR A BOND BEAM AND LINTEL ARE ALIGNED WITHIN A MASONRY COURSING EXTEND (OR OTHERWISE ANCHOR) REBAR FOR THE LINTEL A MINIMUM OF 600 MILLIMETERS BEYOND EACH FACE OF OPENING.
8. PROVIDE A MASONRY BOND TO INTERSECTING LOAD-BEARING WALLS AT CORNERS ONLY. WHERE A LOAD-BEARING WALL TERMINATES AT THE FACE OF ANOTHER LOAD-BEARING WALL, PROVIDE A CONTROL JOINT. FOR LATERAL SUPPORT BETWEEN SUCH WALLS PROVIDE STEEL TIE BARS, SPACED NOT MORE THAN 800mm ON CENTER VERTICALLY.
9. PROVIDE A MASONRY BOND TO INTERSECTING NON LOAD-BEARING WALLS OR PARTITIONS AT CORNERS ONLY. WHERE NON LOAD-BEARING WALLS OR PARTITIONS TERMINATE AT THE FACE OF ANOTHER WALL OR PARTITION PROVIDE A CONTROL JOINT. FOR LATERAL SUPPORT BETWEEN SUCH WALLS OR PARTITIONS PROVIDE STRIPS OF METAL LATH OR ONE-QUARTER INCH MESH SPACED NOT MORE THAN 400mm ON CENTER VERTICALLY.
10. PROVIDE MASONRY CONTROL JOINT LOCATIONS WITHOUT CUTTING BLOCKS
11. IN ADDITION TO THE VERTICAL REINFORCEMENT INDICATED ON WALL DETAILS FOR PLACEMENT, PROVIDE 1 - Ø12 REBAR ADJACENT TO SIDES OF MASONRY OPENINGS.
12. CMU BLOCK DETAILS SHALL MATCH DETAILING OF EXISTING BUILDINGS ON SITE.

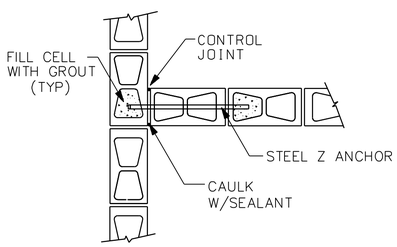

INTERSECTION OF WALLS OR PARTITIONS

SEE NOTES 8 AND 9

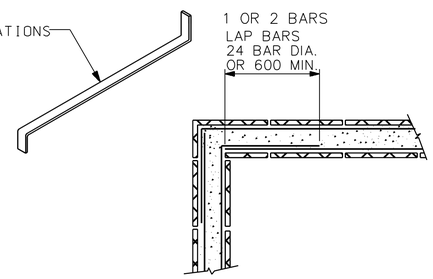

DETAIL OF BOND BEAM REINFORCING SPLICE AT CORNER

N.T.S.

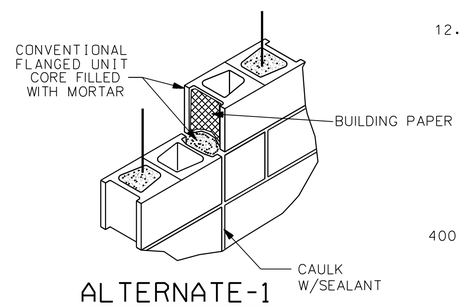

ALTERNATE-1

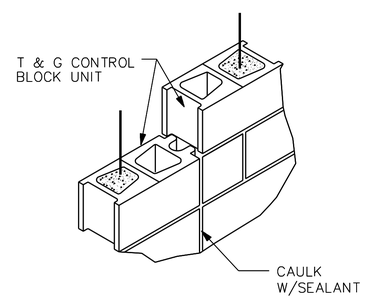

ALTERNATE-2

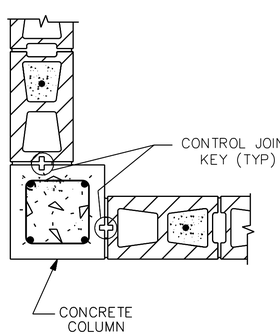

DETAIL B

N.T.S.

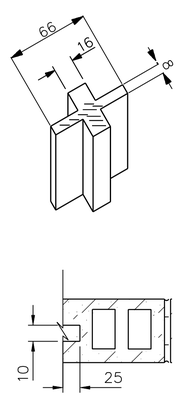

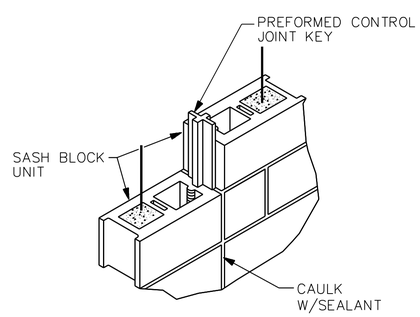

MASONRY CONTROL JOINT DETAILS

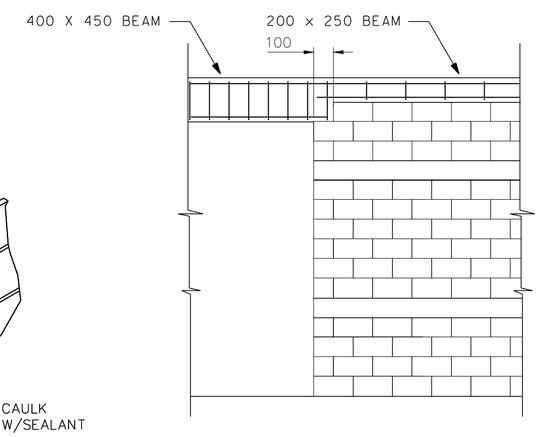

1 CAP BEAM TO BEAM OVER CMU WALL

CO-S-08 SCALE: N.T.S

SYMBOL	DESCRIPTION	DATE	APR

DESIGNED BY: TCP
DWN BY: AMG
CHK BY: KGO
DATE:
SUBMITTED BY: PHILIP J. DINELLO, PROJ. MGR. PROJECTS DEV
FILE NO.: AF0707 CO-S-08

US Army Corps of Engineers Transatlantic Programs Center

ANA REGIONAL BRIGADE
PAKTIKA, AFGHANISTAN

STANDARD DETAILS

STRUCTURAL DETAILS

SHEET REFERENCE NUMBER:
CO-S-08

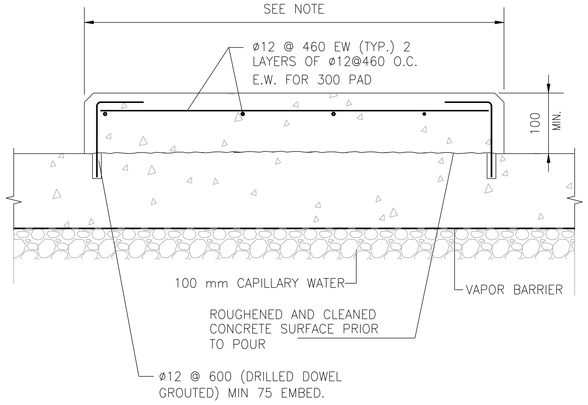

NOTE:

1– CONTRACTOR TO COORDINATE SIZE AND LOCATION OF PADS WITH ELECTRICAL AND MECHANICAL CONTRACTORS.

2– SIZE & LOCATION OF EQUIPMENT PADS SHALL BE COORDINATED WITH THE EQUIPMENT FURNISHED .

3– SEE MECHANICAL, ELECTRICAL AND PLUMBING DRAWINGS FOR THE HEIGHT OF EACH PAD.

2 TYPICAL EQUIPMENT PAD DETAIL

CO–S–03 SCALE: 1:10

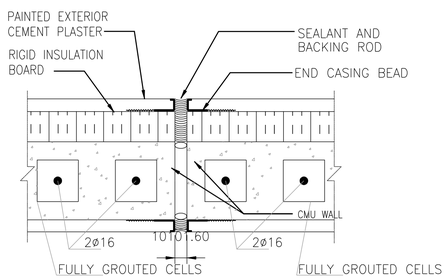

NOTE:.

THIS DETAIL IS VALID ONLY AT ALL CONTROL JOINT

FOR LOCATION OF CONTROL JOINTS REFER TO ARCHITECT DRAWINGS

3 TYPICAL DETAIL AT CONTROL JOINT

CO–S–03 SCALE: 1:5

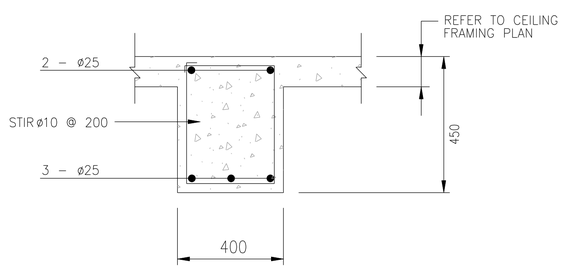

4 TYPICAL BEAM SECTION

CO–S–03 SCALE: 1:10

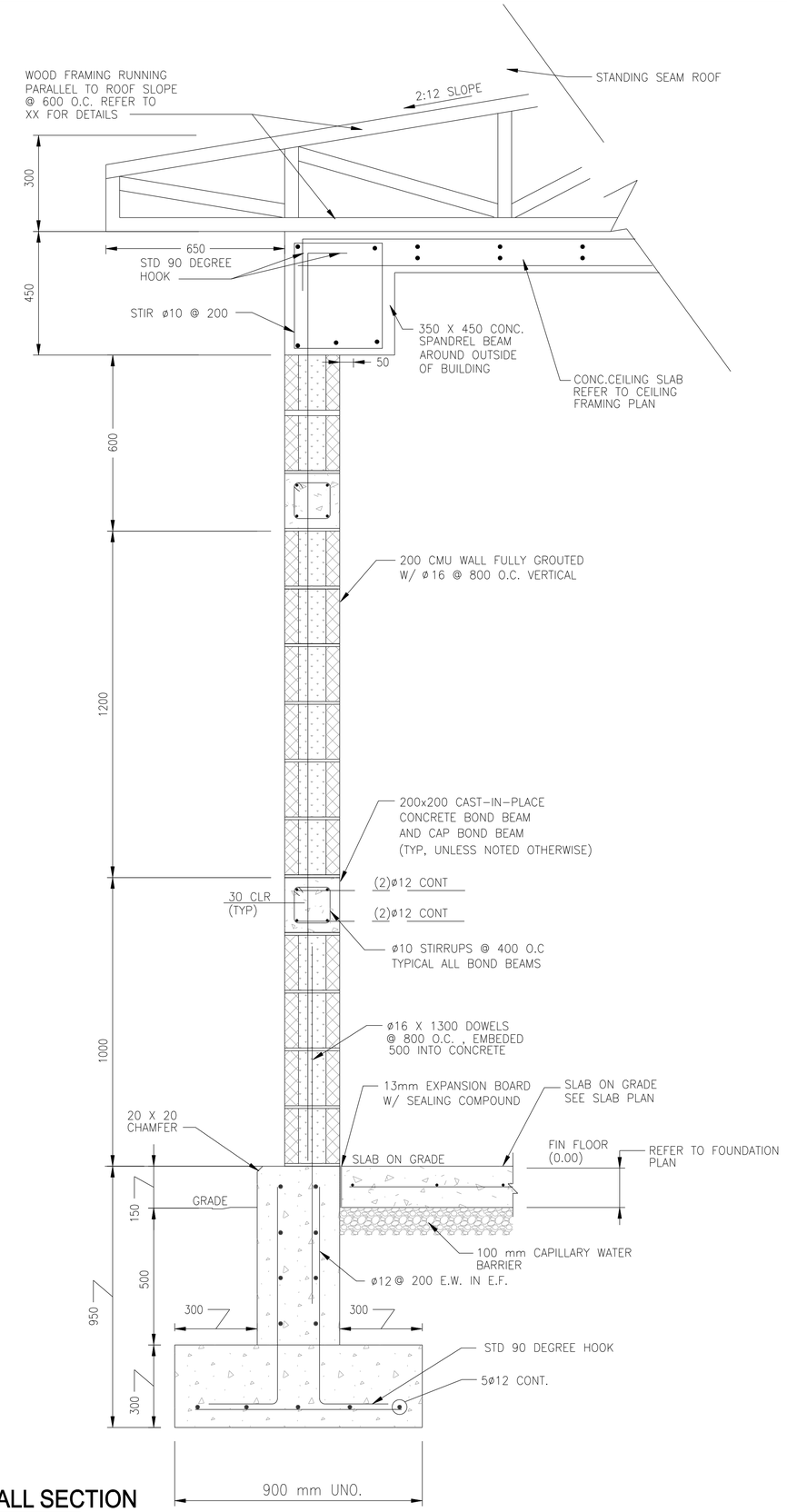

1 TYPICAL EXTERIOR CMU WALL SECTION

CO–S–03 SCALE: 1:10

DRAWING NOT TO SCALE 0 .50 1.00 1:10

SYMBOL	DESCRIPTION	DATE	APR

DESIGNED BY: TCP
DWN BY: AMG
CHK BY: KGO
DATE: 04–11–07
SUBMITTED BY: PHILIP L. DINELLO CHIEF, PDT FACILITIES DEV
FILE NO.: AF0707 CO–S–03

US Army Corps of Engineers Transatlantic Programs Center

ANA REGIONAL BRIGADE
PAKTIKA, AFGHANISTAN

TYPICAL ROOF FRAMING DETAILS

SHEET REFERENCE NUMBER: CO–S–03

etvar, "dwgprefix"}${getvar, "dwgname"}${edtime, O, MON DD", YYYY – HHMMam/pm)

NOTES:

1. FOR STANDARD DETAILS SEE DWG. No. (CO-M-01, 02, 03 & 04).
2. FOR CONTROL DIAGRAMS SEE DWG. No. (CO-M-05).
3. FOR LEGEND AND ABBREVIATION SEE DWG. No. (CO-M-06).
4. FOR HEAT VENTILATION UNIT DETAIL SEE DWG NO. (CO-M-07)

SPECIFIC NOTES:

1. 500x500mm EXHAUST DUCT DOWN, TO WELDING HOOD AND UP TO EXHAUST FAN ON ROOF.
2. WELDING HOOD
3. CO2 EXHAUST DUCT REEL FOR TAIL PIPE EXHAUST.

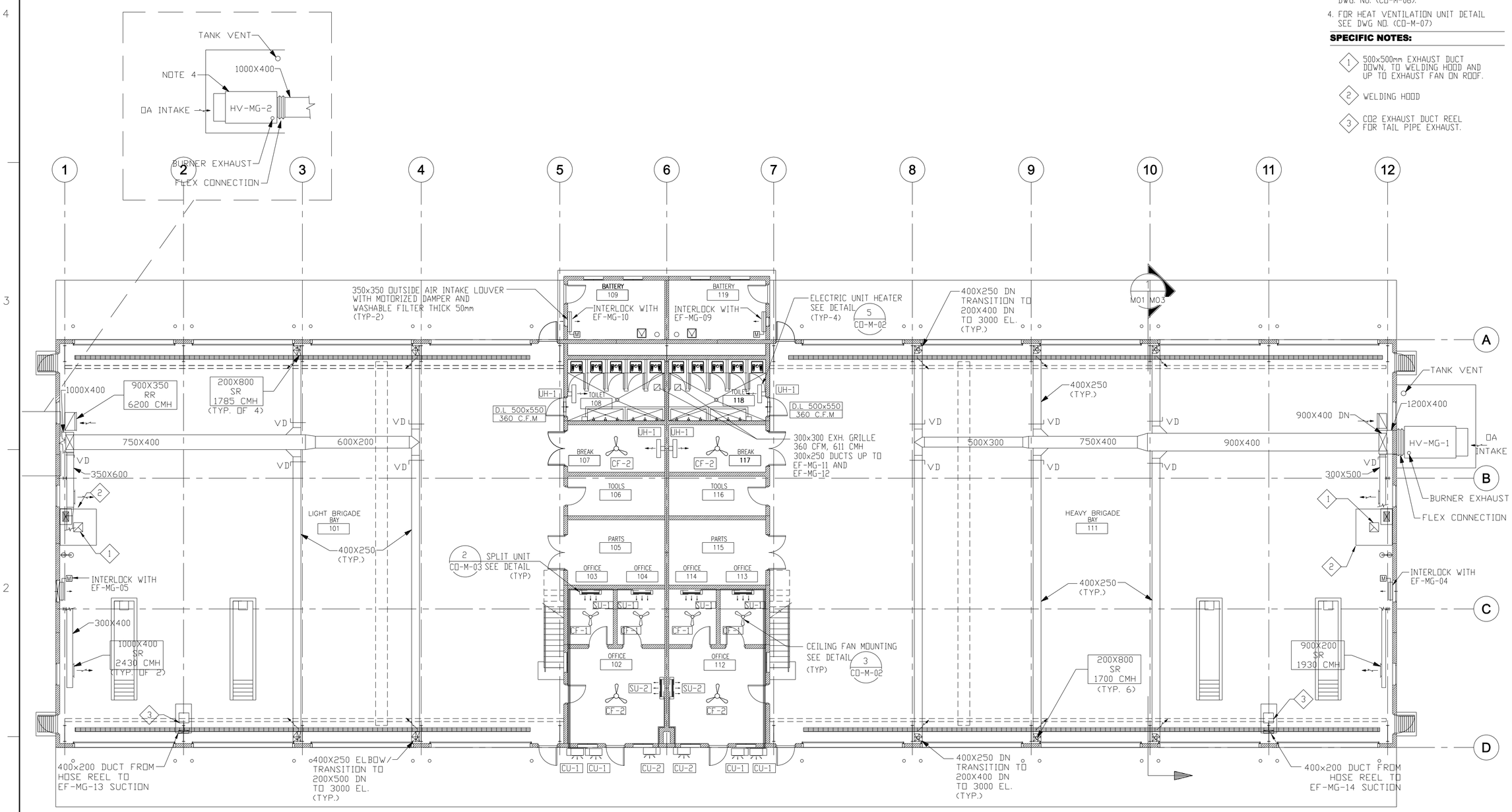

1 MECHANICAL FLOOR PLAN

MG-M-01 SCALE: 1:100

1 0 1 2 3 4 5 6 7 8 9
1:100

DRAWING NOT TO SCALE

SYMBOL	DESCRIPTION	DATE	APR

DESIGNED BY: XXX	DATE: 06-27-07	
DWN BY: XXX	SUBMITTED BY: R. CREWAL CHIEF, PROJ. BLDG SYSTEMS	
CHK BY: XXX	FILE NO.: AF0707PJ-MG-M-01	

US Army Corps of Engineers Transatlantic Programs Center

ANA REGIONAL BRIGADE
PAKTIKA, AFGHANISTAN
BRIGADE & GARRISON HQ COMPLEX
MAINTENANCE GARAGE (9 BAY)
MECHANICAL FLOOR PLAN

SHEET REFERENCE NUMBER:
PJ
MG-M-01

$(getvar, "dwgprefix")$(getvar, "dwgname")$(edtime, 0, MON DD"", YYYY - H:MMam/pm)

NOTES:

1. FOR STANDARD DETAILS SEE DWG. No. (CO-M-01, 02, 03 & 04).
2. FOR CONTROL DIAGRAMS SEE DWG. No. (CO-M-05).
3. FOR LEGEND AND ABBREVIATION SEE DWG. No. (CO-M-06).

SPECIFIC NOTES:

1. 350x350 EXHAUST DUCT UTR. EXTEND EXHAUST DUCT 1220mm ABOVE ROOF WITH GOOSENECK.

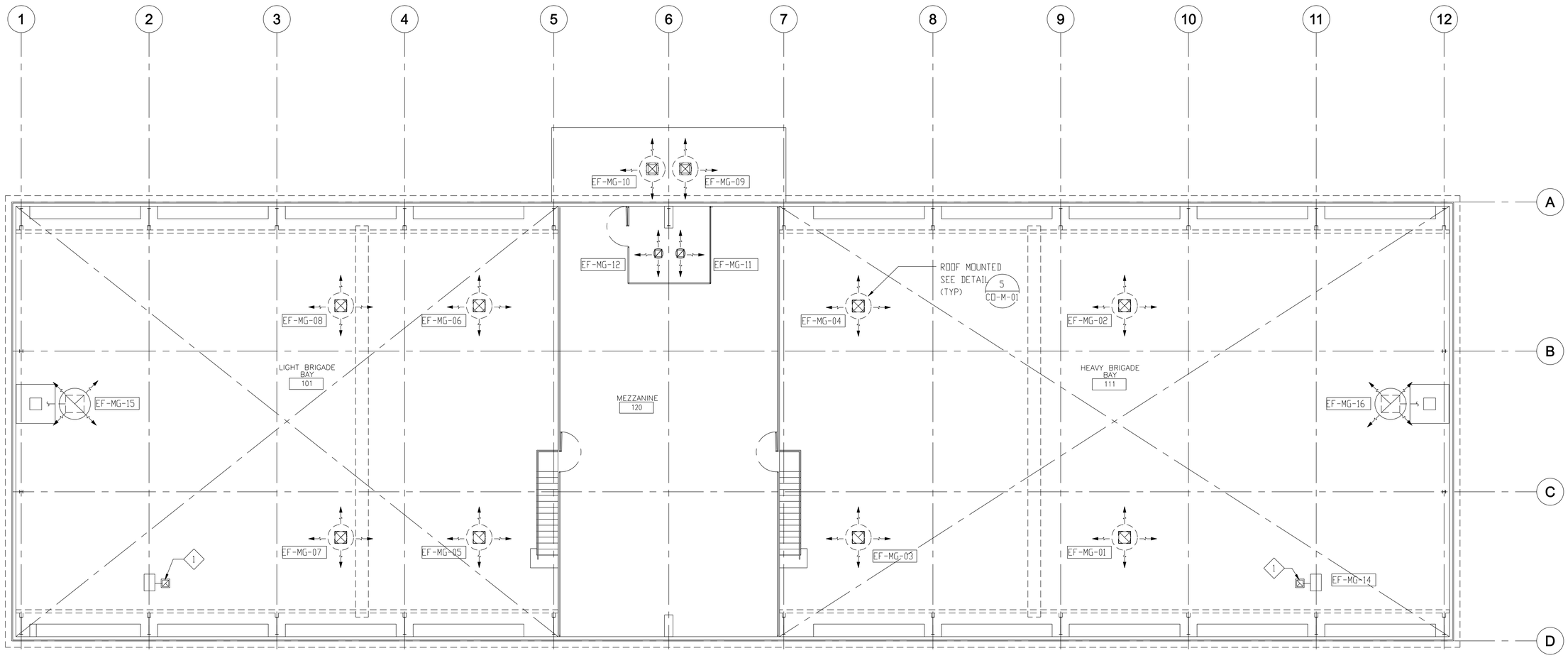

1 MEZZANINE FLOOR PLAN

MG-M-02

SCALE: 1:100

1 0 1 2 3 4 5 6 7 8 9
1:100 DRAWING NOT TO SCALE

SYMBOL	DESCRIPTION	DATE	APR

DESIGNED BY: F.MAMDOOH
DWN BY: A.LATIF
CHK BY: A.MAKRAM
DATE: 06-27-07
SUBMITTED BY: R. CREWAL CHIEF, BLDG SYSTEMS
FILE NO.: AF0707MG-M-02

US Army Corps of Engineers Transatlantic Programs Center

ANA REGIONAL BRIGADE
PAKTIKA, AFGHANISTAN
BRIGADE & GARRISON HQ COMPLEX
MAINTENANCE GARAGE (9 BAY)
MEZZANINE FLOOR PLAN

SHEET REFERENCE NUMBER:
MG-M-02

$(getvar, "dwgprefix")$(getvar, "dwgname")$(edtime, 0, MON DD", YYYY - H:MMam/pm)
XX-X-XX

EXHAUST FAN SCHEDULE (EF)

UNIT NUMBER	SERVICE	TYPE	AIR QUANTITY		MINIMUM WHEEL DIAMETER		FAN	STATIC PRESSURE		ELECTRICAL DATA				TEMP CONTROL DIAGRAM	INTERLOCK WITH	DRIVE TYPE	REMARKS
			CMH	CFM	MM	INCHES	RPM	mmH20	IN W.G.	H.P.	VOLTS	PHASE	HERTZ				
EF-MG-01	HEAVY BRIGADE BAY 111	R-CTFG-GP	4065	2400	–	–	1620	12	1/2	0.46	220	1	50	E-5	HV-MG-01	DIRECT	SEE NOTE 1,3,4
EF-MG-02	HEAVY BRIGADE BAY 111	R-CTFG-GP	4065	2400	–	–	1620	12	1/2	0.46	220	1	50	E-5	HV-MG-01	DIRECT	SEE NOTE 1,3,4
EF-MG-03	HEAVY BRIGADE BAY 111	W-CTFG-GP	4065	2400	–	–	1620	12	1/2	0.46	220	1	50	E-5	HV-MG-01	DIRECT	SEE NOTE 1,3,4
EF-MG-04	HEAVY BRIGADE BAY 111	R-CTFG-EP	4065	2400	–	–	1620	12	1/2	0.46	220	1	50	E-5	—	DIRECT	SEE NOTE 1,2,3,4
EF-MG-05	HEAVY BRIGADE BAY 111	R-CTFG-GP	3390	2000	–	–	1405	12	1/2	.30	220	1	50	E-5	HV-MG-02	DIRECT	SEE NOTE 1,3,4
EF-MG-06	HEAVY BRIGADE BAY 111	R-CTFG-GP	3390	2000	–	–	1405	12	1/2	.30	220	1	50	E-5	HV-MG-02	DIRECT	SEE NOTE 1,3,4
EF-MG-07	HEAVY BRIGADE BAY 111	R-CTFG-GP	3390	2000	–	–	1405	12	1/2	.30	220	1	50	E-5	HV-MG-02	DIRECT	SEE NOTE 1,3,4
EF-MG-08	HEAVY BRIGADE BAY 111	R-CTFG-GP	3390	2000	–	–	1405	12	1/2	.30	220	1	50	E-5	—	DIRECT	SEE NOTE 1,2,3,4
EF-MG-09	BATTERY	R-CTFG-GP	610	360	–	–	1100	9.5	3/8	1/4	380	3	50	E-5	—	DIRECT	SEE NOTE 1,3,4
EF-MG-10	BATTERY	R-CTFG-GP	610	360	–	–	1100	9.5	3/8	1/4	380	3	50	E-5	—	DIRECT	SEE NOTE 1,3,4
EF-MG-11	TOILET	R-CTFG-GP	610	360	–	–	1100	9.5	3/8	1/4	380	3	50	E-4	—	DIRECT	SEE NOTE 1,3,4
EF-MG-12	TOILET	R-CTFG-GP	610	360	–	–	1100	9.5	3/8	1/4	380	3	50	E-4	—	DIRECT	SEE NOTE 1,3,4
EF-MG-13	HOSE REEL	IL-CTFG	1185	700	–	–	2995	178	7	1-1/2	220	1	50	E-4	—	DIRECT	SEE NOTE 1,3,4
EF-MG-14	HOSE REEL	IL-CTFG	1185	700	–	–	2995	178	7	1-1/2	220	1	50	E-4	—	DIRECT	SEE NOTE 1,3,4
EF-MG-15	WELDING HOOD	R-CTFG-UB	1700	775	–	–	1370	38	1-1/2	2	220	1	50	E-4	—	DIRECT	SEE NOTE 1,3,4
EF-MG-16	WELDING HOOD	R-CTFG-UB	1700	775	–	–	1370	38	1-1/2	2	220	1	50	E-4	—	DIRECT	SEE NOTE 1,3,4

MANUFACTURER SHALL PROVIDE NECESSARY TRANSFORMERS ON ALL UNITS TO MEET ELECTRICAL REQUIREMENT.

NOTES:

NOTE 1. SUPPLIED WITH BACKDRAFT DAMPER

NOTE 2. ALL EXHAUST FANS WITH SINGLE PHASE POWER ARE TO BE PROVIDED WITH A FACTORY MOUNTED DISCONNECT SWITCH.

NOTE 3. FAN SHALL BE AMCA OR VDMA TYPA "A" SPARK RESISTANT AND EXPLOSION PROOF CONSTRUCTION. ALL PARTS EXPOSED TO AIR FLOW SHALL BE COATED WITH EPOXY PAINT.

FAN SCHEDULE TYPE – LEGEND
(REF. EXHAUST AND SUPPLY FAN SCHEDULES)

R-CTFG-GP

R =ROOF
W =WALL
IL =INLINE
CL =CEILING

GP = GENERAL PURPOSE
EP = EXPLOSION PROOF
DB = DOWN BLAST
UB = UP BLAST
UT = UTILITY SET

CTFG = CENTRIFUGAL
PROP = PROPELLER
TUBA = TUBE AXIAL

* RADIAL BLADE CENTRIFUGAL WHEEL, AMCA ARR. 10 INDUSTRIAL BLOWER. SEE TAILPIPE EXH. SPEC.

ELECTRIC UNIT HEATER SCHEDULE (UH)

UNIT NUMBER	HEATING CAPACITY TOTAL (KW)	AIRFLOW CAPACITY TOTAL (BTUH)	ELECTRICAL DATA			REMARKS
			VOLTS	PHASE	HERTZ	
UH-1	2.0	510	220	1	50	

CEILING FAN SCHEDULE (CF)

UNIT NUMBER	QTY.	TYPE (NOTE 1)	FAN DIAMETER	MAX WATTS	ELECTRICAL DATA			REMARKS
					VOLTS	PHASE	HERTZ	
CF-1	4	A	35 in	65	220	1	50	3-SPEED
CF-2	4	A	35 in	65	220	1	50	

NOTES:-

1- (A) WITHOUT LIGHT FIXTURE
2- BOTTOM OF FAN MOUNTING HEIGHT = MINIMUM 2500mm A.F.F
3- PROVIDE WITH REMOTE WALL MOUNTED, ON-OFF SWITCH LOCATED ON ELECTRICAL DRAWINGS.

(PACKAGED) HEATING-VENTILATION UNIT (HV)

UNIT NUMBER	OUTSIDE AIR		FAN SECTION			FILTER SECTION				DIESEL HEATER SECTION			ELECTRICAL DATA			CONTROL DIAGRAM	INTERLOCKED EQUIPMENT	REMARKS
	SUMMER CMH	WINTER CMH	TOTAL CMH	EXTERNAL SP (MM-WG)	KW	FACE VELOCITY MPS	EFF. %	AIR PRESSURE DROP (MM-WG) INT	AIR PRESSURE DROP (MM-WG) FNL	CAPACITY KW	TEMP. RISE °C	EFF. %	VOLTS	PHASE	HERTZ			
HV-MB-01	14,040	5880	14,040	20	7.5	2.54	35	5	25	113	42.4	85	380	3	50	SEE SHT. MG-M-05	EF-MG-1,2,3	NOTE 1,2,4
HV-MB-02	12,00	5200	12,00	20	7.5	2.54	35	5	25	97	42.6	85	380	3	50	SEE SHT. MG-M-05	EF-MG-5,6,7	NOTE 1,3,4

1. MANUFACTURER SHALL PROVIDE NECESSARY TRANSFORMERS ON ALL UNITS TO MEET ELECTRICAL CONTROL REQUIREMENTS.
2. EWF-MG-01 IS INTERLOCKED TO RUN IN HEATING MODE; EF-MG-01, EF-MG-02 AND EF-MG-03 ARE INTERLOCKED TO RUN IN VENTILATION MODE.
3. EWF-MG-01 IS INTERLOCKED TO RUN IN HEATING MODE; EF-MG-05, EF-MG-06 AND EF-MG-07 ARE INTERLOCKED TO RUN IN VENTILATION MODE.
4. PROVIDE 900 LITER STORAGE TANK.

SPLIT SYSTEM AIR CONDITIONING HEAT PUMP SCHEDULE (SU/CU)

UNIT NO.	CAPACITY * (KW)		AIR QUANTITY CMH	ELECTRICAL DATA				REMARKS
	COOLING	HEATING		KW	VOLTS	PH	HZ	
SU-1 CU-1	1.5	1.5	380	0.9	220	1	50	HIGH WALL MOUNTED INDOOR UNIT (1)
SU-2 CU-2	2.6	2.0	615	1.5	220	1	50	HIGH WALL MOUNTED INDOOR UNIT (1)

* MINIMUM EQUIPMENT CAPACITY AS RATED AT 36 °C DB/16.7 °C WB (SUMMER OUTDOOR TEMPERATURE)
AT -12.8 °C DB (WINTER OUTDOOR TEMPERATURE)
AT 2133 M ELEVATION

(1) PROVIDE AUXILIARY ELECTRIC HEATING COIL IN THE INDOOR UNIT TO SUPPLEMENT HEAT PUMP CAPACITY OR TO MEET LOW AMBIENT OPERATIONS IN WINTE. POWER REQUIREMENTS SHALL BE ADJUSTED ACCORDINGLY.

DRAWING NOT TO SCALE

SYMBOL	DESCRIPTION	DATE	APR

DESIGNED BY: F.MAKKOOH
DATE: 06-27-07
DWN BY: A.LATIF
SUBMITTED BY: R. CREWAL CHIEF, BLDG SYSTEMS
CHK BY: A.MAKRAM
FILE NO.: AF0707MG-M-04

US Army Corps of Engineers Transatlantic Programs Center

ANA REGIONAL BRIGADE
PAKTIKA, AFGHANISTAN
BRIGADE & GARRISON HQ COMPLEX
MAINTENANCE GARAGE (9 BAY)
SCHEDULES

SHEET REFERENCE NUMBER:
PJ
MG-M-04

$(getvar, "dwgprefix")$(getvar, "dwgname")$(edtime, O, MON DD"", YYYY - H:MMam/pm)

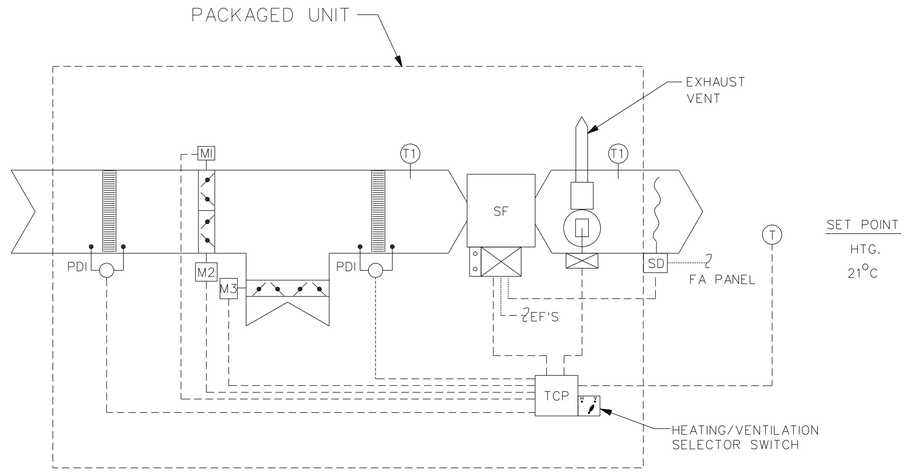

TEMPERATURE CONTROL DIAGRAM
(HV-MG-01, HV-MG-02)

PACKAGED HEATING-VENTILATION UNIT -SEQUENCE OF OPERATION

START-UP
THE SUPPLY FAN (SF) SHALL BE STARTED MANUALLY BY PLACING THE HAND-OFF-AUTO SWITCH AT THE CONTROL PANEL IN THE HAND POSITION. IN THE AUTO POSITION A PROGRAMMABLE TIME CLOCK SHALL START/STOP THE FAN.

OPERATING MODES
HEATING OR VENTILATION MODE SELECTION SHALL BE CONTROLLED OFF A HEATING-VENTILATION SELECTION SWITCH ON THE CONTROL PANEL. THE UNIT SHALL OPERATE AS A 100% OA VENTILATION UNIT BY PLACING THE MODE SWITCH IN THE VENTILATION MODE. IN THE HEATING MODE THE UNIT SHALL PROVIDE MINIMUM FRESH AIR VENTILATION AND EXHAUST MAKE-UP AIR.

DAMPERS
VENTILATION MODE: THE OUTSIDE AIR (OA) DAMPER M1 AND M2 SHALL BE INTERLOCKED TO OPEN WHEN THE FAN IS ENERGIZED AND CLOSE WHEN FAN IS DEENERGIZED. THE RETURN AIR DAMPER M3 SHALL STAY CLOSED.
HEATING MODE: THE OUTSIDE AIR DAMPER (M1) AND RETURN AIR DAMPER (M3) SHALL OPEN WHEN THE FAN IS ENERGIZED AND CLOSE WHEN THE FAN IS DEENERGIZED. OA DAMPER M2 SHALL STAY CLOSED.

FILTER
PRESSURE DIFFERENTIAL INDICATOR (PDI) PROVIDES LOCAL INDICATION OF PRESSURE DROP ACROSS THE FILTER. ON A RISE IN PRESSURE DROP TO ITS SET POINT, PRESSURE DIFFERENTIAL SWITCH SHALL TURN ON THE DIRTY FILTER ALARM LIGHT AT THE CONTROL PANEL.

TEMPERATURE CONTROL
HEATING (WINTER) MODE: THE DIESEL OIL HEATER (DH) SHALL BE STAGED BY A SPACE THERMOSTAT (T) TO CONTROL THE SUPPLY AIR TEMPERATURE OFF THE UNIT.
VENTILATION (SUMMER) MODE: HEATER CONTROLS SHALL BE LOCKED OUT DURING THE SUMMER MODE.
FAN INTERLOCKS
THE SMOKE DETECTOR (SD) SHALL BE INTERLOCKED TO STOP THE SUPPLY FAN (SF) IN THE EVENT OF SMOKE IN THE SUPPLY DUCT. THE SMOKE DETECTOR SHALL BE CONNECTED TO THE BUILDING FIRE ALARM PANEL.

THE EXHAUST FANS (EF) INDICATED IN THE HCU UNIT SCHEDULE SHALL BE INTERLOCKED TO RUN WITH THE SUPPLY FAN (SF).

DRAWING NOT TO SCALE

SYMBOL	DESCRIPTION	DATE	APR

DESIGNED BY: F.MAMDOH
DATE: 06-27-07
DWN BY: A.LATIF
SUBMITTED BY: R. CREWAL CHIEF, PDT BLDG SYSTEMS
CHK BY: A.MAKRAM
FILE NO.: AF0707MG-M-05

US Army Corps of Engineers Transatlantic Programs Center

ANA REGIONAL BRIGADE
PAKTIKA, AFGHANISTAN
BRIGADE & GARRISON HQ COMPLEX
MAINTENANCE GARAGE (9 BAY)
TEMPERATURE CONTROL DIAGRAMS

SHEET REFERENCE NUMBER:
PJ
MG-M-05

$(getvar, "dwgprefix")$(getvar, "dwgname")$(edtime, 0, MON DD",", YYYY - HH:MMam/pm)

PAKTIKA ANA BRIGADE

PAKTIKA, AFGHANISTAN

26 June 2007

US Army Corps of Engineers
Transatlantic Programs Center

PROJECT TABLE OF CONTENTS

DIVISION 01 - GENERAL REQUIREMENTS

01015 TECHNICAL REQUIREMENTS

DIVISION 02 - SITE CONSTRUCTION

02220 DEMOLITION
02231 CLEARING AND GRUBBING
02300 EARTHWORK
02315 EXCAVATION, FILLING AND BACKFILLING FOR BUILDINGS
02316 EXCAVATION, TRENCHING, AND BACKFILLING FOR UTILITIES SYSTEMS

DIVISION 03 - CONCRETE

03100 STRUCTURAL CONCRETE FORMWORK
03200 CONCRETE REINFORCEMENT
03256 HYDROPHILIC RUBBER WATERSTOPS
03300 CAST-IN-PLACE STRUCTURAL CONCRETE
03351 PENETRATING LIQUID CONCRETE FLOOR TREATMENT

DIVISION 04 - MASONRY

04200 MASONRY

DIVISION 05 - METALS

05120 STRUCTURAL STEEL
05500 MISCELLANEOUS METAL
05811 EXPANSION JOINT SYSTEMS

DIVISION 06 - WOOD AND PLASTICS

06411 ARCHITECTURAL CASEWORK

DIVISION 07 - THERMAL AND MOISTURE PROTECTION

07112 BITUMINOUS DAMPPROOFING
07212 MINERAL FIBER BLANKET INSULATION
07214 BOARD AND BLOCK INSULATION
07416 STRUCTURAL STANDING SEAM METAL ROOF (SSSMR) SYSTEM
07600 SHEET METALWORK, GENERAL
07720 RIDGE VENTS AND ROOF VENTILATORS
07840 FIRESTOPPING
07900 JOINT SEALANTS

DIVISION 08 - DOORS AND WINDOWS

08110 STEEL DOORS AND FRAMES
08330 OVERHEAD ROLLING DOORS
08520 ALUMINUM WINDOWS
08581 BLAST RESISTANT TEMPERED GLASS WINDOWS
08710 DOOR HARDWARE
08810 GLASS AND GLAZING

DIVISION 09 - FINISHES

09100 METAL SUPPORT ASSEMBLIES
09225 CEMENT PLASTER
09250 GYPSUM BOARD
09310 CERAMIC TILE, QUARRY TILE, AND PAVER TILE
09421 TERRAZZO TILE
09900 PAINTS AND COATINGS

DIVISION 10 - SPECIALTIES

10191 CUBICLE CURTAIN, TRACK AND HARDWARE
10201 METAL WALL AND DOOR LOUVERS
10270 ACCESS FLOORING
10800 TOILET ACCESSORIES

DIVISION 11 - EQUIPMENT

11025 FORCED ENTRY RESISTANT COMPONENTS
11193 DETENTION HOLLOW METAL FRAMES, DOORS, AND DOOR FRAMES
11194 DETENTION HARDWARE
11311 PARALLEL PLATE , GRAVITY OIL-WATER SEPARATOR FOR POWER PLANT
11400 FOOD SERVICE EQUIPMENT
11405 PREFABRICATED WALK-IN REFRIGERATORS AND COOLERS

DIVISION 12 - FURNISHINGS

12600 FURNITURE, FURNISHINGS AND EQUIPMENT (FFE)

DIVISION 13 - SPECIAL CONSTRUCTION

13080 SEISMIC PROTECTION FOR MISCELLANEOUS EQUIPMENT
13090 X-RAY SHIELDING
13100 LIGHTNING PROTECTION SYSTEM
13121 METAL BUILDING SYSTEMS
13202 FUEL STORAGE SYSTEMS
13214 WASTE PETROLEUM TANKS
13216 UNDERGROUND PETROLEUM TANKS
13401 FLOW MEASURING EQUIPMENT
13855 FIRE DETECTION EQUIPMENT

DIVISION 14 - CONVEYING SYSTEMS

14630 OVERHEAD ELECTRIC CRANES

DIVISION 15 - MECHANICAL

15050 BASIC MECHANICAL MATERIALS AND METHODS
15080 THERMAL INSULATION FOR MECHANICAL SYSTEMS
15192 FUEL OIL PIPING
15193 GASOLINE/DIESEL DISPENSING SYSTEMS
15400 PLUMBING, GENERAL PURPOSE
15690 EVAPORATIVE COOLING SYSTEMS
15700 UNITARY HEATING AND COOLING EQUIPMENT
15702 COMPUTER ROOM AIR CONDITIONING UNITS
15768 ELECTRIC SPACE HEATING EQUIPMENT
15835 CEILING FANS
15895 AIR SUPPLY, DISTRIBUTION, VENTILATION, AND EXHAUST SYSTEM
15950 HEATING, VENTILATING AND AIR CONDITIONING (HVAC) CONTROL SYSTEMS

15990 TESTING, ADJUSTING, AND BALANCING OF HVAC SYSTEMS

DIVISION 16 - ELECTRICAL

16050 BASIC ELECTRICAL MATERIALS AND METHODS
16070 SEISMIC PROTECTION FOR ELECTRICAL EQUIPMENT
16175 LOCAL CONTROL PANELS FOR SYSTEMS
16263 DIESEL-GENERATOR SET STATIONARY 100-2500 KW, WITH AUXILIARIES
16272 UNIT SUB-STATION TYPE TRANSFORMERS
16370 ELECTRICAL DISTRIBUTION SYSTEM, AERIAL
16375 ELECTRICAL DISTRIBUTION SYSTEM, UNDERGROUND
16402 INTERIOR DISTRIBUTION SYSTEM
16403 PANELBOARDS
16410 AUTOMATIC TRANSFER SWITCHES
16442 SWITCHBOARDS AND SWITCHGEAR
16475 POWER SYSTEM
16510 INTERIOR LIGHTING
16710 BUILDING TELECOMMUNICATIONS CABLING SYSTEM
16711 TELECOMMUNICATIONS OUTSIDE PLANT (OSP)
16713 FIBER OPTIC (FO) OUTSIDE PLANT (OSP) MEDIA

-- End of Project Table of Contents --

SECTION 01015
TECHNICAL REQUIREMENTS

1. GENERAL

1.1 The Contractor's design and construction must comply with technical requirements contained herein. The Contractor shall provide design and construction using the best combination of cost, construction efficiency, system durability, ease of maintenance and environmental compatibility. The Contractor is responsible for master planning and site design; site development, including grading and storm water management; water well, water line, sanitary sewer, and storm sewer construction; road construction; electric; security systems, communications systems and utility buildings required in support of infrastructure and utilities.

1.2 These design and product requirements are minimum standards. The Contractor is encouraged to propose alternate design or products (equipment and material) that are more commonly used in the region; equipment and materials will be equally or more cost effective or allow for more timely completion, but furnish the same system durability, ease of maintenance and environmental compatibility. The Contractor will be required to submit information as requested by the Contracting Officer to make a comparison of the proposed alternate. All variations must be approved by the Contracting Officer. Life expectation for this facility is for twenty-five (25) years minimum. Material and methods used for this project must meet this design requirement. All requirements set forth in the RFP, but not included in the Scope of Work (SOW) shall be considered as set forth in both, and vice versa. Contractor shall provide all hardware, fixtures, etc. to make this a complete usable facility. Any time two or more statements in the RFP, building codes, or standards are in conflict; the most stringent shall apply.

This project consists of new construction of the infrastructure and buildings for an ANA Brigade as defined in Section 01010 SCOPE OF WORK and shall be executed in accordance with the following requirements. The site for this contract is at Paktika, Afghanistan.

1.3 ASBESTOS CONTAINING MATERIALS

Asbestos containing material (ACM) shall not be used in the design and construction of this project. If no other material is available which will perform the required function or where the use of other materials would be cost prohibitive, a waiver for the use of asbestos-containing materials must be obtained from the Contracting Officer.

1.4 SAFETY

1.4.1 UXO/MINE DISCOVERY DURING PROJECT CONSTRUCTION

It is the responsibility of the Contractor to be aware of the risk of encountering UXO and to take all actions necessary to assure a safe work area to perform the requirements of this contract. If, after the entire site has been cleared of UXO/mines per the International Mine Action Standards (IMAS) and clearance is done to the anticipated

foundation depth, the Contractor becomes aware of or encounters UXO or potential UXO during construction, the Contractor shall immediately stop work at the site of the encounter, move to a safe location, notify the COR, and mitigate any delays to scheduled or unscheduled contract work. The Contractor shall remove and dispose of UXOs per the International Mine Action Standards (IMAS). These standards can be found at http://www.mineactionstandards.org. The Contractor assumes the risk of any and all personal injury, property damage or other liability, arising out of and resulting from any Contractor action hereunder. In these cases, the Contractor shall be required to identify and dispose of the ordnance.

NOTE: For previous Demining information, the following points of contact
from the UN Mine Action Center for Afghanistan are provided:

Reiko Kurihara, project manager, email reiko@unmaca.org
Cell phone: +93 070 284 686
Sandy Powell, chief Operations Officer, sandy@unmaca.org
Cell phone: +93 (0) 79 330 992

1.4.2 ACTIVITY HAZARD ANALYSIS (AHA)

a. Activity Hazard Analysis shall be prepared in accordance with the Corps of Engineers Safety and Health Requirements Manual, EM 385-1-1.

b. Hazard analyses will be prepared and briefed by personnel that are knowledgeable in UXO and explosives safety standards and requirements. These personnel should understand the specific operational requirement and hazard analysis methodologies. A hazard analysis will be performed for each activity to determine the significance of any potential explosive-related hazards. Explosive residues may be discovered or exposed during UXO operations in the form of powder or various granular and powder based pellets. These contaminants can enter the body through the skin or by ingestion if proper personal hygiene practices are not followed. Explosive fillers such as white phosphorus are dangerously reactive in air and acute exposure can result in serious injury to the skin, eyes, and mucous membranes. They are also a fire hazard.

Safety requirements (or alternatives) that will either eliminate the identified hazards, mitigate or control them to reduce the associated risks to an acceptable level will be developed. The adequacy of the operational and support procedures that will be implemented to eliminate, control, or abate identified hazards or risks will then be evaluated and a second risk assessment completed to verify that a satisfactory safety level has been achieved.

1.5 NOTIFICATION OF NONCOMPLIANCE

The Contracting Officer will notify the Contractor of any detected noncompliance with the foregoing requirements. The Contractor shall take immediate corrective action after receipt of such notice. Such notice, when delivered to the Contractor at the work site, shall be deemed sufficient for the purpose of notification. If the Contractor fails or refuses to comply promptly, the Contracting Officer may issue an order stopping all or part of the work until satisfactory corrective action has been taken. The Contractor shall make no part of the time

lost due to such stop orders the subject of claim for extension of time or for excess costs or damages.

1.6 WARRANTY

The Contractor shall repair and/or replace all defective materials or workmanship, except for roofs, at his own cost for a warranty period of one (1) year commencing upon the date of final acceptance of the entire project. See roof construction under RFP for warranty.

1.7 TEMPORARY STRUCTURES

The Contractor shall erect suitable temporary fences, lighting, and necessary structures to safeguard the site, materials and plant against damage or theft and for the protection of the general public and shall adequately maintain the same throughout the course of the contract.

1.8 MAN-HOUR EXPOSURE REPORTING REQUIREMENTS

Prime Contractors are required to maintain records for both prime and subcontractor employees to include exposure work hours, a log of occupational injuries and illness and local/international economic data. The Prime Contractor shall submit the information on CEAED Form 385-1-1 to the COR by the 25th of each month. The COR shall submit the information to the Chief, Safety, and the AED Economist by the end of the month. The COR shall assure that the form is properly filled out and that the complete contract number or task order number are clearly indicated. Section III of the form is the Economic Analysis Report and it must contain data itemized by location if the contract has more than one work location. It is extremely important that the economic data be broken out by work location. The contractor may develop their own spreadsheet for a contract with multiple work sites provided the spreadsheet includes the basic information detailed on the Economic Data Report. Accident exposure data does not need to be itemized by location and should be submitted as a total for the entire contract.

2. CIVIL - NOT USED

3. ARCHITECTURAL

3.1 GENERAL

3.1.1 The Scope of Work is stated in Section 01010. All materials approved shall become standardized material to be used throughout the facilities under contract. Different sub-contractors shall not use different materials or standards under the contract.

3.1.2 Intent of the project is to meet the requirements per the RFP, Codes and Standards, and if possible use locally procured materials and labor to the maximum extent possible.

3.1.3 The site is located on undeveloped land. Reference the site map for the project location.

3.1.4 The Contractor shall survey and produce detailed documentation of the site utilities, buildings, and systems for the entire compound. Contractor shall perform detailed site measurement as needed to verify

available printed and electronic documentation. Drawings shall clearly distinguish existing conditions for work performed under this contract. Documentation work shall be performed on computer assisted design and drafting (CADD). New documentation shall be performed on AutoCAD version 2006, conforming to A/E/C Tri Services standards. Units shall be metric. Language for all documents shall be in American English.

3.2 DESIGN PRODUCTS

3.2.1 General

The following are contract deliverables which expound upon and finalize the Design parameters/requirements outlined within the contract documents. They shall be prepared in such a fashion that the Prime Contractor is responsible to the Government and not as an internal document between the Prime Contractor and its Sub Contractors, Vendors, Suppliers, etc.

3.2.2 Design Analysis

The design analysis should be written in the English Language for review by the Government for all buildings and to have indexes, table of contents and each page numbered. Each building shall be listed as indicated in Section 01010. The design analysis is a written explanation of the project design which is expanded and revised (updated) as the design progresses. The design analysis shall contain all explanatory material giving the design rationale for any design decisions which would not be obvious to an engineer reviewing the final drawings and specifications. The design analysis contains the criteria for and the history of the project design, including criteria furnished by the Government, letters, codes, references, conference minutes, and pertinent research. Design calculations, computerized and manual, are included in the design analysis. Narrative descriptions of design solutions are also included. Written material may be illustrated by diagrams and sketches to convey design concepts. Catalog cuts and manufacturer's data for all equipment items required, shall be submitted. Copies of all previous design phase review comments and the actions assigned to them shall be included with each submission of the design analysis. Specific requirements for the design analysis, listed by submittal phase, are contained hereinafter. Provide Code Analysis for each building based on the following items and code sections.

3.2.3 Code Analysis

The following analysis information is required for all buildings submitted in this proposal. List: Seismic Design Category, Wind Speed, and Snow Load.

Analysis Items	Code References - International Building Code (IBC) 2003
1. Type of Construction	IBC Chapter 6
2. Occupancy Classification	IBC Chapter 3 and Table 302.3.2

3. Actual Allowable Area	IBC 503, 505-508 & Table 503
4. Actual Allowable Height	IBC 504 & Table 503
5. Occupant Load (per use)	IBC 1004 & Table 1004.1.2
6. Exits Required/Provided	IBC 1004 & Table 1004.1.2
	IBC 1014, 1018, and 1018.2
7. Required Opening Protection	IBC Table 602
8. Fire Resistive Construction	IBC Table 601

3.2.4 Design Calculations

The design calculations shall be presented in a clean and legible form incorporating a title page and index.

3.2.5 Specifications

Specifications developed for fully designed facilities shall be used. Utility buildings, that will be design-build, shall match the fully designed facilities for type of construction, finishes and overall characteristics. SpecsIntact shall be used for specifications format.

3.2.6 Ambiguities and indefinite specifications

Ambiguities, indefinite specification requirements (e.g., highest quality, workmanlike manner, as necessary, where appropriate, as directed etc.) and language open to interpretation is unacceptable.

4. STRUCTURAL

4.1 Design

Design shall be performed and signed by a structural engineer. The publications listed below form a part of this specification to the extent referenced. Other international standards that comply with these standards may be used upon approval by the Contracting Officer. The publications are referred to within the text by the basic designation only.

All required documents, including drawings, specifications, and design analysis, shall be prepared in accordance with Section 01335 Submittal Procedures for Design Build Projects. Specific submittal requirements in these sections supplement the requirements of Section 01335.

The design analysis shall include detailed calculations and any additional information required, and the information listed below, when applicable.

All structures and all parts of the structures shall be designed and constructed to support safely all loads without exceeding the allowable stress for the materials of construction in the structural members and connections.

4.2 References

American Society of Civil Engineers, Minimum Design Loads for Buildings and Other Structures, ASCE 7-2002

American Concrete Institute, Building Code Requirements for Structural Concrete, ACI-318-2005

International Building Code, IBC-2003

American Society for Testing and Materials (ASTM) Publication, Deformed and Plain Billet-Steel Bars for Concrete Reinforcement, ASTM A 615-2004b

ASTM Publication, Steel Welded Wire Fabric, Plain for Concrete Reinforcement ASTM A 185-2002

ASTM Publication, Potential Alkali Reactivity of Aggregates (Mortar-Bar Method)

American Institute of Steel Construction, Specifications for Structural Steel Buildings, AISC – 9th Edition

American Iron and Steel Institute, Specifications for Design of Cold-Formed Steel Structural Members AISI – 1996

Building Code Requirements for Masonry Structures, ACI 530-2005/ASCE 5-2005/TMS 402-2005.

Metal Building Manufacturers Association. MBMA Low Rise Building System Manual - 2002

4.3 Dead and Live Loads

Dead and live loads used for design shall be in accordance with the International Building Code IBC-2003. Bridges shall be designed for all the applicable design loads and load combinations as defined by the AASHTO Code.

4.4 Wind Loads

Wind loads shall be calculated in accordance with IBC-2003 design standards using a "3-second gust" wind speed of 125 km/hr.

4.5 Seismic

The structure and all parts thereof shall be designed for the seismic requirements as defined by the International Building Code, IBC 2003. For Afghanistan, use Spectral Response S_s= 1.28g and S_1=0.51g, Site soil classification will be determined by Geotechnical investigations at site.

4.6 Concrete

Concrete shall be in accordance with Specification 03300.

4.7 Structural Steel

Structural steel shall be designed and constructed in accordance with the provisions of AISC 13th Edition and design of cold-formed steel structural members shall be in accordance with the provisions of American Iron and Steel Institute, Specifications for Design of Cold-Formed Steel Structural Members-1996, and specification 05120.

4.8 MASONRY.

Masonry shall be designed and constructed in accordance with the provisions of ACI 530-2005/ASCE 5-2005/TMS 402-2005. Mortar shall be Type S and conform to ASTM C 270-94. Masonry shall not be used below grade. Masonry shall be in accordance with Specification 04200.

4.9 PRE-ENGINEERED METAL BUILDING SYSTEM.

Metal building systems shall be in accordance with Specification 13121.

4.10 Force Protection.

Force protection shall comply with the requirements of CENTCOM AT/FP and DoD Minimum Antiterrorism Standards for Buildings; UFC 4-010-01 for medium level of protection.

4.11 Foundations

Foundations shall be in accordance with the Geotechnical requirements of the site and manufactures recommendations.

5. GEOTECHNICAL INVESTIGATION AND REPORT

5.1 Site Specific Information

Site specific geotechnical information necessary to design and construct the foundations, pavements, and other geotechnically related items contained in this project shall be the Contractor's responsibility. Many facilities in this project have already been fully designed based on geotechnical assumptions, not on actual site conditions. The Contractor is responsible for verifying, from his geotechnical investigation as described herein, that all designs presented in this project package are sufficient and will function as intended. If the Contractor determines that designs are not sufficient for site conditions as determined by his geotechnical investigation, the Contractor shall contact the Contracting Officer for direction. The Contractor shall determine all necessary geotechnical conditions by appropriate field and laboratory investigations and supporting calculations. However, as a minimum for structures, the Contractor shall advance three (3) borings within the building footprint of any major structure and three (3) test pits within the building footprint of any minor structure. The depths of these explorations shall be sufficient to determine the subsurface conditions within the influence of the structure's foundation system. For purposes of this paragraph,

a major structure is any structure that meets any of the following criteria: a) reinforced concrete famed structures with a building footprint in excess of 1,000 sq. m., b) steel framed structures with a building footprint in excess of 3,000 sq. m., c) a structure that has a height equal to or greater than one and a half stories, d) steel or concrete tanks in excess of 350 cubic meters. A minor structure is any structure that does not meet any of the four major structure criteria above. As a minimum for pavements such as hard stands and parking lots, except roads, the Contractor shall excavate three (3) test pits for pavements less than or equal to 7,500 sq. m. and one (1) test pit for each additional 5,000 sq. m. of pavement or fraction thereof. As a minimum for roads, the Contractor shall excavate three (3) test pits for pavements less than or equal to 200 linear meters and one (1) test pit for each additional 200 linear meters or fraction thereof.

5.2 Geotechnical Report

The Contractor shall produce a detailed geotechnical report containing the field exploration and testing results, laboratory testing results, evaluations, recommendations, calculations and descriptive supporting text. Information in the report shall include, but not be limited to: existing geotechnical (e.g., surface and subsurface) conditions, location of subsurface exploration logs, exploration point, foundations selected, bearing capacity, pavement design criteria (e.g., CBR values, K Values), ground water levels, and construction materials (e.g., concrete cement, asphalt and aggregates). Two copies of the detailed geotechnical report shall be submitted to the Contracting Officer.

5.3 Geotechnical Qualifications

All geotechnical engineering design parameters shall be developed by a geotechnical engineer or geotechnical firm responsible to the Contractor. The geotechnical engineer or geotechnical firm shall be qualified by: education in geotechnical engineering; professional registration; a minimum of ten (10) years of experience in geotechnical engineering design.

5.4 Design Certification

The Contractor shall certify in writing that the design of the project has been developed consistent with the site-specific geotechnical conditions. The certification shall be stamped by the geotechnical engineer or geotechnical firm and shall be submitted with the final design.

6. MECHANICAL

6.1 SCOPE OF WORK

6.1.1 General

The Contractor shall design, supply, fabricate and install new heating, ventilation and air-conditioning systems and special mechanical systems in the facilities or structures required as part of site utilities systems facilities and as identified under the Civil and Architectural

narratives hereinbefore. Engineering practices recommended in ASHRAE Handbooks shall be followed in regard to special conditions and problems not specifically covered herein.

The work also includes the delivery to site, erection, setting to work, adjusting, testing and balancing, commissioning, and handing over in full operating conditions all of the ventilation equipment and associated mechanical works. All mechanical/electrical controls accessible by the general public shall be lockable and tamper proof.

6.1.2 Standard Products

All materials and equipment shall be standard product of a manufacturer regularly engaged in the manufacture of the product and shall comply with specification and performance requirements described in various mechanical construction specifications sections included in this contract.

6.1.3 Local Standards

Conflicts between criteria and local standards shall be brought to the attention of the Contracting Officer for resolution. In such instances, the Contractor shall furnish all available information with justification to the Contracting Officer.

6.1.4 Seismic Requirements

All mechanical and plumbing equipment and piping shall be installed to meet the seismic requirements as defined by the International Building Code, IBC 2000 and seismic response coefficients as identified in Paragraph 4 “Structural.”

6.2 DESIGN CRITERIA AND REQUIREMENTS

6.2.1 CODES, STANDARDS AND REGULATIONS

The design and installation of equipment, materials and works covered under the mechanical heating, air-conditioning and ventilation services shall conform to the following standards, codes and regulations as applicable except where otherwise indicated under particular clause. The publications to be taken into consideration shall be those of the most recent editions. Standards other than those mentioned herein may be accepted provided that the standards chosen are internationally recognized and meet the minimum requirements of the specified standards. The Contractor shall submit proof of equivalency to the Contracting Officer for approval.

IBC – International Building Code 2000

IMC – International Mechanical Code

NFPA - National Fire Protection Association

ASHRAE – American Society of Heating, Refrigeration and Air-Conditioning Engineers

AABC - Associated Air Balance Council (National Standards for Total System Balance)

ARI - Air-Conditioning and Refrigeration Institute

ASME - American Society of Mechanical Engineers

ASTM - American Society for Testing and Materials

AWS - American Welding Society

SMACNA - Sheet Metal and Air Conditioning Contractors' National Association

ACGIH - American Conference of Governmental Industrial Hygienists

6.2.2 Site Location:

Latitude: 32:00 degrees N
Longitude: 69:00 degrees E
Altitude: 2133 meters (7000 ft)

6.2.3 Outside Design Temperature

Summer: 36.1 C (97° F) DB and 16.7° C (62° F) WB.
Winter: -12.8° C (9° F) DB
Range of DB: Summer 11.1 °C (20° F)
Average Extreme Wind: 24 kph (15 mph)
Prevailing Wind Direction: XXX

6.2.4 Design Conditions

a. Inside Conditions: Summer.

Occupied, Administrative, and Special Use Areas: 25.5°C (78°F) DB, 50% RH.
Shop Areas: 29.4-38.8°C (85 - 102°F) DB.

b. Inside Conditions: Winter.

Occupied, Administrative, and Special Use Areas: 20°C (68°F) DB.
Shop Areas: Heated to 12.8 C (55 F) to prevent freezing of water lines or higher temperature if required for process control.

6.2.5 Ventilation Standards: Minimum

Ventilation (and air-conditioning) systems shall be designed to maintain positive pressure inside the building with respect to the exterior to minimize sand and dirt infiltration. This shall be achieved by allowing more outside air than total exhaust or make-up air requirements. Pressurization air shall typically range between 5-7 percent of the supply air.

(1) Administrative: 9.4 LPS (20 CFM) /person with air conditioning and 33.3 LPS/sq. m. (2 CFM/sq. ft.) with mechanical ventilation.

(2) Mechanical/Electrical Rooms: Mechanical ventilation sufficient to maintain space temperature.

(3) Maintenance Shop: 7 LPS (15 CFM)/person with air conditioning and 50 –83 LPS/sq. m. (3 to 5 CFM/sq. ft.) to maintain space temperature within 6 C (10F) of outdoor ambient if ventilation only is required.

(4) Toilet and Janitor Closets: Exhaust ventilation at 33.3 LPS / sq. m. (2 CFM per square foot of floor area) or 23.6 LPS (50 CFM) for each closet and urinal.

6.2.6 Roof and Wall Insulation. All facilities with comfort conditioning shall be provided with roof U-value of 0.142 W/(m².K) (0.025 BTU/hr/ft^2) and wall U-value of 0.43 W/(m².K) (0.077 BTU/hr/ft^2)or less. Buildings without comfort conditioning shall be insulated to prevent a build-up of internal temperature significantly above the ambient temperature.

6.2.7 Noise. The sound levels for various applications for both centrifugal and propeller type fans shall be as set forth in the ASHRAE Handbooks. Noise levels generated by HVAC systems shall not exceed NC 35 in occupied areas.

6.2.8 Smoke Detection. Smoke detection and emergency automatic controls shall be in accordance with NFPA 90A and NFPA 72.

6.2.9 Temperature Controls.

a. All central type air handling systems shall include seven-day programmable clock controls to allow for night setback and daily/weekend operational control settings for energy conservation.

b. Mini split units shall be equipped with wired controller with Cool/Heat/Auto/Fan operation modes, fan speed selection, temperature setting, timer and sleep modes and LCD display.

6.2.10 Mechanical Rooms

Locate main mechanical room on ground floor with doors opening to exterior. Access to mechanical spaces will be limited to authorized personnel. Mechanical closets shall be accessible from exterior or public corridor or breezeway.

6.2.11 Testing and Commissioning

The contract shall include specifications and requirements for testing and commissioning of all HVAC systems and equipment including air balancing, pressure testing and temperature controls. Complete testing shall be required of all systems. Government shall witness all testing, balancing and commissioning. The Contractor shall provide reports of all tests and commissioning results.

6.3 Equipment

6.3.1 Filtration

a. To reduce sand and dirt migration, outside air intakes shall be located as high as possible within architectural constraints. The intakes shall be sized so that free air velocities are below 2.54 MPS (500 FPM). All outside air intakes shall be through weatherproof louvers with a bird screen.

b. Medium efficiency (30 percent, as defined by ASHRAE 52 Dust Spot Efficiency Criteria) filters, the 50 mm (2 -inch) thick disposable panel type, shall be the second stage of filtration on all units requiring an inertial air separator, other wise they will be the first stage of filtration.

c. Wall and roof intakes and hoods shall have permanent washable metal mesh type filters for filtration of dust.

6.3.2 Heating

a. Heating shall be provided for facility to maintain the required winter indoor design temperature. The heating system shall consist of electric resistant heating coils located within the ductwork or within the air handling unit. The electric heating coils inside the standard air handling units shall be of open resistant type designed for direct exposure to the air stream. Duct mounted heaters shall be finned tubular (enclosed element) type. Electric heating coils shall be completely prepackaged and provided with the required temperature and safety controls.

b. Heating in small office areas shall be provided with ductless mini split units. If air-conditioning heat pumps are used for heating, these may require supplementary electric heating because of low winter ambient at this site. Supplementary heating may be provided either with auxiliary electric resistant heating coils or with baseboard type electric resistant convector heaters.

6.3.3 Ventilation

a. Outside fresh air shall be introduced into the building air handling systems. This air will be of sufficient quantities to maintain ventilation standards for occupants, make up air for exhaust systems, and provide and maintain a positive building and space pressure with respect to outdoors.

b. Toilet areas, shower rooms, janitor closets, and some storage rooms shall be provided with exhaust ventilation systems. The system shall generally consist of exhaust grill or register, ductwork, and wall or roof mounted centrifugal exhaust fan. The ventilation system shall be controlled by: time clock, individual switch, or wired in conjunction with buildings air handling system. Exhaust air shall be drawn in from adjacent spaces into each respective ventilated area through a door undercut when the transfer quantity is 50 CFM or less. For larger air quantities door louvers shall be used or the space may be supplied ducted air.

c. Mechanical exhaust ventilation systems where required shall be sized to maintain a space temperature of 5.6 degree C (10 degrees F) above outdoor ambient. The system shall be comprised of a centrifugal exhaust fan either roof or wall mounted, a motorized damper and wall intake louver set, filters, and thermostatic interlock controls.

e. Special maintenance or process functions that produces noxious fumes or vapors shall be provided with the mechanical exhaust system required to handle the process or pollutant. The system shall include: centrifugal exhaust fan, rigid and/or flexible ductwork, hoods, and necessary controls. Engine generator exhaust shall be piped and vented through exhaust muffler. Make-up air shall be filtered and provided using intake louvers or hoods with filters or a dedicated supply system. For small exhaust systems, make-up air may be pulled in from adjacent rooms or areas.

6.3.4 Air Conditioning

a. Air conditioning for smaller administrative and housing and support facilities shall be accomplished with the use of ductless mini split air conditioners/heat pump as a general rule. These units require little maintenance, provide individual control, and are easy to replace. If these are not equipped with outside air, fresh air ventilation requirements in each area must be satisfied from other air-conditioning system within the facility.

b. Split system air conditioners shall consist of two complete packaged units consisting of a remote air cooled condensing unit and matched evaporator blower unit or an air handling unit as described hereinbefore. The condensing unit shall be as described hereinafter.

c. Temperature Controls. All central type air handling systems shall include seven-day programmable clock controls to allow for night setback and daily/weekend operational control settings for energy conservation.

6.3.5 Refrigeration System

a. Direct Expansion (DX) air cooled condensing unit shall be located outdoors and mounted on slab-on-grade or roof or wall supported platform. Each unit shall consist of weatherproof casing, compressor(s), condenser coil, condenser fans, motor, and appurtenances. Compressor shall be of the hermetic or semi-hermetic reciprocating type. Refrigeration circuit shall be connected to the refrigeration circuit of the split system air conditioning unit enclosed within the unit housing consisting of coils, fans and electric motor drives.

b. Refrigerant: All refrigerants used shall conform to the “Montreal Protocol on Substances That Delete the Ozone Layer” September 1987, sponsored by the United Nations Environmental Programme and shall have Ozone Depletion Allowance (ODA) if 0.05 or less.

6.3.6 Diffusers, registers and grilles shall be factory fabricated of steel or aluminum and distribute the specified air quantity evenly over the space intended. The devices shall be round, half round, square, rectangular, linear, or with perforated face as determined by the

design. Units will be mounted in ceilings, high sidewalls, or directly to ductwork and shall be sized for the airflow to be delivered with a maximum NC rating of 35. Pressure loss through the diffuser shall be considered in sizing the duct system and the system static pressure calculations.

6.3.7 Branch Take-offs

Air extractors or 45° entry corners shall be provided at all branch duct take-offs. Manual volume control dampers shall be included at the branch duct take-offs as shown and where required to facilitate air balancing.

6.3.8 Duct & Piping Insulation.

All intake and supply ductwork, return and exhaust ductwork as required, chilled water equipment, piping, and accessories in air-conditioned facilities, shall be provided insulation and vapor barrier for thermal efficiency, to prevent condensation, and for energy conservation. Insulation exposed to weather or physical damage shall be protected with aluminum jacketing.

6.3.9 Wall Penetrations

Building wall penetrations shall be carefully made so as not to deteriorate the structural integrity of the wall system. Do not run conduit thru bond beams.

6.3.10 Fire and Smoke Dampers

Dampers shall be provided for protection of openings in walls, partitions or floors in accordance with NFPA 90A.

6.3.11 Control Wiring and Protection Devices

Control wiring and protection devices shall be the manufacturer’s standard, pre-wired, and installed at the factory. Operation of the control system shall be manufacturer’s standard configured for 220V/50Hz or 24V operation.

6.3.12 Thermostats

All thermostats shall be located near the return grills and mounted 1.5 meters above the floor and shall be easily accessible. In lieu of a thermostat, a temperature sensor may be located in the room location and connected to the control thermostat near the unit. Thermostats located inside occupied areas shall be provided with lockable covers.

6.3.13 Electric Motors

a. Motors shall be of sufficient size without operating in the service factor for the duty to be performed and will not exceed their full rated load when the driven equipment is operating at specified capacity under the most severe conditions likely to be encountered.

b. All motors exposed to 40.5°C temperature or greater shall be of the totally enclosed fan cooled (TEFC) type continuous duty classifications based upon 50°C ambient temperature of reference.

6.4 HVAC Systems

Requirements in various facilities shall be determined by the designer in coordination with site utility systems designers.

6.5 TESTING AND COMMISSIONING

6.5.1 General

After completing the work, but prior to building acceptance, the Contractor shall demonstrate that the ventilation systems are adjusted and operate correctly to fully satisfy the function for which these systems have been designed. The Contractor shall test, adjust, balance and regulate the system and its controls as necessary until the required designed conditions are met. The Contractor shall include tests for interlocks, safety cutouts and other protective devices to demonstrate safe operation. A description of all equipment or systems to be tested and balanced including the test procedures must be submitted prior to the scheduled testing that will be witnessed by the government. All such tests shall be carried out in the presence of the Contracting Officer or representative and full written records of the test data and final settings shall be submitted to the Contracting Officer.

6.5.2 The following tests data shall be submitted in a tabulated form:

a. Date and time of the test.
b. Outdoor DB and WB temperature.
c. Indoor Room Conditions: DB and WB temperatures and supply return and exhaust airflow.
d. Air Handling Equipment: Air quantities shall be measured by anemometer.

6.5.3 Following readings shall be recorded:

a. Supply, return and outside air CMH (CFM) supplied by each air handling system.
b. Total CMH (CFM) exhausted by each fan.
c. Motor speed, fan speed.(4)Input amperes and power input (KW) for each fan.

7. PLUMBING

7.1 SCOPE OF WORK.

7.1.1 General

The Contractor shall design and build domestic cold and hot water systems, waste, drain and vent systems, and fuel-oil storage and distribution systems (for emergency generators) required in the facilities identified hereinbefore in the Civil and Architectural

paragraphs hereinbefore. The contractor shall be responsible for complete design and construction of all domestic and special plumbing systems required for full and safe operations in Water, Wastewater Treatment, and other facility or structures required as part of the site utilities design in this contract.

There are many facilities at the site that do not have domestic water requirements but are provided with a packaged Heat-Cool Unit located outside the facility. These units are designed for evaporative cooling and require potable water for cooling operation in summer. The contractor utilities designer shall include these water service requirements in its design and provide water connection to Heat-Cool Units as and where required. The service connection shall be designed to prevent freezing of water and allow complete draining of lines in the winter.

The work covered in this scope also includes the delivery to site, erection, setting to work, adjusting, testing and balancing and handing over in full operating condition all of the plumbing equipment and associated plumbing works.

7.1.2 Standard Products

All materials and equipment shall be standard product of a manufacturer regularly engaged in the manufacture of the product and shall comply with specification and performance requirements described in various mechanical construction specifications sections included in this contract

7.1.3 Local Standards

Conflicts between criteria and local standards shall be brought to the attention of the Contracting Officer for resolution. In such instances, the Contractor shall furnish all available information with justification to the Contracting Officer.

7.1.4 Seismic Requirements

All mechanical and plumbing equipment and piping shall be installed to meet the seismic requirements as defined by the international Building Code, IBC 2000 and seismic response coefficients as identified in Paragraph 4 “Structural.”

7.2 CODES, STANDARDS AND REGULATIONS

The design and installation of equipment, materials and works covered under the plumbing services shall conform to the following standards, codes and regulations where applicable except where otherwise indicated under particular clause. The publications to be taken into consideration shall be those of the most recent editions. Standards other than those mentioned herein may be accepted provided that the standards chosen are internationally recognized and meet the minimum requirements of the specified standards. The Contractor shall submit proof of equivalency if requested by the Contracting Officer.

IPC - International Plumbing Code
NFPA - National Fire Protection Association
ASHRAE - American Society of Heating, Refrigeration and Air-Conditioning Engineers
ASME - American Society of Mechanical Engineers
ASTM - American Society for Testing and Materials
AWS - American Welding Society

7.3 Plumbing Systems Requirements

a. Cold water shall be provided to the facility to serve the water usage and plumbing fixtures provided for the facility. Water service to each facility shall enter the building in a mechanical, toilet, storage, or similar type space. All water piping shall be routed parallel to the building lines and concealed in all finished areas. Insulation shall be provided where required to control sweating of pipes. Cold water piping shall be insulated using cellular glass or flexible elastomeric cellular insulation.

b. Plumbing Fixtures: Plumbing fixtures requirements shall be determined by the designer. Selected fixtures shall conform to specifications and requirements in Specification 15400 Plumbing , General Purpose and shall also comply with the following guidance:

   (1)All toilets shall be eastern style with a wall-mounted faucet and spray hose and shall be laid facing North/South away from Mecca, for cultural reasons.
   (2)Do not provide urinals for cultural reasons.

c. Floor drains shall be provided in each room that contains a water source. Floor drains shall be provided in the mechanical equipment and toilet rooms as required. Drains shall be located near urinals or toilet partitions in toilet rooms. In mechanical rooms, floor drains shall be provided to avoid running drain piping long distances above or over the floor. Provide all floor drains with deep-seal traps; Include provision of primer traps when required to prevent drying out of traps.

d. Hot water shall be provided for the facility to supply 140 degrees F (60 degree C) hot water to fixtures and outlets requiring hot water. Hot water of a higher temperature shall be provided where required for special use or process. The hot water shall be generated using electric type water heater(s). The unit shall be located in a mechanical room, storage room, toilet/janitor room or similar type space. The unit shall be of the commercially available tank type having low or medium watt density electric heating elements. Hot water piping shall be routed parallel to the building lines and concealed within finished rooms. All hot water piping shall be insulated.

7.4 Corrosion

Pipe subject to corrosion passing through or under corrosive fill such as cinders, concrete, or other corrosive material, shall be protected against external corrosion by protective coating, wrapping, or other means which will resist such corrosion. Piping made of inherently noncorrosive material will be used to the greatest extent

possible. Dielectric unions shall be used where dissimilar metals are used in the same piping system.

7.5 Testing and Inspection.

Testing of each piping system shall be as per International Plumbing Codes. The contractor's designer shall specify that all new, altered, extended, or replaced plumbing systems shall be left uncovered and unconcealed until it has been tested and approved. The installation contractor shall furnish all equipment, materials, and labor required for testing a plumbing system. All such tests shall be carried out in the presence of the Contracting Officer and full written records of the test data and final settings shall be submitted to the Contracting Officer.

The final test shall include a smoke test for drainage and vent system and pressure test for the domestic water piping. After completing the work, the Contractor shall demonstrate that all plumbing systems operate to fully satisfy the function for which these systems have been designed. The Contractor shall test, adjust, balance and regulate the system and its controls as necessary until the required designed conditions are met. The Contractor shall include tests for interlocks, safety cutouts and other protective devices to demonstrate safe operation. After all tests are complete, the entire domestic hot and cold water distribution system shall be disinfected. The system shall not be accepted until satisfactory bacteriological results have been obtained.

8. NOT USED

9. ELECTRICAL

9.1 SCOPE OF WORK

9.1.1 General. Contractor shall design and construct Exterior manhole ductbank Primary and Secondary Power Distribution System, to include pad mounted transformer sub-stations and all building/facility service entrance cables from transformer sub-stations.. The Contractor shall design and construct any other required systems described in section 01015 not provided as part of the design drawings and specifications to ensure a complete and usable facilities, to include electrical systems required for scope of work described under the Civil section of 01015. The contractor shall construct in accordance with the contract design drawings, specifications, and section 01015: (a) Interior Secondary Distribution System (b) Lighting and power branch circuitry, (c) Premise telephone and network/data wiring and (d) Interior Fire Detection and Alarm System. The site power distribution system shall be designed for the ultimate demand loads plus 20% spare capacity.

9.1.2 Temporary Electrical Service: Contractor shall be responsible for providing necessary temporary electrical service to all facilities which may be built/occupied prior to the completion of the Power Plant. Temporary service to each facility shall meet all required electrical demands of that facility plus 20% for spare capacity and shall be operational until such time the Base Power Plant and the exterior power distribution system is in place and becomes operational.

9.1.3 All equipment shall be tested, commissioned, and operational at time of turn-over to the government. Contractor shall provide all necessary operating instructions, commissioning reports, spare parts, and related items at time of turn-over.

9.2 DESIGN AND CONSTRUCTION CRITERIA

9.2.1 Applicable Standards

ANSI/IEEE C57.12.22-1993 (R1998) - American National Standard for Transformers— Pad-Mounted, Compartmental-Type, Self- Cooled Three-Phase Distribution Transformers With High-Voltage Bushings, 2500 kVA and Smaller: High Voltage, 34 500 Grd Y/19 920 Volts and Below; Low Voltage, 480 Volts and Below

ANSI/IEEE Std 81-1983

ANSI/NETA ETT-2000

ANSI/NETA MTS 7.2.2-2001

ANSI/TIA/EIA-568 Commercial Building Telecommunications Cabling Standard

ANSI/TIA/EIA-569 Commercial Building Standard for Telecommunication Pathways and Spaces

ANSI/TIA/EIA-942 Telecommunications Infrastructure Standard for Data Centers

EIA ANSI/TIA/EIA-607: (1994) Commercial Building Grounding/Bonding Requirement Standard.

EIA ANSI/TIA/EIA-607: (1994) Commercial Building Grounding/Bonding Requirement Standard.

EIA ANSI/TIA/EIA-607 Commercial Building Grounding/Bonding Requirement Standard.

ETL 1110-3-412 Transformer Application Guide

ETL 1110-3-502, Telephone and Network Distribution System Design and Implementation Guide.

Factory Mutual (FM) Approval Guide-Fire Protection (2002).

IBC - International Building Code

IMC – International Mechanical Code

IPC – International Plumbing Code

IEEE C2 National Electrical Safety Code (NESC)

IEEE C57.12.28 - IEEE Standard for Pad-Mounted Equipment—Enclosure Integrity

IEEE C57.12.34-2004 - Errata to IEEE Standard Requirements for Pad-Mounted, Compartmental-Type, Self-Cooled, Three-phase Distribution Transformers (2500 kVA and Smaller)- High-Voltage: 34 500 GrdY/19 920 Volts and Below; Low Voltage: 480 Volts and Below

IEEE C57.12.80-2002 - IEEE Standard Terminology for Power and Distribution Transformers

IEEE 48 IEEE Standard Test Procedures and Requirements for Alternating-Current Cable Terminations 2.5 kV Through 765 Kv

IEEE Std 62™-1995 (R2005)

IEEE Std 81-1983

IEEE Std 81.2-1991

IEEE standard 400-1991

IEEE standard 519-1992

IEEE standard 602-1996 , Recommended Practices for Electric Systems in Health Care Facilities

IEEE standard 1100, Powering and Grounding Electronic Equipment (aka Emerald Book)

IESNA Lighting Handbook

International Electrical Testing Association Inc. (NETA) Acceptance Testing Specifications for Electrical Power Distribution Equipment and Systems

MIL-HDBK-1003/11 Diesel-Electric Generating Plants

MIL-HDBK-1004/21 Power Distribution Systems

MIL-HDBK-1012/3

NFPA 10, Portable Fire Extinguishers

NFPA 70, National Electrical Code

NFPA 72, National Fire Alarm Code, 2002 edition

NFPA 99, Health Care Facilities

NFPA 101, Life Safety Code, 2003 edition

NFPA 110, Emergency and Stand-by Power Systems, 2005

NFPA 780, Lightning Protection

TI 800-01 Design Criteria

TM 5-684 Facilities Engineering - Electrical Exterior Facilities

TM 5-688 Foreign Voltages and Frequencies Guide

TM 5-803-14 Site Planning and Design

TM 5-811-1 Design: Electrical Power Supply and Distribution

TM 5-811-3 Electrical Design: Lightning and Static Electricity Protection

UFC 1-200-01, Design: General Building Requirements, 31 July 2002

UFC 1-300-09N, Design Procedures, 25 May 2005

UFC 3-501-03N Electrical Engineering Preliminary Considerations

UFC 3-520-01 Interior Electrical Systems, 10 June 2002

UFC 3-530-01AN Design: Interior and Exterior Lighting and Controls 19 Aug 2005

UFC 3-540-04N Design: Diesel Electric Generating Plants 16 Jan 2004

UFC 3-550-03FA Electrical Power Supply and Distribution

UFC 3-550-03N Power Distribution Systems

UFC 3-560-10N, O&M: Safety of Electrical Transmission and Distribution Systems

UFC 3-600-01: Fire Protection Engineering for Facilities

UFC 4-010-01, Design: Minimum DoD Antiterrorism Standards for Buildings, 8 Oct 2003

UFC 4-010-02, DoD Minimum Antiterrorism Standoff Distances for Buildings, 8 Oct 2003

UFC 4-510-01, Design Medical Military Facilities

Underwriters' Laboratories (UL) Fire Protection Equipment Directory (2002).

USCINCCENT OPORD 97-1

UL 467 Grounding and Bonding Equipment

MIL-HDBK-1004/21 Power Distribution Systems

9.2.2 Design shall be in metric units.

9.3 MATERIAL

9.3.1 General

Unless noted otherwise, all material used shall be in compliance with the requirements of UL standards. In the event that UL compliant

materials are not available, Contractor may then select applicable British Standards (BS), IEC, CE, CSA, GS, or DIN listed material, but the contractor must prove equivalence and must provide the government with a full copy of the relevant specification(s). Material and equipment installed under this contract shall be for the appropriate application and installed in accordance with manufacturers recommendations.

Equipment enclosure types shall be in compliance with the National Electrical Manufacturer's Association (NEMA) or the International Electro-Technical Committee (IEC) standards.

Material and equipment installed under this contract shall be for the appropriate application. Materials and equipment shall be installed in accordance with recommendations of the manufacturer. Major components of equipment shall have the manufacturer's name, address, type or style, voltage and current rating, and catalog number on a non-corrosive and non-heat sensitive plate, securely attached to the equipment. All equipment delivered and placed in storage, prior to installation, shall be protected from the weather, humidity and temperature variation, dirt and dust, and any other contaminants. All equipment shall be in new condition, undamaged and unused.

9.3.2 Standard Product: All material and equipment shall be a standard product of a manufacturer regularly engaged in the manufacture of the product and shall essentially duplicate items that have been in satisfactory use for at least two (2) years prior to bid opening.

9.3.3 Design Conditions: All equipment shall be rated and designed for 50 Degree Centigrade and elevation of 2,000 meters above sea level.

All medium voltage installations shall comply with the requirements of the National Electrical Safety Code (NESC, aka IEEE C2) and the National Electrical Code (NEC, aka NFPA 70), as well as appropriate UFCs and IEEE standards listed above.

9.3.4 Restrictions: Aluminum conductors shall only be used for overhead lines. Aluminum windings shall **NOT** be used in transformers.

Any references to 120/208/220/277/480 volt, 60Hz systems in any code or standard shall be interpreted as 220/380 volt, 50Hz systems, unless otherwise modified or directed in this RFP. References in the National Electrical Code to 120 or 125 volt receptacles shall be taken to mean 220v receptacles.

9.4 DESIGN REQUIREMENTS

9.4.1 Site Primary & Secondary Power Distribution System

Primary (15kV ‘Delta’) and secondary power distribution (380/220V ‘Wye’) shall be underground. Design and installation of primary and secondary power distribution systems shall be complete and in compliance with the requirements of the National Electrical Safety Code (ANSI/IEEE C2), UFC 3-550-03FA (also called Army TM 5-811-1), National Electrical Code (NFPA 70), and other electrical references listed in this RFP. Site-wide primary power distribution system shall be designed (laid-out) to be serviced by a minimum of three (3) high

voltage feeders. All feeders shall be provided with feeder-to-feeder tie capabilities to transfer loads between feeders. Feeder tie points shall be located in the field and away from the Power Plant. Primary power distribution shall be complete, to include but not be limited to, fused cut-outs, arresters, terminals, cable guards, circuit breakers, transformers, and related items. All primary feeder taps shall be protected with fused cutouts. Long feeder runs shall be provided with sectionalizing devices, such as, in-line fuses, sectionalizer or reclouser, as necessary. Minimum of 3 fuses, with appropriate rating, shall be provided as spares at each fused cut-out location.

Primary Distribution shall be installed in accordance with the NESC, UFC 3-550-03FA, and other applicable standards listed in this RFP.

9.4.1.1 Raceways

Exterior raceways (conduits) shall be installed at a slope towards a manhole or hand-hole to avoid collection of water in the raceway. Conduit shall be PVC, thin-wall for concrete encasement and hard-wall (Schedule 40) for direct burial. Direct buried conduit shall only be installed for street lighting circuits. Direct buried conduits shall be encased in concrete, when under paved areas or under road crossings. High voltage cables shall be installed in conduit no less than 100mm (4 inch) in diameter. Secondary cable shall be installed in conduit no less than 50mm (2 inch). Direct buried conduit shall be installed 800mm (32 inch) below grade.

All underground conduits shall use long-sweeping elbows. All communications conduits shall use long-sweeping elbows.

9.4.2. Existing Services / Building Loads

Contractor shall connect all existing active electric services to facilities in the Base, to the new power distribution system provided under this contract. Connection of existing services to the new system shall be via appropriately sized pad-mount transformer(s) and coordinated with the Contracting Officer.

9.4.3 Provide telephone lines to the Corps, Brigade, and Battalion Headquarters Buildings.

9.4.4 Transformer Substations: Transformer substations shall be strategically located close to the loads. Dedicated transformer substations shall be provided for large loads. Transformers shall be Primary ‘Delta’ and Secondary ‘Wye’ connected. Primary side load-break disconnecting means shall be provided with all transformers. All transformers shall be sized for known projected demand loads, plus (+) 20% spare capacity for future growth. Transformer substations shall be dead-front, loop-feed, pad-mounted, compartmental, self-cooled type. Transformers shall come complete from manufacturer; use of third-party transformer housings or add-on transformer housings shall not be permitted. Transformers shall have no exposed live components.

Transformer selection, design, and installation shall be governed by NEC, NESC, ETL 1110-3-412, TM 5-684, UFC 4-510-01, UFC 3-550-03FA, UFC 3-550-03N, IEEE C57.12.28, ANSI/IEEE C57.12.22, IEEE C57.12.34, and C57.12.80.

Medical Clinic: Electrical system shall be designed as a double-ended substation, fed from two different feeder circuits, to two different transformers. Installation shall be per UFC 4-510-01 paragraphs 10.2.3 and 10.3 (including 10.3.1 thru 10.3.5) and figure 10-1. Power system for medical clinic shall be a "type 1 EES" as defined in NFPA 99. Size of transformers, generators, and power feeds shall be governed by UFC 4-510-01, NFPA 99, and the NEC. In case of conflict between transformer design criteria between the above named standards, UFC 4-510-01 shall govern; in cases where UFC 4-510-01 can not resolve the conflict, it shall be brought to the attention of the Contracting Officer for resolution.

9.4.5 Underground Conductors: All underground conductors shall meet the requirements of the codes and standards listed in this RFP, including but not limited to: NESC, NEC, UFC 3-550-03FA, and related.

9.4.6 Secondary Power Distribution System

Secondary Power shall be 380/220 volts, 3 phase, 4 wire, 50 Hz. Building secondary power distribution system shall include main distribution, lighting and power panels as required. All panel boards shall be circuit breaker 'bolt-on' type panels. In large buildings separate lighting and power panels shall be provided. The minimum size circuit breaker shall be rated at 20 amperes. Circuit breakers shall be connected to bus bar(s) within the panel boards. Daisy chain (breaker-to-breaker) connection(s) shall not be acceptable. Indoor distribution panels and load centers shall be flush mounted in finished areas. All circuit breakers shall be labeled with an identification number corresponding to the panel schedule. A 3-pole circuit breaker shall be a single unit and not made up of 3 single pole circuit breakers connected with a wire or bridged to make a 3-pole breaker. All wiring shall be copper, minimum # 12 AWG (4mm sq), recessed in finished areas and surface mounted in metal conduits in unfinished areas. All panels shall be provided with a minimum of 20% spare capacity for future load growth. Power receptacles (outlets) shall be duplex, 240 volts, 50 HZ, German (DIN) Standard. All splicing and terminations of wires shall be performed in a junction or device boxes. Proper wire nuts/connectors shall be used for splicing wire. No twist-wire connections with electrical tape wrapped around it shall be acceptable. All electrical installation shall be in accordance with the requirements of NFPA 70 (National Electric Code). Main Distribution Panel shall be provided with an ammeter, voltmeter and kilowatt-hour meter. Selector switch shall be provided for reading all 3 phases. All service entrance cables and equipment, such as main distribution panels etc., to the facilities shall be sized for the ultimate facility loads, to include any heating loads (infrared heating), initial and future provided by others.

9.4.6.1 Receptacles

General purpose receptacles shall be duplex, grounding (earthed) type, "flush" or "semi-flush" wall mounted type, color ivory and installed 500 mm above finished floor (AFF). In office or similar areas receptacles shall be provided at every 1.8 M intervals. In maintenance buildings 3-duplex receptacles shall be provided at each vehicle

maintenance bay. In storage buildings, receptacles shall be provided in 5 m intervals. In communications rooms, receptacles shall be provided at 1 m intervals or closer. CEE Type receptacles with plugs 2P+E (240v) or 3P+E (380v) and with appropriate rating, shall be provided for, but not be limited to, washers, dryers, kitchen equipment and any other type of large plug-able equipment. Receptacle shall be complete to include box, cover plate and necessary screws/connectors and of the type most commonly used in Afghanistan. Receptacles near sinks or lavatories shall be switch operated and Ground Fault Circuit Interrupter (GFCI), or Residual Current Disconnect (RCD) type, with the trip setting of 30 milliampere or less.

Sinks will have a receptacle above, with one dual receptacle serving two sinks that are side-by-side. Receptacles in wet/damp areas or within 1 meter (~3 feet) of sinks, lavatories, or wash-down areas shall be ground fault circuit interrupter (GFCI) type or Residual Current Disconnect (RCD) type, with the trip setting of 30 milliamperes or less.

Total number of duplex receptacles shall be limited to six (6) per 16- or 20-ampere circuit breaker.

Medical Clinic: Provide receptacles at patient beds per NEC 517.18 and 517.19. Provide and install electrical receptacles no more than three (3) meters apart on all other interior walls. All receptacles shall be Hospital Grade, per NEC requirements. Receptacles shall be complete to include box, cover plate and necessary screws/connectors and shall be type CEE 7/7. Provide no less than two separate 16A circuits per room, unless more are required per NEC, NFPA 99, and UFC 4-510-01.

9.4.6.2 Lighting

Light Fixtures: Lighting fixtures shall be a standard manufacturer’s product. Fluorescent light fixtures shall be power factor corrected and equipped with standard magnetic ballast(s). All light fixtures shall be capable of receiving standard lamps used locally. Light fixtures shall be mounted at 2.7M, minimum, AFF. Fixtures may be pendant or ceiling mounted, depending on the ceiling height. All fixtures shall be fully factory wired. Lighting levels shall be as follows:

General Office Space / Computer Rooms	40 FC (400 Lux)
Conference Rooms	30 FC (300 Lux)
Dinning Rooms	70 FC (700 Lux)
Laundry Rooms	30 FC (300 Lux)
Bed Rooms	30 FC (300 Lux)
Kitchen	70 FC (700 Lux)
Lobbies	15 FC (150 Lux)
Lounges	15 FC (150 Lux)
Mechanical & Electrical Equipment Rooms	20 FC (200 Lux)
Stairways	20 FC (200 Lux)
Toilets	20 FC (200 Lux)
Soccer Field with Bleachers & Running Track	30 FC (300 Lux)

Medical Clinic Lighting: Lighting in the medical clinic shall be per UFC 4-510-01 Appendix A. High frequency electronic ballasts shall NOT be used in the medical clinic.

9.4.6.2.1 High Ceilings

Contractor may provide high bay High Pressure Sodium (HPS) vapor light fixtures in facilities with high ceilings, provided that the replacement lamps for the fixtures are available locally.

9.4.6.2.2 Light Switch

Light switch shall be single pole. Minimum of one light switch shall be provided in every room. Lighting in large rooms/areas may be controlled from multiple switches. Lighting contactors may be used to operate lighting in open or large bay areas. Rooms with multiple entrances shall have multi-way switches.

9.4.6.3 Dedicated Service

Contractor shall provide and install a dedicated 3-phase service for X-Ray machine in X-Ray Room of the Clinic. Service shall include a 3-pole, 40 ampere circuit breaker at 440V, 50 Hz, with a safety disconnect switch provided in the X-Ray Room. Final location of disconnect switch shall be coordinated with the Contracting Officer. Wiring shall be installed in conduit.

9.5 CONDUCTORS

All cable and wire conductors shall be copper; except overhead medium voltage conductors may be aluminum. Conductor jacket or insulation shall be color coded to satisfy local utility requirements. Conductors shall be sized in accordance with the this RFP and the listed codes and standards.

For interior wiring, the use of 75 or 90 degree C (minimum) terminals and insulated conductors is required. Use of 75 degree C conductors on circuits with protective device terminals rated for 60 degree C is inappropriate.

9.6 GROUNDING AND BONDING

In general, grounding and bonding shall comply with the requirements of NFPA 70 and NFPA 780. Underground connections shall be exothermal welded. All exposed non-current carrying metallic parts of electrical equipment in the electrical system shall be grounded. Insulated grounding conductor (separate from the electrical system neutral conductor) shall be installed in all feeder and branch circuit raceways. Grounding conductor shall be green-colored, unless the local authority requires a different color-coded conductor. Ground rods shall be copper-clad steel. Ground resistance shall not exceed 25 ohms when measured more than 48 hours after rainfall using the fall of potential method outlined in IEEE 81.

Communications Building: Grounding and Bonding shall meet the requirements of ANSI/TIA/EIA-942, IEEE 81.2 and IEEE 1100, as well as the NEC. Ground resistance shall not exceed 5 ohms when measured more than 48 hours after rainfall using the fall of potential method outlined in IEEE 81. A ground ring shall be installed around the communications building.

Medical Clinic: Grounding and Bonding shall meet the requirements of ANSI/TIA/EIA-942, IEEE 81.2, IEEE 1100, NFPA 99, and UFC 4-510-01, as well as the NEC. Ground resistance shall not exceed 5 ohms when measured more than 48 hours after rainfall using the fall of potential method outlined in IEEE 81.

Power plant: Grounding and Bonding shall meet the requirements of ANSI/TIA/EIA-942, IEEE 81.2 and IEEE 1100, as well as the NEC. Ground resistance shall not exceed 5 ohms when measured more than 48 hours after rainfall using the fall of potential method outlined in IEEE 81. A ground ring shall be installed around the Power Plant.

9.6.1 Lightning Protection

Communications Building, Medical Clinic, Ammo Supply Point, Propane Tanks, Fuel Point and Power Plant including Fuel storage tanks shall have a lightning protection system installed per the NEC and NFPA 780, as well as other applicable standards listed in this document. Medical clinic lightning protection requirements shall also meet the requirements in UFC 4-510-01.

Ammo Supply Point and all fueling areas shall also implement static electricity controls in accordance with standards listed in this document.

9.7 ENCLOSURES

Enclosures for exterior applications shall be NEMA Type 4X (IEC Classification IP56) or better and for dry interior locations NEMA Type 1 (IEC Classification IP10) or better. For wet indoor locations, NEMA type 3S (IEC Classification IP54) or better shall be used.

9.8 FIRE DETECTION & ALARM SYSTEM

Per directions from the Host Nation, no Fire Detection and Alarm System shall be provided in the facilities to be used by the Host Nation’s personnel. However, Fire Alarm System shall be provided, as described below, in the facilities to be used by the U.S. Personnel. In U.S. Barracks Fire Detection and Alarm System shall consist of hard-wired, multi-station smoke detectors, with building wide annunciation. In the U.S. Headquarters Building complete Fire Detection and Alarm System shall be provided, to include, fire alarm control panel, pull (or push button) stations, horns, strobe lights, smoke and/or heat detectors, as required. No Fire Alarm System shall be provided in the Dining/MWR Facility. Fire alarm cable shall be installed in recessed hard wall PVC conduit and plastered over it. In addition to building wide fire alarm annunciation, the system shall also be capable of automatically transmitting the alarm signal via telephone lines to the local Base Fire Department / Fire Station. System design shall be in accordance with the requirements of NFPA 72. Fire alarm system shall be complete and a standard product of one manufacturer. Contractor shall provide hard-wired carbon monoxide (CO_2) detectors, with local in-room annunciation, in all rooms where wood burning or oil-fired heaters will be provided.

9.9 TELEPHONE/COMPUTER NETWORK SYSTEM

Each Corps, Brigade, and Battalion HQ building office, room shall have telephone and computer data outlets. Telephone/data System shall include cross-connect boxes, duplex RJ-45 telephone outlets with a minimum of 4 pair Category 5 Enhanced (CAT 5e) cable terminating at each outlet (jack). The Contracting Officer shall determine outlet locations for individual rooms. Telephone wiring shall be recessed in finished areas and surface mounted in metal conduits in unfinished areas. Two (2) appropriately sized empty conduits (not less than 100 mm) shall be provided from the cross connect box to an outside communication hand-hole 1.5 meter from exterior walls. All empty conduits shall have pull wires and shall be capped and sealed. See Paragraph 10 below for additional requirements for communications systems.

9.10 TELEVISION SYSTEM

Television System shall consist of television outlets and an empty metal conduit raceway system, to include necessary junction boxes and pull wire. The Contracting Officer shall determine outlet locations. Television monitors, coaxial cable any amplification devices shall be provided by others. One 2-inch (50mm) conduit shall be provided from the television junction box to the outside communication hand-hole.

9.11 IDENTIFICATION NAMEPLATES

Major items of electrical equipment, such as the transformers, manholes, hand holes, panel boards and load centers, shall be provided with a permanently installed engraved identification nameplate.

9.12 SCHEDULES

All panel boards and load centers shall be provided with a panel schedule. Schedule shall be typed written in English and Afghan languages.

9.13 SINGLE LINE DIAGRAM

Complete single line diagram shall be provided in every transformer distribution panel and in Main Distribution Panel in each building. Single line diagram shall show all panels serviced from the transformer distribution panel and the MDP respectively.

9.14 MEDICAL CLINIC

All electrical work in the medical clinic shall comply with the health-care-facility specific requirements outlined in UFC 4-510-01 and NFPA 99, in addition to the general requirements of the NEC and other general electrical codes and standards listed above.

The medical clinic shall be provided with an overhead paging system (Public Address System), as outlined in UFC 4-510-01.

Backup power systems shall be installed per the requirements of UFC 4-510-01, NFPA 99, and NEC. Power systems for the medical clinic shall

be designed as a double-ended substation with two or more transformers, fed from two different feeders. Hospital power system shall be a "type 1 EES" system, as defined in NFPA 99, and shall meet the design criteria defined in UFC 4-510-01, chapter 10.

UPS systems for the medical clinic shall be provided as required in UFC 4-510-01.

The terms "double ended" and "double ended substation" are defined in IEEE 602.

Provide power for X-ray equipment in accordance with UFC 4-510-01.

In case of conflict between transformer design criteria between the above named standards, UFC 4-510-01 shall govern; in cases where UFC 4-510-01 can not resolve the conflict, it shall be brought to the attention of the Contracting Officer for resolution.

9.15 Electrically Operated Equipment

Contractor shall design, provide and install circuits for all water treatment, waste water treatment plant equipment, lab equipment, Pumps, HVAC equipment, electric water heater, exhaust fans, and any other equipment requiring power in all infrastructure support facilities as identified in Civil and Architectural section of and make final connections.

10. COMMUNICATIONS SYSTEM

10.1 General

10.1.1. Applicable Specifications

The Publications listed below form a part of this specification to the extent referenced. The publications are referred to in the text by designation only.

United States Department of Agriculture, Rural Utilities Service

RUS Bulletin 1751F-643	(2002) Underground Plant Design
RUS Bulletin 1751F-644	(2002) Underground Plant Construction
RUS Bulletin 1753F-151	(2001) Construction of Underground Plant, Parts II & III
RUS Bulletin 1753F-201	(1997) Acceptance Test and Measurements Of Telecommunications Plant
RUS Bulletin 1753F-208	(1993) Specifications for Filled Telephone Cables with Expanded Insulation (PE-89)
RUS Bulletin 1753F-401	(1995) Standards for Splicing Copper And Fiber Optic Cable (PC-2)
RUS Bulletin 1753F-601	(1994) Specifications for Filled

	Fiber Optic Cables (PE-90)
RUS Bulletin 1753E-001	(1996) RUS General Specification for Digital, Stored Program Controlled, Central Office Equipment, RUS Form 522.
RUS Publication IP 344-2	(2006) List of Materials Acceptable For Use on Telecommunications Systems Of RUS Borrowers.
RUS Bulletin 345-65	(1978) Shield Bonding Connectors (PE-33)
RUS Bulletin 345-83	(1982) REA Specification for Gas Tube Surge Arrestors (PE-80)

American National Standards Institute/Telecommunications Industry Association/Electronics Industry Association

ANSI TIA/EIA 606-A	(2002) Administration Standard for The Telecommunications Infrastructure
ANSI TIA/EIA 607-A	(2002) Commercial Building Grounding (Earthing) and Bonding Requirements for Telecommunications

10.1.2 Communication Systems Design

The outside plant communications system for Paktika is to be designed, supplied and constructed by the Contractor. The design and construction of the systems shall be in accordance with the references and the requirements contained herein. The design and selection of materials and equipment shall be submitted to TAC through the Contracting Officer for approval. The inside plant (building communications cabling) shall use the existing design provided by the Government.

10.2 Exterior Communication Manhole System

The contractor shall install a manhole/handhole and duct system. The manholes and hand-holes shall be constructed in accordance with the contract drawings. The maximum distance between manholes and/or hand-holes shall be 150 m. The ducts shall be direct buried with a minimum of 1000 mm of properly tamped dirt/backfill on the top. Hand-holes shall be installed in laterals in between manholes and buildings and only where the distance between the main duct system and the building is 100 meters or more. The maximum number of ducts in a hand-hole wall shall be two, with one having four (4) inner ducts installed.

10.3 Exterior Conduit

The underground conduit for the manhole and duct system shall be direct buried (1 meter below surface), 114 mm DB type PVC or schedule 40, PVC. Innerducts shall be four(4) 25mm PVC or PE innerducts field installed in the outer-duct. The inner ducts shall be installed in the duct face and secured with properly sized duct plugs which expand to seal the

duct. The ducts will be reinforced concrete encased where a road or taxi way is crossed. The duct will be listed on the RUS list of materials acceptable for use on RUS projects. Cable racking diagrams (manhole/hand-hole butterflies) shall be provided for the manholes and hand-holes. The minimum duct configuration in the main duct system shall be a six way duct, being three conduits wide by two conduits deep (3 X 2) with two of the conduits having inner-ducts installed. Laterals off of the main duct system manhole to manhole shall be a minimum of a 4 way (2x2) with one duct having innerducts. The duct system from the manhole/handhole to a building with cable installed shall be a 1x 2, 110 mm PVC duct bank with one duct having innerducts. The duct system from a manhole/handhole to a building with allocations only shall be two (2), four inch (114mm) DB type PVC conduits stubbed out 3 meters from the manhole/handhole.

10.4 Exterior Telephone Cable

The Contractor shall install copper and fiber optic cable in accordance with the references and the cable requirements listed below. The copper cable shall be 24 AWG, RUS PE89 type, foam skin polyolefin, with an outer layer of solid colored polyolefin and a copolymer coated 8 mil aluminum tape shield. The fiber optic cable shall be a single mode, RUS PE90 type, with a 6 mil, copolymer coated steel shield. The fiber shall not have any internal splices and have a maximum loss of .4dB/Km at 1310nm and .3dB/Km at 1550nm. The copper and fiber optic cable shall be installed, grounded/bonded, spliced and tested in accordance with RUS standards.

10.5 Splices

10.5.1 Copper splices. 25 pair modules shall be used on copper splices 25 pairs or greater and discrete connectors shall be used on lesser count cable splices. The copper splice closures shall be flash tested with nitrogen in accordance with the manufacturer’s recommendations before encapsulation. The encapsulant shall fill all of the splice interstices. The copper splicing connectors, bonding hardware, splice closures and encapsulant shall be on the RUS list of material acceptable for use on RUS projects, IP 344-2. Bonding and grounding shall be in accordance with the RUS standards. The copper splice closure shall be installed by the copper splicer only. The copper cable splicer (s) shall have 7 years documented unsupervised experience in the installation of the splice closure being used.

10.5.2 Fiber Optic splices. The fiber optic splice closure shall be equipped with splice trays that properly hold the fusion splice protectors (stainless steel rod with heat shrink tube). The splice loss shall be .02dB or less as measured by the fusion splicing machine and .2dB as measured by an OTDR. The fiber optic splice closure shall be flash tested with nitrogen in accordance with the manufacturer’s recommendations and also be listed in RUS IP 344-2. All bonding hardware shall also be listed in RUS IP 344-2. Bonding and grounding shall be in accordance with the RUS standards. The fiber optic splice closure shall be installed by the fiber optic splicer only. The fiber optic cable splicer (s) shall have 7 years documented unsupervised experience in the installation of the splice closure being used.

10.6 Protector blocks on the Main Distribution Frame (MDF).
The contractor shall install 100 pair copper protector units with cable stubs on the MDF. The protectors shall be equipped with heavy duty gas tube protector units and both the connectors and gas tubes shall be on the RUS list IP 344-2. The Switch side of the protector units shall be equipped for wire wrap terminations. The protector stubs (TIP Cables) shall be spliced to the incoming outside plant cables. The tip cable splice closures shall be mounted on formed metal channel (Kindorf,Unistrut,BeeLine etc.) frame work in the cable vault on galvanized cable racks (the same as installed in the manholes and hand-holes) and cable rack hooks. The distance between the cable racks shall be no more than 30 inches, meaning that the vertical members on the formed metal channel structure will be no more than 30 inches apart. Rust Resistant hardware (galvanized) shall be used on the formed metal channel framework. The copper splice closures shall be flame retardant and listed on RUS Bulletin 344-2. Bonding and grounding of the MDF and the cable vault shall be in accordance with the referenced RUS standards. Each incoming cable pair will be protected on the MDF.

10.7 Fiber optic patch panels. The fiber optic patch panels used for the Fiber MDF shall be relay rack mounted combination units that provide for patching and splicing. The combination unit shall have fusion splice trays and be equipped to use pre-connectorized panels. Each panel shall be equipped with six duplex SC connectors with zirconia ceramic sleeves per panel. The combination unit enclosure shall be able to properly store one meter of de-sheathed fiber optic cable. The combination units shall be mounted on the relay racks at the end of the copper main distribution frame. The fiber optic terminations shall consist of the outside plant cable being fusion spliced to single mode pigtails with factory installed SC connectors. The fusion splice shall have a splice loss of .02dB or better as measured by the splicing machine and .2dB as measured by an OTDR. The pigtails shall have a single mode insertion loss of less than .35dB with the typical being 15dB and a single mode return loss of better than -55dB. The fusion splices shall be protected by a stainless steel rod and heat shrink tube and placed in a splice tray. The combination unit enclosure shall be capable of mounting 15 panels. Blank adapter plates shall be used fill up all unused spaces on the combination unit. One duplex, single mode patch cord SC-SC shall be provided for each patch panel port. The fiber patch cords shall have a mated pair insertion loss of less than .35dB with a typical loss of .15dB and a typical mated return loss of less than -55dB.

10.8 Outside plant cable. The outside plant cable (cable size and cable counts) shall be engineered and installed in accordance with the referenced standards. The OSP cable engineering shall be approved at TAC before any cable is ordered.

10.8.1 Spare cable pairs and fiber optic strands. There shall be spare cable pairs and fiber strands in the manholes/hand holes as required ensuring that standard sized cables are used. Dead Cable pairs shall be spliced through and cleared and capped in proper connectors. The 25 pair binder grouping of the cable shall be maintained. When the smaller (6 pair or 12 pair) counts are used, the first 6 pair count or first two 6 pair counts are used, the 13th pair of the count is cleared and capped, and then the second pair counts 14th through 25 pair count

will be used. Under no circumstances will a split binder count be used. The 6 strand grouping of the fiber optic cable plant shall also be maintained.

10.9 The following buildings will either have the cables installed and terminated in the building OR have the cable allocated in the cable count and left in the manhole/handhole cable splice closures.

10.9.1 DPW building, 50 pairs copper, 6 strands single mode fiber optic cable. Copper and fiber shall be installed in the building, terminated and tested.

10.9.2 Detention Facility, 25 pairs copper, 12 strands single mode fiber optic cable.

10.10 Embedded Training Facility

10.10.1 Embedded Training, MWR building, 50 pairs copper, 12 strands single mode fiber optic cable. Copper and fiber shall be installed in the building, terminated and tested.

10.10.2 Embedded Training Barracks building, 6 pairs copper, cable count allocated in the outside plant and accessible in the nearest manhole. No requirement for fiber optic cable.

10.10.3 Embedded Training Storage building, 6 pairs copper, cable count allocated in the outside plant and accessible in the nearest manhole. No requirement for fiber optic cable.

10.10.4 Embedded Training Laundry building, 6 pairs copper, cable count allocated in the outside plant and accessible in the nearest manhole. No requirement for fiber optic cable.

10.10.5 Embedded Training DFAC building, 12 pairs copper, 6 strands single mode fiber optic cable. Copper and fiber shall be installed in the building, terminated and tested.

NOTE: In the Embedded Training Facility area there shall be 12 strands of single mode cable allocated in the fiber optic cable distribution plant dedicated for use by embedded area buildings that don’t have fiber installed.
These fiber strands shall be contained in the fiber count in cable and available in the splice closures in the area manholes.

10.11 Interpreter Facilities

10.11.1 Interpreter Barracks, building, 12 pairs copper, cable count allocated in the outside plant and accessible in the nearest manhole. No requirement for fiber optic cable.

10.11.2 Interpreter MWR building, 100 pairs copper, 12 strands single mode fiber optic cable. Copper and fiber shall be installed in the building, terminated and tested.

10.11.3 Interpreter DFAC building, 12 pairs copper, 6 strands single mode fiber optic cable. Copper and fiber shall be installed in the building, terminated and tested.

NOTE: In the Interpreter Facility area there shall be 12 strands of single mode cable allocated in the fiber optic cable distribution plant dedicated for use by the interpreter facility area buildings that don't have fiber installed.

10.12 Fire Station, 25 pairs copper, 12 strands single mode fiber optic cable. Copper and fiber shall be installed in the building, terminated and tested.

10.13 Range

10.13.1 Range Observation Tower 6 pairs copper. Copper shall be installed in the tower, terminated and tested. No requirement for fiber optic cable.

10.13.2 Range Ammunition Breakdown Building, 12 pairs copper, cable count allocated in the outside plant and accessible in the nearest manhole. No requirement for fiber optic cable.

10.13.3 Range Covered bleachers, 6 pairs copper cable count allocated in the outside plant and accessible in the nearest manhole. No requirement for fiber optic cable.

10.14 MWR building, 100 pairs copper, 12 strands single mode fiber optic cable. Copper and fiber shall be installed in the building, terminated and tested.

10.15 Field Housing facility 6 pair copper count allocated in the outside plant and accessible in the nearest manhole. No requirement for fiber optic cable.

10.16 Transportation, 12 pair copper count allocated in the outside plant and accessible in the nearest manhole. No requirement for fiber optic cable.

10.17 Stone/fence/gates, 6 pair copper count allocated in the outside plant and accessible in the nearest manhole. No requirement for fiber optic cable.

10.18 Guard tower, 25 pair cable dedicated for towers, looping around tied down to all guard towers. Copper shall be installed in the tower PETs, terminated and tested.

10.19 Reception building, 12 pairs copper, 6 strands single mode fiber optic cable. Copper and fiber shall be installed in the building, terminated and tested.

10.20 DFAC, 12 pairs copper, 6 strands single mode fiber optic cable. Copper and fiber shall be installed in the building, terminated and tested.

10.21 Power Plant, 12 pairs copper, 12 strands single mode fiber optic cable. Copper and fiber shall be installed in the building, terminated and tested.

10.22 Brigade and Garrison HQ Complex,

10.22.1 Brigade Barracks; Type A, 6 pair copper count allocated in the outside plant and accessible in the nearest manhole. No requirement for fiber optic cable.

10.22.2 Brigade Barracks, Type D, 6 pair copper count allocated in the outside plant and accessible in the nearest manhole. No requirement for fiber optic cable.

10.22.3 Brigade Senior NCO Building, 6 pair copper count allocated in the outside plant and accessible in the nearest manhole. No requirement for fiber optic cable.

10.22.4 Brigade Toilet/Shower building, 6 pair copper count allocated in the outside plant and accessible in the nearest manhole. No requirement for fiber optic cable.

10.22.5 Brigade Headquarters, 50 pairs copper, 6 strands single mode fiber optic cable. Copper and fiber shall be installed in the building, terminated and tested.

10.22.6 Brigade/Garrison HQ building. 50 pairs copper, 6 strands single mode fiber optic cable. Copper and fiber shall be installed in the building, terminated and tested.

10.22.7 Brigade/Garrison Arms Storage building. 6 pair copper count allocated in the outside plant and accessible in the nearest manhole. No requirement for fiber optic cable.

10.22.8 Brigade/Garrison Motor pool, 12 pair copper count allocated in the outside plant and accessible in the nearest manhole. No requirement for fiber optic cable.

10.22.9 Brigade/Garrison POL Storage building. 6 pair copper count allocated in the outside plant and accessible in the nearest manhole. No requirement for fiber optic cable.

10.22.10 Brigade/Garrison Motor Pool. 12 pair copper count allocated in the outside plant and accessible in the nearest manhole. No requirement for fiber optic cable.

10.22.11 Brigade/Garrison Maintenance Garage. 12 pair copper count and 6 strands single mode fiber optic cable count allocated in the outside plant and accessible in the nearest manhole.

10.22.12 Brigade/Garrison Refueling Point. 12 pair copper count allocated in the outside plant and accessible in the nearest manhole. No requirement for fiber optic cable.

NOTE: In the Brigade & Garrison HQ Complex area there shall be 12 strands of single mode cable allocated in the fiber optic cable distribution plant dedicated for use by the Brigade & Garrison area buildings that don’t have fiber installed.

10.23 Bachelor Officer Quarters. 50 pairs copper, 6 strands single mode fiber optic cable. Copper and fiber shall be installed in the building, terminated and tested.

10.24 Infantry Battalion Complex

10.24.1 Infantry Battalion Barracks, Type A, 6 pair copper count allocated in the outside plant and accessible in the nearest manhole. No requirement for fiber optic cable.

10.24.2 Infantry Battalion Barracks, Type B, 6 pair copper count allocated in the outside plant and accessible in the nearest manhole. No requirement for fiber optic cable.

10.24.3 Infantry Battalion Toilet/Shower building, 6 pair copper count allocated in the outside plant and accessible in the nearest manhole. No requirement for fiber optic cable.

10.24.4 Infantry Battalion Headquarters Building, 50 pairs copper, 6 strands single mode fiber optic cable. Copper and fiber shall be installed in the building, terminated and tested.

10.24.5 Infantry Battalion Arms storage building. 6 pair copper count allocated in the outside plant and accessible in the nearest manhole. No requirement for fiber optic cable.

10.24.6 Infantry Battalion Storage building. 6 pair copper count allocated in the outside plant and accessible in the nearest manhole. No requirement for fiber optic cable.

10.24.7 Infantry Battalion Motor pool. 12 pair copper count allocated in the outside plant and accessible in the nearest manhole. No requirement for fiber optic cable.

10.24.8 Infantry Battalion POL Storage building. 12 pair copper count allocated in the outside plant and accessible in the nearest manhole. No requirement for fiber optic cable.

NOTE: In the Infantry Battalion Complex area there shall be 12 strands of single mode cable allocated in the fiber optic cable distribution plant dedicated for use by the Infantry Battalion facility area buildings that don’t have fiber installed.

10.25 Combat Support Battalion Complex

10.25.1 Combat Support Battalion Barracks, Type A, 6 pair copper count allocated in the outside plant and accessible in the nearest manhole. No requirement for fiber optic cable.

10.25.2 Combat Support Battalion Barracks, Type B, 6 pair copper count allocated in the outside plant and accessible in the nearest manhole. No requirement for fiber optic cable.

10.25.3 Combat Support Battalion Barracks, Type C, 6 pair copper count allocated in the outside plant and accessible in the nearest manhole. No requirement for fiber optic cable.

10.25.4 Combat Support Battalion Barracks, Type D, 6 pair copper count allocated in the outside plant and accessible in the nearest manhole. No requirement for fiber optic cable.

10.25.5 Combat Support Battalion Toilet/Shower building, 6 pair copper count allocated in the outside plant and accessible in the nearest manhole. No requirement for fiber optic cable.

10.25.6 Combat Support Battalion Headquarters Building, 50 pairs copper, 6 strands single mode fiber optic cable. Copper and fiber shall be installed in the building, terminated and tested.

10.25.7 Combat Support Battalion Storage building. 6 pair copper count allocated in the outside plant and accessible in the nearest manhole. No requirement for fiber optic cable.

10.25.8 Combat Support Battalion Motor pool. 12 pair copper count allocated in the outside plant and accessible in the nearest manhole. No requirement for fiber optic cable.

10.25.9 Combat Support Battalion POL Storage building. 6 pair copper count allocated in the outside plant and accessible in the nearest manhole. No requirement for fiber optic cable.

10.25.10 Combat Support Battalion Arms storage building. 6 pair copper count allocated in the outside plant and accessible in the nearest manhole. No requirement for fiber optic cable.

10.25.11 Combat Support Maintenance Garage. 12 pair copper count and 6 strands single mode fiber optic cable allocated in the outside plant and accessible in the nearest manhole.

NOTE: In the Combat Support Battalion Complex area there shall be 12 strands of single mode cable allocated in the fiber optic cable distribution plant dedicated for use by the Combat Support Battalion area buildings that don’t have fiber installed.

10.26 Combat Support Battalion (2)

10.26.1 Combat Support Battalion (2) Barracks, Type A, 6 pair copper count allocated in the outside plant and accessible in the nearest manhole. No requirement for fiber optic cable.

10.26.2 Combat Support Battalion (2) Barracks, Type B 6 pair copper count allocated in the outside plant and accessible in the nearest manhole. No requirement for fiber optic cable.

10.26.3 Combat Support Battalion (2) Barracks, Type D6 pair copper count allocated in the outside plant and accessible in the nearest manhole. No requirement for fiber optic cable.

10.26.4 Combat Support Battalion (2) Toilet/Shower building, 6 pair copper count allocated in the outside plant and accessible in the nearest manhole. No requirement for fiber optic cable.

10.26.5 Combat Support Battalion (2) Headquarters Building, 50 pairs copper, 6 strands single mode fiber optic cable. Copper and fiber shall be installed in the building, terminated and tested.

10.26.6 Combat Support Battalion (2) Storage building. 6 pair copper count allocated in the outside plant and accessible in the nearest manhole. No requirements for fiber optic cable.

10.26.7 Combat Support Battalion (2) Motor pool. 12 pair copper count and 6 strand single mode fiber optic count allocated in the outside plant and accessible in the nearest manhole.

10.26.8 Combat Support Battalion (2) POL Storage building. 6 pair copper count allocated in the outside plant and accessible in the nearest manhole. No requirements for fiber optic cable.

10.26.9 Combat Support Battalion (2) Arms storage building, 6 pair copper count allocated in the outside plant and accessible in the nearest manhole. No requirements for fiber optic cable.

10.26.10 Combat Support (2) Maintenance Garage. 12 pair copper count and 6 strand single mode fiber optic count allocated in the outside plant and accessible in the nearest manhole.

NOTE: In the Combat Support Battalion Complex (2) area there shall be 12 strands of single mode cable allocated in the fiber optic cable distribution plant dedicated for use by the Combat Support Battalion (2) area buildings that don’t have fiber installed.

10.27 Central Maintenance

10.27.1 Central Maintenance Garage, 12 pair copper count and 6 strand single mode fiber optic count allocated in the outside plant and accessible in the nearest manhole.

10.27.2 Central Maintenance Motor Pool, 12 pair copper count and 6 strand single mode fiber optic count allocated in the outside plant and accessible in the nearest manhole.

10.27.3 Central Maintenance POL Storage building. 12 pair copper count allocated in the outside plant and accessible in the nearest manhole. No requirement for fiber optic cable.

10.27.4 Central Receiving Warehouse, 12 pair copper and 6 strand single mode fiber optic count allocated in the outside plant and accessible in the nearest manhole.

10.28 Communications Building. All copper and fiber cables originate from this building.

10.29 Training Building, 12 pair copper count and 6 strand single mode fiber optic count allocated in the outside plant and accessible in the nearest manhole.

10.30 Arms Storage building, 6 pairs copper cable count allocated in the outside plant and accessible in the nearest manhole. No requirement for fiber optic cable.

10.31 Ammunition Supply point

10.31.1 Ammunition Supply point 6 pair copper count allocated in the outside plant and accessible in the nearest manhole. No requirement for fiber optic cable.

10.31.2 Ammunition Supply point perimeter fence, No copper or fiber optic cable required.

10.31.3 Ammunition Supply Guard house, 6 pairs copper out of the 25 pair guard tower cable.

10.31.4 Ammunition Supply Guard towers, 25 pair cable dedicated for towers, looping around tied down to all guard towers. This 25 pair is not the 25 pair for the other towers.

10.32 Helipad, 6 pairs copper, cable count allocated in the outside plant and accessible in the nearest manhole. No requirement for fiber optic cable.

10.33 Community center, 100 pairs copper cable, 6 strands single mode fiber optic cable.

10.34 Medical Clinic, 100 pairs copper cable, 12 strands single mode fiber optic cable.

-- End of Section --

SECTION 02220

DEMOLITION

PART 1 GENERAL

1.1 GENERAL REQUIREMENTS

Do not begin demolition until authorization is received from the Contracting Officer. Remove rubbish and debris from the project site; do not allow accumulations inside or outside the site. The work includes demolition, and removal of resulting rubbish and debris. Rubbish and debris shall be removed from Government property daily, unless otherwise directed, to avoid accumulation at the demolition site. Materials that cannot be removed daily shall be stored in areas specified by the Contracting Officer.

1.2 DUST AND DEBRIS CONTROL

Prevent the spread of dust and debris to occupied portions of the site and avoid the creation of a nuisance or hazard in the surrounding area. Do not use water if it results in hazardous or objectionable conditions such as, but not limited to, ice, flooding, or pollution.

1.3 PROTECTION

1.3.1 Traffic Control Signs

Where pedestrian and driver safety is endangered in the area of removal work, use traffic barricades with flashing lights. Notify the Contracting Officer prior to beginning such work.

1.3.2 Existing Work

Before beginning any demolition work, the Contractor shall survey the site and examine the drawings and specifications to determine the extent of the work. The Contractor shall take necessary precautions to avoid damage to existing items to remain in place, to be reused, or to remain the property of the Government; any damaged items shall be repaired or replaced as approved by the Contracting Officer. The Contractor shall coordinate the work of this section with all other work and shall construct and maintain shoring, bracing, and supports as required. The Contractor shall ensure that structural elements are not overloaded and shall be responsible for increasing structural supports or adding new supports as may be required as a result of any cutting, removal, or demolition work performed under this contract. Do not overload pavements to remain. Provide new supports and reinforcement for existing construction weakened by demolition or removal work. Repairs, reinforcement, or structural replacement must have Contracting Officer approval.

1.3.3 Facilities

Protect electrical and mechanical services and utilities. Where removal of existing utilities and pavement is specified or indicated, provide approved barricades, temporary covering of exposed areas, and temporary services or connections for electrical and mechanical utilities. Floors, roofs, walls, columns, pilasters, and other structural components that are designed and

constructed to stand without lateral support or shoring, and are determined to be in stable condition, shall remain standing without additional bracing, shoring, of lateral support until demolished, unless directed otherwise by the Contracting Officer. The Contractor shall ensure that no elements determined to be unstable are left unsupported and shall be responsible for placing and securing bracing, shoring, or lateral supports as may be required as a result of any cutting, removal, or demolition work performed under this contract.

1.3.4 Protection of Personnel

During the demolition work the Contractor shall continuously evaluate the condition of the structure being demolished and take immediate action to protect all personnel working in and around the demolition site. No area, section, or component of floors, roofs, walls, columns, pilasters, or other structural element will be allowed to be left standing without sufficient bracing, shoring, or lateral support to prevent collapse or failure while workmen remove debris or perform other work in the immediate area.

1.4 USE OF EXPLOSIVES

Use of explosives will not be permitted.

PART 2 PRODUCTS

Not Applicable.

PART 3 EXECUTION

3.1 EXISTING FACILITIES TO BE REMOVED

3.1.1 Structures

Existing structures indicated shall be removed to below grade. Interior walls, other than retaining walls and partitions, shall be removed to grade or to top of concrete slab on ground. Basement slabs shall be broken up to permit drainage. Sidewalks, curbs, gutters and street light bases shall be removed as indicated.

3.1.2 Utilities and Related Equipment

Remove existing utilities, as indicated on drawings and as uncovered by work and terminate in a manner conforming to the nationally recognized code covering the specific utility and approved by the Contracting Officer. When utility lines are encountered that are not indicated on the drawings, the Contracting Officer shall be notified prior to further work in that area. Remove meters and related equipment and deliver to a location in accordance with instructions of the Contracting Officer. If utility lines are encountered that are not shown on drawings, contact the Contracting Officer for further instructions.

3.1.3 Paving and Slabs

Remove concrete and asphaltic concrete paving and slabs including aggregate base as indicated to a depth below new finish grade. Provide neat sawcuts at limits of pavement removal as indicated.

3.2 FILLING

Holes, open basements and other hazardous openings shall be filled in accordance with Section 02315.

3.3 DISPOSITION OF MATERIAL

3.3.1 Unsalvageable Material

Concrete, masonry, and other noncombustible material, except concrete permitted to remain in place, shall be disposed of in the disposal area located as designated by Contracting Officer. The fill in the disposal area shall remain below grade elevation and after disposal is completed, the disposal area shall be uniformly graded to drain.

3.4 CLEANUP

Debris and rubbish shall be removed from basement and similar excavations. Debris shall be removed and transported in a manner that prevents spillage on streets or adjacent areas. Local regulations regarding hauling and disposal shall apply.

3.4.1 Debris and Rubbish

Debris and rubbish shall be removed from basement and similar excavations. Debris shall be removed and transported in a manner that prevents spillage on streets or adjacent areas. Local regulations regarding hauling and disposal shall apply.

-- End of Section --

SECTION 02231

CLEARING AND GRUBBING

PART 1 GENERAL

Not Applicable

PART 2 PRODUCTS

Not Applicable

PART 3 EXECUTION

3.1 PROTECTION

3.1.1 Roads and Walks

Keep roads and walks free of dirt and debris at all times.

3.1.2 Trees, Shrubs, and Existing Facilities

Trees and vegetation to be left standing shall be protected from damage incident to clearing, grubbing, and construction operations by the erection of barriers or by such other means as the circumstances require.

3.1.3 Utility Lines

Protect existing utility lines that are indicated to remain from damage. Notify the Contracting Officer immediately of damage to or an encounter with an unknown existing utility line. The Contractor shall be responsible for the repairs of damage to existing utility lines that are indicated or made known to the Contractor prior to start of clearing and grubbing operations. When utility lines which are to be removed are encountered within the area of operations, the Contractor shall notify the Contracting Officer in ample time to minimize interruption of the service.

3.2 CLEARING

Clearing shall consist of the felling, trimming, and cutting of trees into sections and the satisfactory disposal of the trees and other vegetation designated for removal, including downed timber, snags, brush, and rubbish occurring within the areas to be cleared. Clearing shall also include the removal and disposal of structures that obtrude, encroach upon, or otherwise obstruct the work. Trees, stumps, roots, brush, and other vegetation in areas to be cleared shall be cut off flush with or below the original ground surface, except such trees and vegetation as may be indicated or directed to be left standing.

3.3 TREE REMOVAL

Where indicated or directed, trees and stumps that are designated as trees shall be removed from areas outside those areas designated for clearing and grubbing. This work shall include the felling of such trees and the removal of their stumps and roots as specified in paragraph GRUBBING. Trees shall be disposed of as specified in paragraph DISPOSAL OF MATERIALS.

3.4 GRUBBING

Grubbing shall consist of the removal and disposal of stumps, roots larger than 75 mm in diameter, and matted roots from the designated grubbing areas. Material to be grubbed, together with logs and other organic or metallic debris not suitable for foundation purposes, shall be removed to a depth of not less than 455 mm below the original surface level of the ground in areas indicated to be grubbed and in areas indicated as construction areas under this contract, such as areas for buildings, and areas to be paved. Depressions made by grubbing shall be filled with suitable material and compacted to make the surface conform with the original adjacent surface of the ground.

3.5 DISPOSAL OF MATERIALS

3.5.1 Nonsaleable Materials

Logs, stumps, roots, brush, rotten wood, and other refuse from the clearing and grubbing operations, shall be disposed of in the designated waste disposal area.

-- End of Section --

SECTION 02300

EARTHWORK

PART 1 GENERAL

1.1 REFERENCES

The publications listed below form a part of this specification to the extent referenced. The publications are referred to in the text by basic designation only.

ASTM INTERNATIONAL (ASTM)

ASTM C 136	(1996a) Sieve Analysis of Fine and Coarse Aggregates
ASTM D 422	(1963; R 1998) Particle-Size Analysis of Soils
ASTM C 33	(2003) Concrete Aggregates
ASTM D 1140	(1997) Amount of Material in Soils Finer than the No. 200 (75-micrometer) Sieve
ASTM D 1556	(2000) Density and Unit Weight of Soil in Place by the Sand-Cone Method
ASTM D 1557	(1998) Laboratory Compaction Characteristics of Soil Using Modified Effort (56,000 ft-lbf/cu. ft. (2,700 kN-m/cu.m.))
ASTM D 2216	(1998) Laboratory Determination of Water (Moisture) Content of Soil and Rock by Mass
ASTM D 2487	(2000) Classification of Soils for Engineering Purposes (Unified Soil Classification System)
ASTM D 3017	(1988; R 1996e1) Water Content of Soil and Rock in Place by Nuclear Methods (Shallow Depth)
ASTM D 4318	(2000) Liquid Limit, Plastic Limit, and Plasticity Index of Soils

1.2 DEFINITIONS

1.2.1 Satisfactory Materials

Satisfactory materials shall comprise any materials classified by ASTM D 2487 as SM, SW-SM, SC, SW-SC, or as listed below. Satisfactory materials for grading shall be comprised of stones less than 200 mm , except for fill material for pavements which shall be comprised of stones

less than 75 mm in any dimension.

1.2.1.1 Soil Classifications for Satisfactory Materials per ASTM D 2487

A. GW: Well graded gravel with or without sand
B. GP: Poorly graded gravel with or without sand
C. GM: Silty gravel with or without sand
D. GP-GM: Poorly graded gravel with or without silt and sand
E. GW-GM: Well graded gravel with or without silt and sand
F. GC: Clayey gravel with or without sand
G. GP-GC: Poorly graded gravel with or without clay and sand (or silty clay and sand)
H. GM-GC: Silty, clayey gravel with or without sand
I. SW: Well graded sand with or without gravel
J. SM: Silty sand with or without gravel
K. SW-SM: Well graded sand with or without silt and gravel
L. SC: Clayey sand with or without gravel
M. SW-SC: Well graded sand with or without clay and gravel (or silty clay and gravel)

1.2.2 Unsatisfactory Materials

Materials which do not comply with the requirements for satisfactory materials are unsatisfactory. Unsatisfactory materials also include man-made fills; trash; refuse; backfills from previous construction; and material classified as satisfactory which contains root and other organic matter or frozen material. The Government shall be notified of any contaminated materials.

1.2.3 Cohesionless and Cohesive Materials

Cohesionless materials include materials classified in ASTM D 2487 as GW, GP, SW, and SP, or as listed below. Cohesive materials include materials classified as GC, SC, ML, CL, MH, and CH, or as listed below. Materials classified as GM and SM will be identified as cohesionless only when the fines are nonplastic. Testing required for classifying materials shall be in accordance with ASTM D 4318, ASTM C 136, ASTM D 422, and ASTM D 1140.

1.2.3.1 Cohesionless and Cohesive Materials per ASTM D 2487

Cohesionless Materials:

GW: Well graded gravel with or without sand
GP: Poorly graded gravel with or without sand
SW: Well graded sand with or without gravel
SP: Poorly graded sand with or without gravel

Cohesive Materials:

GC: Clayey gravel with or without sand
SC: Clayey sand with or without gravel
ML: Silt with or without sand or gravel, or sandy silt with or without gravel, or gravelly silt with or without sand
CL: Lean clay with or without sand or gravel, or sandy lean clay with or without gravel, or gravelly lean clay with or without sand
MH: Elastic silt with or without sand or gravel, or sandy elastic silt with or without gravel, or gravelly elastic silt with or without sand
CH: Fat clay with or without sand or gravel, or sandy fat clay with or without gravel, or gravelly fat clay with or without sand

Other Types:

GM: Silty gravel with sand will be identified as cohesionless only when the fines are nonplastic.
SM: Silty sand with gravel will be identified as cohesionless only when the fines are nonplastic.

1.2.4 Degree of Compaction

Degree of compaction required is expressed as a percentage of the maximum density obtained by the test procedure presented in ASTM D 1557. Required moisture range is plus or minus 2 percent of optimum moisture content.

1.2.5 Expansive Soils

Expansive soils are defined as soils classified as CH, MH, ML, and CL that have liquid limits equal to or greater than 45 and plasticity indices equal to or greater than 25 when tested in accordance with ASTM D 4318.

1.2.6 Gypsiferous Soils

Gypsiferous soils are those found to contain 15% or more gypsum as determined by visual inspection. If there is a disargeement with the classification by visual inspection, the following test shall apply. A 1000 gram sample shall be heated to 110 degrees C for 24 hours. At this point the sample will be broken apart. The gypsum can be identified by its white color. The gypsum content can be determined by weight from a chemical analysis, if necessary, to establish exact quantities. All testing will be done at the expense of the Contractor.

1.2.7 Rock

Rock includes all natural solid mineral materials occurring in masses or fragments not classified as soil according to ASTM D 3017.

1.2.8 Topsoil

Topsoil shall be the uppermost part or layer of the soil normally moved in tillage or cultivation. Topsoil shall be considered to be the topmost mineral soil horizon containing an admixture of humified organic matter. Topsoil is located at or near the surface and characterized as the zone of maximum leaching or eluviation.

1.3 SUBMITTALS

Items with a "G" designation require Government approval; items not having a "G" designation are for information only. The following is submitted in accordance with Section 01335 SUBMITTAL PROCEDURES FOR DESIGN/BUILD PROJECT. It is included in the Design Analysis for this project.

SD-03 Product Data

Earthwork; G.

Proposed source of borrow material.

Notification of encountering rock in the project. Advance notice on the opening of excavation or borrow areas.

SD-06 Test Reports

Testing

Borrow Site Testing

Within 24 hours of conclusion of physical tests, thre (3) copies of test results, including calibration curves and results of calibration tests. Results of testing at the borrow site.

SD-07 Certificates

Testing

Qualifications of the Corps validated commercial testing laboratory or the Contractor's validated testing facilities.

1.4 CLASSIFICATION OF EXCAVATION

No consideration will be given to the nature of the materials, and all excavation will be designated as unclassified excavation.

1.5 BLASTING

Blasting will not be permitted.

1.6 UTILIZATION OF EXCAVATED MATERIALS

Unsatisfactory materials removed from excavations shall be disposed of in designated waste disposal or spoil areas. Satisfactory material removed from excavations shall be used, insofar as practicable, in the construction of fills, embankments, subgrades, shoulders, bedding (as backfill), and for similar purposes. No satisfactory excavated material shall be wasted without specific written authorization. Satisfactory material authorized to be wasted shall be disposed of in designated areas approved for surplus material storage or designated waste areas as directed. Newly designated waste areas on Government-controlled land shall be cleared and grubbed before disposal of waste material thereon. Coarse rock from excavations shall be stockpiled and used for constructing slopes or embankments adjacent to streams, or sides and bottoms of channels and for protecting against erosion. No excavated material shall be disposed of to obstruct the flow of any stream, endanger a partly finished structure, impair the efficiency or appearance of any structure, or be detrimental to the completed work in any way.

PART 2 PRODUCTS

2.1 CAPILLARY WATER BARRIER

Provide capillary water barrier of clean, poorly graded crushed rock, crushed gravel, or uncrushed gravel placed beneath a building slab with a vapor barrier as shown on drawings to cut off the capillary flow of pore water to the area immediately below. Conform to ASTM C 33 for fine aggregate grading with a maximum of 3 percent by weight passing ASTM D 1140, 75 micrometers No. 200 sieve.

PART 3 EXECUTION

3.1 STRIPPING OF TOPSOIL

Topsoil, where encountered, shall be stripped to its full depth within the designated excavations and grading lines and disposited in storage piles for later use. Excess topsoil shall be removed from the site and disposed of.

3.2 GENERAL EXCAVATION

The Contractor shall perform excavation of every type of material encountered within the limits of the project to the lines, grades, and elevations indicated and as specified. Grading shall be in conformity with the typical sections shown and the tolerances specified in paragraph FINISHING. Satisfactory excavated materials shall be transported to and placed in fill or embankment within the limits of the work. Unsatisfactory materials encountered within the limits of the work shall be excavated below grade and replaced with satisfactory materials as directed. Such excavated material and the satisfactory material ordered as replacement shall be included in excavation. Surplus satisfactory excavated material not required for fill or embankment shall be disposed of in areas approved for surplus material storage or designated waste areas. Unsatisfactory excavated material shall be disposed of in designated waste or spoil areas. During construction, excavation and fill shall be performed in a manner and sequence that will provide proper drainage at all times. Material required for fill or embankment in excess of that produced by excavation within the grading limits shall be excavated from the borrow areas indicated or from other approved areas selected by the Contractor as specified.

3.2.1 Ditches, Gutters, and Channel Changes

Excavation of ditches, gutters, and channel changes shall be accomplished by cutting accurately to the cross sections, grades, and elevations shown. Ditches and gutters shall not be excavated below grades shown. Excessive open ditch or gutter excavation shall be backfilled with satisfactory, thoroughly compacted, material or with suitable stone or cobble to grades shown. Material excavated shall be disposed of as shown or as directed, except that in no case shall material be deposited less than 1 meter from the edge of a ditch. The Contractor shall maintain excavations free from detrimental quantities of leaves, brush, sticks, trash, and other debris until final acceptance of the work.

3.2.2 Drainage Structures

Excavations shall be made to the lines, grades, and elevations shown, or as directed. Trenches and foundation pits shall be of sufficient size to permit the placement and removal of forms for the full length and width of structure footings and foundations as shown. Rock or other hard foundation material shall be cleaned of loose debris and cut to a firm, level, stepped, or serrated surface. Loose disintegrated rock and thin strata shall be removed. When concrete or masonry is to be placed in an excavated area, the bottom of the excavation shall not be disturbed. Excavation to the final grade level shall not be made until just before the concrete or masonry is to be placed.

3.2.3 Drainage

Provide for the collection and disposal of surface and subsurface water encountered during construction. Completely drain construction site during periods of construction to keep soil materials sufficiently dry. Construct storm drainage features (ponds/basins) at the earliest stages of site development, and throughout construction grade the construction area to provide positive surface water runoff away from the construction activity or provide temporary ditches, swales, and other drainage features and equipment as required to maintain dry soils. When unsuitable working platforms for equipment operation and unsuitable soil support for subsequent construction features develop, remove unsuitable material and provide new soil material as specified herein. It is the responsibility of the Contractor to assess the soil and ground water conditions presented by the plans and specifications and to employ necessary measures to permit construction to proceed.

3.2.4 Jacking, Boring, and Tunneling

Unless otherwise indicated, provide excavation by open cut except that sections of a trench may be jacked, bored, or tunneled if, in the opinion of the Contracting Officer, the pipe, cable, or duct can be safely and properly installed and backfill can be properly compacted in such sections.

3.3 SELECTION OF BORROW MATERIAL

Borrow material shall be selected to meet the requirements and conditions of the particular fill or embankment for which it is to be used. Borrow material shall be obtained from the borrow areas within the limits of the project site, selected by the Contractor. Unless otherwise provided in the contract, the Contractor shall obtain from the Government the right to procure material, pay royalties and other charges involved, and bear the expense of developing the sources, including rights-of-way for hauling. Borrow material from approved sources on Government-controlled land may be obtained without payment of royalties. Unless specifically provided, no borrow shall be obtained within the limits of the project site without prior written approval. Necessary clearing, grubbing, and satisfactory drainage of borrow pits and the disposal of debris thereon shall be considered related operations to the borrow excavation.

3.4 BACKFILL

Backfill shall be placed in lifts and compacted to at least 95 percent laboratory maximum density for all materials. Ground surface on which backfill is to be placed shall be prepared as specified in paragraph PREPARATION OF GROUND SURFACE FOR EMBANKMENTS. Compaction requirements for backfill materials shall also conform to the applicable portions of paragraphs PREPARATION OF GROUND SURFACE FOR EMBANKMENTS, EMBANKMENTS, and SUBGRADE PREPARATION. Compaction shall be accomplished by sheepsfoot rollers, pneumatic-tired rollers, steel-wheeled rollers, vibratory compactors, or other approved equipment as appropriate for the soil type.

3.5 STRUCTURAL EXCAVATION

Ensure that footing subgrades have been inspected and approved by the Contracting Officer prior to concrete placement.

3.6 PREPARATION OF GROUND SURFACE FOR EMBANKMENTS

3.6.1 General Requirements

Ground surface on which fill is to be placed shall be stripped of live, dead, or decayed vegetation, rubbish, debris, and other unsatisfactory material; plowed, disked, or otherwise broken up to a depth of 200 mm ; pulverized; moistened or aerated as necessary; thoroughly mixed; and compacted to at least 95 percent laboratory maximum density for all materials. Compaction shall be accomplished by sheepsfoot rollers, pneumatic-tired rollers, steel-wheeled rollers, vibratory compactors, or other approved equipment. The prepared ground surface shall be scarified and moistened or aerated as required just prior to placement of embankment materials to assure adequate bond between embankment material and the prepared ground surface.

3.6.2 Frozen Material

Embankment shall not be placed on a foundation which contains frozen material, or which has been subjected to freeze-thaw action. This prohibition encompasses all foundation types, including the natural ground, all prepared subgrades (whether in an excavation or on an embankment) and all layers of previously placed and compacted earth fill which become the foundations for successive layers of earth fill. All material that freezes or has been subjected to freeze-thaw action during the construction work, or during periods of temporary shutdowns, such as, but not limited to, nights, holidays, weekends, winter shutdowns, or earthwork operations, shall be removed to a depth that is acceptable to the Government and replaced with new material. Alternatively, the material will be thawed, dried, reworked, and recompacted to the specified criteria before additional material is placed. The Government will determine when placement of fill shall cease due to cold weather. The Government may elect to use average daily air temperatures, and/or physical observation of the soils for his determination. Embankment material shall not contain frozen clumps of soil, snow, or ice.

3.7 EMBANKMENTS

3.7.1 Earth Embankments

Earth embankments shall be constructed from satisfactory materials free of organic or frozen material and rocks with any dimension greater than 75 mm. The material shall be placed in successive horizontal layers of loose material not more than 200 millimeters in depth. Each layer shall be spread uniformly on a soil surface that has been moistened or aerated as necessary, and scarified or otherwise broken up so that the fill will bond with the surface on which it is placed. After spreading, each layer shall be plowed, disked, or otherwise broken up; moistened or aerated as necessary; thoroughly mixed; and compacted to at least 95 percent laboratory maximum density for all materials. Compaction requirements for the upper portion of earth embankments forming subgrade for pavements shall be identical with those requirements specified in paragraph SUBGRADE PREPARATION. Compaction shall be accomplished by sheepsfoot rollers, pneumatic-tired rollers, steel-wheeled rollers, vibratory compactors, or other approved equipment.

3.8 SUBGRADE PREPARATION

3.8.1 Construction

Subgrade shall be shaped to line, grade, and cross section, and compacted as specified. This operation shall include plowing, disking, and any moistening or aerating required to obtain specified compaction. Soft or otherwise unsatisfactory material shall be removed and replaced with satisfactory excavated material or other approved material as directed. Rock encountered in the cut section shall be excavated to a depth of 150 mm below finished grade for the subgrade. Low areas resulting from removal of unsatisfactory material or excavation of rock shall be brought up to required grade with satisfactory materials, and the entire subgrade shall be shaped to line, grade, and cross section and compacted as specified. The elevation of the finish subgrade shall not vary more than 15 mm from the established grade and cross section.

3.8.2 Compaction

Compaction shall be accomplished by sheepsfoot rollers, pneumatic-tired rollers, steel-wheeled rollers, vibratory compactors, or other approved equipment. Except for paved areas, each layer of the embankment shall be compacted to at least 95 percent of laboratory maximum density.

3.8.2.1 Subgrade for Pavements

Subgrade for pavements shall be compacted to at least 95 percentage laboratory maximum density for the depth below the surface of the pavement shown.

3.9 OPENING AND DRAINAGE OF EXCAVATION AND BORROW PITS

Except as otherwise permitted, excavate borrow pits and other excavation areas providing adequate drainage. Transport overburden and other spoil material to designated spoil areas or otherwise dispose of as directed. Provide neatly trimmed and drained borrow pits after the excavation is completed. Ensure that excavation of any area, operation of borrow pits, or dumping of spoil material results in minimum detrimental effects on natural environmental conditions.

3.10 FINISHING

The surface of excavations, embankments, and subgrades shall be finished to a smooth and compact surface in accordance with the lines, grades, and cross sections or elevations shown. The degree of finish for graded areas shall be within 30 mm of the grades and elevations indicated except that the degree of finish for subgrades shall be specified in paragraph SUBGRADE PREPARATION. Gutters and ditches shall be finished in a manner that will result in effective drainage. The surface of areas to be turfed shall be finished to a smoothness suitable for the application of turfing materials.

3.10.1 Subgrade and Embankment Protection

During construction, embankments and excavations shall be kept shaped and drained. Ditches and drains along subgrade shall be maintained to drain effectively at all times. The finished subgrade shall not be disturbed by traffic or other operation and shall be protected and maintained by the Contractor in a satisfactory condition until ballast, subbase, base, or pavement is placed. The storage or stockpiling of materials on the

finished subgrade will not be permitted. No subbase, base course, or pavement shall be laid until the subgrade has been checked and approved, and in no case shall subbase, base, surfacing, or pavement, be placed on a muddy, spongy, or frozen subgrade.

3.10.2 Capillary Water Barrier

Place a capillary water barrier under concrete floor and area-way slabs grade directly on the subgrade and compact with a minimum of two passes of a hand-operated plate-type vibratory compactor.

3.10.3 Grading Around Structures

Construct areas within 1.5 m outside of each building and structure line true-to-grade, shape to drain, and maintain free of trash and debris until final inspection has been completed and the work has been accepted.

3.18 TESTING

Perform testing by a Corps validated commercial testing laboratory or the Contractor's validated testing facility. If the Contractor elects to establish testing facilities, do not permit work requiring testing until the Contractor's facilities have been inspected, Corps validated and approved by the Contracting Officer. Determine field in-place density in accordance with ASTM D 1556. When test results indicate, as determined by the Contracting Officer, that compaction is not as specified, remove the material, replace and recompact to meet specification requirements. Perform tests on recompacted areas to determine conformance with specification requirements. Appoint a registered professional civil engineer to certify inspections and test results. These certifications shall state that the tests and observations were performed by or under the direct supervision of the engineer and that the results are representative of the materials or conditions being certified by the tests. The following number of tests, if performed at the appropriate time, will be the minimum acceptable for each type operation.

3.11 Fill and Backfill Material Gradation

One test per 1150 cubic meters stockpiled or in-place source material. Determine gradation of fill and backfill material in accordance with ASTM C 136, ASTM D 422 and ASTM D 1140.

3.12 In-Place Densities

3.12.2 In-Place Densities

a. One test per 185 square meters, or fraction thereof, of each lift of fill or backfill for paved areas shall be performed.

b. One test per 100 linear meters, or fraction thereof, of each lift of excavated trench of embankment or backfill for paved areas shall be performed.

c. One test per 350 square meters, or fraction thereof, of each lift of fill or backfill for unpaved areas shall be performed.

d. One test per 200 linear meters, or fraction thereof, of each lift of excavated trench in unpaved areas shall be performed.

3.13 Moisture Contents

In the stockpile, excavation, or borrow areas, perform a minimum of two tests per day per type of material or source of material being placed during stable weather conditions in accordance with ASTM D 2216. During unstable weather, perform tests as dictated by local conditions and approved by the Contracting Officer.

3.14 Optimum Moisture and Laboratory Maximum Density

Perform tests for each type material or source of material including borrow material to determine the optimum moisture and laboratory maximum density values. One representative test per 1150 cubic meters of fill and backfill, or when any change in material occurs which may affect the optimum moisture content or laboratory maximum density.

3.15 Tolerance Tests for Subgrades

Perform continuous checks on the degree of finish specified in paragraph SUBGRADE PREPARATION during construction of the subgrades.

-- End of Section --

SECTION 02315

EXCAVATION, FILLING AND BACKFILLING FOR BUILDINGS

PART 1 GENERAL

1.1 REFERENCES

The publications listed below form a part of this specification to the extent referenced. The publications are referred to in the text by basic designation only.

ASTM INTERNATIONAL (ASTM)

ASTM D 1556	(2000) Density and Unit Weight of Soil in Place by the Sand-Cone Method
ASTM D 1557	(1998) Laboratory Compaction Characteristics of Soil Using Modified Effort (56,000 ft-lbf/cu. ft. (2,700 kN-m/cu.m.))
ASTM D 2167	(1994) Density and Unit Weight of Soil in Place by the Rubber Balloon Method
ASTM D 2216	(1998) Laboratory Determination of Water (Moisture) Content of Soil and Rock
ASTM D 2487	(2000) Classification of Soils for Engineering Purposes (Unified Soil Classification System)
ASTM D 2922	(1996e1) Density of Soil and Soil-Aggregate in Place by Nuclear Methods (Shallow Depth)
ASTM D 2937	(1994) Density of Soil in Place by the Drive-Cylinder Method
ASTM D 3017	(1988; R 1996e1) Water Content of Soil and Rock in Place by Nuclear Methods (Shallow Depth)
ASTM D 4318	(2000) Liquid Limit, Plastic Limit, and Plasticity Index of Soils

1.2 DEGREE OF COMPACTION

Degree of compaction is expressed as a percentage of the maximum density obtained by the test procedure presented in ASTM D 1557, abbreviated as percent laboratory maximum density. Required moisture range is plus or minus 2 percent of optimum moisture content.

PART 2 PRODUCTS

2.1 MATERIALS

2.1.1 Satisfactory Materials

Satisfactory materials shall comprise any materials classified by ASTM D 2487.

2.1.1.1 Soil Classifications for Satisfactory Materials per ASTM D 2487

GW: Well graded gravel with or without sand
GP: Poorly graded gravel with or without sand
GM: Silty gravel with or without sand
GP-GM: Poorly graded gravel with or without silt and sand
GW-GM: Well graded gravel with or without silt and sand
GC: Clayey gravel with or without sand
GP-GC: Poorly graded gravel with or without clay and sand (or silty clay and sand)
GM-GC: Silty, clayey gravel or without with sand
SW: Well graded sand with or without gravel
SM: Silty sand with or without gravel
SW-SM: Well graded sand with or without silt and gravel
SC: Clayey sand with or without gravel
SW-SC: Well graded sand with or without clay and gravel (or silty clay and gravel)

2.1.2 Unsatisfactory Materials

Materials which do not comply with the requirements for satisfactory materials are unsatisfactory. Unsatisfactory materials also include man-made fills, trash, refuse, or backfills from previous construction. Unsatisfactory material also includes material classified as satisfactory which contains root and other organic matter, frozen material, and stones larger than 75 mm . The Government shall be notified of any contaminated materials.

2.1.3 Cohesionless and Cohesive Materials

Cohesionless materials include materials classified in ASTM D 2487, or as listed below. Cohesive materials include materials classified as such in ASTM D 2487, or as listed below.

2.1.3.1 Cohesionless and Cohesive Materials per ASTM D 2487

Cohesionless Materials:

GW: Well graded gravel with or without sand
GP: Poorly graded gravel with or without sand
SW: Well graded sand with or without gravel
SP: Poorly graded sand with or without gravel

Cohesive Materials:

GC: Clayey gravel with or without sand
SC: Clayey sand with or without gravel
ML: Silt with or without sand or gravel, or sandy silt with or without gravel, or gravelly silt with or without sand
CL: Lean clay with or without sand or gravel, or sandy lean clay with

or without gravel, or gravelly lean clay with or without sand
MH: Elastic silt with or without sand or gravel, or sandy elastic silt with or without gravel, or gravelly elastic silt with or without sand
CH: Fat clay with or without sand or gravel, or sandy fat clay with or without gravel, or gravelly fat clay with or without sand

Other Types:

GM: Silty gravel with sand will be identified as cohesionless only when the fines are nonplastic.
SM: Silty sand with gravel will be identified as cohesionless only when the fines are nonplastic.

2.1.4 Expansive Soils

Expansive soils are defined as soils classified as CH, MH, ML, and CL that have liquid limits equal to or greater than 45 and plasticity indices equal to or greater than 25 when tested in accordance with ASTM D 4318.

2.1.5 Gypsiferous Soils

Gypsiferous soils are those found to contain 15% or more gypsum as determined by visual inspection. If there is a disargeement with the classification by visual inspection, the following test shall apply. A 1000 gram sample shall be heated to 110 degrees C for 24 hours. At this point the sample will be broken apart. The gypsum can be identified by its white color. The gypsum content can be determined by weight from a chemical analysis, if necessary, to establish exact quantities. All testing will be done at the expense of the Contractor.

2.1.6 Rock

Rock includes all natural solid mineral materials occurring in masses or fragments not classified as soil according to ASTM D 3017.

2.1.7 Topsoil

Topsoil shall be the uppermost part or layer of the soil normally moved in tillage or cultivation. Topsoil shall be considered to be the topmost mineral soil horizon containing an admixture of humified organic matter. Topsoil is located at or near the surface and characterized as the zone of maximum leaching or eluviation.

2.2 CAPILLARY WATER BARRIER

Capillary Water Barrier shall consist of clean, crushed, nonporous rock, crushed gravel, or uncrushed gravel. The maximum particle size shall be 37.5 mm and no more than 2 percent by weight shall pass the 4.75 mm size sieve. Thickness of capillary water barrier shall be as indicated on Drawings, but not less than 100 mm.

PART 3 EXECUTION

3.1 CLEARING AND GRUBBING

Clearing and grubbing is specified in Section 02231 CLEARING AND GRUBBING.

3.2 EXCAVATION

Excavation shall conform to the dimensions and elevations indicated for each building, structure, and footing except as specified, and shall include trenching for utility and foundation drainage systems to a point 1.5 m beyond the building line of each building and structure, excavation for outside grease interceptors, underground fuel tanks, and all work incidental thereof. Excavation shall extend a sufficient distance from walls and footings to allow for placing and removal of forms. Excavations below indicated depths will not be permitted except to remove unsatisfactory material. Unsatisfactory material encountered below the grades shown shall be removed as directed. Satisfactory material removed below the depths indicated, without specific direction of the Government, shall be replaced, at no additional cost to the Government, with satisfactory materials to the indicated excavation grade; except that concrete footings shall be increased in thickness to the bottom of the overdepth excavations and over-break in rock excavation. Satisfactory material shall be placed and compacted as specified in paragraph FILLING AND BACKFILLING. Determination of elevations and measurements of approved overdepth excavation of unsatisfactory material below grades indicated shall be done under the direction of the Government.

3.3 SHORING

Shoring, including sheet piling, shall be furnished and installed as necessary to protect workmen, banks, adjacent paving, structures, and utilities. Shoring, bracing, and sheeting shall be removed as excavations are backfilled, in a manner to prevent caving.

3.4 CLASSIFICATION OF EXCAVATION

Excavation will be unclassified regardless of the nature of material encountered.

3.5 BLASTING

Blasting will not be permitted.

3.6 UTILITY AND DRAIN TRENCHES

Trenches for underground utilities systems and drain lines shall be excavated to the required alignments and depths. The bottoms of trenches shall be graded to secure the required slope and shall be tamped if necessary to provide a firm pipe bed. Recesses shall be excavated to accommodate bells and joints so that pipe will be uniformly supported for the entire length. Rock, where encountered, shall be excavated to a depth of at least 150 mm below the bottom of the pipe, and the overdepth shall be backfilled with satisfactory material placed and compacted in conformance with paragraph FILLING AND BACKFILLING.

3.7 BORROW

Where satisfactory materials are not available in sufficient quantity from required excavations, approved materials shall be obtained as specified in Section 02300 EARTHWORK.

3.8 EXCAVATED MATERIALS

Satisfactory excavated material required for fill or backfill shall be

placed in the proper section of the permanent work required under this section or shall be separately stockpiled if it cannot be readily placed. Satisfactory material in excess of that required for the permanent work and all unsatisfactory material shall be disposed of as specified in Section 02300 EARTHWORK.

3.9 FINAL GRADE OF SURFACES TO SUPPORT CONCRETE

Excavation to final grade shall not be made until just before concrete is to be placed. Only excavation methods that will leave the foundation rock in a solid and unshattered condition shall be used. Approximately level surfaces shall be roughened, and sloped surfaces shall be cut as indicated into rough steps or benches to provide a satisfactory bond. Shales shall be protected from slaking and all surfaces shall be protected from erosion resulting from ponding or flow of water.

3.10 SUBGRADE PREPARATION

Unsatisfactory material in surfaces to receive fill or in excavated areas shall be removed and replaced with satisfactory materials as directed by the Government. Additional excavation and fill beyond the contract assumed quantites shall be paid by the Government at a negotiated unit rate. The surface shall be scarified to a depth of 150 mm before the fill is started. Sloped surfaces steeper than 1 vertical to 4 horizontal shall be plowed, stepped, benched, or broken up so that the fill material will bond with the existing material. When subgrades are less than the specified density, the ground surface shall be broken up to a minimum depth of 150 mm pulverized, and compacted to the specified density. When the subgrade is part fill and part excavation or natural ground, the excavated or natural ground portion shall be scarified to a depth of 300 mm and compacted as specified for the adjacent fill. Material shall not be placed on surfaces that are muddy, frozen, or contain frost. Compaction shall be accomplished by sheepsfoot rollers, pneumatic-tired rollers, steel-wheeled rollers, or other approved equipment well suited to the soil being compacted. Material shall be moistened or aerated as necessary to plus 2 percent and minus 1 percent of optimum moisture. Minimum subgrade density shall be as specified in paragraph FILLING AND BACKFILLING.

3.11 FILLING AND BACKFILLING

Satisfactory materials shall be used in bringing fills and backfills to the lines and grades indicated and for replacing unsatisfactory materials. Satisfactory materials shall be placed in horizontal layers not exceeding 200 mm in loose thickness, or 150 mm when hand-operated compactors are used. After placing, each layer shall be plowed, disked, or otherwise broken up, moistened or aerated as necessary, thoroughly mixed and compacted as specified. Backfilling shall not begin until construction below finish grade has been approved, underground utilities systems have been inspected, tested and approved, forms removed, and the excavation cleaned of trash and debris. Backfill shall be brought to indicated finish grade and shall include backfill for outside grease interceptors and underground fuel tanks. Backfill shall not be placed in wet or frozen areas. Where pipe is coated or wrapped for protection against corrosion, the backfill material up to an elevation 600 mm above sewer lines and 300 mm above other utility lines shall be free from stones larger than 25 mm in any dimension. Heavy equipment for spreading and compacting backfill shall not be operated closer to foundation or retaining walls than a distance equal to the height of backfill above the top of footing; the area remaining shall be compacted in layers not more than 100 mm in compacted

thickness with power-driven hand tampers suitable for the material being compacted. Backfill shall be placed carefully around pipes or tanks to avoid damage to coatings, wrappings, or tanks. Backfill shall not be placed against foundation walls prior to 7 days after completion of the walls. As far as practicable, backfill shall be brought up evenly on each side of the wall and sloped to drain away from the wall. Each layer of fill and backfill shall be compacted to not less than the percentage of maximum density specified below:

	Percent Laboratory maximum density	
	Cohesive material	Cohesionless material
Fill, embankment, and backfill		
Under structures, building slabs, steps, paved areas, around footings, and in trenches	95	95
Under sidewalks and grassed areas	95	95
Nonfrost susceptible materials	95	95
Subgrade		
Under building slabs, steps, and paved areas, top 300 mm	95	95
Under sidewalks, top 150 mm	95	95

Approved compacted subgrades that are disturbed by the Contractor's operations or adverse weather shall be scarified and compacted as specified herein before to the required density prior to further construction thereon. Recompaction over underground utilities and heating lines shall be by hand tamping.

3.12 TESTING

Testing shall be the responsibility of the Contractor and shall be performed at no additional cost to the Government. Testing shall be performed by an approved commercial testing laboratory or may be performed by the Contractor subject to approval. Field in-place density shall be determined in accordance with standard tests methods of testing soil in place by Sand-Cone method, Rubber Balloon Method, or by Nuclear Method (Shallow depth) as according to ASTM D 1556, ASTM D 2167, or ASTM D 2922. When ASTM D 2922 standard test methods for density of soil and soil-aggregate in place are used, the calibration curves shall be checked and adjusted if necessary by the procedure described in ASTM D 2922. ASTM D 2922 results in a wet unit weight of soil and when using this method ASTM D 3017 shall be used to determine the moisture content of the soil. The calibration curves furnished with the moisture gauges shall also be checked along with density calibration checks as described in ASTM D 3017. The calibration checks of both the density and moisture gauges shall be

made at the beginning of a job on each different type of material encountered and at intervals as directed by the Government. ASTM D 2937 or standard test method for density of soil in place by Drive-Cylinder Method shall be used only for soft, fine-grained, cohesive soils. The following number of tests, if performed at the appropriate time, shall be the minimum acceptable for each type operation.

3.12.1 In-Place Densities

In-place density and moisture content test results shall be included with the Contractor's daily construction quality control reports.

3.12.1.1 In-Place Density of Subgrades

Testing frequency to be determined by Government.

3.12.1.2 In-Place Density of Fills and Backfills

Testing frequency to be determined by Government for fill or backfill areas compacted by other than hand or hand-operated machines. The density for each lift of fill or backfill materials for trenches, pits, building perimeters or other structures or areas, which are compacted with hand or hand-operated machines shall be tested as determined by Government.

3.12.2 Moisture Content

In the stockpile, excavation or borrow areas, a minimum of two tests per day per type of material or source of materials being placed is required during stable weather conditions. During unstable weather, tests shall be made as dictated by local conditions and approved moisture content shall be tested in accordance with ASTM D 2216.

3.12.3 Optimum Moisture and Laboratory Maximum Density

Tests shall be made for each type material or source of material, including borrow material to determine the optimum moisture and laboratory maximum density values. Testing frequency to be determined by Government for fill and backfill, or when any change in material occurs which may affect the optimum moisture content or laboratory maximum density will be made.

3.13 CAPILLARY WATER BARRIER

Capillary water barrier under concrete floor and area-way slabs on grade shall be placed directly on the subgrade and shall be compacted with a minimum of two passes of a hand-operated plate-type vibratory compactor.

3.14 PROTECTION

Settlement or washing that occurs in graded, topsoiled, or backfilled areas prior to acceptance of the work, shall be repaired and grades reestablished to the required elevations and slopes.

-- End of Section --

SECTION 02316

EXCAVATION, TRENCHING, AND BACKFILLING FOR UTILITIES SYSTEMS

PART 1 GENERAL

1.1 REFERENCES

The publications listed below form a part of this specification to the extent referenced. The publications are referred to in the text by basic designation only.

ASTM INTERNATIONAL (ASTM)

ASTM D 1557	(1998) Laboratory Compaction Characteristics of Soil Using Modified Effort (56,000 ft-lbf/cu. ft. (2,700 kN-m/cu.m.))
ASTM D 2487	(2000) Classification of Soils for Engineering Purposes (Unified Soil Classification System)
ASTM D 3017	(1988; R 1996e1) Water Content of Soil and Rock in Place by Nuclear Methods (Shallow Depth)
ASTM D 4318	(2000) Liquid Limit, Plastic Limit, and Plasticity Index of Soils

1.2 DEGREE OF COMPACTION

Degree of compaction shall be expressed as a percentage of the maximum density obtained by the test procedure presented in ASTM D 1557. Required moisture range is plus or minus 2 percent of optimum moisture content.

PART 2 PRODUCTS

2.1 MATERIALS

2.1.1 Satisfactory Materials

Satisfactory materials shall comprise any materials so classified by ASTM D 2487, or as listed below.

2.1.1.1 Soil Classifications for Satisfactory Materials

A. GW: Well graded gravel with or without sand
B. GP: Poorly graded gravel with or without sand
C. GM: Silty gravel with or without sand
D. GP-GM: Poorly graded gravel with or without silt and sand
E. GW-GM: Well graded gravel with or without silt and sand
F. GC: Clayey gravel with or without sand
G. GP-GC: Poorly graded gravel with or without clay and sand (or silty clay and sand)

H. GM-GC: Silty, clayey gravel or without with sand
I. SW: Well graded sand with or without gravel
J. SM: Silty sand with or without gravel
K. SW-SM: Well graded sand with or without silt and gravel
L. SC: Clayey sand with or without gravel
M. SW-SC: Well graded sand with or without clay and gravel (or silty clay and gravel)

2.1.2 Unsatisfactory Materials

Materials which do not comply with the requirements for satisfactory materials are unsatisfactory. Unsatisfactory materials also include man-made fills, trash, refuse, or backfills from previous construction. Unsatisfactory material also includes material classified as satisfactory which contains root and other organic matter, frozen material, and stones larger than 75mm. The Government shall be notified of any contaminated materials.

2.1.3 Cohesionless and Cohesive Materials

Cohesionless materials shall include materials classified as suchin ASTM D 2487s, or as listed below. Cohesive materials shall include materials classified as such in ASTM D 2487, or as listed below.

2.1.3.1 Cohesionless and Cohesive Materials per ASTM D 2487

Cohesionless Materials:

GW: Well graded gravel with or without sand
GP: Poorly graded gravel with or without sand
SW: Well graded sand with or without gravel
SP: Poorly graded sand with or without gravel

Cohesive Materials:

GC: Clayey gravel with or without sand
SC: Clayey sand with or without gravel
ML: Silt with or without sand or gravel, or sandy silt with or without gravel, or gravelly silt with or without sand
CL: Lean clay with or without sand or gravel, or sandy lean clay with or without gravel, or gravelly lean clay with or without sand
MH: Elastic silt with or without sand or gravel, or sandy elastic silt with or without gravel, or gravelly elastic silt with or without sand
CH: Fat clay with or without sand or gravel, or sandy fat clay with or without gravel, or gravelly fat clay with or without sand

Other Types:

GM: Silty gravel with sand will be identified as cohesionless only when the fines are nonplastic.
SM: Silty sand with gravel will be identified as cohesionless only when the fines are nonplastic.

2.1.4 Expansive Soils

Expansive soils are defined as soils classified as CH, MH, ML, and CL that have liquid limits equal to or greater than 45 and plasticity indices equal to or greater than 25 when tested in accordance with ASTM D 4318.

2.1.5 Gypsiferous Soils

Gypsiferous soils are those found to contain 15% or more gypsum as determined by visual inspection. If there is a disargeement with the classification by visual inspection, the following test shall apply. A 1000 gram sample shall be heated to 110 degrees C for 24 hours. At this point the sample will be broken apart. The gypsum can be identified by its white color. The gypsum content can be determined by weight from a chemical analysis, if necessary, to establish exact quantities. All testing will be done at the expense of the Contractor.

2.1.6 Rock

Rock includes all natural solid mineral materials occurring in masses or fragments not classified as soil according to ASTM D 3017.

2.1.7 Topsoil

Topsoil shall be the uppermost part or layer of the soil normally moved in tillage or cultivation. Topsoil shall be considered to be the topmost mineral soil horizon containing an admixture of humified organic matter. topsoil is located at or near the surface and characterized as the zone of maximum leaching or eluviation.

2.1.8 Unyielding Material

Unyielding material shall consist of rock and gravelly soils with stones greater than 75 millimeters in any dimension or as defined by the pipe manufacturer, whichever is smaller.

2.1.9 Unstable Material

Unstable material shall consist of materials too wet to properly support the utility pipe, conduit, or appurtenant structure.

2.1.10 Select Granular Material

Select granular material shall consist of well-graded sand, gravel, crushed gravel, crushed stone or crushed slag composed of hard, tough and durable particles, and shall contain not more than 10 percent by weight of material passing a 0.075 mm mesh sieve and no less than 95 percent by weight passing the 25 mm sieve. The maximum allowable aggregate size shall be 38 millimeters, or the maximum size recommended by the pipe manufacturer, whichever is smaller.

2.1.11 Initial Backfill Material

Initial backfill shall consist of select granular material or satisfactory materials free from rocks 38 millimeters or larger in any dimension or free from rocks of such size as recommended by the pipe manufacturer, whichever is smaller. When the pipe is coated or wrapped for corrosion protection, the initial backfill material shall be free of stones larger than 38 millimeters in any dimension or as recommended by the pipe manufacturer, whichever is smaller.

2.2 PLASTIC MARKING TAPE

Basis of Design: Terra Tape, Sentry line Detectable

Plastic marking tape shall be acid and alkali-resistant polyethylene film, minimum 75 mm (3 inches) wide with minimum thickness of 0.102 mm (0.004 inch). The tape shall be manufactured with integral wires, foil backing or other means to enable detection by a metal detector. The tape shall be of a type specifically manufactured for marking and locating underground utilities. The metallic core of the tape shall be encased in a protective jacket or provided with other means to protect it from corrosion. Tape color shall be as specified in TABLE 1 and shall bear a continuous printed inscription describing the specific utility.

TABLE 1. Tape Color

Red:	Electric
Yellow:	Gas, Oil, Dangerous Materials
Orange:	Telephone, Telegraph, Television, Police, and Fire Communications
Blue:	Water Systems
Green:	Sewer Systems

PART 3 EXECUTION

3.1 EXCAVATION

Excavation shall be performed to the lines and grades indicated. Rock excavation shall include removal and disposition of material defined as rock in paragraph MATERIALS. Earth excavation shall include removal and disposal of material not classified as rock excavation. During excavation, material satisfactory for backfilling shall be stockpiled in an orderly manner at a distance from the banks of the trench equal to 1/2 the depth of the excavation, but in no instance closer than 600 mm. Excavated material not required or not satisfactory for backfill shall be removed from the site. Grading shall be done as may be necessary to prevent surface water from flowing into the excavation, and any water accumulating shall be removed to maintain the stability of the bottom and sides of the excavation. Unauthorized overexcavation shall be backfilled in accordance with paragraph BACKFILLING AND COMPACTION at no additional cost to the Government.

3.1.1 Trench Excavation Requirements

The trench shall be excavated as recommended by the manufacturer of the pipe to be installed. Trench walls below the top of the pipe shall be sloped, or made vertical, and of such width as recommended in the manufacturer's installation manual. Where no manufacturer's installation manual is available, trench walls shall be made vertical. Trench walls more than 1.5 meters high shall be shored, cut back to a stable slope, or provided with equivalent means of protection for employees who may be exposed to moving ground or cave in. Vertical trench walls more than 1.5 meters high shall be shored. Trench walls which are cut back shall be excavated to at least the angle of repose of the soil. Special attention shall be given to slopes which may be adversely affected by weather or moisture content. The trench width below the top of pipe shall not exceed 600 mm (24 inches) plus pipe outside diameter (O.D.) for pipes of less than 600 mm (24 inches) inside diameter and shall not exceed 900 mm (36 inches) plus pipe outside diameter for sizes larger than 600 mm (24 inches) inside diameter. Where recommended trench widths are exceeded, redesign, stronger pipe, or special installation procedures shall be utilized by the Contractor. The cost of redesign, stronger pipe, or special installation procedures shall be borne by the Contractor without any additional cost to

the Government.

3.1.1.1 Bottom Preparation

The bottoms of trenches shall be accurately graded to provide uniform bearing and support for the bottom quadrant of each section of the pipe. Bell holes shall be excavated to the necessary size at each joint or coupling to eliminate point bearing. Stones of 75 millimeters or greater in any dimension, or as recommended by the pipe manufacturer, whichever is smaller, shall be removed to avoid point bearing.

3.1.1.2 Removal of Unyielding Material

Where overdepth is not indicated and unyielding material is encountered in the bottom of the trench, such material shall be removed 100 millimeters below the required grade and replaced with suitable materials as provided in paragraph BACKFILLING AND COMPACTION.

3.1.1.3 Removal of Unstable Material

Where unstable material is encountered in the bottom of the trench, such material shall be removed to the depth directed and replaced to the proper grade with select granular material as provided in paragraph BACKFILLING AND COMPACTION. When removal of unstable material is required due to the Contractor's fault or neglect in performing the work, the resulting material shall be excavated and replaced by the Contractor without additional cost to the Government.

3.1.1.4 Excavation for Appurtenances

Excavation for manholes, catch-basins, inlets, or similar structures shall be sufficient to leave at least 300 mm clear between the outer structure surfaces and the face of the excavation or support members. Rock shall be cleaned of loose debris and cut to a firm surface either level, stepped, or serrated, as shown or as directed. Loose disintegrated rock and thin strata shall be removed. Removal of unstable material shall be as specified above. When concrete or masonry is to be placed in an excavated area, special care shall be taken not to disturb the bottom of the excavation. Excavation to the final grade level shall not be made until just before the concrete or masonry is to be placed.

3.1.1.5 Jacking, Boring, and Tunneling

Unless otherwise indicated, excavation shall be by open cut except that sections of a trench may be jacked, bored, or tunneled if, in the opinion of the Government, the pipe, cable, or duct can be safely and properly installed and backfill can be properly compacted in such sections.

3.1.2 Stockpiles

Stockpiles of satisfactory and unsatisfactory and wasted materials shall be placed and graded as specified. Stockpiles shall be kept in a neat and well drained condition, giving due consideration to drainage at all times. The ground surface at stockpile locations shall be cleared, grubbed, and sealed by rubber-tired equipment, excavated satisfactory and unsatisfactory materials shall be separately stockpiled. Stockpiles of satisfactory materials shall be protected from contamination which may destroy the quality and fitness of the stockpiled material. If the Contractor fails to protect the stockpiles, and any material becomes unsatisfactory, such

material shall be removed and replaced with satisfactory material from approved sources at no additional cost to the Government. Locations of stockpiles of satisfactory materials shall be subject to prior approval of the Government.

3.2 BACKFILLING AND COMPACTION

Backfill material shall consist of satisfactory material, select granular material, or initial backfill material as required. Backfill shall be placed in layers not exceeding 150 mm loose thickness for compaction by hand operated machine compactors, and 200 mm loose thickness for other than hand operated machines, unless otherwise specified. Each layer shall be compacted to at least 95 percent maximum density for all soils, unless otherwise specified.

3.2.1 Trench Backfill

Trenches shall be backfilled to the grade shown. The trench shall be backfilled to 0.6 meters above the top of pipe prior to performing the required pressure tests. The joints and couplings shall be left uncovered during the pressure test.

3.2.1.1 Replacement of Unyielding Material

Unyielding material removed from the bottom of the trench shall be replaced with select granular material or initial backfill material.

3.2.1.2 Replacement of Unstable Material

Unstable material removed from the bottom of the trench or excavation shall be replaced with select granular material placed in layers not exceeding 150 mm loose thickness.

3.2.1.3 Bedding and Haunching

Bedding and Haunching shall be graded coarse sand and gravels, granular and noncohesive with maximum size of 19 mm and not more than 5% passing No. 200 (75 µm) sieve. Bedding for all culverts and sewer, water pipes less that 1.25 meters under road crossings shall have reinforced concrete cover at least 150 mm thick around pipe. See details on sheet SC-10.

3.2.1.4 Initial backfill

Initial backfill shall be finely divided, job-excavated sand, or borderline clean with fines sand-clay or gravel-clay material free from debris, stones larger than 19 mm, organic matter, and frozen material, with less than 12% passing a No. 200 (75 µm) sieve.

3.2.1.5 Carefully placed backfill

Carefully placed backfill shall be job excavated material free from debris, stones larger than 1/2" (13 mm), organic matter, and frozen material.

3.2.1.6 Remaining Backfill

The remainder of the trench, except for special materials for roadways, shall be filled with satisfactory material. Backfill material shall be placed and compacted as follows:

a. Roadways: Backfill shall be placed up to the elevation at which the requirements in Section 02300 EARTHWORK control. Water flooding or jetting methods of compaction will not be permitted.

b. Sidewalks, Turfed or Seeded Areas and Miscellaneous Areas: Backfill shall be deposited in layers of a maximum of 300 mm loose thickness, and compacted to 95 percent maximum density for all soils. Compaction by water flooding or jetting will not be permitted. This requirement shall also apply to all other areas not specifically designated above.

3.2.2 Backfill for Appurtenances

After the manhole, catchbasin, inlet, or similar structure has been constructed and the concrete has been allowed to cure for 7 days, backfill shall be placed in such a manner that the structure will not be damaged by the shock of falling earth. The backfill material shall be deposited and compacted as specified for final backfill, and shall be brought up evenly on all sides of the structure to prevent eccentric loading and excessive stress.

3.3 SPECIAL REQUIREMENTS

Special requirements for both excavation and backfill relating to the specific utilities are as follows:

3.3.1 Water Lines and Sanitary Sewers

Trenches shall be of a depth to provide a minimum cover of 0.8 meters from the existing ground surface, or from the indicated finished grade, whichever is lower, to the top of the pipe.

3.3.2 Electrical Distribution System

Direct burial cable and conduit or duct line shall have a minimum cover of 600 mm from the finished grade, unless otherwise indicated. Special trenching requirements for direct-burial electrical cables and conduits are specified in Section 16375 ELECTRICAL DISTRIBUTION SYSTEM, UNDERGROUND.

3.3.3 Plastic Marking Tape

Warning tapes shall be installed directly above the pipe, at a depth of 450 millimeters below finished grade unless otherwise shown.

3.4 INSPECTION

Inspection shall be the responsibility of the Contractor and shall be performed at no additional cost to the Government.

3.4.1 Displacement of Sewers

After trench backfill has been compacted to 0.6 meters above the top of the pipe, the pipe shall be inspected to determine whether significant displacement has occurred. This inspection shall be conducted in the presence of the Government. Pipe sizes larger than 900 mm (36 inches) shall be entered and examined, while smaller diameter pipe shall be inspected by shining a light between manholes or manhole locations. If, in the judgement of the Government , the interior of the pipe shows poor alignment or any other defects that would cause improper functioning of the

system, the defects shall be remedied as directed at no additional cost to the Government.

-- End of Section --

SECTION 03100

STRUCTURAL CONCRETE FORMWORK

PART 1 GENERAL

1.1 REFERENCES

The publications listed below form a part of this specification to the extent referenced. The publications are referred to in the text by basic designation only.

ACI INTERNATIONAL (ACI)

ACI 347R (1994) Guide to Formwork for Concrete

1.2 SUBMITTALS

Government approval is required for submittals with a "G" designation; submittals not having a "G" designation are for information only. When used, a designation following the "G" designation identifies the office that will review the submittal for the Government. The following shall be submitted in accordance with Section 01330 SUBMITTAL PROCEDURES:

SD-02 Shop Drawings

Formwork; G AED

Drawings showing details of formwork, including dimensions of fiber voids, joints, supports, studding and shoring, and sequence of form and shoring removal.

SD-03 Product Data

Design

Design analysis and calculations for form design and methodology used in the design.

Form Materials

Manufacturer's data including literature describing form materials, accessories, and form releasing agents.

Form Releasing Agents

Manufacturer's recommendation on method and rate of application of form releasing agents.

1.3 DESIGN

Formwork shall be designed in accordance with methodology of ACI 347R for anticipated loads, lateral pressures, and stresses. Forms shall be capable of producing a surface which meets the requirements of the class of finish specified in Section 03300 CAST-IN-PLACE STRUCTURAL CONCRETE. Forms shall

be capable of withstanding the pressures resulting from placement and vibration of concrete.

PART 2 PRODUCTS

2.1 FORM MATERIALS

2.1.1 Forms

Forms for finished surfaces, except where concrete is placed against earth, shall be wood or steel or other approved concrete form material.

2.1.2 Form Releasing Agents

Form releasing agents shall be commercial formulations that will not bond with, stain or adversely affect concrete surfaces. Agents shall not impair subsequent treatment of concrete surfaces depending upon bond or adhesion nor impede the wetting of surfaces to be cured with water or curing compounds.

PART 3 EXECUTION

3.1 INSTALLATION

3.1.1 Formwork

Forms shall be mortar tight, properly aligned and adequately supported to produce concrete surfaces meeting the surface requirements specified in Section 03300 CAST-IN-PLACE STRUCTURAL CONCRETE and conforming to construction tolerance given in TABLE 1. Where forms for continuous surfaces are placed in successive units, the forms shall fit over the completed surface to obtain accurate alignment of the surface and to prevent leakage of mortar. Forms shall not be reused if there is any evidence of surface wear and tear or defects which would impair the quality of the surface. Surfaces of forms to be reused shall be cleaned of mortar from previous concreting and of all other foreign material before reuse. Form ties that are to be completely withdrawn shall be coated with a nonstaining bond breaker.

3.2 CHAMFERING

Except as otherwise shown, external corners that will be exposed shall be chamfered, beveled, or rounded by moldings placed in the forms.

3.3 COATING

The coating shall be used as recommended in the manufacturer's printed or written instructions. Forms for finished surfaces may be wet with water in lieu of coating immediately before placing concrete, except that in cold weather with probable freezing temperatures, coating shall be mandatory. Surplus coating on form surfaces and coating on reinforcing steel and construction joints shall be removed before placing concrete.

3.4 REMOVAL OF FORMS

Forms shall be removed preventing injury to the concrete and ensuring the complete safety of the structure. Formwork for columns, walls, side of beams and other parts not supporting the weight of concrete may be removed when the concrete has attained sufficient strength to resist damage from

the removal operation but not before at least 24 hours has elapsed since concrete placement. Supporting forms and shores shall not be removed from beams, floors and walls until the structural units are strong enough to carry their own weight and any other construction or natural loads. Supporting forms or shores shall not be removed before the concrete strength has reached 70 percent of design strength, as determined by field cured cylinders or other approved methods. This strength shall be demonstrated by job-cured test specimens, and by a structural analysis considering the proposed loads in relation to these test strengths and the strength of forming and shoring system. The job-cured test specimens for form removal purposes shall be provided in numbers as directed and shall be in addition to those required for concrete quality control. The specimens shall be removed from molds at the age of 24 hours and shall receive, insofar as possible, the same curing and protection as the structures they represent.

TABLE 1

TOLERANCES FOR FORMED SURFACES

1.	Variations from the plumb:	In any 3 m of length -------- 6 mm
	a. In the lines and surfaces of walls	Maximum for entire length -- 25 mm
2.	Variation from the level or from the grades indicated on the drawings:	In any 3 m of length ------- 6 mm In any bay or in any 6 m of length ---------- 10 mm
	a. In beam soffits	Maximum for entire length - 20 mm
	b. In exposed lintels, sills, bond beams, and other conspicuous lines	In any bay or in any 6 m of length ---------- 6 mm Maximum for entire length - 13 mm
3.	Variation of the linear building lines from established position in plan	In any 6 m ---------- 13 mm Maximum ---------- 25 mm
4.	Variation in cross-sectional dimensions of beams and walls	Minus ---------- 6 mm Plus ---------- 13 mm
5.	Footings:	
	a. Variation of dimensions in plan	Minus ---------- 13 mm Plus ---------- 50 mm when formed or plus 75 mm when placed against unformed excavation
	b. Misplacement of eccentricity	2 percent of the footing width in the direction of misplacement but not more than --------- 50 mm

TABLE 1

TOLERANCES FOR FORMED SURFACES

c.	Reduction in thickness	Minus ---------- 5 percent of specified thickness

-- End of Section --

SECTION 03200

CONCRETE REINFORCEMENT

PART 1 GENERAL

1.1 REFERENCES

The publications listed below form a part of this specification to the extent referenced. The publications are referred to in the text by basic designation only.

ACI INTERNATIONAL (ACI)

ACI 318M/318RM	(2002) Building Code Requirements for Structural Concrete and Commentary (Metric)

ASTM INTERNATIONAL (ASTM)

ASTM A 82	(2001) Steel Wire, Plain, for Concrete Reinforcement
ASTM A 615/A 615M	(2001b) Deformed and Plain Billet-Steel Bars for Concrete Reinforcement
ASTM A 706/A 706M	(1998) Low-Alloy Steel Deformed and Plain Bars for Concrete Reinforcement

1.2 SUBMITTALS

Government approval is required for submittals with a "G" designation; submittals not having a "G" designation are for information only. The following shall be submitted in accordance with Section 01335 SUBMITTAL PROCEDURES for design built project:

SD-07 Mill Certificate

Reinforcing Steel; G

1.3 DELIVERY AND STORAGE

Reinforcement and accessories shall be stored off the ground on platforms, skids, or other supports.

PART 2 PRODUCTS

2.1 REINFORCING STEEL

Reinforcing steel shall be deformed bars conforming to ASTM A 615/A 615M or ASTM A 706/A 706M, grade 60 sizes as indicated. Cold drawn wire used for spiral reinforcement shall conform to ASTM A 82.

2.2 WIRE TIES

Wire ties shall be 1.6 mm(16 gauge) or heavier black steel wire.

2.3 Welded Wire Fabric (WWF)

WWF shall conform to ASTM A185

PART 3 EXECUTION

3.1 REINFORCEMENT

Reinforcement shall be fabricated to shapes and dimensions shown and shall conform to the requirements of ACI 318M/318RM. Reinforcement shall be cold bent unless otherwise authorized. Bending may be accomplished in the field or at the mill. Bars shall not be bent after embedment in concrete. Safety caps shall be placed on all exposed ends of vertical concrete reinforcement bars that pose a danger to life safety. Wire tie ends shall face away from the forms.

3.1.1 Placement

Reinforcement shall be free from loose rust and scale, dirt, oil, or other deleterious coating that could reduce bond with the concrete. Reinforcement shall be placed in accordance with ACI 318M/318RM at locations shown plus or minus one bar diameter. Reinforcement shall not be continuous through expansion joints and shall be as indicated through construction or contraction joints. Concrete coverage shall be as indicated or as required by ACI 318M/318RM. If bars are moved more than one bar diameter to avoid interference with other reinforcement, conduits or embedded items, the resulting arrangement of bars, including additional bars required to meet structural requirements, shall be approved before concrete is placed.

3.1.2 Splicing

Splices of reinforcement shall conform to ACI 318M/318RM and shall be made only as required or indicated. Splicing shall be by lapping or by mechanical connection; except that lap splices shall not be used for bars larger than No. 11 (35 mm)unless otherwise indicated. Lapped bars shall be placed in contact and securely tied or spaced transversely apart to permit the embedment of the entire surface of each bar in concrete. Lapped bars shall not be spaced farther apart than one-fifth the required length of lap or 150 mm. Mechanical butt splices shall be in accordance with the recommendation of the manufacturer of the mechanical splicing device. Butt splices shall develop 125 percent of the specified minimum yield tensile strength of the spliced bars or of the smaller bar in transition splices. Bars shall be flame dried before butt splicing. Adequate jigs and clamps or other devices shall be provided to support, align, and hold the longitudinal centerline of the bars to be butt spliced in a straight line.

3.2 WELDED-WIRE FABRIC PLACEMENT

Welded-wire fabric shall be placed as indicated on Drawings. Fabric placed in slabs on grade shall be continuous between expansion, construction, and contraction joints. Fabric placement at joints shall be as indicated. Lap splices shall be made in such a way that the overlapped area equals the distance between the outermost crosswires plus 50 mm. Laps shall be staggered to avoid continuous laps in either direction. Fabric shall be

wired or clipped together at laps at intervals not to exceed 1.2 m. Fabric shall be positioned by the use of supports.

3.3 DOWEL INSTALLATION

Dowels shall be installed in slabs on grade at locations indicated and at right angles to joint being doweled. Dowels shall be accurately positioned and aligned parallel to the finished concrete surface before concrete placement. Dowels shall be rigidly supported during concrete placement. One end of dowels shall be coated with a bond breaker.

-- End of Section --

SECTION 03256

HYDROPHILIC RUBBER WATERSTOPS

PART 1 GENERAL

1.1 REFERENCES

The publications listed below form a part of this specification to the extent referenced. The publications are referred to within the text by the basic designation only.

ASTM INTERNATIONAL (ASTM)

ASTM D 1149	(1999) Standard Test Method for Rubber Deterioration-Surface Ozone Cracking in a Chamber
ASTM D 1203	(2003) Standard Test Methods for Volatile Loss From Plastics Using Activated Carbon Methods
ASTM D 2240	(2004) Standard Test Method for Rubber Property - Durometer Hardness
ASTM D 638	(2002) Tensile Properties of Plastics

1.2 SUBMITTALS

Government approval is required for submittals with a "G" designation; submittals not having a "G" designation are for information only. When used, a designation following the "G" designation identifies the office that will review the submittal for the Government. The following shall be submitted in accordance with Section 01330 SUBMITTAL PROCEDURES:

SD-03 Product Data; G

Hydrophilic Rubber Waterstop

Manufacturer's printed data and literature for all specified materials and locations where materials are to be used.

1.3 QUALITY ASSURANCE

A. Reject and replace waterstops which have become wet or exhibit swelling prior to concrete placement.

B. Require a manufacturer's representative to visit the job site before any waterstops are installed to demonstrate the correct installation and splicing procedures.

C. Position waterstops in joints as indicated.

D. Provide waterstops in maximum practical lengths to minimize joints.

E. Use adhesives manufactured by or recommended by the waterstop manufacturer for attachment of the waterstop to concrete.

F. Waterstops shall be positioned to provide a minimum of 75 mm concrete cover.

1.4 DELIVERY, STORAGE, AND HANDLING

A. Transport, handle and deliver materials to the job site in the manufacturer's sealed bags, unopened containers or banded pallets.

B. Store materials off the ground on a platform or skids and protect with covers from snow, rain and ground splatter.

C. Store hydrophilic waterstops under cover in a dry cool location, out of direct sunlight. Waterstops shall be maintained in a dry condition until concrete placement.

PART 2 PRODUCTS

2.1 HYDROPHILIC RUBBER WATERSTOPS

A. Provide hydrophilic rubber gasket waterstops fabricated of non-vulcanized rubber, chloroprene rubber, urethane polymers, vinylester polymers or combinations of these materials.

B. Waterstops shall be of solid construction and 10 mm x 20 mm minimum in cross section.

C. Provide waterstop as recommended by manufacturer for specific installation.

D. Waterstops containing bentonite shall not be used.

E. Provide hydrophilic gasket waterstops which meet or exceed the criteria in Table 03256-1.

Table 03256-1

Property	Test Method	Limit
Ultimate Elongation	ASTM D 638	70% minimum
Tensile Strength	ASTM D 638	170 kPa minimum
Ozone Resistance	ASTM D 1149	No Failure
Volatile Loss	ASTM D 1203	0.50% maximum
Hardness, Shore A	ASTM D 2240	20 to 60

PART 3 EXECUTION

3.1 INSTALLATION

A. Provide hydrophilic rubber gasket waterstops where specifically indicated.

B. Center waterstops in joints unless otherwise indicated.

C. Consolidate concrete during placement in vicinity of waterstop without damaging or dislodging waterstop.

D. Clean joint surface of dirt, dust, debris and laitence immediately before applying waterstop and remove standing water.

E. Protect waterstops from moisture until concrete is placed. Waterstops which exhibit swelling prior to concrete placement shall be removed and replaced at the contractor's expense.

3.2 HYDROPHILIC GASKET WATERSTOPS

A. Install hydrophilic gasket waterstops in continuous lengths to minimize joints. Provide waterstop in one continuous length insofar as practicable. Butt ends at joints of waterstop or overlap a minimum of 50 mm per manufacturer's instructions.

B. Seal joints in hydrophilic gasket waterstops with a hydrophilic rubber paste compound as recommended by the manufacturer.

C. Do not bend hydrophilic gasket waterstop. Cut square and butt joints at corners.

D. Waterstop shall be in continuous contact with the concrete surface.

E. Attach hydrophilic gasket waterstop to concrete surface by one of the following methods:

1. Fix hydrophilic gasket waterstop to concrete surface with continuous bead of hydrophilic rubber paste or adhesive. Paste or adhesive shall be provided by or as recommended by the waterstop manufacturer.

2. Fix hydrophilic gasket waterstop to concrete surface with masonry or concrete nails or powder activated fasteners at a maximum 300 mm spacing.

F. Provide one fastener one inch from the top and a second fastener four inches from the top of vertical hydrophilic gasket waterstops regardless of which fastening method is used.

G. Do not compress or otherwise deform hydrophilic gasket waterstop when fastening to concrete.

H. Do not wrap hydrophilic gasket waterstops around pipes less than the minimum diameter recommended in the manufacturer's printed instructions.

-- End of Section --

SECTION 03300

CAST-IN-PLACE STRUCTURAL CONCRETE

PART 1 GENERAL

1.1 REFERENCES

The publications listed below form a part of this specification to the extent referenced. The publications are referred to in the text by basic designation only.

ACI INTERNATIONAL (ACI)

ACI 117/117R	(1990; Errata) Standard Tolerances for Concrete Construction and Materials
ACI 305R	(1999) Hot Weather Concreting

ASTM INTERNATIONAL (ASTM)

ASTM C 143/C 143M	(2000) Slump of Hydraulic Cement Concrete
ASTM C 150	(2002) Portland Cement
ASTM C 171	(1997a) Sheet Materials for Curing Concrete
ASTM C 172	(1999) Sampling Freshly Mixed Concrete
ASTM C 231	(1997el) Air Content of Freshly Mixed Concrete by the Pressure Method
ASTM C 260	(2000) Air-Entraining Admixtures for Concrete
ASTM C 31/C 31M	(2000e1) Making and Curing Concrete Test Specimens in the Field
ASTM C 39/C 39M	(2001) Compressive Strength of Cylindrical Concrete Specimens
ASTM C 42/C 42M	(1999) Obtaining and Testing Drilled Cores and Sawed Beams of Concrete
ASTM C 494/C 494M	(1999ae1) Chemical Admixtures for Concrete
ASTM C 94/C 94M	(2000e2) Ready-Mixed Concrete
ASTM E 96	(2000e1) Water Vapor Transmission of Materials

U.S. ARMY CORPS OF ENGINEERS (USACE)

COE CRD-C 400	(1963) Requirements for Water for Use in Mixing or Curing Concrete

COE CRD-C 521	(1981) Standard Test Method for Frequency and Amplitude of Vibrators for Concrete
COE CRD-C 540	(1971; R 1981) Standard Specification for Nonbituminous Inserts for Contraction Joints in Portland Cement Concrete Airfield Pavements, Sawable Type
COE CRD-C 572	(1974) Corps of Engineers Specifications for Polyvinylchloride Waterstop
COE CRD-C 94	(1995) Surface Retarders

1.2 SUBMITTALS

Government approval is required for submittals with a "G" designation; submittals not having a "G" designation are for information only. When used, a designation following the "G" designation identifies the office that will review the submittal for the Government. The following shall be submitted in accordance with Section 01330 SUBMITTAL PROCEDURES:

SD-03 Product Data

Mixture Proportions; G AED

The results of trial mixture design studies along with a statement giving the maximum nominal coarse aggregate size and the proportions of ingredients that will be used in the manufacture of each strength or class of concrete, at least 14 days prior to commencing concrete placing operations. Aggregate weights shall be based on the saturated surface dry condition. The statement shall be accompanied by test results from an approved independent commercial testing laboratory, showing that mixture design studies have been made with materials proposed for the project and that the proportions selected will produce concrete of the qualities indicated. No substitutions shall be made in the materials used in the mixture design studies without additional tests to show that the quality of the concrete is satisfactory.

SD-04 Samples

Surface Retarder

Sample of surface retarder material with manufacturer's instructions for application in conjunction with air-water cutting.

SD-06 Test Reports

Testing and Inspection for Contractor Quality Control; G AED

Certified copies of laboratory test reports, including mill tests and all other test data, for portland cement, blended cement, pozzolan, ground granulated blast furnace slag, silica fume, aggregate, admixtures, and curing compound proposed for use on this project.

SD-07 Certificates

Qualifications

Written documentation for Contractor Quality Control personnel.

1.3 GENERAL REQUIREMENTS

1.3.1 Tolerances

Except as otherwise specified herein, tolerances for concrete batching, mixture properties, and construction as well as definition of terms and application practices shall be in accordance with ACI 117/117R. Level and grade tolerance measurements of slabs shall be made as soon as possible after finishing; when forms or shoring are used, the measurements shall be made prior to removal.

1.3.1.1 Floors

For the purpose of this Section the following terminology correlation between ACI 117/117R and this Section shall apply:

Floor Profile Quality Classification From ACI 117/117R	This Section
Conventional Bullfloated	Same
Conventional Straightedged	Same

Levelness tolerance shall not apply where design requires floors to be sloped to drains or sloped for other reasons.

1.3.2 Strength Requirements and w/c Ratio

1.3.2.1 Strength Requirements

Specified compressive strength (f'c) shall be as follows:

COMPRESSIVE STRENGTH	STRUCTURE OR PORTION OF STRUCTURE
280 kg per cm sq. at 28 days	ALL CONCRETE WORK

a. Evaluation of Concrete Compressive Strength. Compressive strength specimens (152 by 305 mm cylinders) shall be fabricated by the Contractor and laboratory cured in accordance with ASTM C 31/C 31M and tested in accordance with ASTM C 39/C 39M. The strength of the concrete will be considered satisfactory so long as the average of all sets of three consecutive test results equals or exceeds the specified compressive strength f'c and no individual test result falls below the specified strength f'c by more than 3.5 MPa. A "test" is defined as the average of two companion cylinders, or if only one cylinder is tested, the results of the single cylinder test. Additional analysis or testing, including taking cores and/or load tests may be required at the Contractor's expense when the strength of the concrete in the structure is considered potentially deficient.

b. Investigation of Low-Strength Compressive Test Results. When any strength test of standard-cured test cylinders falls below the specified strength requirement by more than 2.11 MPa or if tests of field-cured cylinders indicate deficiencies in protection and curing, steps shall be taken to assure that the load-carrying

capacity of the structure is not jeopardized. When the strength of concrete in place is considered potentially deficient, cores shall be obtained and tested in accordance with ASTM C 42/C 42M. At least three representative cores shall be taken from each member or area of concrete in place that is considered potentially deficient. The location of cores will be determined by the Government to least impair the strength of the structure. Concrete in the area represented by the core testing will be considered adequate if the average strength of the cores is equal to at least 85 percent of the specified strength requirement and if no single core is less than 75 percent of the specified strength requirement. Non-destructive tests (tests other than test cylinders or cores) shall not be used as a basis for acceptance or rejection. The Contractor shall perform the coring and repair the holes. Cores will be tested by the Government .

1.3.2.2 Water-Cement Ratio

Maximum water-cement ratio (w/c) for normal weight concrete shall be as follows:

WATER-CEMENT RATIO, BY WEIGHT	STRUCTURE OR PORTION OF STRUCTURE
0.45	ALL STRUCTURES

1.3.3 Air Entrainment

Normal weight concrete shall be air entrained to contain between 3 and 5 percent total air.Specified air content shall be attained at point of placement into the forms. Air content for normal weight concrete shall be determined in accordance with ASTM C 231.

1.3.4 Slump

Slump of the concrete, as delivered to the point of placement into the forms, shall be within the following limits. Slump shall be determined in accordance with ASTM C 143/C 143M .

Structural Element	Slump Minimum	Slump Maximum
Foundation walls, substructure walls, footings, slabs	25 mm	100 mm

1.3.5 Concrete Temperature

The temperature of the concrete as delivered shall not exceed 32 degrees C. When the ambient temperature during placing is 5 degrees C or less, or is expected to be at any time within 6 hours after placing, the temperature of the concrete as delivered shall be between 12 and 25 degrees C.

1.3.6 Size of Coarse Aggregate

The largest feasible nominal maximum size aggregate (NMSA) specified in paragraph AGGREGATES shall be used in each placement. However, nominal maximum size of aggregate shall not exceed any of the following: three-fourths of the minimum cover for reinforcing bars, three-fourths of

the minimum clear spacing between reinforcing bars, one-fifth of the narrowest dimension between sides of forms, or one-third of the thickness of slabs or toppings.

1.4 MIXTURE PROPORTIONS

Concrete shall be composed of portland cement, other cementitious and pozzolanic materials as specified, aggregates, water and admixtures as specified. Mixture shall follow approved proportions at all times.

1.5 STORAGE OF MATERIALS

Cement and other cementitious materials shall be stored in weathertight buildings, bins, or silos which will exclude moisture and contaminants and keep each material completely separated. Aggregate stockpiles shall be arranged and used in a manner to avoid excessive segregation and to prevent contamination with other materials or with other sizes of aggregates. Aggregate shall not be stored directly on ground unless a sacrificial layer is left undisturbed. Reinforcing bars and accessories shall be stored above the ground on platforms, skids or other supports. Other materials shall be stored in such a manner as to avoid contamination and deterioration. Admixtures which have been in storage at the project site for longer than 6 months or which have been subjected to freezing shall not be used unless retested and proven to meet the specified requirements. Materials shall be capable of being accurately identified after bundles or containers are opened.

1.6 GOVERNMENT ASSURANCE INSPECTION AND TESTING

Day-to day inspection and testing shall be the responsibility of the Contractor Quality Control (CQC) staff. However, representatives of the Government can and will inspect construction as considered appropriate and will monitor operations of the Contractor's CQC staff. Government inspection or testing will not relieve the Contractor of any of his CQC responsibilities.

1.6.1 Materials

The Government will sample and test aggregates, cementitious materials, other materials, and concrete to determine compliance with the specifications as considered appropriate. The Contractor shall provide facilities and labor as may be necessary for procurement of representative test samples. Samples of aggregates will be obtained at the point of batching. Other materials will be sampled from storage at the jobsite or from other locations as considered appropriate. Samples may be placed in storage for later testing when appropriate.

1.6.2 Fresh Concrete

Fresh concrete will be sampled as delivered in accordance with ASTM C 172 and tested in accordance with these specifications, as considered necessary.

1.6.3 Hardened Concrete

Tests on hardened concrete will be performed by the Government when such tests are considered necessary.

1.6.4 Inspection

Concrete operations may be tested and inspected by the Government as the project progresses. Failure to detect defective work or material will not prevent rejection later when a defect is discovered nor will it obligate the Government for final acceptance.

PART 2 PRODUCTS

2.1 MANUFACTURER

Basis of Design: As indicated in this section.

Acceptable Manufacturers:

1. Basis of Design manufacturers.
2. Equivalent product complying with requirements of this specification for proposed variant products.

2.2 CEMENTITIOUS MATERIALS

Cementitious Materials shall be portland cement, portland-pozzolan cement, or portland cement in combination with pozzolan and shall conform to appropriate specifications listed below. Use of cementitious materials in concrete which will have surfaces exposed in the completed structure shall be restricted so there is no change in color, source, or type of cementitious material.

2.2.1 Portland Cement

Hydraulic cement produced by pulverizing clinker consisting primarily of hydraulic calcium silicates, typically containing forms of calcium sulfate as interground addition and shall conform with ASTM C 150, Type I (one) cement.

2.3 AGGREGATES

Locally available, and acceptable to Government.

2.4 CHEMICAL ADMIXTURES

2.4.1 Air-Entraining Admixture

ASTM C 260 and shall consistently entrain the air content in the specified ranges under field conditions.

2.4.2 Water-Reducing or Retarding Admixture

ASTM C 494/C 494M Type A, B, or D, except that the 6-month and 1-year compressive and flexural strength tests are waived.

2.4.3 Surface Retarder

COE CRD-C 94.

2.5 CURING MATERIALS

2.5.1 Impervious-Sheet

Impervious-sheet materials shall conform to ASTM C 171 type optional.

2.5.2 Burlap and Cotton Mat

Burlap and cotton mat may be used for curing .

2.6 WATER

Fresh, clean, potable mixing water or nonpotable water which meets the requirements of COE CRD-C 400 shall be used.

2.7 VAPOR BARRIER

Vapor barrier shall be polyethylene sheeting with a minimum thickness of 0.15 mm (6 mils) or other equivalent material having a vapor permeance rating not exceeding 30 nanograms per Pascal per second per square meter (0.5 perms) as determined in accordance with ASTM E 96.

2.8 JOINT MATERIALS

2.8.1 Waterstops

Intersection and change of direction waterstops shall be shop fabricated. See Section 03256 HYDROPHOLIC RUBBER WATERSTOPS.

2.8.2 Control Joints in Slabs

Sawable type control joint inserts shall conform to COE CRD-C 540. Nonsawable joint inserts shall have sufficient stiffness to permit placement in plastic concrete without undue deviation from a straight line and shall conform to the physical requirements of COE CRD-C 540, with the exception of Section 3.4 "Resistance to Sawing". Plastic inserts shall be polyvinyl chloride conforming to the materials requirements of COE CRD-C 572.

2.9 ACCESSORIES

2.9.1 Expansion Board

For expansion board indicated at concrete joints on Drawings, provide asphalt impregnated fiberboard and sealing compound. Install as indicated on Drawings.

Basis of Design: Bitucell, fiber board sheet, by FOSROC.

2.9.2 Joint Backing

Closed-cell polyethylene cord, refer to Section 07900

2.9.3 Joint Sealant

Refer to Section 07900.

2.10 EPOXY ANCHOR ADHESIVES

An epoxy-resin grout shall be used to bond steel anchors to concrete, and

shall be a moisture insensitive, low creep, structural adhesive. The epoxy shall conform to manufacturer's recommendations for the application. The epoxy adhesive shall be conditioned, proportioned, mixed, and applied in accordance with the manufacturer's recommendations, except as otherwise specified herein or indicated on the drawings.

PART 3 EXECUTION

3.1 PREPARATION FOR PLACING

Before commencing concrete placement, the following shall be performed. Surfaces to receive concrete shall be clean and free from frost, ice, mud, and water. Forms shall be in place, cleaned, coated, and adequately supported, in accordance with Section 03100 STRUCTURAL CONCRETE FORMWORK. Reinforcing steel shall be in place, cleaned, tied, and adequately supported, in accordance with Section 03200 CONCRETE REINFORCEMENT. Transporting and conveying equipment shall be in-place, ready for use, clean, and free of hardened concrete and foreign material. Equipment for consolidating concrete shall be at the placing site and in proper working order. Equipment and material for curing and for protecting concrete from weather or mechanical damage shall be at the placing site, in proper working condition and in sufficient amount for the entire placement. When hot, windy conditions during concreting appear probable, equipment and material shall be at the placing site to provide windbreaks, shading, fogging, or other action to prevent plastic shrinkage cracking or other damaging drying of the concrete.

3.1.1 Foundations

3.1.1.1 Concrete on Earth Foundations

Earth (subgrade, base, or subbase courses) surfaces upon which concrete is to be placed shall be clean, damp, and free from debris, frost, ice, and standing or running water. Prior to placement of concrete, the foundation shall be well drained and shall be satisfactorily graded and uniformly compacted.

3.1.1.2 Excavated Surfaces in Lieu of Forms

Concrete for footings and walls may be placed directly against the soil provided the earth or rock has been carefully trimmed, is uniform and stable, and meets the compaction requirements of Section 02315 EXCAVATION, FILLING, AND BACKFILLING FOR BUILDINGS. The concrete shall be placed without becoming contaminated by loose material, and the outline of the concrete shall be within the specified tolerances.

3.1.2 Vapor Barrier

Vapor barrier shall be provided beneath the interior on-grade concrete floor slabs. The greatest widths and lengths practicable shall be used to eliminate joints wherever possible. Joints shall be lapped a minimum of 300 mm. Torn, punctured, or damaged vapor barrier material shall be removed and new vapor barrier shall be provided prior to placing concrete. For minor repairs, patches may be made using laps of at least 300 mm. Lapped joints shall be sealed and edges patched with pressure-sensitive adhesive or tape not less than 50 mm wide and compatible with the membrane. Vapor barrier shall be placed directly on underlying subgrade, base course, or capillary water barrier, unless it consists of crushed material or large granular material which could puncture the vapor barrier.

In this case, the surface shall be choked with a light layer of sand, as approved, before placing the vapor barrier. A 50 mm layer of compacted, clean concrete sand (fine aggregate) shall be placed on top of the vapor barrier before placing concrete. Concrete placement shall be controlled so as to prevent damage to the vapor barrier, or any covering sand.

Capillary water barrier shall consist of #057 stone porous fill, thickness as indicated on Drawings, 10 cm minimum.

3.2 CONCRETE PRODUCTION

3.2.1 Batching, Mixing, and Transporting Concrete

3.2.1.1 Stationary Mixers

Concrete plant mixers shall be drum-type mixers of tilting, nontilting, horizontal-shaft, or vertical-shaft type, or shall be pug mill type and shall be provided with an acceptable device to lock the discharge mechanism until the required mixing time has elapsed. The mixing time and uniformity shall conform to all the requirements in ASTM C 94/C 94M applicable to central-mixed concrete.

3.3 PLACING CONCRETE

Mixed concrete shall be discharged within 1-1/2 hours, whichever comes first after the introduction of the mixing water to the cement and aggregates. When the concrete temperature exceeds 30 degrees C, the time shall be reduced to 45 minutes. Concrete shall be placed within 15 minutes after it has been discharged from the transporting unit. Concrete shall be handled from mixer or transporting unit to forms in a continuous manner until the approved unit of operation is completed. Adequate scaffolding, ramps and walkways shall be provided so that personnel and equipment are not supported by in-place reinforcement. Placing will not be permitted when the sun, heat, wind, or limitations of facilities furnished by the Contractor prevent proper consolidation, finishing and curing. Sufficient placing capacity shall be provided so that concrete can be kept free of cold joints.

3.3.1 Depositing Concrete

Concrete shall be deposited as close as possible to its final position in the forms, and there shall be no vertical drop greater than 1.5 meters except where suitable equipment is provided to prevent segregation and where specifically authorized. Depositing of the concrete shall be so regulated that it will be effectively consolidated in horizontal layers not more than 300 mm thick, except that all slabs shall be placed in a single layer. Concrete to receive other construction shall be screeded to the proper level. Concrete shall be deposited continuously in one layer or in layers so that fresh concrete is deposited on in-place concrete that is still plastic. Fresh concrete shall not be deposited on concrete that has hardened sufficiently to cause formation of seams or planes of weakness within the section. Concrete that has surface dried, partially hardened, or contains foreign material shall not be used. When temporary spreaders are used in the forms, the spreaders shall be removed as their service becomes unnecessary. Concrete shall not be placed in slabs over columns and walls until concrete in columns and walls has been in-place at least two hours or until the concrete begins to lose its plasticity. Concrete for beams, girders, brackets, column capitals, haunches, and drop panels shall be placed at the same time as concrete for adjoining slabs.

3.3.2 Consolidation

Immediately after placing, each layer of concrete shall be consolidated by internal vibrators, except for slabs 100 mm thick or less. The vibrators shall at all times be adequate in effectiveness and number to properly consolidate the concrete; a spare vibrator shall be kept at the jobsite during all concrete placing operations. The vibrators shall have a frequency of not less than 10,000 vibrations per minute, an amplitude of at least 0.6 mm, and the head diameter shall be appropriate for the structural member and the concrete mixture being placed. Vibrators shall be inserted vertically at uniform spacing over the area of placement. The distance between insertions shall be approximately 1-1/2 times the radius of action of the vibrator so that the area being vibrated will overlap the adjacent just-vibrated area by a reasonable amount. The vibrator shall penetrate rapidly to the bottom of the layer and at least 150 mm into the preceding layer if there is such. Vibrator shall be held stationary until the concrete is consolidated and then vertically withdrawn slowly while operating. Form vibrators shall not be used unless specifically approved and unless forms are constructed to withstand their use. Vibrators shall not be used to move concrete within the forms. Slabs 100 mm and less in thickness shall be consolidated by properly designed vibrating screeds or other approved technique. Excessive vibration of concrete resulting in segration or flotation of coarse aggregate shall be prevented. Frequency and amplitude of vibrators shall be determined in accordance with COE CRD-C 521. Grate tampers ("jitterbugs") shall not be used.

3.3.3 Cold Weather Requirements

Special protection measures, approved by the Government, shall be used if freezing temperatures are anticipated before the expiration of the specified curing period. The ambient temperature of the air where concrete is to be placed and the temperature of surfaces to receive concrete shall be not less than 5 degrees C. The temperature of the concrete when placed shall be not less than 10 degrees C nor more than 25 degrees C. Heating of the mixing water or aggregates will be required to regulate the concrete placing temperature. Materials entering the mixer shall be free from ice, snow, or frozen lumps. Salt, chemicals or other materials shall not be incorporated in the concrete to prevent freezing. Upon written approval, an accelerating admixture conforming to ASTM C 494/C 494M, Type C or E may be used, provided it contains no calcium chloride. Calcium chloride shall not be used.

3.3.4 Hot Weather Requirements

When the ambient temperature during concrete placing is expected to exceed 30 degrees C, the concrete shall be placed and finished with procedures previously submitted and as specified herein. The concrete temperature at time of delivery to the forms shall not exceed the temperature shown in the table below. Cooling of the mixing water or aggregates or placing concrete in the cooler part of the day may be required to obtain an adequate placing temperature. A retarder may be used, as approved, to facilitate placing and finishing. Steel forms and reinforcements shall be cooled as approved prior to concrete placement when steel temperatures are greater than 49 degrees C. Conveying and placing equipment shall be cooled if necessary to maintain proper concrete-placing temperature.

Maximum Allowable Concrete Placing Temperature

Relative Humidity, Percent, During Time of Concrete Placement	Maximum Allowable Concrete Temperature Degrees
Greater than 60	33 C
40-60	30 C
Less than 40	27 C

3.3.5 Prevention of Plastic Shrinkage Cracking

During hot weather with low humidity, and particularly with appreciable wind, as well as interior placements when space heaters produce low humidity, the Contractor shall be alert to the tendency for plastic shrinkage cracks to develop and shall institute measures to prevent this. Particular care shall be taken if plastic shrinkage cracking is potentially imminent and especially if it has developed during a previous placement. Periods of high potential for plastic shrinkage cracking can be anticipated by use of Fig. 2.1.5 of ACI 305R. In addition the concrete placement shall be further protected by erecting shades and windbreaks and by applying fog sprays of water, sprinkling, ponding or wet covering. Plastic shrinkage cracks that occur shall be filled by injection of epoxy resin as directed, after the concrete hardens. Plastic shrinkage cracks shall never be troweled over or filled with slurry.

3.4 JOINTS

Joints shall be located and constructed as indicated or approved. Joints not indicated on the drawings shall be located and constructed to minimize the impact on the strength of the structure. All reinforcement shall be continued across joints; except that reinforcement or other fixed metal items shall not be continuous through expansion joints, or through construction or control joints in slabs on grade. Reinforcement shall be 50 mm clear from each joint. Except where otherwise indicated, construction joints between interior slabs on grade and vertical surfaces shall consist of 1.5 kg per square meter asphalt-saturated felt, extending for the full depth of the slab. The perimeters of the slabs shall be free of fins, rough edges, spalling, or other unsightly appearance. Reservoir for sealant for construction and control joints in slabs shall be formed to the dimensions shown on the drawings by removing snap-out joint-forming inserts, by sawing sawable inserts, or by sawing to widen the top portion of sawed joints. Joints to be sealed shall be cleaned and sealed as indicated and in accordance with Section 07900 JOINT SEALING.

3.4.1 Control Joints in Slabs on Grade

Control joints shall be located and detailed as shown on the drawings. Control Joints shall be produced by forming a weakened plane in the concrete slab by sawing a continuous slot with a concrete saw. Regardless of method used to produce the weakened plane, it shall be 1/4 the depth of the slab thickness and between 3 and 5 mm wide. For saw-cut joints, cutting shall be timed properly with the set of the concrete. Cutting shall be started as soon as the concrete has hardened sufficiently to prevent ravelling of the edges of the saw cut. Cutting shall be completed before shrinkage stresses become sufficient to produce cracking. Reservoir

for joint sealant shall be formed as previously specified.

3.5 FINISHING UNFORMED SURFACES

The finish of all unformed surfaces shall meet the requirements of paragraph Tolerances in PART 1, when tested as specified herein.

3.5.1 Floated Finish

Slabs to receive more than a rough slab finish shall next be given a wood float finish. Areas to receive terrazzo tile shall be given only a float finish. The screeding shall be followed immediately by darbying or bull floating before bleeding water is present, to bring the surface to a true, even plane. Then, after the concrete has stiffened so that it will withstand a man's weight without imprint of more than 6 mm and the water sheen has disappeared, it shall be floated to a true and even plane free of ridges. Floating shall be performed by use of suitable hand floats or power driven equipment. Sufficient pressure shall be used on the floats to bring a film of moisture to the surface. Hand floats shall be made of wood, magnesium, or aluminum. Concrete that exhibits stickiness shall be floated with a magnesium float. Care shall be taken to prevent over-finishing or incorporating water into the surface.

3.5.2 Troweled Finish

Areas to receive sealer or enamel paint coating shall be given a trowel finish. After floating is complete and after the surface moisture has disappeared, unformed surfaces shall be steel-troweled to a smooth, even, dense finish, free from blemishes including trowel marks. In lieu of hand finishing, an approved power finishing machine may be used in accordance with the directions of the machine manufacturer. Additional trowelings shall be performed, either by hand or machine until the surface has been troweled 2 times, with waiting period between each. Care shall be taken to prevent blistering and if such occurs, troweling shall immediately be stopped and operations and surfaces corrected. A final hard steel troweling shall be done by hand, with the trowel tipped, and using hard pressure, when the surface is at a point that the trowel will produce a ringing sound. The finished surface shall be thoroughly consolidated and shall be essentially free of trowel marks and be uniform in texture and appearance. The concrete mixture used for troweled finished areas shall be adjusted, if necessary, in order to provide sufficient fines (cementitious material and fine sand) to finish properly.

3.6 EXTERIOR SLAB AND RELATED ITEMS

3.6.1 Pavements

Pavements shall be constructed where shown on the drawings. After forms are set and underlying material prepared as specified, the concrete shall be placed uniformly throughout the area and thoroughly vibrated. As soon as placed and vibrated, the concrete shall be struck off and screeded to the crown and cross section and to such elevation above grade that when consolidated and finished, the surface of the pavement will be at the required elevation. The entire surface shall be tamped with the strike off, or consolidated with a vibrating screed, and this operation continued until the required compaction and reduction of internal and surface voids are accomplished. Care shall be taken to prevent bringing excess paste to the surface. Immediately following the final consolidation of the surface, the pavement shall be floated longitudinally from bridges resting on the

side forms and spanning but not touching the concrete. If necessary, additional concrete shall be placed and screeded, and the float operated until a satisfactory surface has been produced. The floating operation shall be advanced not more than half the length of the float and then continued over the new and previously floated surfaces. After finishing is completed but while the concrete is still plastic, minor irregularities and score marks in the pavement surface shall be eliminated by means of long-handled cutting straightedges. Straightedges shall be 3.75 m in length and shall be operated from the sides of the pavement and from bridges. A straightedge operated from the side of the pavement shall be equipped with a handle 1 m longer than one-half the width of the pavement. The surface shall then be tested for trueness with a 3.75 m straightedge held in successive positions parallel and at right angles to the center line of the pavement, and the whole area covered as necessary to detect variations. The straightedge shall be advanced along the pavement in successive stages of not more than one-half the length of the straightedge. Depressions shall be immediately filled with freshly mixed concrete, struck off, consolidated, and refinished. Projections above the required elevation shall also be struck off and refinished. The straightedge testing and finishing shall continue until the entire surface of the concrete is true. Before the surface sheen has disappeared and well before the concrete becomes nonplastic, the surface of the pavement shall be given a nonslip sandy surface texture by use of a burlap drag. A strip of clean, wet burlap from 1.0 to 1.5 m wide and 0.7 m longer than the pavement width shall be carefully pulled across the surface. Edges and joints shall be rounded with an edger having a radius of 3 mm. Curing shall be as specified.

3.6.2 Curbs and Gutters

Concrete shall be formed, placed, and finished by hand using a properly shaped "mule" or constructed using a slipform machine specially designed for this work. Control joints shall be cut 75 mm deep with a jointing tool after the surface has been finished. Expansion joints (12 mm wide) shall be provided at 35 m maximum spacing unless otherwise indicated. Exposed surfaces shall be finished using a stiff bristled brush.

3.6.3 Pits and Trenches

Pits and trenches shall be constructed as indicated on the drawings. Bottoms and walls shall be placed monolithically or waterstops and keys, shall be provided as approved.

3.7 CURING AND PROTECTION

3.7.1 General

Concrete shall be cured by an approved method for the period of time given below:

All concrete	7 days

Immediately after placement, concrete shall be protected from premature drying, extremes in temperatures, rapid temperature change, mechanical injury and damage from rain and flowing water for the duration of the curing period. Air and forms in contact with concrete shall be maintained at a temperature above 10 degrees C for the first 3 days and at a temperature above 0 degrees C for the remainder of the specified curing period. Exhaust fumes from combustion heating units shall be vented to the

outside of the enclosure, and heaters and ducts shall be placed and directed so as not to cause areas of overheating and drying of concrete surfaces or to create fire hazards. Materials and equipment needed for adequate curing and protection shall be available and at the site prior to placing concrete. No fire or excessive heat, including welding, shall be permitted near or in direct contact with the concrete at any time. Moist curing shall be provided for any areas to receive floor hardener, any paint or other applied coating, or to which other concrete is to be bonded. Except for plastic coated burlap, impervious sheeting alone shall not be used for curing.

3.7.2 Moist Curing

Concrete to be moist-cured shall be maintained continuously wet for the entire curing period, commencing immediately after finishing. If water or curing materials used stain or discolor concrete surfaces which are to be permanently exposed, the concrete surfaces shall be cleaned as approved. When wooden forms are left in place during curing, they shall be kept wet at all times. If steel forms are used in hot weather, nonsupporting vertical forms shall be broken loose from the concrete soon after the concrete hardens and curing water continually applied in this void. If the forms are removed before the end of the curing period, curing shall be carried out as on unformed surfaces, using suitable materials. Surfaces shall be cured by ponding, by continuous sprinkling, by continuously saturated burlap or cotton mats, or by continuously saturated plastic coated burlap. Burlap and mats shall be clean and free from any contamination and shall be completely saturated before being placed on the concrete. The Contractor shall have an approved work system to ensure that moist curing is continuous 24 hours per day.

3.7.3 Ponding or Immersion

Concrete shall be continually immersed throughout the curing period. Water shall not be more than 10 degrees C less than the temperature of the concrete.

3.7.4 Cold Weather Curing and Protection

When the daily ambient low temperature is less than 0 degrees C the temperature of the concrete shall be maintained above 5 degrees C for the first seven days after placing. During the period of protection removal, the air temperature adjacent to the concrete surfaces shall be controlled so that concrete near the surface will not be subjected to a temperature differential of more than 13 degrees C as determined by suitable temperature measuring devices furnished by the Contractor, as required, and installed adjacent to the concrete surface and 50 mm inside the surface of the concrete. The installation of the thermometers shall be made by the Contractor as directed.

3.8 SETTING BASE PLATES AND BEARING PLATES

After being properly positioned, column base plates, bearing plates for beams and similar structural members, and machinery and equipment base plates shall be set to the proper line and elevation with damp-pack bedding mortar, except where nonshrink grout is indicated. The thickness of the mortar or grout shall be approximately 1/24 the width of the plate, but not less than 20 mm. Concrete and metal surfaces in contact with grout shall be clean and free of oil and grease, and concrete surfaces in contact with grout shall be damp and free of laitance when grout is placed.

3.8.1 Damp-Pack Bedding Mortar

Damp-pack bedding mortar shall consist of 1 part cement and 2-1/2 parts fine aggregate having water content such that a mass of mortar tightly squeezed in the hand will retain its shape but will crumble when disturbed. The space between the top of the concrete and bottom of the bearing plate or base shall be packed with the bedding mortar by tamping or ramming with a bar or rod until it is completely filled.

3.8.2 Nonshrink Grout

Nonshrink grout shall be a ready-mixed material requiring only the addition of water. Water content shall be the minimum that will provide a flowable mixture and completely fill the space to be grouted without segregation, bleeding, or reduction of strength.

3.8.2.1 Mixing and Placing of Nonshrink Grout

Mixing and placing shall be in conformance with the material manufacturer's instructions and as specified therein. Ingredients shall be thoroughly dry-mixed before adding water. After adding water, the batch shall be mixed for 3 minutes. Batches shall be of size to allow continuous placement of freshly mixed grout. Grout not used within 30 minutes after mixing shall be discarded. The space between the top of the concrete or machinery-bearing surface and the plate shall be filled solid with the grout. Forms shall be of wood or other equally suitable material for completely retaining the grout on all sides and on top and shall be removed after the grout has set. The placed grout shall be carefully worked by rodding or other means to eliminate voids; however, overworking and breakdown of the initial set shall be avoided. Grout shall not be retempered or subjected to vibration from any source. Where clearances are unusually small, placement shall be under pressure with a grout pump. Temperature of the grout, and of surfaces receiving the grout, shall be maintained at 18 to 30 degrees C until after setting.

3.8.2.2 Treatment of Exposed Surfaces

For metal-oxidizing nonshrink grout, exposed surfaces shall be cut back 25 mm and immediately covered with a parge coat of mortar consisting of 1 part portland cement and 2-1/2 parts fine aggregate by weight, with sufficient water to make a plastic mixture. The parge coat shall have a smooth finish. For other mortars or grouts, exposed surfaces shall have a smooth-dense finish and be left untreated. Curing shall comply with paragraph CURING AND PROTECTION.

3.9 TESTING AND INSPECTION FOR CONTRACTOR QUALITY CONTROL

The Contractor shall perform the inspection and tests described below and, based upon the results of these inspections and tests, and shall take the action required. When, in the opinion of the Government, the concreting operation is out of control, concrete placement shall cease and the operation shall be corrected. Materials may be subjected to check testing by the Government from samples obtained at the manufacturer, at transfer points, or at the project site. The Government will inspect the equipment, and test procedures prior to start of concreting operations and subsequently thereafter for conformance.

3.9.1 Concrete Mixture

a. Air Content Testing. Air content tests shall be made when test specimens are fabricated. In addition, at least two tests for air content shall be made on randomly selected batches of each separate concrete mixture produced during each 8-hour period of concrete production. Additional tests shall be made when excessive variation in workability is reported by the placing foreman or Government's inspector. Tests shall be made in accordance with ASTM C 231 for normal weight concrete. Test results shall be recorded and shall at all times be readily available to the Government. Copies of the test results shall be kept in the field by testing crews and recorded as tests are made. When a single test result reaches either the upper or lower action limit, a second test shall immediately be made. The results of the two tests shall be averaged and this average used as the record air content of the batch and for determining need for any remedial action. Samples for air content may be taken at the mixer, however, the Contractor is responsible for delivering the concrete to the placement site at the stipulated air content. If the Contractor's materials or transportation methods cause air content loss between the mixer and the placement, correlation samples shall be taken at the placement site as required by the Government, and the air content at the mixer controlled as directed.

b. Air Content Corrective Action. Whenever air content reaches either upper or lower action limits, an adjustment shall immediately be made in the amount of air-entraining admixture batched. As soon as practical after each adjustment, another test shall be made to verify the result of the adjustment. Whenever air content exceeds action limits, the air content shall be considered out of control and the concreting operation shall immediately be halted until the air content is under control. Additional air content tests shall be made when concreting is restarted.

c. Slump Testing. In addition to slump tests which shall be made when test specimens are fabricated, at least four slump tests shall be made on randomly selected batches in accordance with ASTM C 143/C 143M for each separate concrete mixture produced during each 8-hour or less period of concrete production each day. Also, additional tests shall be made when excessive variation in workability is reported by the placing foreman or Government's inspector. Test results shall be recorded and shall at all times be readily available to the Government. Copies of the test results shall be kept in the field by testing crews and recorded as tests are made. When a single slump test reaches or goes beyond either the upper or lower action limit, a second test shall immediately be made. The results of the two tests shall be averaged and this average used as the record slump of the batch, and for determining need for any remedial action. Samples for slump shall be taken at the mixer. However, the Contractor is responsible for delivering the concrete to the placement site at the stipulated slump. If the Contractor's materials or transportation methods cause slump loss between the mixer and the placement, correlation samples shall be taken at the placement site as required by the Government, and the slump at the mixer controlled as directed.

d. Slump Corrective Action. Whenever slump reaches the upper action limit, an adjustment shall immediately be made in the batch weights of water and fine aggregate. The adjustments are to be made so that the total water content does not exceed that amount allowed by the maximum w/c ratio specified, based on aggregates which are in a saturated surface dry condition. When a single slump reaches the upper or lower action limit, no further concrete shall be delivered to the placing site until proper adjustments have been made. Immediately after each adjustment, another test shall be made to verify the correctness of the adjustment. Whenever two consecutive individual slump tests, made during a period when there was no adjustment of batch weights, produce slump at or above the upper action limit, the concreting operation shall immediately be halted, and the Contractor shall take appropriate steps to bring the slump under control. Additional slump tests shall be made as directed.

3.9.2 Inspection Before Placing

Foundations, construction joints, forms, and embedded items shall be inspected by the Contractor in sufficient time prior to each concrete placement in order to certify to the Government that they are ready to receive concrete. The results of each inspection shall be reported in writing.

3.9.3 Placing

The placing foreman shall supervise placing operations, shall determine that the correct quality of concrete or grout is placed in each location as specified and as directed by the Government, and shall be responsible for measuring and recording concrete temperatures and ambient temperature hourly during placing operations, weather conditions, time of placement, volume placed, and method of placement. The placing foreman shall not permit batching and placing to begin until it has been verified that an adequate number of vibrators in working order and with competent operators are available. Placing shall not be continued if any pile of concrete is inadequately consolidated. If any batch of concrete fails to meet the temperature requirements, immediate steps shall be taken to improve temperature controls.

3.9.4 Curing Inspection

a. Moist Curing Inspections. At least once each shift, and not less than twice per day on both work and non-work days, an inspection shall be made of all areas subject to moist curing. The surface moisture condition shall be noted and recorded.

b. Moist Curing Corrective Action. When a daily inspection report lists an area of inadequate curing, immediate corrective action shall be taken, and the required curing period for those areas shall be extended by 1 day.

e. Sheet Curing Inspection. At least once each shift and once per day on non-work days, an inspection shall be made of all areas being cured using impervious sheets. The condition of the covering and the tightness of the laps and tapes shall be noted and recorded.

f. Sheet Curing Corrective Action. When a daily inspection report lists any tears, holes, or laps or joints that are not completely closed, the tears and holes shall promptly be repaired or the sheets replaced, the joints closed, and the required curing period for those areas shall be extended by 1 day.

3.9.5 Cold-Weather Protection

At least once each shift and once per day on non-work days, an inspection shall be made of all areas subject to cold-weather protection. Any deficiencies shall be noted, corrected, and reported.

3.9.6 Reports

All results of tests or inspections conducted shall be reported informally as they are completed and in writing daily. A weekly report shall be prepared for the updating of control charts covering the entire period from the start of the construction season through the current week. During periods of cold-weather protection, reports of pertinent temperatures shall be made daily. These requirements do not relieve the Contractor of the obligation to report certain failures immediately as required in preceding paragraphs. Such reports of failures and the action taken shall be confirmed in writing in the routine reports. The Government has the right to examine all contractor quality control records.

-- End of Section --

SECTION 03351

PENETRATING LIQUID CONCRETE FLOOR TREATMENT

PART 1 GENERAL

1.1 MATERIAL AUTHENTICATION DATA INCLUDED IN DESIGN ANALYSIS

Government approval is required for submittals with a "G" designation; submittals not having a "G" designation are for information only. When used, a designation following the "G" designation identifies the office that will review the submittal for the Government. The following shall be submitted in accordance with Section 01330 SUBMITTAL PROCEDURES:

SD-03 Product Data; G

Liquid Floor Treatments

Manufacturers descriptive data, catalog cuts, and application instructions

1.2 DELIVERY, STORAGE, AND HANDLING

Store materials in a dry area at a temperature between 4 and 40 degrees C. Provide adequate ventilation and keep away from ignition sources.

PART 2 PRODUCTS

2.1 FLOOR AND SLAB TREATMENTS

2.1.1 Liquid Floor Treatments

Clear, penetrating, chemically reactive, waterborne solution of inorganic silicate or siliconate materials and proprietary components; odorless; colorless; that penetrates, hardens, and densifies concrete surfaces.

PART 3 EXECUTION

3.1 EXAMINATION

Examine areas and conditions, with Applicator present, for compliance with requirements for existing coatings and treatments, including curing compounds, and other conditions affecting performance of work.

3.1.1 Suitability and Compatibility

Verify suitability of substrates, including compatibility with existing finishes, coatings, or treatments.

3.1.2 Unsatisfactory Conditions

Begin application only after unsatisfactory conditions have been corrected and surfaces are dry.

3.1.3 Acceptance

Application indicates acceptance of surfaces and conditions.

3.2 PREPARATION AND APPLICATION

Prepare, apply, and finish penetrating liquid floor treatment according to manufacturer's written instructions.

3.2.1 Preparation

Remove curing compounds, sealers, oil, dirt, laitance, and other contaminants and complete surface repairs.

3.2.2 Substrate Conditions

Do not apply to concrete that is less than 28 days old.

3.2.3 Application

Apply liquid until surface is saturated, scrubbing into surface until a gel forms; rewet; and repeat brooming or scrubbing. Rinse with water; remove excess material until surface is dry. Apply a second coat in a similar manner if surface is rough or porous.

3.2.4 Sealing Coat

Uniformly apply a continuous sealing coat of liquid according to manufacturer's written instructions, immediately prior to substantial completion.

-- End of Section --

SECTION 04200

MASONRY

PART 1 GENERAL

1.1 REFERENCES

The publications listed below form a part of this specification to the extent referenced. The publications are referred to within the text by basic designation only.

ACI INTERNATIONAL (ACI)

ACI 530	(1999) Building Code Requirements for Masonry Structures
ACI 530.1	(1999) Specifications for Masonry Structures and Related Commentaries
ACI SP-66	(1994) ACI Detailing Manual

AMERICAN SOCIETY OF CIVIL ENGINEERS (ASCE)

ASCE 5	(1999) Building Code Requirements for Masonry Structures

ASTM INTERNATIONAL (ASTM)

ASTM A 615/A 615M	(2001b) Deformed and Plain Billet-Steel Bars for Concrete Reinforcement
ASTM C 90	(2002) Loadbearing Concrete Masonry Units
ASTM C 270	(2001a) Mortar for Unit Masonry
ASTM C 476	(2001) Grout for Masonry
ASTM C 494/C 494M	(1999ae1) Chemical Admixtures for Concrete
ASTM C 780	(2000) Preconstruction and Construction Evaluation of Mortars for Plain and Reinforced Unit Masonry
ASTM C 1019	(2000b) Sampling and Testing Grout

1.2 SUBMITTALS

Government approval is required for submittals with a "G" designation; submittals not having a "G" designation are for information only. When used, a designation following the "G" designation identifies the office that will review the submittal for the Government. Submit the following in accordance with Section 01330 SUBMITTAL PROCEDURES:

SD-02 Shop Drawings

Structural Masonry; G AED

Drawings including plans, elevations, and details of wall reinforcement; details of reinforcing bars at corners and wall intersections; offsets; tops, bottoms, and ends of walls; control and expansion joints; lintels; and wall openings. Bar splice locations shall be shown. If the Contractor opts to furnish inch-pound CMU products, drawings showing elevation of walls exposed to view and indicating the location of all cut CMU products shall be submitted for approval. Bent bars shall be identified on a bending diagram and shall be referenced and located on the drawings. Wall dimensions, bar clearances, and wall openings greater than one masonry unit in area shall be shown. No approval will be given to the shop drawings until the Contractor certifies that all openings, including those for mechanical and electrical service, are shown. If, during construction, additional masonry openings are required, the approved shop drawings shall be resubmitted with the additional openings shown along with the proposed changes. Location of these additional openings shall be clearly highlighted. The minimum scale for wall elevations shall be 1 to 50. Reinforcement bending details shall conform to the requirements of ACI SP-66.

SD-03 Product Data

Local/Regional Materials; (LEED)

Documentation indicating distance between manufacturing facility and the project site. Indicate distance of raw material origin from the project site. Indicate relative dollar value of local/regional materials to total dollar value of products included in project.

Environmental Data
Concrete Masonry Units (CMU); G AED
Cement; G AED
Insulation; G AED
Flashing; G AED
Water-Repellant Admixture; G AED

Manufacturer's descriptive data. Documentation indicating percentage of post-industrial and post-consumer recycled content per unit of product. Indicate relative dollar value of recycled content products to total dollar value of products included in project.

Cold Weather Installation; G AED

Cold weather construction procedures.

SD-04 Samples

Concrete Masonry Units (CMU); G AED

Color samples of three stretcher units and one unit for each type of special shape. Units shall show the full range of color and texture. Submit sample of colored mortar with applicable masonry unit.

Anchors, Ties, and Bar Positioners; G AED

Two of each type used.

Expansion-Joint Materials; G AED

One piece of each type used.

Joint Reinforcement; G AED

One piece of each type used, including corner and wall intersection pieces, showing at least two cross wires.

SD-05 Design Data

Pre-mixed Mortar; G AED
Unit Strength Method; G AED

Pre-mixed mortar composition. Calculations and certifications of masonry unit and mortar strength.

SD-06 Test Reports

Field Testing of Mortar; G AED
Field Testing of Grout; G AED
Masonry Cement; G AED
Fire-rated CMU; G AED

Test reports from an approved independent laboratory. Test reports on a previously tested material shall be certified as the same as that proposed for use in this project.

SD-07 Certificates

Concrete Masonry Units (CMU)
Control Joint Keys
Anchors, Ties, and Bar Positioners
Expansion-Joint Materials
Joint Reinforcement
Reinforcing Steel Bars and Rods
Masonry Cement
Precast Concrete Items

Certificates of compliance stating that the materials meet the specified requirements.

Insulation

Certificate attesting that the polyurethane or polyisocyanurate insulation furnished for the project contains recovered material, and showing an estimated percent of such recovered material.

Contamination

SD-08 Manufacturer's Instructions

Masonry Cement; G AED

When masonry cement is used, submit the manufacturer's printed

instructions on proportions of water and aggregates and on mixing to obtain the type of mortar required.

1.3 DELIVERY, HANDLING, AND STORAGE

Materials shall be delivered, handled, stored, and protected to avoid chipping, breakage, and contact with soil or contaminating material.

1.3.1 Masonry Units

Masonry units shall be covered or protected from inclement weather. Store Type II, masonry units at the site for a minimum of 28 days for air cured units, 10 days for atmospheric steam or water cured units, and 3 days for units cured with steam at a pressure of 800 to 1000 kPa and at a temperature of 180 to 185 degrees C for at least 5 hours. Protect moisture controlled Type I units from rain and ground water.

1.3.2 Cementitious Materials, Sand and Aggregates

Cementitious and other packaged materials shall be delivered in unopened containers, plainly marked and labeled with manufacturers' names and brands. Cementitious material shall be stored in dry, weathertight enclosures or be completely covered. Cement shall be handled in a manner that will prevent the inclusion of foreign materials and damage by water or dampness. Sand and aggregates shall be stored in a manner to prevent contamination or segregation.

1.4 STRUCTURAL MASONRY

1.4.1 Unit Strength Method

Compute compressive strength of masonry system "Unit Strength Method," ACI 530.1. Submit calculations and certifications of unit and mortar strength.

Masonry wall assembly shall have a compressive strength of not less than 140 kg/sq. cm.

1.4.2 Design Requirments

Design criteria shall include requirements of TM5-809-3(working stress). Seismic Load shall be based on the Internaional Building Code (2000)using spectral Ordinates SS=1.65g, S1=0.75g, Group I, Site Class D and Importance factor I=1.0

PART 2 PRODUCTS

2.1 CONCRETE MASONRY UNITS (CMU)

Cement shall have a low alkali content and be of one brand. Units shall be of modular dimensions and air, water, or steam cured. Surfaces of units which are to be plastered shall be sufficiently rough to provide bond; exposed surfaces of units shall be smooth and of uniform texture.

a. Hollow Load-Bearing Units: Meeting ACI 530, ASCE 5, or ASTM C 90, made with normal weight aggregate. Provide load-bearing units for exterior walls, foundation walls, load-bearing walls, and shear walls.

2.2 PRECAST CONCRETE ITEMS

2.2.1 Splash Blocks

Splash blocks shall be as detailed. Reinforcement shall be the manufacturer's standard.

2.3 MORTAR FOR STRUCTURAL MASONRY

ASTM C 270, Type S. Compressive Strength 130 kg/sq. cm minimum. Use ASTM C 150 Type I or II portland cement. Do not use admixtures containing chlorides. When structural reinforcement is incorporated, maximum air-content shall be 12 percent in cement-lime mortar mortar.

2.4 GROUT AND READY-MIXED GROUT

Grout shall conform to ASTM C 476 coarse. Cement used in grout shall have a low alkali content. Grout slump shall be between 200 and 250 mm. Minimum grout strength shall be 14 MPa in 28 days, as tested by ASTM C 1019. Grout shall be used subject to the limitations of Table III. Proportions shall not be changed and materials with different physical or chemical characteristics shall not be used in grout for the work unless additional evidence is furnished that the grout meets the specified requirements.

2.4.1 Admixtures for Grout

In cold weather, a non-chloride based accelerating admixture may be used subject to approval; accelerating admixture shall be non-corrosive, shall contain less than 0.2 percent chlorides, and shall conform to ASTM C 494/C 494M, Type C. In general, air-entrainment, anti-freeze or chloride admixtures shall not be used except as approved by the Government.

2.4.2 Grout Barriers

Grout barriers for vertical cores shall consist of fine mesh wire, fiberglass, or expanded metal.

2.5 Reinforcement

Reinforcing steel bar and rods shall conforn to ASTM A 615 grade 60. Joint reinforcement: Standard 9 gauge minimum, Ladder Type.

2.6 EXPANSION AND CONTROL JOINTS

General: Install control and expansion-joint materials in unit masonry as masonry progresses. Do not allow materials to span control and expansion joints without provision to allow for in-plane wall or partition movement.

Install expansion board as indicated at control joints on Drawings, provide asphalt impregnated fiberboard and sealing compound. Install as indicated on Drawings.

2.7 REINFORCING STEEL BARS AND RODS

Reinforcing steel bars and rods shall conform to ASTM A 615/A 615M, Grade 60.

2.8 FLASHING

Flashing shall be as specified in Section 07600 SHEET METALWORK, GENERAL. Material shall be one which is not adversely affected by dampproofing material.

PART 3 EXECUTION

3.1 PREPARATION

Prior to start of work, masonry inspector shall verify the applicable conditions as set forth in ACI 530.1 inspection. The Government will serve as inspector or will select a masonry inspector.

3.1.1 Hot Weather Installation

The following precautions shall be taken if masonry is erected when the ambient air temperature is more than 37 degrees C in the shade and the relative humidity is less than 50 percent or the ambient air temperature exceeds 32 degrees C and the wind velocity is more than 13 km/h . All masonry materials shall be shaded from direct sunlight; mortar beds shall be spread no more than 1.2 m ahead of masonry; masonry units shall be set within one minute of spreading mortar; and after erection, masonry shall be protected from direct exposure to wind and sun for 48 hours.

3.1.2 Cold Weather Installation

Before erecting masonry when ambient temperature or mean daily air temperature falls below 4 degrees C or temperature of masonry units is below 4 degrees C , a written statement of proposed cold weather construction procedures shall be submitted for approval. The following precautions shall be taken during all cold weather erection.

3.1.2.1 Protection

Ice or snow formed on the masonry bed shall be thawed by the application of heat. Heat shall be applied carefully until the top surface of the masonry is dry to the touch. Sections of masonry deemed frozen and damaged shall be removed before continuing construction of those sections.

a. Air Temperature 4 to 0 degrees C. Sand or mixing water shall be heated to produce mortar temperatures between 4 and 49 degrees C.

b. Air Temperature 0 to minus 4 degrees C . Sand and mixing water shall be heated to produce mortar temperatures between 4 and 49 degrees C. Temperature of mortar on boards shall be maintained above freezing.

c. Air Temperature minus 4 to minus 7 degrees C. Sand and mixing water shall be heated to provide mortar temperatures between 4 and 49 degrees C. Temperature of mortar on boards shall be maintained above freezing. Sources of heat shall be used on both sides of walls under construction. Windbreaks shall be employed when wind is in excess of 24 km/hour .

d. Air Temperature minus 7 degrees C and below. Sand and mixing water shall be heated to provide mortar temperatures between 4 and 49 degrees C. Enclosure and auxiliary heat shall be provided to maintain air temperature above 0 degrees C. Temperature of units

when laid shall not be less than minus 7 degrees C.

3.1.2.2 Completed Masonry and Masonry Not Being Worked On

a. Mean daily air temperature 4 to 0 degrees C . Masonry shall be protected from rain or snow for 24 hours by covering with weather-resistive membrane.

b. Mean daily air temperature 0 to minus 4 degrees C . Masonry shall be completely covered with weather-resistant membrane for 24 hours.

c. Mean Daily Air Temperature minus 4 to minus 7 degrees C . Masonry shall be completely covered with insulating blankets or equally protected for 24 hours.

3.1.3 Stains

Protect exposed surfaces from mortar and other stains. When mortar joints are tooled, remove mortar from exposed surfaces with fiber brushes and wooden paddles. Protect base of walls from splash stains by covering adjacent ground with sand, sawdust, or polyethylene.

3.1.4 Loads

Do not apply uniform loads for at least 12 hours or concentrated loads for at least 72 hours after masonry is constructed. Provide temporary bracing as required.

3.1.5 Surfaces

Surfaces on which masonry is to be placed shall be cleaned of laitance, dust, dirt, oil, organic matter, or other foreign materials and shall be slightly roughened to provide a surface texture with a depth of at least 3 mm . Sandblasting shall be used, if necessary, to remove laitance from pores and to expose the aggregate.

3.2 LAYING MASONRY UNITS

Coordinate masonry work with the work of other trades to accommodate built-in items and to avoid cutting and patching. Masonry units shall be laid in running bond pattern. Facing courses shall be level with back-up courses, unless the use of adjustable ties has been approved in which case the tolerances shall be plus or minus 13 mm . Each unit shall be adjusted to its final position while mortar is still soft and plastic. Units that have been disturbed after the mortar has stiffened shall be removed, cleaned, and relaid with fresh mortar. Air spaces, cavities, chases, expansion joints, and spaces to be grouted shall be kept free from mortar and other debris. Units used in exposed masonry surfaces shall be selected from those having the least amount of chipped edges or other imperfections detracting from the appearance of the finished work. Vertical joints shall be kept plumb. Units being laid and surfaces to receive units shall be free of water film and frost. Solid units shall be laid in a nonfurrowed full bed of mortar. Units shall be shoved into place so that the vertical joints are tight. Vertical joints of block and the vertical face shells of concrete masonry units, except where indicated at control, expansion, and isolation joints, shall be completely filled with mortar. Mortar will be permitted to protrude up to 13 mm into the space or cells to be grouted. Means shall be provided to prevent mortar from dropping into the space below.

3.2.1 Reinforced Concrete Masonry Units Walls

Where vertical reinforcement occurs, fill cores solid with grout. Lay units in such a manner as to preserve the unobstructed vertical continuity of cores to be filled. Embed the adjacent webs in mortar to prevent leakage of grout. Remove mortar fins protruding from joints before placing grout. Minimum clear dimensions of vertical cores shall be 50 by 75 mm. Position reinforcing accurately as indicated before placing grout. As masonry work progresses, secure vertical reinforcing in place at vertical intervals not to exceed 160 bar diameters. Use puddling rod or vibrator to consolidate the grout. Minimum clear distance between masonry and vertical reinforcement shall be not less than 12 mm. Unless indicated or specified otherwise, form splices by lapping bars not less than 40 bar diameters and wire tying them together.

3.2.2 Concrete Masonry Units

Units in piers, pilasters, columns, starting courses on footings, solid foundation walls, lintels, and beams, and where cells are to be filled with grout shall be full bedded in mortar under both face shells and webs. Other units shall be full bedded under both face shells. Head joints shall be filled solidly with mortar for a distance in from the face of the unit not less than the thickness of the face shell. Jamb units shall be of the shapes and sizes to conform with wall units. Solid units may be incorporated in the masonry work where necessary to fill out at corners, gable slopes, and elsewhere as approved.

3.2.3 Tolerances

Masonry shall be laid plumb, true to line, with courses level. Bond pattern shall be kept plumb throughout. Corners shall be square unless noted otherwise. Except for walls constructed of prefaced concrete masonry units, masonry shall be laid within the following tolerances (plus or minus unless otherwise noted):

TABLE II

TOLERANCES

Variation from the plumb in the lines and surfaces of columns, walls and arises	
In adjacent masonry units	3 mm
In 3 m	6 mm
In 6 m	10 mm
In 12 m or more	13 mm
Variations from the plumb for external corners, expansion joints, and other conspicuous lines	
In 6 m	6 mm
In 12 m or more	13 mm
Variations from the level for exposed lintels, sills, parapets, horizontal grooves, and other conspicuous lines	

TOLERANCES

In 6 m	6 mm
In 12 m or more	13 mm
Variation from level for bed joints and top surfaces of bearing walls	
In 3 m	6 mm
In 12 m or more	13 mm
Variations from horizontal lines	
In 3 m	6 mm
In 6 m	10 mm
In 12 m or more	13 mm
Variations in cross sectional dimensions of columns and in thickness of walls	
Minus	6 mm
Plus	13 mm

3.2.4 Cutting and Fitting

Full units of the proper size shall be used wherever possible, in lieu of cut units. Cutting and fitting, including that required to accommodate the work of others, shall be done by masonry mechanics using power masonry saws. Concrete masonry units may be wet or dry cut. Wet cut units, before being placed in the work, shall be dried to the same surface-dry appearance as uncut units being laid in the wall. Cut edges shall be clean, true and sharp. Openings in the masonry shall be made carefully so that wall plates, cover plates or escutcheons required by the installation will completely conceal the openings and will have bottoms parallel with the masonry bed joints.

Do not cut masonry unit face shells, grout, and mortar joints, and reinforced concrete bond beams in the field to facilitate placement of electrical conduit, J-boxes, plumbing or other non structural items. Building wall penetrations shall be carefully made so as not to reduce the structural integrity of the wall system in any way.

3.2.5 Jointing

Joints shall be tooled when the mortar is thumbprint hard. Horizontal joints shall be tooled last. Joints shall be brushed to remove all loose and excess mortar. Mortar joints shall be finished as follows:

3.2.5.1 Tooled Joints

Joints in exposed exterior and interior masonry surfaces shall be tooled slightly concave. Joints shall be tooled with a jointer slightly larger than the joint width so that complete contact is made along the edges of the unit. Tooling shall be performed so that the mortar is compressed and

the joint surface is sealed. Jointer of sufficient length shall be used to obtain a straight and true mortar joint.

3.2.5.2 Door and Window Frame Joints

On the exposed interior side of exterior frames, joints between frames and abutting masonry walls shall be raked to a depth of 10 mm . On the exterior side of exterior frames, joints between frames and abutting masonry walls shall be raked to a depth of 10 mm .

3.2.6 Joint Widths

Joint widths shall be as follows:

3.2.6.1 Concrete Masonry Units

Concrete masonry units shall have 9 mm joints.

3.2.7 Embedded Items

Spaces around built-in items shall be filled with mortar. Openings around flush-mount electrical outlet boxes in wet locations shall be pointed with mortar. Anchors, ties, wall plugs, accessories, flashing, pipe sleeves and other items required to be built-in shall be embedded as the masonry work progresses. Anchors, ties and joint reinforcement shall be fully embedded in the mortar. Cells receiving anchor bolts and cells of the first course below bearing plates shall be filled with grout.

3.2.8 Unfinished Work

Unfinished work shall be stepped back for joining with new work. Toothing may be resorted to only when specifically approved. Loose mortar shall be removed and the exposed joints shall be thoroughly cleaned before laying new work.

3.2.9 Masonry Wall Intersections

Each course shall be masonry bonded at corners and elsewhere as shown. Masonry walls shall be anchored or tied together at corners and intersections with bond beam reinforcement and prefabricated corner or tee pieces of joint reinforcement as shown.

3.2.10 Partitions

Partitions shall be continuous from floor to underside of floor or roof deck where shown. Openings in firewalls around joists or other structural members shall be filled as indicated or approved. Where suspended ceilings on both sides of partitions are indicated, the partitions other than those shown to be continuous may be stopped approximately 100 mm above the ceiling level. An isolation joint shall be placed in the intersection between partitions and structural or exterior walls as shown. Interior partitions having 100 mm nominal thick units shall be tied to intersecting partitions of 100 mm units. Cells within vertical plane of ties shall be filled solid with grout for full height of partition or solid masonry units may be used. Interior partitions having masonry walls over 100 mm thick shall be tied together with joint reinforcement. Partitions containing joint reinforcement shall be provided with prefabricated pieces at corners and intersections or partitions.

3.3 MORTAR

Mortar shall be mixed in a mechanically operated mortar mixer for at least 3 minutes, but not more than 5 minutes. Measurement of ingredients for mortar shall be by volume. Ingredients not in containers, such as sand, shall be accurately measured by the use of measuring boxes. Water shall be mixed with the dry ingredients in sufficient amount to provide a workable mixture which will adhere to the vertical surfaces of masonry units. Mortar that has stiffened because of loss of water through evaporation shall be retempered by adding water to restore the proper consistency and workability. Mortar that has reached its initial set or that has not been used within 2-1/2 hours after mixing shall be discarded.

3.4 REINFORCING STEEL

Reinforcement shall be cleaned of loose, flaky rust, scale, grease, mortar, grout, or other coating which might destroy or reduce its bond prior to placing grout. Bars with kinks or bends not shown on the drawings shall not be used. Reinforcement shall be placed prior to grouting. Unless otherwise indicated, vertical wall reinforcement shall extend to within 50 mm of tops of walls.

3.4.1 Positioning Bars

Vertical bars shall be accurately placed within the cells at the positions indicated on the drawings. A minimum clearance of 13 mm shall be maintained between the bars and masonry units. Minimum clearance between parallel bars shall be one diameter of the reinforcement. Vertical reinforcing may be held in place using bar positioners located near the ends of each bar and at intermediate intervals of not more than 192 diameters of the reinforcement. Column and pilaster ties shall be wired in position around the vertical steel. Ties shall be in contact with the vertical reinforcement and shall not be placed in horizontal bed joints.

3.4.2 Splices

Bars shall be lapped a minimum of 48 diameters of the reinforcement. Welded or mechanical connections shall develop at least 125 percent of the specified yield strength of the reinforcement.

3.5 PLACING GROUT

Cells containing reinforcing bars shall be filled with grout. Hollow masonry units in walls or partitions supporting plumbing, heating, or other mechanical fixtures, voids at door and window jambs, and other indicated spaces shall be filled solid with grout. Cells under lintel bearings on each side of openings shall be filled solid with grout for full height of openings. Lintels and bond beams shall be filled solid with grout. Units other than open end units may require grouting each course to preclude voids in the units. Grout not in place within 1-1/2 hours after water is first added to the batch shall be discarded. Sufficient time shall be allowed between grout lifts to preclude displacement or cracking of face shells of masonry units. If blowouts, flowouts, misalignment, or cracking of face shells should occur during construction, the wall shall be torn down and rebuilt.

3.5.1 Grout Holes and Cleanouts

3.5.1.1 Grout Holes

Grouting holes shall be provided in spandrel beams, and other in-place overhead construction. Holes shall be located over vertical reinforcing bars or as required to facilitate grout fill in bond beams. Additional openings spaced not more than 400 mm on centers shall be provided where grouting of all hollow unit masonry is indicated. Openings shall not be less than 100 mm in diameter or 75 by 100 mm in horizontal dimensions. Upon completion of grouting operations, grouting holes shall be plugged and finished to match surrounding surfaces.

3.5.1.2 Cleanouts for Hollow Unit Masonry Construction

Cleanout holes shall be provided at the bottom of every pour in cores containing vertical reinforcement when the height of the grout pour exceeds 1.5 m . Where all cells are to be grouted, cleanout courses shall be constructed using bond beam units in an inverted position to permit cleaning of all cells. Cleanout holes shall be provided at a maximum spacing of 800 mm where all cells are to be filled with grout. A new series of cleanouts shall be established if grouting operations are stopped for more than 4 hours. Cleanouts shall not be less than 75 by 100 mm openings cut from one face shell. Manufacturer's standard cutout units may be used at the Contractor's option. Cleanout holes shall not be closed until masonry work, reinforcement, and final cleaning of the grout spaces have been completed and inspected. For walls which will be exposed to view, cleanout holes shall be closed in an approved manner to match surrounding masonry.

3.5.2 Grouting Equipment

3.5.2.1 Grout Pumps

Pumping through aluminum tubes will not be permitted. Pumps shall be operated to produce a continuous stream of grout without air pockets, segregation, or contamination. Upon completion of each day's pumping, waste materials and debris shall be removed from the equipment, and disposed of outside the masonry.

3.5.3 Grout Placement

Masonry shall be laid to the top of a pour before placing grout. Grout shall not be placed in hollow unit masonry until mortar joints have set for at least 24 hours. Grout shall be placed using a hand bucket, concrete hopper, or grout pump to completely fill the grout spaces without segregation of the aggregates. The height of grout pours and type of grout used shall be limited by the dimensions of grout spaces as indicated in Table III. Low-lift grout methods may be used on pours up to and including 1.5 m in height. High-lift grout methods shall be used on pours exceeding 1.5 m in height.

3.5.3.1 Low-Lift Method

Grout shall be placed at a rate that will not cause displacement of the masonry due to hydrostatic pressure of the grout. Mortar protruding more than 13 mm into the grout space shall be removed before beginning the grouting operation. Grout pours 300 mm or less in height shall be consolidated by mechanical vibration or by puddling. Grout pours over 300

mm in height shall be consolidated by mechanical vibration and reconsolidated by mechanical vibration after initial water loss and settlement has occurred. Low-lift grout shall be used subject to the limitations of Table III.

3.5.3.2 High-Lift Method

Mortar droppings shall be cleaned from the bottom of the grout space and from reinforcing steel. Mortar protruding more than 6 mm into the grout space shall be removed by dislodging the projections with a rod or stick as the work progresses. Reinforcing, bolts, and embedded connections shall be rigidly held in position before grouting is started. CMU units shall not be pre-wetted. Grout, from the mixer to the point of deposit in the grout space shall be placed as rapidly as practical by pumping and placing methods which will prevent segregation of the mix and cause a minimum of grout splatter on reinforcing and masonry surfaces not being immediately encased in the grout lift. The individual lifts of grout shall be limited to 1.2 m in height. The first lift of grout shall be placed to a uniform height within the pour section and vibrated thoroughly to fill all voids. This first vibration shall follow immediately behind the pouring of the grout using an approved mechanical vibrator. After a waiting period sufficient to permit the grout to become plastic, but before it has taken any set, the succeeding lift shall be poured and vibrated 300 to 450 mm into the preceding lift. If the placing of the succeeding lift is going to be delayed beyond the period of workability of the preceding, each lift shall be reconsolidated by reworking with a second vibrator as soon as the grout has taken its settlement shrinkage. The waiting, pouring, and reconsolidation steps shall be repeated until the top of the pour is reached. The top lift shall be reconsolidated after the required waiting period. The high-lift grouting of any section of wall between vertical grout barriers shall be completed to the top of a pour in one working day unless a new series of cleanout holes is established and the resulting horizontal construction joint cleaned.

TABLE III

POUR HEIGHT AND TYPE OF GROUT FOR VARIOUS GROUT SPACE DIMENSIONS

Maximum Grout Pour Height (m) (4)	Grout Type	Grouting Procedure	Minimum Dimensions of the Total Clear Areas Within Grout Spaces and Cells (mm) (1,2) Multiwythe Masonry (3)	Hollow-unit Masonry
0.3	Fine	Low Lift	20	40 x 50
1.5	Fine	Low Lift	50	50 x 75
2.4	Fine	High Lift	50	50 x 75
3.6	Fine	High Lift	65	65 x 75
7.3	Fine	High Lift	75	75 x 75
0.3	Coarse	Low Lift	40	40 x 75
1.5	Coarse	Low Lift	50	65 x 75
2.4	Coarse	High Lift	50	75 x 75
3.6	Coarse	High Lift	65	75 x 75
7.3	Coarse	High Lift	75	75 x 100

Notes:

(1) The actual grout space or cell dimension must be larger than the

sum of the following items:
a) The required minimum dimensions of total clear areas given in the table above;
b) The width of any mortar projections within the space;
c) The horizontal projections of the diameters of the horizontal reinforcing bars within a cross section of the grout space or cell.

(2) The minimum dimensions of the total clear areas shall be made up of one or more open areas, with at least one area being 20 mm or greater in width.

(3) For grouting spaces between masonry wythes.

(4) Where only cells of hollow masonry units containing reinforcement are grouted, the maximum height of the pour shall not exceed the distance between horizontal bond beams.

3.6 POINTING AND CLEANING

After mortar joints have attained their initial set, but prior to hardening, mortar and grout daubs or splashings shall be completely removed from masonry-unit surfaces that will be exposed or painted. Before completion of the work, defects in joints of masonry to be exposed or painted shall be raked out as necessary, filled with mortar, and tooled to match existing joints. Immediately after grout work is completed, scum and stains which have percolated through the masonry work shall be removed using a high pressure stream of water and a stiff bristled brush. Masonry surfaces shall not be cleaned, other than removing excess surface mortar, until mortar in joints has hardened. Masonry surfaces shall be left clean, free of mortar daubs, dirt, stain, and discoloration, including scum from cleaning operations, and with tight mortar joints throughout. Metal tools and metal brushes shall not be used for cleaning.

3.6.1 Concrete Masonry Unit

Exposed concrete masonry unit shall be dry-brushed at the end of each day's work and after any required pointing, using stiff-fiber bristled brushes.

3.7 BEARING PLATES

Bearing plates for beams, joists, and similar structural members shall be set to the proper line and elevation with damp-pack bedding mortar, except where non-shrink grout is indicated. Bedding mortar and non-shrink grout shall be as specified in Section 03300 CAST-IN-PLACE STRUCTURAL CONCRETE.

3.8 PROTECTION

Top of unfinished walls shall be covered with nonstaining waterproof covering or membrane during adverse weather conditions (rain or snow) when work is not in progress. Covering shall extend a minimum of 600 mm down on each side of the wall and shall be held securely in place. Before starting or resuming, top surface of masonry in place shall be cleaned of loose mortar and foreign material.

3.9 MORTAR AND GROUT TESTS

3.9.1 Field Testing of Mortar

At least three specimens of mortar shall be taken each day. A layer of mortar 13 to 16 mm thick shall be spread on the masonry units and allowed to stand for one minute. The specimens shall then be prepared and tested for compressive strength in accordance with ASTM C 780.

3.9.2 Field Testing of Grout

Field sampling and testing of grout shall be in accordance with the applicable provisions of ASTM C 1019. A minimum of three specimens of grout per day shall be sampled and tested. Each specimen shall have a minimum ultimate compressive strength of 14.0 MPa at 28 days.

-- End of Section --

SECTION 05120

STRUCTURAL STEEL

PART 1 GENERAL

1.1 REFERENCES

The publications listed below form a part of this specification to the extent referenced. The publications are referred to in the text by the basic designation only.

AMERICAN INSTITUTE OF STEEL CONSTRUCTION (AISC)

AISC 316	(1989) ASD Manual of Steel Construction
AISC 317	(1992; Errata 1994) Connections
AISC 303	(2000) Code of Standard Practice for Steel Buildings and Bridges
AISC 348	(2003) Specification for Structural Joints Using ASTM A325 or A490 Bolts
AISC 335	(1989) Structural Steel Buildings Allowable Stress Design, and Plastic Design
AISC S340	(1992) Metric Properties of Structural Shapes with Dimensions According to ASTM A6M

ASTM INTERNATIONAL (ASTM)

ASTM A 36/A 36M	(2000a) Carbon Structural Steel
ASTM A 53	(1996) Pipe, Steel, Black and Hot-Dipped, Zinc-Coated Welded and Seamless
ASTM A 307	(2002) Carbon Steel Bolts and Studs, 60 000 PSI Tensile Strength
ASTM A 325M	(2002) Specification for High-Strength Bolts for Structural Steel Joints (Metric)
ASTM A 325	(2000) Structural Bolts, Steel, Heat Treated, 120/105 ksi Minimum Tensile Strength
ASTM A 490M	(2000) High-Strength Steel Bolts, Classes 10.9 and 10.9.3, for Structural Steel Joints (Metric)
ASTM A 563M	(2001) Specification for Carbon and Alloy Steel Nuts (Metric)
ASTM A 563	(1997) Carbon and Alloy Steel Nuts

ASTM C 827	(1995; R 1997) Change in Height at Early Ages of Cylindrical Specimens from Cementitious Mixtures
ASTM C 1107	(2002) Specification for Packaged Dry, Hydraulic-Cement Grout (Nonshrink)
ASTM F 436M	(2000) Hardened Steel Washers (Metric)
ASTM F 844	(2000) Washers, Steel, Plain (Flat), Unhardened for General Use

AMERICAN WELDING SOCIETY (AWS)

AWS D1.1/D1.1M	(1998) Structural Welding Code - Steel

1.2 SYSTEM DESCRIPTION

Provide the structural steel system, including shop primer, complete and ready for use. Structural steel systems including design, materials, installation, workmanship, fabrication, assembly, erection, inspection, quality control, and testing shall be provided in accordance with AISC 316 and AISC 317 except as modified in this contract.

1.3 MODIFICATIONS TO REFERENCES

In AISC 316, AISC 317, AISC 335, AISC 303, AISC 348, and AISC S340, except as modified in this section, shall be considered a part of AISC 316 and AISC 317 and is referred to in this section as AISC 316 and AISC 317.

1.4 SUBMITTALS

Government approval is required for submittals with a "G" designation; submittals not having a "G" designation are for information only. When used, a designation following the "G" designation identifies the office that will review the submittal for the Government. Submit the following in accordance with Section 01330 SUBMITTAL PROCEDURES:

SD-02 Shop Drawings

Erection Plan, including description of temporary supports; G AED

Fabrication drawings including description of connections; G AED

SD-03 Product Data

Shop primer

SD-06 Test Reports

Bolts, nuts, and washers

Supply the certified manufacturer's mill reports which clearly show the applicable ASTM mechanical and chemical requirements together with the actual test results for the supplied fasteners.

SD-07 Certificates

Steel

Bolts, nuts, and washers

Welding procedures and qualifications

PART 2 PRODUCTS

2.1 STEEL

2.1.1 Structural Steel

ASTM A 36/A 36M or general purpose structural grade, with minimum yield strength of 240 MPa. Provide A36, S.T. 37-2 steel, or equal.

2.1.2 Steel Pipe

ASTM A 53, Type E or S, Grade B; Electric resistance welded or seamless per DIN, BS, AISC, or EN standards, with minimum yield strength of 245 MPa.

2.2 BOLTS, NUTS, AND WASHERS

Provide the following unless indicated otherwise.

2.2.1 Structural Steel, Steel Pipe

2.2.1.1 Bolts

ASTM A 307, Grade A;Carbon steel bolts with minimum tensile strength of 414 MPa. ASTM A 325 and ASTM A 490M bolts shall be used where indicated on Drawings.

2.2.1.2 Nuts

ASTM A 563M, Grade A, heavy hex style, except nuts under M36 may be provided in hex style.

2.2.1.3 Washers

ASTM F 844 Plain, flat, unhardened steel washers for ASTM A 307 bolts, and ASTM F 436M washers for ASTM A 325M and ASTM A 490M bolts.

2.2.2 Foundation Anchorage

2.2.2.1 Bolts

ASTM A 307. Carbon steel bolts with minimum tensile strength of 414 MPa. The bolt heads of the supplied fasteners must be marked with the manufacturer's identification mark, the strength grade and type specified.

2.2.2.2 Nuts

ASTM A 563ASTM A 563, Grade A, hex style.

2.2.2.3 Washers

ASTM F 844.

2.3 STRUCTURAL STEEL ACCESSORIES

2.3.1 Welding Electrodes and Rods

AWS D1.1/D1.1M.

2.3.2 Nonshrink Grout

ASTM C 1107; Packaged, dry, non-shrink hydraulic cement, structurals grout, with no ASTM C 827 shrinkage. Grout shall be nonmetallic.

2.4 SHOP PRIMER

Provide red iron oxide primer.

2.5 FABRICATION

2.5.1 Shop Primer

2.5.1.1 Cleaning

Maintain steel surfaces free from rust, dirt, oil, grease, and other contaminants through final assembly.

2.5.1.2 Primer

Apply primer to a minimum dry film thickness of 0.05 mm. Repair damaged primed surfaces with an additional coat of primer.

PART 3 EXECUTION

3.1 ERECTION

3.1.1 STORAGE

Material shall be stored out of contact with the ground in such manner and location as will minimize deterioration.

3.2 CONNECTIONS

Except as modified in this section, connections not detailed shall be designed in accordance with AISC 335. Build connections into existing work. Do not tighten anchor bolts set in concrete with impact torque wrenches. Punch, subpunch and ream, or drill bolt holes. Bolts, nuts, and washers shall be clean of dirt and rust, and lubricated immediately prior to installation.

3.2.1 Common Grade Bolts

ASTM A 307; bolts shall be tightened to a "snug tight" fit. "Snug tight" is the tightness that exists when plies in a joint are in firm contact. If firm contact of joint plies cannot be obtained with a few impacts of an impact wrench, or the full effort of a man using a spud wrench, contact the Government for further instructions.

3.3 WELDING

AWS D1.1/D1.1M.

3.4 SHOP PRIMER REPAIR

Repair shop primer in accordance with the paint manufacturer's recommendation for surfaces damaged by handling, transporting, cutting, welding, or bolting.

3.4.1 Field Priming

Field priming of steel exposed to the weather, or located in building areas without HVAC for control of relative humidity. After erection, the field bolt heads and nuts, field welds, and any abrasions in the shop coat shall be cleaned and primed with paint of the same quality as that used for the shop coat.

3.5 FIELD QUALITY CONTROL

Perform field tests, and provide labor, equipment, and incidentals required for testing. The Government shall be notified in writing of defective welds, bolts, nuts, and washers within 7 working days of the date of weld inspection.

3.5.1 Welds

3.5.1.1 Visual Inspection

AWS D1.1/D1.1M. Furnish the services of AWS-certified welding inspectors for fabrication and erection inspection and testing and verification inspections. Welding inspectors shall visually inspect and mark welds, including fillet weld end returns.

-- End of Section --

SECTION 05500

MISCELLANEOUS METAL

PART 1 GENERAL

1.1 REFERENCES

The publications listed below form a part of this specification to the extent referenced. The publications are referred to in the text by basic designation only.

ASTM INTERNATIONAL (ASTM)

ASTM A 36/A 36M	(2000a) Carbon Structural Steel
ASTM A 500	(1999) Cold-Formed Welded and Seamless Carbon Steel Structural Tubing in Rounds and Shapes
ASTM A 53/A 53M	(2001) Pipe, Steel, Black and Hot-Dipped, Zinc-Coated, Welded and Seamless

AMERICAN SOCIETY OF CIVIL ENGINEERS (ASCE)

ASCE 7	(1998) Minimum Design Loads for Buildings and Other Structures

AMERICAN WELDING SOCIETY (AWS)

AWS D1.1/D1.1M	(1998) Structural Welding Code - Steel

NATIONAL ASSOCIATION OF ARCHITECTURAL METAL MANUFACTURERS (NAAMM)

NAAMM MBG 531	(1994) Metal Bar Grating Manual

1.2 GENERAL REQUIREMENTS

The Contractor shall verify all measurements and shall take all field measurements necessary before fabrication. Welding to or on structural steel shall be in accordance with AWS D1.1/D1.1M. Items specified to be galvanized, when practicable and not indicated otherwise, shall be hot-dip galvanized after fabrication. Exposed fastenings shall be compatible materials, shall generally match in color and finish, and shall harmonize with the material to which fastenings are applied. Materials and parts necessary to complete each item, even though such work is not definitely shown or specified, shall be included. Poor matching of holes for fasteners shall be cause for rejection. Fastenings shall be concealed where practicable. Thickness of metal and details of assembly and supports shall provide strength and stiffness. Joints exposed to the weather shall be formed to exclude water.

1.3 SUBMITTALS

Government approval is required for submittals with a "G" designation; submittals not having a "G" designation are for information only. When

used, a designation following the "G" designation identifies the office that will review the submittal for the Government. The following shall be submitted in accordance with Section 01330 SUBMITTAL PROCEDURES:

SD-02 Shop Drawings

Fabrication drawings of steel stairs; G AED

Handrails, installation drawings; G AED

Ladders, installation drawings; G AED

Submit fabrication drawings showing layout(s), connections to structural system, and anchoring details as specified in AISC 303.

Submit templates, erection and installation drawings indicating thickness, type, grade, class of metal, and dimensions. Show construction details, reinforcement, anchorage, and installation with relation to the building construction.

SD-03 Product Data

Access doors and panels

Cover plates and frames

Control-joint covers

Expansion joint covers

Handrails

Ladders

Steel stairs

Steel Stairs, circular

SD-04 Samples

Expansion joint covers

Control-joint covers

Samples shall be full size, taken from manufacturer's stock, and shall be complete as required for installation in the structure. Samples may be installed in the work, provided each sample is clearly identified and its location recorded.

1.4 DISSIMILAR MATERIALS

Where dissimilar metals are in contact, or where aluminum is in contact with concrete, mortar, masonry, wet or pressure-treated wood, or absorptive materials subject to wetting, the surfaces shall be protected with a coat of bituminous paint or asphalt varnish.

1.5 WORKMANSHIP

Miscellaneous metalwork shall be well formed to shape and size, with sharp

lines and angles and true curves. Drilling and punching shall produce clean true lines and surfaces. Welding shall be continuous along the entire area of contact except where tack welding is permitted. Exposed connections of work in place shall not be tack welded. Exposed welds shall be ground smooth. Exposed surfaces of work in place shall have a smooth finish, and unless otherwise approved, exposed riveting shall be flush. Where tight fits are required, joints shall be milled. Corner joints shall be coped or mitered, well formed, and in true alignment. Work shall be accurately set to established lines and elevations and securely fastened in place. Installation shall be in accordance with manufacturer's installation instructions and approved drawings, cuts, and details.

1.6 ANCHORAGE

Anchorage shall be provided where necessary for fastening miscellaneous metal items securely in place. Anchorage not otherwise specified or indicated shall include slotted inserts made to engage with the anchors, expansion shields, and powder-driven fasteners when approved for concrete; toggle bolts and through bolts for masonry; machine and carriage bolts for steel; and lag bolts and screws for wood.

1.6.1 Powder Driven Fasteners

Powder-Actuated Drive-Pin Fasteners: Powder-actuated-type, drive-pin attachments with pull-out and shear capacities appropriate for supported loads and building materials where used. Fastener system of type suitable for application indicated, fabricated from corrosion-resistant materials, with capability to sustain, without failure, a load equal to 10 times design load .

1.7 ALUMINUM FINISHES

Unless otherwise specified, aluminum items shall have standard mill finish. The thickness of the coating shall be not less than that specified for protective and decorative type finishes for items used in interior locations or architectural Class I type finish for items used in exterior locations. Items to be anodized shall receive a polished satin finish. Aluminum surfaces to be in contact with plaster or concrete during construction shall be protected with a field coat.

1.8 SHOP PAINTING

Surfaces of ferrous metal except galvanized surfaces, shall be cleaned and shop coated with the manufacturer's standard protective coating unless otherwise specified. Surfaces of items to be embedded in concrete shall not be painted. Items to be finish painted shall be prepared according to manufacturer's recommendations or as specified.

PART 2 PRODUCTS

2.1 HANDRAILS

Handrails shall be designed to resist a concentrated load of 890 N (200 pounds) in any direction at any point of the top of the rail or 292 Newtons per meter (20 pounds per foot) applied horizontally to top of the rail, whichever is more severe.

2.1.1 Steel Handrails, Including Carbon Steel Inserts

Steel handrails, including inserts in concrete, shall be steel pipe conforming to ASTM A 53/A 53M or structural tubing conforming to ASTM A 500, Grade A or B of equivalent strength. Steel railings shall be 50 mm nominal size. Railings shall be hot-dip galvanized and shop painted. Pipe collars shall be hot-dip galvanized steel.

a. Joint posts, rail, and corners shall be fabricated by one of the following methods:

(1) Flush type rail fittings of commercial standard, welded and ground smooth with railing splice locks secured with 10 mm hexagonal recessed-head setscrews.

(2) Mitered and welded joints by fitting post to top rail and intermediate rail to post, mitering corners, groove welding joints, and grinding smooth. Railing splices shall be butted and reinforced by a tight fitting interior sleeve not less than 150 mm long.

(3) Railings may be bent at corners in lieu of jointing, provided bends are made in suitable jigs and the pipe is not crushed.

b. Removable sections, toe-boards, and brackets shall be provided as indicated.

2.2 LADDERS

Ladders shall be galvanized steel or aluminum, fixed rail type. Fabrication of ladders shall consist of solid-section rod rungs fitted into holes in bar side rails and welded. Splices in side rails shall be made using full penetration welds and shall provide a flush and smooth transition between connecting ends. All welds shall be ground smooth Ladder rails shall be welded to bent-bar supporting brackets anchored to supporting structure as shown. Provide nonslip surfaces on top of each rung.

2.2.1 Ladder Cages

Provide where required by code. Fabricate 50 by 6 mm horizontal bands and 40 by 5 mm vertical bars. Provide attachments for fastening bands to the side rails of ladders or directly to the structure. Provide and fasten vertical bars on the inside of the horizontal bands. Extend cages not less than 690 mm or more than 710 mm from the centerline of the rungs, excluding the flare at the bottom of the cage, and not less than 690 mm in width. Clear the inside of the cage of projections.

2.3 FLOOR GRATINGS AND FRAMES

Carbon steel grating shall be designed to meet the indicated load requirements. Edges shall be banded with bars 6 mm less in height than bearing bars for grating sizes above 19 mm. Banding bars shall be flush with the top of bearing grating. Frames shall be of welded steel construction finished to match the grating. Floor gratings and frames shall be galvanized after fabrication.

2.4 STEEL STAIRS

Steel stairs shall be complete with structural or formed channel stringers,

steel plate treads, landings, columns, handrails, and necessary bolts and other fastenings as indicated. Structural steel shall conform to ASTM A 36/A 36M. Stairs and accessories shall be painted. Risers on stairs with metal pan treads shall be deformed to form a sanitary cove to retain the tread concrete. Integral nosings shall have braces extended into the concrete fill. Gratings for treads and landings shall conform to NAAMM MBG 531. Grating treads shall have slip-resistant nosings.

2.5 CHIMNEYS, VENTS, AND FLUES

Chimney connectors shall be formed of not lighter than 1.01 mm (20 gauge) galvanized steel. Stacks shall be designed and constructed to withstand a wind velocity of 122 km/h in accordance with ASCE 7. Unlined stacks shall be constructed of black-steel plates not less than 5 mm thick conforming to ASTM A 36/A 36M. Seams and joints shall be welded, except that an angle flange shall be provided for connection to the boiler, other equipment, and stack support.

2.6 MISCELLANEOUS

Miscellaneous plates and shapes for items that do not form a part of the structural steel framework, such as lintels, sill angles, miscellaneous mountings, and frames, shall be provided to complete the work.

2.7 SAFETY CHAINS

Safety chains shall be galvanized welded steel. Safety chains shall be straight link style, 5 mm diameter, minimum 39 links per meter (12 links per foot) and with bolt type snap hooks on each end.

2.8 ACCESS PANELS

Fabricate frame of preformed angle or channel with welded joints. Perforate wide leg or flange of frame section or extend frame section into expanded metal wings to provide a key for the plaster. Cover shall be hinged or snap-on type with turn-latch or spring catch. Fabricate access panels not larger than 600 by 900 mm from 1.8 mm thick steel with frames not lighter than 1.5 mm thick. Fabricate access panels larger than 600 by 900 mm as indicated. Factory-prime panels with rust-inhibitive paint.

2.9 MISCELLANEOUS METAL SUPPORTS

Provide miscellaneous steel framing and supports not specified in other Sections as needed to complete the Work. Fabricate units from steel shapes, plates, and bars of welded construction, unless otherwise indicated. Fabricate to sizes, shapes, and profiles indicated and as necessary to receive adjacent construction retained by framing and supports. Cut, drill, and tap units to receive hardware, hangers, and similar items.

2.10 WINDOW SUB-SILL

Window sub-sill shall be of 20 gauge steel of size and design indicated. Not less than two anchors per window section shall be provided for securing into mortar joints of masonry sill course. Sills for banks of windows shall have standard mill finish with a protective coating.

Product shall be Galvanized steel window sill 1 mm thick (20 gauge.

2.11 CLOTHES LINE ASSEMBLY

Fabricate clothes line assembly to comply with requirements indicated on Drawing for design, dimensions, member sizes and spacing, details, finish, and anchorage.

Assemble clothes line assembly in the shop to greatest extent possible to minimize field splicing and assembly. Disassemble units only as necessary for shipping and handling limitations. Clearly mark units for reassembly and coordinated installation.

Wire-rope assemblies (clothes line cable). Minimize amount of turnbuckle take-up used for dimensional adjustment so maximum amount is available for tensioning wire ropes. Wire rope shall be nylon covered.

Cut, drill, and punch metals cleanly and accurately. Remove burrs and ease edges to a radius of approximately 1 mm (1/32 inch), unless otherwise indicated. Remove sharp or rough areas on exposed surfaces.

Form work true to line and level with accurate angles and surfaces.

Fabricate connections that will be exposed to weather in a manner to exclude water. Provide weep holes where water may accumulate.

Cut, reinforce, drill, and tap as indicated to receive finish hardware, screws, and similar items.

Welded Connections: Cope components at connections to provide close fit, or use fittings designed for this purpose. Weld all around at connections, including at fittings.

2.12 WELDING HOOD

Welding hoods shall be provided where indicated on the drawings. Hoods shall be the canopy type and the plan dimensions shall be as indicated on the drawings. Hoods shall be fabricated of black carbon steel sheets or zinc coated steel sheets no less than 18 gauge. All metal edges shall be hemmed. Provide adequate steel shapes to properly stiffen the hood and retain its shape. Steel shapes shall be the same material as the hood material. Hoods fabricated from black steel shall be primed and painted in accordance with Division 9. The top of the hood shall be tapered at a 45 degree angle to the size of the exhaust fan suction duct indicated on the drawings. The front, sides, and back of the hood shall be 460 mm high from the air inlet (prior to the taper). The hoods shall be erected with steel shapes and rods and adequately braced. Erect the hood 1219 mm above the work table (welding bench furnished by owner). Any areas where the zinc coating is damaged from handling or welding shall be painted with zinc-rich paint.

2.13 GALVANIZED SECURITY GRILLES

Space 22 mm diameter, double-ribbed bars not to exceed 150 mm on center passing through and interlocking with 10 mm thick by 60 mm wide horizontal flat bars not exceeding 400 mm on center.

Plug weld and/or stitch weld security grating bar assembly to full perimeter plate frame and sub-frame at 255 mm on center with 12 mm diameter plug welds and/or 37 mm long stitch welds at 255 mm on center staggered.

Security round and flat bars, perimeter plate frame, and perimeter sub-frame members shall be fabricated from 1018-alloy steel and made tool-resistant.

2.14 GUARD POSTS (BOLLARDS/PIPE GUARDS)

Provide standard weight steel pipe as indicated on Drawings. Anchor posts in concrete as indicated and fill solidly with concrete with minimum compressive strength as indicated on Structural Drawings for footings.

2.15 Repair of Zinc-Coated Surfaces

Repair damaged surfaces with galvanizing repair method and paint conforming to ASTM A 780 or by application of stick or thick paste material specifically designed for repair of galvanizing. Clean areas to be repaired and remove slag from welds. Heat surfaces to which stick or paste material is applied, with a torch to a temperature sufficient to melt the metallics in stick or paste; spread molten material uniformly over surfaces to be coated and wipe off excess material.

PART 3 EXECUTION

3.1 GENERAL INSTALLATION REQUIREMENTS

All items shall be installed at the locations shown and according to the manufacturer's recommendations. Items listed below require additional procedures as specified.

3.2 REMOVABLE ACCESS PANELS

A removable access panel not less than 300 by 300 mm shall be installed directly below each valve, flow indicator, damper, or air splitter that is located above the ceiling, other than an acoustical ceiling, and that would otherwise not be accessible.

3.3 ATTACHMENT OF HANDRAILS

3.3.1 Installation of Steel Handrails

Installation shall be masonry with expansion shields and bolts, through-bolts, or toggle bolts. Rail ends shall be secured by steel pipe flanges through-bolted to a back plate or by 6 mm lag bolts to studs or solid backing.

3.4 INSTALLATION OF CHIMNEYS, VENTS, AND FLUES

A top band shall be provided on stacks for attachment of seismic bracing. Provide roof housing, rain cap, and other means required for a complete installation to prevent accumulation of water in the chimney, vent, or flue.

3.5 TRENCH FRAMES AND COVERS

Trench frames and covers shall finish flush with the floor.

3.6 INSTALLATION OF GUARD POSTS (BOLLARDS/PIPE GUARDS)

Pipe guards shall be set vertically in concrete piers. Piers shall be constructed of, and the hollow cores of the pipe filled with, concrete specified in Section 03300 CAST-IN-PLACE CONCRETE.

-- End of Section --

SECTION 05811

EXPANSION JOINT SYSTEMS

PART 1 GENERAL

1.1 DEFINITIONS

1.1.1 Expansion Joint System (Architectural Joint System)

Any filler or cover used to span, fill, cover, or seal a joint, except expanding foam seals and poured or foamed in-place sealants.

1.1.2 Cyclic Movement

Periodic change between widest and narrowest joint widths in an automatically mechanically controlled system.

1.1.3 Fire Barriers

Any material or material combination, when fire tested after cycling, designated to resist passage of flame and hot gases through a movement joint.

1.1.4 Maximum Joint Width

Widest linear gap a joint system tolerates and performs its designed function without damaging its functional capabilities.

1.1.5 Minimum Joint Width

Narrowest linear gap a joint system tolerates and performs its designed function without damaging its functional capabilities.

1.1.6 Movement Capability

Value obtained from the difference between widest and narrowest widths of a joint opening typically expressed in numerical values (mm or inches) or a percentage of nominal value of joint width.

1.1.7 Nominal Joint Width

Width of linear gap indicated as representing the conditions existing when architectural joint systems will be installed or, if no nominal joint width is indicated, a width equal to the sum of maximum and minimum joint widths divided by two.

1.2 PERFORMANCE REQUIREMENTS

1.2.1 General

Provide factory-fabricated architectural joint systems capable of withstanding the types of loads and of accommodating the kinds of movement, and the other functions for which they are designed including those specified below, without failure. Types of failure include those listed below.

Visual metal fatigue.
Disengagement of components.
Broken component.
Permanent deformation of component.
Loose components after test.
Deep scratches in component.
Scaling or cracking of the component.
Tearing (cohesive failure) of the component.
Loss of component.
Loss of component bonding (adhesive failure).
Dislocation of the component during testing.
Loss of component recovery during testing.

1.2.1.1 Exterior Joints

Provide joint systems that prevent penetration of water, moisture, and other substances deleterious to building components or content.

1.3 SUBMITTALS

Government approval is required for submittals with a "G" designation; submittals not having a "G" designation are for information only. When used, a designation following the "G" designation identifies the office that will review the submittal for the Government. Submit the following in accordance with Section 01330 SUBMITTAL PROCEDURES:

SD-02 Shop Drawings

Waterstops; G AED

Shop drawings and fabrication drawings provided by the manufacturer or prepared by the Contractor.

SD-03 Product Data

Preformed Expansion Joint Filler
Sealant
Waterstops

Manufacturer's literature, including safety data sheets, for preformed fillers and the lubricants used in their installation; field-molded sealants and primers (when required by sealant manufacturer); preformed compression seals; and waterstops. Manufacturer's recommended instructions for installing preformed fillers, field-molded sealants; preformed compression seals; and waterstops; and for splicing non-metallic waterstops.

SD-04 Samples

Lubricant for Preformed Compression Seals

Specimens identified to indicate the manufacturer, type of material, size and quantity of material, and shipment or lot represented. Each sample shall be a piece not less than 3 m of 25 mm nominal width or wider seal or a piece not less than 4 m of compression seal less than 25 mm nominal width. One L of lubricant shall be provided.

Field-Molded Type

Four liters of field-molded sealant and one L of primer (when primer is recommended by the sealant manufacturer) identified to indicate manufacturer, type of material, quantity, and shipment or lot represented.

Non-metallic Materials

Specimens identified to indicate manufacturer, type of material, size, quantity of material, and shipment or lot represented. Each sample shall be a piece not less than 300 mm long cut from each 61 m of finished waterstop furnished, but not less than a total of 1 m of each type, size, and lot furnished. One splice sample of each size and type for every 50 splices made in the factory and every 10 splices made at the job site. The splice samples shall be made using straight run pieces with the splice located at the mid-length of the sample and finished as required for the installed waterstop. The total length of each splice shall be not less than 300 mm long.

SD-07 Certificates

Preformed Expansion Joint Filler
Sealant
Waterstops

Certificates of compliance stating that the joint filler and sealant materials and waterstops conform to the requirements specified.

1.4 QUALITY ASSURANCE

1.4.1 Source Limitations

Obtain architectural joint systems through one source from a single manufacturer. Coordinate compatibility with adjoining joint systems specified in other Sections.

PART 2 PRODUCTS

2.1 MATERIALS

2.1.1 Aluminum

Aluminum extrusion minimum tensile ad yield strength 22 and 16 ksi respectively and 38 and 35 ksi for aluminum sheet and plate.

Apply manufacturer's standard protective coating on aluminum surfaces to be placed in contact with cementitious materials.

2.1.2 Preformed Seals

Single or multicellular extruded elastomeric seals designed with or without continuous, longitudinal, internal baffles. Formed to be installed in frames or with anchored flanges, in color indicated or, if not indicated, as selected by Architect from manufacturer's standard colors.

2.1.3 Accessories

Manufacturer's standard anchors, clips, fasteners, set screws, spacers, flexible moisture barrier and filler materials, drain tubes, lubricants, adhesives, and other accessories compatible with material in contact, as indicated or required for complete installations.

2.2 EXPANSION JOINT SYSTEMS

2.2.1 General

Provide expansion joint systems of design, basic profile, materials, and operation indicated. Provide units with the capability to accommodate joint widths indicated and variations in adjacent surfaces.

a. Furnish units in longest practicable lengths to minimize number of end joints. Provide hairline mitered corners where joint changes directions or abuts other materials.

b. Include closure materials and transition pieces, tee-joints, corners, curbs, cross-connections, and other accessories as required to provide continuous joint systems.

2.2.2 Interior Joints

Provide interior joint profiles for use in walls, floors and ceilings. All profiles, side plates and mounting brackets shall be made of aluminum. Flexible insert is shall be made of synthetic rubber, long wearing, temperature resistant, weather resistant, extensively resistant to oils, acid and bitumen. Joints shall be fixed to the surface by adhesive or mechanical means.

2.2.3 Exterior Joints

2.2.3.1 Exterior Seismic joint

Provide manufacturer's assemblies designed to accommodate seismic movement. Provide prefabricated units for corner and joint intersections and horizontal and vertical transitions, splicing units, inner seals, adhesives, coatings, and other components as recommended by joint unit manufacturer for complete installation.

2.2.3.2 Aluminum Expansion Joint Assemblies

Assemblies consisting of pairs of aluminum units and provisions for anchoring and sealing to roofing membrane or flashing or wall finish, as applicable, in a waterproof-sealed joint. Provide free-to-move, extruded-aluminum cap anchored against displacement and waterproofed by integral seals.

a. Base frame shall be extruded aluminum with mill finish, minimum 2.0-mm-thick with mill finish.

b. Moisture barrier shall be semiconcealed, captive, polymeric sheet bellows unit of neoprene, EPDM, reinforced chlorinated polyethylene, or PVC, not less than 0.8 mm thick.

PART 3 EXECUTION

3.1 PREPARATION

3.1.1 General

Prepare substrates according to architectural joint system manufacturer's written instructions.

3.1.2 Coordination

Coordinate and furnish anchorages, Placement Drawings, and instructions for installing joint systems to be embedded in or anchored to concrete or to have recesses formed into edges of concrete slab for later placement and grouting-in of frames.

3.1.3 Fastening to In-Place Construction

Provide anchorage devices and fasteners where necessary to secure joint systems to in-place construction, including threaded fasteners with drilled-in expansion shields for masonry and concrete where anchoring members are not embedded in concrete. Provide fasteners of metal, type, and size to suit type of construction indicated and to provide for secure attachment of joint systems.

3.2 INSTALLATION

3.2.1 General

Comply with manufacturer's written instructions for handling and installing architectural joint assemblies and materials, unless more stringent requirements are indicated.

3.2.2 Coordination

Coordinate installation of architectural joint assembly materials and associated work so complete assemblies comply with assembly performance requirements.

3.2.3 Terminations

Terminate exposed ends of exterior architectural joint assemblies with factory-fabricated termination devices to maintain waterproof system.

3.2.4 Transitions

Install factory-fabricated transitions between wall expansion-joint cover assemblies and roof expansion-joint assemblies to provide continuous, uninterrupted, watertight construction.

3.2.5 Cutting, Fitting, and Placement

Perform cutting, drilling, and fitting required to install joint systems.

a. Install joint cover assemblies in true alignment and proper relationship to joints and adjoining finished surfaces measured from established lines and levels.

b. Allow adequate free movement for thermal expansion and contraction of

metal to avoid buckling.

c. Set covers in horizontal surfaces at elevations that place exposed surfaces flush with adjoining finishes.

d. Locate wall, ceiling, and soffit covers in continuous contact with adjacent surfaces.

e. Securely attach in place with required accessories.

f. Locate anchors at interval recommended by manufacturer, but not less than 75 mm from each end and not more than 600 mm o.c.

3.2.6 Continuity

Maintain continuity of joint systems with a minimum number of end joints and align metal members. Cut and fit ends to produce joints that will accommodate thermal expansion and contraction of metal to avoid buckling of frames. Adhere flexible filler materials, if any, to frames with adhesive or pressure-sensitive tape as recommended by manufacturer.

3.2.7 Joint Systems with Seals

Seal end joints within continuous runs and joints at transitions according to manufacturer's written instructions to provide a watertight installation.

3.2.8 Expansion Seals

Install interior seals in continuous lengths. Install exterior seal in standard lengths and vulcanize or heat-weld field splice joints to provide watertight joints using manufacturer's recommended procedures. Seal transitions and end joints according to manufacturer's written instructions.

3.3 CLEANING AND PROTECTION

Do not remove protective covering until finish work in adjacent areas is complete. When protective covering is removed, clean exposed metal surfaces to comply with manufacturer's written instructions.

-- End of Section --

SECTION 06411

ARCHITECTURAL CASEWORK

PART 1 GENERAL

1.1 REFERENCES

The publications listed below form a part of this specification to the extent referenced. The publications are referred to in the text by basic designation only.

AMERICAN NATIONAL STANDARDS INSTITUTE (ANSI)

ANSI A208.1	(1999) Particleboard Mat Formed Woods
ANSI A208.2	(1994) Medium Density Fiberboard (MDF)

ASTM INTERNATIONAL (ASTM)

ASTM D 1037	(1999) Evaluating Properties of Wood-Base Fiber and Particle Panel Materials

ARCHITECTURAL WOODWORK INSTITUTE (AWI)

AWI Qual Stds	(1999) Architectural Woodwork Quality Standards

1.2 GENERAL DESCRIPTION

Work in this section includes custom casework cabinets as shown on the drawings and as described in this specification. This Section includes cabinet hardware. All exposed and semi-exposed surfaces, whose finish is not otherwise noted on the drawings or finish schedule, shall be sanded smooth and shall receive a clear finish of polyurethane. Wood finish may be shop finished or field applied in accordance with Section 09900 PAINTING, GENERAL.

1.3 SUBMITTALS

Government approval is required for submittals with a "G" designation; submittals not having a "G" designation are for information only. When used, a designation following the "G" designation identifies the office that will review the submittal for the Government. All items designated with a "G", including product literature, calculations, component data, certificates, diagrams, drawings, and samples shall be submitted concurrently in one complete system submittal. Omission of any required submittal item from the package shall be sufficient cause for disapproval of the entire submittal. Unless otherwise indicated in the submittal review commentary, disapproval of any item within the package shall require a re-submittal of the entire system package, in which all deficiencies shall be corrected. The following shall be submitted in accordance with Section 01330 SUBMITTAL PROCEDURES:

SD-02 Shop Drawings

Shop Drawings
Installation

Shop drawings showing all fabricated casework items in plan view, elevations and cross-sections to accurately indicate materials used, details of construction, dimensions, methods of fastening and erection, and installation methods proposed. Shop drawing casework items shall be clearly cross-referenced to casework items located on the project drawings. Shop drawings shall include a color schedule of all casework items to include all countertop, exposed, and semi-exposed cabinet finishes to include finish material manufacturer, pattern, and color.

SD-03 Product Data

Wood Materials
Wood Finishes
Finish Schedule

Descriptive data which provides narrative written verification of all types of construction materials and finishes, methods of construction, etc. not clearly illustrated on the submitted shop drawings. Data shall provide written verification of conformance with AWI Qual Stds for the quality indicated to include materials, tolerances, and types of construction. Both the manufacturer of materials and the fabricator shall submit available literature which describes re-cycled product content, operations and processes in place that support efficient use of natural resources, energy efficiency, emissions of ozone depleting chemicals, management of water and operational waste, indoor environmental quality, and other production techniques supporting sustainable design and products.

SD-04 Samples

Plastic Laminates

Two samples of each plastic laminate pattern and color. Samples shall be a minimum of 120 by 170 mm in size.

Cabinet Hardware

One sample of each cabinet hardware item specified to include hinges, pulls, and drawer glides.

SD-07 Certificates

Quality Assurance
Laminate Clad Casework

A quality control statement which illustrates compliance with and understanding of AWI Qual Stds requirements, in general, and the specific AWI Qual Stds requirements provided in this specification. The quality control statement shall also certify a minimum of ten years Contractor's experience in laminate clad casework fabrication and construction. The quality control statement shall provide a list of a minimum of five successfully completed projects of a similar scope, size, and complexity.

1.4 QUALITY ASSURANCE

Unless otherwise noted on the drawings, all materials, construction methods, and fabrication shall conform to and comply with the custom grade quality standards as outlined in AWI Qual Stds, Section 400G and Section 400B for laminate clad cabinets. These standards shall apply in lieu of omissions or specific requirements in this specification. Contractors and their personnel engaged in the work shall be able to demonstrate successful experience with work of comparable extent, complexity and quality to that shown and specified. Contractor must demonstrate knowledge and understanding of AWI Qual Stds requirements for the quality grade indicated.

1.5 DELIVERY AND STORAGE

Casework may be delivered knockdown or fully assembled. All units shall be delivered to the site in undamaged condition, stored off the ground in fully enclosed areas, and protected from damage. The storage area shall be well ventilated and not subject to extreme changes in temperature or humidity.

1.6 SEQUENCING AND SCHEDULING

Work shall be coordinated with other trades. Units shall not be installed in any room or space until painting, and ceiling installation are complete within the room where the units are located. Floor cabinets shall be installed before finished flooring materials are installed.

1.7 PROJECT/SITE CONDITIONS

Field measurements shall be verified as indicated in the shop drawings before fabrication.

PART 2 PRODUCTS

2.1 WOOD MATERIALS

2.1.1 Veneer

Plain-Sliced Red Oak-A-Grade Select.

2.1.2 Panel Products

2.1.2.1 Plywood

All plywood panels used for framing purposes shall be veneer core plywood. Nominal thickness of plywood panels shall be as indicated in this specification and on the drawings.

2.1.2.2 Particleboard

All particleboard shall be industrial grade, medium density (640 to 800 kg per cubic meter), 18 mm thick. A moisture-resistant particleboard in grade Type 2-M-2 or 2-M-3 shall be used as the substrate for plastic laminate covered countertops and other areas subjected to moisture. Particleboard shall meet the minimum standards listed in ASTM D 1037 and ANSI A208.1.

2.1.2.3 Medium Density Fiberboard

Medium density fiberboard (MDF) shall be an acceptable panel substrate where noted on the drawings. Medium density fiberboard shall meet the minimum standards listed in ANSI A208.2.

2.2 CABINET HARDWARE

All hardware shall consist of the following components:

a. Door Hinges: Self-closing, concealed type.

b. Cabinet Pulls: Wire type.

c. Drawer Slide: Side mounted type with full extension and a minimum 45kg load capacity. Slides shall include an integral stop to avoid accidental drawer removal.

d. Cabinet locks: Provide integral door and drawer locks for all cabinets in medical clinic. Locks shall be deadbolt type locks, surface mounted on inside of door or drawer with only the cylinder exposed on outside.

e. Adjustable Shelf Support System:

12) Multiple holes with metal pin supports.

All cabinet hardware shall have satin chrome finish to match door hardware in Section 08710.

2.3 FASTENERS

Nails, screws, and other suitable fasteners shall be the size and type best suited for the purpose and as recommended by casework manufacturer.

2.4 ADHESIVES, CAULKS, AND SEALANTS

2.4.1 Adhesives

Adhesives shall be of a formula and type specifically recommended by manufacturer for intended use. Adhesives shall be selected for their ability to provide a durable, permanent bond and shall take into consideration such factors as materials to be bonded, expansion and contraction, bond strength, fire rating, and moisture resistance.

2.4.1.1 Wood Joinery

Adhesives used to bond wood members shall be for exterior use. Use multiple Dovetail for Drawer Assembly.

2.4.1.2 Laminate Adhesive

Adhesive used to join high-pressure decorative laminate to wood shall be a water-based contact adhesive . PVC edgebanding shall be adhered using a polymer-based hot melt glue.

2.4.2 Sealant

Sealant shall be of a type and composition recommended by the substrate

manufacturer to provide a moisture barrier at sink cutouts and all other locations where unfinished substrate edges may be subjected to moisture.

2.5 WOOD FINISHES

As selected by government from Manufacturer's standard list.

2.6 Countertops

Provide "Chem surf" for clinic Wood particle core with acid resistant plastic laminate surface, color Black, square edge, self edge. Provide High pressure laminate for reception desk.

2.7 ACCCESSORIES

2.7.1 Grommets

Grommets diameter shall be of 30 mm minimum. Locations shall be as indicated on the drawings.

2.8 FABRICATION

Fabrication and assembly of components shall be accomplished at the shop site to the maximum extent possible. Construction and fabrication of cabinets and their components shall meet or exceed the requirements for AWI custom grade unless otherwise indicated in this specification. Cabinet style shall be flush overlay, in accordance with AWI Qual Stds, Section 400-G descriptions .

PART 3 EXECUTION

3.1 INSTALLATION

Installation shall comply with applicable requirements for AWI Qual Stds custom quality standards. Countertops and fabricated assemblies shall be installed level, plumb, and true to line, in locations shown on the drawings. Cabinets and other casework assemblies shall be attached and anchored securely to the floor and walls with mechanical fasteners that are appropriate for the wall and floor construction.

3.1.1 Anchoring Systems

3.1.1.1 Wall

Cabinet to be wall mounted shall utilize manufacturer's recommended anchering system.

3.1.2 Countertops

Countertops shall be installed in locations as indicated on the drawings. Countertops shall be fastened to supporting casework structure with mechanical fasteners, hidden from view. All joints formed by the countertop and adjacent wall surfaces shall be filled.

3.1.3 Hardware

Casework hardware shall be installed in types and locations as indicated on the drawings.

3.1.4 Doors, Drawers and Removable Panels

The fitting of doors, drawers and removable panels shall be accomplished within target fitting tolerances for gaps and flushness in accordance with AWI Qual Stds custom grade.

3.1.5 Plumbing Fixtures

Sinks, sink hardware, and other plumbing fixtures shall be installed in locations as indicated on the drawings and in accordance with Section 15400 PLUMBING, GENERAL PURPOSE.

-- End of Section --

SECTION 07112

BITUMINOUS DAMPPROOFING

PART 1 GENERAL

1.1 REFERENCES

The publications listed below form a part of this specification to the extent referenced. The publications are referred to within the text by the basic designation only.

ASTM INTERNATIONAL (ASTM)

ASTM D 1187	(1997; R 2002e1) Asphalt-Base Emulsions for Use as Protective Coatings for Metal
ASTM D 1227	(1995; R 2000) Emulsified Asphalt Used as a Protective Coating for Roofing

BRITISH STANDARDS INSTITUTION (BSI)

BS 6949:1991	(1991) Specification for bitumen-based coatings for cold application excluding use in contact with potable water

1.2 SUBMITTALS

Government approval is required for submittals with a "G" designation; submittals not having a "G" designation are for information only. When used, a designation following the "G" designation identifies the office that will review the submittal for the Government. The following shall be submitted in accordance with Section 01330 SUBMITTAL PROCEDURES:

SD-07 Certificates

Materials

1.3 DELIVERY AND STORAGE

Deliver materials in sealed containers bearing manufacturer's original labels. Labels shall include date of manufacture, contents of each container, performance standards that apply to the contents and recommended shelf life.

1.4 SAFETY AND HEALTH REQUIREMENTS

Refer to manufacturer's Materials safety Data Sheet

PART 2 PRODUCTS

2.1 EMULSION-BASED ASPHALT DAMPPROOFING

2.1.1 Non-Fibrated Emulsion-Based Asphalt

Non-fibrated emulsion-based asphalt dampproofing shall be cold-applied type conforming to ASTM D 1187 Type II, ASTM D 1227 Type III or BS 6949:1991.

Asphalt shall contain a minimum 58 percent solids by weight, 55 percent solids by volume.

PART 3 EXECUTION

3.1 APPLICATION

Apply per manufacturers written instructions

-- End of Section --

SECTION 07212

MINERAL FIBER BLANKET INSULATION

PART 1 GENERAL

1.1 REFERENCES

The publications listed below form a part of this specification to the extent referenced. The publications are referred to in the text by the basic designation only.

ASTM INTERNATIONAL (ASTM)

ASTM C 665	(2001e1) Specification for Mineral-Fiber Blanket Thermal Insulation for Light Frame Construction and Manufactured Housing
ASTM E 96	(2000e1) Water Vapor Transmission of Materials
ASTM E 136	(1996; Rev. A) Behavior of Materials in a Vertical Tube Furnace at 750 Degrees C

BRITISH STANDARDS INSTITUTION (BSI)

BS 874	(1986) Methods for determining thermal insulating properties.

U.S. NATIONAL ARCHIVES AND RECORDS ADMINISTRATION (NARA)

29 CFR 1910.134	Respiratory Protection

NATIONAL FIRE PROTECTION ASSOCIATION (NFPA)

NFPA 70	(2005) National Electrical Code

1.2 SUBMITTALS

Government approval is required for submittals with a "G" designation; submittals not having a "G" designation are for information only. When used, a designation following the "G" designation identifies the office that will review the submittal for the Government. The following shall be submitted in accordance with Section 01330 SUBMITTAL PROCEDURES:

SD-03 Product Data

Blanket insulation

Accessories

1.3 DELIVERY, STORAGE, AND HANDLING

1.3.1 Delivery

Deliver materials to site in original sealed wrapping bearing

manufacturer's name and brand designation, specification number, type, grade, R-value, and class. Store and handle to protect from damage. Do not allow insulation materials to become wet, soiled, crushed, or covered with ice or snow. Comply with manufacturer's recommendations for handling, storing, and protecting of materials before and during installation.

1.3.2 Storage

Inspect materials delivered to the site for damage; unload and store out of weather in manufacturer's original packaging. Store only in dry locations, not subject to open flames or sparks, and easily accessible for inspection and handling.

1.4 SAFETY PRECAUTIONS

1.4.1 Respirators

Provide installers with dust/mist respirators, training in their use, and protective clothing, all approved by National Institute for Occupational Safety and Health (NIOSH)/Mine Safety and Health Administration (MSHA) in accordance with 29 CFR 1910.134.

1.4.2 Smoking

Do not smoke during installation of blanket thermal insulation.

PART 2 PRODUCTS

2.1 MANUFACTURERS

Basis of Design: Izocam Glassfiber Type 16 kg/m3, 75 mm Unfaced Blankets by IMBT Group; Building Roll KBR16 by Kimmo (Kuwait Insulating Materials Manufacturing Company); or Polyglass Poly Building Insulation by Poly Glass Fibre (M) BHD.

Acceptable Manufacturers: Izocam by IMBT Group, Kimmco, or equal.

1. Basis of Design manufacturer.
2. Kimmo (Kuwait Insulating Materials Manufacturing Company).
3. Isover.
4. Poly Glass Fibre (M) BHD.
5. Equivalent product complying with requirements of this specification for proposed variant products.

2.2 BLANKET INSULATION

ASTM C 665 or BS 874, Types I, II, or III Glass fiber blankets.

2.2.1 Prohibited Materials

Do not provide asbestos-containing materials.

2.3 BLOCKING

Wood, metal, unfaced mineral fiber blankets in accordance with ASTM C 665, Type I , or other approved materials. Use only non-combustible materials meeting the requirements of ASTM E 136 for blocking around chimneys and heat producing devices.

2.4 PRESSURE SENSITIVE TAPE

As recommended by the insulation manufacturer.

2.5 ACCESSORIES

2.5.1 Adhesive

As recommended by the insulation manufacturer.

2.5.2 Mechanical Fasteners

Corrosion resistant fasteners as recommended by the insulation manufacturer.

2.5.3 Wire Mesh

Corrosion resistant and as recommended by the insulation manufacturer.

2.5.4 VAPOR BARRIER

Vapor barrier shall be polyethylene sheeting with a minimum thickness of 0.15 mm (6 mils) or other equivalent material having a vapor permeance rating not exceeding 30 nanograms per Pascal per second per square meter (0.5 perms) as determined in accordance with ASTM E 96.

PART 3 EXECUTION

3.1 PREPARATION

3.1.1 Blocking at Soffit Vents

Prior to installation of insulation, install permanent blocking to prevent insulation from slipping over, clogging, or restricting air flow through soffit vents at eaves.

3.1.2 Blocking Around Heat Producing Devices

Install non-combustible blocking around heat producing devices to provide the following clearances:

a. Recessed lighting fixtures, including wiring compartments, ballasts, and other heat producing devices, unless these are certified by the manufacturer for installation surrounded by insulation: 75 mm from outside face of fixtures and devices or as required by NFPA 70, if insulation is to be placed above fixture or device, 600 mm above fixture.

b. Vents and vent connectors used for venting the products of combustion. Provide 50 mm minimum clearance or as required by equipment manufacturer.

3.2 INSTALLATION

3.2.1 Insulation

Install and handle insulation in accordance with manufacturer's instructions. Keep material dry and free of extraneous materials. Ensure personal protective clothing and respiratory equipment is used as required. Observe safe work practices.

3.2.1.1 Electrical wiring

Do not install insulation in a manner that would sandwich electrical wiring between two layers of insulation.

3.2.1.2 Continuity of Insulation

Install blanket insulation to butt tightly against adjoining blankets and to joists, and any obstructions. Provide continuity and integrity of insulation at corners, wall to ceiling joints, and roof. Avoid creating thermal bridges. Offset insulation butt joints in adjacent layers.

3.2.1.3 Cold Climate Requirement

Place insulation to the outside of pipes.

3.2.1.4 Insulation without Affixed Vapor Retarder

Provide snug friction fit to hold insulation in place. Stuff pieces of insulation into cracks between trusses, joists, studs and other framing, such as at attic access doors, door and window heads, jambs, and sills, band joists, and headers.

3.2.1.5 Sizing of Blankets

Provide only full width blankets when insulating between joists. Size width of blankets for a snug fit where joists are irregularly spaced.

3.2.1.6 Thickness of Blankets

Provide overall insualtion assembly thickness of not less than 15 cm.

3.2.1.7 Special Requirements for Ceilings

Place insulation under electrical wiring occurring across joists. Pack insulation into narrowly spaced framing. Do not block flow of air through soffit vents.

-- End of Section --

SECTION 07214

BOARD AND BLOCK INSULATION

PART 1 GENERAL

1.1 REFERENCES

The publications listed below form a part of this specification to the extent referenced. The publications are referred to within the text by the basic designation only.

ASTM INTERNATIONAL (ASTM)

ASTM C 1289	(2003) Faced Rigid Cellular Polyisocyanurate Thermal Insulation Board
ASTM C 552	(2003) Cellular Glass Thermal Insulation
ASTM C 578	(2004) Rigid, Cellular Polystyrene Thermal Insulation
ASTM C 59/C 59M1	(2001) Unfaced Preformed Rigid Cellular Polyisocyanurate Thermal Insulation
ASTM C 612	(2004) Mineral Fiber Block and Board Thermal Insulation
ASTM E 84	(2004) Surface Burning Characteristics of Building Materials

1.2 SUBMITTALS

Government approval is required for submittals with a "G" designation; submittals not having a "G" designation are for information only. When used, a designation following the "G" designation identifies the office that will review the submittal for the Government. The following shall be submitted in accordance with Section 01330 SUBMITTAL PROCEDURES:

SD-03 Product Data

Block or board insulation; G AED

Vapor retarder

Pressure sensitive tape

Protection board or coating

Accessories

SD-08 Manufacturer's Instructions

Block or Board Insulation

Adhesive

1.3 DELIVERY, STORAGE, AND HANDLING

1.3.1 Delivery

Deliver materials to the site in original sealed wrapping bearing manufacturer's name and brand designation, specification number, type, grade, R-value, and class. Store and handle to protect from damage. Do not allow insulation materials to become wet, soiled, crushed, or covered with ice or snow. Comply with manufacturer's recommendations for handling, storing, and protecting of materials before and during installation.

1.3.2 Storage

Inspect materials delivered to the site for damage; unload and store out of weather in manufacturer's original packaging. Store only in dry locations, not subject to open flames or sparks, and easily accessible for inspection and handling.

1.4 SAFETY PRECAUTIONS

Refer to manufacturer's Safety instructions

PART 2 PRODUCTS

2.1 BLOCK OR BOARD INSULATION

Provide only thermal insulating materials recommended by manufacturer for type of application indicated. Provide board or block thermal insulation conforming to the following standards and the physical properties listed below:

a. Cellular Glass: ASTM C 552

b. Extruded Preformed Cellular Polystyrene: ASTM C 578

c. Mineral Fiber Block and Board: ASTM C 612

d. Unfaced Preformed Rigid Polyurethane and Polyisocyanurate Board: ASTM C 59/C 59M1

e. Faced Rigid Cellular Polyisocyanurate and Polyurethane Insulation: ASTM C 1289

2.1.1 Thermal Resistance

Ceiling R-30 Wall R-20.

2.1.2 Fire Protection Requirement

a. Flame spread index of 75 or less when tested in accordance with ASTM E 84.

b. Smoke developed index of 150 or less when tested in accordance with ASTM E 84.

2.2 PROTECTION BOARD OR COATING

As recommended by insulation manufacturer.

2.3 ACCESSORIES

2.3.1 Adhesive

As recommended by insulation manufacturer.

2.3.2 Mechanical Fasteners

Corrosion resistant fasteners as recommended by the insulation manufacturer.

PART 3 EXECUTION

3.1 EXISTING CONDITIONS

Before installing insulation, ensure that all areas that will be in contact with the insulation are dry and free of projections which could cause voids, compressed insulation, or punctured vapor retarders. If installing perimeter or under slab insulation, check that the fill is flat, smooth, dry, and well tamped. If moisture or other conditions are found that do not allow the proper installation of the insulation, do not proceed but notify the Contracting Officer of such conditions.

3.2 INSTALLATION

3.2.1 Insulation Board

Install and handle insulation in accordance with the manufacturer's installation instructions. Keep material dry and free of extraneous materials. Observe safe work practices.

3.2.2 Electrical Wiring

Do not install insulation in a manner that would sandwich electrical wiring between two layers of insulation.

3.2.3 Cold Climate Requirement

Place insulation to the outside of pipes.

3.2.4 Continuity of Insulation

Butt tightly against adjoining boards, studs, rafters, joists, sill plates, headers and obstructions. Provide continuity and integrity of insulation at corners, wall to ceiling joint, roof, and floor. Avoid creating any thermal bridges or voids.

3.3 INSTALLATION ON WALLS

3.3.1 Installation using Furring Strips

Install insulation between members as recommended by insulation manufacturer.

3.3.2 Installation on Masonry Walls

Apply board directly to masonry with adhesive or fasteners as recommended by the insulation manufacturer. Fit between obstructions without impaling board on ties or anchors. Apply in parallel courses with joints breaking midway over course below. Put ends in moderate contact with adjoining

insulation without forcing. Cut and shape as required to fit around wall penetrations, projections or openings to accommodate conduit or other services. Seal around cut-outs with sealant.

-- End of Section --

SECTION 07416

STRUCTURAL STANDING SEAM METAL ROOF (SSSMR) SYSTEM

PART 1 GENERAL

1.1 REFERENCES

The publications listed below form a part of this specification to the extent referenced. The publications are referred to within the text by the basic designation only.

ALUMINUM ASSOCIATION (AA)

AA ADM1	(2005) Aluminum Design Manual

AMERICAN INSTITUTE OF STEEL CONSTRUCTION (AISC)

AISC 360	(2005) Specification for Structural Steel Buildings

AMERICAN IRON AND STEEL INSTITUTE (AISI)

AISI SG-973	(2002) Cold-Formed Steel Design Manual

AMERICAN SOCIETY OF CIVIL ENGINEERS (ASCE)

ASCE 7	(2005) Minimum Design Loads for Buildings and Other Structures

ASTM INTERNATIONAL (ASTM)

ASTM A 463/A 463M	(2006) Steel Sheet, Aluminum-Coated, by the Hot-Dip Process
ASTM A 653/A 653M	(2006a) Steel Sheet, Zinc-Coated (Galvanized) or Zinc-Iron Alloy-Coated (Galvannealed) by the Hot-Dip Process
ASTM A 792/A 792M	(2006a) Steel Sheet, 55% Aluminum-Zinc Alloy-Coated by the Hot-Dip Process
ASTM C 1177/C 1177M	(2006) Glass Mat Gypsum Substrate for Use as Sheathing
ASTM C 1289	(2006) Faced Rigid Cellular Polyisocyanurate Thermal Insulation Board
ASTM C 991	(2003) Flexible Glass Fiber Insulation for Metal Buildings
ASTM D 1308	(2002e1) Effect of Household Chemicals on Clear and Pigmented Organic Finishes
ASTM D 1654	(2005) Evaluation of Painted or Coated Specimens Subjected to Corrosive

	Environments
ASTM D 2244	(2005) Calculation of Color Tolerances and Color Differences from Instrumentally Measured Color Coordinates
ASTM D 2247	(2002) Testing Water Resistance of Coatings in 100% Relative Humidity
ASTM D 2794	(1993; R 2004) Resistance of Organic Coatings to the Effects of Rapid Deformation (Impact)
ASTM D 3359	(2002) Measuring Adhesion by Tape Test
ASTM D 4214	(1998) Evaluating the Degree of Chalking of Exterior Paint Films
ASTM D 4397	(2002) Polyethylene Sheeting for Construction, Industrial, and Agricultural Applications
ASTM D 522	(1993a; R 2001) Mandrel Bend Test of Attached Organic Coatings
ASTM D 523	(1989; R 1999) Specular Gloss
ASTM D 5894	(1996) Cyclic Salt Fog/UV Exposure of Painted Metal, (Alternating Exposures in a Fog/Dry Cabinet and a UV/Condensation Cabinet)
ASTM D 610	(2001) Evaluating Degree of Rusting on Painted Steel Surfaces
ASTM D 714	(2002e1) Evaluating Degree of Blistering of Paints
ASTM D 968	(2005) Abrasion Resistance of Organic Coatings by Falling Abrasive
ASTM E 1592	(2001) Structural Performance of Sheet Metal Roof and Siding Systems by Uniform Static Air Pressure Difference
ASTM E 84	(2007) Standard Test Method for Surface Burning Characteristics of Building Materials
ASTM E 96/E 96M	(2005) Water Vapor Transmission of Materials
ASTM G 154	(2000ae1) Operating Fluorescent Light Apparatus for UV Exposure of Nonmetallic Materials

1.2 SUBMITTALS

Government approval is required for submittals with a "G" designation;

submittals not having a "G" designation are for information only. When used, a designation following the "G" designation identifies the office that will review the submittal for the Government. The following shall be submitted in accordance with Section 01330 SUBMITTAL PROCEDURES:

SD-02 Shop Drawings

Structural Standing Seam Metal Roof; G AED

Metal roofing drawings and specifications and erection drawings; shop coating and finishing specifications; and other data as necessary to clearly describe design, materials, sizes, layouts, standing seam configuration, construction details, provisions for thermal movement, line of panel fixity, fastener sizes and spacings, sealants and erection procedures. Drawings shall reflect the intent of the architectural detailing using the manufacturer's proprietary products and fabricated items as required. The SSSMR system shop drawings shall be provided by the metal roofing manufacturer.

SD-03 Product Data

Design Analysis; G AED

Design analysis signed by a Registered Professional Engineer employed by the SSSMR manufacturer. The design analysis shall include a list of the design loads, and complete calculations for the support system (when provided by the Contractor), roofing system and its components; valley designs, gutter/downspout calculations, screw pullout test results, and shall indicate how expected thermal movements are accommodated.

Qualifications

Qualifications of the manufacturer and installer.

SD-04 Samples

Accessories

One sample of each type of flashing, trim, closure, thermal spacer block, cap and similar items. Size shall be sufficient to show construction and configuration.

Roof Panels

One piece of each type to be used, 225 mm long, full width.

Factory Color Finish

Three 75 by 125 mm samples of each type and color.

Fasteners

Two samples of each type to be used, with statement regarding intended use. If so requested, random samples of bolts, nuts, and washers as delivered to the job site shall be taken in the presence of the Contracting Officer and provided to the Contracting Officer for testing to establish compliance with

specified requirements.

Insulation

One piece, 300 by 300 mm, of each type and thickness to be used, with a label indicating the rated permeance (if faced) and R-values. The flame spread, and smoke developed rating shall be shown on the label or provided in a letter of certification.

Gaskets and Insulating Compounds

Two samples of each type to be used and descriptive data.

Sealant

One sample, approximately 0.5 kg, and descriptive data.

Concealed Anchor Clips

Two samples of each type used.

Subpurlins

One piece, 225 mm long.

EPDM Rubber Boots

One piece of each type.

SD-06 Test Reports

Wind Uplift Resistance; G AED

The report shall include the following information:

a. Details of the SSSMR system showing the roof panel cross-section with dimensions and thickness.

b. Details of the anchor clip, dimensions, and thickness.

c. Type of fasteners, size, and the number required for each connection.

d. Purlins/subpurlins size and spacing used in the test.

e. Description of the seaming operation including equipment used.

f. Maximum allowable uplift pressures. These pressures are determined from the ultimate load divided by a factor of safety equal to 1.65.

g. Any additional information required to identify the SSSMR system tested.

h. Signature and seal of an independent registered engineer who witnessed the test.

SD-07 Certificates

Structural Standing Seam Metal Roof

a. Certification that the actual thickness of uncoated sheets used in SSSMRS components including roofing panels, subpurlins, and concealed anchor clips complies with specified requirements.

b. Certification that materials used in the installation are mill certified.

c. Previous certification of SSSMR system tested under the Corps of Engineers' Standard Test Method in lieu of ASTM E 1592 testing.

d. Certification that the sheets to be furnished are produced under a continuing quality control program and that a representative sample consisting of not less than three pieces has been tested and has met the quality standards specified for factory color finish.

e. Certification of installer. Installer certification shall be furnished.

f. Warranty certificate. At the completion of the project the Contractor shall furnish signed copies of the 5-year Warranty for Structural Standing Seam Metal Roof (SSSMR) System, a sample copy of which is attached to this section, and the 20-year Manufacturer's Material Warranties, and the manufacturer's 20-year system weathertightness warranty.

Insulation

Certificate attesting that the polyisocyanurate insulation furnished for the project contains recovered material, and showing an estimated percent of such recovered material.

1.3 GENERAL REQUIREMENTS

The Contractor shall furnish a commercially available roofing system which satisfies all requirements contained herein and has been verified by load testing and independent design analyses to meet the specified design requirements.

1.3.1 Structural Standing Seam Metal Roof

The SSSMR system covered under this specification shall include the entire roofing system; the standing seam metal roof panels, fasteners, connectors, roof securement components, and assemblies tested and approved in accordance with ASTM E 1592. In addition, the system shall consist of panel finishes, slip sheet, insulation, vapor retarder, all accessories, components, and trim and all connections with roof panels. This includes roof penetration items such as vents, curbs, skylights; interior or exterior gutters and downspouts; eaves, ridge, hip, valley, rake, gable, wall, or other roof system flashings installed and any other components specified within this contract to provide a weathertight roof system.

1.3.2 Qualifications

1.3.2.1 Manufacturer

The SSSMR system shall be the product of a manufacturer who has been in the practice of manufacturing and designing SSSMR systems for a period of not less than 3 years and has been involved in at least five projects similar in size and complexity to this project.

1.3.2.2 Installer

The installer shall be certified by the SSSMR system manufacturer to have experience in installing at least three projects that are of comparable size, scope and complexity as this project for the particular roof system furnished. The installer may be either employed by the manufacturer or be an independent installer.

1.4 DESIGN ANALYSIS

The design of the SSSMR system shall be provided by the Contractor as a complete system. Members and connections not indicated on the drawings shall be designed by the Contractor. Roof panels, components, transitions, accessories, and assemblies shall be supplied by the same roofing system manufacturer.

1.4.1 Design Criteria

Design criteria shall be in accordance with ASCE 7.

1.4.2 Dead Loads

The dead load shall be the weight of the SSSMR system. Collateral loads such as sprinklers, mechanical and electrical systems, and ceilings shall not be attached to the panels.

1.4.3 Live Loads

1.4.3.1 Concentrated Loads

The panels and anchor clips shall be capable of supporting a 1335 N concentrated load. The concentrated load shall be applied at the panel midspan and will be resisted by a single standing seam metal roof panel assumed to be acting as a beam. The undeformed shape of the panel shall be used to determine the section properties.

1.4.3.2 Uniform Loads

The panels and concealed anchor clips shall be capable of supporting a minimum uniform live load of 960 Pa.

1.4.4 Roof Snow Loads

The design roof snow loads shall be in accordance with ASCE 7.

1.4.5 Wind Loads

The design wind uplift pressure for the roof system shall be as shown on the contract drawings. The design uplift force for each connection assembly shall be that pressure given for the area under consideration,

multiplied by the tributary load area of the connection assembly. The safety factor listed below shall be applied to the design force and compared against the ultimate capacity. Prying shall be considered when figuring fastener design loads.

a. Single fastener in each connection.....3.00

b. Two or more fasteners in each connection...2.25

1.4.6 Thermal Loads

Roof panels shall be free to move in response to the expansion and contraction forces resulting from a total temperature range of 104 degrees C during the life of the structure.

1.4.7 Framing Members Supporting the SSSMR System

Any additions/revisions to framing members supporting the SSSMR system to accommodate the manufacturer/fabricator's design shall be the Contractor's responsibility and shall be submitted for review and approval. New or revised framing members and their connections shall be designed in accordance with AISC 360. Maximum deflection under applied live load, snow, or wind load shall not exceed 1/180 of the span length.

1.4.8 Roof Panels Design

Steel panels shall be designed in accordance with AISI SG-973. Aluminum panels shall be designed in accordance with AA ADM1. The structural section properties used in the design of the panels shall be determined using the unloaded shape of the roof panels. The calculated panel deflection from concentrated loads shall not exceed 1/180 of the span length. The calculated panel deflection under applied live load, snow, or wind load shall not exceed 1/180 times the span length. Deflections shall be based on panels being continuous across three or more supports. Deflection shall be calculated and measured along the major ribs of the panels.

1.4.9 Accessories and Their Fasteners

Accessories and their fasteners shall be capable of resisting the specified design wind uplift forces and shall allow for thermal movement of the roof panel system. Exposed fasteners shall not restrict free movement of the roof panel system resulting from thermal forces. There shall be a minimum of two fasteners per clip. Single fasteners with a minimum diameter of 9 mm will be allowed when the supporting structural members are prepunched or predrilled.

1.5 PERFORMANCE REQUIREMENTS

The SSSMR shall be tested for wind uplift resistance in accordance with ASTM E 1592; SSSMR systems previously tested and approved by the Corps of Engineers' STANDARD TEST METHOD FOR STRUCTURAL PERFORMANCE OF SSMRS BY UNIFORM STATIC AIR PRESSURE DIFFERENCE may be acceptable. Two tests shall be performed. Test 1 shall simulate the edge condition with one end having crosswise restraint and other end free of crosswise restraint. The maximum span length for the edge condition shall be 750 mm. Test 2 shall simulate the interior condition with both ends free of crosswise restraint. The maximum span length for the interior condition shall be 1.5 m. External reinforcement, such as clamps on the ribs, may be installed to improve

uplift resistance. Bolts through seams shall not be installed.

1.6 DELIVERY AND STORAGE

Materials shall be delivered to the site in a dry and undamaged condition and stored out of contact with the ground. Materials shall be covered with weathertight coverings and kept dry. Storage conditions shall provide good air circulation and protection from surface staining.

1.7 WARRANTIES

The SSSMR system shall be warranted as outlined below. Any emergency temporary repairs conducted by the owner shall not negate the warranties.

1.7.1 Contractor's Weathertightness Warranty

The SSSMR system shall be warranted by the Contractor on a no penal sum basis for a period of five years against material and workmanship deficiencies; system deterioration caused by exposure to the elements and/or inadequate resistance to specified service design loads, water leaks, and wind uplift damage. The SSSMR system covered under this warranty shall include the entire roofing system including, but not limited to, the standing seam metal roof panels, fasteners, connectors, roof securement components, and assemblies tested and approved in accordance with ASTM E 1592. In addition, the system shall consist of panel finishes, slip sheet, insulation, vapor retarder, all accessories, components, and trim and all connections with roof panels. This includes roof penetration items such as vents, curbs, and skylights; interior or exterior gutters and downspouts; eaves, ridge, hip, valley, rake, gable, wall, or other roof system flashings installed and any other components specified within this contract to provide a weathertight roof system; and items specified in other sections of these specifications that are part of the SSSMR system. All material and workmanship deficiencies, system deterioration caused by exposure to the elements and/or inadequate resistance to specified design loads, water leaks and wind uplift damage shall be repaired as approved by the Contracting Officer. See the attached Contractor's required warranty for issue resolution of warrantable defects. This warranty shall warrant and cover the entire cost of repair or replacement, including all material, labor, and related markups. The Contractor shall supplement this warranty with written warranties from the installer and system manufacturer, which shall be submitted along with Contractor's warranty; however, the Contractor shall be ultimately responsible for this warranty. The Contractor's written warranty shall be as outlined in attached WARRANTY FOR STRUCTURAL STANDING SEAM METAL ROOF (SSSMR) SYSTEM, and shall start upon final acceptance of the facility. It is required that the Contractor provide a separate bond in an amount equal to the installed total roofing system cost in favor of the owner (Government) covering the Contractor's warranty responsibilities effective throughout the five year Contractor's warranty period for the entire SSSMR system as outlined above.

1.7.2 Manufacturer's Material Warranties.

The Contractor shall furnish, in writing, the following manufacturer's material warranties which cover all SSSMR system components such as roof panels, anchor clips and fasteners, flashing, accessories, and trim, fabricated from coil material:

a. A manufacturer's 20 year material warranty warranting that the aluminum, zinc-coated steel, aluminum-zinc alloy coated steel or

aluminum-coated steel as specified herein will not rupture, structurally fail, fracture, deteriorate, or become perforated under normal design atmospheric conditions and service design loads. Liability under this warranty shall be limited exclusively to the cost of either repairing or replacing nonconforming, ruptured, perforated, or structurally failed coil material.

b. A manufacturer's 20 year exterior material finish warranty on the factory colored finish warranting that the finish, under normal atmospheric conditions at the site, will not crack, peel, or delaminate; chalk in excess of a numerical rating of eight, as determined by ASTM D 4214 test procedures; or change color in excess of five CIE or Hunter Lab color difference (delta E) units in accordance with ASTM D 2244. Liability under this warranty is exclusively limited to refinishing with an air-drying version of the specified finish or replacing the defective coated material.

c. A roofing system manufacturer's 20 year, non-prorated, system weathertightness warranty.

1.8 COORDINATION MEETING

A coordination meeting shall be held 30 days prior to the first submittal, for mutual understanding of the Structural Standing Seam Metal Roof (SSSMR) System contract requirements. This meeting shall take place at the building site and shall include representatives from the Contractor, the roof system manufacturer, the roofing supplier, the erector, the SSSMR design engineer of record, and the Contracting Officer. All items required by paragraph SUBMITTALS shall be discussed, including applicable standard manufacturer shop drawings, and the approval process. The Contractor shall coordinate time and arrangements for the meeting.

PART 2 PRODUCTS

2.1 ROOF PANELS

Panels shall be steel and shall have a factory color finish. Length of sheets shall be sufficient to cover the entire length of any unbroken roof slope for slope lengths that do not exceed 9 m. When length of run exceeds 9 m and panel laps are provided, each sheet in the run shall extend over three or more supports. Sheets longer than 30 m may be furnished if approved by the Contracting Officer. Width of sheets shall provide not more than 600 mm of coverage in place. SSSMR system with roofing panels greater than 300 mm in width shall have standing seams rolled during installation by an electrically driven seaming machine. Height of standing seams shall be not less than 60 mm for rolled seam and 45 mm for seams that are not rolled.

2.1.1 Steel Panels

Steel panels shall be zinc-coated steel conforming to ASTM A 653/A 653M; aluminum-zinc alloy coated steel conforming to ASTM A 792/A 792M, AZ 50 coating; or aluminum-coated steel conforming to ASTM A 463/A 463M, Type 2, coating designation T2 65. Zinc, zinc-aluminum alloy or aluminum coated panels shall be 0.584 mm thick minimum. Panels shall be within 95 percent of reported tested thickness as noted in wind uplift resistance testing required in paragraph PERFORMANCE REQUIREMENTS. Panels that have become wet during shipment and have started to oxidize shall be rejected.

2.2 CONCEALED ANCHOR CLIPS

Concealed anchor clips shall be the same as the tested roofing system. Clip bases shall have factory punched or drilled holes for attachment. Clips shall be made from multiple pieces with the allowance for the total thermal movement required to take place within the clip. Single piece clips may be acceptable when the manufacturer can substantiate that the system can accommodate the thermal cyclic movement under sustained live or snow loads.

2.3 ACCESSORIES

Flashing, trim, metal closure strips, caps and similar metal accessories shall be the manufacturer's standard products. Exposed metal accessories shall be finished to match the panels furnished. Die cast metal closures shall be installed with double bead tape sealant and fasteners that stitch the panel to a 2 mm preformed backer plate to ensure a positive compression of the tape sealant. The use of a continuous angle butted to the panel ends to form a closure will not be allowed.

2.4 FASTENERS

Fasteners for steel roof panels shall be zinc-coated steel, aluminum, corrosion resisting steel, or nylon capped steel, type and size specified below or as otherwise approved for the applicable requirements. Fasteners for aluminum roof panels shall be aluminum or corrosion resisting steel. Fasteners for structural connections shall provide both tensile and shear ultimate strengths of not less than 3340 N per fastener. Fasteners for accessories shall be the manufacturer's standard. Exposed roof fasteners shall be sealed or have sealed washers on the exterior side of the roof to waterproof the fastener penetration. Washer material shall be compatible with the roofing; have a minimum diameter of 10 mm for structural connections; and gasketed portion of fasteners or washers shall be neoprene or other equally durable elastomeric material approximately 3 mm thick. Exposed fasteners for factory color finished panels shall be factory finished to match the color of the panels.

2.4.1 Screws

Screws for attaching anchor devices shall be not less than No. 14. Actual screw pull out test results shall be performed for the actual material gage and yield strength of the structural purlins or subpurlins to which the clip is to be anchored/attached. Other screws shall be as recommended by the manufacturer to meet the strength design requirements of the panels.

2.4.2 Bolts

Bolts shall be not less than 6 mm diameter, shouldered or plain shank as required, with locking washers and nuts.

2.4.3 Structural Blind Fasteners

Blind screw-type expandable fasteners shall be not less than 6 mm diameter. Blind (pop) rivets shall be not less than 7 mm minimum diameter.

2.5 SUBPURLINS

Cold formed supporting structural members/subpurlins shall have a minimum thickness of 1.5 mm and a minimum tensile yield strength of 345 MPa. Hot

rolled structural members shall have a minimum thickness of 6 mm and a minimum tensile yield strength of 248 MPa. Subpurlins shall be shop painted.

2.6 FACTORY COLOR FINISH

Panels shall have a factory applied polyvinylidene fluoride finish on the exposed side. The exterior finish shall consist of a baked-on topcoat with an appropriate prime coat. Color shall match the color indicated in Section 09 06 90 COLOR SCHEDULE. The exterior coating shall be a nominal 0.050 mm thickness consisting of a topcoat of not less than 0.018 mm dry film thickness and the paint manufacturer's recommended primer of not less than 0.005 mm thickness. The interior color finish shall consist of the same coating and dry film thickness as the exterior a nominal 0.025 mm thick finish otherwise the same as the exterior, 0.005 mm thick prime coat. The exterior color finish shall meet the test requirements specified below.

2.6.1 Salt Spray Test

A sample of the sheets shall withstand a cyclic corrosion test for a minimum of 2016 hours in accordance with ASTM D 5894, including the scribe requirement in the test. Immediately upon removal of the panel from the test, the coating shall receive a rating of not less than 10, no blistering, as determined by ASTM D 714; 10, no rusting, as determined by ASTM D 610; and a rating of 6, over 2 0 to 3.0 mm failure at scribe, as determined by ASTM D 1654.

2.6.2 Formability Test

When subjected to testing in accordance with ASTM D 522 Method B, 3 mm diameter mandrel, the coating film shall show no evidence of cracking to the naked eye.

2.6.3 Accelerated Weathering, Chalking Resistance and Color Change

A sample of the sheets shall be tested in accordance with ASTM G 154, test condition UVA-340 lamp, 8h UV at 60 degrees C followed by 4h CON at 45 degrees C] for 12 total hours. The coating shall withstand the weathering test without cracking, peeling, blistering, loss of adhesion of the protective coating, or corrosion of the base metal. Protective coating with an adhesion rating less than 4B when tested in accordance with ASTM D 3359, Test Method B, shall be considered as an area indicating loss of adhesion. Following the accelerated weathering test, the coating shall have a chalk rating not less than No. 8 in accordance with ASTM D 4214 test procedures, and the color change shall not exceed 5 CIE or Hunter Lab color difference (delta E) units in accordance with ASTM D 2244.

2.6.4 Humidity Test

When subjected to a humidity cabinet test in accordance with ASTM D 2247 for 1000 hours, a scored panel shall show no signs of blistering, cracking, creepage or corrosion.

2.6.5 Impact Resistance

Factory-painted sheet shall withstand direct and reverse impact in accordance with ASTM D 2794 13 mm diameter hemispherical head indenter, equal to 6.7 times the metal thickness in mm, expressed in Newton-meters, with no cracking.

2.6.6 Abrasion Resistance Test

When subjected to the falling sand test in accordance with ASTM D 968, Method A, the coating system shall withstand a minimum of 80 liters of sand before the appearance of the base metal. The term "appearance of base metal" refers to the metallic coating on steel or the aluminum base metal.

2.6.7 Specular Gloss

Finished roof surfaces shall have a specular gloss value of 10 or less at an angle of 85 degrees when measured in accordance with ASTM D 523.

2.6.8 Pollution Resistance

Coating shall show no visual effects when covered spot tested in a 10 percent hydrochloric acid solution for 24 hours in accordance with ASTM D 1308.

2.7 INSULATION

Thermal resistance of insulation shall be not less than the R-values shown on the contract drawings. R-values shall be R=3.5 sq m - C/Watt (R=20) for walls; and R=5.5 sq m - C/Watt (R=30) for roofs. Insulation shall be a standard product with the insulation manufacturer, factory marked or identified with insulation manufacturer's name or trademark and R-value. Identification shall be on individual pieces or individual packages. Blanket insulation shall have a facing as specified in paragraph VAPOR RETARDER. Insulation, including facings, shall have a flame spread not in excess of 75 and a smoke developed rating not in excess of 150 when tested in accordance with ASTM E 84. The stated R-value of the insulation shall be certified by an independent Registered Professional Engineer if tests are conducted in the insulation manufacturer's laboratory. Contractor shall comply with EPA requirements in accordance with Section 01 62 35 RECYCLED / RECOVERED MATERIALS.

2.7.1 Polyisocyanurate Rigid Board Insulation

Polyisocyanurate insulation for use above a roof deck shall conform to ASTM C 1289, Type II, (having a minimum recovered material content of 85 percent by weight of core material in the polyisocyanurate portion). For impermeable faced polyisocyanurate (Ex: aluminum foil), the maximum design R-value per 25 mm of insulation used shall be 1.27. Facings shall be non-asphaltic, glass fiber reinforced.

2.7.2 Blanket Insulation

Blanket insulation shall conform to ASTM C 991.

2.7.3 Glass Mat Gypsum Roof Board

Glass mat gypsum roof board for use above the deck or insulation for thermal protection shall have a flame spread - 0, smoke developed - 0, shall be water resistant and have a compressive strength of 3.4 kPa. Glass mat gypsum roof board shall conform to ASTM C 1177/C 1177M.

2.8 INSULATION RETAINERS

Insulation retainers shall be type, size, and design necessary to

adequately hold the insulation and to provide a neat appearance. Metallic retaining members shall be nonferrous or have a nonferrous coating. Nonmetallic retaining members, including adhesives used in conjunction with mechanical retainers or at insulation seams, shall have a fire resistance classification not less than that permitted for the insulation.

2.9 SEALANT

Sealants shall be elastomeric type containing no oil or asphalt. Exposed sealant shall be colored to match the applicable building color and shall cure to a rubberlike consistency. Sealant placed in the roof panel standing seam ribs shall be provided in accordance with the manufacturer's recommendations.

2.10 GASKETS AND INSULATING COMPOUNDS

Gaskets and insulating compounds shall be nonabsorptive and suitable for insulating contact points of incompatible materials. Insulating compounds shall be nonrunning after drying.

2.11 VAPOR RETARDER

2.11.1 Vapor Retarders as Integral Facing

Insulation facing shall have a permeability of 5.7 ng per Pa-second-square meter or less when tested in accordance with ASTM E 96/E 96M. Facing shall be white. Facings and finishes shall be factory applied.

2.11.2 Vapor Retarders Separate from Insulation

Vapor retarder material shall be polyethylene sheeting conforming to ASTM D 4397. A single ply of 0.25 mm polyethylene sheet; or, at the Contractor's option, a double ply of 0.15 mm polyethylene sheet shall be used. A fully compatible polyethylene tape which has equal or better water vapor control characteristics than the vapor retarder material shall be provided. A cloth industrial duct tape in a utility grade shall also be provided to use as needed to protect the vapor retarder from puncturing.

2.11.3 Slip Sheet for Use With Vapor Retarder

Slip sheet for use with vapor retarder shall be a 0.24 kg per square meter rosin-sized, unsaturated building paper.

2.12 EPDM RUBBER BOOTS

Flashing devices around pipe penetrations shall be flexible, one-piece devices molded from weather-resistant EPDM rubber. Rubber boot material shall be as recommended by the manufacturer. The boots shall have base rings made of aluminum or corrosion resisting steel that conform to the contours of the roof panel to form a weather-tight seal.

2.13 PREFABRICATED CURBS AND EQUIPMENT SUPPORTS

Prefabricated curbs and equipment supports shall be of structural quality, hot-dipped galvanized or galvanized sheet steel, factory primed and prepared for painting with mitered and welded joints. Integral base plates and water diverter crickets shall be provided. Minimum height of curb shall be 200 mm above finish roof. Curbs shall be constructed to match roof slope and to provide a level top surface for mounting of equipment.

Curb flange shall be constructed to match configuration of roof panels. Curb size shall be coordinated, prior to curb fabrication, with the mechanical equipment to be supported. Strength requirements for equipment supports shall be coordinated to include all anticipated loads. Flashings shall not be rigidly attached to underline structure.

PART 3 EXECUTION

3.1 INSTALLATION

Installation shall be in accordance with the manufacturer's erection instructions and drawings. Dissimilar materials which are not compatible when contacting each other shall be insulated by means of gaskets or insulating compounds. Molded closure strips shall be installed wherever roofing sheets terminate in open-end configurations, exclusive of flashings. The closure strip installation shall be weather-tight and sealed. Screws shall be installed with a clutching screw gun, to assure screws are not stripped. Field test shall be conducted on each gun prior to starting installation and periodically thereafter to assure it is adjusted properly to install particular type and size of screw as recommended by manufacturer's literature. Improper or mislocated drill holes shall be plugged with an oversize screw fastener and gasketed washer; however, sheets with an excess of such holes or with such holes in critical locations shall not be used. Exposed surfaces and edges shall be kept clean and free from sealant, metal cuttings, hazardous burrs, and other foreign material. Stained, discolored, or damaged sheets shall be removed from the site.

3.1.1 Field Forming of Panels for Unique Area

When roofing panels are formed from factory-color-finished steel coils at the project site, the same care and quality control measures that are taken in shop forming of roofing panels shall be observed. Rollformer shall be operated by the metal roofing manufacturer's representative. In cold weather conditions, preheating of the steel coils to be field formed shall be performed as necessary just prior to the rolling operations.

3.1.2 Subpurlins

Unless otherwise shown, subpurlins shall be anchored to the purlins or other structural framing members with bolts or screws. Attachment to the substrate (when provided) or to the panels is not permitted. The subpurlin spacing shall not exceed 750 mm on centers at the corner, edge and ridge zones, and 1500 mm maximum on centers for the remainder of the roof. Corner, edge, and ridge zones are as defined in ASCE 7.

3.1.3 Roof Panel Installation

Roof panels shall be installed with the standing seams in the direction of the roof slope. The side seam connections for installed panels shall be completed at the end of each day's work. Method of applying joint sealant shall conform to the manufacturer's recommendation to achieve a complete weather-tight installation. End laps of panels shall be provided in accordance with the manufacturer's instructions. Closures, flashings, EPDM rubber boots, roof curbs, and related accessories shall be installed according to the manufacturer's drawings. Fasteners shall not puncture roofing sheets except as provided for in the manufacturer's instructions for erection and installation. Expansion joints for the standing seam roof system shall be installed at locations indicated on the contract drawings

and other locations indicated on the manufacturer's drawings.

3.1.4 Concealed Anchor Clips

Concealed anchor clips shall be fastened directly to the structural framing members. Attachment to the substrate (when provided) or to the metal deck is not permitted. The maximum distance, parallel to the seams, between clips shall be 750 mm on center at the corner, edge, and ridge zones, and 1500 mm maximum on centers for the remainder of the roof.

3.2 INSULATION INSTALLATION

Insulation shall be continuous over entire roof surface. Where expansion joints, terminations, and other connections are made, the cavity shall be filled with batt insulation with vapor retarder providing equivalent R-value and perm rating as remaining insulation. Insulation shall be installed as indicated and in accordance with manufacturer's instructions.

3.2.1 Blanket Insulation

Blanket insulation shall be installed between and parallel to the purlins with tabs of a facer lapping on the top face of the purlins. Thermal blocks shall be provided over purlins, between clips. A second layer of unfaced insulation shall be added between purlins to provide full R-value. Blanket insulation shall be supported by an integral facing or other commercially available support system.

3.3 PROTECTION OF VAPOR RETARDER FROM ROOF DECK

A cloth industrial duct tape shall be applied over the seams of metal roof decks, at penetration edges, and at surface areas exhibiting sharp burrs or similar protrusions. For other types of roof decks, cloth industrial duct tape shall be applied over irregularities which could potentially puncture polyethylene membrane.

3.4 VAPOR RETARDER INSTALLATION

3.4.1 Integral Facing on Blanket Insulation

Integral facing on blanket insulation shall have the facing lapped and sealed with a compatible tape to provide a vapor tight membrane.

3.5 SLIP SHEET INSTALLATION

A slip sheet shall be laid over the blanket insulation facing to prevent the vinyl facing from adhering to the metal roofing.

3.6 CLEANING AND TOUCH-UP

Exposed SSSMR systems shall be cleaned at completion of installation. Debris that could cause discoloration and harm to the panels, flashings, closures and other accessories shall be removed. Grease and oil films, excess sealants, and handling marks shall be removed and the work shall be scrubbed clean. Exposed metal surfaces shall be free of dents, creases, waves, scratch marks, and solder or weld marks. Immediately upon detection, abraded or corroded spots on shop-painted surfaces shall be wire brushed and touched up with the same material used for the shop coat. Factory color finished surfaces shall be touched up with the manufacturer's recommended touch up paint.

CONTRACTOR'S FIVE (5) YEAR NO PENAL SUM WARRANTY
FOR
STRUCTURAL STANDING SEAM METAL ROOF (SSSMR) SYSTEM

FACILITY DESCRIPTION_____

BUILDING NUMBER:_____

CORPS OF ENGINEERS CONTRACT NUMBER:_____

CONTRACTOR

CONTRACTOR:_____

ADDRESS:_____

POINT OF CONTACT:_____

TELEPHONE NUMBER:_____

OWNER

OWNER:_____

ADDRESS:_____

POINT OF CONTACT:_____

TELEPHONE NUMBER:_____

CONSTRUCTION AGENT

CONSTRUCTION AGENT:_____

ADDRESS:_____

POINT OF CONTACT:_____

TELEPHONE NUMBER:_____

CONTRACTOR'S FIVE (5) YEAR NO PENAL SUM WARRANTY
FOR
STRUCTURAL STANDING SEAM METAL ROOF (SSSMR) SYSTEM
(continued)

THE SSSMR SYSTEM INSTALLED ON THE ABOVE NAMED BUILDING IS WARRANTED BY _____ FOR A PERIOD OF FIVE (5) YEARS AGAINST WORKMANSHIP AND MATERIAL DEFICIENCES, WIND DAMAGE, STRUCTURAL FAILURE, AND LEAKAGE. THE SSSMR SYSTEM COVERED UNDER THIS WARRANTY SHALL INCLUDE, BUT SHALL NOT BE LIMITED TO, THE FOLLOWING: THE ENTIRE ROOFING SYSTEM, MANUFACTURER SUPPLIED FRAMING AND STRUCTURAL MEMBERS, METAL ROOF PANELS, FASTENERS, CONNECTORS, ROOF SECUREMENT COMPONENTS, AND ASSEMBLIES TESTED AND APPROVED IN ACCORDANCE WITH ASTM E 1592. IN ADDITION, THE SYSTEM PANEL FINISHES, SLIP SHEET, INSULATION, VAPOR RETARDER, ALL ACCESSORIES, COMPONENTS, AND TRIM AND ALL CONNECTIONS ARE INCLUDED. THIS INCLUDES ROOF PENETRATION ITEMS SUCH AS VENTS, CURBS, SKYLIGHTS; INTERIOR OR EXTERIOR GUTTERS AND DOWNSPOUTS; EAVES, RIDGE, HIP, VALLEY, RAKE, GABLE, WALL, OR OTHER ROOF SYSTEM FLASHINGS INSTALLED AND ANY OTHER COMPONENTS SPECIFIED WITHIN THIS CONTRACT TO PROVIDE A WEATHERTIGHT ROOF SYSTEM; AND ITEMS SPECIFIED IN OTHER SECTIONS OF THE SPECIFICATIONS THAT ARE PART OF THE SSSMR SYSTEM.

ALL MATERIAL DEFICIENCIES, WIND DAMAGE, STRUCTURAL FAILURE, AND LEAKAGE ASSOCIATED WITH THE SSSMR SYSTEM COVERED UNDER THIS WARRANTY SHALL BE REPAIRED AS APPROVED BY THE CONTRACTING OFFICER. THIS WARRANTY SHALL COVER THE ENTIRE COST OF REPAIR OR REPLACEMENT, INCLUDING ALL MATERIAL, LABOR, AND RELATED MARKUPS. THE ABOVE REFERENCED WARRANTY COMMENCED ON THE DATE OF FINAL ACCEPTANCE ON _____ AND WILL REMAIN IN EFFECT FOR STATED DURATION FROM THIS DATE.

SIGNED, DATED, AND NOTARIZED (BY COMPANY PRESIDENT)

_____

(Company President) (Date)

CONTRACTOR'S FIVE (5) YEAR NO PENAL SUM WARRANTY
FOR
STRUCTURAL STANDING SEAM METAL ROOF (SSSMR) SYSTEM
(continued)

THE CONTRACTOR SHALL SUPPLEMENT THIS WARRANTY WITH WRITTEN WARRANTIES FROM THE MANUFACTURER AND/OR INSTALLER OF THE SSSMR SYSTEM, WHICH SHALL BE SUBMITTED ALONG WITH THE CONTRACTOR'S WARRANTY. HOWEVER, THE CONTRACTOR WILL BE ULTIMATELY RESPONSIBLE FOR THIS WARRANTY AS OUTLINED IN THE SPECIFICATIONS AND AS INDICATED IN THIS WARRANTY EXAMPLE.

EXCLUSIONS FROM COVERAGE

1. NATURAL DISASTERS, ACTS OF GOD (LIGHTNING, FIRE, EXPLOSIONS, SUSTAINED WIND FORCES IN EXCESS OF THE DESIGN CRITERIA, EARTHQUAKES, AND HAIL).

2. ACTS OF NEGLIGENCE OR ABUSE OR MISUSE BY GOVERNMENT OR OTHER PERSONNEL, INCLUDING ACCIDENTS, VANDALISM, CIVIL DISOBEDIENCE, WAR, OR DAMAGE CAUSED BY FALLING OBJECTS.

3. DAMAGE BY STRUCTURAL FAILURE, SETTLEMENT, MOVEMENT, DISTORTION, WARPAGE, OR DISPLACEMENT OF THE BUILDING STRUCTURE OR ALTERATIONS MADE TO THE BUILDING.

4. CORROSION CAUSED BY EXPOSURE TO CORROSIVE CHEMICALS, ASH OR FUMES GENERATED OR RELEASED INSIDE OR OUTSIDE THE BUILDING FROM CHEMICAL PLANTS, FOUNDRIES, PLATING WORKS, KILNS, FERTILIZER FACTORIES, PAPER PLANTS, AND THE LIKE.

5. FAILURE OF ANY PART OF THE SSSMR SYSTEM DUE TO ACTIONS BY THE OWNER TO INHIBIT FREE DRAINAGE OF WATER FROM THE ROOF AND GUTTERS AND DOWNSPOUTS OR ALLOW PONDING WATER TO COLLECT ON THE ROOF SURFACE. CONTRACTOR'S DESIGN SHALL INSURE FREE DRAINAGE FROM THE ROOF AND NOT ALLOW PONDING WATER.

6. THIS WARRANTY APPLIES TO THE SSSMR SYSTEM. IT DOES NOT INCLUDE ANY CONSEQUENTIAL DAMAGE TO THE BUILDING INTERIOR OR CONTENTS WHICH IS COVERED BY THE WARRANTY OF CONSTRUCTION CLAUSE INCLUDED IN THIS CONTRACT.

7. THIS WARRANTY CANNOT BE TRANSFERRED TO ANOTHER OWNER WITHOUT WRITTEN CONSENT OF THE CONTRACTOR; AND THIS WARRANTY AND THE CONTRACT PROVISIONS WILL TAKE PRECEDENCE OVER ANY CONFLICTS WITH STATE STATUTES.

**

CONTRACTOR'S FIVE (5) YEAR NO PENAL SUM WARRANTY
FOR
STRUCTURAL STANDING SEAM METAL ROOF (SSSMR) SYSTEM
(continued)

**REPORTS OF LEAKS AND SSSMR SYSTEM DEFICIENCIES SHALL BE RESPONDED TO WITHIN 48 HOURS OF RECEIPT OF NOTICE, BY TELEPHONE OR IN WRITING, FROM EITHER THE OWNER OR CONTRACTING OFFICER. EMERGENCY REPAIRS TO PREVENT FURTHER ROOF LEAKS SHALL BE INITIATED IMMEDIATELY; A WRITTEN PLAN SHALL BE SUBMITTED FOR APPROVAL TO REPAIR OR REPLACE THIS SSSMR SYSTEM WITHIN SEVEN (7) CALENDAR DAYS. ACTUAL WORK FOR PERMANENT REPAIRS OR REPLACEMENT SHALL BE STARTED WITHIN 30 DAYS AFTER RECEIPT OF NOTICE, AND COMPLETED WITHIN A REASONABLE TIME FRAME. IF THE CONTRACTOR FAILS TO ADEQUATELY RESPOND TO THE WARRANTY PROVISIONS, AS STATED IN THE CONTRACT AND AS CONTAINED HEREIN, THE CONTRACTING OFFICER MAY HAVE THE SSSMR SYSTEM REPAIRED OR REPLACED BY OTHERS AND CHARGE THE COST TO THE CONTRACTOR.

IN THE EVENT THE CONTRACTOR DISPUTES THE EXISTENCE OF A WARRANTABLE DEFECT, THE CONTRACTOR MAY CHALLENGE THE OWNER'S DEMAND FOR REPAIRS AND/OR REPLACEMENT DIRECTED BY THE OWNER OR CONTRACTING OFFICER EITHER BY REQUESTING A CONTRACTING OFFICER'S DECISION UNDER THE CONTRACT DISPUTES ACT, OR BY REQUESTING THAT AN ARBITRATOR RESOLVE THE ISSUE. THE REQUEST FOR AN ARBITRATOR MUST BE MADE WITHIN 48 HOURS OF BEING NOTIFIED OF THE DISPUTED DEFECTS. UPON BEING INVOKED, THE PARTIES SHALL, WITHIN TEN (10) DAYS, JOINTLY REQUEST A LIST OF FIVE (5) ARBITRATORS FROM THE FEDERAL MEDIATION AND CONCILIATION SERVICE. THE PARTIES SHALL CONFER WITHIN TEN (10) DAYS AFTER RECEIPT OF THE LIST TO SEEK AGREEMENT ON AN ARBITRATOR. IF THE PARTIES CANNOT AGREE ON AN ARBITRATOR, THE CONTRACTING OFFICER AND THE PRESIDENT OF THE CONTRACTOR'S COMPANY WILL STRIKE ONE (1) NAME FROM THE LIST ALTERNATIVELY UNTIL ONE (1) NAME REMAINS. THE REMAINING PERSON SHALL BE THE DULY SELECTED ARBITRATOR. THE COSTS OF THE ARBITRATION, INCLUDING THE ARBITRATOR'S FEE AND EXPENSES, COURT REPORTER, COURTROOM OR SITE SELECTED, ETC., SHALL BE BORNE EQUALLY BETWEEN THE PARTIES. EITHER PARTY DESIRING A COPY OF THE TRANSCRIPT SHALL PAY FOR THE TRANSCRIPT. A HEARING WILL BE HELD AS SOON AS THE PARTIES CAN MUTUALLY AGREE. A WRITTEN ARBITRATOR'S DECISION WILL BE REQUESTED NOT LATER THAN 30 DAYS FOLLOWING THE HEARING. THE DECISION OF THE ARBITRATOR WILL NOT BE BINDING; HOWEVER, IT WILL BE ADMISSIBLE IN ANY SUBSEQUENT APPEAL UNDER THE CONTRACT DISPUTES ACT.

A FRAMED COPY OF THIS WARRANTY SHALL BE POSTED IN THE MECHANICAL ROOM OR OTHER APPROVED LOCATION DURING THE ENTIRE WARRANTY PERIOD.

-- End of Section --

SECTION 07600

SHEET METALWORK, GENERAL

PART 1 GENERAL

1.1 REFERENCES

The publications listed below form a part of this specification to the extent referenced. The publications are referred to in the text by basic designation only.

ASTM INTERNATIONAL (ASTM)

ASTM D 543	(1995) Evaluating the Resistance of Plastics to Chemical Reagents
ASTM D 822	(1996) Conducting Tests on Paint and Related Coatings and Materials Using Filtered Open-Flame Carbon-Arc Exposure Apparatus
ASTM D 828	(1997) Tensile Properties of Paper and Paperboard Using Constant-Rate-of-Elongation-Apparatus
ASTM E 96	(2000e1) Water Vapor Transmission of Materials

SHEET METAL AND AIR CONDITIONING CONTRACTORS' NATIONAL ASSOCIATION (SMACNA)

SMACNA Arch. Manual	(1993; Errata; Addenda Oct 1997) Architectural Sheet Metal Manual

1.2 GENERAL REQUIREMENTS

Sheet metalwork shall be accomplished to form weathertight construction without waves, warps, buckles, fastening stresses or distortion, and shall allow for expansion and contraction. Cutting, fitting, drilling, and other operations in connection with sheet metal required to accommodate the work of other trades shall be performed by sheet metal mechanics. Installation of sheet metal items used in conjunction with roofing shall be coordinated with roofing work to permit continuous roofing operations. Sheet metalwork pertaining to heating, ventilating, and air conditioning is specified in Division 15 section.

1.3 SUBMITTALS

Government approval is required for submittals with a "G" designation; submittals not having a "G" designation are for information only. When used, a designation following the "G" designation identifies the office that will review the submittal for the Government. Submit the following in accordance with Section 01330 SUBMITTAL PROCEDURES:

SD-02 Shop Drawings

Covering on flat, sloped, or curved surfaces; G AED

Gutters; G AED

Downspouts; G AED

Expansion joints; G AED

Gravel stops and fascias; G AED

Splash pans; G AED

Flashing for roof drains; G AED

Base flashing; G AED

Counterflashing; G AED

Flashing at roof penetrations; G AED

Reglets; G AED

Scuppers; G AED

Copings; G AED

Drip edge; G AED

Conductor heads

Open valley flashing; G AED

Eave flashing; G AED

Indicate thicknesses, dimensions, fastenings and anchoring methods, expansion joints, and other provisions necessary for thermal expansion and contraction. Scaled manufacturer's catalog data may be submitted for factory fabricated items.

1.4 DELIVERY, STORAGE, AND HANDLING

Materials shall be adequately packaged and protected during shipment and shall be inspected for damage, dampness, and wet-storage stains upon delivery to the jobsite. Materials shall be clearly labeled as to type and manufacturer. Sheet metal items shall be carefully handled to avoid damage. Materials shall be stored in dry, ventilated areas until immediately before installation.

PART 2 PRODUCTS

2.1 MATERIALS

Lead, and lead-coated metal shall not be used. Any metal listed by SMACNA Arch. Manual for a particular item may be used, unless otherwise specified or indicated. Materials shall conform to the requirements specified below and to the thicknesses and configurations established in SMACNA Arch. Manual. Different items need not be of the same metal, except that if copper is selected for any exposed item, all exposed items shall be

copper.

Acceptable materials for flashing include, but are not limited to:

1. Galvanized steel.
2. Stainless steel.
3. Copper.
4. Aluminum.
5. Zinc.

2.1.1 Accessories

Accessories and other items essential to complete the sheet metal installation, though not specifically indicated or specified, shall be provided.

2.1.2 Sealant

Unless otherwise specified, sealant shall be an elastomeric weather resistant sealant as specified in Section 07900 JOINT SEALING.

2.1.3 Fasteners

Fasteners shall be compatible with the fastened material and shall be the type best suited for the application.

2.1.4 Felt

Asphalt saturated, organic felt, Type I.

2.1.5 Stainless Steel

Type 302 or 304; fully annealed, dead soft temper.

2.1.6 Solder

95-5 tin-antimony.

2.1.7 Through-Wall Flashing

a. Stainless steel, Type 304, not less than 0.25 mm thick, completely encased by and permanently bonded on both sides to 23 kg high strength bituminized crepe kraft paper, using hot asphalt, heat, and pressure.

b. Nonreinforced, waterproof, impermeable extruded elastomeric single ply sheeting not less than 0.76 mm thick.

c. Other through-wall flashing material may be used provided the following performance criteria are met.

(1) No cracking or flaking when bent 180 degrees over a 0.8 mm mandrel and rebent at the same point over the same mandrel in an opposite direction at 0 degree C .

(2) Water vapor permeability not more than 115 ng per Paper second per square meter (2 perms) when tested in accordance with ASTM E 96.

(3) Minimum breaking strength of 24 kgf/15 mm width in the weakest direction when tested in accordance with ASTM D 828.

(4) No visible deterioration after being subjected to a 400-hour direct weathering test in accordance with ASTM D 822.

(5) No shrinkage in length or width and less than 5 percent loss of breaking strength after a 10-day immersion, per ASTM D 543, in 5 percent (by weight) solutions, respectively, of sulfuric acid, hydrochloric acid, sodium hydroxide or saturated lime (calcium hydroxide).

PART 3 EXECUTION

3.1 GENERAL REQUIREMENTS

Gutters and downspouts shall be designed and fabricated in conformance with SMACNA Arch. Manual;and louvers shall be fabricated in conformance with SMACNA Arch. Manual and as indicated. Unless otherwise specified or indicated, exposed edges shall be folded back to form a 13 mm (1/2 inch) hem on the concealed side, and bottom edges of exposed vertical surfaces shall be angled to form drips. Bituminous cement shall not be placed in contact with roofing membranes other than built-up roofing.

3.2 EXPANSION JOINTS

Expansion joints shall be provided as specified in SMACNA Arch. Manual. Expansion joints in continuous sheet metal shall be provided at 12.0 meter intervals for stainless steel. Joints shall be evenly spaced. An additional joint shall be provided where the distance between the last expansion joint and the end of the continuous run is more than half the required interval spacing.

3.3 PROTECTION OF ALUMINUM

Aluminum shall not be used where it will be in contact with copper or where it will contact water which flows over copper surfaces.

3.3.1 Paint

Aluminum surfaces shall be solvent cleaned and given one coat of zinc-molybdate primer and one coat of aluminum paint as specified in Section 09900 PAINTING, GENERAL.

3.3.2 Nonabsorptive Tape or Gasket

Nonabsorptive tape or gasket shall be placed between the adjoining surfaces and cemented to the aluminum surface using a cement compatible with aluminum.

3.4 CONNECTIONS AND JOINTING

3.4.1 Soldering

Soldering shall apply to copper, and stainless steel items. Edges of sheet metal shall be pretinned before soldering is begun. Soldering shall be done slowly with well heated soldering irons so as to thoroughly heat the seams and completely sweat the solder through the full width of the seam. Edges of stainless steel to be pretinned shall be treated with soldering

acid flux. Soldering shall follow immediately after application of the flux. Upon completion of soldering, the acid flux residue shall be thoroughly cleaned from the sheet metal with a water solution of washing soda and rinsed with clean water.

3.4.2 Riveting

Joints in aluminum sheets 1.0 mm or less in thickness shall be mechanically made.

3.4.3 Seaming

Flat-lock and soldered-lap seams shall finish not less than 25 mm wide. Unsoldered plain-lap seams shall lap not less than 75 mm unless otherwise specified. Flat seams shall be made in the direction of the flow.

3.5 CLEATS

A continuous cleat shall be provided where indicated or specified to secure loose edges of the sheet metalwork. Butt joints of cleats shall be spaced approximately 3 mm apart. The cleat shall be fastened to supporting wood construction with nails evenly spaced not over 300 mm on centers. Where the fastening is to be made to concrete or masonry, screws shall be used and shall be driven in expansion shields set in concrete or masonry.

3.6 GUTTERS AND DOWNSPOUTS

Gutters and downspouts shall be installed as indicated. Gutters shall be supported by continuous cleats or by cleats spaced not less than 915 mm (36 inches) apart. Downspouts shall be rigidly attached to the building. Supports for downspouts shall be spaced according to manufacturer's recommendations.

3.7 FLASHINGS

Flashings shall be installed at locations indicated and as specified below. Sealing shall be according to the flashing manufacturer's recommendations. Flashings shall be installed at intersections of roof with vertical surfaces and at projections through roof, except that flashing for heating and plumbing, including piping, roof, and floor drains, and for electrical conduit projections through roof or walls are specified in other sections. Except as otherwise indicated, counter flashings shall be provided over base flashings. Perforations in flashings made by masonry anchors shall be covered up by an application of bituminous plastic cement at the perforation. Flashing shall be installed on top of joint reinforcement. Flashing shall be formed to direct water to the outside of the system.

3.7.1 Through-Wall Flashing

Through-wall flashing includes sill, lintel, and spandrel flashing. The flashing shall be laid with a layer of mortar above and below the flashing so that the total thickness of the two layers of the mortar and flashing are the same thickness as the regular mortar joints. Flashing shall not extend further into the masonry backup wall than the first mortar joint. Joints in flashing shall be lapped and sealed. Flashing shall be one piece for lintels and sills.

3.7.1.1 Lintel Flashing

Lintel flashing shall extend the full length of lintel. Flashing shall extend through the wall one masonry course above the lintels and shall be bent down over the vertical leg of the outer steel lintel angle not less than 50 mm, or shall be applied over top of masonry and precast concrete lintels. Bedjoints of lintels at control joints shall be underlaid with sheet metal bond breaker.

3.7.1.2 Sill Flashing

Sill flashing shall extend the full width of the sill and not less than 100 mm beyond ends of sill except at control joint where the flashing shall be terminated at the end of the sill.

3.8 SCUPPERS

Parapet Scuppers: Fabricate scuppers of dimensions required with closure flange trim to exterior, 100-mm- wide wall flanges to interior, and base extending 100 mm beyond cant or tapered strip into field of roof. Fasten gravel guard angles to base of scupper. Scuppers shall be made with minimum 0.8 mm thick material.

3.9 INSTALLATION OF LOUVERS

Louvers shall be rigidly attached to the supporting construction. The installation shall be rain-tight. Louver screen shall be installed as indicated.

3.10 CONTRACTOR QUALITY CONTROL

The Contractor shall establish and maintain a quality control procedure for sheet metal used in conjunction with roofing to assure compliance of the installed sheet metalwork with the contract requirements. Any work found not to be in compliance with the contract shall be promptly removed and replaced or corrected in an approved manner. Quality control shall include, but not be limited to, the following:

a. Observation of environmental conditions; number and skill level of sheet metal workers; condition of substrate.

b. Verification of compliance of materials before, during, and after installation.

c. Inspection of sheet metalwork for proper size and thickness, fastening and joining, and proper installation.

The actual quality control observations and inspections shall be documented and a copy of the documentation furnished to the Government at the end of each day.

-- End of Section --

SECTION 07720

RIDGE VENTS AND ROOF VENTILATORS

PART 1 GENERAL

1.1 REFERENCES

The publications listed below form a part of this specification to the extent referenced. The publications are referred to in the text by basic designation only.

ASTM INTERNATIONAL (ASTM)

ASTM A 653/A 653M	(2001a) Steel Sheet, Zinc-Coated (Galvanized) or Zinc-Iron Alloy-Coated (Galvannealed) by the Hot-Dip Process

SHEET METAL AND AIR CONDITIONING CONTRACTORS' NATIONAL ASSOCIATION (SMACNA)

SMACNA Arch. Manual	(1993; Errata; Addenda Oct 1997) Architectural Sheet Metal Manual

1.2 SUBMITTALS

Government approval is required for submittals with a "G" designation; submittals not having a "G" designation are for information only. When used, a designation following the "G" designation identifies the office that will review the submittal for the Government. The following shall be submitted in accordance with Section 01330 SUBMITTAL PROCEDURES:

SD-02 Shop Drawings

Roof Ventilators; G AED

Dimensioned drawings indicating location of each type of ventilator including details of construction, gauges of metal, and methods of operation of dampers and controls.

1.3 DESIGN REQUIREMENTS

Ventilators shall be designed for use with the specific type of project roofing system, and shall provide uniform and continuous air flow. Ventilator design shall provide protection against rain and snow, and shall be provided with a continuous weep along the bottom of both sides of wind band. Units shall be self-cleaning by the action of the elements, and shall have provisions for carrying water and normal wind-transported soil matter to the outside. Ventilators shall be free of internal obstructions or moving parts which will require maintenance, and shall be complete with type of mounting indicated on drawings.

1.4 PROJECT/SITE CONDITIONS

Rough openings shall be field-measured and recorded prior to fabrication

of roof ventilators. Fabrication shall be scheduled with construction schedule.

PART 2 PRODUCTS

2.1 MATERIALS

2.1.1 Galvanized Steel Sheets

Steel sheets shall be commercial quality, zinc-coated steel (hot-dip galvanized) of quality established by ASTM A 653/A 653M, minimum G90 coating thickness.

2.1.2 Ridge Vents

Roof ridge vent meant to vent the air space between the gypsum board and the corragated sheet metal roof (enclosing the mineral fiber insulation) shall be fabricated of galvanized steel of similar properties as the roof material. Size and shape as shown on drawings.

2.2 RIDGE VENTILATORS

Roof ridge ventilators shall be fabricated of galvanized steel, and shall be assembled to any desired length. Continuous-run ridge ventilators shall be connected with splice plates of type which will telescope together and not require fasteners, soldering or welding. Ventilators shall be provided with metal insect screening and suitable filter material to prevent dust penetration into the building. Dampers and airshafts shall be complete with urethane gasketing for extra-tight enclosures. Metal closure strips which match the panel roof rib contours shall be provided to close out weather and provide a secure seat for ventilators.

2.3 STATIONARY VENTILATORS

Stationary roof ventilators shall be fabricated of galvanized steel with weathercap, and shall have straight-through drainage for eliminating the possibility of air-borne debris collecting in the ventilator openings. Bird screens shall be provided.

2.4 TURBINE VENTILATORS

Turbine ventilators shall be fabricated of galvanized steel sheets, complete with sensitive ball-bearing action to enable the slightest motion of air to move the rotor head where suction is maintained at low wind velocities. Ventilators shall have 360 degree operating surface to assure access of wind currents regardless of wind velocities. Rotor head shall be anchored to prevent head from lifting or jumping off the rotor in high winds. Rotor crown plate shall be seamless. Birdscreens shall be provided.

2.4.1 Dampers

Where indicated on drawings. Turbine ventilators shall be provided with dampers manually-operated with direct pull-chain or rack and pinion.

2.4.2 Rotor Shaft

Rotor shaft bearings shall be entirely shielded in corrosion-resistant. Bearings shall be pre-lubricated and shall have life-time warranty. Bearings shall be at top and bottom to assure accurate alignment. Shaft

and bearings shall be easily replaceable as a unit. Rotor collar shall be rolled and welded.

2.5 FABRICATION

Welds, soldered seams, rivets and fasteners shall be clean, secure, watertight, and smooth. Edges shall be wired or beaded, where necessary, to ensure rigidity. Joints between sections shall be watertight and shall allow for expansion and contraction. Galvanic action between different metals in direct contact shall be prevented by nonconductive separators.

2.6 CURB BASES

Ventilator bases for curb-mounted installations shall be of size indicated on drawings, and shall be designed specifically for the type of ventilator and roofing system approved for this project. Curb bases shall be factory-formed and flashed for a watertight installation. Curb bases shall be fabricated of material and finish to match the ventilator.

2.7 SCREENS

Screens shall be furnished by ventilator manufacturer as part of ventilator assembly. Screen (with frames) shall be manufactured of material to match ventilators, and shall be designed to be easily removed for cleaning purposes.

2.8 FINISH

2.8.1 Galvanized Steel Finish

Galvanized steel roof ventilators shall be factory-coated with rust-resistant primer and field-painted in accordance with Section 09900 PAINTING, GENERAL.

PART 3 EXECUTION

3.1 PREPARATION

Rough openings and other roof conditions shall be prepared in accordance with approved shop drawings and manufacturer's recommendations. Before starting the ventilator work, surrounding roof surfaces shall be protected from damage.

3.2 INSTALLATION

Roof ventilator installation shall be coordinated with roofing work, and shall be installed in accordance with approved drawings and chapter 8 of SMACNA Arch. Manual. The ventilator installation shall be watertight and shall be free of vibration noise. Roof ventilators shall be cleaned in accordance with ventilator manufacturer's recommendations.

3.3 PROTECTION

Exposed ventilator finish surfaces shall be protected against the accumulation of paint, grime, mastic, disfigurement, discoloration and damage for duration of construction activities.

-- End of Section --

SECTION 07840

FIRESTOPPING

PART 1 GENERAL

1.1 REFERENCES

The publications listed below form a part of this specification to the extent referenced. The publications are referred to within the text by the basic designation only.

ASTM INTERNATIONAL (ASTM)

ASTM E 814	(2002) Fire Tests of Through-Penetration Fire Stops
ASTM E 84	(2004) Surface Burning Characteristics of Building Materials

FM GLOBAL (FM)

FM P7825a	(2003) Approval Guide Fire Protection

UNDERWRITERS LABORATORIES (UL)

UL 1479	(2003) Fire Tests of Through-Penetration Firestops
UL 723	(2003) Test for Surface Burning Characteristics of Building Materials
UL Fire Resist Dir	(1999) Electrical Appliance and Utilization Equipment Directory

1.2 SUBMITTALS

Government approval is required for submittals with a "G" designation; submittals not having a "G" designation are for information only. When used, a designation following the "G" designation identifies the office that will review the submittal for the Government. The following shall be submitted in accordance with Section 01330 SUBMITTAL PROCEDURES:

SD-02 Shop Drawings

Firestopping Materials.

Detail drawings including manufacturer's descriptive data, typical details conforming to UL Fire Resist Dir or other details certified by another nationally recognized testing laboratory, installation instructions or UL listing details for a firestopping assembly in lieu of fire-test data or report. For those firestop applications for which no UL tested system is available through a manufacturer, a manufacturer's engineering judgement, derived from similar UL system designs or other tests, shall be submitted for review and approval prior to installation. Submittal shall

indicate the firestopping material to be provided for each type of application. When more than a total of 5 penetrations and/or construction joints are to receive firestopping, provide drawings that indicate location, "F" and "T" ratings, and type of application.

SD-07 Certificates

Firestopping Materials.

Certificates attesting that firestopping material complies with the specified requirements. In lieu of certificates, drawings showing UL classified materials as part of a tested assembly may be provided. Drawings showing evidence of testing by an alternate nationally recognized independent laboratory may be substituted.

Installer Qualifications.

Documentation of training and experience.

Inspection.

Manufacturer's representative certification stating that firestopping work has been inspected and found to be applied according to the manufacturer's recommendations and the specified requirements.

1.3 GENERAL REQUIREMENTS

Firestopping shall consist of furnishing and installing tested and listed firestop systems, combination of materials, or devices to form an effective barrier against the spread of flame, smoke and gases, and maintain the integrity of fire resistance rated walls, partitions, including through-penetrations and construction joints and gaps. Through-penetrations include the annular space around conduit, and wires.

1.4 DELIVERY AND STORAGE

Materials shall be delivered in the original unopened packages or containers showing name of the manufacturer and the brand name. Materials shall be stored off the ground and shall be protected from damage and exposure to elements. Damaged or deteriorated materials shall be removed from the site.

1.5 COORDINATION

The specified work shall be coordinated with other trades.

PART 2 PRODUCTS

2.1 FIRESTOPPING MATERIALS

Firestopping materials shall consist of commercially manufactured, asbestos-free, containing no water soluble intumescent imgredients, noncombustible products FM P7825a approved for use with applicable construction and penetrating items, complying with the following minimum requirements:

2.1.1 Fire Hazard Classification

Material shall have a flame spread of 25 or less, and a smoke developed rating of 50 or less, when tested in accordance with ASTM E 84 or UL 723. Material shall be an approved firestopping material as listed in UL Fire Resist Dir or by a nationally recognized testing laboratory.

2.1.2 Toxicity

Material shall be nontoxic to humans at all stages of application or during fire conditions.

2.1.3 Fire Resistance Rating

Firestop systems shall be UL Fire Resist Dir listed or FM P7825a approved with "F" rating at least equal to fire-rating of fire wall or floor in which penetrated openings are to be protected, except that "F" rating may be 3 hours in through-penetrations of 4 hour fire rated wall or floor. Firestop systems shall also have "T" rating where required.

2.1.3.1 Through-Penetrations

Firestopping materials for through-penetrations, as described in paragraph GENERAL REQUIREMENTS, shall provide "F" and "T" fire resistance ratings in accordance with ASTM E 814 or UL 1479. Fire resistance ratings shall be as follows:

a. Penetrations of Fire Resistance Rated Walls and Partitions: Rating of wall or partition being penetrated.

PART 3 EXECUTION

3.1 PREPARATION

Areas to receive firestopping shall be free of dirt, grease, oil, or loose materials which may affect the fitting or fire resistance of the firestopping system. For cast-in-place firestop devices, formwork or metal deck to receive device prior to concrete placement shall be sound and capable of supporting device. Surfaces shall be prepared as recommended by the manufacturer.

3.2 INSTALLATION

Firestopping material shall completely fill void spaces regardless of geometric configuration, subject to tolerance established by the manufacturer. Firestopping shall be installed in accordance with manufacturer's written instructions. Tested and listed firestop systems shall be provided in the following locations, except in floor slabs on grade:

a. Penetrations of duct, conduit, tubing, cable and pipe through floors and through fire-resistance rated walls, partitions, and ceiling-floor assemblies.

b. Gaps at perimeter of fire-resistance rated walls and partitions, such as between the top of the walls and the bottom of roof decks.

3.3 INSPECTION

For all projects,the firestopped areas shall not be covered or enclosed until inspection is complete and approved by the manufacturer's technical representative. Inspect the applications initially to ensure adequate preparations (clean surfaces suitable for application, etc.) and periodically during the work to assure that the completed work has been accomplished according to the manufacturer's written instructions and the specified requirements. The Contractor shall submit written reports indicating locations of and types of penetrations and types of firestopping used at each location; type shall be recorded by UL listed printed numbers.

-- End of Section --

SECTION 07900

JOINT SEALANTS

PART 1 GENERAL

1.1 SUBMITTALS

Government approval is required for submittals with a "G" designation; submittals not having a "G" designation are for information only. When used, a designation following the "G" designation identifies the office that will review the submittal for the Government. Submit the following in accordance with Section 01330 SUBMITTAL PROCEDURES:

SD-03 Product Data

Sealants

Primers

Bond breakers

Backstops

Manufacturer's descriptive data including storage requirements, shelf life, curing time, instructions for mixing and application, and primer data (if required). Provide a copy of the Material Safety Data Sheet for each solvent, primer or sealant material.

SD-07 Certificates

Sealant

Certificates of compliance stating that the materials conform to the specified requirements.

1.2 ENVIRONMENTAL REQUIREMENTS

The ambient temperature shall be within the limits of 4 to 32 degrees C when the sealants are applied.

1.3 DELIVERY AND STORAGE

Materials shall be delivered to the job in the manufacturer's original unopened containers. The container label or accompanying data sheet shall include the following information as applicable: manufacturer, name of material, formula or specification number, lot number, color, date of manufacture, mixing instructions, shelf life, and curing time at the standard conditions for laboratory tests. Materials shall be handled and stored to prevent inclusion of foreign materials. Materials shall be stored at temperatures between 4 and 32 degrees C unless otherwise specified by the manufacturer.

PART 2 PRODUCTS

2.1 BACKING

Backing shall be 25 to 33 percent oversize for closed cell polyethylene rod material, unless otherwise indicated.

2.2 BOND-BREAKER

Bond-breaker shall be as recommended by the sealant manufacturer to prevent adhesion of the sealant to backing or to bottom of the joint.

2.3 Joint Filler

Refer to section 03300 CAST-IN-PLACE STRUCTURAL CONCRETE

2.4 PRIMER

Primer shall be non-staining type as recommended by sealant manufacturer for the application.

2.5 SEALANT

2.5.1 Interior

Interior use only; limited joint movement only: Sealant single or Multiple-component, Acrylic, polyuretlane or latex formulation with fillers, pigments, and chemical additives.

2.5.1.1 Acrylic Joint Sealant

Basis of Design: Acrylic emulsion based joint sealant Nitoseal 105 by FOSROC, Sikacryl-s, or Sikamastik by Sika or Sonolastic NP1 or NP2 by degussa.

2.5.1.2 Mildew Resistant Sealant

Where mildew-resistance (moisture conditions) occur such as kitchens, bathrooms, and toilet/shower areas use a silicone sealant per sealant manufacturer's recommedations.

2.5.2 Exterior

Exterior sealer shall be a one or two component, gun grade, moisture curing silicone, polyurethane, two part polyurethane, or two part polysulfide sealant to be used for sealing and caulking applications in active exterior joints. Joint movement capability shall be -25% to +25%. Sealer shall be weather resistant.

2.5.2.1 Fuel and Chemical Resistant Sealant

Exterior Horizontal Surfaces: Provide single- or multi-component; pourable for horizontal surface, non-sag for vertical surfaces; joint movement capabilities consistent with anticipated, maximum joint movement; fuel- and chemical-resistant for horizontal, traffic surfaces per sealant manufacturer's recommendations.

2.6 SOLVENTS AND CLEANING AGENTS

Solvents, cleaning agents, and accessory materials shall be provided as recommended by the manufacturer.

PART 3 EXECUTION

3.1 GENERAL

3.1.1 Surface Preparation

The surfaces of joints to receive sealant shall be free of all frost, condensation and moisture. Oil, grease, dirt, chalk, particles of mortar, dust, loose rust, loose mill scale, and other foreign substances shall be removed from surfaces of joints to be in contact with the sealant. Oil and grease shall be removed with solvent and surfaces shall be wiped dry with clean cloths. For surface types not listed below, the sealant manufacturer shall be contacted for specific recommendations.

3.1.2 Concrete and Masonry Surfaces

Where surfaces have been treated with curing compounds, oil, or other such materials, the materials shall be removed by sandblasting or wire brushing. Laitance, efflorescence and loose mortar shall be removed from the joint cavity.

3.1.3 Steel Surfaces

Steel surfaces to be in contact with sealant shall be sandblasted or, if sandblasting would not be practical or would damage adjacent finish work, the metal shall be scraped and wire brushed to remove loose mill scale. Protective coatings on steel surfaces shall be removed by sandblasting or by a solvent that leaves no residue.

3.1.4 Wood Surfaces

Wood surfaces to be in contact with sealants shall be free of splinters and sawdust or other loose particles.

3.2 APPLICATION

3.2.1 Masking Tape

Masking tape shall be placed on the finish surface on one or both sides of a joint cavity to protect adjacent finish surfaces from primer or sealant smears. Masking tape shall be removed within 10 minutes after joint has been filled and tooled.

3.2.2 Backing

Backing shall be installed to provide the indicated sealant depth. The installation tool shall be shaped to avoid puncturing the backing.

3.2.3 Bond-Breaker

Bond-breaker shall be applied to fully cover the bottom of the joint without contaminating the sides where sealant adhesion is required.

3.2.4 Primer

Primer shall be used on concrete masonry units, wood, or other porous surfaces in accordance with instructions furnished with the sealant. Primer shall be applied to the joint surfaces to be sealed. Surfaces adjacent to joints shall not be primed.

3.2.5 Sealant

Sealant shall be used before expiration of shelf life. Multi-component sealants shall be mixed according to manufacturer's printed instructions. Sealant in guns shall be applied with a nozzle of proper size to fit the width of joint. Joints shall be sealed as detailed in the drawings. Sealant shall be forced into joints with sufficient pressure to expel air and fill the groove solidly. Sealant shall be installed to the indicated depth without displacing the backing. Unless otherwise indicated, specified, or recommended by the manufacturer, the installed sealant shall be dry tooled to produce a uniformly smooth surface free of wrinkles and to ensure full adhesion to the sides of the joint; the use of solvents, soapy water, etc., will not be allowed. Sealants shall be installed free of air pockets, foreign embedded matter, ridges and sags. Sealer shall be applied over the sealant when and as specified by the sealant manufacturer.

3.3 CLEANING

The surfaces adjoining the sealed joints shall be cleaned of smears and other soiling resulting from the sealant application as work progresses.

-- End of Section --

SECTION 08110

STEEL DOORS AND FRAMES

PART 1 GENERAL

1.1 REFERENCES

The publications listed below form a part of this specification to the extent referenced. The publications are referred to in the text by the basic designation only.

AMERICAN NATIONAL STANDARDS INSTITUTE (ANSI)

ANSI A250.6	(1997) Hardware on Standard Steel Doors (Reinforcement - Application)
ANSI A250.8	(1998) SDI-100 Recommended Specifications for Standard Steel Doors and Frames

ASTM INTERNATIONAL (ASTM)

ASTM C 578	(2004) Rigid, Cellular Polystyrene Thermal Insulation
ASTM C 591	(2001) Unfaced Preformed Rigid Cellular Polyisocyanurate Thermal Insulation
ASTM C 612	(2004) Mineral Fiber Block and Board Thermal Insulation
ASTM D 2863	(1997) Measuring the Minimum Oxygen Concentration to Support Candle-Like Combustion of Plastics (Oxygen Index)

NATIONAL FIRE PROTECTION ASSOCIATION (NFPA)

NFPA 80	(1999) Fire Doors and Fire Windows
NFPA 105	(1999) The Installation of Smoke-Control Door Assemblies
NFPA 252	(1999) Standard Methods of Fire Tests of Door Assemblies

STEEL DOOR INSTITUTE (SDI)

SDI 111-F	Recommended Existing Wall Anchors for Standard Steel Doors and Frames
SDI 113	(1979) Apparent Thermal Performance of STEEL DOOR and FRAME ASSEMBLIES

UNDERWRITERS LABORATORIES (UL)

UL 10B (1997) Fire Tests of Door Assemblies

1.2 SUBMITTALS

Government approval is required for submittals with a "G" designation; submittals not having a "G" designation are for information only. When used, a designation following the "G" designation identifies the office that will review the submittal for the Government. The following shall be submitted in accordance with Section 01330 SUBMITTAL PROCEDURES:

SD-02 Shop Drawings

Doors; G AED

Frames; G AED

Accessories

Weatherstripping

Show elevations, construction details, metal gages, hardware provisions, method of glazing, and installation details.

Schedule of doors; G AED

Schedule of frames; G AED

Submit door and frame locations.

SD-03 Product Data

Doors; G AED

Frames; G AED

Accessories

Weatherstripping

Submit manufacturer's descriptive literature for doors, frames, and accessories. Include data and details on door construction, panel (internal) reinforcement, insulation, and door edge construction. When "custom hollow metal doors" are provided in lieu of "standard steel doors," provide additional details and data sufficient for comparison to SDI/DOOR A250.8 requirements.

SD-04 Samples

Factory-applied enamel finish; G AED

Where colors are not indicated, submit manufacturer's standard colors and patterns for selection.

1.3 DELIVERY, STORAGE, AND HANDLING

Deliver doors, frames, and accessories undamaged and with protective wrappings or packaging. Provide temporary steel spreaders securely fastened

to the bottom of each welded frame. Store doors and frames on platforms under cover in clean, dry, ventilated, and accessible locations, with 6 mm airspace between doors. Remove damp or wet packaging immediately and wipe affected surfaces dry. Replace damaged materials with new.

PART 2 PRODUCTS

2.1 STANDARD STEEL DOORS

ANSI A250.8, except as specified otherwise. Prepare doors to receive hardware specified in Section 08710, "Door Hardware." Undercut where indicated. Exterior doors shall have top edge closed flush and sealed to prevent water intrusion. Doors shall be 44.5 mm thick, unless otherwise indicated.

All exterior doors shall be hollow metal doors.

2.2 ACCESSORIES

2.2.1 Louvers

2.2.1.1 Interior Louvers

Louvers shall be stationary sightproof type. Detachable moldings on room or non security side of door; on security side of door, moldings to be integral part of louver. Form louver frames of 0.9 mm thick steel and louver blades of a minimum 0.6 mm. Sightproof louvers to be inverted "V" blade design or inverted "Y" blade design.

2.2.2 Astragals

For pairs of exterior steel doors which will not have astragals or removable mullions, as specified in Section 08710, "Door Hardware," provide overlapping steel astragals with the doors.

2.2.3 Moldings

Provide moldings around glass of interior and exterior doors and louvers of interior doors. Provide nonremovable moldings on outside of exterior doors and on corridor side of interior doors. Other moldings may be stationary or removable. Secure inside moldings to stationary moldings, or provide snap-on moldings.

2.3 INSULATION CORES

Insulated cores shall be of type specified, and provide an apparent U-factor of .48 in accordance with SDI 113 and shall conform to:

a. Rigid Polyurethane Foam: ASTM C 591, Type 1 or 2 . Foamed-in-place or in board form, with oxygen index of not less than 22 percent when tested in accordance with ASTM D 2863; or

b. Rigid Polystyrene Foam Board: ASTM C 578, Type I or II , Board form; or

c. Mineral board: ASTM C 612, Type I, Block or board form.

Basis of Design: Imperial Doors.

2.4 STANDARD STEEL FRAMES

ANSI A250.8, except as otherwise specified. Form frames to sizes and shapes indicated, with welded corners. Provide steel frames for doors, unless otherwise indicated.

2.4.1 Steel Thickness (nominal):

For heavy duty doors: 1.5 mm.
For extra heavy duty doors: 1.9 mm.
For maximum duty doors: 2.7 mm.

2.4.2 Welded Frames

Continuously weld frame faces at corner joints. Mechanically interlock or continuously weld stops and rabbets. Grind welds smooth.

2.4.3 Mullions

Mullions shall be closed or tubular construction and shall member with heads and jambs butt-welded thereto. Bottom of door mullions shall have adjustable floor anchors and spreader connections.

2.4.4 Stops and Beads

Form stops and beads from 0.9 mm thick steel. Provide for glazed and other openings in standard steel frames. Secure beads to frames with oval-head, countersunk Phillips self-tapping sheet metal screws or concealed clips and fasteners. Space fasteners approximately 300 to 400 mm on centers. Miter molded shapes at corners. Butt or miter square or rectangular beads at corners.

2.4.5 Anchors

Provide anchors to secure the frame to adjoining construction. Provide steel anchors, zinc-coated or painted with rust-inhibitive paint, not lighter than 1.2 mm thick.

2.4.5.1 Wall Anchors

Provide at least three anchors for each jamb. For frames which are more than 2285 mm in height, provide one additional anchor for each jamb for each additional 760 mm or fraction thereof.

a. Masonry: Provide anchors of corrugated or perforated steel straps or 5 mm diameter steel wire, adjustable or T-shaped;

b. Completed openings: Secure frames to completed masonry with expansion bolts in accordance with SDI 111-F.

2.4.5.2 Floor Anchors

Provide floor anchors drilled for 10 mm anchor bolts at bottom of each jamb member.

2.5 FIRE AND SMOKE DOORS AND FRAMES

NFPA 80 and NFPA 105 and this specification. The requirements of NFPA 80 and NFPA 105 shall take precedence over details indicated or specified.

2.5.1 Labels

Fire doors and frames shall bear the label of Underwriters Laboratories (UL), Factory Mutual Engineering and Research (FM), or Warnock Hersey International (WHI) or independent testing organization attesting to the rating required. Testing shall be in accordance with NFPA 252 or UL 10B. Labels shall be metal with raised letters, and shall bear the name or file number of the door and frame manufacturer. Labels shall be permanently affixed at the factory to frames and to the hinge edge of the door. Door labels shall not be painted.

2.5.2 Astragal on Fire and Smoke Doors

On pairs of labeled fire doors, conform to NFPA 80 and UL. On smoke control doors, conform to NFPA 105.

2.6 WEATHERSTRIPPING

2.6.1 Integral Gasket

Black synthetic rubber gasket with tabs for factory fitting into factory slotted frames, or extruded neoprene foam gasket made to fit into a continuous groove formed in the frame, may be provided in lieu of head and jamb seals specified in Section 08710, "Door Hardware." Insert gasket in groove after frame is finish painted. Air leakage of weatherstripped doors shall not exceed 2.19 by 10-5 cubic meters per second of air per square meter of door area.

2.7 HARDWARE PREPARATION

Provide minimum hardware reinforcing gages as specified by door manufacturer's recommendations. Drill and tap doors and frames to receive finish hardware. Prepare doors and frames for hardware in accordance with the applicable requirements of ANSI A250.8 and ANSI A250.6. Drill and tap for surface-applied hardware at the project site. Build additional reinforcing for surface-applied hardware into the door at the factory. Locate hardware in accordance with the requirements of ANSI A250.8. Punch door frames, with the exception of frames that will have weatherstripping, to receive a minimum of two rubber or vinyl door silencers on lock side of single doors and one silencer for each leaf at heads of double doors. Set lock strikes out to provide clearance for silencers.

2.8 FINISHES

2.8.1 Factory-Primed Finish

All surfaces of doors and frames shall be thoroughly cleaned, chemically treated and factory primed with a rust inhibiting coating. Where coating is removed by welding, apply touchup of factory primer.

Bssis of Design: Jotun, Penguard Special.

2.8.2 Factory-Primed Finish

Thoroughly clean and chemically treat to insure maximum paint adhesion. Factory prime as recommended by door manufacturer. Provide for exterior doors and interior doors, indicated.

2.9 FABRICATION AND WORKMANSHIP

Finished doors and frames shall be strong and rigid, neat in appearance, and free from defects, waves, scratches, cuts, dents, ridges, holes, warp, and buckle. Molded members shall be clean cut, straight, and true, with joints coped or mitered, well formed, and in true alignment. Dress exposed welded and soldered joints smooth. Design door frame sections for use with the wall construction indicated. Corner joints shall be well formed and in true alignment. Conceal fastenings where practicable. On wraparound frames for masonry partitions, provide a throat opening 3 mm larger than the actual masonry thickness. Design other frames in exposed masonry walls or partitions to allow sufficient space between the inside back of trim and masonry to receive calking compound.

2.9.1 Grouted Frames

Fill the stops with strips of rigid insulation to keep the grout out of the stops and to facilitate installation of stop-applied head and jamb seals.

PART 3 EXECUTION

3.1 INSTALLATION

3.1.1 Frames

Set frames in accordance with door manufacturer's recommendations. Plumb, align, and brace securely until permanent anchors are set. Anchor bottoms of frames with expansion bolts or powder-actuated fasteners. Build in or secure wall anchors to adjoining construction. Backfill frames with mortar. When an additive is provided in the mortar, coat inside of frames with corrosion-inhibiting bituminous material. Ensure that stops are filled with rigid insulation before grout is placed.

3.1.2 Doors

Hang doors in accordance with clearances recommended by door manufacturer. After erection and glazing, clean and adjust hardware.

3.2 Fire and Smoke Doors and Frames

Install fire doors and frames, including hardware, in accordance with NFPA 80. Install fire rated smoke doors and frames in accordance with NFPA 80 and NFPA 105.

3.3 PROTECTION

Protect doors and frames from damage. Repair damaged doors and frames prior to completion and acceptance of the project or replace with new, as directed. Wire brush rusted frames until rust is removed. Clean thoroughly. Apply an all-over coat of rust-inhibitive paint of the same type used for shop coat.

3.4 CLEANING

Upon completion, clean exposed surfaces of doors and frames thoroughly. Remove mastic smears and other unsightly marks.

3.5 SCHEDULE

Some metric measurements in this section are based on mathematical conversion of inch-pound measurements, and not on metric measurement commonly agreed to by the manufacturers or other parties. The inch-pound and metric measurements are as follows:

PRODUCTS	INCH-POUND	METRIC
Door thickness	1 3/4 inches	44.5 mm
Steel channels	16 gage	1.5 mm
Steel Sheet	23 gage	0.7 mm
	16 gage	1.5 mm
	20 gage	0.9 mm
	18 gage	1.2 mm
Anchor bolts	3/8 inches	10 mm

-- End of Section --

SECTION 08330

OVERHEAD ROLLING DOORS

PART 1 GENERAL

1.1 DESCRIPTION

Overhead rolling doors shall be spring counterbalanced, rolling type, with interlocking slats, complete with guides, fastenings, hood, brackets, and operating mechanisms, and shall be designed for use on openings as indicated. Each door shall be provided with a permanent label showing the manufacturer's name and address and the model/serial number of the door. Doors in excess of the labelled size shall be deemed oversize and shall be provided with a listing agency oversize label, or a listing agency oversize certificate, or a certificate signed by an official of the manufacturing company certifying that the door and operator have been designed to meet the specified requirements.

1.1.1 Wind Load Requirements

Doors and components shall be designed to withstand the minimum design wind load of 960 Pa . Doors shall be constructed to sustain a superimposed load, both inward and outward, equal to 1-1/2 times the minimum design wind load. Recovery shall be at least 3/4 of the maximum deflection within 24 hours after the test load is removed. Sound engineering principles may be used to interpolate or extrapolate test results to door sizes not specifically tested

1.1.2 Operational Cycle Life

All portions of the door and door operating mechanism that are subject to movement, wear, or stress fatigue shall be designed to operate through a minimum number of 10 cycles per day. One complete cycle of door operation is defined as when the door is in the closed position, moves to the full open position, and returns to the closed position.

1.2 SUBMITTALS

Government approval is required for submittals with a "G" designation; submittals not having a "G" designation are for information only. When used, a designation following the "G" designation identifies the office that will review the submittal for the Government. The following shall be submitted in accordance with Section 01330 SUBMITTAL PROCEDURES:

SD-02 Shop Drawings

Approved Detail Drawings
Installation

Drawings showing the location of each door including schedules. Drawings shall include elevations of each door type, details and method of anchorage, details of construction, location and installation of hardware, shape and thickness of materials, details of joints and connections, and details of guides, power operators, controls, and other fittings.

SD-03 Product Data

Overhead Rolling Doors

Manufacturer's catalog data, test data, and summary of forces and loads on the walls/jambs.

Manufacturer's preprinted installation instructions.

SD-06 Test Reports

Tests

Written record of fire door drop test.

SD-04 Samples

Overhead Rolling Doors

Submit three color samples of factory applied finishes.

SD-07 Certificates

Fire Doors

Oversize labels or certificates stating that the overhead rolling doors conform to requirements of this section. Certificates for oversize fire doors stating that the doors and hardware are manufactured in compliance with the requirements for doors of this type and class and have been tested and meet the requirements for the class indicated. Certificate is not required when fire door has a listing agency label or oversize label on the door bottom bar.

1.3 DELIVERY AND STORAGE

Doors shall be delivered to the jobsite wrapped in a protective covering with the brands and names clearly marked thereon. Doors shall be stored in a dry location that is adequately ventilated and free from dirt and dust, water, and other contaminants, and in a manner that permits easy access for inspection and handling.

PART 2 PRODUCTS

2.1 OVERHEAD ROLLING DOORS

Doors shall be surface-mounted type with guides at jambs set back a sufficient distance to clear the opening. Exterior doors shall be mounted as indicated on Drawings.

2.1.1 Curtains

The curtains shall roll up on a barrel supported at the head of opening on brackets, and shall be balanced by helical torsion springs. Steel slats for doors less than 4.6 m wide shall be minimum bare metal thickness of 0.71 mm. Slats shall be of the minimum bare metal decimal thickness required for the width indicated and the wind pressure specified above.

2.1.1.1 Non-Insulated Curtains

Curtains shall be formed of interlocking slats of shapes standard with the manufacturer. Slats for exterior doors shall be flat type.

2.1.2 Endlocks and Windlocks

The ends of each alternate slat for interior doors shall have steel endlocks of manufacturer's stock design. In addition to endlocks, non-rated exterior doors shall have the manufacturer's standard windlocks as required to withstand the wind load. Windlocks shall prevent the curtain from leaving guides because of deflection from specified wind pressure.

2.1.3 Bottom Bar

The curtain shall have a standard bottom bar consisting of two hot-dip galvanized steel angles for steel doors or as standard with manufacturer.

2.1.4 Guides

Guides shall be steel structural shapes or formed steel shapes, of a size and depth to provide proper clearance for operation and resistance under the design windload. Guides shall be attached to adjoining construction with fasteners recommended by the manufacturer. Spacing of fasteners shall be as required to meet the minimum design windload. Doors and guides in hazardous areas shall have static grounding.

2.1.5 Barrel

The barrel shall be steel pipe or commercial welded steel tubing of proper diameter for the size of curtain. Deflection shall not exceed 2.5 mm per meter of span. Ends of the barrel shall be closed with metal plugs, machined to fit the pipe. Aluminum plugs are acceptable on non-fire door barrels.

2.1.6 Springs

Counter-balance torsion springs shall be installed within the barrel and shall be capable of producing sufficient torque to assure easy operation of the door curtain. Access shall be provided for spring tension adjustment from outside of the bracket without removing the hood.

2.1.7 Brackets

Brackets shall be of steel plates to close the ends of the roller-shaft housing, and to provide mounting surfaces for the hood. An operation bracket hub and shaft plugs shall have sealed prelubricated ball bearings.

2.1.8 Hoods

Hoods shall be steel with minimum bare metal thickness of 0.56 mm formed to fit contour of the end brackets, and shall be reinforced with steel rods, rolled beads, or flanges at top and bottom edges. Multiple segment and single piece hoods shall be provided with support brackets of the manufacturer's standard design as required for adequate support.

2.1.9 Weatherstripping

Exterior doors shall be fully weatherstripped. A compressible and replaceable weather seal shall be attached to the bottom bar. Weather seal at door guides shall be continuous vinyl or neoprene, bulb or leaf type, or shall be nylon-brush type. A weather baffle shall be provided at the lintel or inside the hood. Weatherstripping shall be easily replaced without special tools.

2.1.10 Operation

Doors shall be operated by means of manual hand-chain

2.1.10.1 Manual Hand-Chain Operation

Operation shall be by means of a steel endless chain extending to within 915 mm of floor. Reduction shall be provided by use of roller chain and sprocket drive or suitable gearing, to reduce the pull required on hand chain to 150 N to 160 N.

2.1.11 Locking

Locking shall consist of chain lock keeper, suitable for padlock by others, for chain operated doors

2.1.12 Finish

Steel slats and hoods shall receive a factory baked-on prime coat for field finishing Surfaces other than slats, hood, and faying surfaces shall be cleaned and treated to assure maximum paint adherence and shall be given a factory dip or spray coat of rust inhibitive metallic oxide or synthetic resin primer.

2.2 ROLLING COUNTER FIRE DOOR

Rolling counter Fire Door shall be mounted at face of wall as indicated on drawings, labled with UL 3/4 hour fire rating, operation shall be manual push up with conventional release system and Automatic closer activated by fisible Link.

PART 3 EXECUTION

3.1 INSTALLATION

Doors shall be installed in accordance with approved detail drawings and manufacturer's instructions. Anchors and inserts for guides, brackets, hardware, and other accessories shall be accurately located. Upon completion, doors shall be free from warp, twist, or distortion. Doors shall be lubricated, properly adjusted, and demonstrated to operate freely.

3.2 FIELD PAINTED FINISH

Steel doors and frames shall be field painted in accordance with Section 09900 PAINTING, GENERAL. Weatherstrips shall be protected from paint. Finish shall be free of scratches or other blemishes. Color shall be gloss white.

3.3 CONTINUED OPERATION

Operate and maintain doors per manufacturer's operation and maintenance manuals requirements.

-- End of Section --

SECTION 08520

ALUMINUM WINDOWS

PART 1 GENERAL

1.1 REFERENCES

The publications listed below form a part of this specification to the extent referenced. The publications are referred to within the text by the basic designation only.

AMERICAN ARCHITECTURAL MANUFACTURERS ASSOCIATION (AAMA)

AAMA 101	(1999) Voluntary Specifications for Aluminum, Vinyl (PVC) and Wood Windows and Glass Doors

BRITISH STANDARDS INSTITUTION (BSI)

BS 1474	(1987) Specification for wrought aluminium and aluminium alloys for general engineering purposes: bars, extruded round tubes and sections

1.2 PERFORMANCE REQUIREMENTS

Window sash shall not be operable or removable from the outside when closed. Window sashes shall not rattle in frames under normally occurring site conditions. Significant water shall not penetrate sashes, frames, connections of either, or fully assembled window units under conditions of driving precipitation. Force required to operate window shall not exceed that applied by an average person using one hand. At the same time, windows must resist site conditions with the potential to force the window open or shut. Windows shall be weather-stripped or otherwise designed to prevent the transmission of drafts. Frame shall provide means for condensation or otherwise trapped moisture within the window unit itself to escape to the exterior. Frame shall allow for connection of insect screening without gaps or openings that might allow the passage of insects or windblown debris.

1.3 SUBMITTALS

Government approval is required for submittals with a "G" designation; submittals not having a "G" designation are for information only. When used, a designation following the "G" designation identifies the office that will review the submittal for the Government. The following shall be submitted in accordance with Section 01330 SUBMITTAL PROCEDURES:

SD-02 Shop Drawings

Aluminum Windows
Insect Screens

Drawings indicating elevations of window, rough-opening dimensions for each type and size of window, full-size sections,

thicknesses of metal, fastenings, methods of installation and anchorage, connections with other work, type of wall construction, size and spacing of anchors, method of glazing, types and locations of operating hardware, mullion details, weatherstripping details, screen details including method of attachment, and window schedules showing locations of each window type.

SD-03 Product Data

Aluminum Windows

Manufacturer's descriptive data and catalog cut sheets. Manufacturer's preprinted installation instructions and cleaning instructions.

SD-04 Samples

Aluminum Windows

Submit three color samples of the specified finishes.

SD-06 Test Reports

Aluminum Windows

Reports for each type of aluminum window attesting that identical windows have been tested and meet all performance requirements established under paragraph WINDOW PERFORMANCE.

SD-07 Certificates

Aluminum Windows

Certificates stating that the aluminum windows are AAMA certified conforming to requirements of this section. Labels or markings permanently affixed to the window will be accepted in lieu of certificates. Product ratings determined using NFRC 100 and NFRC 200 shall be authorized for certification and properly labeled by the manufacturer.

1.4 DELIVERY AND STORAGE

Deliver windows to project site in an undamaged condition. Use care in handling and hoisting windows during transportation and at the jobsite. Store windows and components out of contact with the ground, under a weathertight covering, so as to prevent bending, warping, or otherwise damaging the windows. Damaged windows shall be repaired to an "as new" condition as approved. If windows can not be repaired, provide a new unit.

1.5 PROTECTION

Protect finished surfaces during shipping and handling using the manufacturer's standard method, except that no coatings or lacquers shall be applied to surfaces to which calking and glazing compounds must adhere.

PART 2 PRODUCTS

2.1 MATERIALS

2.1.1 Aluminum

Aluminum shall meet BS 1474.

2.2 WINDOWS

2.2.1 Horizontal Sliding Windows (HS)

As indicated on drawings.

2.2.2 Hopper Windows

As indicated on drawings. Windows shall swing inwards.

2.2.3 Fixed Windows (F)

As indicated on drawings.

2.2.4 Glass and Glazing

Materials are specified in Section 08810 GLAZING.

2.2.5 Calking and Sealing

Are specified in Section 07900 JOINT SEALANTS.

2.2.6 Weatherstripping

AAMA 101.

2.3 FABRICATION

Fabrication shall be such that window units shall meet performance requirements as stated in this section.

2.3.1 Provisions for Glazing

Design windows and rabbets suitable for glass thickness specified. Exterior glazing shall have a minimum frame bite sufficent to meet requirements of installation location for glass retention. Design sash for inside glazing and for securing glass with metal beads, or glazing compound.

2.3.2 Weatherstripping

Provide easily replaceable factory-applied weatherstripping. Use molded vinyl,or molded or expanded Ethylene Propylene Diene Terpolymer (EPDM) weatherstripping for compression contact surfaces. Use treated woven pile or wool, or polypropylene or nylon pile bonded to nylon fabric and metal or plastic backing strip weatherstripping for sliding surfaces. Do no use neoprene or polyvinylchloride weatherstripping.

2.3.3 Fasteners

Use fasteners as standard with the window manufacturer for windows, trim, and accessories. Self-tapping sheet-metal screws are not acceptable for

material more than 2 mm thick.

2.3.4 Combination Windows

Windows used in combination shall be the same class and grade and shall be factory assembled. Where factory assembly of individual windows into larger units is limited by transportation considerations, prefabricate, match mark, transport, and field assemble.

2.3.5 Mullions and Transom Bars

Secure transom bars to adjoining construction and window units in such a manner as to permit expansion and contraction and to form a weathertight joint.

2.3.6 Accessories

Provide windows complete with necessary hardware, fastenings, clips, fins, anchors, glazing beads, and other appurtenances necessary for complete installation and proper operation. Furnish extruded aluminum subframe receptors and subsill with each window unit.

2.3.6.1 Hardware

The item, type, and functional characteristics shall be the manufacturer's standard for the particular window type. Provide hardware of suitable design and of sufficient strength to perform the function for which it is used. Equip all operating ventilators with a lock or latching device which can be secured from the inside.

2.3.6.2 Fasteners

Provide concealed anchors of the type recommended by the window manufacturer for the specific type of construction. Anchors and fasteners shall be compatible with the window and the adjoining construction. Provide a minimum of three anchors for each jamb located approximately 150 mm from each end and at midpoint.

2.3.7 Finishes

Exposed aluminum surfaces shall be factory finished with baked finish. Color shall be as selected. All windows for each building shall have the same finish.

2.3.8 Screens

Provide one insect screen permenently fixed to the exterior for each operable sash or ventilator. Design screens to be rewirable, and to permit easy access to operating hardware.

PART 3 EXECUTION

3.1 INSTALLATION

3.1.1 Method of Installation

Install in accordance with the window manufacturer's printed instructions and details. Build in windows as the work progresses or install without forcing into prepared window openings. Set windows at proper elevation,

location, and reveal; plumb, square, level, and in alignment; and brace, strut, and stay properly to prevent distortion and misalignment. Protect ventilators and operating parts against accumulation of dirt and building materials by keeping ventilators tightly closed and locked to frame. Bed screws or bolts in sill members, joints at mullions, contacts of windows with sills, built-in fins, and subframes in mastic sealant of a type recommended by the window manufacturer. Install windows in a manner that will prevent entrance of water and wind. Fasten insect screens securely in place.

3.1.2 Dissimilar Materials

Where aluminum surfaces are in contact with, or fastened to masonry, concrete, wood, or dissimilar metals, except stainless steel or zinc, the aluminum surface shall be protected from dissimilar materials as recommended by the manufacturer. Surfaces in contact with sealants after installation shall not be coated with any type of protective material.

3.1.3 Anchors and Fastenings

Make provision for securing units to each other, to masonry, and to other adjoining construction. Windows installed in masonry walls shall have head and jamb members designed to recess into masonry wall not less than 11 mm.

3.1.4 Adjustments After Installation

After installation of windows and completion of glazing and field painting, adjust all ventilators and hardware to operate smoothly and to provide weathertight sealing when ventilators are closed and locked. Lubricate hardware and operating parts as necessary.

3.2 CLEANING

Clean interior and exterior surfaces of window units of mortar, plaster, paint spattering spots, and other foreign matter to present a neat appearance, to prevent fouling of weathering surfaces and weather-stripping, and to prevent interference with the operation of hardware. Replace all stained, discolored, or abraded windows that cannot be restored to their original condition with new windows.

3.3 SCHEDULE

Some metric measurements in this section are based on mathematical conversion of inch-pound measurements, and not on metric measurement commonly agreed to by the manufacturers or other parties. The inch-pound and metric measurements are as follows:

PRODUCTS	INCH-POUND	METRIC
Metal Casing	0.0625 inch	1.59 mm
Aluminum Tube	0.0625 inch	1.59 mm
(Diameter)	1 inch	25 mm

-- End of Section --

SECTION 08581

BLAST RESISTANT TEMPERED GLASS WINDOWS

PART 1 GENERAL

1.1 REFERENCES

The publications listed below form a part of this specification to the extent referenced. The publications are referred to within the text by the basic designation only.

ALUMINUM ASSOCIATION (AA)

AA DAF-45	(2003) Designation System for Aluminum Finishes

AMERICAN ARCHITECTURAL MANUFACTURERS ASSOCIATION (AAMA)

AAMA 101	(2005) Voluntary Specifications for Aluminum, Vinyl (PVC) and Wood Windows and Glass Doors

AMERICAN NATIONAL STANDARDS INSTITUTE (ANSI)

ANSI Z97.1	(2004) Safety Glazing Materials Used in Buildings

ASTM INTERNATIONAL (ASTM)

ASTM C 1048	(2004) Heat-Treated Flat Glass - Kind HS, Kind FT Coated and Uncoated Glass
ASTM C 509	(2000) Elastomeric Cellular Preformed Gasket and Sealing Material
ASTM C 920	(2005) Elastomeric Joint Sealants

GLASS ASSOCIATION OF NORTH AMERICA (GANA)

GANA Glazing Manual	(2004) Glazing Manual

1.2 SUBMITTALS

Government approval is required for submittals with a "G" designation; submittals not having a "G" designation are for information only. When used, a designation following the "G" designation identifies the office that will review the submittal for the Government. The following shall be submitted in accordance with Section 01330 SUBMITTAL PROCEDURES:

SD-02 Shop Drawings

All Window units

Submit drawings indicating elevations of windows, full-size sections, thickness of metal, fastenings, proposed method of anchoring, size and spacing of anchors, details of construction,

complete details of setting methods and materials for each type of glazing material, details of hardware, mullion details, method and materials for weatherstripping, support conditions for the glass, material and method of attaching subframes, stools, casings, sills, trim, installation details, and other related items.

SD-03 Product Data

All Window units

Hardware

Setting materials

Weatherstripping

Submit window frame data for each type and finish.

SD-04 Samples

Window units

Submit when factory-finished color coating is provided.

SD-08 Manufacturer's Instructions

Glass

Submit glass manufacturer's instructions for setting and sealing materials and for installation of each type of glazing material specified.

1.3 QUALITY ASSURANCE

1.3.1 Label

Each prime window unit shall bear the AAMA Label warranting that the product complies with AAMA 101. Certificates of Compliance attesting that the prime window units meet the requirements of AAMA 101 will be acceptable in lieu of product labeling.

1.3.2 Glass and Glazing

Provide materials that are certified to meet ANSI Z97.1 by an independent testing laboratory.

1.3.3 Independent Testing

Testing shall be performed by an independent testing laboratory (certified by the Contracting Officer) and test report shall be signed by a registered professional engineer and shall include results from tests in the calculations.

1.4 DELIVERY, STORAGE, AND HANDLING

a. Deliver products to the site in unopened containers, labeled plainly with manufacturers' name and brands. Deliver window assemblies in an undamaged condition. Exercise care in handling and hoisting windows during transportation and at the job site.

Store windows and components out of contact with the ground, under a weathertight covering, so as to prevent bending, warping, or otherwise damaging the windows.

b. Finished surfaces shall be protected during shipping and handling using the manufacturer's standard method, except that no coatings or lacquers shall be applied to surfaces to which sealants, caulking, or glazing compounds must adhere.

1.5 ENVIRONMENTAL CONDITIONS

Do not start glazing work until the outdoor temperature is above 4 degrees C and rising unless approved provisions are made to warm the glass and rabbet surfaces. Provide sufficient ventilation to prevent condensation of moisture on glazing work during installation. Do not perform glazing work if moisture collects on window assemblies or during rainy weather.

PART 2 PRODUCTS

2.1 WINDOW UNITS

Primed window frames shall conform to AAMA 101 and the requirements specified herein. Provide windows of types, grades, performance classes, combinations, and sizes indicated or specified. Provide windows to accommodate hardware, glass, weatherstripping and accessories. Each window shall be a complete factory-assembled unit with glass factory or field installed.

2.2 WEATHERSTRIPPING

Weatherstripping shall conform to AAMA 101.

2.3 GLASS

Use ASTM C 1048 and ANSI Z97.1 Grade B (tempered), Style I (uncoated), Type 2, Class 1 (transparent).

2.4 SETTING MATERIALS

Provide types required for the applicable setting method specified in the GANA Glazing Manual, unless specified otherwise herein. Do not use metal sash putty, non-skinning compounds, nonresilient preformed sealers, or impregnated preformed gaskets. Materials exposed to view and unpainted shall be neutral color.

2.4.1 Elastomeric Sealant

ASTM C 920, Type S or M, Grade NS, Class 12.5, Use NT. Use for channel or stop glazing and metal sash. Sealant shall be chemically compatible with setting blocks, edge blocks, and sealing tapes. Color of sealant shall be white.

2.4.2 Sealing Tapes, Beads or Gaskets

Gaskets or beads shall be at least 9.5 mm wide with a Shore "A" durometer hardness of 50 and conform to ASTM C 509.

2.4.3 Setting Blocks and Edge Blocks

Use neoprene of 70 to 90 Shore "A" durometer hardness, chemically compatible with sealants used, and of sizes recommended by the glass manufacturer.

2.4.4 Accessories

Use accessories as required to provide a complete installation, including glazing points, clips, shims, angles, beads, and spacer strips. Provide noncorroding metal accessories. Provide primer-sealers and cleaners as recommended by the glass and sealant manufacturers.

2.5 WINDOW ASSEMBLIES

Window units shall conform to AAMA 101.

2.5.1 Provisions for Glazing

Provide windows and rabbets suitable for specified glass thickness. Provide sash for glazing and for securing glass with glazing channels and glazing compound.

2.5.2 Sealant, Gaskets, and Beads

Sealant, gaskets, and beads shall be continuous around the perimeter of the glass.

2.5.3 Weatherstripping

Provide for ventilating sections of windows to ensure a weathertight seal meeting the infiltration requirements specified in AAMA 101. Provide factory-applied weatherstripping that can be replaced by field repair mechanics. Use molded vinyl, molded or molded-expanded neoprene for weatherstripping for compression contact surfaces. Do not use neoprene or polyvinyl chloride weatherstripping where it will be exposed to direct sunlight.

2.5.4 Fasteners

Provide flathead, cross-recessed type, exposed head screws and bolts with standard threads for use on windows, trim, and accessories. Screw heads shall finish flush with adjoining surfaces. Self-tapping sheet-metal screws are not acceptable for material more than 1.59 mm thick.

2.5.5 Drips and Weep Holes

Provide continuous drips over heads of top ventilators. Where fixed windows adjoin ventilators, drips shall be continuous across tops of fixed windows. Provide drips and weep holes as required to return water to the outside.

2.5.6 Combination Windows

Windows used in combination shall be the same grade and performance class and shall be factory assembled. Where factory assembly of individual windows into larger units is limited by transportation considerations, prefabricate, match mark, transport, and field assemble.

2.5.7 Accessories

Provide windows complete with necessary hardware, fastenings, clips, fins, anchors, glazing beads, and other appurtenances necessary for complete installation and proper operation.

2.5.8 Hardware

The item, type, and functional characteristics shall be the manufacturer's standard for the particular window type and shall conform to AAMA 101. Provide hardware that functions after the window assembly has withstood the application of the design blast pressure causing the development of a static design resistance, ru, uniformally applied over both glazing and frame as defined in paragraph entitled "Certificates of Compliance" of this section. Equip operating ventilators with a lock or latching device which can be secured from the inside.

2.5.9 Anchors

Provide concealed anchors of the type recommended by the window manufacturer for the specific type of construction. Anchors and fasteners shall be compatible with the window and the adjoining construction. Provide a minimum of three anchors for each jamb located approximately 150 mm from each end and at midpoint.

2.5.10 Finishes

Exposed aluminum surfaces shall be factory finished with an anodic coating. Windows for each building shall have the same finish. Color shall be chosen from three (3) color samples submitted.

2.5.10.1 Anodic Coating

Clean exposed aluminum surfaces and provide an anodized finish conforming to AA DAF-45.

2.6 SOURCE QUALITY CONTROL

2.6.1 Window Assembly Structural Test

2.6.1.1 Test Sample Number

At least two sample window assemblies for each type of window provided shall be tested, under an increasing uniform static load. Number of samples, beyond two, is left up to the vendor. However, it is noted that the acceptance criteria encourages a larger number of test samples.

2.6.1.2 Test Procedure

Test windows (glass panes and support frame) shall be identical in type, size, sealant, gasket or bead and construction to those furnished by the window manufacturer. The frame assembly in the test setup shall be secured by boundary conditions that simulate the adjoining walls of the structure for intended installation. The simulation securing boundary conditions shall be verified and attested by an attending Professional Engineer. Using either a vacuum or a liquid-filled bladder, an increasing uniform load shall be applied to the entire window assembly (glass and frame) until failure occurs in either the glass or frame. Failure shall be defined as either breaking of glass or loss of frame resistance. The failure load,

rf, shall be recorded to three significant figures. The load should be applied at a rate of 0.5 ru per minute where ru is the static design resistance:

2.6.1.3 Acceptance Criteria

The static load capacity (rs) of a glass pane for the specified acceptance test procedure is:

rs = 0.876 ru (1)

The window assembly (frame and glass) is considered acceptable when the arithmetic mean of all the samples tested, r- such that:

r- => rs + sA (2)

where: rs = static load capacity of the glass pane for certification testing
s = sample standard deviation
A = acceptance coefficient (Table 1)

a. Arithmetic mean/standard deviation: For n test samples, r- is defined as:

r- = sum from i = 1 thru n for rfi divided by n (3)

where rfi is the recorded failure load of the ith test sample.

The sample standard deviation, s, is defined as:

s = the square root of the quantity of the sum from i = 1 thru n for (rfi - r-2) divided by (n - 1) (4)

The minimum value of the sample standard deviation, s, permitted to be employed in Equation (2) is:

s = 0.145 rs (5)

This assures a sample standard deviation no better than observed for the general population of tempered glass.

b. Additional sampled determination: The following equation can be used by tester to determine if additional test samples are justified. If:

r- =< rs + sB (6)

then with 90% confidence, the design will not prove to be adequate with additional tests. Obtain rejection coefficient, B, from Table 1.

Table 1. Statistical Acceptance and Rejection Coefficients

Number of Window Assemblies n	Acceptance Coefficient A	Rejection Coefficient B
2	4.14	.546
3	3.05	.871

Table 1. Statistical Acceptance and Rejection Coefficients

Number of Window Assemblies n	Acceptance Coefficient A	Rejection Coefficient B
4	2.78	1.14
5	2.65	1.27
6	2.56	1.36
7	2.50	1.42
8	2.46	1.48
9	2.42	1.49
10	2.39	1.52
11	2.37	1.54
12	2.35	1.57
13	2.33	1.58
14	2.32	1.60
15	2.31	1.61
16	2.30	1.62
17	2.28	1.64
18	2.27	1.65
19	2.27	1.65
20	2.26	1.66
21	2.25	1.67
22	2.24	1.68
23	2.24	1.68
24	2.23	1.69
25	2.22	1.70
30	2.19	1.72
40	2.17	1.75
50	2.14	1.77

PART 3 EXECUTION

3.1 INSTALLATION

3.1.1 Method of Installation

Install in accordance with the window manufacturer's printed instructions and details. Set windows at proper elevation, location, and reveal. Brace properly to prevent distortion and misalignment. Bed screws or bolts in sill members, joints at mullions, contacts of windows with sills, built-in fins, and subframes in mastic sealant of a type recommended by the window manufacturer. Install windows in a manner that will prevent entrance of water. Fasten hardware to windows.

3.1.2 Glass Setting

Items to be glazed shall be either shop or field glazed using glass of the quality and thickness specified or indicated. Preparation and glazing, unless otherwise approved, shall conform to applicable recommendations in the GANA Glazing Manual. Windows may be glazed in conformance with one of the glazing methods described in the standards under which they are produced, except that face puttying with no bedding will not be permitted. Handle and install glazing materials in accordance with manufacturer's instructions. Use beads or stops furnished with items to be glazed, to secure glass in place.

3.1.3 Dissimilar Materials

Where aluminum surfaces are in contact with, or fastened to, masonry, wood, or dissimilar metals, except stainless steel or zinc, the aluminum surface shall be protected from dissimilar materials as recommended in the Appendix to AAMA 101. Do not coat surfaces on which sealants are to adhere.

3.1.4 Anchors and Fastenings

Make provision for securing units to each other and to adjoining construction.

3.1.5 Adjustments After Installation

After installation of windows and completion of glazing and field painting, adjust ventilators and hardware to operate smoothly and to provide weathertight sealing when ventilators are closed and locked. Lubricate hardware and operating parts as recommended by the manufacturer.

3.2 CLEANING

Clean interior and exterior surfaces of window units of mortar, plaster, paint spattering spots, and other foreign matter to present a neat appearance, to prevent fouling of weathering surfaces and weatherstripping, and to prevent interference with the operation of hardware. Remove stained, discolored, or abraded windows that cannot be restored to their original condition, and replace with new windows.

3.3 SCHEDULE

Some metric measurements in this section are based on mathematical conversion of English unit measurements, and not on metric measurements commonly agreed to by the manufacturers or other parties. The English and metric units for the measurements shown are as follows:

Products	English Units	Metric Units
Gaskets	3/8 inch	9.5 mm
Glass	1/4 inch	6.0 mm
	5/16 inch	8.0 mm
	3/8 inch	10.0 mm
	1/2 inch	12.0 mm
	5/8 inch	16.0 mm
	3/4 inch	19.0 mm
	7/8 inch	22.0 mm
	1 inch	25.0 mm

-- End of Section --

SECTION 08710

DOOR HARDWARE

PART 1 GENERAL

1.1 REFERENCES

The publications listed below form a part of this specification to the extent referenced. The publications are referred to in the text by the basic designation only.

BRITISH STANDARDS INSTITUTION (BSI)

BS 7352	(1990) Specification for strength and durability performance of metal hinges for side hanging applications and dimensional requirements for template drilled hinges

NATIONAL FIRE PROTECTION ASSOCIATION (NFPA)

NFPA 80	(1999) Fire Doors and Fire Windows
NFPA 101	(2000) Life Safety Code

1.2 SUBMITTALS

Government approval is required for submittals with a "G" designation; submittals not having a "G" designation are for information only. When used, a designation following the "G" designation identifies the office that will review the submittal for the Government. The following shall be submitted in accordance with Section 01330 SUBMITTAL PROCEDURES:

SD-02 Shop Drawings

Hardware schedule; G AED

Keying system

SD-03 Product Data

Hardware items; G AED

SD-08 Manufacturer's Instructions

Installation

1.3 QUALITY ASSURANCE

1.3.1 Hardware Manufacturers and Modifications

Provide, as far as feasible, locks, hinges, and closers of one lock, hinge, or closer manufacturer's make. Modify hardware as necessary to provide features indicated or specified.

1.4 DELIVERY, STORAGE, AND HANDLING

Deliver hardware in original individual containers, complete with necessary appurtenances including fasteners and instructions. Mark each individual container with item number as shown in hardware schedule.

PART 2 PRODUCTS

2.1 TEMPLATE HARDWARE

Hardware to be applied to metal shall be made to template. Promptly furnish template information or templates to door and frame manufacturers. Coordinate hardware items to prevent interference with other hardware.

2.2 HARDWARE ITEMS

Hinges, locks, latches, exit devices, bolts, and closers shall be clearly and permanently marked with the manufacturer's name or trademark where it will be visible after the item is installed. For closers with covers, the name or trademark may be beneath the cover. Provide hardware items in quantities and locations as per approved hardware schedule.

2.2.1 Hinges

BS 7352. Construct 5-knuckle, 4-hole, satin finsh hinges so that pins will be nonremovable. Provide three hinges for doors 2200 mm or less in height; one additional hinge for each additional 800 mm of door height.

2.2.2 Locks and Latches

2.2.2.1 Lock Function Definitions

Privacy Function: Latch bolt by knobs/levers, dead bolt by turn inside or emergency key.

Office/Bedroom Function: Deadbolt locked by key from outside or thumbturn from inside. Latch operates from both sides by knob/lever.

Emergency Exit (Egress) Function: Latch bolt by exit device or from inside at all times and by knob/lever from outside. Outside lever/knob to be locked/unlocked by thumbturn from inside.

2.2.2.2 Mortise Lock with Cylinder (Wide Type)

Case: Steel, painted or zinc plated
Forend plate: Steel and chrome-nickel plated.
Deadbolt: Brass.
Latch: Brass.

2.2.2.3 Interior Mortise Bathroom Lock with Thumbturn and emergency release.

Case: Steel painted.
Forend plate: Steel and chrome plated.
Deadbolt: Zinc alloy and chrome plated.
Latch: Zinc alloy and chrome-nickel plated.

2.2.2.4 Security Mortise Lock with Cylinder

Case: Steel, painted or zinc plated.

Forend plate: Stainless Steel, Brass or Steel chrome plated.
Deadbolt: Steel, Brass 2 bars, chrome-nickel plated.

2.2.3 Exit Devices

Provide adjustable strikes for rim type or vertical rod devices. Touch bars may be provided in lieu of conventional crossbars and arms.

2.2.4 Cylinders

Cylinders shall be products of one manufacturer.

Body: Brass or brass chrome plated, standard size, euro profile.
Key: Multiwave (Standard).
Cam: Steel.
Key : minimum 5 pin.
Springs: Phosphorus bronze or magnizium.
Pins: Brass.

2.2.5 Keying System

Eight master keys fitting all locks and eight sub-master keys fitting all exterior doors shall be provided for each building. Three keys shall be provided for each interior door . Provide a numbering system identifying key to associated room door. Furnish 25% of the total number of keys as spare blanks.

2.2.6 Lock Trim

Commercial design with satin finish escutcheons and levers or knobs.

2.2.6.1 Lever Handles

Basis of Design: Politeknik, Model 303-251 SS, Diamond SD D01, or Consort CH 100.

2.2.6.2 Building Entrance Handles and Pulls

Basis of Design: Politeknik, Model 225 SS 200, or Consort CH 100.

2.2.6.3 Other Handles and Pulls

Basis of Design: Consort, or Politeknik, Model 302-251 SS WC.

2.2.7 Door Bolts

Provide dustproof strikes for bottom bolts, except for doors having metal thresholds.

2.2.8 Closers

Provide with brackets, arms, mounting devices, fasteners, and other features necessary for the particular application. Size closers in accordance with manufacturer's recommendations, or provide multi-size closers.

2.2.8.1 Interior Doors:

Basis of Design: GEZE TS 1500

2.2.8.2 Exterior Doors:

Basis of Design: GEZE TS 1500

2.2.9 Door Protection Plates

2.2.9.1 Sizes of Armor, Kick, and Push Plates

Width for single doors shall be 50 mm less than door width; width for pairs of doors shall be 25 mm less than door width. Height of kick plates shall be 200 mm for flush doors. Height of armor plates shall be not less than 900 mm for flush doors. Dimension of stainless steel push plates is 150 x 300 mm.

2.2.10 Door Stops

Basis of Design: Hagar, or Meysan.

2.2.11 Thresholds

Basis of Design: Hagar.

2.2.12 Weather Stripping Gasketing

Provide the type and function designation where specified in paragraph entitled "Hardware Schedule". A set shall include head and jamb seals, sweep strips, and, for pairs of doors, astragals.

2.2.12.1 Door Gasketing

General: Provide continuous weather-strip gasketing on exterior doors and provide smoke, light, or sound gasketing on interior doors where indicated or scheduled. Provide noncorrosive fasteners for exterior applications and elsewhere as indicated.

1. Perimeter Gasketing: Apply to head and jamb, forming seal between door and frame.

2. Meeting Stile Gasketing: Fasten to meeting stiles, forming seal when doors are closed.

3. Door Bottoms: Apply to bottom of door, forming seal with threshold when door is closed.

2.2.12.2 Door Sweeps

Door Sweeps: Gasket material held in place by flat metal housing or flange; surface mounted to face of door with screws.

1. Gasket Material: Brush as standard with manufacturer.
2. Housing Material: Housing metal as standard with manufacturer.

2.2.13 Overhead Rain Drips

Approximately 38 mm high by 64 mm projection, with length equal to overall width of door frame. Align bottom with door frame rabbet.

2.2.14 Special Tools

Provide special tools, such as spanner and socket wrenches and dogging keys, required to service and adjust hardware items.

2.2.15 Miscellaneous Hardware

Provide the following as required:

Swing Door Roller Lockset

2.3 FASTENERS

Provide fasteners of proper type, quality, size, quantity, and finish with hardware. Fasteners exposed to weather shall be of nonferrous metal or stainless steel. Provide fasteners of type necessary to accomplish a permanent installation.

2.4 FINISHES

Hardware shall have satin stainless steel finish, unless specified otherwise. Provide items not manufactured in stainless steel in satin chromium plated over brass or bronze finish, except surface door closers which shall have aluminum paint finish. Hinges for exterior doors shall be stainless steel or chromium plated brass or bronze finish. Exit devices may be provided in aluminum color or bronze finish in lieu of stainless steel finish. Exposed parts of concealed closers shall have finish to match lock and door trim.

PART 3 EXECUTION

3.1 INSTALLATION

Install hardware in accordance with manufacturers' printed instructions. Provide machine screws set in expansion shields for fastening hardware to solid masonry surfaces. Provide toggle bolts where required for fastening to hollow core construction. Provide through bolts where necessary for satisfactory installation.

3.1.1 Weather Stripping Installation

Handle and install weather stripping so as to prevent damage. Provide full contact, weather-tight seals. Doors shall operate without binding.

3.2 EXIT DOORS

Install hardware in accordance with NFPA 101.

3.3 FIRE DOORS AND EXIT DOORS

Install hardware in accordance with NFPA 80 for fire doors.

3.4 HARDWARE LOCATIONS

As indicated on Drawings.

a. Kick and Armor Plates: Push side of single-acting doors. Both sides of double-acting doors.

3.5 FIELD QUALITY CONTROL

After installation, protect hardware from paint, stains, blemishes, and other damage until acceptance of work. Submit notice of testing 15 days before scheduled, so that testing can be witnessed by the Government. Adjust hinges, locks, latches, bolts, holders, closers, and other items to operate properly. Demonstrate that permanent keys operate respective locks, and give keys to the Government . Correct, repair, and finish, as directed, errors in cutting and fitting and damage to adjoining work.

3.6 HARDWARE SCHEDULE

DH-1 Exterior Entrance Doors (each pair)

3 Pair Hinges
1 Lockset - Office/Bedroom function
1 set Flush bolts for inactive leaf
2 Closers
2 Kick Plates
2 Floor Stops
1 Overhead Rain Drip
1 Set Weatherstripping
2 Handles

DH-1A Exterior Entrance Doors (each pair) - Dining Facility Room 101 and Training Building

3 Pair Hinges
2 Exit Devices
2 Closers
2 Kick Plates
2 Floor Stops
1 Overhead Rain Drip
1 Set Weatherstripping
1 Handle

DH-2 Exterior Vestibule or Corridor Single Doors (each leaf)

1-1/2 Pair Hinges
1 Lockset - Office/Bedroom function
1 Closer
1 Kick Plate
1 Floor Stop
1 Overhead Rain Drip
1 Set Weatherstripping

DH-3 Exterior Egress Doors (each leaf)

1-1/2 Pair Hinges
1 Lockset office/Bedroom function.
1 Closer
1 Kick Plate
1 Floor Stop
1 Overhead Rain Drip
1 Set Weatherstripping

DH-3A Exterior Egress Doors (each leaf) - Training Building

1-1/2 Pair Hinges

1 Exit Device
1 Closer
1 Kick Plate
1 Floor Stop
1 Overhead Rain Drip
1 Set Weatherstripping

DH-4 Exterior Double Doors (each pair)

3 Pair Hinges
1 Lockset - Office/Bedroom function
1 Handle
1 Set Door Bolts (Inactive leaf)
2 Stops
1 Overhead Rain Drip (except at screen doors D-10 and D-11)
1 Set Weatherstripping

DH-5 Interior Single Doors (each pair) - Not Used

DH-6 Interior Double Doors (each pair)

3 Pair Hinges
1 Lockset - Office/Bedroom function
1 Closer on Active Door (Not required at BOQ closets)
2 Door Stops
1 Set Door Bolts
1 Handle

DH-7 Interior Single Doors (each leaf)

1-1/2 Pair Hinges
1 Lockset - Office/Bedroom function
1 Closer (Administrative and Computer Rooms only)
1 Door Stop

DH-8 Kitchen Double Action Door

1-1/2 Pair Spring Hinges
2 Push Plates
2 Armor Plates

DH-9 Toilet Room Entrance Door

1-1/2 Pair Hinges
1 Dead lock
1 Push Plate
1 Pull
1 Closer

DH-10 Toilet Cubicle Doors

1-1/2 Pair Hinges
1 Lockset - Privacy function
1 Handle

DH-11 Interior Double Egress Doors (each pair)

3 Pair Hinges - centered in frame to allow doors opening in opposite directions to close to a single flush plane.

1 Closer on each leaf operating in opposite directions
2 Door Stops
1 Handle per leaf

-- End of Section --

SECTION 08810

GLASS AND GLAZING

PART 1 GENERAL

1.1 REFERENCES

The publications listed below form a part of this specification to the extent referenced. The publications are referred to in the text by basic designation only.

AMERICAN NATIONAL STANDARDS INSTITUTE (ANSI)

ANSI Z97.1	(1984; R 1994) Safety Performance Specifications and Methods of Test for Safety Glazing Materials Used in Buildings

ASTM INTERNATIONAL (ASTM)

ASTM C 920	(2002) Elastomeric Joint Sealants
ASTM C 1036	(1991; R 1997) Flat Glass
ASTM E 1300	(1998) Determining the Minimum Thickness and Type of Glass Required to Resist a Specified Load

1.2 SUBMITTALS

Government approval is required for submittals with a "G" designation; submittals not having a "G" designation are for information only. When used, a designation following the "G" designation identifies the office that will review the submittal for the Government. The following shall be submitted in accordance with Section 01330 SUBMITTAL PROCEDURES:

SD-02 Shop Drawings

Installation

Drawings showing complete details of the proposed setting methods, mullion details, edge blocking, size of openings, frame details, materials, and types and thickness of glass.

SD-03 Product Data

Insulating Glass

Documentation for Energy Star qualifications.

Plastic Glazing

Glazing Accessories

Manufacturer's descriptive product data, handling and storage

recommendations, installation instructions, and cleaning instructions.

SD-04 Samples

Insulating Glass

Plastic Sheet

Glazing Compound

Glazing Tape

Sealant

Two 203 x 254 mm samples of each of the following: tinted glass, patterned glass, heat-absorbing glass, and insulating glass units.

Three samples of each indicated material. Samples of plastic sheets shall be minimum 125 by 175 mm .

SD-07 Certificates

Insulating Glass

Plastic Glazing

Certificates stating that the glass meets the specified requirements. Labels or manufacturers marking affixed to the glass will be accepted in lieu of certificates.

SD-08 Manufacturer's Instructions

Setting and sealing materials

Glass setting

Submit glass manufacturer's recommendations for setting and sealing materials and for installation of each type of glazing material specified.

1.3 SYSTEM DESCRIPTION

Glazing systems shall be fabricated and installed watertight and airtight to withstand thermal movement and wind loading without glass breakage, gasket failure, deterioration of glazing accessories, and defects in the work. Glazed panels shall comply with the safety standards, as indicated in accordance with ANSI Z97.1. Glazed panels shall comply with indicated wind/snow loading in accordance with ASTM E 1300.

1.4 DELIVERY, STORAGE AND HANDLING

Glazing compounds shall be delivered to the site in the manufacturer's unopened containers. Glass shall be stored indoors in a safe, well ventilated dry location in accordance with manufacturer's instructions, and shall not be unpacked until needed for installation. Glass shall not be stored on site over 1 month.

1.5 PROJECT/SITE CONDITIONS

Glazing work shall not be started until outdoor temperature is above 5 degrees C and rising, unless procedures recommended by glass manufacturer and approved by Government are made to warm the glass and rabbet surfaces. Ventilation shall be provided to prevent condensation of moisture on glazing work during installation. Glazing work shall not be performed during damp or raining weather.

PART 2 PRODUCTS

2.1 FLAT GLASS

Untreated glass shall be type I transparent flat type, Class 1 - clear quality q4 or q3, conforming to ASTM C 1036.

2.2 WIRED GLASS

Wired glass shall be Type II flat type, Class 1 - translucent , Quality q8 - glazing, Form 1 - wired and polished both sides. Wire mesh shall be polished stainless steel Mesh 1 - diamond or 2 - square. Wired glass for fire-rated windows shall bear an identifying UL label or the label of a nationally recognized testing agency, and shall be rated for 45 minutes when tested in accordance with DIN, BS, or EN standards. Wired glass for fire-rated doors shall be tested as part of a door assembly in accordance with DIN, BS, or EN stardards.

2.3 HEAT-TREATED GLASS

Heat-treated glass shall conform to the following requirements.

2.3.1 Tempered Glass

Tempered glass shall be kind FT fully tempered transparent flat type, Class 1-clear, Condition A uncoated surface, Quality q3 - glazing select, conforming to DIN, BS, or EN standards. Color shall be clear.

2.3.2 Heat-Strengthened Glass

Heat-strengthened glass shall be kind HS heat-strengthened transparent flat type, Class 1-clear, Condition A uncoated surface, Quality q3 - glazing select, conforming to DIN, BS, or EN standards. Color shall be clear.

2.4 GLAZING ACCESSORIES

2.4.1 Sealant

Sealant shall be elastomeric conforming to ASTM C 920, Type S or M, Grade NS, Class 12.5, Use G, of type chemically compatible with setting blocks, preformed sealing tape and sealants used in manufacturing insulating glass. Color of sealant shall be as selected from manufacturer's full range of standard colors by Government.

2.4.2 Glazing Gaskets

Glazing gaskets shall be extruded with continuous integral locking projection designed to engage into metal glass holding members to provide a watertight seal during dynamic loading, building movements and thermal movements.

2.4.3 Setting and Edge Blocking

Profiles, lengths and locations shall be as required and recommended by glass manufacturer.

PART 3 EXECUTION

3.1 PREPARATION

Detrimental materials shall be removed from glazing rabbet and glass surfaces and wiped dry with solvent. Glazing surfaces shall be dry and free of frost.

3.2 INSTALLATION

Glass and glazing work shall be performed in accordance with glass manufacturer's instructions and warranty requirements. Glass shall be installed with factory labels intact and removed only when instructed. Edges and corners shall not be ground, nipped or cut after leaving factory. Springing, forcing or twisting of units during installation will not be permitted.

3.3 CLEANING

Upon completion of project, outside surfaces of glass shall be washed clean and the inside surfaces of glass shall be washed and polished in accordance with glass manufacturer's recommendations.

3.4 PROTECTION

Glass work shall be protected immediately after installation. Glazed openings shall be identified with suitable warning tapes, cloth or paper flags, attached with non-staining adhesives. Reflective glass shall be protected with a protective material to eliminate any contamination of the reflective coating. Protective material shall be placed far enough away from the coated glass to allow air to circulate to reduce heat buildup and moisture accumulation on the glass. Glass units which are broken, chipped, cracked, abraded, or otherwise damaged during construction activities shall be removed and replaced with new units.

-- End of Section --

SECTION 09100

METAL SUPPORT ASSEMBLIES

PART 1 GENERAL

1.1 REFERENCES

The publications listed below form a part of this specification to the extent referenced. The publications are referred to in the text by the basic designation only.

ASTM INTERNATIONAL (ASTM)

ASTM A 463/A 463M	(2000) Steel Sheet, Aluminum-Coated, by the Hot-Dip Process
ASTM A 500	(1999) Cold-Formed Welded and Seamless Carbon Steel Structural Tubing in Rounds and Shapes
ASTM A 513	(2000) Electric-Resistance-Welded Carbon and Alloy Steel Mechanical Tubing
ASTM A 653/A 653M	(2001a) Steel Sheet, Zinc-Coated (Galvanized) or Zinc-Iron Alloy-Coated (Galvannealed) by the Hot-Dip Process
ASTM C 645	(2000) Nonstructural Steel Framing Members
ASTM C 754	(1999a) Installation of Steel Framing Members to Receive Screw-Attached Gypsum Panel Products
ASTM C 841	(1999) Installation of Interior Lathing and Furring

AMERICAN WELDING SOCIETY (AWS)

AWS D1.1/D1.1M	(1998) Structural Welding Code - Steel

DUETSCHES INSTITUTE FUR NORMUNG (DIN)

DIN 18182	Accessoires for use with gypsum plasterboards; steel plate sections

1.2 SUBMITTALS

Government approval is required for submittals with a "G" designation; submittals not having a "G" designation are for information only. When used, a designation following the "G" designation identifies the office that will review the submittal for the Government. The following shall be submitted in accordance with Section 01 33 00 SUBMITTAL PROCEDURES:

SD-02 Shop Drawings

Metal support systems; G AED

Submit for the erection of metal framing, furring, and ceiling suspension systems. Indicate materials, sizes, thicknesses, and fastenings.

1.3 DELIVERY, STORAGE, AND HANDLING

Deliver materials to the job site and store in ventilated dry locations. Storage area shall permit easy access for inspection and handling. If materials are stored outdoors, stack materials off the ground, supported on a level platform, and fully protected from the weather. Handle materials carefully to prevent damage. Remove damaged items and provide new items.

PART 2 PRODUCTS

2.1 MATERIALS

Provide steel materials for metal support systems with galvanized coating ASTM A 653/A 653M, Z180; aluminum coating ASTM A 463/A 463M, T1-75 ; or a 55-percent aluminum-zinc coating. Galvanized, aluminum, or 0.5 mm hot dip zinc cated steel sheets according to DIN 18182-Z100(100gr/m2), BS, or EN standards are also acceptable.

2.1.1 Materials for Attachment of Lath

2.1.1.1 Framed Ceiling Systems

ASTM C 841 or DIN 18182. Steel Studs: Cold-formed steel sheet with minimum yield strength of not less than 230 MPa, but not thinner than 0.85 mm thickness.

Connections: Self-drilling, self-tapping, corrosion-resistant steel screws

2.1.1.2 Furred (Sloped only) Ceiling Systems

Steel Tubing: ASTM A 500 or ASTM A 513; sizes and wall thicknesses as indicated.

2.1.2 Materials for Attachment of Gypsum Wallboard

2.1.2.1 Framed Ceiling Systems

ASTM C 645 . Steel Studs: Cold-formed steel sheet with minimum yield strength of not less than 230 MPa. Deflection shall be limited to l/360 member span.

2.1.2.2 Nonload-Bearing Wall Framing and Furring

ASTM C 645, but not thinner than 0.45 mm thickess, with 0.85 mm minimum thickness supporting wall hung items such as cabinetwork, equipment and fixtures 0.85 mm thickness.

Connections: Self-drilling, self-tapping, corrosion-resistant steel screws

2.2 SUSPENDED CEILING FRAMING

Suspended ceiling framing system shall have the capability to support the finished ceiling, light fixtures, air diffusers, and accessories, as shown. The suspension system shall have a maximum deflection of L/240. Carrying channels shall be formed from minimum 1.40 mm thick cold-rolled steel, 38

mm wide by 11 mm deep. Cross furring members shall conform to ASTM C 645, and shall be formed from cold-rolled steel, 19 mm wide by 11 mm deep. Carrying channels and furring members shall be made from hot-dip galvanized coated sheet.

2.3 TRIM, MOLDINGS, AND ACCESSORIES

2.3.1 Hangers

Suspended ceiling runner channel hangers shall be soft, annealed steel wire not less than No. 8 SWG nominal diameter.

2.3.2 Fastenings

Tie wire, rings, and other fastenings shall be corrosion-resisting steel.

2.3.2.1 Tie Wire

Tie wire for securing metal lath to supports, and for lacing shall be not less than No. 18 SWG diameter. Tie wire for all other applications shall be not less than No. 16 SWG diameter.

2.3.2.2 Clips

Clips used in lieu of tie wire for securing furring channels to the runner channels in ceiling construction shall be made from strips not less than 3 mm thick or shall be hairpin clip formed of No. 8 SWG wire. Other clips and rings or fastenings of similar materials shall be equivalent in holding power to that provided by tie wire for the specific application.

PART 3 EXECUTION

3.1 INSTALLATION

3.1.1 Systems for Attachment of Lath

3.1.1.1 Framed Ceiling Systems

ASTM C 841, except that framing members shall be 400 mm o.c. unless indicated otherwise.

3.1.1.2 Furred (Sloped only) Ceiling Framing Installation

Steel tubes at continuous furred, sloped plaster ceilings shall be applied directly to structural steel members and secured thereto by welding, each side for full width/length of interface. Space steel tubes as indicated. Welding shall be in accordance with AWS D1.1/D1.1M. Locate butt-welded splices at structural steel members only, staggered in adjacent rows.

3.1.2 Systems for Attachment of Gypsum Wallboard

3.1.2.1 Framed Ceiling Systems

ASTM C 754, except that framing members shall be 400 mm o.c. unless indicated otherwise.

3.2 SUSPENDED CEILING FRAMING INSTALLATION

Suspended system shall be installed in accordance with ASTM C 841. Where

channels are spliced, the ends shall be overlapped not less than 300 mm for 38 mm channels and not less than 200 mm for 20 mm channels with flanges of channels interlocked and securely tied near each end of the splice with two loops of the tie wire. Splices shall be staggered.

3.2.1 Hangers

Wire or strap hangers shall be attached to structural members in accordance with ASTM C 841, except hangers shall be spaced not more than 1220 mm along runner channels and 900 mm in the other direction or 1050 mm in both directions unless otherwise indicated or approved. Locations of hangers shall be coordinated with other work. Hangers at ends of runner channels shall be located not more than 150 mm from wall. Hanger wire shall be looped around bottom chord of open-web steel joist or secured to structural elements with suitable fasteners. Sags or twists in the suspended system shall be adjusted. Damaged or faulty parts shall be replaced.

3.2.2 Main Runners

Main runner channels shall be installed in accordance with ASTM C 841. Hanger wire shall be saddle-tied to runner channels, and the end of hanger wires shall be twisted three times around itself. Main runners shall not come in contact with abutting masonry or concrete walls and partitions. Main runners shall be located within 150 mm of the paralleling wall to support the ends of cross furring.

3.2.3 Furring Channels

Furring channels shall be spaced in accordance with ASTM C 841 for the type of lath used. Furring channels shall be securely saddle-tied to the runner channels and to structural supports at each crossing with tie wire, hairpin clips, or equivalent clips or fastenings. Furring channels shall be located within 50 mm of parallel walls and beams, and 15 mm from abutting walls. When gypsum lath is used on ceilings, hat-shaped sheetmetal furring channels may be used in lieu of 19 mm rolled steel furring channels. Gypsum lath shall be screw-applied at 200 mm on centers along supports and not less than 10 mm from edges of lath.

3.2.4 Light Fixtures and Air Diffusers

Light fixtures and air diffusers shall be supported directly from suspended ceiling runners. Wires shall be provided at appropriate locations to carry the weight of recessed or surface mounted light fixtures and air diffusers.

3.3 ERECTION TOLERANCES

Framing members which will be covered by finish materials such as wallboard, or plaster, shall be within the following limits:

a. Studs: 5 mm in 1.9 meters out of level, not cumulative; and

b. Face of framing members: 5 mm in 1.9 meters from a true plane.

-- End of Section --

SECTION 09225

CEMENT PLASTER

PART 1 GENERAL

1.1 REFERENCES

The publications listed below form a part of this specification to the extent referenced. The publications are referred to in the text by basic designation only.

ASTM INTERNATIONAL (ASTM)

ASTM A 185	(1997) Steel Welded Wire Fabric, Plain, for Concrete Reinforcement
ASTM C 150	(2002) Portland Cement
ASTM C 926	(1998a) Application of Portland Cement-Based Plaster

1.2 SUBMITTALS

Government approval is required for submittals with a "G" designation; submittals not having a "G" designation are for information only. When used, a designation following the "G" designation identifies the office that will review the submittal for the Government. Submit the following in accordance with Section 01330 SUBMITTAL PROCEDURES:

SD-03 Product Data

Plaster accessories

1.3 DELIVERY AND STORAGE

Packaged materials shall be delivered to the site in the original packages and containers with labels intact and seals unbroken. Cementitious materials shall be kept dry and stored off the ground under cover away from damp surfaces until ready to be used. Aggregate shall be covered to prevent the absorption or loss of moisture.

1.4 ENVIRONMENTAL CONDITIONS

Cement plaster shall not be applied when the ambient temperature is 4 degrees C or lower, or when a drop in temperature below 4 degrees C is expected within 48 hours after application.

PART 2 PRODUCTS

2.1 PORTLAND CEMENT

Portland cement shall conform to ASTM C 150, gray portland cement Type I or II.

2.2 CEMENT PLASTER COATS

Cement plaster coats shall be a field mixed product using portland cement and requiring the addition of and mixing with water for application. Add polypropylene fibers per manufacturer's recommendations

Basis of Design: Rheofibre by Degussa.

2.3 LIME

Lime shall be special hydrated finishing lime composed primarily of calcuim and magnesium oxides and suitable for use in cement plaster base coats.

2.4 SAND

Sand aggregate for job-mixed base coat cement plaster shall be natural or manufactured sand suitable for use in cement plaster.

2.5 METAL LATH

2.5.1 Woven Wire Lath (Chicken Wire)

Lath shall be flat base type with stiffeners, with backing fabricated from copper-bearing, cold-drawn, galvanized steel wire not less than 1.40 mm (0.0548 in), thick with openings not to exceed 50 x 50 mm.

2.6 ACCESSORIES

Accessories shall be roll formed galvanized steel, except that cornerite and striplath shall be formed from steel sheets with manufacturer's standard galvanized coating. Welded wire corner reinforcements shall be zinc coated, galvanized 1.4 mm (17 gauge) steel wire conforming to ASTM A 185.

2.6.1 Fastenings

Tie wire, rings, and other fastenings shall be corrosion-resisting stainless steel or nickel-copper alloy. Walls, partitions, and other vertical surfaces not incorporated in ceiling construction may be erected with soft, annealed steel.

2.6.1.1 Tie Wire

Tie wire for for lacing shall be not less than 1.22 mm diameter. Tie wire for all other applications shall be not less than 1.57 mm diameter.

2.6.2 Expanded Flange Corner Beads

Expanded flange corner beads shall be fabricated of 0.50 mm thick (0.0210 in) galvanized steel, with 64 mm wide flanges and 3 mm wide bead.

2.6.3 Cornerites

Cornerites shall be fabricated of galvanized expanded metal lath to form an angle of at least 100 degrees, with outstanding legs of not less than 50 mm.

2.6.4 Striplath

Striplath shall be fabricated of galvanized steel sheet, 1.4 kg per square

meter.

2.6.5 Casing Beads

Casing beads shall be fabricated of galvanized 0.70 mm (0.0276 inch) thick steel 19 mm depth, minimum 50 mm wide expansion wings, front edge of face flange shaved for intended use, back slightly arched to provide a spring effect.

2.6.6 Control Joints

Control joints shall be designed for expansion and contraction of plaster work due to thermal exposure. Control joints shall comprise of back-to-back casing beads.

2.6.7 Screws

Screws shall be self-drill steel.

2.7 WATER

Water shall be clean, fresh, and free from amounts of oils, acids, alkalis and organic matter that would be injurious to the cement plaster.

2.8 FINISH

Paint for cement plaster shall be per Section 09900.

PART 3 EXECUTION

3.1 PREPARATION OF SURFACES

Preparation of surfaces for application of cement plaster to masonry shall conform to the applicable requirements of ASTM C 926.

3.2 LATHING INSTALLATION

3.2.1 Metal Lath

Metal lath shall be applied with the long dimension across the supports, with true even surfaces, and without sags or buckles. The lath shall be secured to supports at intervals not exceeding 150 mm. Nails or staples shall be used for securing lath to wood supports. Side-laps shall be tied or otherwise secured at intervals not exceeding 225 mm between supports, in addition to being secured to supports.

3.2.2 Side and End Laps

Side and end laps of metal plaster bases shall be one full mesh.

3.3 OPENINGS

Reinforcement shall be provided at corners of openings in plastered areas extending 300 mm or more in any dimension by securing striplath diagonally at corners. Striplath shall be at least 150 mm wide by 400 mm long. Shorter lengths shall be used to preclude lapping striplath. Striplath shall be secured to lathing without extending fastenings into or around supporting members. Where plaster is applied directly to masonry surfaces, striplath shall be secured to the masonry.

3.4 CONTROL JOINTS

Furring shall be installed to true lines and surfaces and shall be rigidly supported and secured in place.

3.4.1 Installation Of Trim, Moldings, And Accessories

Trim, moldings, and accessories shall be installed in standard lengths level and plumb to straight lines, rigidly supported and secured in place, and as indicated on drawings. Fastenings shall be spaced not over 300 mm on centers for single-flanged accessories and not over 600 mm on centers on each flange of double-flanged accessories. Items shall be mitered or coped at corners, or prefabricated corners shall be used. Joints in straight runs shall be formed with splice or tie plates.

3.5 CORNER BEADS

Corner beads shall be installed in standard lengths at external plastered corners, and shall be secured to furring members or supports.

3.6 CORNERITES

Cornerites shall be installed at internal angles formed by abutting surfaces of metal lath not turned down at horizontal corners or returned around vertical corners. Cornerites shall be secured to lathed surfaces. Cornerites shall be secured to masonry where plaster is applied directly to masonry surfaces. Cornerites shall not be installed at unrestrained ceilings.

3.7 CASING BEADS

Casing beads shall be installed at the joints of dissimilar base materials in the same plane and at exposed edges of plaster including junctions of walls and ceilings except that beads shall not be installed at restrained ceilings abutting plastered surfaces. At the perimeter of unrestrained suspended ceilings, the casing bead shall be secured to the ceiling to provide a 10 mm opening between the abutting surfaces. The opening shall be sealed prior to plastering with sealant as specified in Section 07900 JOINT SEALING.

3.8 EXPANSION AND CONTROL JOINTS

Expansion joint shall be installed in plasterwork at the locations indicated or not more than 5 m on center. Plaster base shall not be run continuous through control joints. Additional supports shall be installed as required to support expansion and control joints.

3.9 TRIM

Trim shall be installed where indicated and as required to complete the plaster work.

3.10 PROPORTIONS AND MIXING

Proportions and mixing for job-mixed base coats shall conform to the requirements of ASTM C 926. Mixing of mill-mixed finish coat shall be in accordance with the manufacturer's directions.

3.11 CEMENT PLASTER APPLICATION

Cement plaster shall be applied in two coats to a total thickness of 20 mm as measured from the face of solid backing to the finished surface, including moderate texture variations. Cement plaster application shall conform to the applicable requirements of ASTM C 926 and the following:

3.11.1 Workmanship

Items or features of the work in connection with or adjoining the cement plaster shall be in place, plumb, straight, and true prior to beginning the cement plaster work. Masonry surfaces to receive cement plaster shall be evenly dampened immediately prior to application of cement plaster. Each cement plaster coat shall be applied continuously in one general direction, without allowing mortar to dry at edges. Where it is impossible to work the full dimension of a wall surface in a continuous operation, jointing shall be made at a break, opening, or other natural division of the surface. Edges to be joined shall be dampened slightly to produce a smooth confluence. Corners of cement plaster shall be slightly rounded.

3.11.2 Scratch Coat

Scratch coat shall be applied approximately 10 mm thick under sufficient pressure to form good keys and to completely embed the reinforcement. Before the scratch coat has set, it shall be lightly scratched in one direction and vertical surfaces shall be scratched in the horizontal direction only. The scratch coat shall be fog cured for a minimum of 72 hours.

3.11.3 Finish Coat

Surfaces of the scratch coat shall be dampened not more than 1 hour before the finish coat is to be applied to a uniform wetness with no free-standing water on the surface. The finish coat shall have a float finish and shall conform to the approved sample. The finish coat shall be fog cured for a minimum of 48 hours. Care shall be taken to prevent staining.

3.11.4 Surface Tolerance

When a 3 m straightedge is placed at any location on the finished surface of the cement plaster, excluding rough-textured finish, the surface shall not vary more than 3 mm from the straightedge.

3.11.5 Finishing cement plaster

Paint exterior cement plaster flat tan and interior cement plaster semi-gloss off-white per Section 09900.

3.12 CURING AND PROTECTION

Fog curing shall be accomplished by applying a fine mist of water to the cement plaster. Care shall be exercised during fog curing to avoid erosion damage to the cement plaster surfaces. A solid stream of water shall not be used. Frequency of fogging shall be not less than three times daily. When directed the Contractor shall protect the cement plaster from the direct rays of the sun during severe drying conditions using canvas, cloth or other approved sheet material.

3.13 PATCHING AND POINTING

Loose, cracked, damaged or defective work shall be replaced or patched as directed. Patching shall match existing work in texture and color and shall be finished flush.

-- End of Section --

SECTION 09250

GYPSUM BOARD

PART 1 GENERAL

1.1 REFERENCES

The publications listed below form a part of this specification to the extent referenced. The publications are referred to in the text by the basic designation only.

ASTM INTERNATIONAL (ASTM)

ASTM C 36/C 36M	(1999) Gypsum Wallboard
ASTM C 630/C 630M	(2001) Water-Resistant Gypsum Backing Board
ASTM C 1396/C 1396M	(2000) Standard Specification for Gypsum Board

1.2 SUBMITTALS

Government approval is required for submittals with a "G" designation; submittals not having a "G" designation are for information only. When used, a designation following the "G" designation identifies the office that will review the submittal for the Government. Submit the following in accordance with Section 01330 SUBMITTAL PROCEDURES:

SD-03 Product Data

Cementitious backer units

Glass Mat Water-Resistant Gypsum Tile Backing Board

Water-Resistant Gypsum Backing Board

Glass Mat Covered or Reinforced Gypsum Sheathing

Glass Mat Covered or Reinforced Gypsum Sheathing Sealant

Impact Resistant Gypsum Board

Accessories

Submit for each type of gypsum board and for cementitious backer units.

Gypsum Board

Submit documentation indicating percentage of post-industrial and post-consumer recycled content per unit of product. Indicate relative dollar value of recycled content products to total dollar value of products included in project.

Adhesives

Joint Treatment Materials

Submit manufacturer's product data, indicating VOC content.

Environmental Data

SD-04 Samples

Predecorated gypsum board; G AED

Submit for each color and pattern of predecorated gypsum board. Where colors are not indicated, submit color selection samples of not less than eight of the manufacturer's standard colors.

SD-07 Certificates

Asbestos Free Materials; G AED

Certify that gypsum board types, gypsum backing board types, cementitious backer units, and joint treating materials do not contain asbestos.

SD-08 Manufacturer's Instructions

Material Safety Data Sheets

SD-10 Operation and Maintenance Data

Manufacturer maintenance instructions

Waste Management

1.3 DELIVERY, STORAGE, AND HANDLING

1.3.1 Delivery

Deliver materials in the original packages, containers, or bundles with each bearing the brand name, applicable standard designation, and name of manufacturer, or supplier.

1.3.2 Storage

Keep materials dry by storing inside a sheltered building. Where necessary to store gypsum board units outside, store off the ground, properly supported on a level platform, and protected from direct exposure to rain, snow, sunlight, and other extreme weather conditions. Provide adequate ventilation to prevent condensation.

1.3.3 Handling

Neatly stack gypsum board units flat to prevent sagging or damage to the edges, ends, and surfaces.

1.4 ENVIRONMENTAL CONDITIONS

1.4.1 Temperature

Maintain a uniform temperature of not less than 10 degrees C in the structure for application of gypsum board, and joint treatment materials.

1.4.2 Exposure to Weather

Protect gypsum board unit products from direct exposure to rain, snow, sunlight, and other extreme weather conditions.

PART 2 PRODUCTS

2.1 MATERIALS

Conform to specifications, standards and requirements specified herein. Provide gypsum board types, gypsum backing board types, and joint treating materials manufactured from asbestos free materials only.

2.1.1 Gypsum Board

ASTM C 36/C 36M, or ASTM C 1396/C 1396M.

2.1.1.1 Regular

1200 mm wide, 12.5 mm thick, square or tapered edges.

2.1.2 Regular Water-Resistant Gypsum Backing Board

ASTM C 630/C 630M.

1200 mm wide, 12.5 mm thick, square or tapered edges.

2.1.3 Joint Treatment Materials

As recommended by gypsum board manufacturer.

2.1.3.1 Embedding Compound

Formulated and manufactured for use in embedding tape at gypsum board joints and compatible with tape, substrate and fasteners.

2.1.3.2 All-Purpose Compound

Formulated and manufactured to serve as both a taping and a finishing compound and compatible with tape, substrate and fasteners.

2.1.3.3 Setting or Hardening Type Compound

Formulated and manufactured for use with tape.

2.1.3.4 Joint Tape

As recommended by the gypsum board manufacturer.

2.1.3.5 Corner Tape

As recommended by gypsum board manufacturer.

2.1.4 Fasteners

2.1.4.1 Screws

Steel drill screws for fastening gypsum board to gypsum board, wood framing

members and steel framing members.

2.1.5 Adhesives

Do not use adhesive containing benzene, carbon tetrachloride, or trichloroethylene.

2.1.6 Water

Clean and fresh.

PART 3 EXECUTION

3.1 EXAMINATION

3.1.1 Framing and Furring

Verify that framing and furring are securely attached and of sizes and spacing to provide a suitable substrate to receive gypsum board.

3.2 APPLICATION OF GYPSUM BOARD

Apply gypsum board to framing and furring members in accordance with the requirements specified herein. Apply gypsum board with separate panels in moderate contact; do not force in place. Stagger end joints of adjoining panels. Neatly fit abutting end and edge joints. Use gypsum board of maximum practical length. Cut out gypsum board as required to make neat close joints around openings. Surfaces of gypsum board and substrate members may be bonded together with an adhesive, except where prohibited by fire rating(s). Treat edges of cutouts for plumbing pipes, screwheads, and joints with water-resistant compound as recommended by the gypsum board manufacturer. Provide type of gypsum board for use in each system specified herein as indicated.

3.2.1 Application to Masonry or Concrete Walls

Apply furring to face of cementitious wall. Attach dry wall to ensure that gypsum board does not contact cementitious surface.

3.2.2 Application of Gypsum Board to Steel Framing and Furring

Apply in accordance with manufacturer's recommendations and IBC requirements.

3.2.3 Control Joints

Install expansion and contraction joints in ceilings and walls in accordance with manufacturer's recommendations and IBC requirements, unless indicated otherwise.

3.3 FINISHING OF GYPSUM BOARD

Tape and finish gypsum board in accordance with manufacturer's recommendations. Unless otherwise specified, all gypsum board walls, partitions and ceilings shall be finished with skim coat of finishing or topping compound over entire surface. Provide joint, fastener depression, and corner treatment. Do not use fiber glass mesh tape with conventional drying type joint compounds; use setting or hardening type compounds only.

3.4 PATCHING

Patch surface defects in gypsum board to a smooth, uniform appearance, ready to receive finish as specified.

-- End of Section --

SECTION 09310

CERAMIC TILE, QUARRY TILE, AND PAVER TILE

PART 1 GENERAL

1.1 REFERENCES

The publications listed below form a part of this specification to the extent referenced. The publications are referred to in the text by basic designation only.

AMERICAN NATIONAL STANDARDS INSTITUTE (ANSI)

ANSI A108.1A	(1992) Installation of Ceramic Tile in the Wet-Set Method, with Portland Cement Mortar
ANSI A108.1B	(1992) Installation of Ceramic Tile on a Cured Portland Cement Mortar Setting Bed with Dry-Set or Latex Portland Cement Mortar
ANSI A108.5	(1992) Installation of Ceramic Tile with Dry-Set Portland Cement Mortar or Latex-Portland Cement Mortar
ANSI A118.1	(1992) Dry-Set Portland Cement Mortar
ANSI A118.4	(1992) Latex-Portland Cement Mortar
ANSI A118.6	(1992) Ceramic Tile Grouts
ANSI A137.1	(1988) Ceramic Tile

ASTM INTERNATIONAL (ASTM)

ASTM C 241	(1997) Abrasion Resistance of Stone Subjected to Foot Traffic

DUETSCHES INSTITUTE FUR NORMUNG (DIN)

DIN EN 87	(1992) Ceramic floor and wall tiles: definitions, classification, characteristics and marking.
DIN 1164	(2000) Special Cement - Compositions, specifications and attestation of conformity.

EUROPEAN COMMITTEE FOR STANDARDIZATION (CEN)

EN 87	(1992) Ceramic floor and wall tiles: definitions, classification, characteristics and marking.
EN 12004	(2002) Adhesives for tiles - Definitions

and specifications (includes amedment A1:2002).

MARBLE INSTITUTE OF AMERICA (MIA)

MIA Design Manual (1991) Design Manual IV Dimensional Stone

1.2 SUBMITTALS

Government approval is required for submittals with a "G" designation; submittals not having a "G" designation are for information only. When used, a designation following the "G" designation identifies the office that will review the submittal for the Government. Submit the following in accordance with Section 01330 SUBMITTAL PROCEDURES:

SD-02 Shop Drawings

Detail Drawings; G AED

Drawings showing ceramic tile pattern [elevations][floor plans].

SD-03 Product Data

Tile; G AED
Setting-Bed; G AED
Mortar, Grout, and Adhesive; G AED

Manufacturer's catalog data and preprinted installation and cleaning instructions.

SD-04 Samples

Tile; G AED
Accessories; G AED
Marble Thresholds; G AED
Grout; G AED

Samples of sufficient size to show color range, pattern, type and joints.

SD-07 Certificates

Tile; G AED
Mortar, Grout, and Adhesive; G AED

Certificates indicating conformance with specified requirements. Furnish a master grade certificate for tile.

1.3 DELIVERY AND STORAGE

Materials shall be delivered to the project site in manufacturer's original unopened containers with seals unbroken and labels and hallmarks intact. Materials shall be kept dry, protected from weather, and stored under cover in accordance with manufacturer's instructions.

1.4 ENVIRONMENTAL REQUIREMENTS

Ceramic tile work shall not be performed unless the substrate and ambient

temperature is at least 10 degrees C and rising. Temperature shall be maintained above 10 degrees C while the work is being performed and for at least 7 days after completion of the work. When temporary heaters are used they shall be vented to the outside to avoid carbon dioxide damage to new tilework.

PART 2 PRODUCTS

2.1 TILE

Tile shall be standard grade conforming to ANSI A137.1 or EN 87, DIN EN 87. Containers shall be grade sealed. Seals shall be marked to correspond with the marks on the signed master grade certificate. Color shall be selected from manufacturer's full range of standard colors by Government.

2.1.1 Glazed Wall Tile

Glazed wall tile and trim shall be cushion edged with matte glaze as selected by Government. Tile shall be 150 x 150 mm. Color shall be selected from manufacturer's full range of standard colors by Government.

2.2 WATER

Water shall be potable.

2.3 MORTAR AND GROUT

Mortar, grout, and adhesive shall conform to the following:

2.3.1 Dry-Set Portland Cement Mortar

ANSI A118.1.

2.3.2 Latex-Portland Cement Mortar

ANSI A118.4 or EN 12004.

2.3.3 Ceramic Tile Grout

ANSI A118.6 or DIN 1164; sand portland cement grout, latex-portland cement grout or commercial portland cement grout.

2.4 MARBLE THRESHOLDS

Marble thresholds shall be of size required by drawings or conditions. Marble shall be Group A as classified by MIA Design Manual. Marble shall have a fine sand-rubbed finish and shall be in color as approved by the Government. Marble abrasion shall be not less than 12.0 when tested in accordance with ASTM C 241.

PART 3 EXECUTION

3.1 PREPARATORY WORK AND WORKMANSHIP

Surface to receive tile shall be inspected and shall conform to the requirements of ANSI A108.1A or ANSI A108.1B for surface conditions for the type setting bed specified and for workmanship. Variations of surface to be tiled shall fall within maximum values shown below:

TYPE	WALLS
Dry-Set Mortar	3 mm in 2.4 meters
Latex portland cement mortar	3 mm in 2.4 meters

3.2 GENERAL INSTALLATION REQUIREMENTS

Tile work shall not be started until roughing in for mechanical and electrical work has been completed and tested, and built-in items requiring membrane waterproofing have been installed and tested.

3.3 INSTALLATION OF WALL TILE

3.3.1 Dry-Set Mortar and Latex-Portland Cement Mortar

Dry-set or Latex-portland cement shall be used to install tile in accordance with ANSI A108.5. Latex portland cement shall be used when installing porcelain ceramic tile.

3.4 INSTALLATION OF MARBLE THRESHOLDS

Thresholds shall be installed where indicated in a manner similar to that of the ceramic tile floor. Thresholds shall be the full width of the opening. Head joints at ends shall not exceed 6 mm in width and shall be grouted full as specified for ceramic tile.

3.5 EXPANSION JOINTS

Joints shall be formed every 5 m and sealed as specified in Section 07900 JOINT SEALING.

3.5.1 Walls

Expansion joints shall be provided at control joints in backing material. Wherever backing material changes, an expansion joint shall be installed to separate the different materials.

3.6 CLEANING AND PROTECTING

Upon completion, tile surfaces shall be thoroughly cleaned in accordance with manufacturer's approved cleaning instructions. Acid shall not be used for cleaning glazed tile.

-- End of Section --

SECTION 09421

TERRAZZO TILE

PART 1 GENERAL

1.1 REFERENCES

The publications listed below form a part of this specification to the extent referenced. The publications are referred to in the text by basic designation only.

ASTM INTERNATIONAL (ASTM)

ASTM C 1028	(1996) Standard Test Method for Determining the Static Coefficient of Friction of Ceramic Tile and Other Like Surfaces by the Horizontal Dynamometer Pull-meter Method
ASTM D 2047	(1999) Static Coefficient of Friction of Polish-Coated Floor Surfaces as Measured by the James Machine

1.2 GENERAL REQUIREMENTS

1.2.1 Standard Products

Materials shall be the standard products of a manufacturer regularly engaged in the manufacture of the material and shall essentially duplicate products that have been in satisfactory use at least 2 years prior to bid opening.

1.2.2 Verification of Dimensions

The Contractor shall become familiar with details of the work, verify dimensions in the field, and shall advise the Government of any discrepancy before performing the work.

1.3 SUBMITTALS

Government approval is required for submittals with a "G" designation; submittals not having a "G" designation are for information only. When used, a designation following the "G" designation identifies the office that will review the submittal for the Government. The following shall be submitted in accordance with Section 01330 SUBMITTAL PROCEDURES:

SD-02 Shop Drawings

Terrazzo Tile; G AED

Drawings indicating pattern, size, style, and color of tiles.

SD-03 Product Data

Installation

The manufacturer's printed installation instructions for the conditions indicated.

SD-04 Samples

Terrazzo Tile
Resilient Base
Terrazzo Base/Strips
Metal Edge Strips

Two 150 by 150 mm minimum samples of each color and pattern of terrazzo tile to be used, one 150 mm long sample of metal edge strip and two 100 mm long samples of each type and color of trim pieces and base.

SD-07 Certificates

Terrazzo Tile
Adhesive
Resilient Base

Certificates indicating that the materials conform to the specified requirements and flooring manufacturer's approval of underlayment, adhesive, and cleaners.

1.3 DELIVERY AND STORAGE

Materials shall be delivered to the jobsite in the manufacturer's original unopened containers marked with the manufacturer's brand name, color, and pattern. Materials delivered and placed in storage shall be stored to protect from damage, weather, dirt and dust, or other contaminants.

1.4 SITE CONDITIONS

Tiles shall not be installed until other work that could cause damage to the finished flooring has been completed.

PART 2 PRODUCTS

2.1 TERRAZZO TILE

Terrazzo tile shall be of the indicated colors and shall consist of aggregate, marble or granite chips embedded in a cementitious matrix. Tiles shall be nominal 300 by 300 mm. Tiles shall have a finish as selected from manufacturer's standard range of textures by Government with uniform color distribution of chips. Tile shall have the following properties per ASTM standard.

TERRAZZO TILE PROPERTIES

PROPERTY	TEST METHOD		VALUE
Coefficient of Friction	ASTM D 2047 ASTM C 1028	or	0.5 wet

2.2 COLOR

Color shall be selected from manufacturer's full range of standard colors by Government.

PART 3 EXECUTION

3.1 GENERAL

Flooring and base shall be provided on floor surfaces where indicated. Except as required for installation of new tile, traffic shall be kept off new tile for at least 24 hours after installation.

3.2 INSTALLATION

3.2.1 Tile

Tile shall be installed in a mortar bed 2 to 3 cm thick on top of a 5 cm thick leveling sand layer. Tile shall be layed symmetrical about center lines of rooms or areas. Joints shall be tight, and in alignment. Tile shall be cut to fit snugly at pipes and other vertical surfaces. Joints at pipes shall be sealed. Entire surface of finished tile floor shall be smooth, straight, and free from bleeding , buckles, waves, or projecting tile edges upon completion. Damaged or rejected tiles shall be removed and replaced. Floor shall slope to floor drains.

3.3 CLEANING

Upon completion of the installation, flooring shall be thoroughly cleaned in accordance with the manufacturer's recommendations.

3.4 PROTECTION

The terrazzo tile work shall be covered and protected from damage until completion of the work of all other trades. Defects which develop, such as loose or broken, shall be removed and replaced.

-- End of Section --

SECTION 09900

PAINTS AND COATINGS

PART 1 GENERAL

1.1 REFERENCES

The publications listed below form a part of this specification to the extent referenced. The publications are referred to within the text by the basic designation only.

AMERICAN CONFERENCE OF GOVERNMENTAL INDUSTRIAL HYGIENISTS (ACGIH)

ACGIH Limit Values	(1991-1992) Threshold Limit Values (TLVs) for Chemical Substances and Physical Agents and Biological Exposure Indices (BEIs)
ACGIH TLV-DOC	Documentation of Threshold Limit Values and Biological Exposure Indices

AMERICAN NATIONAL STANDARDS INSTITUTE (ANSI)

ANSI A13.1	(1996) Scheme for the Identification of Piping Systems

ASTM INTERNATIONAL (ASTM)

ASTM D 523	(1999) Standard Test Method for Specular Gloss
ASTM D 2092	(1995) Preparation of Zinc-Coated (Galvanized) Steel Surfaces for Painting
ASTM D 4263	(1983; R 1999) Indicating Moisture in Concrete by the Plastic Sheet Method
ASTM D 4444	(1998) Standard Test Methods for Use and Calibration of Hand-Held Moisture Meters
ASTM F 1869	(1998) Measuring Moisture Vapor Emission Rate of Concrete Subfloor Using Anhydrous Calcium Chloride

CODE OF FEDERAL REGULATIONS (CFR)

29 CFR 1910.1000	Air Contaminants

MASTER PAINTERS INSTITUTE (MPI)

MPI 107	(2001) Rust Inhibitive Primer (Water-Based)

U.S. DEPARTMENT OF DEFENSE (DOD)

MIL-STD-101	(Rev. B) Color Code for Pipelines and for Compressed Gas Cylinders

THE SOCIETY FOR PROTECTIVE COATINGS (SSPC)

SSPC PA 1	(2000) Shop, Field, and Maintenance Painting
SSPC VIS 1	(1989) Visual Standard for Abrasive Blast Cleaned Steel (Standard Reference Photographs)
SSPC VIS 4	(2001) Guide and Reference Photographs for Steel Surfaces Prepared by Waterjetting
SSPC SP 1	(1982) Solvent Cleaning
SSPC SP 6	(2000) Commercial Blast Cleaning (NACE No. 3)
SSPC SP 7	(2000) Brush-Off Blast Cleaning
SSPC SP 10	(1994; R 1995) Near-White Blast Cleaning
SSPC SP 12	(1995) Surface Preparation and Cleaning of Steel and Other Hard Materials by High-and Ultra high-Pressure Water Jetting Prior to Recoating

Government approval is required for submittals with a "G" designation; submittals not having a "G" designation are for information only. When used, a designation following the "G" designation identifies the office that will review the submittal for the Government. The following shall be submitted in accordance with Section 01330 SUBMITTAL PROCEDURES:

The current MPI, "Approved Product List" which lists paint by brand, label, product name and product code as of the date of contract award, will be used to determine compliance with the submittal requirements of this specification. The Contractor may choose to use a subsequent MPI "Approved Product List", however, only one list may be used for the entire contract and each coating system is to be from a single manufacturer. All coats on a particular substrate must be from a single manufacturer. No variation from the MPI Approved Products List is acceptable.

Samples of specified materials may be taken and tested for compliance with specification requirements.

SD-02 Shop Drawings

Piping identification

Submit color stencil codes

SD-03 Product Data

Coating; G AED

Manufacturer's Technical Data Sheets

Sealant

SD-04 Samples

Color; G AED

Submit manufacturer's samples of paint colors. Cross reference color samples to color scheme as indicated.

Textured Wall Coating System; G AED

Sample Textured Wall Coating System Mock-Up; G AED

SD-07 Certificates

Applicator's qualifications

Qualification Testing laboratory for coatings[; G][; G, [_____]]

SD-08 Manufacturer's Instructions

Application instructions

Mixing

Detailed mixing instructions, minimum and maximum application temperature and humidity, potlife, and curing and drying times between coats.

Manufacturer's Material Safety Data Sheets

Submit manufacturer's Material Safety Data Sheets for coatings, solvents, and other potentially hazardous materials, as defined in

FED-STD-313.

1.2 REGULATORY REQUIREMENTS

1.2.1 Lead Content

Do not use coatings having a lead content over 0.06 percent by weight of nonvolatile content.

1.2.2 Chromate Content

Do not use coatings containing zinc-chromate or strontium-chromate.

1.2.3 Asbestos Content

Materials shall not contain asbestos.

1.2.4 Mercury Content

Materials shall not contain mercury or mercury compounds.

1.2.5 Silica

Abrasive blast media shall not contain free crystilline silica.

1.2.6 Human Carcinogens

Materials shall not contain ACGIH Limit Values and ACGIH TLV-DOC confirmed human carcinogens (A1) or suspected human carcinogens (A2).

1.3 PACKAGING, LABELING, AND STORAGE

Paints shall be in sealed containers that legibly show the contract specification number, designation name, formula or specification number, batch number, color, quantity, date of manufacture, manufacturer's formulation number, manufacturer's directions including any warnings and special precautions, and name and address of manufacturer. Pigmented paints shall be furnished in containers not larger than 20 liters. Paints and thinners shall be stored in accordance with the manufacturer's written directions, and as a minimum, stored off the ground, under cover, with sufficient ventilation to prevent the buildup of flammable vapors, and at temperatures between 4 to 35 degrees C.

1.4 SAFETY AND HEALTH

1.4.1 Toxic Materials

To protect personnel from overexposure to toxic materials, conform to the most stringent guidance of:

a. The applicable Manufacturer's Material Safety Data Sheets (MSDS).

b. 29 CFR 1910.1000.

1.5 ENVIRONMENTAL CONDITIONS

1.5.1 Coatings

Do not apply coating when air or substrate conditions are:

a. Less than 3 degrees C above dew point;

b. Below 10 degrees C or over 35 degrees C, unless specifically pre-approved by the Government and the product manufacturer. Under no circumstances shall application conditions exceed manufacturer recommendations.

1.6 COLOR SELECTION

Colors of finish coats shall be as selected by the Government. Manufacturers' names and color identification are used for the purpose of color identification only. Named products are acceptable for use only if they conform to specified requirements. Products of other manufacturers are acceptable if the colors approximate colors indicated and the product conforms to specified requirements.

Tint each coat progressively darker to enable confirmation of the number of coats.

Color, texture, and pattern of wall coating systems shall be as indicated.

1.7 LOCATION AND SURFACE TYPE TO BE PAINTED

1.7.1 Painting Included

Where a space or surface is indicated to be painted, include the following unless indicated otherwise.

a. Surfaces behind portable objects and surface mounted articles readily detachable by removal of fasteners, such as screws and bolts.

b. New factory finished surfaces that require identification or color coding and factory finished surfaces that are damaged during performance of the work.

c. Existing coated surfaces that are damaged during performance of the work.

1.7.1.1 Exterior Painting

Includes new surfaces of the buildings and appurtenances as indicated. Also included are existing coated surfaces made bare by cleaning operations.

a. Colors:

Exterior Concrete, cement plaster: Tan (flat)
Doors, wood fascia and soffits: Gloss white

1.7.1.2 Interior Painting

Includes new surfaces of the buildings and appurtenances unless specifically excluded and existing coated surfaces made bare by cleaning operations. Where a space or surface is to be painted, include the following items, unless indicated otherwise.

a. Other contiguous surfaces.
b. Colors:

Walls: Off-white (semi-gloss)
Ceilings: White (flat, unless noted otherwise)

1.7.2 Painting Excluded

Do not paint the following unless indicated otherwise.

a. Surfaces concealed and made inaccessible by panelboards.

b. Surfaces in concealed spaces. Concealed spaces are defined as furred spaces, and chases.

c. Steel to be embedded in concrete.

d. Copper, stainless steel, aluminum, and lead.

e. Hardware, fittings, and other factory finished items.

1.7.3 Mechanical and Electrical Painting

Includes field coating of interior and exterior new surfaces.

a. Where a space or surface is indicated to be painted, include the following items unless indicated otherwise.

(1) Exposed piping, conduit, and ductwork;

(2) Supports, hangers, air grilles, and registers;

(3) Miscellaneous metalworks.

1.7.4 Definitions and Abbreviations

1.7.4.1 Coating

A film or thin layer applied to a base material called a substrate. A coating may be a metal, alloy, paint, or solid/liquid suspensions on various substrates (metals, plastics, wood, paper, leather, cloth, etc.). They may be applied by electrolysis, vapor deposition, vacuum, or mechanical means such as brushing, spraying, calendering, and roller coating. A coating may be applied for aesthetic or protective purposes or both. The term "coating" as used herein includes emulsions, enamels, stains, varnishes, sealers, epoxies, and other coatings, whether used as primer, intermediate, or finish coat. The terms paint and coating are used interchangeably.

1.7.4.2 DFT or dft

Dry film thickness, the film thickness of the fully cured, dry paint or coating.

1.7.4.3 DSD

Degree of Surface Degradation, the MPI system of defining degree of surface degradation. Five (5) levels are generically defined under the Assessment sections in the MPI Maintenance Repainting Manual.

1.7.4.4 EXT

Short term designation for an exterior coating system.

1.7.4.5 INT

Short term designation for an interior coating system.

1.7.4.6 micron / microns

The metric measurement for 0.001 mm or one/one-thousandth of a millimeter.

1.7.4.7 mm

The metric measurement for millimeter, 0.001 meter or one/one-thousandth of a meter.

1.7.4.8 MPI, Gloss Levels

Use either the MPI system or DIN system of defining gloss. Traditionally, Flat refers to G1/G2, Eggshell refers to G3, Semigloss refers to G5, and Gloss refers to G6. Use DIN gloss levels as defined in DIN 67 530, equivalent to MPI levels below.

Gloss levels are defined by MPI as follows:

Gloss Level	Description	Units @ 60 degrees	Units @ 85 degrees
G1	Matte or Flat	0 to 5	10 max
G2	Velvet	0 to 10	10 to 35
G3	Eggshell	10 to 25	10 to 35
G4	Satin	20 to 35	35 min
G5	Semi-Gloss	35 to 70	
G6	Gloss	70 to 85	
G7	High Gloss		

Gloss is tested in accordance with ASTM D 523. Historically, the Government has used Flat (G1 / G2), Eggshell (G3), Semi-Gloss (G5), and Gloss (G6).

1.7.4.9 MPI System Number

The MPI coating system number in each Division found in either the MPI Architectural Painting Specification Manual or the Maintenance Repainting Manual and defined as an exterior (EXT/REX) or interior system (INT/RIN). The Division number follows the CSI Master Format.

1.7.4.10 Paint

See Coating definition.

PART 2 PRODUCTS

2.1 MATERIALS

Conform to the coating specifications and standards referenced in PART 3. Submit Manufacturer's Technical Data Sheets for specified coatings and solvents.

2.1.1 Wood Putty: Alkyd-based, quick-drying synthetic putty.

Acceptable Products: SCIB Wood Putty by SCIB Paints.

2.1.2 Surface Filler

Basis of Design: SCIB Unoshield 203 by SCIB Paints.

PART 3 EXECUTION

3.1 PROTECTION OF AREAS AND SPACES NOT TO BE PAINTED

Prior to surface preparation and coating applications, remove, mask, or otherwise protect, hardware, hardware accessories, machined surfaces, radiator covers, plates, lighting fixtures, public and private property, and other such items not to be coated that are in contact with surfaces to be coated. Following completion of painting, workmen skilled in the trades involved shall reinstall removed items. Restore surfaces contaminated by coating materials, to original condition and repair damaged items.

3.2 SURFACE PREPARATION

Remove dirt, splinters, loose particles, grease, oil, and other foreign matter and substances deleterious to coating performance as specified for each substrate before application of paint or surface treatments. Oil and grease shall be removed prior to mechanical cleaning. Cleaning shall be programmed so that dust and other contaminants will not fall on wet, newly painted surfaces. Exposed ferrous metals such as nail heads on or in contact with surfaces to be painted with water-thinned paints, shall be spot-primmed with a suitable corrosion-inhibitive primer capable of preventing flash rusting and compatible with the coating specified for the adjacent areas.

3.3 PREPARATION OF METAL SURFACES

3.3.1 New Ferrous Surfaces

a. Ferrous Surfaces including Shop-coated Surfaces and Small Areas That Contain Rust, Mill Scale and Other Foreign Substances: Solvent clean or detergent wash in accordance with SSPC SP 1 to remove oil and grease. Where shop coat is missing or damaged, clean according to SSPC SP 6. Shop-coated ferrous surfaces shall be protected from corrosion by treating and touching up corroded areas immediately upon detection.

b. Surfaces With More Than 20 Percent Rust, Mill Scale, and Other Foreign Substances: Clean entire surface in accordance with SSPC SP 6/SSPC SP 12 WJ-3 .

3.3.2 Final Ferrous Surface Condition:

For abrasive blast cleaned surfaces, the requirements are stated in SSPC SP 7, SSPC SP 6, and SSPC SP 10. As a visual reference, cleaned surfaces shall be similar to photographs in SSPC VIS 1.

For waterjet cleaned surfaces, the requirements are stated in SSPC SP 12. As a visual reference, cleaned surfaces shall be similar to photographs in SSPC VIS 4.

3.3.3 Galvanized Surfaces

a. New Galvanized Surfaces With Only Dirt and Zinc Oxidation Products: Clean with solvent, steam, or non-alkaline detergent solution in accordance with SSPC SP 1. If the galvanized metal has been passivated or stabilized, the coating shall be completely removed by brush-off abrasive blast. New galvanized steel to be coated shall not be "passivated" or "stabilized" If the absence of hexavalent stain inhibitors is not documented, test as described in ASTM D 2092, Appendix X2, and remove by one of the methods described therein.

3.3.4 Non-Ferrous Metallic Surfaces

Aluminum and aluminum-alloy, lead, copper, and other nonferrous metal surfaces.

a. Surface Cleaning: Solvent clean in accordance with SSPC SP 1 and wash with mild non-alkaline detergent to remove dirt and water soluble contaminants.

3.4 PREPARATION OF CONCRETE AND CEMENTITIOUS SURFACE

3.4.1 Concrete and Masonry

a. Curing: Concrete, and cement plaster surfaces shall be allowed to cure for a minimum of 7 days and as recommended by manufacturer before painting.

b. Surface Cleaning: Remove the following deleterious substances.

(1) Dirt, Grease, and Oil: Wash new surfaces with a solution composed of 0.2 liter trisodium phosphate, 0.1 liter household detergent, and 6.4 liters of warm water. Then rinse thoroughly with fresh water.

(2) Fungus and Mold: Wash new surfaces with a solution composed of 0.2 liter trisodium phosphate, 0.1 liter household detergent, 1.6 liters 5 percent sodium hypochlorite solution and 4.8 liters of warm water. Rinse thoroughly with fresh water.

(3) Paint and Loose Particles: Remove by wire brushing.

(4) Efflorescence: Remove by scraping or wire brushing followed by washing with a 5 to 10 percent by weight aqueous solution of hydrochloric (muriatic) acid. Do not allow acid to remain on the surface for more than five minutes before rinsing with fresh water. Do not acid clean more than 0.4 square meter of surface, per workman, at one time.

c. Cosmetic Repair of Minor Defects: Repair or fill minor defects, including but not limited to spalls, in accordance with manufacturer's recommendations and prior to coating application.

d. Allowable Moisture Content: Latex coatings may be applied to damp surfaces, but not to surfaces with droplets of water. Do not apply epoxies to damp vertical surfaces as determined by ASTM D 4263 or horizontal surfaces that exceed 3 lbs of moisture per 1000 square feet in 24 hours as determined by ASTM F 1869. In all cases follow manufacturers recommendations.

3.4.2 Gypsum Board, Plaster, and Exterior Cement Plaster

a. Surface Cleaning: Plaster and Exterior Cement Plaster shall be clean and free from loose matter; gypsum board shall be dry. Remove loose dirt and dust by brushing with a soft brush, rubbing with a dry cloth, or vacuum-cleaning prior to application of the first coat material. A damp cloth or sponge may be used if paint will be water-based.

b. Repair of Minor Defects: Prior to painting, repair joints, cracks, holes, surface irregularities, and other minor defects with patching plaster or spackling compound and sand smooth.

c. Allowable Moisture Content: Latex coatings may be applied to damp surfaces, but not surfaces with droplets of water. Do not apply epoxies to damp surfaces as determined by ASTM D 4263. New plaster to be coated shall have a maximum moisture content of 8 percent, when measured in accordance with ASTM D 4444, Method A,

unless otherwise authorized. In addition to moisture content requirments, allow new plaster to age a minimum of 7 days before preparation for painting or as recommended by manufacturer.

3.5 PREPARATION OF WOOD AND PLYWOOD SURFACES

3.5.1 New Plywood and Wood Surfaces:

a. Wood surfaces shall be cleaned of foreign matter.

   Surface Cleaning: Surfaces shall be free from dust and other deleterious substances and in a condition approved by the Government prior to receiving paint or other finish. Do not use water to clean uncoated wood.

b. Moisture content of the wood shall not exceed 12 percent as measured by a moisture meter in accordance with ASTM D 4444, Method A, unless otherwise authorized.

c. Wood surfaces adjacent to surfaces to receive water-thinned paints shall be primed and/or touched up before applying water-thinned paints.

d. Cracks and Nailheads: Set and putty stop nailheads and putty cracks after the prime coat has dried.

e. Cosmetic Repair of Minor Defects:

   (1) Knots and Resinous Wood: Prior to application of coating, cover knots and stains with two or more coats of 1.3-kg-cut shellac varnish, plasticized with 0.14 liters of castor oil per liter. Prime before applying any putty over shellacked area.

   (2) Open Joints and Other Openings: Fill with whiting putty, linseed oil putty. Sand smooth after putty has dried.

   (3) Checking: Where checking of the wood is present, sand the surface, wipe and apply a coat of pigmented orange shellac. Allow to dry before paint is applied.

f. Prime Coat For New Exterior Surfaces: Prime coat trim before wood becomes dirty, warped, or weathered.

3.6 APPLICATION

3.6.1 Coating Application

Painting practices shall comply with laws enacted to insure compliance with International Building Code requirements and ASTM standards clean air standards. Apply coating materials in accordance with SSPC PA 1. SSPC PA 1 methods are applicable to all substrates, except as modified herein.

At the time of application, paint shall show no signs of deterioration. Uniform suspension of pigments shall be maintained during application.

Unless otherwise specified or recommended by the paint manufacturer, paint may be applied by brush, roller, or spray. Rollers for applying paints and enamels shall be of a type designed for the coating to be applied and the surface to be coated.

Paints, except water-thinned types, shall be applied only to surfaces that are completely free of moisture as determined by sight or touch.

Thoroughly work coating materials into joints, crevices, and open spaces. Special attention shall be given to insure that all edges, corners, crevices, welds, and rivets receive a film thickness equal to that of adjacent painted surfaces.

Each coat of paint shall be applied so dry film shall be of uniform thickness and free from runs, drops, ridges, waves, pinholes or other voids, laps, brush marks, and variations in color, texture, and finish. Hiding shall be complete.

Touch up damaged coatings before applying subsequent coats. Interior areas shall be broom clean and dust free before and during the application of coating material.

a. Drying Time: Allow time between coats, as recommended by the coating manufacturer, to permit thorough drying, but not to present topcoat adhesion problems. Provide each coat in specified condition to receive next coat.

b. Primers, and Intermediate Coats: Do not allow primers or intermediate coats to dry more than 30 days, or longer than recommended by manufacturer, before applying subsequent coats. Follow manufacturer's recommendations for surface preparation if primers or intermediate coats are allowed to dry longer than recommended by manufacturers of subsequent coatings. Each coat shall cover surface of preceding coat or surface completely, and there shall be a visually perceptible difference in shades of successive coats.

c. Finished Surfaces: Provide finished surfaces free from runs, drops, ridges, waves, laps, brush marks, and variations in colors.

3.6.2 Mixing and Thinning of Paints

Reduce paints to proper consistency by adding fresh paint, except when thinning is mandatory to suit surface, temperature, weather conditions, application methods, or for the type of paint being used. Obtain written permission from the Government to use thinners. The written permission shall include quantities and types of thinners to use.

When thinning is allowed, paints shall be thinned immediately prior to application with not more than 0.125 L of suitable thinner per liter. The use of thinner shall not relieve the Contractor from obtaining complete hiding, full film thickness, or required gloss. Thinning shall not cause the paint to exceed limits on volatile organic compounds. Paints of different manufacturers shall not be mixed.

3.6.3 Coating Systems

a. Systems by Substrates: Apply coatings that conform to the respective specifications listed in the following Tables:

Table

Division 3. Exterior Concrete Paint Table

Division 4. Exterior Concrete Masonry Units Paint Table
Division 5. Exterior Metal, Ferrous and Other Metals Paint Table
Division 6. Exterior Wood; Dressed Lumber, Paint Table
Division 6: Exterior Plastics Paint Table
Division 9: Exterior Cement Plaster Paint Table
Division 3. Interior Concrete Paint Table
Division 5. Interior Metal, Ferrous and Non-Ferrous Paint Table
Division 6. Interior Wood Paint Table
Division 9: Interior Plaster, Paint Table

b. Minimum Dry Film Thickness (DFT): Apply paints, primers, varnishes, enamels, undercoats, and other coatings to a minimum dry film thickness of 0.038 mm each coat unless specified otherwise in the Tables. Coating thickness where specified, refers to the minimum dry film thickness.

c. Coatings for Surfaces Not Specified Otherwise: Coat surfaces which have not been specified, the same as surfaces having similar conditions of exposure.

d. Existing Surfaces Damaged During Performance of the Work, Including New Patches In Existing Surfaces: Coat surfaces with the following:

(1) One coat of primer.

(2) One coat of undercoat or intermediate coat.

(3) One topcoat to match adjacent surfaces.

3.7 COATING SYSTEMS FOR METAL

Apply coatings of Tables in Division 5 for Exterior and Interior.

a. Apply specified ferrous metal primer on the same day that surface is cleaned, to surfaces that meet all specified surface preparation requirements at time of application.

b. Inaccessible Surfaces: Prior to erection, use one coat of specified primer on metal surfaces that will be inaccessible after erection.

c. Shop-primed Surfaces: Touch up exposed substrates and damaged coatings to protect from rusting prior to applying field primer.

e. Pipes and Tubing: The semitransparent film applied to some pipes and tubing at the mill is not to be considered a shop coat, but shall be overcoated with the specified ferrous-metal primer prior to application of finish coats.

f. Exposed Nails, Screws, Fasteners, and Miscellaneous Ferrous Surfaces. On surfaces to be coated with water thinned coatings, spot prime exposed nails and other ferrous metal with latex primer MPI 107.

3.8 COATING SYSTEMS FOR CONCRETE AND CEMENTITIOUS SUBSTRATES

Apply coatings of Tables in Divisions 3, 4, and 9 for Exterior and Interior.

3.9 COATING SYSTEMS FOR WOOD AND PLYWOOD

Apply coatings of Tables in Division 6 for Exterior and Interior. Prior to erection, apply two coats of specified primer to treat and prime wood and plywood surfaces which will be inaccessible after erection.

3.10 PIPING IDENTIFICATION

Piping Identification, Including Surfaces In Concealed Spaces: Provide in accordance with MIL-STD-101, ANSI A13.1. Place stenciling in clearly visible locations. On piping not covered by MIL-STD-101, ANSI A13.1, stencil approved names or code letters, in letters a minimum of 13 mm high for piping and a minimum of 50 mm high elsewhere. Stencil arrow-shaped markings on piping to indicate direction of flow using black stencil paint.

3.11 INSPECTION AND ACCEPTANCE

In addition to meeting previously specified requirements, demonstrate mobility of moving components, including swinging and sliding doors, cabinets, and windows with operable sash, for inspection by the Government. Perform this demonstration after appropriate curing and drying times of coatings have elapsed and prior to invoicing for final payment.

3.12 PAINT TABLES

All spreading rates are maximum values.

3.12.1 Exterior Paint Tables

All manufacturers specific product listed in following tables shall be bases of design.

DIVISION 3: EXTERIOR CONCRETE PAINT TABLE

A. New concrete; vertical surfaces, excluding tops of slabs:

1. Acrylic Emulsion:
   New; (Matte)
   Primer: SCIB SEALCOAT 101.
   Spreading (coverage) Rate: 10 to 16 square meters per liter per coat.

   Intermediate and Topcoat: Exterior waterborne, acrylic copolymer emulsion, matte. SCIB Acrycoat Matt 344.
   Spreading (coverage) Rate: 10 to 12 square meters per liter per coat.

2. Acrylic:
   Primer: Mastercure 101.
   Spreading (coverage) Rate: 5 square meters per liter per coat.
   Intermediate and Topcoat: Masterseal 300H.
   Spreading (coverage) Rate: 1 to 2 square meters per liter per coat.

DIVISION 4: EXTERIOR CONCRETE MASONRY UNITS PAINT TABLE

A. New concrete masonry on uncoated surface:

1. Latex:
   New; (Matte)
   Primer/Block filler: SCIB SEALCOAT 101.
   Spreading (coverage) Rate: 10 to 16 square meters per liter per coat.

DIVISION 4: EXTERIOR CONCRETE MASONRY UNITS PAINT TABLE

Intermediate: Exterior waterborne, acrylic copolymer emulsion, matte. SCIB Acrycoat Matt 344.
Spreading (coverage) Rate: 10 to 12 square meters per liter per coat.
Topcoat: Exterior waterborne, acrylic copolymer emulsion, matte. SCIB Acrycoat Matt 344.
Spreading (coverage) Rate: 10 to 12 square meters per liter per coat.

DIVISION 5: EXTERIOR METAL, FERROUS AND OTHER METALS PAINT TABLE

STEEL / FERROUS SURFACES

A. New Steel that has been blast-cleaned to SSPC SP 6:

1. Alkyd
New; (Gloss)
Primer: Alkyd metal primer: SCIB Rust Proof 111 or equal.
Spreading (coverage) Rate: 7 to 11 square leters per liter.
Intermediate and Topcoat: High gloss alkyd enamel. SCIB Scilac Gloss 425 or equal.
Spreading (coverage) 11 to 15 square meters per liter per coat.

2. Alkyd (Alternate)
New; (Gloss)
Primer: Alkyd metal primer: Betek Antirust for doors.
Spreading (coverage) Rate: 55 to 85 mL per square meter per coat.
Intermediate and Topcoat: High gloss alkyd enamel. Betek Synthetic Paint or equal.
Spreading (coverage) 50 to 65 mL per square meter per coat.

DIVISION 6: EXTERIOR WOOD; DRESSED LUMBER PAINT TABLE

A. New Dressed lumber, Wood and plywood, trim, not otherwise specified:

1. Alkyd (Gloss)
Primer: Aklyd primer. SCIB Wood Primer and Undercoat or wood filler to fill heavy imperfection in wood or equal.
Spreading (coverage) Rate: 13 to 16 square meters per liter
Intermediate and Topcoat: High gloss alkyd enamel. SCIB Scilac Gloss 425 or equal.
Spreading (coverage) Rate: 11 to 15 square meters per liter per coat.

2. Alkyd (Alternate)
New; (Gloss)
Primer: Alkyd metal primer: Betek Synthetic Primer.
Spreading (coverage) Rate: 55 to 85 mL per square meter per coat.
Intermediate and Topcoat: High gloss alkyd enamel. Betek Synthetic Paint or equal.
Spreading (coverage) 50 to 65 mL per square meter per coat.

DIVISION 6: EXTERIOR PLASTICS PAINT TABLE

A. New PVC:

1. Acrylic Emulsion (Flat)
Primer: Interior/Exterior high performance acrylic primer. SCIB SEALCOAT 101 or equal.
Spreading (coverage) Rate: 10 to 16 square meters per liter per coat.

DIVISION 6: EXTERIOR PLASTICS PAINT TABLE
Intermediate and Topcoat: Intermediate Exterior latex, flat. SCIB Acrycoat Matt 344 or equal.
Spreading (coverage) Rate: 10 to 12 square meters per liter per coat.

DIVISION 9: EXTERIOR CEMENT PLASTER PAINT TABLE

A. New exterior cement plaster:

1. Acrylic Emulsion
New; (Flat)
Primer, Intermediate, and Topcoat: Exterior waterborne, acrylic copolymer emulsion, matte.
Primer: Interior/exterior high performance acrylic copolymer primer. SCIB SEALCOAT 101 or equal.
Spreading (coverage) Rate: 10 to 16 square meters per liter per coat.
Intermediate and Topcoat: Exterior waterborne, acrylic copolymer emulsion, matte. SCIB Acrycoat Matt 344 or equal.
Spreading (coverage) Rate: 10 to 12 square meters per liter per coat.

2. Acrylic:
Primer: Mastercure 101.
Spreading (coverage) Rate: 5 square meters per liter per coat.
Intermediate and Topcoat: Masterseal 300H.
Spreading (coverage) Rate: 1 to 2 square meters per liter per coat.

3. Acrylic
Acrylic emulsion flat.
Primer: Alkyd metal primer: Betek Universal Primer.
Spreading (coverage) Rate: 100 mL per square meter per coat.
Intermediate and Topcoat: Acrylic emulsion, Betekril or equal.
Spreading (coverage) 100 to 135 mL per square meter per coat.

3.12.2 Interior Paint Tables

DIVISION 3: INTERIOR CONCRETE PAINT TABLE

A. New concrete surfaces: Epoxy as follows:

1. Epoxy Paint
New
Primer: Epoxy primer undercoat. Jotafloor Sealer, FOSROC Nitoprime 25 (for Nitoflor FC140).
Spreading (coverage) Rate: 25 square meters per pack (Nitoprime), 10 square meter/liters per Jotafloor.
Intermediate and Topcoat: Solvent based, Two component epoxy coating. FOSROC Nitoflor FC140, Amerilock 400C, Jotafloor Top coat, or equal.
Spreading (coverage) Rate: 35 to 40 square meters per pack per coat 10 square meters/L for Jotafloor.

2. Non Slip Epoxy Paint
New
Primer: Jotafloor solvent free primer
Spreading (coverage): 10 square meter/Liter
Aggregate: Jotafloor non slip aggregate (for jotun)
Spreading (coverage): 3 kg/square meter
Top coat: Jotafloor Coating or Amerlock 400 C NS (3 componants)

DIVISION 3: INTERIOR CONCRETE PAINT TABLE
Spreading (coverage): 3.3 meter square/liter (Jotafloor)

DIVISION 4: INTERIOR CONCRETE MASONRY UNITS PAINT TABLE

A. New concrete masonry on uncoated surface:

1. Epoxy Paint
New; (Semi-gloss)
Primer: Epoxy primer undercoat. FOSROC Nitoprime 25 (for Nitoflor FC140).
Spreading (coverage) Rate: 25 square meters per pack.
Intermediate and Topcoat: Solvent based, two component epoxy coating. FOSROC Nitoflor FC140, Amerilock 400C, or equal.
Spreading (coverage) Rate: 35 to 40 square meters per pack per coat.

DIVISION 5: INTERIOR METAL, FERROUS AND NON-FERROUS PAINT TABLE

INTERIOR STEEL / FERROUS SURFACES

A. Metal, Mechanical, Electrical, Surfaces adjacent to painted surfaces (Match surrounding finish), exposed copper piping, and miscellaneous metal items not otherwise specified except floors, hot metal surfaces, and new prefinished equipment:

1. Alkyd (Gloss)
Primer: Alkyd metal primer. SCIB Rust Proff 111 or equal.
Spreading (coverage) Rate: 7 to 11 square meters per liter.
Intermediate, and Topcoat: High gloss alkyd enamel. SCIB Scilac Gloss 425 or equal.
Spreading (coverage) Rate: 11 to 15 square meters per liter per coat.

2. Alkyd (Alternate)
New; (Gloss)
Primer: Alkyd metal primer: Betek antirust.
Spreading (coverage) Rate: 55 to 85 mL per square meter per coat.
Intermediate and Topcoat: High gloss alkyd enamel. Betek Synthetic Paint or equal.
Spreading (coverage) 50 to 65 mL per square meter per coat.

B. All exposed metal surfaces including, but not limited to lintels, louvers, doors and door frames found in Water Booster Pump Station Water Disinfection Room No 101 and Dry Storage Room Room No 103. (Process equipment and piping covered elsewhere).

1. Epoxy
Primer: 1 Coat :Sherwin Williams Kem Bond HS primer (low VOC) B50Z Series or equal.
Primer Shop Primed surfaces: Compatible zinc-rich primer as furnished for materials requiring touchup
Finish Coats: 1 coat Sherwin Williams “Tile-Clad” high-solids epoxy B62Z-100 Series or equal.
Spreading rate: per manufactures recommendation

DIVISION 6: INTERIOR WOOD PAINT TABLE

A. New Wood and plywood not otherwise specified:

DIVISION 6: INTERIOR WOOD PAINT TABLE

1. Alkyd (Gloss)
   Primer: Alkyd primer. SCIB Wood Primer and Undercoat or wood filler to fill heavy imperfection in wood or equal.
   Spreading (coverage) Rate: 13 to 16 square meters per liter.
   Intermediate and Topcoat: High gloss alkyd enamel. SCIB Scilac Gloss 425 or equal.
   Spreading (coverage) Rate: 11 to 15 square meters per liter per coat.

2. Alkyd (Alternate)
   New; (Gloss)
   Primer: Alkyd metal primer: Betek Synthetic Primer for doors.
   Spreading (coverage) Rate: 55 to 85 mL per square meter per coat.
   Intermediate and Topcoat: High gloss alkyd enamel. Betek Synthetic Paint or equal.
   Spreading (coverage) 50 to 65 mL per square meter per coat.

DIVISION 9: INTERIOR PLASTER AND DRYWALL PAINT TABLE

A. New Plaster not otherwise specified:

1. Acrylic Emulsion (Semigloss)
   Primer: Interior, waterborne, acrylic copolymer emulsion transparent primer. SCIB SEALCOAT 101 or equal.
   Spreading (coverage) Rate: 10 to 16 square meters per liter per coat.
   Intermediate and Topcoat: Interior waterborne semigloss 100% acrylic emulsion. SCIB Acrycoat Silk 366 or equal.
   Spreading (coverage) Rate: 6 to 9 sqaure meters per liter per coat.

2. Acrylic
   New; Semi Gloss
   Primer: Alkyd metal primer: Betek Universal Primer.
   Spreading (coverage) Rate: 100 mL per square meter per coat.
   Intermediate and Topcoat: High gloss alkyd enamel. Betek satin Paint or equal.
   Spreading (coverage) 55 mL per square meter per coat.

B. New Plaster and Gypsum board; ceilings:

1. Acrylic Emulsion (Matte)
   Primer: SCIB SEALCOAT 101 or equal.
   Spreading (coverage) Rate: 5 to 7 sqaure meters per liter per coat.
   Topcoat: SCIB ACRYCOAT matt 344 or equal.
   Spreading (coverage) Rate: 5 to 7 sqaure meters per liter per coat.

2. Acrylic
   New; Matt
   Primer: Alkyd metal primer: Betek Universal Primer for Plaster ceiling & Betek GYP primer
   Spreading (coverage) Rate: 100 mL per square meter per coat.
   Intermediate and Topcoat: High gloss alkyd enamel. Betek Ceiling Satin. or equal.
   Spreading (coverage) 65 mL per square meter per coat.

3. Acrylic
   New; Matt
   Primer: Alkyd metal primer: Betek Hygienic Primer.
   Spreading (coverage) Rate: 90 mL per square meter per coat.
   Intermediate and Topcoat: High gloss alkyd enamel. Betek Hygienic

DIVISION 9: INTERIOR PLASTER AND DRYWALL PAINT TABLE

Paint or equal.

Spreading (coverage) 55 mL per square meter per coat.

-- End of Section --

SECTION 10191

CUBICLE CURTAIN, TRACK AND HARDWARE

PART 1 GENERAL

1.1 REFERENCES

The publications listed below form a part of this specification to the extent referenced. The publications are referred to in the text by the basic designation only.

ALUMINUM ASSOCIATION (AA)

AA DAF-45	(1997) Designation System for Aluminum Finishes

ASTM INTERNATIONAL (ASTM)

ASTM B 221M	(2000) Aluminum and Aluminum-Alloy Extruded Bars, Rods, Wire, Profiles, and Tubes (Metric)
ASTM B 456	(1995) Electrodeposited Coatings of Copper Plus Nickel Plus Chromium and Nickel Plus Chromium

1.2 SUBMITTALS

Government approval is required for submittals with a "G" designation; submittals not having a "G" designation are for information only. When used, a designation following the "G" designation identifies the office that will review the submittal for the Government. The following shall be submitted in accordance with Section 01330 SUBMITTAL PROCEDURES:

SD-02 Shop Drawings

Cubicle track layout

SD-08 Manufacturer's Instructions

Cubicle track installation

1.3 DELIVERY AND STORAGE

Deliver tracks, curtains, and accessory items to site in unopened containers clearly labeled with manufacturer's name and contents. Store in safe, dry, and clean location. Do not open containers until contents are to be installed.

1.4 QUALITY CONTROL

Allow smooth, rapid, and complete travel with no gaps at corners or ends of track. The track of an individual room or cubicle shall have no joints. Form corner bends in a single continuous piece on a 300 mm radius to exactly 90 degrees. Other track lengths to 4800 mm shall have no joints.

PART 2 PRODUCTS

2.1 TRACK SYSTEM

Track shall be suspended or ceiling surface mounted. Bends shall be minimum 300 mm radius.

2.1.1 Extruded Aluminum Tracks

ASTM B 221M and ASTM B 456; alloy 6063-TS, channel shape 35-mm wide by 19-mm deep,, 1.25 mm minimum wall thickness. Inside raceway to be smooth for interior carriers and must be able to receive wheel carriers. Finish as designated for aluminum finishes in AA DAF-45.

2.1.2 End Stop and Pull-out

Fabricate from aluminum or nylon with an anodized finish matching the track finish.

2.1.3 Metal Finishes

Satin, clear anodized.

2.2 CARRIER UNIT

2.2.1 Curtain Carriers

Nylon axle and two-wheel carriers with nickel-plated, beaded, drop chain and hook. Furnish one carrier for each 150 mm of curtain width unless otherwise recommended by manufacturer.

2.3 CURTAIN

2.3.1 Curtain Fabric

2.3.1.1 Fiber Content

100 percent polyester, inherently and permanently flame-resistant.

2.3.1.2 Pattern and Color

Fabric color and pattern shall be selected from manufacturer's full range by Contracting Officer. Items where color, pattern, or fabric are be selected by Contracting Officer from manufacturer's full range shall have choices submitted to Contracting Officer simultaneously with other items requiring finish selection.

2.3.2 Mesh Top

12 mm, open nylon mesh.

2.3.3 Grommets

Two-piece, rolled-edge, rustproof, nickel-plated brass; spaced not more than 152 mm o.c.; machined into top hem.

2.4 FASTENERS

Stainless steel.

2.5 CURTAIN FABRICATION

Provide curtain fabrication as indicated below:

2.5.1 Width

Width shall be equal to track length from which curtain is hung plus 10 percent added fullness, but not less than 305 mm added fullness.

2.5.2 Length

Length shall be equal to floor-to-track height, minus 305 mm distance above finished floor.

2.5.3 Bottom Hem

Not less than 25.4 mm and not more than 38 mm wide, not less than double thickness and double stitched.

2.5.4 Side Hems

Not less than 12.7 mm and not more than 31.8 mm wide, with not less than double thickness edges, and lock stitched.

2.5.5 Vertical Hems

Not less than 12.7 mm wide, double turned and double stitched.

PART 3 EXECUTION

3.1 INSTALLATION

3.1.1 General

Verify dimensions prior to installation. Install track after painting and finishing operations are complete. Provide labor and all materials indicated, specified or necessary for a complete finished installation. Install track plumb, level and true, and securely anchored to the ceiling to form a neat, rigid installation. Remove damaged or defective components and replace with new components.

3.1.2 Installation Details

Install tracks ceiling surface mounted. Install tracks where indicated. Install end cap at each end of the track and pull-out at the end where curtains are stacked to permit insertion and removal of carrier units. Securely fasten end stops to prevent their being forced out by striking weight of carrier units.

-- End of Section --

SECTION 10201

METAL WALL AND DOOR LOUVERS

PART 1 GENERAL

1.1 REFERENCES

The publications listed below form a part of this specification to the extent referenced. The publications are referred to in the text by the basic designation only.

ASTM INTERNATIONAL (ASTM)

ASTM A 653/A 653M	(2001a) Steel Sheet, Zinc-Coated (Galvanized) or Zinc-Iron Alloy-Coated (Galvannealed) by the Hot-Dip Process

1.2 DELIVERY, STORAGE, AND PROTECTION

Deliver materials to the site in an undamaged condition. Carefully store materials off the ground to provide proper ventilation, drainage, and protection against dampness. Louvers shall be free from nicks, scratches, and blemishes. Replace defective or damaged materials with new.

PART 2 PRODUCTS

2.1 MATERIALS

2.1.1 Galvanized Steel Sheet

ASTM A 653/A 653M, coating designation Z275.

2.2 METAL WALL LOUVERS

Weather resistant type, with bird screens and made to withstand a wind load of not less than 1.2 kilopascals.

2.2.1 Formed Metal Louvers

Formed of aluminum sheet not less than 1.2 mm thick.

2.2.2 Mullions and Mullion Covers

Same material and finish as louvers. Provide mullions for all louvers more than 1500 mm in width at not more than 1500 mm on centers. Provide mullions covers on both faces of joints between louvers.

2.2.3 Screens and Frames

Provide screens as detailed below. Mount screens in removable, rewirable frames of same material and finish as the louvers.

2.2.3.1 Louver Screening for Louvers

Use the following for applications as indicated on Drawings.

a. Bird Screening: Galvanized steel or Aluminum; 12.0-mm square mesh.

b. Insect Screening: Aluminum, 1.4-by-1.6-mm mesh, 0.30-mm wire.

2.3 DOOR LOUVERS

Inverted "V" sightproof type not less than 25 mm thick with matching metal trim. Louvers for exterior doors shall be weather resistant type.

2.3.1 Formed Metal Door Louvers

Fabricate of 0.9 mm thick steel sheet or sheet aluminum not less than 1.25 mm thick. Trim shall be beveled "Z" molding both sides.

2.3.2 Screens and Frames

For exterior doors, provide aluminum insect screens, 1.4-by-1.6-mm mesh, 0.30-mm wire or 1.4-by-1.8-mm mesh, 0.30-mm wire. Mount screens in removable, rewirable frames of same material and finish as the louvers.

2.3.3 Louvers for Rated Openings

Basis of Design: For doors rated up to 1-1/2 hours, use Air Louvers Inc., Model 1900-A.

2.4 FASTENERS AND ACCESSORIES

Provide stainless steel screws and fasteners for aluminum louvers and zinc-coated screws and fasteners for steel louvers. Provide other accessories as required for complete and proper installation.

For galvanized security grilles for use at the Ammunition Storage Building louver applications, refer to Section 05500.

2.5 FINISHES

2.5.1 Steel

Provide factory-applied coating. Clean and phosphate treat exposed surfaces and apply rust-inhibitive primer and baked enamel finish coat, 0.025 mm minimum total dry film thickness, color as selected by Government.

PART 3 EXECUTION

3.1 INSTALLATION

3.1.1 Wall Louvers

Install using stops or moldings, flanges, strap anchors, or jamb fasteners as appropriate for the wall construction and in accordance with manufacturer's recommendations.

3.1.2 Door Louvers

Install louvers in wood doors by using metal "Z" or "L" moldings. Fasten moldings to door with screws.

3.1.3 Screens and Frames

Attach frames to louvers with screws or bolts.

3.2 PROTECTION FROM CONTACT OF DISSIMILAR MATERIALS

3.2.1 Copper or Copper-Bearing Alloys

Paint copper or copper-bearing alloys in contact with dissimilar metal with heavy-bodied bituminous paint or separate with inert membrane.

3.2.2 Aluminum

Where aluminum contacts metal other than zinc, paint the dissimilar metal with a primer and two coats of aluminum paint.

3.2.3 Metal

Paint metal in contact with mortar, concrete, or other masonry materials with alkali-resistant coatings such as heavy-bodied bituminous paint.

-- End of Section --

SECTION 10270

ACCESS FLOORING

PART 1 GENERAL

1.1 REFERENCES

The publications listed below form a part of this specification to the extent referenced. The publications are referred to within the text by the basic designation only.

ASTM INTERNATIONAL (ASTM)

ASTM E 84	(2004) Surface Burning Characteristics of Building Materials
ASTM F 1066	(1999) Vinyl Composition Floor Tile

CEILINGS & INTERIOR SYSTEMS CONSTRUCTION ASSOCIATION (CISCA)

CISCA Access Floors	(1987) Test Procedures for Access Floors

NATIONAL FIRE PROTECTION ASSOCIATION (NFPA)

NFPA 99	(1999) Health Care Facilities

1.2 SUBMITTALS

Government approval is required for submittals with a "G" designation; submittals not having a "G" designation are for information only. When used, a designation following the "G" designation identifies the office that will review the submittal for the Government. The following shall be submitted in accordance with Section 01330 SUBMITTAL PROCEDURES:

SD-02 Shop Drawings

Detail Drawings; G AED

Drawings showing details at floor perimeter, method of grounding, description of shop coating, installation height above structural floor, and other details as specified.

SD-03 Product Data

Access Flooring System

Manufacturer's descriptive data, catalog cuts, and installation instructions. The data shall include information about any design and production techniques, procedures and policies used to conserve energy, reduce material, improve waste management or incorporate green building/recycled products into the manufacturer of their components or products. Cleaning and maintenance instructions shall be included.

SD-04 Samples

Floor Panels
Panel Support System

One sample of each panel type and suspension system proposed for use.

SD-05 Design Data

Seismic Calculations

Design calculations which demonstrate that the proposed floor system meets requirements for seismic loading. Certified copies of test reports may be submitted in lieu of calculations.

SD-06 Test Reports

Factory Tests
Electrical Resistance
Field Tests

Certified copies of test reports from an approved testing laboratory, attesting that the proposed floor system components meet the performance requirements specified.

SD-07 Certificates

Access Flooring System

Certificate of compliance attesting that the access floor system meets specification requirements.

1.3 SYSTEM DESCRIPTION

Access flooring shall be installed at the location and elevation and in the arrangement shown on the drawings. The floor system shall be of the stringer type, complete with all supplemental items, and shall be the standard product of a manufacturer specializing in the manufacture of access flooring systems. Provide for self-alignment of floor panels, adjustable pedestals and readily removable floor panels covered as specified. Lateral stability of floor system shall be independent of panels. Finished assembly shall be rigid and free of vibration, noises, and rocking panels. Provide bolted stringer system for equipotential plane grounding.

1.3.1 Allowable Tolerances

a. Floor Panel Flatness: Plus or minus 0.5 mm on diagonal on top of panel or underneath edge.

b. Floor Panel Length: Plus or minus 0.4 mm .

c. Floor Panel Squareness: Plus or minus 0.5 mm in panel length.

d. Finish Floor: Level within plus or minus 1.6 mm in 2 meters , and plus or minus 2.5 mm for entire floor.

1.3.2 Floor Panels

Floor panel testing shall be conducted in accordance with CISCA Access Floors. When tested as specified, all deflection and deformation measurements shall be made at the point of load application on the top surface of the panel. Floor panels shall be capable of supporting the following loads:

a. Concentrated load of 4450 N on 645 square mm, at any point on panel, without deflecting more than 2 mm, with a safety factor of 2 based on static design load, without permanent deformation in excess of 0.25mm in any of the specified tests.

b. Uniform live load of 14.36 kN/square meter , without deflecting more than 1 mm .

c. A rolling load of 2670 N applied through a 75 mm diameter by 30 mm wide caster for 10 cycles over the same path, without deflecting more than 1 mm and without permanent deformation in excess of 0.5 mm .

d. An impact load of 68 kg on 645 square mm from a height of 300 mm with permanent set not to exceed 1.5 mm .

1.3.3 Stringers

Stringers shall be capable of supporting a 560 kg concentrated load at midspan without permanent deformation in excess of 0.25 mm .

1.3.4 Pedestals

Pedestals shall be capable of supporting a 2270 kg axial load without permanent deformation.

1.3.5 Pedestal Adhesive

Adhesive shall be capable of securing a pedestal in place with sufficient bonding strength to resist an overturning force of 113 Nm .

1.3.6 Bond Strength of Factory Installed Covering

Bond strength of floor covering shall be sufficient to permit handling of the panels by use of the panel lifting device, and to withstand moving caster loads up to 4.45 kN , without separation of the covering from the panel.

1.3.7 Grounding

The access flooring system shall be grounded for safety hazard and static suppression. Provide positive contact between components for safe, continuous electrical grounding of entire floor system. Total system resistance from wearing surface of floor to building grounding electrode shall be within range of 0.2 to 2.0 megohms.

1.3.7.1 Joint Resistance

Electrical joint resistance between individual stringer and pedestal junctions shall be less than 0.1 milliohms. Electrical resistance between stringers and floor panels as mounted in normal use shall be less than 3 ohms.

1.4 DELIVERY, STORAGE, AND HANDLING

1.4.1 Delivery

Deliver materials to site in undamaged condition, in original containers or packages, complete with accessories and instructions. Label packages with manufacturer's name and brand designations. Where materials are covered by referenced specification, containers or packages shall also bear specification number, type, and class as applicable.

1.4.2 Storage

Materials shall be stored in original protective packaging in a safe, dry, and clean location.

1.4.3 Handling

Materials shall be handled and protected in a manner to prevent damage during the entire construction period.

PART 2 PRODUCTS

2.1 FLOOR PANELS

2.1.1 Panel Construction

Base access floor system on a 600 by 600 mm square module providing minimum of 380 mm clearance between structural floor and top of finished floor. Fabricate so accurate job cutting and fitting may be done using standard sizes for perimeters and around columns. Do not expose metal on finished top surface of panels. Provide cutouts and cutout closures to accommodate utility systems and equipment intercabling. Reinforce cutouts to meet design load requirements. Provide extra support pedestals at each corner of cutout for cutout panels that do not meet specified design load requirements. Use panels of uniform dimensions within specified tolerances. Panels shall be permanently marked to indicate model number.

2.1.1.1 Metal-Clad Cementitious Fill (Composite Panels)

Composite panels shall be of die-formed steel construction totally enclosing the panel, including the top surface. The void spaces between the top sheet and the formed steel bottom sheet shall be completely filled with an incombustible cementitious or concrete material. Seal cut edges in accordance with manufacturer's recommendations. Gravity held panels with bolted stringer understructure: Fasten end of each stringer and mid-point of each 1212 mm stringer positively to pedestal heads, using manufacturer's standard screws. Provide screws that are removable from top.

2.1.1.2 Metal-Clad Wood Core

Wood core panels shall have cores of wood particleboard or of plywood. The core shall be not less than 25 mm thick, and shall be faced on both sides with structurally bonded zinc-coated steel sheets not lighter than 0.70 mm . All edges and corners shall be sealed with zinc-coated steel or extruded aluminum. The completed panels shall have a flame spread rating of 25 or less when tested in accordance with ASTM E 84. Provide zinc-coated steel, extruded aluminum, fire resistant vinyl, or other fire resistant edging to protect shop and field edge cuts and cutouts through the face of panels in

a manner to meet specified flame spread requirements.

2.1.2 Floor Covering

Floor panels shall be surfaced with materials firmly bonded in place with waterproof adhesive. The electrical resistance shall remain stable over the life expectancy of the floor covering. Any antistatic agent used in the manufacturing process shall be an integral part of the material, and shall not be surface applied. Bolt heads or similar attachments shall not rise above the traffic surface.

2.1.2.1 Vinyl Composition Tile

Vinyl composition tile surfacing shall be 3 mm thick conforming to ASTM F 1066, Type IV, Composition 1 or 2. Tiles may be approximately 300 mm square or may be the full size of the panel.

2.1.3 Accessories

Registers, grilles, perforated panels, and plenum dividers shall be provided where indicated, and shall be the manufacturer's standard type. Registers, grilles, and perforated panels shall be designed to support the same static loads as floor panels without structural failure, and shall be capable of delivering the air volumes indicated. Registers and perforated panels shall be 25 percent open area and shall be equipped with adjustable dampers.

2.1.4 Lifting Device

Each individual room shall be provided with one floor panel lifting device standard with the floor manufacturer. A minimum of two devices shall be furnished.

2.2 PANEL SUPPORT SYSTEM

Design support system to allow for 360 degree clearance in laying out cable and cutouts for service to machines and so that panel and stringer together take up maximum of 50 mm .

2.2.1 Pedestals

Pedestals shall be of steel or aluminum or a combination thereof. Ferrous materials shall have a factory-applied corrosion-resistant finish. Pedestal shafts shall be threaded to permit height adjustment within a range of approximately 50 mm , to permit overall floor adjustment within plus or minus 2.5 mm of the required elevation, and to permit leveling of the finished floor surface within 1.56 mm in 3000 mm in all directions. Locking devices shall be provided to positively lock the final pedestal vertical adjustments in place. Pedestal caps shall interlock with stringers to preclude tilting or rocking of the panels.

2.2.2 Stringers

Stringers shall be of steel or extruded aluminum, and shall interlock with the pedestal heads to prevent lateral movement. Provide stringers that can be added or removed after floor is in place.

2.3 COLOR

Color shall be as selected by Contracting Officer.

PART 3 EXECUTION

3.1 INSTALLATION

The floor system shall be installed in accordance with the manufacturer's instructions and with the approved detail drawings. Open ends of the floor, where the floor system does not abut wall or other construction, shall have positive anchorage and rigid support.

3.1.1 Preparation for Installation

The area in which the floor system is to be installed shall be cleared of all debris. Structural floor surfaces shall be thoroughly cleaned and all dust shall be removed. Floor coatings required for dust, water, or vapor control shall be installed prior to installation of pedestals only if the pedestal adhesive will not damage the coating. If the coating/ waterproofing and adhesive are not compatible, the coating/waterproofing shall be applied after the pedestals have been installed and the adhesive has cured.

3.1.2 Pedestals

Pedestals shall be accurately spaced, and shall be set plumb and in true alignment. Base plates shall be in full and firm contact with the structural floor, and shall be secured to the structural floor.

3.1.3 Stringers

Stringers shall be interlocked with the pedestal caps to preclude lateral movement, and shall be spaced uniformly in parallel lines at the indicated elevation.

3.1.4 Auxiliary Framing

Auxiliary framing or pedestals shall be provided around columns and other permanent construction, at sides of ramps, at open ends of the floor, and beneath panels that are substantially cut to accommodate utility systems. Special framing for additional lateral support shall be as shown on the approved detail drawings. Provide additional pedestals and stringers designed to specific heights and lengths to meet structural irregularities and design loads. Connect auxiliary framing to main framing.

3.1.5 Panels

The panels shall be interlocked with supports in a manner that will preclude lateral movement. Perimeter panels, cutout panels, and panels adjoining columns must be fastened to the supporting components to form a rigid boundary for the interior panels. Floors shall be level within the specified tolerances. Cut edges of steel and wood-core panels shall be painted as recommended by the panel manufacturer. Cut edges of composite panels shall be coated with a silicone rubber sealant or with an adhesive recommended by the panel manufacturer. Extruded vinyl edging shall be secured in place at all cut edges of all panel cut-outs to prevent abrasion of cables. Where the space below the floor is a plenum, cutouts for conduit and similar penetrations shall be closed using self-extinguishing

sponge rubber.

3.1.6 Repair of Zinc Coating

Zinc coating that has been damaged, and cut edges of zinc-coated components and accessories, shall be repaired by the application of a galvanizing repair paint. Areas to be repaired shall be thoroughly cleaned prior to application of the paint.

3.2 FIELD TESTS

3.2.1 Electrical Resistance

Testing of electrical resistance in the completed installation shall be conducted in the presence of the Contracting Officer. Testing shall be in accordance with NFPA 99 modified by placing one electrode on the center of the panel surface and connecting the other electrode to the metal flooring support. Measurements shall be made at five or more locations. Each measurement shall be the average of five readings of 15 seconds duration at each location. During the tests, relative humidity shall be 45 to 55 percent and temperature shall be 21 to 24 degrees C . The panels used in the testing will be selected at random and will include two panels most distant from the ground connection. Electrical resistance shall be measured with instruments that are accurate within 2 percent and that have been calibrated within 60 days prior to the performance of the resistance tests. The metal-to-metal resistance from panel to supporting pedestal shall not exceed 10 ohms. The resistance between the wearing surface of the floor covering and the ground connection, as measured on the completed installation, shall be in accordance with paragraph FLOOR COVERING.

3.3 CLEANING AND PROTECTION

3.3.1 Cleaning

The space below the completed floor shall be free of all debris. Before any traffic or other work on the completed raised floor is started, the completed floor shall be cleaned in accordance with the floor covering manufacturer's instructions.

3.3.2 Protection

Traffic areas of raised floor systems shall be protected with a covering of building paper, fiberboard, or other suitable material to prevent damage to the surface. Cutouts shall be covered with material of sufficient strength to support the loads to be encountered. Plywood or similar material shall be placed on the floor to serve as runways for installation of heavy equipment not in excess of design load capacity. Protection shall be maintained until the raised floor system is accepted.

-- End of Section --

SECTION 10800

TOILET ACCESSORIES

PART 1 GENERAL

1.1 SUBMITTALS

Government approval is required for submittals with a "G" designation; submittals not having a "G" designation are for information only. When used, a designation following the "G" designation identifies the office that will review the submittal for the Government. Submit the following in accordance with Section 01330 SUBMITTAL PROCEDURES:

SD-03 Product Data

Finishes; G AED
Accessory Items; G AED

Manufacturer's descriptive data and catalog cuts indicating materials of construction, fasteners proposed for use for each type of wall construction, mounting instructions, operation instructions, and cleaning instructions.

SD-04 Samples

Finishes; G AED
Accessory Items; G AED

One sample of each accessory proposed for use. Incorporate approved samples into the finished work, provided they are identified and their locations noted.

SD-07 Certificates

Accessory Items

Certificate for each type of accessory specified, attesting that the items meet the specified requirements.

1.2 DELIVERY, STORAGE, AND HANDLING

Toilet accessories shall be wrapped for shipment and storage, delivered to the jobsite in manufacturer's original packaging, and stored in a clean, dry area protected from construction damage and vandalism.

1.3 WARRANTY

Manufacturer's standard performance guarantees or warranties that extend beyond a 1 year period shall be provided.

PART 2 PRODUCTS

2.1 MANUFACTURED UNITS

Toilet accessories shall be provided where indicated on the Drawings. Each

accessory item shall be complete and shall be of sturdy construction with corrosion resistant surface.

2.1.1 Anchors and Fasteners

Anchors and fasteners shall be capable of developing a restraining force commensurate with the strength of the accessory to be mounted and shall be suited for use with the supporting construction. Exposed fasteners shall be finished to match the accessory.

2.1.2 Finishes

Except where noted otherwise, finishes on metal shall be satin finish.

2.2 ACCESSORY ITEMS

Accessory items shall conform to the requirements specified below.

2.2.1 Stainless Steel Toilet Tissue Dispenser (SSTTD)

Toilet tissue holder shall be stainless steel, surface mounted with one or two rolls of standard tissue mounted horizontally. Cabinet shall be stainless steel, satin finish.

2.2.2 Coat Hook

Coat Hook shall have a pin integral or permanently fastened to wall flange. Maximum projection shall be 100 mm. Finish shall be satin finish.

PART 3 EXECUTION

3.1 INSTALLATION

Surfaces of fastening devices exposed after installation shall have the same finish as the attached accessory. Install accessories at the location and height indicated. Protect exposed surfaces of accessories with strippable plastic or by other means until the installation is accepted. After acceptance of accessories, remove and dispose of strippable plastic protection. Coordinate accessory manufacturer's mounting details with other trades as their work progresses. After installation, thoroughly clean exposed surfaces and restore damaged work to its original condition or replace with new work.

3.1.1 Recessed Accessories

Fasten accessories to backing construction. Set anchors in mortar in masonry construction.

3.1.2 Surface Mounted Accessories

Mount on concealed backplates, unless specified otherwise. Accessories without backplates shall have concealed fasteners. Unless indicated or specified otherwise, install accessories with sheet metal screws or wood screws in lead-lined braided jute, teflon or neoprene sleeves, or lead expansion shields, or with toggle bolts or other approved fasteners as required by the construction. Install backplates in the same manner, or provide with lugs or anchors set in mortar, as required by the construction.

3.2 CLEANING

Material shall be cleaned in accordance with manufacturer's recommendations. Alkaline or abrasive agents shall not be used. Precautions shall be taken to avoid scratching or marring of surfaces.

-- End of Section --

SECTION 11025

FORCED ENTRY RESISTANT COMPONENTS

PART 1 GENERAL

1.1 REFERENCES

The publications listed below form a part of this specification to the extent referenced. The publications are referred to within the text by the basic designation only.

ALUMINUM ASSOCIATION (AA)

AA DAF-45	(2003) Designation System for Aluminum Finishes

AMERICAN WELDING SOCIETY (AWS)

AWS D1.1/D1.1M	(2006) Structural Welding Code - Steel

ASTM INTERNATIONAL (ASTM)

ASTM A 123/A 123M	(2002) Zinc (Hot-Dip Galvanized) Coatings on Iron and Steel Products
ASTM A 653/A 653M	(2004a) Steel Sheet, Zinc-Coated (Galvanized) or Zinc-Iron Alloy-Coated (Galvannealed) by the Hot-Dip Process
ASTM C 1036	(2001) Flat Glass
ASTM D 4802	(2002) Poly(Methyl Methacrylate) Acrylic Plastic Sheet
ASTM D 542	(2000) Index of Refraction of Transparent Organic Plastics
ASTM D 5420	(2004) Impact Resistance of Flat, Rigid Plastic Specimen by Means of a Strike Impacted by a Falling Weight (Gardner Impact)
ASTM E 1300	(2004e1) Determining Load Resistance of Glass in Buildings

BUILDERS HARDWARE MANUFACTURERS ASSOCIATION (BHMA)

BHMA A115.1	(1990) Preparation of 1-3/8" and 1-3/4" Standard Steel Doors and Steel Frames for Series 1000 Mortise Locks and Latches
BHMA A156.1	(2000) Butts and Hinges
BHMA A156.13	(2002) Mortise Locks & Latches, Series 1000

BHMA A156.16	(2002) Auxiliary Hardware
BHMA A156.18	(2000) Materials and Finishes
BHMA A156.4	(2000) Door Controls - Closers

GLASS ASSOCIATION OF NORTH AMERICA (GANA)

GANA Glazing Manual	(2004) Glazing Manual

NATIONAL ASSOCIATION OF ARCHITECTURAL METAL MANUFACTURERS (NAAMM)

NAAMM HMMA 801	(2005) Glossary of Terms for Hollow Metal Doors and Frames
NAAMM HMMA 802	(1992) Manufacturing of Hollow Metal Doors and Frames
NAAMM HMMA 810	(1987) Hollow Metal Doors
NAAMM HMMA 820	(1987) Hollow Metal Frames

UNDERWRITERS LABORATORIES (UL)

UL 10B	(1997; Rev thru Oct 2001) Fire Tests of Door Assemblies

1.2 COMPONENT DESCRIPTION

Components covered in this specification are designed to resist forced entry attacks with increasing severity levels of hand, power, and thermal tools and weapons and explosives. The components include forced entry resistant personnel door/frame assembliesglazing for doors. Each type of forced entry resistant component shall be a complete assembly produced by a single manufacturer. Movable and operable components shall operate smoothly and freely. Items for exterior installation shall be designed to resist water and vapor penetration or entrapment.

1.3 SUBMITTALS

Government approval is required for submittals with a "G" designation; submittals not having a "G" designation are for information only. When used, a designation following the "G" designation identifies the office that will review the submittal for the Government. The following shall be submitted in accordance with Section 01330 SUBMITTAL PROCEDURES:

SD-02 Shop Drawings

Installation

Drawings showing anchorage of components and appurtenances into the actual surrounding construction and clearances for operation. Drawings sufficient to show hardware location and installation details. Complete drawings for forced entry resistant prefabricated guardhouses.

SD-03 Product Data

Forced Entry Resistant Components

Manufacturer's descriptive data and finish samples. The forced entry resistant door lock functions, for selection by the Contracting Officer. Airflow calculations for louvers.

Installation

A copy of installation instructions and recommended cleaning and maintenance instructions.

Components

Lists including schedule of components to be incorporated in the work with manufacturer's model or catalog numbers, specification and drawing reference numbers, warranty information, threat level designated, fire ratings, sound transmission coefficient ratings, insulation "U" value, and number of items provided. Listing of similar products that have been satisfactorily in use for two years or more, including name of purchasers, locations of installations, dates of installations, and service organizations.

SD-07 Certificates

Forced Entry Resistant Components

Manufacturer's certificates attesting that components conform to the requirements on drawings and in specifications. Testing reports from independent testing laboratories indicating conformance to regulatory requirements shall be included. Fire rated doors may be furnished with certificate in lieu of a label. Certificate shall indicate compliance with the requirements for doors of the type and fire rating class. Manufacturer shall certify that compliance with the installation instructions and/or drawings will provide the specified degree of forced entry resistance.

1.4 STANDARD PRODUCTS

Each type of forced entry resistant component shall be the standard product of a manufacturer regularly engaged in the manufacture of such products and shall duplicate items that have been tested and approved in accordance with the forced entry test standard specified in paragraph COMPONENT TEST REQUIREMENTS. Manufacturer's descriptive data, installation instructions, and certificate and test report showing compliance with the specified forced entry test standard as specified in paragraph COMPONENT TEST REQUIREMENTS shall be submitted for all components. Following approval of manufacturer's descriptive data, a schedule listing the items and components to be furnished shall be submitted. Manufacturer's certificate shall be submitted indicating that compliance with the installation instructions [and drawings] will provide the specified degree of forced entry resistance.

1.5 QUALIFICATIONS

Welding procedures, welders, and welding operators shall be qualified in accordance with AWS D1.1/D1.1M.

1.6 DELIVERY, STORAGE, AND HANDLING

Components shall be delivered to the job site with the manufacturer, name, and model number clearly marked thereon. Components shall be delivered, stored, and handled so as not to be damaged or deformed and shall be in accordance with ASTM D 3951. Components shall be handled carefully to prevent damage to the faces, edges, corners, ends, and glazing where applicable. Abraded, scarred, or rusty areas shall be cleaned, repaired, or replaced immediately upon detection of the damage. Damaged components that cannot be restored shall be replaced. Components and equipment shall be stored in a dry location on platforms or pallets that are ventilated adequately, free of dust, water, and other contaminants, and stored in a manner which permits easy access for inspection and handling.

1.7 SEQUENCING AND SCHEDULING

When testing of a previously untested component is specified, sufficient lead time shall be allowed so that testing will not delay construction. The test results and component shall be approved by the Contracting Officer before delivery of the component to the job site.

1.8 WARRANTY

Manufacturer's warranty for _10____ years shall be furnished for glazing materials. Warranty shall provide for replacement and installation of glazing if delamination, discoloration, or cracking or crazing occurs.

PART 2 PRODUCTS

2.1 FORCED ENTRY RESISTANT PERSONNEL DOOR AND FRAME ASSEMBLIES

Doors and frames shall be factory fabricated assemblies. Sizes shall be as indicated. Doors shall be of steel, hardened steel, or be reinforced internally with steel shapes and clad with aluminum. Interior composition and reinforcement shall be determined by the manufacturer. Rubber silencers shall be installed on door frames. Exterior doors shall have top edges closed flush and sealed against water penetration, be insulated, and shall be provided with weatherstripping and thresholds. Locks and hinges shall be the same or equal in performance and number as the hardware used on the tested door. Lock and hardware shall be provided by the manufacturer as a complete assembly. Frames shall be furnished by the door fabricator, with anchorage to wall construction completely specified as to number of anchors, anchor size, material, and length.

2.1.1 Fire Rated Doors

Fire rated doors shall be provided at locations indicated. Door assemblies shall comply with the forced entry test standard specified and shall bear the listing identification label of the Underwriters' Laboratories, Inc. or a nationally recognized testing laboratory that is qualified to perform tests of fire door assemblies in accordance with UL 10B, and that has a listing service for the tested assemblies. Door assemblies include door, hardware, frame, closers, and glazing. A certificate indicating that the units were inspected in accordance with NFPA 80 and NFPA 80Amay be furnished in lieu of label. For oversized doors, a certificate from Underwriters' Laboratories, Inc. or a nationally recognized testing laboratory may be furnished in lieu of label. The certificate shall state that oversized doors are manufactured in compliance with the requirements

for doors of the type and fire rating class. Manufacturer's descriptive data shall be submitted.

2.1.2 [Enter Appropriate Subpart Title Here]

2.1.3 Door and Frame Fabrication

The subsurfaces shall be flat, parallel, and plumb after fabrication. Doors shall be reinforced and fully insulated in accordance with manufacturer's design. Door frames shall be anchored as specified by the door manufacturer. The Contractor shall coordinate the door manufacturer's requirements for welding to wall reinforcement or casting frame embedments into wall before wall is placed. Steel door frames shall be mitered or coped and welded at the corners with welds ground smooth. Where structural channel frames are used the size, weight, stops, welding, and anchorage into surrounding construction must be specified and tested along with the door as an assembly. Any necessary reinforcements in the door and the frame shall be made in the factory. Door and frame shall be drilled and tapped as required for the specified hardware. Frame channels shall be mitered or coped and welded at corners with full penetration groove welds. Exposed welds shall be dressed smooth. Hollow metal doors and frames shall be manufactured in accordance with NAAMM HMMA 801, NAAMM HMMA 802, NAAMM HMMA 810, and NAAMM HMMA 820 as a standard of quality, and shall meet the specified forced entry testing standard.

2.1.4 Sidelight Frames and Door Glazing

Sidelight frames shall be constructed using forced entry resistant door frame sections. For glazing in door or sidelight, stop height and rabbet depth shall be as required to accommodate the glazing material that is resistant to the forced entry test standard specified. The assembly shall be tested with the specified glazing and stops installed. Exterior glazing stops shall be welded or integral to the frame. Interior protected side glazing stops shall be removable stops attached with high-strength alloy steel machine screws with tamper-resistant heads or as required by the manufacturer. Glazing is specified in paragraph Forced Entry Resistant Glazing Materials.

2.1.5 Preparation for Hardware

Doors and frames shall be prepared for hardware in accordance with manufacturer's instructions. Surface applied hardware shall be drilled and tapped in the field.

2.1.6 Hardware

Hardware for forced entry resistant door assemblies shall be provided by the door assembly manufacturer to ensure a complete forced entry resistant assembly. Where test standard requires hardware to be tested with the door assembly, locks and hinges shall be included in the labeling and/or test certification. Locks and hinges shall be the same or equal in performance, quality, grade, and quantity as used on the successfully tested door assembly in accordance with the specified forced entry testing standard. The Contractor shall provide certification that the locks, latches, and hinges provide the same degree of forced entry resistance as required by the specified forced entry testing standard. Keying shall be as specified in Section 08710 DOOR HARDWARE.

2.1.6.1 Locks and Latchsets

The door manufacturer shall submit available lock functions for selection of function by the Contracting Officer. Mortise lock and latchsets shall be, as a minimum, series 1000, operational Grade 1, Security Grade 1 or 1A, and shall conform to BHMA A156.13. Strikes for mortise locks and latches (including deadbolt locks), as a minimum, shall conform to BHMA A115.1 except strikes shall be rectangular without curved lip. Mortise-type locks and latches for doors 45 mm thick and over shall have adjustable bevel fronts or otherwise conform to the shape of the door. Mortise locks shall have armored fronts. Mortise locks and latches shall have full escutcheon, through-bolted, extruded stainless steel trim. Lock finish shall be 630 in accordance with BHMA A156.18.

2.1.6.2 Hinges

Steel doors and frames required to resist the "very low" or "low" threat severity level that are up to and including 2.13 m high shall, as a minimum, be equipped with three Grade 1 hinges in accordance with BHMA A156.1, minimum size 125 mm high, heavy, double, or triple weight as required for weight of door. For each additional 300 mm of door height beyond 2.13 m, provide a minimum of one more hinge. Hinges shall be full mortise, half mortise, full surface, or half surface design as recommended by the manufacturer for frame and door design and shall be tamperproof unless mounted on the protected side of the door. Hinges shall have security pins . Spot welding of hinge pin will not be acceptable. The Contractor shall provide hinge manufacturer's certification that the hinge supplied meets applicable test requirements for BHMA A156.1 type number of hinge specified and that the hinge is suitable for the size and weight of the door assembly on which it will be utilized. Continuous extra heavy-duty piano-type hinge sized to carry the weight of the door without sagging is permitted. If continuous piano-type hinges are provided with the door, independent laboratory reports covering both the door weight capacity and a 2,500,000 cycle testing to match the BHMA A156.1 Grade 1 requirements shall be furnished by the Contractor. Interior door hinges shall be furnished in prime coated steel. Exterior door hinges shall be furnished in nonferrous metal or stainless steel.

2.1.6.3 Door Closers

Closers shall be extra heavy duty of size and type recommended by the manufacturer and shall be Grade 1 conforming to BHMA A156.4. Door closer finish shall be 600] in accordance with BHMA A156.18.

2.1.6.4 Door Stops and Holders

Door stops and holdersshall be extra heavy duty, conforming to BHMA A156.16, Type L11251 for floor mounted installation or BHMA A156.16, Type L11271 for wall mounted installation.

2.1.7 Frame Anchors

Jamb and head anchors shall be provided with door/frame assembly and shall be as specified by the manufacturer and forced entry resistant to the same degree as the component. Contractor shall coordinate concrete work with component manufacturers when the manufacturer specifies frame anchors to be embedded into a concrete or concrete masonry unit surface during construction.

2.1.8 Weatherstripping

Head and jambs of exterior doors shall be provided with compression-type neoprene bulb or closed-cell neoprene adjustable type weatherstripping. Door stops shall be weatherstripped with a surface-mounted sponge neoprene strip in bronze housing not less than 1.78 mm thick installed to make contact with the door. Weatherstripping shall be installed in conformance with the manufacturer's directions after completion of finish painting.

2.1.9 [Enter Appropriate Subpart Title Here]

2.2 [Enter Appropriate Subpart Title Here]

2.3 FORCED ENTRY RESISTANT WINDOW ASSEMBLIES

Forced entry resistant window assemblies shall be constructed using forced entry resistant frame sections. Frames shall be welded units of sizes and shapes indicated with minimum frame face dimensions of 50 mm. Frame anchorage shall be as specified by the manufacturer and forced entry resistant to the same degree as the component. Top height and rabbet depth shall be as required to accommodate the glazing material resistant to the forced entry test standard specified. Exterior glazing stops shall be welded to or integral to the frame. Interior protected side glazing stops shall be removable stops attached with high-strength alloy steel machine screws with tamper-resistant heads, or as required by the manufacturer.

2.3.1 Deal Trays

Deal tray shall provide nominal 325 mm wide by 40 mm high opening in sill of window frame. Deal tray shall be of the same materials and finish, shall be a welded subassembly of the window assembly, and shall conform to specified forced entry requirements for the entire window assembly.

2.3.2 Forced Entry Resistant Glazing Material

Glazing material shall be plastic, orcomposite and shall conform to applicable requirements ASTM C 1036, ASTM E 1300, and ASTM C 1048. Glazing materials shall be tested in accordance with the applicable sections of the following test procedures: ASTM D 905, ASTM D 1003, ASTM F 428, ASTM F 548, ASTM D 4093, and ASTM F 520. Plastic glazing shall be acrylic plastic sheets, polycarbonate plastic sheets, or approved equal. Plastic glazing shall be smooth and clear on both sides. Glazing material shall be factory installed. Factory-glazed components shall be covered to protect them from damage during adjacent finish work.

2.3.2.1 Laminated Glass

Laminated glass shall be all glass laminated construction conforming to applicable sections of ASTM C 1172. The adhesive interlayer material for bonding glass to glass shall be chemically compatible with surfaces which are to be bonded. Materials selected for lamination purposes shall be tested in accordance with the following testing procedures: ASTM D 905, ASTM D 1044, ASTM F 735, ASTM D 4093, ASTM F 521, ASTM F 520, and ASTM D 1003. Glass plies used in the lamination shall be annealed float glass conforming to Type I, quality q3, Class 1, ASTM C 1036.

2.3.2.2 Acrylic Plastic Sheets

Acrylic plastic glazing sheets shall be for use "as cast" and in stretching

operations with improved moisture absorption resistance conforming to ASTM D 4802. Acrylic materials shall be tested in accordance with the applicable sections of the following testing procedures: ASTM D 256, ASTM D 5420, ASTM D 542, ASTM D 570, ASTM D 635, ASTM D 648, ASTM D 638, ASTM D 696, ASTM D 792, ASTM D 1003, ASTM E 831, ASTM F 791, and ASTM G 155.

2.3.2.3 Polycarbonate Plastic Sheets

Polycarbonate plastic sheet shall be laminated or solid, ultraviolet stabilized flame resistant sheets shall conform to ASTM D 3595. Polycarbonate materials shall be tested in accordance with the applicable sections of the following testing procedures: ASTM D 256, ASTM D 5420, ASTM D 648, ASTM D 792, ASTM F 735, ASTM D 1003, ASTM D 635, ASTM D 638, ASTM D 1044, ASTM D 882, ASTM D 1922, ASTM D 570, ASTM F 520, ASTM E 168, ASTM E 169, ASTM G 155, and ASTM F 791. Polyvinyl butyral shall not be used in contact with polycarbonate because its placticizer may craze polycarbonate.

2.3.2.4 Glass/Plastic Laminate Glazing

Glass/plastic laminated glazing materials shall be glass/plastic laminated construction or glass-clad plastic "sandwich" construction conforming to applicable sections of ASTM C 1172.

2.3.2.5 Glass/Plastic Air-Gap Glazing

Forced entry resistant glass/plastic air-gap glazing shall consist of an assembly in which glass forms the exterior and interior protected side layer, separated by an air space from the laminated plastic plies. Glass plies shall be annealed float glass conforming to Type I, quality q3, Class 1. Plastic plies shall consist of laminated ultraviolet stabilized polycarbonate sheets, conforming to paragraph Polycarbonate Plastic Sheets and/or acrylic sheets for use "as cast" and in stretching operations with improved moisture absorption resistance conforming to paragraph Acrylic Plastic Sheets.

2.3.3 Adhesive Interlayer Materials

Adhesive interlayer material for bonding laminates glass-plastic, or plastic-plastic bondsshall be chemically compatible with the surfaces bonded. Interlayer materials may be polyvinyl butyral, cast-in-place urethane, proprietary materials, sheet from urethane and other materials. Polyvinyl butyral shall not be used to bond polycarbonate. Adhesives shall conform to ASTM D 905 and the manufacturer's recommendations.

2.3.4 Sealants

Sealants for glazings shall be chemically compatible with the glazing materials they are in contact with and shall have no deleterious effects to the glazing materials or to the adhesives used in glazing laminates. Sealants shall conform to the glazing manufacturer's recommendations and the requirements of GANA Glazing Manual.

2.4 [Enter Appropriate Subpart Title Here]

2.5 [Enter Appropriate Subpart Title Here]

2.6 ACCESSORIES

Accessories shall be provided for the installation of components into the surrounding structure. Anchorage shall be forced entry resistant to the same degree as the component. Installation shall be in accordance with the manufacturer's recommended instructions. Materials, parts, bolts, anchors, supports, braces, fasteners, and connections necessary for completion of the work.

2.7 LABELING

Forced entry resistant components shall be plainly and permanently labeled as to the applicable forced entry test standard and level within the test standard under which the component was tested and approved. Label shall be visible only from the protected side after component installation and shall include the following information: (1) manufacturer's name or identifying symbol; (2) model number, control number, or equivalent; (3) date of manufacture with the week, month or quarter, and year (this may be abbreviated or be in a traceable code such as the lot number); (4) correct mounting position (by removable label); and (5) forced entry resistant rating by indicating the test standard, level within the test standard (if any), and minutes of attack time withstood (if variable in the standard).

PART 3 EXECUTION

3.1 FABRICATION

Components shall be constructed, assembled, welded, and equipped with all hardware and accessories required to complete the assembly in the shop of a competent fabricator.

3.2 FASTENERS

Fasteners exposed to view shall match in color and finish and shall harmonize with the material to which fasteners are applied. Holes for bolts and screws shall be drilled or neatly punched. Poor matching of holes shall be cause for rejection of the work. Fasteners shall be concealed where practicable. Unless otherwise specified, fasteners shall conform to Section 05500 METAL: MISCELLANEOUS AND FABRICATIONS.

3.3 SHOP/FACTORY FINISHING

Unless otherwise specified, all factory or manufactured components shall be shop finished as indicated below.

3.3.1 Ferrous Metal

Surfaces of ferrous metal, except galvanized and stainless steel surfaces, shall be cleaned and factory primed for painting. Finish painting shall be in accordance with Section 09900 PAINTS AND COATINGS. Prior to shop painting, surfaces shall be cleaned with solvents to remove grease and oil and with power wire-brushing or sandblasting to remove loose rust, loose mill scale, and other foreign substances. Surfaces of items to be embedded in concrete shall not be shop painted.

3.3.2 Galvanizing

Items specified to be galvanized shall be hot-dip processed after fabrication. Galvanizing shall be in accordance with ASTM A 123/A 123M or ASTM A 653/A 653M.

3.3.3 Aluminum

Unless otherwise specified, aluminum items shall be standard mill finish. When anodic coatings are specified, coatings shall conform to AA STFA-601711, with treatment to a coating thickness not less than that specified for protective and decorative type finish in AA DAF-45. Items to be anodized shall receive a polished satin finish pretreatment and a clear lacquer overcoat conforming to the above-referenced standard.

3.4 CORROSION PROTECTION - DISSIMILAR MATERIALS

Contact surfaces between dissimilar metals and aluminum surfaces in contact with concrete, masonry, pressure-treated wood, or absorptive materials subject to wetting shall be given a protective coating in accordance with Section 09900 PAINTS AND COATINGS.

3.5 PREPARATION AND PROTECTION

The Contractor shall field verify dimensions of rough openings for components and shall verify that surfaces of openings are level, plumb, and provide required clearances. Components shall be examined for racking, twisting, and other malformation and corrected prior to installation. Damaged components that cannot be corrected shall be replaced. The Contractor shall protect surrounding work prior to installation of forced entry resistant components. Surrounding work which is damaged as a result of the installation of forced entry resistant components shall be repaired in an approved manner prior to acceptance. Glazed units shall be protected from damage during adjacent work.

3.6 INSTALLATION

The finished work shall be free from defects. Components shall be installed plumb and level and secured rigidly in place. Components shall be installed in accordance with approved manufacturer's recommended instructions. Operable parts of components shall be tested for smooth operation in the presence of the Contracting Officer. The Contractor shall coordinate frame embedments into the construction where required by the component manufacturer. Materials which incur damage as a result of adjacent finish work shall be replaced or repaired as specified above. Window assemblies which are not specified as factory glazed shall have glazing installed in accordance with GANA Glazing Manual and the manufacturer's recommended instructions. Field glazing shall occur only after concrete, masonry, ceiling, electrical, mechanical, plumbing and adjacent finish work has been completed. The Contractor shall be responsible for proper installation of forced entry resistant door assemblies so that operating clearances and bearing surfaces conform to the manufacturer's instructions. The bottom of door frames shall be secured to the floor slab in accordance with the manufacturer's recommendations. Weatherstripping and thresholds shall be installed at exterior door openings to provide a weathertight installation.

3.7 MANUFACTURER'S SERVICES

The manufacturer shall provide the services of a manufacturer's representative who is experienced in the installation, adjustment, and operation of the component specified. At the request of the Contracting Officer, the representative shall supervise the installation, adjustment, and operation (if operable) of the component. The representative shall be onsite 2 working days.

3.8 ADJUSTING/CLEANING

Adjustments shall be made to assure smooth operation. Units shall be weathertight when closed and locked. All Components shall be cleaned in accordance with manufacturer's instructions. Only cleanser recommended by the manufacturer shall be used to clean polycarbonate, plastic, and applied hardcoats.

-- End of Section --

SECTION 11193

DETENTION HOLLOW METAL FRAMES, DOORS, AND DOOR FRAMES

PART 1 GENERAL

1.1 REFERENCES

The publications listed below form a part of this specification to the extent referenced. The publications are referred to within the text by the basic designation only.

ASTM INTERNATIONAL (ASTM)

ASTM A 366/A 366M	(1997e1) Commercial Steel, Sheet, Carbon,(0.15 Maximum Percent Cold-Rolled

NATIONAL ASSOCIATION OF ARCHITECTURAL METAL MANUFACTURERS (NAAMM)

NAAMM HMMA 863	(2004) Guide Specifications for Detention Security Hollow Metal Doors and Frames

1.2 SUBMITTALS

Government approval is required for submittals with a "G" designation; submittals not having a "G" designation are for information only. When used, a designation following the "G" designation identifies the office that will review the submittal for the Government. The following shall be submitted in accordance with Section 01330 SUBMITTAL PROCEDURES:

SD-02 Shop Drawings

Detention hollow metal doors and frames

Submit details at not less than 1/4 full size for each frame type, and elevations of door design type at 1:50minimum, show conditions at openings, details of construction, location and installation requirements of finish hardware and reinforcements, and details of joints and connections. Indicate fabrication, erection, anchorage, and accessory items.

Submit a schedule listing the location of each door and frame using indicated reference numbers for details and openings shown.

SD-03 Product Data

Detention hollow metal doors and frames

Submit manufacturer's material and fabrication specifications.

SD-06 Test Reports

Door fabrication

Prior to fabrication, submit test report for reinforced flush door of the type to be provided on this project.

1.3 DELIVERY, STORAGE, AND HANDLING

Deliver hollow metal work with packaging to provide protection during transit and job storage as recommended by the manufacturer. Door frames shall be provided with steel spreader angles, temporarily attached to the bottom of both jambs, one on each side of the opening to serve as a brace during shipping and handling. Inspect hollow metal work upon delivery for damage. Store hollow metal units on raised platforms in vertical positions with blocking between units to allow air circulation. Keep stored material covered and protected from damage and rust. Do not cover with plastic or unvented canvas.

1.4 HARDWARE COORDINATION CONFERENCE

Conduct a conference for hardware and hollow metal work prior to submittals for the purpose of coordinating the interface of materials that are furnished by the participants listed. Require that a representative of the entity responsible for each of the following functions attend the conference. Notify the following participants a minimum of 5 working days before the conference:

a. Contractor

b. Hollow metal supplier and installer

c. Detention hollow metal supplier and installer

d. Hardware supplier

e. Hardware installer

f. Detention hardware supplier

g. Detention hardware installer

PART 2 PRODUCTS

2.1 MATERIALS

2.1.1 Hot-Rolled Carbon Steel

ASTM A 569/A 569M, commercial quality, 14 gage and thicker.

2.1.2 Cold-Rolled Carbon Steel

ASTM A 366/A 366M, commercial quality, stretcher level sheets, 12 gage.

2.1.3 Galvanized Steel

ASTM A 653/A 653M, CQ, mill phosphatized tested by ASTM G 60.

2.2 DETENTION HOLLOW METAL DOORS AND FRAMES

2.2.1 Door Fabrication

a. Provide doors fabricated of cold rolled, pickled and oiled

stretcher leveled steel sheets with clean smooth surfaces. Gages shall be as indicated for each type of door. Form molded members straight with joints coped or mitered, and in true alignment. Welded joints on exposed surfaces shall be dressed smooth, to be invisible. Doors shall be custom made full flush design, internally reinforced, sound deadened and insulated, 50 mm thick to receive detention locks, of the elevations, types and sizes shown on the approved shop drawings and schedules.

b. Face sheets shall be mild steel fully welded on edges with continuous inner-reinforcements full height and width. Provide internally 10 gage steel channel banding around complete door perimeter, spot welded to face sheet 75 mm on center. Inner reinforcements shall be truss design with triangular form, or interlocking channels with "Z" bar stiffeners, the shape of which cannot be altered without changing the length of the sides. Flat apexes shall be resistance spot welded on 70 mm centers horizontally and 75 mmcenters vertically. Insulate each flute of reinforcement with 96 kg/cubic meter density rock wool.

c. Bevel vertical door edges 3 mm in 50 mm and internally reinforced full length with 3 mm thick steel channels spot welded not over 75 mm on center inside both door faces. Close top and bottom door edges with continuous recessed 10 gage channels extending the full width of the door and welded 75 mm on center maximum to both faces and continuously welded to the vertical door edge channels to form a single perimeter frame inside the door. Top and bottom edges of doors shall be finished flush, except for provisions for weatherproofing. Mortise, reinforce, drill and tap door edges to receive templated specified hardware in accordance with the approved hardware schedule and the hardware manufacturer's recommendations for the proper installation of hardware and detention equipment.

d. Clearances shall be coordinated with frame and in accordance with NAAMM HMMA 863, Part 2, Section 2.02.

e. Doors shall be free from warpage, wind or buckle. Bends shall be of minimum radius for the gage of metal used.

f. The removable glass stop shall consist of 10 gage angle securely fastened to the frame using machine screws (6 mm #20UNRC: 25 mm at 150 mm on center and no more than 100 mm from corners). Exposed screw heads shall be button head type, and shall be torx fitting tamperproof. The finished glass stop shall be tight fitting and mitered at the corner joints. There shall be a minimum 25 mm glass engagement.

2.2.2 Door and View Window Frame Fabrication

a. Custom-made, fully assembled, factory-welded units of the size and shapes shown on the approved shop drawings. "Knock-down" frames will not be accepted. Coordinate frame dimension to thickness of door or glass.

b. Strong, rigid, neat in appearance, and free from defects. Frame members shall be clean cut, straight, and of uniform profile.

c. Form frames to provide mitered trim and butted stops. Join head

and jamb members by continuous welds occupying the full depth and width of the frame. Grind exposed welds smooth and flush.

d. When frames are for door light or food pass, fabricate members as closed tubular shapes having no visible seams or joints on exposed surfaces. Grind exposed welds smooth and flush.

e. Frames over 1200 mm wide installed in masonry partitions shall have a channel stiffener not less than 13 gage welded into the head at the factory.

f. Protect cutouts and reinforcements with pressed steel mortar guards on the inside of the frame.

g. Floor anchors formed of not less than 12 gage steel shall be securely welded to the bottom of each jamb.

h. Frames for installation in masonry walls shall be provided with non-removable adjustable jamb anchors constructed of not less than 14 gage material. Provide jamb anchors at 400 mm on center.

i. Welded frames that are to be installed in previously prepared masonry openings shall be 12 mm smaller in width and 6 mm smaller in height than the masonry opening to provide 6 mm clearance on all sides.

j. Removable glass stop for view window frame shall consist of 10 gage angle securely fastened to the frame using machine screws of 6 by 32 mm spaced at 200 mm on center maximum. Exposed screw heads shall be round, pan, or oval type, and shall be torx drive, tamperproof. The finished glass stop shall be tight fitting and mitered at the corner joints. There shall be a minimum of 25 mm glass engagement. Install plaster guards covering the glass stop screws on masonry grouted frames.

k. When shipping limitations dictate, frames for large openings shall be fabricated in sections designed for field welded splicing. Welds shall be ground smooth and primed for painting. Sections shall be assembled at the factory to ensure proper fit and be clearly marked for field reassembly.

2.2.3 Door Reinforcement for Hardware

a. Mortise, reinforce, drill, and tap doors at the factory for mortised hardware in accordance with the approved hardware schedule and templates. Doors to receive surface-mounted hardware shall have inner reinforcing plates for drilling and tapping to be performed in the field.

b. For each mortised hinge, provide a reinforcing plate measuring 5 by 38 by 250 mm that is continuously welded inside the edge channel. The top hinge preparation shall be additionally braced by a channel, welded to the back of the hinge reinforcing plate and inside the edge reinforcing channel.

c. Where detention locks are scheduled, provide reinforced pocket to receive locks. The secure side of the door shall be finished flush with a 5 mm backup plate to protect lock. Form the pocket perimeter of 12 gage channels on three sides with the door edge

channel completing the perimeter frame. Do not cut the door edge channel except for passage of the lock bolt. Provide a 5 mm thick steel mounting and protection plate to cover the lock pocket and extend at least 20 mm on three sides beyond the cutout. Secure the lock to the protection plate in accordance with the lock manufacturer's instructions. Secure the cover plate to the door by at least six 6 mm security-type machine screws. Make provisions so that removal of the lock is impossible when the lock bolt is extended.

d. Reinforcements for door pulls shall be 5 mm steel welded inside door. Reinforcement size shall be 38 by 250 mm for loop type pull and 150 by 175 mm for flush type pull. Minimum 12 gage reinforcing shall be welded inside the door for all other surface hardware items.

2.2.4 Frame Reinforcement for Hardware

a. Mortise, reinforce, drill, and tap frames at the factory for templated mortised hardware, in accordance with the approved hardware schedules and templates. Where surface-mounted hardware is to be applied, frames shall have reinforcing plates completely drilled and tapped for installation in the field.

b. For each mortised hinge, provide a 7 gage, off-set reinforcing plate that is factory drilled and tapped and measures 38 by 250 mm. Top hinge reinforcement shall be additionally braced by a 7 gage backup angle welded to the reinforcement and to the inside of the frame trim.

c. Where electrical frame-mounted locks are used, provide a special housing with a 7 gage backup for attachment of the lock and a lock cover plate of the same thickness. Provide a junction box or enclosure behind each item of electrical hardware on the frame. Conduit shall be factory installed between interconnecting electrical items within each frame.

d. All other mortised and surface-mounted hardware reinforcements shall be not less than 12 gage.

2.2.5 Factory Finishing

a. After fabrication, dress, fill, and sand tool marks and surface imperfections to make faces and vertical edges smooth, level, and free of irregularities.

b. Surfaces shall be chemically treated and cleansed of rust, oil, and impurities and given a phosphate treatment to ensure paint adhesion.

c. Paint exposed surfaces of doors, and both inside and outside of frames with a minimum of one-mil thickness of rust inhibitive primer which shall be dried and completely cured to develop hardness before shipment.

2.3 ACCESS PANELS

Provide steel access panels of sizes and locations as indicated and where required for access to utilities, equipment, and controls.

a. Doors shall be 10 gage steel, flanged 32 mm on four sides, with welded corners.

b. Frame shall be composed of steel angles measuring 5 by 50 by 50 mm. Weld and grind joints smooth.

c. Provide detention type hinges with nonremovable pin, three per frame. Weld to door and frames.

d. Weld steel stop angles measuring 3 by 25 by 25 mm to frame on all four sides.

e. Masonry anchors shall be welded at factory, 3 by 25 by 150 mm, minimum four per panel.

f. Factory finish with prime coat of rust-inhibitive, baked-on enamel.

g. Provide locks at panels within the security perimeter . Lock case and cover shall be malleable iron and steel. Bolt shall be high strength bronze and project 20 mm from case when retracted and have a throw of not less than 16 mm. Locks shall have five tumblers, each actuated by phosphor bronze springs. Locks shall operate from one side only. Attach to panel with detention type screws. Locks shall be keyed alike. Enter coded keys into keying system as specified in Section 11194 DETENTION HARDWARE.

2.4 OPENING PROVISION

Louvers shall be manufactured as indicated.

2.5 SOURCE QUALITY CONTROL

Prior to fabrication, perform the following minimum performance test on a 12 gage reinforced flush door of the type to be provided on this project:

a. Test "A" - Static Load: Under centrally applied load of 62 kN (32 kPa) at quarter points, the maximum permitted deflection shall be 15 mm with a rebound of 0.4 mm after release of load.

b. Test "B" - Rack Test: Under a concentrated load of 33 kN on one unsupported corner of door, the maximum deflection shall not exceed 90 mm without failure.

PART 3 EXECUTION

3.1 INSTALLATION

3.1.1 Door Schedule

Refer to door schedule on drawings for location of doors, door frames, and door hardware.

3.1.2 Frames

Set frames accurately in position, plumbed, aligned, and braced securely until permanent anchors are set. After completing wall construction, remove temporary braces and spreaders. Do not use any part of the frame as lintels or load-carrying members. Anchor frame to masonry with flat head

security type machine screws into expansion shields or attached to a pre-set rough buck anchored to the masonry in the same way. Install five anchors on each jamb for doors up to and including 2250 mm in height and six on each jamb for taller doors.

3.1.3 Doors

Fit hollow metal doors accurately in frames. Provide metal shims where necessary.

3.1.4 Access Panels

Prepare openings as required to receive frame. Use fasteners as specified and required by type of surrounding construction. Ensure that frames are properly seated into opening with steel shims and that doors are true, in alignment, and completely flush in appearance. Maintain 3 mm maximum clearance between door and frame.

3.2 ADJUSTMENT AND CLEANING

Remove and replace defective work which is warped, bowed, or otherwise damaged. Adjust hollow metal work for smooth operation. Touch up scratches and bare edges in the field with a rust inhibiting primer prior to painting.

-- End of Section --

SECTION 11194

DETENTION HARDWARE

PART 1 GENERAL

1.1 REFERENCES

The publications listed below form a part of this specification to the extent referenced. The publications are referred to within the text by the basic designation only.

BUILDERS HARDWARE MANUFACTURERS ASSOCIATION (BHMA)

BHMA A156.1	(2000) Butts and Hinges
BHMA A156.16	(2002) Auxiliary Hardware
BHMA A156.18	(2000) Materials and Finishes
BHMA A156.4	(2000) Door Controls - Closers
BHMA A156.5	(2001) Auxiliary Locks & Associated Products
BHMA A156.6	(2001) Architectural Door Trim
BHMA A156.7	(2003) Template Hinge Dimensions

UNDERWRITERS LABORATORIES (UL)

UL 437	(2000; Rev thru Mar 2004) Key Locks

1.2 SUBMITTALS

Government approval is required for submittals with a "G" designation; submittals not having a "G" designation are for information only. When used, a designation following the "G" designation identifies the office that will review the submittal for the Government. The following shall be submitted in accordance with Section 01330 SUBMITTAL PROCEDURES:

SD-01 Preconstruction Submittals

Detention hardware schedule

SD-02 Shop Drawings

Type 1 lock

Detention hinges

Submit complete system wiring diagrams for locks and controls, following approval of the detention hardware schedule. Indicate electrical requirements for locks and controls.

SD-03 Product Data

Keys and cylinders

Detention hinges

Detention locks

Door trim

Security door accessories

Submit details of construction and methods of installation, finishes, sizes, shape, alloy and thickness of materials. Include wiring details and electrical specifications.

1.3 QUALITY ASSURANCE

1.3.1 Qualifications of Installer

The work shall be installed by a detention equipment installer approved by the detention hardware manufacturer.

1.3.2 Regulatory Requirements

c. Detention hardware for doors that are considered "Means of Egress" shall meet applicable requirements of NFPA 101.

1.3.3 Schedule Requirements

Submit detention hardware schedule at the same time hardware samples are submitted. Schedule shall include quantities, manufacturer's catalog numbers, descriptive information, location, sizes, finish, key control symbols including keying systems for each piece. Use the same door marks as shown on the schedule in the contract documents.

1.4 DELIVERY, STORAGE, AND HANDLING

1.4.1 Keys

Send to the Contracting Officer directly from the manufacturer via registered mail.

1.4.2 Detention Hardware

Deliver in a timely manner and store in accordance with the manufacturer's recommendations. Deliver in manufacturer's original container and protect from damage by weather.

1.5 HARDWARE COORDINATION CONFERENCE

Conduct a hardware coordination conference for hardware and hollow metal

work prior to submittals for the purpose of coordinating the interface of materials that are furnished by the participants listed. Require that a representative of the entity responsible for each of the following functions attend the conference. Notify participants a minimum of 5 working days before the conference.

a. Contractor

b. Hollow metal supplier and installer

c. Detention hollow metal supplier and installer

d. Hardware supplier

e. Hardware installer

f. Detention hardware supplier

g. Detention hardware installer

h. Locking control system supplier and installer

j. Contracting Officer

1.6 MAINTENANCE TOOLS

Furnish six tool holders and bits for each different size and type of screw and fastener.

1.7 TEMPLATES

Furnish templates for door and frame preparation.

PART 2 PRODUCTS

2.1 FINISH

Finish surfaces, painted surfaces and painted items shall be in accordance with BHMA A156.18 and as follows:

2.1.1 Painted Surfaces

600.

2.1.2 Finish Surfaces

626 or 630.

2.1.3 Painted Items

689.

2.2 KEYS AND CYLINDERS

BHMA A156.5.

2.2.1 Mogul Keys

Keys for pin tumbler locks shall be not less than 73 mm in length, blade shall be 14 mm wide by 3.2 mm thick. Handle shall be 25 mm in diameter. Stamp each key with number or letter per code.

2.2.2 Mogul Cylinder

Provide a special "Mogul" cylinder approximately twice the diameter of a commercial mortise lock cylinder with internal parts proportionately larger. Special "Mogul" keys and restricted keying are required. The sale of cut keys and blanks shall be factory regulated to control usage and reproduction. The design shall be wear and pick resistant and shall include a minimum of five stainless steel 4 mm diameter pin tumblers, stainless steel springs, and stainless steel ball bearings which intermesh with the key and pin tumblers. Cylinder shall conform to UL 437.

2.2.3 Builders Cylinder

Type E09211A. Keys shall be for restricted use. Cylinder shall conform to UL 437.

2.3 KEYING SYSTEM

Keying system shall consist of dissimilar combinations with external doors keyed alike; internal corridor doors keyed alike; utility spaces; each group of cells keyed alike but different from other groups. Establish two separate detention key systems; one system shall be for the security Mogul type hardware, and one for the paracentric key system.

2.4 DETENTION HINGES

Provide hinges in accordance with BHMA A156.1 and BHMA A156.7. Type A8191 HT with stainless steel maximum security pin. Type A8192 HT with stainless steel maximum security pin. The 225 mm denotes 4 wire continuous conduction. Screws shall be twist-off or spanner head. Sizing shall be in accordance with standard. Hinges shall be drilled and counter-sunk for proper size machine screws. Use zinc coated hinges on exterior doors with a prime coat.

2.5 DETENTION LOCKS

2.5.1 Type 1 Lock

Electro-mechanical solenoid operation lock; jamb mounted for use with security hollow metal doors with the following features:

b. Cylinder operated one or two sides using mogul or builders cylinders.

c. Lock case 10 gage minimum galvanized cold-rolled steel.

d. Latch Bolt 20 mm throw stainless steel.

e. Bronze or stainless steel face plate.

g. Strike and mounting screws.

h. Push button in frame if on a cell door.

2.5.2 Type 2 Lock

Mechanical deadlock; lever tumbler deadlock for use with security hollow metal doors with the following features:

a. Paracentric key operated one or two sides.

b. Six lever tumblers with spring temper brass/bronze springs.

c. Steel or stainless steel deadbolt with saw resistant insets.

d. Bolt 20 by 50 mm with 20 mm throw.

e. Lock case primed for paint or galvanized.

f. Lock mount plate including escutcheon, mounting screws, and strike.

2.5.3 Type 7 Lock

Mechanical spring lock for use on chase and access doors with the following features.

a. Mogul key operated one side only.

b. Five lever tumblers with spring temper brass/bronze springs.

c. Malleable iron case and cover.

d. Bolt retracted by key 25 by 12.7 mm with 11 mm throw.

e. Lock case and cover primed for paint.

f. Mounting screws and strike.

2.6 DOOR CLOSERS

2.6.1 Type 1 Door Closers

Surface mounted door closer shall conform to test requirements of BHMA A156.4, PT 1, Grade 1.

b. C02021: Parallel Arm Type

2.6.2 Type 2 Door Closer

Conceale

2.7 STRIKES

Mortised strikes shall be compatible with the lock which it serves. Provide dust box and switch to monitor lock bolt where indicated in set numbers.

2.8 DOOR TRIM

2.8.1 Loop Type Pulls

stainless steel 200 mm center-to-center surface mounted with spanner type screws. Pulls shall be in accordance with BHMA A156.6 J401.

2.8.2 Flush Type Pulls

stainless steel set for one side or back to back mounting with spanner type screws. Pulls shall be in accordance with BHMA A156.6 J403.

2.8.3 Door Stops and Holders

2.8.3.1 Type PH1

2.8.3.2 Type PH2

2.8.3.3 Type OH3

2.8.3.4 [Enter Appropriate Subpart Title Here]

2.8.3.5 Type FS3

2.9 DEADBOLTS

Surface mounted and 25 mm diameter with 20 mm throw. Bolt shall be operated by spanner key case, be malleable iron, or steel with cover. Attachment shall be with spanner head screws.

2.10 DOOR POSITION SWITCHES

2.10.1 Type 1 Door Position Switch

Mechanically mortised door position switch with the following features:

a. Components concealed when door is in closed position.

d. Actuator arm track mortises into the top rail of the door.

e. Allows door opening 180 degrees.

2.10.2 Type 2 Door Position Switch

2.11 SECURITY DOOR ACCESSORIES

2.11.1 Wall Bumpers

In accordance with BHMA A156.16 Type L02101.

2.11.2 Thresholds

Aluminum extrusion minimum thickness 4.4 by 125 mm wide by 12 mm .

2.11.3 Drip Strip

Extruded galvanized steel strip 64 mm wide with 16 mm back strip. Attach to shower doors with a continuous weld.

2.11.4 Weatherstrip

Apply for head and jambs, pressure sensitive adhesive silicone rubber seal.

2.12 SCREWS AND FASTENERS

Comply with detention manufacturer's standard fastening hardware and recommendations for size, type, and material.

2.12.1 Fabrication

Finish exposed fasteners to match hardware fastened. Fabricate fasteners of the same metal as hardware fastened, except use plated brass or stainless steel for fastening aluminum.

2.12.2 Location

Provide spanner head screws and fasteners for exposed hardware.

2.13 TEMPLATE HARDWARE

Hardware to be applied to frames and to doors shall be made to template.

PART 3 EXECUTION

3.1 EXAMINATION

Examine doors, frames, and hardware for damage, defects, and suitability for intended use. Inspect components and adjacent areas of construction for conditions that could be detrimental to the proper operation or performance of the detention hardware.

3.2 INSTALLATION

Sequence and procedures for installation shall be in accordance with detention hardware manufacturer's instructions.

3.3 ADJUSTMENT AND CLEANING

Examine hardware for complete and proper installation. Lubricate bearing surfaces of moving parts. Adjust hinges, locks, and keepers to function properly. Test keys for smooth operation and for conformance to approved keying system. Hardware shall operate freely without binding and be properly aligned. Protect hardware from paint, stains, weather, and other damage until acceptance of the work.

3.4 FIELD QUALITY CONTROL

After hardware has been installed and placed in operating order, conduct performance tests which shall demonstrate to the Contracting Officer that

the hardware operates as specified. Remove items that fail to conform to the requirements specified and replace with new.

3.5 TRAINING

Upon completion of the work and at a time designated by the Contracting Officer, a manufacturer's technical service representative or manufacturer's authorized representative for the locking control system, shall instruct Government personnel in the proper operation, troubleshooting, maintenance, safety, and emergency procedures of the system. The period of instruction shall be four 8-hour sessions. Conduct training at the job site. The Government shall have the option to video tape training sessions. Notify the Contracting Officer at least two weeks in advance.

3.6 HARDWARE SETS

Abbreviations Used in Hardware Sets

PC	-	Prime Coat
EC	-	Solenoid operated continuous duty
MC	-	Motor operated continuous duty
L	-	Limit switch tripped by spring bolt
LL	-	Limit switch tripped by spring bolt and roller bolt
H	-	Holdback feature
S	-	Square bolt
K	-	Knob feature
SHS	-	Scanner Head Screws
AL	-	Aluminum

SH-1

(3) Type A8191HT hinges x Prime Coat x Spanner Head Screws
(1) Type 1 lock x keyed 1 side x EMCLL x SHS
(1) Loop type door pulls
(1) Flush type pull x SHS
(1) Wall Bumper x SHS

SH-2

(3) Type A8191HT hinges x PC x SHS
(1) Type 1 lock x keyed 2 sides x EHMLL x SHS
(2) Loop type door pulls
(1) Type 1 door position switch x SHS
(1) Type 1 door closer x AL x SHS
(1) Wall bumpers x SHS

SECTION 11311

PARALLEL PLATE , GRAVITY OIL-WATER SEPARATOR FOR POWER PLANT

PART 1 GENERAL

1.1 REFERENCES

The publications listed below form a part of this specification to the extent referenced. The publications are referred to in the text by the basic designation only.

AMERICAN ASSOCIATION OF STATE HIGHWAY AND TRANSPORTATION OFFICIALS (AASHTO)

AASHTO HB-17	Highway Bridges-Division I-Section 14: Bearings

ASME INTERNATIONAL (ASME)

ASME B16.5	(1996) Pipe Flanges and Flanged Fittings

ASTM INTERNATIONAL (ASTM)

ASTM A 36/A 36M	(2000a) Carbon Structural Steel
ASTM E 165	(1996) Liquid Penetrant Examination

AMERICAN WELDING SOCIETY (AWS)

AWS D1.1/D1.1M	(1998) Structural Welding Code - Steel

FEDERAL STANDARDS (FED-STD)

FS SS-S-210	(Rev. A Reinst) Sealing Compound, Preformed Plastic, for Expansion Joints and Pipe Joints

MILITARY SPECIFICATIONS (MS)

MIL-P-24441	(Rev. B; Supp. 1) Paint, Epoxy-Polyamide
MIL-S-45180	(Rev. D) Sealing Compound, Gasket, Hydrocarbon Fluid and Water Resistant

THE SOCIETY FOR PROTECTIVE COATINGS (SSPC)

SSPC SP 10	(1994; R 1995) Near-White Blast Cleaning

STEEL TANK INSTITUTE (STI)

STI P3	(1999) Specification and Manual for External Corrosion Protection of Underground Steel Storage Tanks

1.2 SYSTEM DESCRIPTION

1.2.1 Applications

The separator shall remove free oil and emulsified oil and suspended solids from oil-in-water mixtures of oily waste originating from engine/generator room. The influent oil-in-water mixture will flow by gravity to the unit which will not be located in an area with a corrosive atmosphere.

1.2.2 Influent Characteristics

Provide oil-water separator designed for a maximum flow of 3.5 liters per second. Operating temperatures of the influent oil-in-water mixture will range from 10 to 30 degrees C and ambient air temperatures will range from -12 to 35 degrees C. The specific gravity of the oil at operating oil-water temperatures will range from 0.79 to 0.95. The specific gravity of the freshwater at operating temperatures will be 1.0.

1.2.3 Performance Requirements

The grease and oil concentration in the effluent from the oil-water separator shall not exceed the following limitations:

Contaminants	Maximum
Total grease and oil, 30-day average	10.0 mg/L

To achieve this goal, it will be necessary to remove all free oil droplets equal to or greater than 20 microns.

1.3 MATERIAL AUTHENTICATION DATA INCLUDED IN DESIGN ANALYSIS

The following is submitted in accordance with Section 01335 SUBMITTAL PROCEDURES FOR DESIGN/BUILD PROJECT. It is included in the Design Analysis for this project.

SD-02 Shop Drawings

Separator

Accessory equipment

Submit shop drawings for separator and accessory equipment including principal dimensions, location of fittings and unit foundation. Include data to verify center of gravity with the unit empty and filled with water.

SD-05 Design Data

Separator

Accessory equipment

Submit analysis, signed by a registered professional engineer, which indicates that at the calculated overflow rate, the separator will be provided with the required square meter of projected plate separation area to achieve the specified performance under laminar flow (i.e. Reynolds number of less than 500) conditions. Calculations shall take into account the rate of

flow, potential surge flow, influent concentrations, particle characteristics, fluid temperature, fluid specific gravities, and pH.

1.4 SUBMITTALS

The following shall be submitted in accordance with Section 01335 SUBMITTAL PROCEDURES for design built project:

SD-06 Test Reports

Shop hydrostatic test

Submit results of hydrostatic and dynamic testing.

Inspection

Field hydrostatic test

Preoperational test

In-service test

SD-07 Certificates

Separator corrosion protection

Submit written verification on the fabricator's letterhead that surface preparation and coating application were performed in accordance with the manufacturer's printed recommendations for the coating system.

SD-08 Manufacturer's Instructions

Separator system

SD-10 Operation and Maintenance Data

Separator system

Accessory equipment

1.5 DOCUMENTATION FOR PROPOSED VARIANT PRODUCTS

For products not explicitly named in the specification that meet product requirement criteria named herein, product data as listed in article titled MATERIAL AUTHENTICATION DATA INCLUDED IN DESIGN ANALYSIS shall be submitted for review. Product information will be provided to establish that proposed product meets the requirements of this specification and has the indicated qualities related to type, function, dimension, in-service performance, physical properties, appearance, or other relevant characteristics that equal or exceed those of specified product. Product is consistent with the Contract Documents and will produce the indicated results, and is compatible with other portions of the Work.

1.6 DELIVERY, STORAGE, AND HANDLING

1.6.1 Delivery and Storage

Inspect materials delivered to site for damage; unload and store with minimum handling. Store materials on-site in enclosures or under protective coverings. Protect materials not suitable for outdoor storage to prevent damage during periods of inclement weather, such as subfreezing temperatures, precipitation, and high winds. Store materials susceptible to deterioration by direct sunlight under cover and avoid damage due to high temperatures. Do not store materials directly on ground. If special precautions are required, prominently and legibly stencil instructions for such precautions on outside of equipment or its crating.

1.6.2 Handling

Handle separator in such a manner as to ensure delivery to final location in sound, undamaged condition. Take special care not to damage interior and exterior surfaces of separator, coalescing plates, and associated supports and pipe coatings or linings. Make satisfactory repairs to damaged materials at no cost to Government. Carry and do not drag materials.

PART 2 PRODUCTS

Oil separator for the Maintenance Garage shall be as specified in section 15400.

2.1 MANUFACTURERS

Basis of Design: Highland Tank, Model HTC-G-H-EZ 550.

Acceptable Manufacturers:

1. Basis of Design manufacturer.
2. Equivalent product complying with requirements of this specification for proposed variant products.

2.2 MATERIALS

Use 4.6 mm (inner) and 3.4 mm (outer)minimum thick carbon steel conforming to ASTM A 36/A 36M or material having equivalent structural properties and corrosion resistance for separator, hoppers, stationary and adjustable weirs, nozzles, flow distributor and energy dissipator device, bolts, seals, stiffeners, washers, separator cover and nuts. Weld in accordance with AWS D1.1/D1.1M to provide watertight separator that will not warp or deform under load. Use welders qualified in accordance with AWS Standard Qualification Procedure. Grind welds smooth and remove weld spatter. Fabricate free of kinks and sharp bends in a manner not to reduce the strength of steel to a value less than that intended by the design. Size and shape of bends shall be uniform. Clean and finish carbon steel surfaces as described in paragraph entitled "Separator Corrosion Protection."

2.2.1 Separator Corrosion Protection

2.2.1.1 Steel Separator

After shop conducted hydrostatic tests have been successfully completed,

provide a MIL-P-24441 coating system to the interior and exterior surfaces of the separator. Exterior coating shall meet STI P3. Prior to shop painting, abrasive blast clean the surfaces in accordance with SSPC SP 10 (internal) and SP6 (external). Apply two-component polyurethane coating to a minimum dry film thickness of 0.25 mm (internal) and 0.38 mm (external). Repair and replace areas of the coating system which are found to be damaged or defective upon delivery of equipment to the site or found to be defective due to work of the applicator.

External Coating: Chemthane 2240 or equal.

Internal Coating: Highland Tank Internal Polyurethane Tank Lining or equal.

2.2.1.2 Cathodic Protection

For below ground metal separators, provide cathodic protection with test stations shall be in accordance with STI P3.

2.2.2 External Surfaces

External surfaces and appurtenances shall be resistant to corrosion from the in situ soil, backfill material, groundwater, and surface runoff .

2.2.3 Internal Surfaces

Parallel plate material and orientation shall enhance oil coalescence and solids removal, and be corrosion and chemically resistant to the oil-in-water mixture.

2.2.4 Hardware

Bolts, stiffeners, washers, nuts, screws, pins, and fittings as required shall be corrosion resistant. Provide materials that are inherently corrosion resistant and not merely treated with a corrosion-resistant coating, such as provided by the galvanizing process.

2.2.5 Accessibility

As a minimum provide access hatches over the following areas: parallel plates, oil storage compartments, Influent sampling area, effluent sampling area, oil skimmer, and weirs. Parts subject to wear or requiring adjustment, inspection, cleaning or repair shall be accessible and capable of convenient removal when required.

2.3 SEPARATION CHAMBER

Provide below ground separator to withstand hydraulic and soil loadings under static and dynamic conditions while empty and during operating conditions. Provide adequate support for additional loadings from separator appurtenances including weirs, hoppers, internal supports, parallel plate oil coalescers, equipment transportation, and rapid lowering and braking of load during handling operations. Bolt separator and accessories to weld-fabricated, structural steel skid base, or mount on manufacturer's standard base.

2.3.1 Lifting Mechanism

Fit separator with lifting lugs, straps, padeyes, supports for handling and

installation. Each lug, strap, padeye,. support shall carry the total dry weight of the separator and attendant appurtenances. Prominently display lifting instructions on plate located on outside of separator.

2.3.2 Flanges

Use only flat face flanges and drill 1,034 kPa ANSI Standard bolt circle and remove burrs. Use flanged piping connections that conform to ASME B16.5, Slip-on type.

2.3.3 Weirs

Attach stationary weirs and adjustable weir supports to separator side walls to provide a watertight seal between adjoining compartments and trough to prevent hydraulic short-circuiting. Use carbon steel for weir plates and baffles. Provide sharp crested weirs of size and section specified by manufacture. Provide slotted holes in weir plates and baffles or supports to permit horizontal and vertical adjustment of weir or baffle. Use nondeteriorating sealant or gaskets for mounting weir plates. Fill voids between separator wall and weir plate with sealant to make watertight.

2.3.4 Identification Plates

Provide anodized aluminum identification and instruction plates and stamp necessary data. Securely affix plates, in prominent location, to separator with nonferrous screws or bolts of not less than 3 mm in diameter.

2.3.5 Instruction Plates

Instruction plates shall describe special or required procedures to operate and service equipment, and shall include warnings of hazardous procedures and notice of safety and health requirements. Plates shall be durable and legible throughout equipment life.

2.3.6 Warning Sign

On entrances to the separator (and entrances to the vault) place a permanent sign which states the following: "DO NOT ENTER separator (OR VAULT) OR PERFORM HOT WORK ON OR IN separator UNTIL THE ATMOSPHERE HAS BEEN TESTED AND CERTIFIED GAS FREE AND SAFE."

2.4 INLET COMPARTMENT

Provide inlet compartment of sufficient volume to effectively reduce influent suspended and settleable solids and dissipate energy. Use inlet compartment that provides a minimum of 4.5 minutes detention ahead of the oil coalescing compartment. Provide nonclogging flow distributor and energy dissipator device and the primary solids collection hopper as specified in paragraph entitled "Reduction of Solids". Locate adjustable, primary surface oil overflow weir and sample ports as recommended by the manufacturer.

2.5 OIL SEPARATION COMPARTMENT

2.5.1 General

The maximum surface loading rate for the oil separation compartment shall be as recommended by manufacturer. The separator will also provide a minimum detention time within the oil separation compartment of 10 minutes

at design flow. Detention time will recomputed by calculating the volume of the separation zone within the separator and dividing this volume by the design flow rate.

2.5.2 Parallel Plates

Provide parallel plates at an angle from 0.70 to 1.05 rad with respect to longitudinal axis of the plate corrugations and space not less than 19 mm apart for removal of free oil and settleable solids. Configuration used shall not promote solids buildup on plates which would increase velocities to point of discharging an effluent of unacceptable quality. Maintain laminar flow at maximum design flow rate throughout plate packs including entrance and exit so as to prevent re-entrainment of oil(s) with water. Flow through plate packs shall be in a downflow mode parallel to plate corrugations or cross-flow perpendicular to plate corrugations, so that the oil collects and coalesces at high point of corrugations and rises to top of pack without clogging from oil or settleable solids. .

2.5.3 Supports

Brace and support individual plates or plate packs to withstand loads associated with transportation and operation of units, including inplace cleaning. Equip each plate pack with lifting lugs or other attachments for handling and installation. Each lug shall carry total weight of plate pack . Provide adequate structural supports to facilitate inplace cleaning of plate pack bundles.

2.5.4 Baffles

Provide oil retention baffle, adjustable surface oil overflow weir with trough, and stationary underflow baffle. Position underflow baffle to prevent resuspension of solids that have accumulated in secondary solids hopper.

2.6 OUTLET COMPARTMENT

Provide outlet compartment of manufacturer's recommended size, an adjustable overflow effluent weir, a sampling port, and nozzles.

2.7 ACCESSORIES AND ACCESSORY EQUIPMENT

Provide bolts, stiffeners, washers, nuts, screws, pins, gaskets, and fittings as required for adjustable weirs, separator covers and parallel plate packs. Provide separator covers with a vapor proof seal for vapor control with vents and suitable access manways to each separator compartment.

2.7.1 Hold Down Straps

100% Nylon webbing with reinforced end loops. Provide with wire rope, clamps, turnbuckles, and other hardware for anchoring tank.

Manufacter: Highland Tank, Nylon Hold Down Straps or equal.

2.7.2 Manholes

9.5 mm thick diamond steel plate covers with frame, 1.9 mm thick formed steel skirts, and steel channel anchors for concrete embedment. Covers shall have minimum H-20 load rating, and protective paint coating.

All manholes at ground level shall be capable of withstanding H-20 highway loading as defined by AASHTO HB-17.

Manufacturer: Fairfield Industries, Inc., Models 300HD, 360HD, and 7248/R or equal.

2.8 FABRICATION

Provide shop fabricated unit approved by the Contracting Officer, which is comprised of a separator containing an inlet compartment, parallel plate oil coalescing compartment, outlet compartment and the following accessories:

2.8.1 Shop Hydrostatic Test

Prior to applying coatings, perform hydrostatic test at atmospheric pressure by filling separator with water in the shop for a minimum of 4 hours. Testing shall be conducted after all seams have been cleaned and all welds have been inspected in accordance with ASTM E 165. Acceptance criteria, for the hydrostatic test, is no leakage after 4 hours using a thorough visual inspection for the leaks.

2.8.2 Reduction of Solids

Inlet compartment shall reduce suspended and settleable solids to nonclogging level for parallel plates and provide a uniform oily wastewater hydraulic loading across inlet face of oil coalescing compartment, under laminar flow conditions. Equip compartment with an inlet nozzle with wastewater sampling port, nonclogging flow distributor and energy dissipator device, primary solids collection hopper, primary solids outlet nozzle, oil retention weir, adjustable surface oil overflow weir with trough, primary oil outlet nozzles. The oil-water separator shall be preceded by a solid water basin which includes a removable solids or trash basket. Equip the solid water basin with a hoist for servicing the trash basket. Size the basket to retain all solids larger than 75 mm in any dimensions. The solid waste basin shall have a minimum storage volume of 945 liters (245 gallons).

2.8.3 Oil Coalescing Compartment

Equip oil coalescing compartment with easily removable and reinstallable, parallel, corrugated plates arranged to optimize separation of free oil from liquid carrier. Use parallel plates that are easily removable without dismantling packs and without confined space entry. Provide adjustable surface oil overflow weir with trough, oil outlet nozzle and stationary underflow baffle, oil retention baffle positioned to prevent discharge of free oil that has been separated from the carrier liquid in inlet and oil coalescing compartments. Provide access to each plate pack from top. Each bundle shall be equipped with handles or lifting rings. Plate designs that permit cleaning of plate packs in place are not acceptable.

2.8.4 Wastewater Sampling Port

Equip inlet and outlet compartments, adjustable overflow effluent weir, effluent trough, and wastewater outlet nozzle with wastewater sampling ports permitting easy access for obtaining isokinetic influent and effluent samples.

2.8.5 Connections

Connect the separator at the inlet and outlet pipe invert elevations indicated. Follow equipment manufacturer's recommendation for setting and adjusting top of weir elevations throughout unit.

2.8.6 Storage

Provide oil and suspended solids collection, storage, and transfer systems as an integral part of proposed oil-water separator system. As a minimum, the separator oil storage compartment shall have a capacity of not less than 10 percent of the total separator volume.

PART 3 EXECUTION

3.1 INSPECTION

Inspect each component of separator for compliance with requirements specified in PART 2 PRODUCTS. Redesign or modification of equipment to comply with specified requirements, or necessary redesign or modification following failure to meet specified requirements, shall receive particular attention for adequacy and suitability. This element of inspection shall encompass visual examinations and dimensional measurements.Noncompliance with specified requirements, or presence of one or more defects preventing or lessening maximum efficiency of separator operation, shall constitute cause for rejection.

3.2 INSTALLATION

Lift separator as required without parallel plate packs in place onto level foundation using lifting mechanism provided. Level separator and bolt to supports to prevent hydrostatic uplift and ensure unit stability. Use a lifting bar through lugs to insert plate packs into separator and place on supports. Caulk around packs and pack supports with sealing compound conforming to FS SS-S-210 or to MIL-S-45180 to prevent hydraulic short-circuiting. Avoid abrupt contact between the packs and the separator walls and pack supports to avoid damage. Separator system installation shall be conducted in accordance with manufacturer's recommendations.

3.3 FIELD QUALITY CONTROL

3.3.1 Field Hydrostatic Test

After separator has been leveled and secured to foundation and parallel plate packs are in place, level effluent overflow weir at elevation specified by manufacturer and hydrostatically test unit at atmospheric or operational pressure (for no leakage) for an additional 8 hours by filling with water. Perform the hydrostatic test prior to backfilling below ground or partially below ground installations.

3.3.2 Preoperational Test

The manufacturer's service representative shall inspect, operate, and test unit before in-service testing by the Contractor.

3.3.2.1 Tests

Tests shall include but not be limited to the following:

a. Soundness (without cracked or otherwise damaged parts).

b. Completeness in all details, as specified.

c. Correctness of setting, alignment, and relative arrangement of each component.

d. Verification of proper operation for all system components.

3.3.2.2 Preoperational Investigation and Test Report

Submit preoperational test report. Document inspections, operations, adjustments, and tests performed and indicate whether they were acceptable or not. For unacceptable items, describe corrective action taken or recommended. Include detailed descriptions of points inspected, tests and adjustments made, quantitative results obtained if such are specified, and suggestions for precautions to be taken to ensure proper maintenance. Include the manufacturer's certificate that equipment conforms to specified requirements and is ready for permanent operation and that nothing in installation will render manufacturer's warranty null and void.

3.3.3 In-Service Test

After hydrostatic test and preoperational test have been successfully completed and unit has been properly connected to influent and effluent piping, allow influent oil-in-water mixture previously described in paragraph entitled "SYSTEM DESCRIPTION" to flow into separator filled with water. Adjust and level primary and secondary surface oil overflow weirs to optimize oil skimming and minimize water overflow to oil recovery. Optimize operation of unit within 5 working days.

-- End of Section --

SECTION 11400

FOOD SERVICE EQUIPMENT

PART 1 GENERAL

1.1 REFERENCES

The publications listed below form a part of this specification to the extent referenced. The publications are referred to in the text by basic designation only.

ASTM INTERNATIONAL (ASTM)

ASTM A 123/A 123M	(2001) Zinc (Hot-Dip Galvanized) Coatings on Iron and Steel Products
ASTM A 167	(1999) Stainless and Heat-Resisting Chromium-Nickel Steel Plate, Sheet, and Strip
ASTM A 240/A 240M	(2000) Heat-Resisting Chromium and Chromium-Nickel Stainless Steel Plate, Sheet, and Strip for Pressure Vessels
ASTM A 269	(2000) Seamless and Welded Austenitic Stainless Steel Tubing for General Service
ASTM D 520	(2000) Zinc Dust Pigment

AMERICAN WELDING SOCIETY (AWS)

AWS A5.8	(1992) Filler Metals for Brazing and Braze Welding

NSF INTERNATIONAL (NSF)

NSF 2	(1996) Food Equipment

SHEET METAL AND AIR CONDITIONING CONTRACTORS' NATIONAL ASSOCIATION (SMACNA)

SMACNA HVAC Duct Const Stds	(1995; Addenda Nov 1997) HVAC Duct Construction Standards - Metal and Flexible

1.2 GENERAL REQUIREMENTS

Food service equipment shall be of the sizes listed in this section and the types shown. Equipment, materials, and fixtures required for use in conjunction with the items to be furnished by the Government shall be furnished and installed by the Contractor. Equipment, materials, and fixtures indicated on the drawings and schedules shown as Contractor furnished and installed, shall be furnished and installed by the Contractor.

1.2.1 Mechanical, Electrical, and Plumbing Work

Plumbing systems, including final connections, shall be in accordance with Section 15400 PLUMBING, GENERAL PURPOSE. Duct work and accessories shall be in accordance with Section 15895 AIR SUPPLY, DISTRIBUTION, VENTILATION, AND EXHAUST SYSTEM. Painting shall be in accordance with Section 09900 PAINTS AND COATINGS. Air-conditioning systems shall be in accordance with Section 15700 UNITARY HEATING AND COOLING EQUIPMENT.

1.2.2 Sanitation Standards

Food service equipment shall meet the requirements set forth by the National Sanitation Foundation (NSF) sanitation standards.

1.2.3 Verification of Dimensions and Coordination of Project Data

The Contractor shall become familiar with all details of the work and shall advise the Contracting Officer of any discrepancy before performing any work. The Contractor shall perform the following:

a. Horizontal and vertical dimensions shall be field verified.

b. Contract drawings and submittal data shall be reviewed for accuracy and completeness.

c. The installed utility capacity and location shall be field checked.

d. Critical systems/components shall be reviewed for application and capacities such as for exhaust hoods, refrigeration systems, fire suppression systems, gas, water, and steam/condensate line sizes and manifold configurations.

e. Delivery shall be coordinated for access through finished openings and vertical handling limitation within the building.

1.2.4 Standard Products

Materials and equipment shall be the standard products of manufacturer regularly engaged in the manufacture of the products and shall essentially duplicate items that have been in satisfactory use for at least 2 years prior to bid opening. The experience used shall include applications of equipment and materials under similar circumstances and of similar size. When two or more of the same products are supplied they shall be products of one manufacturer. Equipment shall be supported by a service organization that is, in the opinion of the Contracting Officer, reasonably convenient to the site.

1.2.5 Nameplates

Each item of equipment shall bear a stainless steel, aluminum, or engraved polyester nameplate, as standard with the manufacturer, located in a conspicuous position and permanently fastened to the equipment. Name or identification plates shall be of the size standard with the manufacturer for the particular piece of equipment provided. Name plates shall reflect the name of the manufacturer/trade name, serial number, make, and model number, pertinent ratings, operating characteristics, and other information as standard with the manufacturer, date of manufacture, electrical characteristics, and other applicable data, such as flow rate, temperature, pressure, capacity, and material of construction. Separate equipment

identification plates with the contract number marked thereon, shall be securely fastened to the surface of each piece of equipment.

1.3 SUBMITTALS

Government approval is required for submittals with a "G" designation; submittals not having a "G" designation are for information only. When used, a designation following the "G" designation identifies the office that will review the submittal for the Government. Submit the following in accordance with Section 01330 SUBMITTAL PROCEDURES:

SD-03 Product Data

Table and Shelves

1.4 DELIVERY AND STORAGE

1.4.1 Delivery

Unless otherwise directed, the following procedures shall apply:

a. Field assembled fixed equipment integrated into structure shall be sent to jobsite when required.

b. Fixed equipment not integrated into structure shall be sent to the jobsite after completion of finished ceilings, lighting, and acidizing of the finished floor and wall systems, including painting.

c. Major movable equipment shall be delivered to inventory in a secured area for interim jobsite storage, or if secured area is not available, when fixed equipment installation/clean-up has been completed.

1.4.2 Storage

Items delivered and placed into storage shall be stored with protection from weather, humidity, and temperature variation, dirt and dust, or other contaminants.

1.4.3 Protection of Fixed/Fabricated Manufactured Equipment

Fiberboard or plywood shall be taped to surfaces as required by equipment shape and installation access requirements.

1.4.4 Prohibited Use of Equipment

Food service equipment shall not be used as tool and material storage, work bench, scaffold, or stacking area.

1.4.5 Damaged Equipment

Contractor shall immediately submit documentation to the Contracting Officer with a recommendation of action for repair or replacement and the impact on project schedule.

PART 2 PRODUCTS

2.1 MATERIALS

Materials shall conform to the following:

2.1.1 Stainless Steel, Nonmagnetic

ASTM A 167 or ASTM A 240/A 240M: 18-8, 300 Series, austenitic, polished to No. 3 or 4 finish on exposed surfaces.

2.1.2 Stainless Steel Pipe and Tubing

ASTM A 269. Pipe and tubing shall be seamless or welded, of the gauge specified, of true roundness, and of material as specified for stainless steel. Seamless tubing shall be thoroughly annealed, pickled, and ground smooth. Welded tubing shall be thoroughly heat-treated, quenched to eliminate carbide precipitation and then drawn true to size and roundness, and ground. Tubing shall be given a No. 3 or 4 finish when exposed to view.

2.1.3 Galvanizing Repair Compound

Pigment per ASTM D 520.

2.1.4 Brazing Material

Class shall be as applicable per AWS A5.8.

2.1.5 Steel Structural Shapes for Framing

Structural shapes shall be uniform, ductile in quality, and shall be free of hard spots, runs, checks, cracks and other surface defects. Sections shall be galvanized by the hot-dip process, conforming to ASTM A 123/A 123M.

2.1.6 Coatings

Coatings shall be of a durable, nontoxic, nondusting, nonflaking, and mildew-resistant type, suitable for use with food service equipment and in conformance with NSF 2. Application shall be in accordance with the recommendations of the manufacturer.

2.1.6.1 Exterior Parts

Exterior, galvanized parts, exposed members of framework, and wrought steel pipe, where specified to be painted, shall be cleaned, and free of foreign matter before applying a rust inhibiting prime and two coats of epoxy-based paint in accordance with Section 09900 PAINTS AND COATINGS, unless otherwise specified. Color shall be selected by the Contracting Officer from manufacturer's standard colors.

> Items where color, pattern, or fabric are be selected by Contracting Officer from manufacturer's full range shall have choices submitted to Contracting Officer simultaneously with other items requiring finish selection.

2.1.6.2 Solder Material

Manufacturer's recommended material.

2.2 WORK SURFACES

Work surfaces shall be constructed in accordance with applicable portions of NSF 2.

2.2.1 Stainless Steel

Work surfaces shall be constructed of 1.9 mm (14 gauge) stainless steel with all seams and corners welded, ground smooth, and polished. Countertops may be constructed of 1.6 mm (16 gauge) stainless steel.

2.2.2 Marble

Work surfaces shall be constructed of 40 mm thick marble.

2.2.3 Pitch and Drainage of Equipment Surfaces

Wherever a fixture has a waste or drain outlet, the surface shall have a distinct pitch toward such outlet.

2.3 COUNTER BASES

2.3.1 Legs

Legs shall be of 1.6 mm (16 gauge), stainless steel 3 cm diameter tubing or 1.2 mm (18 gauge) 4 cm square tubing.

2.3.2 Feet

Feet for stationary equipment shall be hard plastic and shall provide for height adjustment.

2.3.3 Wheels

12.5 cm diameter lockable swivel rolling casters shall be provided on 8 sets of the stainless steel open slotted/perforated shelves

2.3.4 Shelving

2.3.4.1 Shelves

Shelves shall be constructed of 1.9 mm (14 gauge) open slotted/perforated stainless steel with all edges turned down with a tight hem at bottom. Corners shall be notched and welded from underside to completely fill the gap, ground and polished. Eash set of shelves shall be 100 cm wide×50cm deep×1.8m high, 4 tier with 3 cm adjustable stainless steel legs.

2.4 SINKS

Sinks shall be constructed of stainless steel.

2.5 EXHAUST HOODS OVER COOKING EQUIPMENT

Hoods shall conform to SMACNA HVAC Duct Const Stds. Ducts and hoods shall be secured to building so as to be level and free from vibration under all conditions of operations.

2.5.1 Hood Support

Wall mounted or island type hoods shall be supported from the structure with stainless steel mounting brackets.

2.5.2 Filter Type Hoods

2.5.2.1 Grease Filters

Grease filters shall be in accordance with manufacturer's recommendations. Filters shall remove heat, odor, smoke, residue, and grease vapors from the exhaust of the applicable cooking process. Filter design shall result in optimum air velocity for the removal of residues and grease. Construction shall be aluminum.

2.6 DRAIN TRENCH LINER/GRATING

Drain trench liner/grating shall be of cast iron construction with galvanized body and chromium plated bronze, nickel-bronze, or nickel brass strainer or of 1.2 mm (18 gauge) stainless steel in sizes as indicated with a perimeter shoulder at the top, turned up flush and level with finished floor, tight-hemmed back down to the shoulder level and flanged out for attachment to the slab.

2.7 KITCHEN EQUIPMENT

All kitchen equipment listed herein shall be UL and NSF listed.

2.7.1 Dual Tray & Silverware Dispenser

Self-leveling mobile tray and silver dispenser shall hold two stacks of 150 trays. Minimum features:

14-3/8" x 18-3/4" Maximum size trays
Storage capacity of 150 trays per stack for 2 stacks (300 total)
Self-lubricating delrin wheels with locks
Self-leveling mechanism lifts out for easy cleaning
Field adjustable to accommodate different weights
Removable stainless steel carrier tray provides bottom support for trays being dispensed
Base fabricated from stainless steel and reinforced with stainless steel angles
Tubular frames fabricated from stainless steel tubing securely welded to stainless steel angles on underside of base
Frames reinforced by horizontal stainless steel rods welded to each vertical frame
Top-mounted stainless steel silverware holder includes plastic silverware cylinders
Non-marking bumper attached at each corner
Four 4" heavy-duty non-marking swivel casters

Dimensions: 22" L x 37" W (559mm L x 940mm W)

2.7.2 Dual Plate Dispenser

Minimum features:

Frames constructed of all welded 1" O.D. 16 ga. stainless steel tubing, welded to 16 ga. stainless steel shelves - turned down, hemmed and notched

to mate with the uprights
Adjustable, drop-in dish dispensers
Units mounted on four, 4'' diameter heavy duty, double ball bearing swivel casters with non-marking rubber tires

Dimensions: 30" L x 17" W (762mm L x 432mm W)

2.7.3 Iced Tea Brewer and Dispenser

Iced tea brewer shall be electric and constructed of stainless steel. Tea shall be brewed directly into a stainless steel dispenser. Brewer and dispenser shall be a matched pair produced by a single manufacturer. Minimum features:

Brewing capacity of 26.7 gal. (101 liters) /hr based upon incoming water temp of 60?F/15?C (140?F/60?C rise) per 1.9 liter (1/2 gallon) brew time of 4 minutes.
Dispenser capacity of 3 gal (11.4 liters)

Dimensions: 34" H x 11.6" W x 22.4"D (86.4cm H x 29.5cm W x 58.4cm D).

2.7.4 Coffee Brewer and Dispenser

Coffee brewer shall be urn type combined brewer and dispenser. Coffee brewer shall be electric, constructed of stainless steel with coffee and hot water serving outlets. Minimum features:

Brewing capacity of 11.4 gal. (43.2 liters) /hr based upon incoming water temp of 60?F/15?C (140?F/60?C rise)
Water tank capacity of 10 gallons (37.9 liters)
Dispenser capacity of 3 gal (11.4 liters)

Dimensions: 34" H x 11.6" W x 22.4"D (86.4cm H x 29.5cm W x 58.4cm D).

2.7.5 Cold Food Counter

Cold food counter shall provide mechanical refrigeration for a total of six (6) 12"x20" pans. Minimum features:

14-gauge stainless steel top with 1-1/2" turndown on all sides
Top secured by recessed bolts
14-gauge stainless steel legs fastened to 18-gauge stainless steel bottom shelf
20-gauge stainless steel end and front panels are attached to legs
20-gauge stainless steel fully welded 5" deep well with drain
Well is enclosed with insulation on sides, end and bottom
1" drain with ¾" FPT shut off valve
Open control side for additional storage capacity
Sliding doors
Louvered panels for ventilation of condensing unit
End louver panel removable to access compressor
5" diameter swivel plate casters, 2 with brakes
Eight foot electrical cord
On/Off switch and pilot light mounted on control panel of unit's operator side
Buffet single side protector guard with fluorescent lights

Dimensions: 88" L x 28" W x 36" H (2235mm L x 711mm x 914mm)

2.7.6 Hot Food Counter

Hot food counter shall provide electrical heating for a total of six (6) wells. Minimum features:

14-gauge stainless steel top with 1-1/2" turndown on all sides
Top secured by recessed bolts for easy access
14-gauge stainless steel legs fastened to 18-gauge stainless steel bottom shelf, open control side
Open control side for additional storage capacity
20-gauge stainless steel end and front panels are attached to legs
20-gauge stainless steel bottom-mounted wells, 6-1/2" deep with coved corners
2" insulation on sides and between wells, 1-1/2" on bottom, 1" on the ends and 1/4" fiber insulation all around
1000 watt tubular heating element for each well which is individually and thermostatically controlled
Wells can be run wet or dry
5" diameter swivel plate casters, 2 with brakes
3/4" drain with ¾" FPT shut off valve
Eight foot electrical cord
On/Off switch and pilot light mounted on control panel of unit's operator side
Buffet single side protector guard with fluorescent lights

Dimensions: 88" L x 28" W x 36" H (2235mm L x 711mm x 914mm)

2.7.7 Electric Griddle

Griddle shall be electric-heated unit, with a hermetically-sealed vacuum chamber that produces steam and heats the 8-gauge stainless steel griddle plate. Efficient steam heat transfer provides 200-400°F (93-204°C) operating temperature range and uniform griddle surface temperatures of ±3°F (±1°C). Griddle fabricated from cold-rolled stainless steel with 4.5" high back splash, sides that taper from 4.5" to 1.7", a 4" wide by 1" deep full front grease trough and 11?2-2 gallon grease drawer. 36" cooking surface height. Minimum features:

Power-On switch & indicator light
Heating indicator light
200-400°F (93-204°C) solid state thermostat
Easy front service access to controls

Dimensions: 48" W x 29" D (1219mm W x 734mm D)

2.7.8 Beverage Refrigerator

Beverage refrigerator shall have two glass, self-closing, sliding doors. Refrigeration system shall use R-134a refrigerant. Minimum features:

Refrigeration system capable of 33°F to 38°F (.5°C to 3.3°C) cooler temperatures
Exterior of laminated vinyl
Interior liner with 300 series stainless steel floor
Self closing doors with counterbalanced weight system
"Low-E", double pane thermal glass door assemblies
Entire cabinet structure foamed-in-place using high density, CFC free, polyurethane insulation
Easily accessible condenser coil for cleaning

Eight (8) adjustable, heavy duty PVC coated wire shelves 22.9"L x 20.6"D (583mm x 523mm)
Safety shielded fluorescent interior lighting
Cabinet lighting utilizes electronic ballast and T-8 bulbs for brighter illumination, longer bulb life and increased energy efficiency
Epoxy coated evaporator
Bottom mounted condensing unit

Dimensions: 51.1" W x 29.6" D x 78.6" H (1299mm W x 753mm D x 1998mm H)

2.7.9 Reach-In Single Door Refrigerator

Refrigerator shall have a single, hinged door. Refrigeration system shall use R-134a refrigerant. Minimum features:

Refrigeration system capable of 33°F to 38°F (0.5°C to 3.3°C) cooler temperatures
Exterior shall have 300 series stainless steel front with anodized aluminum exterior ends, back and top
Interior shall be NSF-7 compliant, white aluminum liner with 300 series stainless floor (with coved corners)
Entire cabinet structure foamed-in-place using high density, CFC free, polyurethane insulation
Welded, heavy duty galvanized base rail with corrosion protection and leg levelers
Door shall extend full width of cabinet shell and be constructed of 300 series stainless steel exterior with white aluminum liner to match cabinet interior
Provide lifetime guaranteed 12" (305mm) long recessed handle that is foamed in-place with a sheet metal interlock
Door shall be positive seal, self-closing type with lifetime guaranteed door hinges and torsion type closure system with locks
Door gasket shall be magnetic, of one piece construction, removable without tools for ease of cleaning.
Interior shall contain three (3) adjustable, heavy duty PVC coated wire shelves 20-13/16"L x 17"D (529mm x 432mm)
Shelf support pilasters made of same material as cabinet interior; shelves are adjustable on 1/2" (13mm) increments
Interior lighting shall be incandescent with safety shield, activated by rocker switch mounted below door
Epoxy coated evaporator
Bottom mounted condensing unit

Dimensions: 24.8" W x 23.1" D x 64" H (631mm W x 585mm D x 1626mm H)

2.7.10 Reach-In Three Door Refrigerator

Refrigerator shall have three hinged doors. Refrigeration system shall use R-134a refrigerant. Minimum features:

Refrigeration system capable of 33°F to 38°F (0.5°C to 3.3°C) cooler temperatures
Exterior shall have 300 series stainless steel front with anodized aluminum exterior ends, back and top
Interior shall be NSF-7 compliant, white aluminum liner with 300 series stainless floor (with coved corners)
Entire cabinet structure foamed-in-place using high density, CFC free, polyurethane insulation
Welded, heavy duty galvanized base rail with corrosion protection and 6"

(153mm) seismic/flanged legs
Door shall extend full width of cabinet shell and be constructed of 300 series stainless steel exterior with white aluminum liner to match cabinet interior
Provide lifetime guaranteed 12" (305mm) long recessed handle that is foamed in-place with a sheet metal interlock
Door shall be positive seal, self-closing type with lifetime guaranteed door hinges and torsion type closure system with locks
Door gasket shall be magnetic, of one piece construction, removable without tools for ease of cleaning
Interior compartments shall contain three (3) adjustable, heavy duty PVC coated wire shelves 24-1/8" L x 22-3/8" D (613mm x 569mm)
Shelf support pilasters made of same material as cabinet interior; shelves are adjustable on 1/2" (13mm) increments
Interior lighting shall be incandescent with safety shield, activated by rocker switch mounted below door
Epoxy coated evaporator
Bottom mounted condensing unit

Dimensions: 78-1/8" W x 29-1/2" D x 84-1/16" H (1985mm W x 750mm D x 2136mm H)

2.7.11 Reach-In Two Door Freezer

Freezer shall have two hinged doors. Refrigeration system shall use R-404a refrigerant. Minimum features:

Refrigeration system capable of -10°F (-23.3°C) freezer temperatures
External digital temperature monitor
Exterior shall have 300 series stainless steel front with anodized aluminum exterior ends, back and top
Interior shall be NSF-7 compliant, white aluminum liner with 300 series stainless floor (with coved corners)
Entire cabinet structure foamed-in-place using high density, CFC free, polyurethane insulation
Welded, heavy duty galvanized base rail with corrosion protection and 6" (153mm) seismic/flanged legs
Door shall extend full width of cabinet shell and be constructed of 300 series stainless steel exterior with white aluminum liner to match cabinet interior
Provide lifetime guaranteed 12" (305mm) long recessed handle that is foamed in-place with a sheet metal interlock
Door shall be positive seal, self-closing type with lifetime guaranteed door hinges and torsion type closure system with locks
Door gasket shall be magnetic, of one piece construction, removable without tools for ease of cleaning
Interior compartments shall contain three (3) adjustable, heavy duty PVC coated wire shelves 24-9/16" L x 22-3/8" D (624mm x 569mm)
Shelf support pilasters made of same material as cabinet interior; shelves are adjustable on 1/2" (13mm) increments
Interior lighting shall be incandescent with safety shield, activated by rocker switch mounted below door
Epoxy coated evaporator
Bottom mounted condensing unit

Dimensions: 54-1/8" W x 29-1/2" D x 83-5/16" H (1375mm W x 750mm D x 2117mm H)

2.7.12 Ice Machine

Ice machine shall be self-contained air-cooled unit with bin located on top of unit accessible through uplifting swing door. Unit shall be certified in accordance with ARI 820. Minimum features:

Cleanable condenser air filter
Cube size of 7/8" x 7/8" x 7/8" (19mm x 19mm x 19mm)
52 lbs (24 kgs) of ice cube production over a 24 hour period at a water temperature of 52 deg F (24 deg C) and an air temperature of 90 deg F (32 deg C)
Unit drain
Adjustable legs
Internal insulation

Dimensions: 19.7" W x 22.3" D x 36" H (500mm W x 567mm D x 914mm H)

2.7.13 Double-Basket Electric Fryer

Fryer shall be double-basket, electric type and shall have immersion type heating elements with high temperature alloy stainless steel sheath. Fryer shall have high input elements and oil filtration system. Fryer temperature control shall consist of a solid state thermostat with melt cycle. Fryer shall have a deep cool zone; minimum 20% of total oil capacity to trap burnt particles, crumbs and black specs. Minimum features:

Welded tank with an extra smooth peened finish
Stainless steel front, door, side panels, and splashback
Heavy duty 3/16" (48mm) door hinge.
Digital controller which maintains the fryer temperature between 250°F (122°C) and 380°F (193°C)
Digital controller with built-in melt cycle and boil-out capability
Temperature limit switch safely shuts off the fryer if the oil temperature exceeds the upper limit.
Drain valve interlock switch shuts disables the fryer if the drain is opened preventing accidental fires
Filter system on self aligning roller-less guides
Filter media
1-1/4" NPT drain valve for quick draining on both full and twin tanks
Filter piping integrated into the fryer
3" drain manifold
Clean out rod and cleaning brush
Adjustable legs

Dimensions: 31-1/4" W x 34-3/8" D x 48-15/32" H (1230mm W x 873mm D x 1231mm H)

2.7.14 Flat Top Electric Range

Range shall be electric, medium duty, with full size, all porcelain oven interior, contoured front stainless steel plate rail. Minimum features:

36" (914mm) wide with 36" griddle top
Griddle shall be 5/8" (16mm) thick and thermostatically controlled
1 large, full-size oven with complete porcelain interior finish
Chrome plated, 4-position, removable rack guides with one oven rack
Electro-mechanical heavy duty oven thermostat (150°F/66°C - 550°F/288°C)
Heating elements for small pot work, infinite switch controlled
Stainless steel exterior with stainless steel 10" (254 mm) high backguard

with slotted black enameled angled cap
Heat resistant, cool touch oven door handle

Dimensions: 36" W x 31-1/4" D x 40-7/8" H (914mm W x 794mm D x 1038mm H)

2.7.15 Electric Range

Range shall be electric, medium duty, with full size, all porcelain oven interior, contoured front stainless steel plate rail. Minimum features:

36" (914mm) wide with 6 all purpose sealed heating elements
1 large, full-size oven with complete porcelain interior finish
Chrome plated, 4-position, removable rack guides with one oven rack
Electro-mechanical heavy duty oven thermostat (150°F/66°C - 550°F/288°C)
Heating elements for small pot work, infinite switch controlled
Stainless steel exterior with stainless steel 10" (254 mm) high backguard
with slotted black enameled angled cap
Heat resistant, cool touch oven door handle

Dimensions: 36" W x 31-1/4" D x 40-7/8" H (914mm W x 794mm D x 1038mm H)

PART 3 EXECUTION

3.1 INSTALLATION

Equipment shall be installed at locations shown in accordance with the manufacturer's written instructions. The Contractor shall make provision for the plumbing, heating, and electrical connections and for equipment indicated as being furnished and installed by the Government.

3.2 TESTING

Equipment shall be inspected and tested under operating conditions after installation. If inspection or test shows defects, such defects shall be corrected, and inspection and test shall be repeated.

-- End of Section --

SECTION 11405

PREFABRICATED WALK-IN REFRIGERATORS AND COOLERS

PART 1 GENERAL

1.1 REFERENCES

The publications listed below form a part of this specification to the extent referenced. The publications are referred to in the text by basic designation only.

AIR CONDITIONING AND REFRIGERATION INSTITUTE (ARI)

ARI 365	(1994) Commercial and Industrial Unitary Air-Conditioning Condensing Units
ARI 420	(1995) Unit Coolers for Refrigeration

ASTM INTERNATIONAL (ASTM)

ASTM B 280	(1999) Seamless Copper Tube for Air Conditioning and Refrigeration Field Service
ASTM D 520	(2000) Zinc Dust Pigment

AMERICAN WELDING SOCIETY (AWS)

AWS A5.8	(1992) Filler Metals for Brazing and Braze Welding

NATIONAL FIRE PROTECTION ASSOCIATION (NFPA)

NFPA 70	(2005) National Electrical Code

NSF INTERNATIONAL (NSF)

NSF 7	(1999) Commercial Refrigerators and Storage Freezers

UNDERWRITERS LABORATORIES (UL)

UL 207	(1993; Rev thru Oct 1997) Refrigerant-Containing Components and Accessories, Nonelectrical
UL 303	(1987; R 1995, Bul. 1997) Refrigeration and Air-Conditioning Condensing and Compressor Units
UL 412	(1993; R 1996, Bul. 1997) Refrigeration Unit Coolers
UL 471	(1995; Rev thru Apr 1998) Commercial Refrigerators and Freezers

UL Elec Equip Dir	(1999) Electrical Appliance and Utilization Equipment Directory

1.2 GENERAL REQUIREMENTS

Food service equipment shall be of the sizes and types shown. Equipment, materials, and fixtures required for use in conjunction with the items to be furnished by the Government shall be furnished and installed by the Contractor. Equipment, materials, and fixtures indicated on the drawings and schedules shown as Contractor furnished and installed, shall be furnished and installed by the Contractor. Refrigeration systems shall be remote type. Provide security fence or wall to protect outside refrigeration units.

1.2.1 Mechanical, Electrical, and Plumbing Work

Plumbing systems, including final connections, shall be in accordance with Section 15400 PLUMBING, GENERAL PURPOSE. Electrical equipment, motors, wiring, and final connections shall be in accordance with Section 16402 INTERIOR DISTRIBUTION SYSTEM. Painting shall be in accordance with Section 09900 PAINTS AND COATINGS.

1.2.2 Verification of Dimensions and Coordination of Project Data

The Contractor shall become familiar with all details of the work and shall advise the Contracting Officer of any discrepancy before performing any work. The Contractor shall perform the following:

a. Horizontal and vertical dimensions shall be field verified.

b. Contract drawings and submittal data shall be reviewed for accuracy and completeness.

c. The installed utility capacity and location shall be field checked.

d. Critical systems/components shall be reviewed for application and capacities such as for, refrigeration systems, AND condensate line sizes .

e. Delivery shall be coordinated for access through finished openings and vertical handling limitation within the building.

1.2.3 Standard Products

Materials and equipment shall be the standard products of manufacturer regularly engaged in the manufacture of the products and shall essentially duplicate items that have been in satisfactory use for at least 2 years prior to bid opening. The experience used shall include applications of equipment and materials under similar circumstances and of similar size. When two or more of the same products are supplied they shall be products of one manufacturer. Equipment shall be supported by a service organization that is, in the opinion of the Contracting Officer, reasonably convenient to the site.

1.2.4 Underwriters Laboratories Standards

Electrically operated equipment shall be in accordance with applicable standards such as UL 412 and UL 303. Evidence of meeting the requirements

shall be a UL label on the equipment, a UL listing mark per UL Elec Equip Dir, or I.E.C. standards or a certified test report from a nationally recognized independent testing laboratory indicating that the specific food service equipment has been tested and conforms to the applicable UL standards.

1.3 SUBMITTALS

Government approval is required for submittals with a "G" designation; submittals not having a "G" designation are for information only. When used, a designation following the "G" designation identifies the office that will review the submittal for the Government. Submit the following in accordance with Section 01330 SUBMITTAL PROCEDURES:

SD-03 Product Data

Food Service Equipment

Manufacturer's descriptive and technical literature, performance charts and curves, catalog cuts, and installation instructions. Brochures shall have front and rear protective covers with labeled project name and include an index indicating item number, quantity, description, and manufacturer, a fly sheet for each component indicating item number, name, quantity, manufacturer, optional equipment, modification, special instruction, and utility requirements, and catalog specifications sheets.

Data consisting of a complete list of equipment and materials. Detail drawings showing complete wiring, piping, and schematic diagrams, and any other details required to demonstrate that the system has been coordinated and will properly function as a unit. Drawings shall show proposed layout and anchorage of equipment and appurtenances, and equipment relationship to other parts of the work, including clearances for maintenance and operation.

Detail drawings by the Contractor that show the size, type, and location of equipment drain lines, and floor drains. Drawings shall indicate drain lines from equipment, distances of drain lines and floor drain receptacles from equipment and aisles, and elevation views of drain piping and floor drains.

1.4 DELIVERY AND STORAGE

1.4.1 Delivery

Unless otherwise directed, the following procedures shall apply:

a. Field assembled fixed equipment integrated into structure shall be sent to jobsite when required.

b. Fixed equipment not integrated into structure shall be sent to the jobsite after completion of finished ceilings, lighting, and acidizing of the finished floor and wall systems, including painting.

c. Major movable equipment shall be delivered to inventory in a secured area for interim jobsite storage, or if secured area is not available, when fixed equipment installation/clean-up has been

completed.

d. Minor appliances and loose items shall be delivered to the jobsite when the Contracting Officer is prepared to receive and inventory such items.

1.4.2 Storage

Items delivered and placed into storage shall be stored with protection from weather, humidity, and temperature variation, dirt and dust, or other contaminants.

1.4.3 Protection of Fixed/Fabricated Manufactured Equipment

Fiberboard or plywood shall be taped to surfaces as required by equipment shape and installation access requirements.

1.4.4 Prohibited Use of Equipment

Food service equipment shall not be used as tool and material storage, work bench, scaffold, or stacking area.

1.4.5 Damaged Equipment

Contractor shall immediately submit documentation to the Contracting Officer with a recommendation of action for repair or replacement and the impact on project schedule.

PART 2 PRODUCTS

2.1 MATERIALS

2.1.1 Refrigeration Pipe and Tubing

Refrigeration piping shall be annealed or hard drawn seamless copper tubing in conformance with ASTM B 280.

2.1.2 Galvanizing Repair Compound

ASTM D 520, Type I pigment.

2.1.3 Brazing Material

AWS A5.8, class shall be as applicable.

2.1.4 Steel Structural Shapes for Framing

As per manufacturer's recommendations.

2.1.5 Coatings

Coatings shall be of a durable, nontoxic, nondusting, nonflaking, and mildew-resistant type, suitable for use with food service equipment. Application shall be in accordance with the recommendations of the manufacturer.

2.2 PREFABRICATED WALK-IN REFRIGERATORS AND COOLERS

Refrigerators and coolers shall be prefabricated, commercial, walk-in type

suitable for the intended use. Mercury shall not be used in thermometers. Units shall conform to UL 207, UL 471, and NSF 7 floor panel design type and size as indicated, and the following:

2.2.1 Panel Construction

Interchangeable, thickness as standard with manufacturer, filled with insulation. Provide preformed corner units. Panels to have profiles edges with extruded polyethylene gaskets to assure air and vapor tight joints. Provide panels with fasteners around perimeter edges.

a. Insulation: Foamed-in-place (non-CFC) polyurethane with "K" factor of 0.336W/m2K and density of not less than 40 kg per cu meter.

b. Finish: PVC-coated, galvanized steel sheet.

2.2.2 Miscellaneous Requirements

2.2.2.1 Closure Panels

Closure panels and/or trim strips to the building walls and ceiling shall be installed with concealed attachments. Closure/trim shall be of the same material as the wall panels unless otherwise noted.

2.2.2.2 I-Beam Supports

Wherever compartment dimension exceeds the clear-span ability of ceiling panels, I-beam supports shall be provided on the exterior of the ceiling or supported by spline-hangers. Thirteen millimeter diameter steel rods shall be installed through beam/hangers and secured to the structure above. Beams or posts within compartments will not be acceptable.

2.2.2.3 Cold Room Doors

Doors shall be filled with insulation. Hardware shall be steel. Provide door latch with key lock and with internal safety-release handle.

2.2.2.4 Self Service Units (Doors and Shelves)

Door panels shall be insulated glass doors, sizes and locations as indicated on Drawings. Cast metal supports shall be positioned behind glass doors inside of cold room to allow storage and display of goods through self service doors. Doors shall be double glazed with safety glass and an airspace. Self serve structure shall contain appropriate lighting and be pre-wired with condensers and starter. Interior grille-type shelves shall be adjustable for height and inclination, and made of galvanized steel, plastic-coated for foods; shelving supports shall be galvanized steel with a factory applied epoxy-polyester powder coated finish.

2.2.2.5 Door Stops

Door stops shall be provided, where necessary, to prevent walk-in doors from striking adjacent walls, plumbing fixtures or food service equipment when door is open.

2.2.2.6 Gasket

Gasket material shall be either natural or synthetic rubber and conform to DIN, BS, or EN standards. Where frames are used, the panels shall fit

together with gaskets that are designed for 50 percent compression.

2.2.2.7 Alarm System

An alarm system shall be provided consisting of a controller, pilot and warning lights, and audible alarm as specified by the manufacturer. The controller shall be equipped with normally-open and normally-closed contacts for remote monitoring of the temperature warning alarms and the power-off conditions.

2.2.2.8 Recording Thermometer

A 7-day, high/low temperature data recorder with battery backup power,complete with manufacturer's standard sensors/thermocouples, wiring, and other accessory components.

2.2.3 Floor

2.2.3.1 Prefabricated Floor Panels

Prefabricated floor panels shall be of the same construction as wall/ceiling except with plastified galvanized finish, 0.7 mm slip-resistant finish. Prefabricated floor panels which are recessed, shall have sloping interior floor ramps at exterior entrance doors. Two sets of erection tools, compatible with fasteners, shall be furnished with each unit.

2.2.4 Refrigeration Equipment

Refrigeration equipment shall be designed for remote installation. Design units for 16 to 18 hour operation at the indicated interior temperature in -18 degree C ambient temperature. Capacities, air delivery, and dimensions shall be as indicated. Remote condensing units shall be factory fabricated and rated in accordance with UL 303 and ARI 365. Provide motor, air-cooled condenser, receiver, and compressors, all mounted on a common base. Compressors shall be hermetic type. Evaporators shall be factory fabricated and rated in accordance with UL 412 and ARI 420. Forced convection, unit cooler type, made to suspend from the ceiling panels, with forced air discharged parallel to ceiling. Provide with air circulating motor, multifin tube type coil, and grille assembled within a protective housing. Air circulation motors shall be lifetime sealed, and the entire unit-cooler assembly shall be accessible for cleaning. Provide a drip pan and drain connection. When the cold storage room is used for freezing, provide an automatic mechanism to accomplish this.

2.3 UTILITY DISTRIBUTION SYSTEMS

Utility distribution systems shall be UL listed and conform to NFPA 70. Systems shall be prewired and preplumbed to one final connection point. Systems shall include an electrical distribution assembly and a mechanical manifold assembly as indicated. Systems shall be provided with removable 1.6 mm (16 gauge) stainless steel panels for ease of access. Systems shall be provided with floor mounting pedestals with vertical extensions for overhead service connections.

2.3.1 Electrical Distribution Assembly

The internal electrical main feeder shall be copper cable bus with the equipment ground connected to a grounding stud. Electrical assembly shall

be prewired with easily removable and resettable stainless steel connection plates housing receptacle and circuit breaker. Each receptacle shall be of standard NEMA configuration and shall be positively grounded to both the receptacle connection plate and body of the enclosure. Each connection plate shall have identification plate giving voltage, amperage, phase, item number, and description of equipment connected to the receptacle. Electrical equipment shall be ground fault protected in accordance with NFPA 70. A main service disconnect shall be provided. Coded indicator lights shall be provided to indicate the status of power to each piece of equipment. Controls shall be mounted where indicated.

2.3.2 Mechanical Manifold Assembly

Mechanical manifold assembly shall be in accordance with Section 15400 PLUMBING, GENERAL PURPOSE.

2.4 ELECTRICAL WORK

Electrical systems, components and accessories shall be certified to be in accordance with NFPA 70 and the following:

2.4.1 Installed Equipment Load

Should the electrical load of the approved equipment differ from that specified or shown on the drawings, the contractor shall provide and install electrical service compatible with the approved equipment.

2.4.2 Electrical Equipment and Components

Food service equipment furnished under this section shall have loads, voltages, and phases compatible with building system, and shall conform to manufacturer standards.

2.4.3 Light Fixtures

Provide two (2) each single tube fluorescent fixtures end to end in each refrigerator and freezer with switch. Light fixtures with lamps which are installed in/on fabricated or field-assembled equipment shall be prewired to a junction box for final connection (fixtures shall be continuous run when indicated). Cold storage light fixtures shall be electrically connected through the hub fitting located on the top of the fixture. Horizontal conduit shall be above the ceiling panels. Plastic sleeves shall be installed through ceiling panels for electrical conduit and the penetrations shall be sealed airtight at both sides of panel.

2.4.4 Final Electrical Connection Provisions

Provide final electrical connections to ensure fully functional operation of all components and in a manner so as not to void manufacturer's warranty.

2.4.5 Lamps

Food service equipment containing light fixtures shall have standard appliance type bulbs or energy efficient appliance type bulbs as indicated on the drawings. Exposed fluorescent lamps above or within a food zone shall have plastic coated T-8 energy efficient lamps or standard lamps, sleeved in plastic tube with end caps.

2.5 COLOR

Color shall be as selected by Contracting Officer from manufacturer's full range of standard colors.

Items where color, pattern, or fabric are be selected by Contracting Officer from manufacturer's full range shall have choices submitted to Contracting Officer simultaneously with other items requiring finish selection.

PART 3 EXECUTION

3.1 INSTALLATION

Equipment shall be installed at locations shown in accordance with the manufacturer's written instructions. The Contractor shall make provision for the plumbing, heating, and electrical connections and for equipment indicated as being furnished and installed by the Government.

3.1.1 Equipment Connections

Equipment connections shall be complete for all utilities. Unless otherwise specified, exposed piping shall be stainless steel.

3.1.2 Plumbing Work

Plumbing final connection points of equipment shall be tagged, indicating item number, name of devices or components, and type of utility (drain). Extensions of indirect waste fitting shall be provided to open-sight hub drain, floor sink or floor drains from food service equipment.

3.2 CONSTRUCTION OF FABRICATED EQUIPMENT

3.2.1 Grinding, Polishing, and Finishing

Exposed welded joints shall be ground smooth and finished to match the adjoining material. Wherever materials have been depressed or sunken by welding operation, such depressions shall be hammered and peened flush with the adjoining surface, and again ground to eliminate high spots. Ground surfaces shall then be polished or buffed to match adjoining surfaces. Care shall be exercised in the grinding operations to avoid excessive heating of the metal and metal discoloration. Abrasives, wheels, and belts used in grinding shall be free of iron and shall not have been used on carbon steel. In all cases, the grain of rough grinding shall be removed by several successively finer polishing operations. The texture of the final polishing operation shall be uniform, smooth, and consistent. The grain direction of horizontal stainless steel surface shall be longitudinal, including the splash back. Polishing at right angle corners shall provide a mitered appearance. Butt and contact joints shall be close fitting and not require solder as a filler. Wherever brake bends occur, the bends shall be free of open texture or orange peel appearance. Where brake work does mar the uniform appearance of the material, such marks shall be removed by grinding, polishing, and finishing. Sheared edges shall be free of burrs, projections, and fins. Where miters or bullnosed corners occur, such miters and corners shall be finished with the underage of the material and ground to a uniform condition. Overlapping of material is not acceptable. Exposed stainless steel surfaces shall have a No. 3 or 4 finish. Finishes of materials, other than stainless steel, shall be comparable in appearance to commercial mill finish. Exposed surfaces shall

include:

a. Exterior surfaces exposed to view.

b. Interior surfaces exposed to view in doorless cabinets.

c. Undersides of shelves shall have a ground finish of No. 90 grit or finer.

3.2.2 Fastening Devices

Fastening devices shall be of the same material as the metal being joined when joint pieces are of similar metal. Fastening devices shall be stainless steel when stainless steel is joined to dissimilar metal. Stud bolts shall be a minimum of M6 stainless steel with length necessary to accept washers, and required nuts, and shall be welded 225 mm on center maximum. Exposed surfaces of equipment shall be free of bolts, screws, and rivet heads. Threads of stud bolts which are on the inside of fixtures and are either visible or might come in contact with a wiping cloth, shall be capped with chrome plated washers, lock washers, and chromium-plated brass cap nuts.

3.2.3 Welding

3.2.3.1 Welding Rods

Welding shall be done with welding rods of the same composition as the sheets or parts welded.

3.2.3.2 Weld Quality

Welds shall be strong and ductile. Welds shall be free of imperfections such as pits, runs, spatter, cracks, low spots, voids, and shall be finished to have the same color as the adjoining surfaces. Butt welds made by welding straps under seams, or by filling in with solder, or by grinding will not be acceptable. Welded joints shall be homogeneous with the sheet metal. Spot welding shall not be substituted for continuous welding. Joints shall be joined by heli-arc welding or a process other than carbon-arc welding or one that will permit carbon pick-up. Joints shall be fully welded. Exposed welds shall be ground smooth, flush with adjacent surface and free of burrs and sharp edges. Wherever welds occur on nonfood contact surfaces not suitable for grinding or polishing, such welds and the accompanying discoloration shall be sandblasted and coated in the factory with a nontoxic metallic-base paint. Bolts and screws shall be welded by a process that will minimize the possibility of carbide precipitation. Welds in galvanized steel made after galvanizing, and the adjacent areas where galvanizing is damaged, shall be cleaned and coated with galvanizing repair compound.

3.2.4 Soldering

Soldering shall serve only as a filler to prevent leakage and shall be made with solder material. Stainless steel requiring soldering shall first be cleaned of discoloration and then have a soldering flux applied. Excess or remaining flux and catalytic material shall be removed after the soldering has been completed, and the entire soldered joint and adjacent metallic surfaces shall be cleaned with a liquid alkaline or neutralizing agent to prevent any attack on the surrounding metallic surfaces by the soldering flux.

3.2.5 Brazing

Brazing shall be accomplished with brazing material. Brazing shall be used only on copper tubing to brass and bronze connection fittings.

3.3 TESTING

Equipment shall be inspected and tested under operating conditions after installation. If inspection or test shows defects, such defects shall be corrected, and inspection and test shall be repeated. Refrigerator tests shall include the following:

3.3.1 Performance Tests

A detail written test procedure shall be submitted prior to performance of tests. The Contractor shall furnish all instruments, test equipment, and personnel required for the tests; Government will furnish the necessary water and electricity for the installed equipment. Evidence shall be submitted that the instruments have been properly calibrated by an independent laboratory at the Contractor's expense.

3.3.2 Operating Tests

An operating test shall be performed on all items after complete installation and adjustment. The failed test item shall be corrected and the test shall be rerun.

3.3.3 Clean and Adjust

Debris resulting from this work, as the installation progresses, shall be removed from the jobsite. All food service equipment, prior to demonstration, shall be cleaned and polished, both interior/exterior. Thermostatic controls, and temperature sensors shall be adjusted, as required, for proper operation. Damage to painted finishes shall be touched up.

3.3.4 Equipment Start-Up/Demonstration

The Contractor shall obtain the services of the manufacturer's representative experienced in the installation, adjustment and operation of the equipment specified. The representative shall supervise the start-up, adjustment, and testing of the equipment, prior to the demonstration. Equipment shall be carefully tested, adjusted, and regulated in accordance with the manufacturer's instructions and shall be so certified in writing. A thorough operational demonstration shall be provided of all equipment and instructions furnished for general and specific care and maintenance. Selected items of equipment and attendees shall be scheduled, with the Contracting Officer, at least 2 weeks in advance of demonstration periods.

-- End of Section --

SECTION 12600

FURNITURE, FURNISHINGS AND EQUIPMENT (FFE)

PART 1 GENERAL

1.1 SUBMITTALS

Government approval is required for submittals with a "G" designation; submittals not having a "G" designation are for information only. When used, a designation following the "G" designation identifies the office that will review the submittal for the Government. Submit the following in accordance with Section 01330 SUBMITTAL PROCEDURES:

SD-03, Data

Furniture, Furnishings and Equipment; G.

As soon as practical and before start of installation, submit a complete list of furniture, furnishings, and equipment for approval. The list shall include, manufacturers' names, addresses and model, style or catalog numbers with trade names and include catalog cuts, colors, diagrams, drawings, and other descriptive data as may be required.

1.2 SUMMARY

This Section covers all materials, labor, services, and incidentals necessary for procurement, delivery and installation of furniture, furnishings, and equipment (FFE). All FFE shall be new and shall conform to the drawings and specifications. Manufacturers and model numbers are listed to establish required quality characteristics and materials of items to be provided. Installation shall be where indicated on the drawings or as specified herein.

1.3 GENERAL REQUIREMENTS

1.3.1 Quality

All materials and products shall be new material.

1.4 DELIVERY AND STORAGE

All equipment delivered and placed in storage shall be stored with protection from damage, the weather, humidity, temperature variations, dirt and dust, or other contaminants.

PART 2 PRODUCTS

2.1 STACK CHAIR

Total Quantity: 1002 in Dining Facility.
Dimensions: 0.55 m × 0.50 m × 0.79 m.
Salient Features: Four leg stack chair with wooden back and seat. Tubular steel frame shall be electro statically painted. Provide ganging capability.

2.2 FOLDING TABLE

Total Quantity: 167 in Dining Facility.
Salient Features: Rectangular, Folding tubular steel.
Dimensions: 2.00 m × 0.90 m × 0.76 m, 2 cm thick top.
Solid wood or MDF Top with PVC edging. Metal legs, electro statically painted.

PART 3 EXECUTION

3.1 PREPARATION

Prior to installation of FFE items, clean and vacuum floor surface to remove dust, debris and loose particles. Verify that components, including size and finish, are those specified before installing.

3.2 ASSEMBLY AND TESTING

Uncrate and completely assemble all FFE items. Uncrating, assembly and installation of items shall be accomplished by workmen skilled in this type of work. After placement, each item shall be tested as necessary to assure readiness for operation and use.

3.3 FIELD QUALITY CONTROL

Remove and replace items or components which are chipped, scratched or otherwise damaged.

3.4 INSPECTION AND CLEANING

A. Immediately prior to acceptance of the contract work, inspect and clean all items of FFE. Cleaning shall be as recommended by the manufacturer of the item.

B. Remove all surplus materials, rubbish and debris resulting from installation upon completion of work and leave areas of installation in neat and clean condition.

3.5 PROTECTION

Protect all FFE items against damage during remainder of construction period so that items will be without damage or deterioration at time of completion.

-- End of Section --

SECTION 13080

SEISMIC PROTECTION FOR MISCELLANEOUS EQUIPMENT

PART 1 GENERAL

1.1 REFERENCES

The publications listed below form a part of this specification to the extent referenced. The publications are referred to within the text by the basic designation only.

ASME INTERNATIONAL (ASME)

ASME B18.2.1	(1996 R 2005) Square and Hex Bolts and Screws, Inch Series

ASTM INTERNATIONAL (ASTM)

ASTM A 307	(2004) Carbon Steel Bolts and Studs, 60 000 PSI Tensile Strength
ASTM A 325	(2006) Structural Bolts, Steel, Heat Treated, 120/105 ksi Minimum Tensile Strength
ASTM A 36/A 36M	(2005) Carbon Structural Steel
ASTM A 500	(2003a) Cold-Formed Welded and Seamless Carbon Steel Structural Tubing in Rounds and Shapes
ASTM A 53/A 53M	(2006a) Pipe, Steel, Black and Hot-Dipped, Zinc-Coated, Welded and Seamless
ASTM A 563	(2004a) Carbon and Alloy Steel Nuts
ASTM A 572/A 572M	(2006) High-Strength Low-Alloy Columbium-Vanadium Structural Steel
ASTM A 603	(1998; R 2003) Zinc-Coated Steel Structural Wire Rope
ASTM A 653/A 653M	(2006a) Steel Sheet, Zinc-Coated (Galvanized) or Zinc-Iron Alloy-Coated (Galvannealed) by the Hot-Dip Process
ASTM E 488	(1996; R 2003) Strength of Anchors in Concrete and Masonry Elements

INTERNATIONAL CODE COUNCIL (ICC)

IBC	(2006) International Building Code

1.2 SYSTEM DESCRIPTION

1.2.1 General Requirements

The requirements for seismic protection measures described in this section shall be applied to the mechanical equipment and systems, the electrical equipment and systems outlined in Section 16070 SEISMIC PROTECTION FOR ELECTRICAL EQUIPMENT, and the miscellaneous equipment and systems listed below. Seismic protection requirements shall be in accordance with IBC, and shall be provided in addition to any other requirements called for in other sections of these specifications. The design for seismic protection shall be based on a Seismic Use Group I building occupancy and on site response coefficients for Ss= 1.28g and S_1=0.51g. Soil site classification will be determined by geotechnical investigation. Resistance to lateral forces induced by earthquakes shall be accomplished without consideration of friction resulting from gravity loads.

1.2.2 Miscellaneous Equipment and Systems

The bracing for the following miscellaneous equipment and systems shall be developed by the Contractor in accordance with the requirements of this specification:

Ceiling framing for drywall and acoustical ceilings

1.3 SUBMITTALS

Government approval is required for submittals with a "G" designation; submittals not having a "G" designation are for information only. When used, a designation following the "G" designation identifies the office that will review the submittal for the Government. The following shall be submitted in accordance with Section 01330 SUBMITTAL PROCEDURES:

SD-02 Shop Drawings

Bracing; G AED
Resilient Vibration Isolation Devices; G AED
Equipment Requirements; G AED

Detail drawings along with catalog cuts, templates, and erection and installation details, as appropriate, for the items listed. Submittals shall be complete in detail; shall indicate thickness, type, grade, class of metal, and dimensions; and shall show construction details, reinforcement, anchorage, and installation with relation to the building construction. For equipment and systems in buildings that have a performance objective higher than life-safety, the drawings shall be stamped by the registered engineer who stamps the calculations required above.

SD-03 Product Data

Bracing; G AED
Equipment Requirements; G AED

Copies of the design calculations with the detail drawings. Calculations shall be stamped by a registered engineer and shall verify the capability of structural members to which bracing is attached for carrying the load from the brace.

1.4 EQUIPMENT REQUIREMENTS

1.4.1 Rigidly Mounted Equipment

The specific items of equipment as indicated on the mechanical and electrical drawings to be furnished under this contract shall be constructed and assembled to withstand the seismic forces specified in IBC. For any rigid equipment which is rigidly attached on both sides of a building expansion joint, flexible joints for piping, electrical conduit, etc., that are capable of accommodating displacements equal to the full width of the joint in both orthogonal directions, shall be provided.

1.4.2 Nonrigid or Flexibly-Mounted Equipment

The specific items of equipment as indicated on the mechanical and electrical drawings to be furnished under this contract shall be constructed and assembled to resist a horizontal lateral force of one times the operating weight of the equipment at the vertical center of gravity of the equipment.

PART 2 PRODUCTS

2.1 BOLTS AND NUTS

Squarehead and hexhead bolts, and heavy hexagon nuts, bolts and nuts ASME B18.2.1, ASME B 18.2.2, or ASTM A 307 for bolts, and ASTM A 563 for nuts or ASTM A 325 for bolts and nuts. Bolts and nuts used underground and/or exposed to weather shall be galvanized and in accordance with ASTM A 153/153M.

2.2 SWAY BRACING

Material used for members listed in this section, shall be structural steel conforming with the following:

a. Plates, rods, and rolled shapes, ASTM A 36/A 36M. If the Contractor does the design, both ASTM A 36/A 36Mand ASTM A 572/A 572M, grade 503 will be allowed.

b. Wire rope, ASTM A 603.

c. Tubes, ASTM A 500, Grade B.

d. Pipes, ASTM A 53/A 53M, Type E or S, Grade B.

e. Light gauge angles, less than 6 mm thickness, ASTM A 653/A 653M.

PART 3 EXECUTION

3.1 BRACING

Bracing shall conform to the arrangements shown. Trapeze-type hanger shall be secured with not less than two 13 mm bolts.

3.2 BUILDING DRIFT

Sway braces for a piping run shall not be attached to two dissimilar

structural elements of a building that may respond differentially during an earthquake unless a flexible joint is provided.

3.3 ANCHOR BOLTS

3.3.1 Cast-In-Place

Floor or pad mounted equipment shall use cast-in-place anchor bolts, except as specified below. Two nuts for vibrating equipment applications and one nut for non-vibrating equipment applications shall be provided on each bolt. Anchor bolts shall conform to ASTM A 307. Anchor bolts shall have an embedded straight length equal to at least 12 times nominal diameter of the bolt. Anchor bolts that exceed the normal depth of equipment foundation piers or pads shall either extend into concrete floor or the foundation shall be increased in depth to accommodate bolt lengths.

3.3.2 Expansion or Chemically Bonded Anchors

Expansion or chemically bonded anchors shall not be used unless test data in accordance with ASTM E 488 has been provided to verify the adequacy of the specific anchor and application. Expansion or chemically bonded anchors shall not be used to resist pull-out in overhead and wall installations if the adhesive is manufactured with temperature sensitive epoxies and the location is accessible to a building fire. Expansion and chemically bonded anchors shall be installed in accordance with the manufacturer's recommendations. The allowable forces shall be adjusted for the spacing between anchor bolts and the distance between the anchor bolt and the nearest edge, as specified by the manufacturer.

3.3.2.1 General Testing

Expansion and chemically bonded anchors shall be tested in place after installation. The tests shall occur not more than 24 hours after installation of the anchor and shall be conducted by an independent testing agency; testing shall be performed on random anchor bolts as described below.

3.3.2.2 Torque Wrench Testing

Torque wrench testing shall be done on not less than 50 percent of the total installed expansion anchors and at least one anchor for every piece of equipment containing more than two anchors. The test torque shall equal the minimum required installation torque as required by the bolt manufacturer. Torque wrenches shall be calibrated at the beginning of each day the torque tests are performed. Torque wrenches shall be recalibrated for each bolt diameter whenever tests are run on bolts of various diameters. The applied torque shall be between 20 and 100 percent of wrench capacity. The test torque shall be reached within one half turn of the nut, except for 9 mm sleeve anchors which shall reach their torque by one quarter turn of the nut. If any anchor fails the test, similar anchors not previously tested shall be tested until 20 consecutive anchors pass. Failed anchors shall be retightened and retested to the specified torque; if the anchor still fails the test it shall be replaced.

3.3.2.3 Pullout Testing

Expansion and chemically bonded anchors shall be tested by applying a pullout load using a hydraulic ram attached to the anchor bolt. At least 5 percent of the anchors, but not less than 3 per day shall be tested. The

load shall be applied to the anchor without removing the nut; when that is not possible, the nut shall be removed and a threaded coupler shall be installed of the same tightness as the original nut. The test setup shall be checked to verify that the anchor is not restrained from withdrawing by the baseplate, the test fixture, or any other fixtures. The support for the testing apparatus shall be at least 1.5 times the embedment length away from the bolt being tested. Each tested anchor shall be loaded to 2 times the design tension value for the anchor. The anchor shall have no observable movement at the test load. If any anchor fails the test, similar anchors not previously tested shall be tested until 20 consecutive anchors pass. Failed anchors shall be retightened and retested to the specified load; if the anchor still fails the test it shall be replaced.

3.4 RESILIENT VIBRATION ISOLATION DEVICES

Where the need for these devices is determined, based on the magnitude of the design seismic forces, selection of anchor bolts for vibration isolation devices and/or snubbers for equipment base and foundations shall follow the same procedure as in paragraph ANCHOR BOLTS, except that an equipment weight equal to five times the actual equipment weight shall be used.

3.4.1 Resilient and Spring-Type Vibration Devices

Vibration isolation devices shall be selected so that the maximum movement of equipment from the static deflection point shall be 13 mm .

3.4.2 Multidirectional Seismic Snubbers

Multidirectional seismic snubbers employing elastomeric pads shall be installed on floor- or slab-mounted equipment. These snubbers shall provide 6 mm free vertical and horizontal movement from the static deflection point. Snubber medium shall consist of multiple pads of cotton duct and neoprene or other suitable materials arranged around a flanged steel trunnion so both horizontal and vertical forces are resisted by the snubber medium.

3.5 SWAY BRACES FOR PIPING

Transverse sway bracing for steel and copper pipe shall be provided at intervals not to exceed those shown on the drawings. Transverse sway bracing for pipes of materials other than steel and copper shall be provided at intervals not to exceed the hanger spacing as specified in Section 15400 PLUMBING, GENERAL PURPOSE. Bracing shall consist of at least one vertical angle 50 x 50 mm x 16 gauge and one diagonal angle of the same size.

3.5.1 Longitudinal Sway Bracing

Longitudinal sway bracing shall be provided.

3.5.2 Anchor Rods, Angles, and Bars

Anchor rods, angles, and bars shall be bolted to either pipe clamps or pipe flanges at one end and cast-in-place concrete or masonry insert or clip angles bolted to the steel structure on the other end. Rods shall be solid metal or pipe as specified below. Anchor rods, angles, and bars shall not exceed lengths given in the tabulation below.

3.5.3 Maximum Length for Anchor Braces

Type	Size (millimeters)	Maximum Length* (meters)
Angles	38 x 38 x 6	1.5
	50 x 50 x 6	2.0
	64 x 38 x 6	2.5
	75 x 64 x 6	2.5
	75 x 75 x 6	3.0
Rods	91	1.0
	22	1.0
Flat Bars	38 x 6	0.4
	50 x 6	0.4
	50 x 10	0.5
Pipes (40s)	25	2.0
	32	2.8
	40	3.2
	50	4.0

3.5.4 Bolts

Bolts used for attachment of anchors to pipe and structure shall be not less than 13 mm diameter.

3.6 EQUIPMENT SWAY BRACING

3.6.1 Suspended Equipment and Light Fixtures

Equipment sway bracing shall be provided for items supported from overhead floor or roof structural systems, including light fixtures. Braces shall consist of angles, rods, wire rope, bars, or pipes arranged as shown and secured at both ends with not less than 13 mm bolts. Sufficient braces shall be provided for equipment to resist a horizontal force as specified in IBC without exceeding safe working stress of bracing components. The Contractor shall provide, for approval, specific force calcualtions in accordance with Chapter 16 of IBC. for the equipment in the project. Details of equipment bracing shall be submitted for acceptance. In lieu of bracing with vertical supports, these items may be supported with hangers inclined at 45 degrees directed up and radially away from equipment and oriented symmetrically in 90-degree intervals on the horizontal plane, bisecting the angles of each corner of the equipment, provided that supporting members are properly sized to support operating weight of equipment when hangers are inclined at a 45-degree angle.

3.6.2 Floor or Pad Mounted Equipment

3.6.2.1 Shear Resistance

Floor mounted equipment shall be bolted to the floor. Requirements for the number and installation of bolts to resist shear forces shall be in accordance with paragraph ANCHOR BOLTS.

3.6.2.2 Overturning Resistance

The ratio of the overturning moment from seismic forces to the resisting moment due to gravity loads shall be used to determine if overturning forces need to be considered in the sizing of anchor bolts. Calculations shall be provided to verify the adequacy of the anchor bolts for combined shear and overturning.

-- End of Section --

SECTION 13090

X-RAY SHIELDING

PART 1 GENERAL

1.1 REFERENCES

The publications listed below form a part of this specification to the extent referenced. The publications are referred to in the text by basic designation only.

ASTM INTERNATIONAL (ASTM)

ASTM B 749	(1997) Lead and Lead Alloy Strip, Sheet, and Plate Products
ASTM C 36/C 36M	(1999) Gypsum Wallboard

NATIONAL COUNCIL ON RADIATION PROTECTION AND MEASUREMENTS (NCRP)

NCRP Rpt 35	(1970) Dental X-Ray Protection
NCRP Rpt 49	(1976) Structural Shielding Design and Evaluation for Medical Use of X-Rays and Gamma Rays of Energies up to 10 MeV
NCRP Rpt 102	(1989) Medical X-Ray, Electron Beam and Gamma-Ray Protection for Energies up to 50 MeV (Equipment Design, Performance and Use)

WINDOW AND DOOR MANUFACTURERS ASSOCIATION (WDMA)

WDMA I.S. 1	(1997) Wood Flush Doors

1.2 SYSTEM DESCRIPTION

X-ray shielding shall be constructed such that it is not impaired by joints, openings for ducts, pipes, or other openings through shielding, or conduits, service boxes, and other items embedded in the shielding. The shielding shall appear to be continuous. Lead patches, lead sleeves, and/or mazes shall be installed as required to provide continuity of the shielding. Sleeves shall be not less than one inch in length. Thicknesses indicated for shielding are minimum acceptable thickness.

1.3 MATERIAL AUTHENTICATION DATA INCLUDED IN DESIGN ANALYSIS

Items with a "G" designation require Government approval; items not having a "G" designation are for information only. The following is submitted in accordance with Section 01335 SUBMITTAL PROCEDURES FOR DESIGN/BUILD PROJECT. It is included in the Design Analysis for this project.

SD-02 Shop Drawings

Lead Sheet; G.

Drawings indicating thickness of lead at all locations; construction at floor, walls, ceiling, and columns; details of lead laps and lap securing methods; fastenings, profiles, details of items and accessories penetrating the shielding materials; and any special method of construction.

SD-03 Product Data

Lead Sheet; G.

Manufacturer's catalog cuts, descriptive data, and installation instructions.

1.4 DELIVERY, STORAGE AND HANDLING

Materials shall be delivered in the original containers bearing the name of the manufacturer and brand name. Shielding materials shall be stored off the ground under watertight cover. Damaged materials shall be removed from the premises.

1.5 WARRANTY

Lead sheet shielding materials shall be warranted against sagging and curling for 10 years.

PART 2 PRODUCTS

Basis of Design: Radiation Shielding Products by A & L SHIELDING

2.1 LEAD SHEET

Lead sheet shall conform to ASTM B 749, Grade C, thickness as shown.

2.2 LEAD-LINED GYPSUM WALLBOARD

Lead-lined gypsum wallboard shall be a single thickness of unpierced lead laminated to 16 mm (5/8 inch) thick gypsum board conforming to ASTM C 36/C 36M.

2.3 LEAD-HEADED NAILS

Lead-headed nails may be used to accomplish shielding not less than that provided by the barrier. The size, type and design shall be recommended by the manufacturer of material to be installed.

2.4 LEAD TABS OR CLIPS

Lead tabs or clips shall be unpierced sheet lead not less than the thickness of lead in the barrier. Prior to folding, the tabs shall be rectangular in shape and shall be the required size to provide an effective lead lap over an unleaded nail, screw, or tie wire penetration when folded.

2.5 LEAD-LINED WOOD DOORS

Lead-lined wood doors shall be good grade, hardwood veneer, solid core, in accordance with WDMA I.S. 1. Lead sheet shall extend to door edges and provide x-ray absorption equal to the partition in which the door is installed. Face veneer for lead-lined doors shall be to match adjacent doors. Doors shall have filler strips, crossbanding face veneers and hardwood edge strips glued under heavy pressure with contact adhesive.

2.5.1 Shielding

Cores shall be secured together with steel bolts, using washers under heads and nuts. Bolts shall be spaced not more than 38 mm from edges around door perimeter and not more than 200 mm on centers in both directions. Bolts shall be countersunk and have poured lead or lead dowels covering heads and nuts flush with face of core. Door thickness shall be manufacturer's standard for lead thickness used, unless shown otherwise.

2.5.2 Painting and Sealing Doors

Top and bottom edges of doors to be painted shall receive two factory coats of spar varnish before shipment to jobsite. Doors to be stained or have a natural finish shall receive two shop coats of water-resistant sealer before shipment to jobsite.

2.5.3 Door Hardware

Door hardware shall be as specified in Section 08710 DOOR HARDWARE. Mortises for floor hinge arms and top pivots with sheet lead and necessary lead plugs, sheet lead, stainless steel pans, bolts and screws shall be provided.

2.6 LEAD-LINED STEEL DOOR FRAMES

Steel frames shall be as specified in Section 08110 STEEL DOORS AND FRAMES. The inside of frames shall be lined with a single thickness of sheet lead. The thickness of the lead lining shall be the same as the lead lining of the system in which the frames are used. Linings shall be installed at the factory, and shall be continuous. Lining shall be formed to contour of frame. Lead shields shall be formed around areas prepared to receive hardware. Each lining shall be wide enough to provide and maintain an effective lead lap with the lead of the adjoining shielding units.

2.7 OPERATORS PROTECTIVE SCREEN

Operators protective screen shall be constructed of studs, surfaced with lead-lined gypsum wallboard conforming to ASTM C 36/C 36M secured to studs with appropriate fasteners, with lead washer or tabs. Plywood-hinged screens and fixed screens after installation shall be finished in the same manner as specified for doors. At corners, or where screen abuts a wall or floor, screen panels shall be joined to provide an effective lap of lead. Lead or lead-lined viewing window shall be built-in.

2.8 DESIGNATING PLAQUES

2.8.1 Required Information

Designating plaques shall be furnished and installed as specified below in rooms and as indicated on the drawings. Locations where shielding thickness changes, or is not continuous, shall be indicated on the plaque. Plaque shall be of aluminum, plastic, bakelite, or other approved materials and shall be sized to contain the required information as specified below.

2.8.2 X-Ray and Examination Rooms

One sign shall be provided for x-ray rooms lettered as follows:

"THE PARTITIONS, THE DOORS, AND THE LEAD-LINED SHIELD OF THIS ROOM HAVE BEEN INSULATED WITH SHEET LEAD 3 mm THICK."

2.8.3 Rooms With Nonshielded Partitions

One sign shall be provided for each lead-shielded partition in a room for which all partitions are not shielded. A sign shall be located on lead-insulated partition and lettered as follows:

"THIS PARTITION HAS BEEN SHIELDED TO THE HEIGHT OF 2.0 METERS WITH SHEET LEAD 3 mm THICK"

PART 3 EXECUTION

3.1 INSTALLATION

Installation shall be performed in accordance with drawings and approved manufacturer's recommendations and NCRP Rpt 35, NCRP Rpt 49, and NCRP Rpt 102.

3.1.1 Workmanship

Sheet lead shall be installed free of waves, lumps, and wrinkles and with a minimum of joints. Joints in sheet lead shall provide protection equivalent to the protection provided by the adjacent sheet lead. Joints shall be finished smooth and neat.

3.1.2 Protection

Lead shields shall be used to maintain continuity of protection where unshielded built-in items penetrate lead linings. Where outlet boxes, junction boxes, ducts, conduits, and similar items prevent the use of shields, lead sleeves or lead lining shall be used. Fasteners shall not disrupt the continuity of shielding.

3.2 Shielding

Sheet lead less than 3 mm-thick shall be applied in a single layer with a 38 mm minimum lap at joints. Sheet lead more than 3 mm thick shall be applied in two or more layers 3 mm or less in thickness with 38 mm minimum lap at joints or shall be applied in a single layer with joints butted and covered with lead strips not less than the thickness required for floor lining and as detailed.

3.3 LEAD-LINED GYPSUM WALLBOARD

Lead-lined gypsum wallboard shall be applied over supports as recommended by manufacturer and as specified in Section 09250 GYPSUM WALLBOARD. Method of predrilling or drilling pilot holes shall not cause deformation of the fastener and shall not cause distortion of wallboard. Wallboard shall be applied vertically, with long edges parallel to supports, and with lead linings placed next to supports. Blocking shall be provided at end joints.

3.3.1 Joints

Sheet-lead strips not less than the lead thickness used for wallboard and not less than 38 mm wide shall be installed on blocking and supports at all joints.

3.3.2 Corner Joints

Corner joints shall consist of 45 x 45 mm (1-3/4 x 1-3/4 inch) lead angle.

3.3.3 Wood Supports

The sheet-lead strips shall be secured to blocking and supports at outer edges with wire nails. Edges of wallboard shall then be butt-jointed and fastened to supports with lead-headed nails at approximately 200 mm on centers at joints and 300 mm on center at intermediate supports with nail heads driven slightly below the surface of wallboard.

3.3.4 Metal Supports

Edges of gypsum wallboard at metal studs shall be fastened with 25 mm (1 inch) long lead-headed screws. Heads shall be covered with 13 mm (1/2 inch) diameter lead disc cemented to wallboard and installed flush with surface of wallboard.

3.3.5 Finish Ply

Gypsum wallboard not scheduled to be plastered shall receive a finish ply of gypsum wallboard bonded to the first ply with laminating adhesive as recommended by the wallboard manufacturer. Nailing the finish ply will not be permitted. A shoring system shall be used to hold finish ply in place during adhesive drying period. Shoring shall be left in place at least 24 hours. Joint and corner treatment shall be as specified in Section 09250 GYPSUM WALLBOARD.

3.4 LEAD DOOR THRESHOLDS

Thresholds shall be installed in accordance with approved detail drawings and shall be constructed as detailed on plans. Prior to installation, lead threshold surfaces in contact with concrete shall be painted with a coat of asphalt paint or latex material.

3.5 LEAD-LINED WOOD DOORS

Doors shall be fit, hung, and trimmed as required. Doors shall be installed with a clearance of 2 mm at sides and top and minimum adequate clearance at bottom. Lock edge shall be beveled 3 mm (1/8 inch), and hardware shall be adjusted as required. Warp or twist of lead-lined doors after doors have been hung and finished shall not exceed 6 mm in any face dimension of door including full diagonal. Cuts required for installation shall be sealed with a clear varnish or sealer.

3.5.1 Door Hardware

Bolts and screws which penetrate lead lining shall be recessed on the side of the door opposite hardware and shall be plugged with lead plugs to match face of door. Nuts for securing surface-applied hardware such as hinges, door closers and automatic door operators shall be countersunk and covered with lead-lined 1.59 mm thick (16 gauge) stainless steel pans. Stainless steel pans shall be secured with round-head screws with dull chromium-plated finish. Cutouts for lock sets and latch cases shall be patched with sheet lead. Lead lining of the lock set and lead lining of the door shall be lapped to provide x-ray absorption equal to the door.

3.6 TESTING AND CERTIFICATION

Before and after x-ray equipment has been installed and placed in operating condition, the x-ray installation shall be surveyed by a qualified expert as defined in NCRP Rpt 35, NCRP Rpt 49, and NCRP Rpt 102. Survey shall be performed in accordance with NCRP Rpt 35, NCRP Rpt 49, and NCRP Rpt 102. Four copies of surveyor's report shall be furnished to the Government. Any part of x-ray shielding work found to be defective shall be corrected or replaced, including all other work affected thereby.

-- End of Section --

SECTION 13100

LIGHTNING PROTECTION SYSTEM

PART 1 GENERAL

1.1 REFERENCES

The publications listed below form a part of this specification to the extent referenced. The publications are referred to in the text by basic designation only.

AMERICAN NATIONAL STANDARDS INSTITUTE (ANSI)

ANSI C135.30	(1988) Zinc-Coated Ferrous Ground Rods for Overhead or Underground Line Construction

BRITISH STANDARDS INSTITUTION (BSI)

BS 6651	(1999) Code Of Practice For Protection Of Structures Against Lightning
BS 7430	(1998) Code of Practice for Earthing

NATIONAL FIRE PROTECTION ASSOCIATION (NFPA)

NFPA 70	(2005) National Electrical Code
NFPA 780	(1997) Installation of Lightning Protection Systems

UNDERWRITERS LABORATORIES (UL)

UL 96	(1994; Rev thru Jan 2000) Lightning Protection Components
UL 96A	(1994; Rev thr Jul 1998) Installation Requirements for Lightning Protection Systems
UL 467	(1993; R 2001) Grounding and Bonding Equipment

1.2 GENERAL REQUIREMENTS

1.2.1 Verification of Dimensions

The Contractor shall become familiar with all details of the work, verify all dimensions in the field, and shall advise the Contracting Officer of any discrepancy before performing the work. No departures shall be made without the prior approval of the Contracting Officer.

1.2.2 System Requirements

The system furnished under this specification shall consist of the standard products of a manufacturer regularly engaged in the production of lightning

protection systems and shall be the manufacturer's latest UL approved design. The lightning protection system shall conform to NFPA 70 and NFPA 780, UL 96 and UL 96A, UL 467, BS 6651 or BS 7430 except where requirements in excess thereof are specified herein.

1.2.3 Protection Location Requirements

Provide lightning protection at the roof of the power plant.

1.3 MATERIAL AUTHENTICATION DATA INCLUDED IN DESIGN ANALYSIS

Items with a "G" designation require Government approval; items not having a "G" designation are for information only. The following is submitted in accordance with Section 01335 SUBMITTAL PROCEDURES FOR DESIGN/BUILD PROJECT. It is included in the Design Analysis for this project.

SD-03 Product Data

Materials

Provide manufacturer's cut sheets for all products supplied in this section.

1.4 DOCUMENTATION FOR PROPOSED VARIANT PRODUCTS

For products not explicitly named in the specification that meet product requirement criteria named herein, product data as listed in article titled MATERIAL AUTHENTICATION DATA INCLUDED IN DESIGN ANALYSIS shall be submitted for review. Product information will be provided to establish that proposed product meets the requirements of this specification and has the indicated qualities related to type, function, dimension, in-service performance, physical properties, appearance, or other relevant characteristics that equal or exceed those of specified product. Product is consistent with the Contract Documents and will produce the indicated results, and is compatible with other portions of the Work.

PART 2 PRODUCTS

2.1 MANUFACTURER

Basis of Design: As indicated in this section.

Acceptable Manufacturers:

1. Basis of Design manufacturers.
2. Equivalent product complying with requirements of this specification for proposed variant products.

2.2 MATERIALS

2.2.1 General Requirements

No combination of materials shall be used that form an electrolytic couple of such nature that corrosion is accelerated in the presence of moisture unless moisture is permanently excluded from the junction of such metals. Where unusual conditions exist which would cause corrosion of conductors, conductors with protective coatings or oversize conductors shall be used. Where a mechanical hazard is involved, the conductor size shall be increased to compensate for the hazard or the conductors shall be protected

by covering them with molding or tubing made of wood or nonmagnetic material. When metallic conduit or tubing is used, the conductor shall be electrically connected at the upper and lower ends.

Basis of Design: Harger.

2.2.2 Main and Secondary Conductors

Conductors shall be in accordance with NFPA 780 and UL 96 for Class I, Class II, or Class II modified materials.

2.2.2.1 Copper

Copper conductors used on nonmetallic stacks shall weigh not less than 170 kg per 300 m (375 pounds per thousand feet), and the size of any wire in the cable shall be not less than No. 15 AWG. The thickness of any web or ribbon used on stacks shall be not less than No. 12 AWG. Counterpoise shall be copper conductors not smaller than No. 1/0 AWG.

2.2.3 Air Terminals

Terminals shall be in accordance with UL 96 and NFPA 780. Air terminals more than 600 mm in length shall be supported by a suitable brace, with guides not less than one-half the height of the terminal.

Basis of Design: Hanger 5824CUAT.

2.2.4 Ground Rods

Rods shall conform to UL 467, ANSI C135.30, BS 7430 or BS 6651.

Use Copper-clad Steel Grounding Rod (minimum 17 mm diameter and minimum 3000 mm in length), by Radsan, Wallis System Protection, Exoweld, Erico Cad weld or Thermoweld.

2.2.5 Connectors

Clamp-type connectors for splicing conductors shall conform to UL 96 for style and size as required for the installation.

2.2.6 Lightning Protection Components

Lightning protection components, such as bonding plates, air terminal supports, chimney bands, clips, and fasteners shall conform to UL 96, classes as applicable.

PART 3 EXECUTION

3.1 INTEGRAL SYSTEM

3.1.1 General Requirements

The lightning protection system shall consist of air terminals, roof conductors, down conductors, ground connections, and grounds, electrically interconnected to form the shortest distance to ground. All conductors on the structures shall be exposed except where conductors are in protective sleeves exposed on the outside walls. Secondary conductors shall interconnect with grounded metallic parts within the building. Interconnections made within side-flash distances shall be at or above the

level of the grounded metallic parts.

3.1.1.1 Air Terminals

Air terminal design and support shall be in accordance with NFPA 780. Terminals shall be rigidly connected to, and made electrically continuous with, roof conductors by means of pressure connectors or crimped joints of T-shaped malleable metal and connected to the air terminal by a dowel or threaded fitting. Air terminals at the ends of the structure shall be set not more than 600 mm (2 feet) from the ends of the ridge or edges and corners of roofs. Spacing of air terminals 600 mm (2 feet) in height on ridges, parapets, and around the perimeter of buildings with flat roofs shall not exceed 7.5 meters. In specific instances where it is necessary to exceed this spacing, the specified height of air terminals shall be increased not less than 50 mm for each 300 mm of increase over 7.5 meters. On large, flat or gently sloping roofs, as defined in NFPA 780, air terminals shall be placed at points of the intersection of imaginary lines dividing the surface into rectangles having sides not exceeding 15 m in length. Air terminals shall be secured against overturning either by attachment to the object to be protected or by means of a substantial tripod or other braces permanently and rigidly attached to the building or structure. Metal projections and metal parts of buildings, smokestacks, and other metal objects that do not contain hazardous materials and that may be struck but not appreciably damaged by lightning, need not be provided with air terminals. However, these metal objects shall be bonded to the lightning conductor through a metal conductor of the same unit weight per length as the main conductor. Where metal ventilators are installed, air terminals shall be mounted thereon, where practicable. Any air terminal erected by necessity adjacent to a metal ventilator shall be bonded to the ventilator near the top and bottom. Where metal ventilators are installed with air terminals mounted thereon, the air terminal shall not be more than 610 mm away from the farther edge or corner. If the air terminal is farther than this distance, an additional air terminal shall be added in order to meet this requirement. Where metal ventilators are installed with air terminals mounted adjacent, the air terminal shall not be more than 610 mm away from the farther edge or corner. If the air terminal is farther than this distance, an additional air terminal shall be added in order to meet this requirement.

3.1.1.2 Roof Conductors

Roof conductors shall be connected directly to the roof or ridge roll. Sharp bends or turns in conductors shall be avoided. Necessary turns shall have a radius of not less than 200 mm. Conductors shall preserve a downward or horizontal course and shall be rigidly fastened every 900 mm along the roof and down the building to ground. Metal ventilators shall be rigidly connected to the roof conductor at three places. All connections shall be electrically continuous. Roof conductors shall be coursed along the contours of flat roofs, ridges, parapets, and edges; and where necessary, over flat surfaces, in such a way as to join each air terminal to all the rest. Roof conductors surrounding tank tops, decks, flat surfaces, and flat roofs shall be connected to form a closed loop.

3.1.1.3 Down Conductors

Down conductors shall be electrically continuous from air terminals and roof conductors to grounding electrodes. Down conductors shall be coursed over extreme outer portions of the building, such as corners, with consideration given to the location of ground connections and air

terminals. Each building or structure shall have not less than two down conductors located as widely separated as practicable, at diagonally opposite corners. On rectangular structures having gable, hip, or gambrel roofs more than 35 m long, there shall be at least one additional down conductor for each additional 15 m of length or fraction thereof. On rectangular structures having French, flat, or sawtooth roofs exceeding 75 m in perimeter, there shall be at least one additional down conductor for each30 m of perimeter or fraction thereof. On an L- or T-shaped structure, there shall be at least one additional down conductor; on an H-shaped structure, at least two additional down conductors; and on a wing-built structure, at least one additional down conductor for each wing. On irregularly shaped structures, the total number of down conductors shall be sufficient to make the average distance between them along the perimeter not greater than 30 meters. On structures exceeding 15 m in height, there shall be at least one additional down conductor for each additional 18 m of height or fraction thereof, except that this application shall not cause down conductors to be placed about the perimeter of the structure at intervals of less than 15 meters. Additional down conductors shall be installed when necessary to avoid "dead ends" or branch conductors ending at air terminals, except where the air terminal is on a roof below the main protected level and the "dead end" or branch conductor is less than5 m in length and maintains a horizontal or downward coursing. Down conductors shall be equally and symmetrically spaced about the perimeter of the structure. Down conductors shall be protected by placing in pvc conduit for a minimum distance of 1800 mm 72 inches above finished grade level.

3.1.1.4 Interconnection of Metallic Parts

Metal doors, windows, and gutters shall be connected directly to the grounds or down conductors using not smaller than No. 6 copper conductor, or equivalent. Conductors placed where there is probability of unusual wear, mechanical injury, or corrosion shall be of greater electrical capacity than would normally be used, or shall be protected. The ground connection to metal doors and windows shall be by means of mechanical ties under pressure, or equivalent.

3.1.1.5 Ground Connections

Ground connections comprising continuations of down conductors from the structure to the grounding electrode shall securely connect the down conductor and ground in a manner to ensure electrical continuity between the two. All connections shall be of the clamp type. There shall be a ground connection for each down conductor. Metal water pipes and other large underground metallic objects shall be bonded together with all grounding mediums. Ground connections shall be protected from mechanical injury. In making ground connections, advantage shall be taken of all permanently moist places where practicable, although such places shall be avoided if the area is wet with waste water that contains chemical substances, especially those corrosive to metal.

3.1.1.6 Grounding Electrodes

A grounding electrode shall be provided for each down conductor located as shown. A driven ground shall extend into the earth for a distance of not less than 3.0 meters. Ground rods shall be set not less than 900 mm, nor more than 2.5 m, from the structures foundation. The complete installation shall have a total resistance to ground of not more than 10 ohms if a counterpoise is not used. Ground rods shall be tested individually prior to connection to the system and the system as a whole shall be tested not

less than 48 hours after rainfall. When the resistance of the complete installation exceeds the specified value or two ground rods individually exceed 10 ohms, the Contracting Officer shall be notified immediately. A counterpoise, where required, shall be of No. 1/0 copper cable or equivalent material having suitable resistance to corrosion and shall be laid around the perimeter of the structure in a trench not less than 600 mm deep at a distance not less than 900 mm nor more than 2.5 m from the nearest point of the structure. All connections between ground connectors and grounds or counterpoise, and between counterpoise and grounds shall be electrically continuous. Where so indicated on the drawings, an alternate method for grounding electrodes in shallow soil shall be provided by digging trenches radially from the building. The lower ends of the down conductors or their equivalent in the form of metal strips or wires are then buried in the trenches.

3.1.2 Metal Roofs

Wood-Frame, Wall-Bearing Masonry or Tile Structure with Metallic Roof and Nonmetallic Exterior Walls, or Reinforced Concrete Building with Metallic Roof: Metal roofs which are in the form of sections insulated from each other shall be made electrically continuous by bonding. Air terminals shall be connected to, and made electrically continuous with, the metal roof as well as the roof conductors and down conductors. Ridge cables and roof conductors shall be bonded to the roof at the upper and lower edges of the roof and at intervals not to exceed 30 meters. The down conductors shall be bonded to roof conductors and to the lower edge of the metal roof. Where the metal of the roof is in small sections, the air terminals and down conductors shall have connections made to at least four of the sections. All connections shall have electrical continuity and have a surface contact of at least 1935 square millimeters (3 square inches).

3.2 INTERCONNECTION OF METAL BODIES

Metal bodies of conductance shall be protected if not within the zone of protection of an air terminal. Metal bodies of conductance having an area of 0.258 square meters (400 square inches) or greater or a volume of 0.0164 cubic meters (1000 cubic inches) or greater shall be bonded to the lightning protection system using main size conductors and a bonding plate having a surface contact area of not less than 1935.5 square millimeters (3 square inches). Provisions shall be made to guard against the corrosive effect of bonding dissimilar metals. Metal bodies of inductance shall be bonded at their closest point to the lightning protection system using secondary bonding conductors and fittings. A metal body that exceeds 1.5 m in any dimension, that is situated wholly within a building, and that does not at any point come within 1.8 m of a lightning conductor or metal connected thereto shall be independently grounded.

3.3 FENCES

Except as indicated below, metal fences that are electrically continuous with metal posts extending at least 600 mm into the ground require no additional grounding. Other fences shall be grounded on each side of every gate. Fences shall be grounded by means of ground rods every 300 to 450 m of length when fences are located in isolated places, and every 150 to 225 m when in proximity to public roads, highways, and buildings. Where the fence consists of wooden posts and horizontal metal strands only, down conductors consisting of No. 8 copper wire or equivalent shall be run from the ground rod the full height of the fence and fastened to each wire, so as to be electrically continuous. The connection to ground shall be made

from the post where it is of metal and is electrically continuous with the fencing. All metal fences shall be grounded at or near points crossed by overhead lines in excess of 600 volts and at distances not exceeding 45 m on each side of line crossings.

3.4 INSPECTION

The lightning protection system will be inspected by the Contracting Officer to determine conformance with the requirements of this specification. No part of the system shall be concealed until so authorized by the Contracting Officer.

-- End of Section --

SECTION 13121

METAL BUILDING SYSTEMS

PART 1 GENERAL

1.1 REFERENCES

The publications listed below form a part of this specification to the extent referenced. The publications are referred to in the text by basic designation only.

ASTM INTERNATIONAL (ASTM)

ASTM A 36/A 36M	(2000a) Carbon Structural Steel
ASTM A 325M	(2002) Specification for High-Strength Bolts for Structural Steel Joints (Metric)
ASTM A 475	(1998) Specification for Zinc-Coated Steel Wire Strand
ASTM A 529/A 529M	(2000) High-Strength Carbon-Manganese Steel of Structural Quality
ASTM A 572/A 572M	(2000a) High-Strength Low-Alloy Columbium-Vanadium Structural Steel
ASTM A 755/A 755M	(2001) Specification for Steel Sheet, Metallic Coated by the Hot-Dip Process and Prepainted by the Coil-Coating Process for Exterior Exposed Building Products
ASTM A 792/A 792M	(1999) Steel Sheet, 55% Aluminum-Zinc Alloy-Coated by the Hot-Dip Process
ASTM A 992/A 992M	(2002) Specification for Steel for Structural Shapes for Use in Building Framing
ASTM A 1008/A 1008M	(2002) Specification for Steel, Sheet, Cold-Rolled, Carbon Structural, High-Strength Low-Alloy with Improved Formability
ASTM A 1011/A 1011M	(2002) Specification for Steel, Sheet and Strip, Hot-Rolled, Carbon, Structural, High-Strength Low-Alloy and High-Strength Low-Alloy with Improved Formability
ASTM C 665	(2001e1) Specification for Mineral-Fiber Blanket Thermal Insulation for Light Frame Construction and Manufactured Housing
ASTM C 1136	(1995) Flexible, Low Permeance Vapor

	Retarders for Thermal Insulation
ASTM F 1554	(1999) Specification for Anchor Bolts, Steel, 36, 55, and 105-ksi Yield Strength

AMERICAN SOCIETY OF CIVIL ENGINEERS (ASCE)

ASCE 7	(1998) Minimum Design Loads for Buildings and Other Structures

METAL BUILDING MANUFACTURERS ASSOCIATION (MBMA)

MBMA MBSM	(2002) Metal Building Systems Manual

SHEET METAL AND AIR CONDITIONING CONTRACTORS' NATIONAL ASSOCIATION (SMACNA)

SMACNA Arch. Manual	(1993; Errata; Addenda Oct 1997) Architectural Sheet Metal Manual

1.2 INTERNATIONAL REFERENCES

Where American standards are referenced, use named standards.

1.3 SYSTEM DESCRIPTION

A. General: Provide a complete, integrated set of metal building system manufacturer's standard mutually dependent components and assemblies that form a metal building system capable of withstanding structural and other loads, thermally induced movement, and exposure to weather without failure or infiltration of water into building interior. Include primary and secondary framing, metal roof panels, and accessories complying with requirements indicated.

   1. Provide metal building system of size and with spacings, slopes, and spans indicated.

B. Primary Frame Type:

   1. Rigid Clear Span: Solid-member, structural-framing system.

C. Secondary Frame Type: Manufacturer's standard purlins and joists.

D. Building size: As indicated on Contract Drawings.

E. Roof slope: As indicated on Contract Drawings.

F. Eave Height: As indicated on Contract Drawings.

G. Horizontal loads in the longitudinal direction may be resisted by "X" bracing if possible, or connections to the top of the cantilevered masonry walls. If the later system is utilized care must be taken to detail a system that will not add out of plan loading to the top of the walls. Detailing between the top of the walls and the metal building is the Metal Building Manufacturer's responsibility.

1.4 SYSTEM PERFORMANCE REQUIREMENTS

1.4.1 Description of building system:

1. Structural system: clear span rigid frame. All frame and column bases are to be "pin-connected". See Contract Drawings for conceptual framing system and column layout.

2. Building size: As indicated on Contract Drawings.

3. Roof slope: As indicated on Contract Drawings.

1.4.2 Structural Performance

Provide metal building systems capable of withstanding the effects of gravity loads and the following loads and stresses within limits and under conditions indicated:

1. Refer to Drawings for location and exact relationship of materials.

2. Design, fabricate, and erect in accord with AISC reference standards.

3. Design the structural system in accord with the design requirements of 2000 International Building Code and the following minimum requirements:

   a. Roof live load: 98kg/Square Meter on horizontal projection.
   b. Roof snow load: 75kg/Square Meter
   c. Wind load: As required by ASCE 7-98. Design wind speed is 122 Kilometers per hour, exposure "C.". Importance Factor = 1.0.
   d. Seismic Load: In accordance with the International Building Code with the following parameters; Ss=1.65g, S1=.75g, Use Group I, Site Class D, Importance Factor 1.0 or eq. as per UBC 1997. Base shear considered in design in ((3*Ca)/R)*W.
   e. Collateral Loads: Include additional dead loads other than the weight of metal building system for permanent items such as mechanical systems, electrical systems, and ceilings.
   f. Auxiliary Loads: Include dynamic live loads, such as those generated by cranes and materials-handling equipment indicated on Drawings.

4. In addition to other dead loads and live loads, design the roof framing to support ceilings, lighting, ductwork, and other equipment included in the work or as reasonably anticipated to be added in the future. This additional collateral load shall be a minimum of 37kg/Square Meter at the roof.

5. In addition to support of the required loads, the design shall consider the behavior of the structure to ensure serviceability. Limiting values of structural behavior shall be chosen with the due regard to the service conditions and intended function of the structure. Structural behaviors to consider include:

   a. Expansion and contraction.
   b. Deflection Limits: Engineer assemblies to withstand design loads with deflections no greater than the following:

      1) Purlins and Rafters: Vertical deflection of 1/180 of the span.

   c. Vibration.

d. Corrosion.
e. Design secondary framing system to accommodate deflection of primary building structure and construction tolerances, and to maintain clearances at openings.

1.5 SUBMITTALS

Government approval is required for submittals with a "G" designation; submittals not having a "G" designation are for information only. When used, a designation following the "G" designation identifies the office that will review the submittal for the Government. The following shall be submitted in accordance with Section 01330 SUBMITTAL PROCEDURES:

SD-02 Shop Drawings

Metal Building Systems

Detail drawings consisting of catalog cuts, design and erection drawings.

SD-03 Product Data

Manufacturer's Instructions

Manufacturer's literature for individual building component systems.

Qualifications

Qualifications of the manufacturer, and qualifications and experience of the building erector. A brief list of locations where buildings of similar design have been used shall be included with the detail drawings and shall also include information regarding date of completion, name and address of owner, and how the structure is used.

SD-07 Certificates

Metal Building Systems

a. A Certificate from the metal building manufacturer stating that the metal building was designed in accordance with MBMA MBSM.

b. Mill certification for structural bolts, framing steel, roofing and siding, and steel wall liner panels.

c. Warranty certificate. At the completion of the project the Contractor shall furnish signed copies of the 5 year Warranty for Metal Building Roof System, a sample copy of which is attached to this section, the 20-year Manufacturer's Material Warranties, and the Manufacturer's 20-year System Weathertightness Warranty where one is required.

Insulation

Certificate attesting that the polyisocyanurate insulation furnished for the project contains recovered material, and showing an estimated percent of such recovered material.

1.6 DELIVERY, STORAGE, AND HANDLING

Deliver components, sheets, panels, and other manufactured items so as not to be damaged or deformed. Package metal panels for protection during transportation and handling.

1.7 PROJECT CONDITIONS

Weather Limitations: Proceed with installation only when weather conditions permit metal panels to be installed according to manufacturers' written instructions and warranty requirements.

1.8 COORDINATION

Coordinate size and location of concrete foundations and casting of anchor-bolt inserts into foundation walls and footings. Concrete, reinforcement, and formwork requirements are specified in Division 3 Section "Cast-in-Place Concrete."

PART 2 PRODUCTS

2.1 STRUCTURAL FRAMING MATERIALS

A. W-Shapes: ASTM A 992/A 992M; ASTM A 572/A 572M; or ASTM A 529/A 529M.

B. Channels, Angles, M-Shapes, and S-Shapes: ASTM A 36/A 36M; ASTM A 572/A 572M; or ASTM A 529/A 529M.

C. Plate and Bar: ASTM A 36/A 36M; ASTM A 572/A 572M; or ASTM A 529/A 529M.

D. Structural-Steel Sheet: Hot-rolled, ASTM A 1011/A 1011M, Structural Steel (SS), Grades 205 through 380, or High-Strength Low Alloy Steel (HSLAS), Grades 310 through 480; or cold-rolled, ASTM A 1008/A 1008M, Structural Steel (SS), Grades 170 through 550, or High-Strength Low Alloy Steel (HSLAS), Grades 310 through 480.

E. Metallic-Coated Steel Sheet Prepainted with Coil Coating: Steel sheet metallic coated by the hot-dip process and prepainted by the coil-coating process to comply with ASTM A 755/A 755M.

1. Aluminum-Zinc Alloy-Coated Steel Sheet: ASTM A 792/A 792M, Structural Steel (SS), Grade 340 or 550; with Class AZM150 coating.

F. Non-High-Strength Bolts, Nuts, and Washers: Manufacturer's standard hex-head bolts; carbon-steel hex nuts; and plain (flat) steel washers.

1. Finish: Hot-dip zinc coating, manufacturer's standard.

G. High-Strength Bolts, Nuts, and Washers: ASTM A 325M, Type 1, heavy hex steel structural bolts; heavy hex carbon-steel nuts; and hardened carbon-steel washers.

1. Finish: Hot-dip zinc coating, manufacturer's standard.
2. Tension-Control, High-Strength Bolt-Nut-Washer Assemblies: manufacturer's standard heavy-hex-head steel structural bolts with splined ends.

a. Finish: Mechanically deposited zinc coating, manufacturer's

standard .

H. Unheaded Anchor Rods: ASTM A 572/A 572M, Grade 345.

1. Configuration: Straight.
2. Nuts: Manufacturer's standard hex carbon steel.
3. Plate Washers: Manufacturer's standard carbon steel.
4. Washers: Manufacturer's standard hardened carbon steel.
5. Finish: Hot-dip zinc coating, manufacturer's standard.

I. Headed Anchor Rods: ASTM F 1554, Grade 36, straight.

1. Nuts: Manufacturer's standard hex carbon steel.
2. Plate Washers: Manufacturer's standard carbon steel.
3. Washers: Manufacturer's standard hardened carbon steel.
4. Finish: Hot-dip zinc coating, manufacturer's standard.

J. Threaded Rods: ASTM A 572/A 572M, Grade 345 .

1. Nuts: Manufacturer's standard hex carbon steel.
2. Washers: Manufacturer's standard carbon steel.
3. Finish: Hot-dip zinc coating, Manufacturer's standard.

K. Primer: Manufacturer's standard red oxide.

2.2 MATERIALS FOR FIELD ASSEMBLED METAL PANELS

A. Metallic-Coated Steel Sheet with Coating: Steel sheet metallic coated by the hot-dip process.

1. Aluminum-Zinc Alloy-Coated Steel Sheet: ASTM A 792/A 792M, Structural Steel (SS), Grade 340 or 550; with Class AZM150 coating designation.
2. Surface: Smooth, flat finish.
3. Exposed Finishes: Manufacturers standard prepainted finish.

2.3 THERMAL INSULATION FOR FIELD ASSEMBLIED METAL PANELS

A. Mineral-Fiber-Blanket Insulation: ASTM C 665, type indicated below; consisting of fibers manufactured from glass.

1. Type III (blankets with reflective membrane covering), Category 1 (membrane is a vapor retarder), Class A (membrane-faced surface with a flame-spread index of 25 or less). Insulation shall have a minumum thickness of 150 mm and a density of 16 kg/m3.

B. Vapor-Retarder Facing: ASTM C 1136, with permeance not greater than 1.15 ng/Pa x s x sq. m.

1. Composition: White metallized-polypropylene film facing, fiberglass scrim reinforcement, and kraft-paper backing.

C. Retainer Strips: 0.5-mm- thick, formed, galvanized steel or PVC retainer clips colored to match insulation facing.

D. Vapor-Retarder Tape: Pressure-sensitive tape of type recommended by vapor-retarder manufacturer for sealing joints and penetrations in vapor retarder.

2.4 MISCELLANEOUS MATERIALS

A. Fasteners: Self-tapping screws, bolts, nuts, self-locking rivets and bolts, end-welded studs, and other suitable fasteners designed to withstand design loads. Provide fasteners with heads matching color of materials being fastened by means of plastic caps or factory-applied coating.

1. Fasteners for Metal Panels: Self-drilling Type 410 stainless-steel or self-tapping Type 304 stainless-steel or zinc-alloy-steel hex washer head, with EPDM or PVC washer under heads of fasteners bearing on weather side of metal panels.
2. Fasteners for Flashing and Trim: Blind fasteners or self-drilling screws with hex washer head.
3. Blind Fasteners: High-strength aluminum or stainless-steel rivets.

B. Bituminous Coating: Cold-applied asphalt mastic, compounded for 0.4-mm dry film thickness per coat. Provide inert-type noncorrosive compound free of asbestos fibers, sulfur components, and other deleterious impurities.

C. Nonmetallic, Shrinkage-Resistant Grout: Factory-packaged, nonmetallic aggregate grout, noncorrosive, nonstaining, mixed with water to consistency suitable for application and a 30-minute working time.

2.5 FABRICATION, GENERAL

A. General: Design components and field connections required for erection to permit easy assembly.

1. Mark each piece and part of the assembly to correspond with previously prepared erection drawings, diagrams, and instruction manuals.
2. Fabricate structural framing to produce clean, smooth cuts and bends. Punch holes of proper size, shape, and location. Members shall be free of cracks, tears, and ruptures.

B. Tolerances: Comply with "MBMA MBSM": Chapter IV, Section 9, "Fabrication and Erection Tolerances."

2.6 STRUCTURAL FRAMING

A. General:

1. Primary Framing: Shop fabricate framing components to indicated size and section with baseplates, bearing plates, stiffeners, and other items required for erection welded into place. Cut, form, punch, drill, and weld framing for bolted field assembly.

a. Make shop connections by welding or by using high-strength bolts.
b. Join flanges to webs of built-up members by a continuous submerged arc-welding process.
c. Brace compression flange of primary framing with steel angles or cold-formed structural tubing between frame web and purlin or girt web, so flange compressive strength is within allowable limits for any combination of loadings.
d. Weld clips to frames for attaching secondary framing members.
e. Shop Priming: Prepare surfaces for shop priming according to

SSPC-SP 2. Shop prime primary structural members with specified primer after fabrication.

2. Secondary Framing: Shop fabricate framing components to indicated size and section by roll-forming or break-forming, with baseplates, bearing plates, stiffeners, and other plates required for erection welded into place. Cut, form, punch, drill, and weld secondary framing for bolted field connections to primary framing.

   a. Make shop connections by welding or by using non-high-strength bolts.
   b. Shop Priming: Prepare uncoated surfaces for shop priming according to SSPC-SP 2. Shop prime uncoated secondary structural members with specified primer after fabrication.

B. Primary Framing: Manufacturer's standard structural primary framing system, designed to withstand required loads and specified requirements. Primary framing includes transverse and lean-to frames; rafter, rake, and canopy beams; sidewall, intermediate, end-wall, and corner columns; and wind bracing.

1. General: Provide frames with attachment plates, bearing plates, and splice members. Factory drill for field-bolted assembly. Provide frame span and spacing indicated.
2. Rigid Clear-Span Frames: I-shaped frame sections fabricated from shop-welded, built-up steel plates or structural-steel shapes. Interior columns are not permitted.
3. Frame Configuration: Single gable.
4. Exterior Column Type: Uniform depth or tapered, as standard with manufacturer.
5. Rafter Type: Uniform depth or tapered, as standard with manufacturer.

C. Secondary Framing: Manufacturer's standard secondary framing members, including purlins, girts, eave struts, flange bracing, base members, gable angles, clips, headers, jambs, and other miscellaneous structural members. Fabricate framing from cold-formed, structural-steel sheet or roll-formed, metallic-coated steel sheet prepainted with coil coating, unless otherwise indicated, to comply with the following:

1. Purlins: C- or Z-shaped sections; fabricated from minimum 1.5-mm-thick steel sheet, built-up steel plates, or structural-steel shapes; minimum 64-mm- wide flanges.

   a. Depth: As required to comply with system performance requirements.

2. Eave Struts: Unequal-flange, C-shaped sections; fabricated from 1.5-mm- thick steel sheet, built-up steel plates, or structural-steel shapes; to provide adequate backup for metal panels.
3. Sag Bracing: Minimum 25-by-25-by-3-mm structural-steel angles or rods.
4. Purlin Clips: Minimum 1.5-mm- thick, steel sheet. Provide galvanized clips where clips are connected to galvanized framing members.
5. Miscellaneous Structural Members: Manufacturer's standard sections fabricated from cold-formed, structural-steel sheet; built-up steel plates; or zinc-coated (galvanized) steel sheet;

designed to withstand required loads.

D. Bracing: Provide adjustable wind bracing as follows:

1. Rods: ASTM A 36/A 36M; ASTM A 572/A 572M; or ASTM A 529/A 529M; minimum 13-mm- diameter steel; threaded full length or threaded a minimum of 152 mm at each end.
2. Cable: ASTM A 475, 6-mm- diameter, extra-high-strength grade, Class B zinc-coated, 7-strand steel; with threaded end anchors.
3. Angles: Fabricated from structural-steel shapes to match primary framing, of size required to withstand design loads.
4. Bracing: Provide wind bracing using any method specified above, at manufacturer's option.

E. Bolts: Provide plain finish bolts for structural-framing components that are primed or finish painted. Provide hot-dipped galvanized bolts for structural-framing components that are galvanized.

F. Factory-Primed Finish: Apply specified primer immediately after cleaning and pretreating.

1. Prime primary, secondary, and end-wall structural-framing members to a minimum dry film thickness of 0.025 mm.

   a. Prime secondary steel framing formed from uncoated steel sheet to a minimum dry film thickness of 0.013 mm on each side.

2. Prime galvanized members with specified primer, after phosphoric acid pretreatment.

2.7 METAL ROOF PANELS

A. Tapered-Rib-Profile: Formed with raised, trapezoidal major ribs and intermediate stiffening ribs symmetrically spaced between major ribs; designed to be field assembled by lapping side edges of adjacent panels and mechanically attaching panels to supports using exposed fasteners in side laps.

1. Material: Aluminum-zinc alloy-coated steel sheet, 24 gage (0.70 mm) thick.
   a. Exterior Finish: Polyester.
2. Major-Rib Spacing: As standard with manufacturer.
3. Panel Coverage: As standard with manufacturer.
4. Panel Height: As standard with manufacturer.

2.8 METAL SOFFIT PANELS

A. General: Provide factory-formed metal soffit panels designed to be field assembled by lapping and interconnecting side edges of adjacent panels and mechanically attaching through panel to supports using concealed fasteners and factory-applied sealant in side laps. Include accessories required for weathertight installation. Factory prime interior face of panel and paint per Section 09900.

B. Metal Soffit Panels: Match profile and material of metal roof panels.

1. Finish: Match finish and color of metal roof panels.

2.9 ACCESSORIES

A. General: Provide accessories as standard with metal building system manufacturer and as specified. Fabricate and finish accessories at the factory to greatest extent possible, by manufacturer's standard procedures and processes. Comply with indicated profiles and with dimensional and structural requirements.

1. Form exposed sheet metal accessories that are without excessive oil canning, buckling, and tool marks and that are true to line and levels indicated, with exposed edges folded back to form hems.

B. Roof Panel Accessories: Provide components required for a complete metal roof panel assembly including copings, fasciae, corner units, ridge closures, clips, sealants, gaskets, fillers, closure strips, and similar items. Match material and finish of metal roof panels, unless otherwise indicated.

1. Closures: Provide closures at eaves and ridges, fabricated of same material as metal roof panels.
2. Clips: Manufacturer's standard, formed from steel sheet, designed to withstand negative-load requirements.
3. Cleats: Manufacturer's standard, mechanically seamed cleats formed from steel sheet.
4. Backing Plates: Provide metal backing plates at panel end splices, fabricated from material recommended by manufacturer.
5. Closure Strips: Closed-cell, expanded, cellular, rubber or crosslinked, polyolefin-foam or closed-cell laminated polyethylene; minimum 25-mm thick, flexible closure strips; cut or premolded to match metal roof panel profile. Provide closure strips where indicated or necessary to ensure weathertight construction.
6. Thermal Spacer Blocks: Where metal panels attach directly to purlins, provide thermal spacer blocks of thickness required to provide 25 mm standoff; fabricated from extruded polystyrene.

C. Flashing and Trim: Formed from minimum 0.40-mm thick, metallic-coated steel sheet or aluminum-zinc alloy-coated steel sheet prepainted with coil coating; finished to match adjacent metal panels.

1. Provide flashing and trim as required to seal against weather and to provide finished appearance. Locations include, but are not limited to, eaves, rakes, corners, bases, framed openings, ridges, fasciae, and fillers.

D. Gutters: Formed from minimum 0.40-mm thick, metallic-coated steel sheet or aluminum-zinc alloy-coated steel sheet prepainted with coil coating; finished to match roof fascia and rake trim. Match profile of gable trim, complete with end pieces, outlet tubes, and other special pieces as required. Fabricate in minimum 2438-mm long sections, sized according to SMACNA's "Architectural Sheet Metal Manual."

1. Gutter Supports: Fabricated from same material and finish as gutters; spaced 900 mm o.c.
2. Strainers: Bronze, copper, or aluminum wire ball type at outlets.

E. Downspouts: Formed from 0.4-mm thick, zinc-coated (galvanized) steel sheet or aluminum-zinc alloy-coated steel sheet prepainted with coil coating; finished to match metal wall panels. Fabricate in minimum 3 m

long sections, complete with formed elbows and offsets.

1. Mounting Straps: Fabricated from same material and finish as gutters; spaced 3 m o.c.

F. Roof Ventilators: Gravity type, complete with hardware, flashing, closures, and fittings.

1. Continuous or Sectional-Ridge Type: Factory-engineered and -fabricated, continuous unit; fabricated from minimum 0.4-mm thick, metallic-coated steel sheet or aluminum-zinc alloy-coated steel sheet prepainted with coil coating; finished to match metal roof panels. Fabricated in minimum 3-m long sections. Provide throat size and total length indicated, complete with side baffles, ventilator assembly, end caps, splice plates, and reinforcing diaphragms.

a. Bird Screening: Galvanized steel, 13-mm square mesh, 1.04-mm wire, or aluminum, 13-mm square mesh, 1.6-mm wire.
b. Dampers: Manually operated, spring-loaded, vertically rising type; chain and worm gear operator; with chain of length required to reach within 914 mm above floor.
c. Throat Size: 229 or 305 mm, as standard with manufacturer, and as required to comply with ventilation requirements.

2.10 FINISHES, GENERAL

A. Appearance of Finished Work: Variations in appearance of abutting or adjacent pieces are acceptable if they are within one-half of the range of approved Samples. Noticeable variations in the same piece are not acceptable. Variations in appearance of other components are acceptable if they are within the range of approved Samples and are assembled or installed to minimize contrast.

PART 3 EXECUTION

3.1 EXAMINATION

A. Examine substrates, areas, and conditions, with Erector present, for compliance with requirements for installation tolerances and other conditions affecting performance of work.

B. Before erection proceeds, survey elevations and locations of concrete- and masonry-bearing surfaces and locations of anchor rods, bearing plates, and other embedments to receive structural framing, with Erector present, for compliance with requirements and metal building system manufacturer's tolerances.

C. Proceed with erection only after unsatisfactory conditions have been corrected.

3.2 PREPARATION

A. Clean and prepare surfaces to be painted according to manufacturer's written instructions for each particular substrate condition.

B. Provide temporary shores, guys, braces, and other supports during erection to keep structural framing secure, plumb, and in alignment against temporary construction loads and loads equal in intensity to

design loads. Remove temporary supports when permanent structural framing, connections, and bracing are in place, unless otherwise indicated.

3.3 ERECTION OF STRUCTURAL FRAMING

A. Erect metal building system according to manufacturer's written erection instructions and erection drawings.

B. Do not field cut, drill, or alter structural members without written approval from metal building system manufacturer's professional engineer.

C. Set structural framing accurately in locations and to elevations indicated and according to AISC specifications referenced in this Section. Maintain structural stability of frame during erection.

D. Base and Bearing Plates: Clean concrete- and masonry-bearing surfaces of bond-reducing materials, and roughen surfaces prior to setting plates. Clean bottom surface of plates.

1. Set plates for structural members on wedges, shims, or setting nuts as required.
2. Tighten anchor rods after supported members have been positioned and plumbed. Do not remove wedges or shims but, if protruding, cut off flush with edge of plate before packing with grout.
3. Promptly pack grout solidly between bearing surfaces and plates so no voids remain. Neatly finish exposed surfaces; protect grout and allow to cure. Comply with manufacturer's written installation instructions for shrinkage-resistant grouts.

E. Align and adjust structural framing before permanently fastening. Before assembly, clean bearing surfaces and other surfaces that will be in permanent contact with framing. Perform necessary adjustments to compensate for discrepancies in elevations and alignment.

1. Level and plumb individual members of structure.
2. Make allowances for difference between temperature at time of erection and mean temperature when structure will be completed and in service.

F. Primary Framing: Erect framing true to line, level, plumb, rigid, and secure. Level baseplates to a true even plane with full bearing to supporting structures, set with double-nutted anchor bolts. Use grout to obtain uniform bearing and to maintain a level base-line elevation. Moist cure grout for not less than seven days after placement.

1. Make field connections using high-strength bolts installed according to RCSC's "Specification for Structural Joints Using ASTM A 325 or A 490 Bolts" for type of bolt and type of joint specified.

a. Joint Type: Snug tightened or pretensioned.

G. Secondary Framing: Erect framing true to line, level, plumb, rigid, and secure. Fasten secondary framing to primary framing using clips with field connections using non-high-strength bolts.

1. Provide rake or gable purlins with tight-fitting closure channels

and fasciae.
2. Provide supplemental framing at entire perimeter of openings, including doors, windows, louvers, ventilators, and other penetrations of roof.

H. Bracing: Install bracing in roof where indicated on erection drawings.

1. Tighten rod and cable bracing to avoid sag.
2. Locate interior end-bay bracing only where indicated.

I. Framing for Openings: Provide shapes of proper design and size to reinforce openings and to carry loads and vibrations imposed, including equipment furnished under mechanical and electrical work. Securely attach to structural framing.

J. Erection Tolerances: Maintain erection tolerances of structural framing within AISC's "Code of Standard Practice for Steel Buildings and Bridges."

3.4 METAL PANEL INSTALLATION, GENERAL

A. Examination: Examine primary and secondary framing to verify that structural panel support members and anchorages have been installed within alignment tolerances required by manufacturer.

1. Examine roughing-in for components and systems penetrating metal panels to verify actual locations of penetrations relative to seam locations of metal panels before metal panel installation.

B. General: Anchor metal panels and other components of the Work securely in place, with provisions for thermal and structural movement.

1. Field cut metal panels as required for doors, windows, and other openings. Cut openings as small as possible, neatly to size required, and without damage to adjacent metal panel finishes.

   a. Field cutting of metal panels by torch is not permitted unless approved in writing by manufacturer.

2. Install metal panels perpendicular to structural supports, unless otherwise indicated.
3. Flash and seal metal panels with weather closures at perimeter of openings and similar elements. Fasten with self-tapping screws.
4. Locate and space fastenings in uniform vertical and horizontal alignment.
5. Locate metal panel splices over, but not attached to, structural supports with end laps in alignment. Stagger panel splices and end laps to avoid a four-panel lap splice condition.
6. Lap metal flashing over metal panels to allow moisture to run over and off the material.

C. Lap-Seam Metal Panels: Install screw fasteners with power tools having controlled torque adjusted to compress neoprene washer tightly without damage to washer, screw threads, or metal panels. Install screws in predrilled holes.

1. Arrange and nest side-lap joints so prevailing winds blow over, not into, lapped joints. Lap ribbed or fluted sheets one full rib corrugation. Apply metal panels and associated items for neat and

weathertight enclosure. Avoid "panel creep" or application not true to line.

D. Metal Protection: Where dissimilar metals will contact each other or corrosive substrates, protect against galvanic action by painting contact surfaces with bituminous coating, by applying rubberized-asphalt underlayment to each contact surface, or by other permanent separation as recommended by metal roof panel manufacturer.

3.5 METAL ROOF PANEL INSTALLATION

A. General: Provide metal roof panels of full length from eave to ridge, unless otherwise indicated or restricted by shipping limitations.

1. Install ridge caps as metal roof panel work proceeds.
2. Flash and seal metal roof panels with weather closures at eaves and rakes. Fasten with self-tapping screws.

B. Field-Assembled, Standing-Seam Metal Roof Panels: Fasten metal roof panels to supports with concealed clips at each standing-seam joint at location, spacing, and with fasteners recommended by manufacturer.

1. Install clips to supports with self-tapping fasteners.
2. Install pressure plates at locations indicated in manufacturer's written installation instructions.
3. Snap Joint: Nest standing seams and fasten together by interlocking and completely engaging factory-applied sealant.
4. Rigidly fasten eave end of metal roof panels and allow ridge end free movement due to thermal expansion and contraction. Predrill panels for fasteners.
5. Provide metal closures at peaksandeach side of ridge caps.

C. Field-Assembled, Lap-Seam Metal Roof Panels: Fasten metal roof panels to supports with exposed fasteners at each lapped joint at location and spacing recommended by manufacturer.

1. Provide metal-backed washers under heads of exposed fasteners bearing on weather side of metal roof panels.
2. Provide sealant tape at lapped joints of metal roof panels and between panels and protruding equipment, vents, and accessories.
3. Apply a continuous ribbon of sealant tape to weather-side surface of fastenings on end laps and on side laps of nesting-type metal panels; on side laps of ribbed or fluted metal panels; and elsewhere as needed to make metal panels weatherproof to driving rains.
4. At metal panel splices, nest panels with minimum 152-mm end lap, sealed with butyl-rubber sealant and fastened together by interlocking clamping plates.

D. Metal Fascia Panels: Align bottom of metal panels and fasten with blind rivets, bolts, or self-tapping screws. Flash and seal metal panels with weather closures where fasciae meet soffits, along lower panel edges, and at perimeter of all openings.

E. Metal Roof Panel Installation Tolerances: Shim and align metal roof panels within installed tolerance of 6 mm in 6 m on slope and location lines as indicated and within 3-mm offset of adjoining faces and of alignment of matching profiles.

3.6 THERMAL INSULATION INSTALLATION FOR FIELD ASSEMBLED METAL PANELS

A. General: Install insulation concurrently with metal panel installation, in thickness indicated to cover entire surface, according to manufacturer's written instructions.

1. Set vapor-retarder-faced units with vapor retarder to warm side of construction, unless otherwise indicated. Do not obstruct ventilation spaces, except for firestopping.
2. Tape joints and ruptures in vapor retarder, and seal each continuous area of insulation to surrounding construction to ensure airtight installation.
3. Install factory-laminated, vapor-retarder-faced blankets straight and true in one-piece lengths with both sets of facing tabs sealed to provide a complete vapor retarder.

B. Blanket Roof Insulation: Install insulation in metal building manufacturer's standard fashion.

1. Retainer Strips: Install retainer strips at each longitudinal insulation joint, straight and taut, nesting with secondary framing to hold insulation in place.

3.7 ACCESSORY INSTALLATION

A. General: Install accessories with positive anchorage to building and weathertight mounting, and provide for thermal expansion. Coordinate installation with flashings and other components.

1. Install components required for a complete metal roof panel assembly including trim, copings, ridge closures, seam covers, flashings, sealants, gaskets, fillers, closure strips, and similar items.
2. Install components for a complete metal wall panel assembly including trim, copings, corners, seam covers, flashings, sealants, gaskets, fillers, closure strips, and similar items.
3. Where dissimilar metals will contact each other or corrosive substrates, protect against galvanic action by painting contact surfaces with bituminous coating, by applying rubberized-asphalt underlayment to each contact surface, or by other permanent separation as recommended by manufacturer.

B. Flashing and Trim: Comply with performance requirements, manufacturer's written installation instructions, and SMACNA Arch. Manual. Provide concealed fasteners where possible, and set units true to line and level as indicated. Install work with laps, joints, and seams that will be permanently watertight and weather resistant.

1. Install exposed flashing and trim that is without excessive oil canning, buckling, and tool marks and that is true to line and levels indicated, with exposed edges folded back to form hems. Install sheet metal flashing and trim to fit substrates and to result in waterproof and weather-resistant performance.
2. Expansion Provisions: Provide for thermal expansion of exposed flashing and trim. Space movement joints at a maximum of 3 m with no joints allowed within 600 mm of corner or intersection. Where lapped or bayonet-type expansion provisions cannot be used or would not be sufficiently weather resistant and waterproof, form

expansion joints of intermeshing hooked flanges, not less than 25 mm deep, filled with mastic sealant (concealed within joints).

C. Gutters: Join sections with riveted and soldered or lapped and sealed joints. Attach gutters to eave with gutter hangers spaced not more than 1.2 m o.c. using manufacturer's standard fasteners. Provide end closures and seal watertight with sealant. Provide for thermal expansion.

D. Downspouts: Join sections with 38-mm telescoping joints. Provide fasteners designed to hold downspouts securely 25 mm away from walls; locate fasteners at top and bottom and at approximately 1500 mm o.c. in between.

1. Provide elbows at base of downspouts to direct water away from building.
2. Tie downspouts to underground drainage system indicated.

E. Continuous Roof Ventilators: Set ventilators complete with necessary hardware, anchors, dampers, weather guards, rain caps, and equipment supports. Join sections with splice plates and end-cap skirt assemblies where required to achieve indicated length. Install preformed filler strips at base to seal ventilator to metal roof panels.

3.8 ADJUSTING

Roof Ventilators : After completing installation, including work by other trades, lubricate, test, and adjust units to operate easily, free of warp, twist, or distortion as needed to provide fully functioning units.

3.9 CLEANING AND PROTECTION

A. Repair damaged galvanized coatings on galvanized items with galvanized repair paint according to manufacturer's written instructions.

B. Touchup Painting: After erection, promptly clean, prepare, and prime or reprime field connections, rust spots, and abraded surfaces of prime-painted structural framing, bearing plates, and accessories.

1. Clean and prepare surfaces by SSPC-SP 2, "Hand Tool Cleaning," or SSPC-SP 3, "Power Tool Cleaning."
2. Apply a compatible primer of same type as shop primer used on adjacent surfaces.

C. Touchup Painting: Cleaning and touchup painting are specified in Division 9 painting Section.

-- End of Section --

SECTION 13202

FUEL STORAGE SYSTEMS

PART 1 GENERAL

1.1 REFERENCES

The publications listed below form a part of this specification to the extent referenced. The publications are referred to within the text by the basic designation only.

AMERICAN ASSOCIATION OF STATE HIGHWAY AND TRANSPORTATION OFFICIALS (AASHTO)

AASHTO HB-17	(2002; Errata 2003; Errata 2005) Standard Specifications for Highway Bridges

AMERICAN PETROLEUM INSTITUTE (API)

API RP 1110	(1997) Pressure Testing of Liquid Petroleum Pipelines
API Spec 1581	(2002) Specifications and Qualification Procedures for Aviation Jet Fuel Filter/Separators
API Spec 5L	(2004) Specification for Line Pipe
API Spec 6D	(2002; Errata 2005) Specification for Pipeline Valves
API Spec 6FA	(1999; Errata 2006) Specification for Fire Test for Valves
API Std 1631	(2001) Interior Lining and Periodic Inspection of Underground Storage Tanks
API Std 594	(2004) Check Valves: Wafer, Wafer-Lug and Double-Flanged Type
API Std 607	(2005) Fire Test for Soft-Seated Quarter-Turn Valves
API Std 610	(2004) Centrifugal Pumps for Petroleum, Petrochemical, and Natural Gas Industries

AMERICAN WATER WORKS ASSOCIATION(AWWA)

AWWA C203	(2002) Coal-Tar Protective Coatings and Linings for Steel Water Pipelines - Enamel and Tape - Hot-Applied

AMERICAN WELDING SOCIETY (AWS)

AWS A5.1/A5.1M	(2004; Errata 2004) Carbon Steel

	Electrodes for Shielded Metal Arc Welding
AWS A5.4/A5.4M	(2006) Stainless Steel Electrodes for Shielded Metal Arc Welding

ASME INTERNATIONAL (ASME)

ASME B16.11	(2005) Forged Fittings, Socket-Welding and Threaded
ASME B16.21	(2005) Nonmetallic Flat Gaskets for Pipe Flanges
ASME B16.34	(2004) Valves - Flanged, Threaded and Welding End
ASME B16.39	(1998) Malleable Iron Threaded Pipe Unions, Classes 150, 250 and 300
ASME B16.5	(2003) Pipe Flanges and Flanged Fittings, NPS 1/2 Through NPS 24 Metric/Inch Standard
ASME B16.9	(2003) Factory-Made Wrought Buttwelding Fittings
ASME B31.3	(2004) Process Piping
ASME B40.100	(2006) Pressure Gauges and Gauge Attachments
ASME BPVC SEC IX	(2004; 2005 Addenda; 2006 Addenda) Boiler and Pressure Vessel Code; Section IX, Welding and Brazing Qualifications
ASME BPVC SEC VIII D1	(2004; 2005 Addenda; 2006 Addenda) Boiler and Pressure Vessel Code; Section VIII, Pressure Vessels Division 1 - Basic Coverage

ASTM INTERNATIONAL (ASTM)

ASTM A 167	(1999; R 2004) Stainless and Heat-Resisting Chromium-Nickel Steel Plate, Sheet, and Strip
ASTM A 181/A 181M	(2006) Carbon Steel Forgings, for General-Purpose Piping
ASTM A 182/A 182M	(2006) Forged or Rolled Alloy-Steel Pipe Flanges, Forged Fittings, and Valves and Parts for High-Temperature Service
ASTM A 193/A 193M	(2006a) Alloy-Steel and Stainless Steel Bolting Materials for High-Temperature Service
ASTM A 194/A 194M	(2006a) Carbon and Alloy Steel Nuts for Bolts for High Pressure or High Temperature Service or Both

ASTM A 216/A 216M	(2004) Steel Castings, Carbon, Suitable for Fusion Welding, for High-Temperature Service
ASTM A 234/A 234M	(2006a) Piping Fittings of Wrought Carbon Steel and Alloy Steel for Moderate and High Temperature Service
ASTM A 27/A 27M	(2005) Steel Castings, Carbon, for General Application
ASTM A 276	(2006) Stainless Steel Bars and Shapes
ASTM A 307	(2004e1) Carbon Steel Bolts and Studs, 60 000 PSI Tensile Strength
ASTM A 36/A 36M	(2005) Carbon Structural Steel
ASTM A 53/A 53M	(2006a) Pipe, Steel, Black and Hot-Dipped, Zinc-Coated, Welded and Seamless
ASTM A 733	(2003) Welded and Seamless Carbon Steel and Austenitic Stainless Steel Pipe Nipples
ASTM A 743/A 743M	(2006) Castings, Iron-Chromium, Iron-Chromium-Nickel, Corrosion Resistant, for General Application
ASTM B 26/B 26M	(2005) Aluminum-Alloy Sand Castings
ASTM B 687	(1999; R 2005e1) Brass, Copper, and Chromium-Plated Pipe Nipples
ASTM C 33	(2003) Concrete Aggregates
ASTM D 229	(2001) Rigid Sheet and Plate Materials Used for Electrical Insulation
ASTM D 5677	(2000) Fiberglass (Glass-Fiber-Reinforced Thermosetting-Resin) Pipe and Pipe Fittings, Adhesive Bonded Joint Type, for Aviation Jet Turbine Fuel Lines
ASTM F 1199	(1988; R 2004) Cast (All Temperatures and Pressures) and Welded Pipe Line Strainers (150 psig and 150 degrees F Maximum)
ASTM F 1200	(1988; R 2004) Fabricated (Welded) Pipe Line Strainers (Above 150 psig and 150 degrees F)
ASTM F 436M	(2004) Hardened Steel Washers (Metric)

MANUFACTURERS STANDARDIZATION SOCIETY OF THE VALVE AND FITTINGS INDUSTRY (MSS)

MSS SP-58	(2002) Pipe Hangers and Supports - Materials, Design and Manufacture

MSS SP-69	(2003) Pipe Hangers and Supports - Selection and Application

NACE INTERNATIONAL (NACE)

NACE RP0169	(2002) Control of External Corrosion on Underground or Submerged Metallic Piping Systems
NACE RP0185	(1996) Extruded, Polyolefin Resin Coating Systems with Soft Adhesives for Underground or Submerged Pipe

NATIONAL ELECTRICAL MANUFACTURERS ASSOCIATION (NEMA)

NEMA 250	(2003) Enclosures for Electrical Equipment (1000 Volts Maximum)

NATIONAL FIRE PROTECTION ASSOCIATION (NFPA)

NFPA 30	(2003; Errata 2004; Errata 2006) Flammable and Combustible Liquids Code
NFPA 30A	(2003; TIA 2003) Code for Motor Fuel Dispensing Facilities and Repair Garages
NFPA 70	(2005; TIA 2005) National Electrical Code

STEEL TANK INSTITUTE (STI)

STI F911	(1998) Standard for Diked Aboveground Storage Tanks

THE SOCIETY FOR PROTECTIVE COATINGS (SSPC)

SSPC SP 6	(2000; E 2004) Commercial Blast Cleaning

UNDERWRITERS LABORATORIES (UL)

UL 142	(2006) Steel Aboveground Tanks for Flammable and Combustible Liquids
UL 567	(2003; Rev thru Oct 2004) emergency Breakaway Fittings, Swivel Connectors and Pipe-Connection Fittings for Petroleum Products and LP-Gas
UL 913	(2002; Rev thru Aug 2004) Intrinsically Safe Apparatus and Associated Apparatus for Use in Class I, II, and III, Division 1, Hazardous (Classified) Locations

1.2 SYSTEM DESCRIPTION

The work shall include the design, fabrication and installation of the entire fuel storage and dispensing type system in conformance with pertinent federal, state, and local code requirements. The completed installation shall conform to NFPA 30 and NFPA 30A as applicable.

1.3 SUBMITTALS

Government approval is required for submittals with a "G" designation; submittals not having a "G" designation are for information only. When used, a designation following the "G" designation identifies the office that will review the submittal for the Government. The following shall be submitted in accordance with Section 01330 SUBMITTAL PROCEDURES:

SD-02 Shop Drawings

Fueling System; G AED

Detail drawings of the fueling system including a complete list of equipment and materials, as specified.

Monitoring Systems; G AED.

Detail drawings of the monitoring system including a complete list of equipment and materials, as specified.

SD-03 Product Data

Fueling System; G AED.

Manufacturer's standard catalog data, prior to the purchase or installation of the particular component, highlighted to show brand name, model number, size, options, performance charts and curves, etc., in sufficient detail to demonstrate compliance with contract requirements on all parts and equipment.

Permitting.

Copies of all required federal, state, and local permits.

Registration.

Required tank registration forms, 30 days after contract award, in order for the Contracting Officer to submit the forms to the regulatory agency.

Spare Parts Data.

Spare parts data for each different item of equipment specified.

Installation.

Manufacturer's installation instructions and procedures on all parts and equipment.

Framed Instructions.

Framed instructions for posting, at least 2 weeks prior to construction completion.

Monitoring Systems.

System diagrams for posting, at least 2 weeks prior to construction completion, including distance markings so that alarm

indications can be correlated to leak location in plan view if a cable detection system is used. The diagrams shall include a piping and wiring display map with schematic diagrams from the leak detection system manufacturer. The diagrams shall be framed under glass or laminated plastic and be posted where indicated by the Contracting Officer.

Filter-Separator Factory Tests.

A schedule, at least 2 weeks prior to the factory tests, which identifies the date, time, and location for the tests.

Tests.

A letter, at least 10 working days in advance of each test, advising the Contracting Officer of the test. Individual letters shall be provided for each test specified herein.

Demonstrations; G AED.

A letter, at least 14 working days prior to the proposed training date, scheduling a proposed date for conducting the onsite training.

Experience.

A letter listing prior projects, the date of construction, a point of contact for each prior project, the scope of work of each prior project, and a detailed list of work performed. The letter shall also provide evidence of prior manufacturer's training, state licensing, and other related information.

Welding.

A letter listing the qualifying procedures for each welder. The letter shall include supporting data such as test procedures used, what was tested to, etc., and a list of the names of all qualified welders and their identification symbols.

Verification of Dimensions.

A letter stating the date the site was visited and a listing of all discrepancies found.

Fuel Supply.

A letter, at least 30 days prior to fuel delivery, stating the amount of fuel required for testing, flushing, cleaning, or startup of the system. The letter shall define the required dates of each fuel delivery necessary.

Exterior Coating for Belowground Steel Piping.

Certification, prior to performing the exterior coating tests, from the tester manufacturer of the electric holiday detector's latest calibration date and crest voltage testing.

SD-06 Test Reports

Filter-Separator Factory Tests; G AED.

Copies of the report in bound letter-size booklets. Report shall certify compliance with the testing and qualification procedures defined in API Spec 1581. The report shall contain complete records of the tests including data sheets, performance curves, chronological test records, photographs, sample calculations, test procedures, and a description of the test apparatus. The report shall include color photographs of the sample elements before and after tests.

Tests; G AED.

Copies of each test containing the information described below in bound letter-size booklets. Individual reports shall be provided for the storage tank tests, the piping tests, the system performance tests, the high level alarm test, and the system leak tests. Drawings shall be folded blue lines, with the title block visible.

a. The date the tests were performed.

b. A list of equipment used, with calibration certifications.

c. A copy of measurements taken.

d. The parameters to be verified.

e. The condition specified for the parameter.

f. The inspection results, signed, dated, and certified by the installer. The certification shall state that required procedures were accomplished, that the procedures were conducted in compliance with the plans and specifications.

g. A description of adjustments performed.

SD-10 Operation and Maintenance Data

Operation and Maintenance Manuals.

Complete copies of operation manuals in bound letter-size booklets listing step-by-step procedures required for system startup, operation, and shutdown at least two weeks prior to the demonstrations. The manuals shall include the manufacturer's name, model number, service manual, a brief description of each piece of equipment, and the basic operating features of each piece of equipment. The manuals shall include procedures necessary for annual tightness testing of the storage tanks and secondary containment piping.

Complete copies of maintenance manuals in bound letter-size booklets listing routine maintenance procedures, possible breakdowns and repairs, and a trouble shooting guide at least 2 weeks prior to the demonstrations. The manuals shall include piping, equipment layouts, and simplified wiring and control diagrams of the system as installed.

1.4 QUALIFICATIONS

1.4.1 Experience

Each installation Contractor shall have successfully completed at least 3 projects of the same scope and the same size or larger within the last 6 years. Each installation Contractor shall demonstrate specific installation experience in regard to the specific system installation to be performed. Each installation Contractor shall have taken, if applicable, manufacturer's training courses on the installation of piping, leak detection, and tank management systems and meet the licensing requirements in the state.

1.4.2 Welding

Welding shall be in accordance with qualifying procedures using performance qualified welders and welding operators. Welding tests shall be performed at the work site. Procedures and welders shall be qualified in accordance with ASME BPVC SEC IX. Each welder or welding operator shall apply his assigned symbol near each weld he makes as a permanent record. Structural members shall be welded in accordance with Section 05 05 23.00 14 WELDING, STRUCTURAL.

1.5 REGULATORY REQUIREMENTS

1.5.1 Permitting

Contractor shall obtain necessary permits in conjunction with the installation of belowground storage tanks as required by federal, state, or local authority.

1.5.2 Registration

Contractor shall obtain and complete all required tank registration forms required by federal, state, and local authorities.

1.6 DELIVERY, STORAGE, AND HANDLING

Stored items shall be protected from the weather and contamination. Proper protection and care of material before, during, and after installation shall be the Contractor's responsibility. Any materials found to be damaged shall be replaced at the Contractor's expense. During installation, piping and similar openings shall be capped to keep out dirt and other foreign matter.

1.7 PROJECT/SITE CONDITIONS

1.7.1 Verification of Dimensions

After becoming familiar with all details of the project, the Contractor shall verify dimensions in the field, and advise the Contracting Officer of any discrepancy before performing any work.

1.7.2 Fuel Supply

Fuel required for the flushing, cleaning, and testing of materials, equipment, piping, meters, pumps, instruments, etc., as specified in this section shall be provided by the Contracting Officer. Fuel will be provided by tank trucks. The Contracting Officer will furnish the tank

trucks, operators, equipment, and services required for the tank truck operations. The Contractor shall provide the labor, equipment, appliances, and materials required for the flushing, cleaning, and testing operations. Systems shall not be flushed, cleaned, or tested with any fuel or liquid not intended for final system operation. Fuel used in the system shall remain the property of the Government. Fuel shortages not attributable to normal handling losses shall be reimbursed to the Government.

1.7.3 Safety Requirements

Exposed moving parts, parts that produce high operating temperatures and pressures, parts which may be electrically energized, and parts that may be a hazard to operating personnel shall be insulated, fully enclosed, guarded, or fitted with other types of safety devices. Safety devices shall be installed so that proper operation of equipment is not impaired.

1.7.4 Spare Parts Data

The Contractor shall submit spare parts data for each different item of equipment specified, after approval of detail drawings and not later than two (2) months prior to the date of beneficial occupancy. The data shall include a complete list of parts and supplies, with current unit prices and source of supply, a recommended spare parts list for 1 year of operation, and a list of the parts recommended by the manufacturer to be replaced on a routine basis.

1.7.5 Detail Drawings

1.7.5.1 Fueling System

The Contractor shall submit detail drawings containing the following:

a. Complete piping and wiring drawings and schematic diagrams of the overall system.

b. Equipment layout and anchorage.

c. Clearances required for maintenance and operation.

d. Any other details required to demonstrate that the system has been coordinated and will properly function as a unit.

1.7.5.2 Monitoring Systems

The Contractor shall submit detail drawings containing the following:

a. An overview drawing which details the leak detection system operation.

b. An overview drawing which details the liquid level and setpoint monitoring.

c. Wiring schematics for each part of the fueling system. The schematics shall indicate each operating device along with their normal ranges of operating values (including pressures, temperatures, voltages, currents, speeds, etc.).

d. Single line diagrams of the system.

e. Panel layout along with panel mounting and support details.

PART 2 PRODUCTS

2.1 STANDARD PRODUCTS

Materials and equipment shall be standard products of a manufacturer regularly engaged in the manufacturing of such products, which are of a similar material, design and workmanship. The standard products shall have been in satisfactory commercial or industrial use for 2 years prior to bid opening. The 2 year use shall include applications of equipment and materials under similar circumstances and of similar size. The 2 years experience shall be satisfactorily completed by a product which has been sold or is offered for sale on the commercial market through advertisements, manufacturer's catalogs, or brochures. Products having less than a 2 year field service record will be acceptable if a certified record of satisfactory field operation, for not less than 6000 hours exclusive of the manufacturer's factory tests, can be shown. Products shall be supported by a service organization. System components shall be environmentally suitable for the indicated locations. The completed installation shall conform to the applicable requirements of NFPA 30 or NFPA 30A, as applicable.

2.2 NAMEPLATES

Parts and equipment specified herein shall have an attached nameplate to list the manufacturer's name, address, component type or style, model or serial number, catalog number, capacity or size, and the system which is controlled. Plates shall be durable and legible throughout equipment life and made of stainless steel. Plates shall be fixed in prominent locations with nonferrous screws or bolts.

2.3 ELECTRICAL WORK

Electrical equipment, motors, and wiring shall be in accordance with Section 16402 INTERIOR DISTRIBUTION SYSTEM. Electrical bonding of materials shall be performed in accordance with NFPA 70.

2.4 MATERIALS IN CONTACT WITH FUEL

Galvanized materials (zinc coated) shall not be allowed in direct contact with any fuel.

2.5 ABOVEGROUND STORAGE TANK

2.5.1 Skid-Mounted Tank

Tank shall be constructed of single wall steel in accordance with NFPA 30, NFPA 30A, and UL 142. Tank shall be designed and manufactured for horizontal installation. Tank shall be mounted on the tank manufacturer's standard support skid. Skid shall span the entire length of the tank and shall separate the tank from the reinforced concrete slab by a minimum of 200 mm.

2.5.2 Secondarily Contained (Open-Top) Tank

Tank system shall include a primary storage tank and an integral open-top secondary containment reservoir. Tank system shall be in accordance with NFPA 30 and NFPA 30A. Tank system shall be designed and manufactured for

horizontal installation. Primary storage tank shall be constructed of single wall steel in accordance with UL 142. Containment reservoir shall be constructed of single-wall steel conforming to STI F911. The volume of the containment reservoir shall be greater than or equal to 110 percent of the primary tank volume. The primary storage tank shall be supported within the containment reservoir with steel tank saddles, or other similar supports, fabricated and attached by the tank manufacturer. The secondary containment reservoir shall be designed to minimize entry of rain water or blowing debris. Containment reservoir shall be equipped with a 75 mm drain that includes a full line size carbon steel drainage line and a full line size plug valve. Tank system shall be skid mounted and provided with lifting lugs which allow tank relocation.

2.5.3 Tank Exterior Protective Coating

Tank exterior protective coating shall be the manufacturer's standard except as modified herein.

2.5.4 Tank Interior Protective Coating

Tank shall be provided with an interior protective coating in accordance with API Std 1631 from the tank bottom up to 1 m off the bottom.

2.5.5 Tank Manway

Tank manway shall be provided with a manway cover and an interior tank ladder. Tank manway shall have an internal diameter of 915 mm. Tank manway shall be provided with a matching flanged watertight manway cover. Manway covers shall be constructed of cast steel in accordance with ASTM A 27/A 27M, grade 60-30 as a minimum. Manhole covers shall be for nontraffic. Pipe connections to a tank through a manway cover shall be through welded-in-place double tappered NPT couplings. Interior tank ladder shall be constructed of either fiberglass or steel. If steel, the ladder shall be completely coated in the same fashion as the interior tank bottom coating. The two stringers shall be a minimum 10 mm thick and a minimum 50 mm wide. The rungs shall be a minimum 19 mm rod on 300 mm centers. Members of the ladder shall be securely affixed. Ladder shall be of sufficient length to extend from the bottom of the tank to the top surface of the tank. Ladder shall be rigidly connected to the tank bottom in accordance with the tank manufacturer's standard. Ladder shall be connected to the top of the tank with pipe guides or slip bars to accommodate expansion of the two stringers.

2.5.6 Tank Piping Penetrations

The number and size of tank piping penetrations shall be provided as indicated. Nylon dielectric bushings shall be provided on all pipe connections to a tank. Pipe connections to a tank shall be through welded-in-place double tappered NPT couplings. The termination of fill lines within a tank shall be provided with an antisplash deflector. Tank suction line shall be provided with a footvalve to prevent line drainage.

2.5.7 Tank Cleanout and Gauge Connection

Tank shall be provided with a combination cleanout and gauge connection. The connection shall consist of a 50 mm pipe extending downward through the top of the tank to within 75 mm of the tank bottom. The entire length of pipe inside the tank shall be provided with 13 mm wide by 300 mm long slots at alternate locations. The top of the pipe shall be provided with a

bronze top-seal type adapter with a corresponding locking type cap. Tank shall have an interior striker/impact plate attached directly under the cleanout and gauge connection. The striker/impact plate shall be a minimum of 6 mm in thickness, be larger in diameter than the tank penetration, and fit the curvature of the tank bottom.

2.5.8 Tank Atmospheric Venting

Vent pipe shall be in accordance with NFPA 30, NFPA 30A, and UL 142. Vent pipe sizing shall be as indicated.

2.5.9 Tank Emergency Venting

Vent shall be the emergency venting, tank manway type designed to relieve at a 13.8 kPa pressure. Vent shall comply with NFPA 30. Each manway shall have a watertight, self-closing type manway cover.

2.5.10 Tank Overfill Alarm System

Tank shall be provided with an overfill alarm system. The system shall include a mechanically-actuated float actuator and an alarm panel. The float actuator shall be field adjustable. The alarm panel shall include an alarm light, an audible alarm, and reset capabilities. The alarm panel shall be mounted adjacent to the tank as indicated. The alarm panel shall initiate a minimum 70 decibel audible alarm when the liquid level within a tank reaches the 90 percent full level. The alarm system shall conform to the requirements of paragraph MONITORING SYSTEM.

2.6 TANK GAUGES

2.6.1 Stick Gauge

Tank shall be provided with 2 stick gauges graduated in m and mm. Stick gauge shall be of wood and treated after graduating to prevent swelling or damage from the fuel being stored.

2.6.2 Tank Calibration Charts

Tank shall be furnished with 2 copies of calibrated charts which indicate the liquid contents in L for each 3 mm of tank depth.

2.6.3 Analog Tank Gauge

Each storage tank shall be provided with an automatic analog reading gauge which is directly mounted to a tank's manway cover. Gauge shall be a level sensing, mechanically actuated device which provides the necessary readout in a sealed glass cap contained in a gauge box. Gauge shall be accurate to plus or minus 6 mm and be capable of measuring the liquid level over the full range of a tank's height. Gauge shall have vapor tight seals to prevent condensate from fogging the viewing glass.

2.6.4 Digital Tank Gauge System

Gauge shall be mechanically or electronically actuated and include a sending unit that transmits a digital signal to a liquid level electronic panel. The electronic panel shall be capable of providing a liquid level readout for each tank in terms of mm and L. Gauge shall be accurate to plus or minus 2 mm and be capable of measuring a tank's liquid level over a tank's full usable liquid level range. Gauge construction shall be

compatible with the fuel to be handled. Gauge shall be capable of measuring water accumulation in mmfrom 19 to 125 mm off the bottom of a storage tank. Gauge shall be capable of constantly sensing the fuel level in a storage tank as well as acknowledging 2 programmable liquid level setpoints. The electronic panel shall activate an audible and visual alarm when each setpoint is monitored. The 2 liquid level setpoints to be monitored shall include a tank's 90 percent liquid level (Setpoint 1) and a tank's 95 percent liquid level (Setpoint 2). The panel shall have a means of delineating between the individual setpoints and the individual tanks.

2.7 ADAPTERS AND COUPLERS

2.7.1 Tight-Fit Vapor Recovery Adapter

Adapter is applicable for gasoline, not diesel or #2 fuel.Adapter shall be bronze and be fitted with a Buna-N or Viton gasket. Adapter shall be the API standard 100 mm size. Adapter shall provide a tight-fit connection to prevent vapor emissions during filling. Adapter shall have an internal spring loaded poppet which prevents vapor emissions from the storage tank when the locking cap is removed. The poppet shall open immediately during tank fill. The poppet shall operate at a lower pressure/vacuum than the tank's pressure/vacuum relief vent in order for vapors to return to the delivery truck instead of exiting through the vent piping. The poppet, the poppet stem, and the poppet spring shall be stainless steel. The adapter shall be provided with a locking cap. The cap shall mate with the adapter and have a latching mechanism which provides a water tight seal. The cap shall provide some type of locking provision and be easily attachable and removable. The cap shall be attached to the tight-fit vapor recovery adapter by a 300 mmsection of brass cable or fuel resistant rope.

2.7.2 Dry-Break Coupler

Coupler shall be an API standard and provide a tight-fit connection to prevent vapor emissions during fuel transfer. Coupler shall be compatible with the fuel product being handled and be a female connection. Seals within the coupler shall be Buna-N or Viton. Coupler shall have an internal manually operated shutoff valve. The valve shall have an external operating handle with the valve's position (open or close) clearly labeled. The internal valve shall not be capable of being manually opened unless the coupler is properly connected to a tank truck's tight-fit adapter.

2.8 PUMPS

Pump shall conform to API Std 610, except as modified herein. Mechanical seals within the pump shall be Buna-N or Viton. Pump casing, bearing housing, and impellor shall be close grained cast iron. Pump shaft shall be stainless steel ASTM A 276 Type 410 or 416. Pump baseplate shall be of cast iron construction. Internal pump components in direct contact with the fuel to be handled shall be of compatible construction. Pump assembly shall be statically and dynamically balanced for all flow rates from no flow to 120 percent of design flow. Pump bearings shall be selected to give a minimum L-10 rating life of 25,000 hours in continuous operation. Pump shall be driven by an explosion-proof motor for Class I, Division 1, Group D hazardous locations as defined in NFPA 70. Pump shall be accessible for servicing without disturbing connecting piping. Pump control panel shall include on and off indication lights for each pump. The panel shall contain an adjustable control logic for pump operation in accordance with the indicated operation. The panel shall also have a manual override switch for each pump to allow for the activation or

deactivation of each pump. Panel, except as modified herein, shall be in accordance with Section 16402 INTERIOR DISTRIBUTION SYSTEM.

2.8.1 In-Line Centrifugal Pump

Pump shall be the in-line, split-case, double suction, single stage, self-priming, centrifugal type. Pump motor shall be mounted horizontal to the pump housing and be provided with flanged end connections.

2.8.2 Submersible Pump

Pump shall be a multi-stage vertical pump and extend inside the tank to within 150 mm of the striker/impact plate. Pump and motor combination shall operate totally submerged in the product of the storage tank. Pump fuel inlets shall be horizontal. Pump, motor, and column pipe assemble shall mount through a NPT pipe penetration in a tank's manway cover. Pump mounting shall completely support both the weight and vibration of the pump. The unit shall be provided with a steel lifting lug capable of supporting the weight of the entire pump and motor assembly. Pump shall include a vertical solid shaft motor, base mounting flange, horizontal pump discharge, low net positive suction head (NPSH) first stage impellers, dynamic and thrust balancing of impellers, and a stainless steel one piece pump shaft. Pump shall be provided with flanged end piping connections.

2.9 SUPPLEMENTAL COMPONENTS

2.9.1 Earthwork

Excavation and backfilling for tanks and piping shall be as specified in Section 02316 EXCAVATION, TRENCHING AND BACKFILLING FOR UTILITY SYSTEM, except as modified herein. Backfill for FRP tanks and pipe shall be pea gravel or crushed stone. Backfill for steel tanks and pipe, aluminum pipe, and stainless steel pipe shall be pea gravel, crushed stone, or sand.

2.9.1.1 Pea Gravel

Pea gravel shall be between 3 and 19 mm diameter.

2.9.1.2 Crushed Stone

Crushed stone shall be between 3 and 13 mm in diameter in accordance with ASTM C 33.

2.9.1.3 Sand

Sand shall be fine sand aggregate in accordance with ASTM C 33, washed and thoroughly dried, contain no more than 500 PPM chlorides, contain no more than 500 PPM sulfates, and have a pH greater than 7.

2.9.2 Piping Containment Sump

Sump shall be constructed of fiberglass reinforced plastic and be chemically compatible with the fuels to be handled. Sump shall not be connected in any way to the street manway cover or concrete above. The top of a containment sump shall be capped with a friction fit access cover. Cover shall be constructed of the same material as the sump. Cover shall have a minimum diameter of 550 mm. Cover shall be easily removable through the street manway above. Rainfall drainage from the street manhole above shall not drain into a sump. Sump shall be capable of withstanding

underground burial loads to be encountered. The sides of a containment sump shall allow the penetration of carrier pipes, exterior containment pipes, conduits, and vapor pipes as required. Penetrations in the containment sump sides shall be booted or sealed to ensure that liquid will not escape from the sump in the event that the liquid level within the sump rises above the pipe penetration. Boots and seals used shall be compatible with the fuel to be handled. Boots and seals shall be water resistant to the influx of ground water. Boots and seals shall be designed and installed to accommodate the anticipated amount of thermal expansion and contraction in the piping system.

2.9.3 Electrically Isolating Flanges

Flanges shall be provided with an electrical insulating material of 1000 ohms minimum resistance conforming to ASTM D 229. The material shall be resistant to the effects of the type of fuel to be handled. Gaskets shall be full face and be provided between flanges. Flanges shall have full surface 0.75 mm thick, spiral-wound mylar insulating sleeves between the bolts and the holes in the flanges. Bolts may have reduced shanks of a diameter not less than the diameter at the root of the threads. High-strength 3 mm thick phenolic insulating washers shall be provided next to the flanges with flat circular stainless steel washers over the insulating washers. Bolts shall be long enough to compensate for the insulating gaskets and stainless steel washers.

2.9.4 Electrically Isolating Union

Union shall be provided with an electrical insulating material of 1000 ohms minimum resistance conforming to ASTM D 229. The material shall be resistant to the effects of the type of fuel to be handled.

2.9.5 Concrete Anchor Bolts

Concrete anchor bolts shall be group II, Type A, class 2 in accordance with ASTM A 307.

2.9.6 Bolts

Bolts shall be in accordance with ASTM A 193/A 193M, Grade B8.

2.9.7 Nuts

Nuts shall be in accordance with ASTM A 194/A 194M, Grade 8.

2.9.8 Washers

Washers shall be in accordance with ASTM F 436M, flat circular stainless steel. Washers shall be provided under each bolt head and nut.

2.9.9 Exterior Coating of Miscellaneous Items

Steel surfaces to be externally coated or painted shall be cleaned to a commercial grade blast cleaning finish in accordance with SSPC SP 6 prior to the application of the coating. Exterior surfaces, other than stainless steel pipe and flexible connectors, which are not otherwise painted and do not require the application of an exterior coating, as well as all items supplied without factory-applied finish paint, not including primer only items, shall be painted as specified in Section 09900 PAINTS AND COATINGS.

2.9.10 Buried Utility Tape

Detectable aluminum foil plastic-backed tape or detectable magnetic plastic tape shall be provided for warning and identification of buried piping. Tape shall be detectable by an electronic detection instrument. Tape shall be provided in minimum 75 mm width rolls, color coded for the utility involved, with warning identification imprinted in bold black letters continuously and repeatedly over entire tape length. Permanent code and letter coloring shall be used which is unaffected by moisture and other substances contained in trench backfill material.

2.10 BULK FUELING

2.10.1 Filter-Separator Unit

Unit shall be tested and qualified in accordance with the performance requirements of API Spec 1581, Group II, Class B except as modified herein.

2.10.1.1 Housing Vessel

Unit shall be fabricated from carbon steel or aluminium and be internally coated. Unit shall be constructed and labeled in accordance with ASME BPVC SEC VIII D1. The housing shall be designed for a working pressure of 1030 kPa. Unit shall be horizontal, end-opening type with coalescers and separators mounted side-by-side (coalescers at the bottom of the vessel and separators at the top). The head opening shall be equipped with a hinged or pivoting device to facilitate swinging the head to one side for servicing. The hinges or pivots shall support the head during servicing without distortion or misalignment. Swing-type bolts shall be used on main closures. Unit shall be provided with 75 mm inside diameter lifting eyes spaced to support the entire weight of the unit. The housing shall be provided with a 19 mm inlet compartment fuel drain plug. A hand hole access plate shall be provided in the inlet compartment. Gaskets and O-ring shall be Buna-N or Viton construction. Threaded base mounting adapters shall be provided for the coalescers. The separators shall be mounted on adapters with blunted "Vee" type knife edges.

2.10.1.2 Legs

Unit shall be provided with 4 each 75 x 75 x 6 mm angle-shaped legs welded to the housing. Each leg shall be fitted with a 100 x 100 x 13 mm base plate.

2.10.1.3 Inlet and Outlet Connections

The inlet and outlet connections shall be as indicated and be located parallel to each other as indicated. Both inlet and outlet shall be flanged end connections.

2.10.1.4 Manual Drain Valve

Unit shall be equipped with a 19 mm stainless steel manual ball valve on a water and fuel drain line. The valve shall allow the drainage of water, fuel, and sediment from the unit by gravity.

2.10.1.5 Sight Gauge

Unit shall be provided with a 13 mm clear liquid level gauge for observing the water accumulation in the sump. The gauge shall be equipped with

nickel-copper alloy ball checks in both the upper and lower fittings, an upper and lower shutoff valve, and a bottom blowoff cock. The gauge shall contain a colored density sensitive ball.

2.10.1.6 Automatic Air Eliminator and Pressure Relief Valve

Unit shall be provided with an angle pattern pressure relief valve on top of the unit to assure the design working pressure of the unit is never exceeded. An automatic air eliminator shall be installed on top of the unit to vent trapped air from within the vessel. The air eliminator shall release at pressures up to 1030 kPa with no fuel leakage. The air eliminator shall be provided with a nonreturn check valve feature, opening pressure of 7 kPa, to prevent air from being drawn into the unit via the air eliminator.

2.10.1.7 Sampling Connections

Sampling connections shall be provided at the inlet and outlet connections to the housing. Each sampling connection shall consist of a 6 mm sampling probe where the probe faces upstream; a ball valve; a quick disconnect coupling; and an aluminum dust cap. The sampling connections shall be capable of accepting a sampling kit for drawing the samples required to assure fuel quality.

2.10.1.8 Spider Assembly

Unit shall be provided with a spider assembly to hold the coalescers and separators in position and to support against vibration. The method of stabilization shall assure an electrical bond between the spider and the vessel.

2.10.1.9 Coalescer and Separator Cartridges

Unit shall be provided with coalescers and separators that have been qualified to the performance requirements of API Spec 1581, Group II, Class B. Separators shall be 200 mesh stainless steel and be coated on both sides with teflon. Coalescers shall have a minimum capacity of 5.7 mL/s per mm of length, and separators shall have a minimum capacity of 21.0 mL/s per mm of length.

2.10.1.10 Differential Pressure Gauge

The unit housing shall be equipped with a direct-reading, piston type differential pressure gauge that measures the differential pressure across both coalescers and separators. The gauge shall consist of a spring-supported, corrosion resistant piston moving inside a glass cylinder. The cylinder shall have stainless steel end flanges with Viton O-ring seals. The high pressure inlet of the gauge shall have a 0.01 mm pleated paper filter and the low pressure connection shall have a fine mesh stainless steel strainer. The gauge shall have an operating pressure of 2070 kPa with a cylinder burst pressure of not less than 8270 kPa. Differential pressure range of the gauge through approximately 75 mm of piston movement shall be 0-210 kPa with an accuracy of plus or minus 3.5 kPa, calibrated linearly with 7 kPa scale graduations. High and low pressure connections shall be 6 mm NPT female with a stainless steel bar stock valve at each connection. Construction of the gauge shall be such that a 3-valve manifold is not necessary. If only 1 bar stock valve is closed, the gauge shall not be damaged by up to 2070 kPa differential pressure in either direction. The differential pressure gauge shall be attached to the filter

separator by a gauge panel.

2.10.1.11 Filter-Separator Factory Tests

Factory tests shall be performed on a filter separator to demonstrate compliance with the testing and qualification procedures defined in API Spec 1581 for Group II, Class B filter separators. The tests shall be performed in the presence of a Government representative if deemed necessary by the Contracting Officer. The tests shall be on a full-scale test system in accordance API Spec 1581, except as modified herein. The test sample shall consist of a complete filter separator with coalescer and separator elements installed. Elements shall be representative of a production lot. The filter separator, coalescers, and separator screens shall be identified with the manufacturer's part number. Prior to performing Test Series 1, 2, and 3, the filter separator shall be subjected to a hydrostatic pressure of 1900 kPa per the requirements of ASME BPVC SEC VIII D1. The average free water content in a test set shall not exceed 10 parts per million and any single sample shall not exceed 15 parts per million.

2.10.2 System Control Valves

Valves shall be single-seated, diaphragm actuated, pilot-controlled globe valves. Each shutoff valve shall be provided with a position indicator, a pilot circuit strainer, and pressure gauge quick-disconnect fittings located in the valve inlet, outlet, and cover. Service and adjustments to a valve shall be possible without removing the valve from the line. Portions of a valve coming in contact with fuel shall be compatible with the fuel and be of noncorrosive material. Valves shall have bodies, bonnets, and covers constructed of stainless steel conforming to ASTM A 743/A 743M, type 304 or type 316; or aluminum alloy conforming to ASTM B 26/B 26M, types 3003, 6061-T6, or 356-T6. Each valve shall have stainless steel stem and trim. Valves shall be suitable for a working pressure of 1900 kPa at 38 degrees C with a weatherproof housing. Valves shall be provided with flanged end connections unless otherwise indicated. Seats, body seals, and stem seals shall be Viton or Buna-N.

2.10.2.1 Pressure Control Valve

Valve shall be capable of maintaining the downstream flow rate at the indicated pressure. Valve setpoint shall be adjustable within a minimum range of plus or minus 20 percent of the indicated setpoint. Functions shall be externally adjustable. Valve shall be provided with a stainless steel orifice plate integrally mounted at the inlet port of the valve. Stainless steel control piping shall be provided to allow sensing differential pressure across the orifice plate. Valve shall be provided with opening speed controllers which are adjustable from 2 to 30 seconds without affecting the closing of the valve. Speed controllers shall be field adjustable and factory set for 15 seconds.

2.10.2.2 Float-Operated Control Valve

Valve shall be float-operated and normally closed. The valve shall be the on/off type that is fully open at the low set point and fully closed at the high set point. The float and float assembly shall be stainless steel and be compatible with the fuel to be handled. The high/low movement span of the float shall be field adjustable.

2.10.2.3 Relief Valve

Valve shall be hydraulically operated and normally closed. Valve shall be capable of maintaining a constant upstream pressure regardless of the downstream demand. Valve shall have an angle or straight pattern as indicated. Valves shall be factory-set to open at the indicated pressure and be field adjustable. Valve setpoint shall be adjustable within a minimum range of plus or minus 20 percent of the indicated setpoint. Each valve shall be provided with a cast steel sight flow indicator which has flanged end connections. The sight flow indicator shall consist of a housing containing a rotating propeller that is visible through a glass observation port.

2.10.2.4 Filter Separator Control Valve and Float Assembly

Valve shall be float-operated and normally opened. Valve shall be capable of maintaining the downstream flow rate at the indicated pressure. Functions shall be externally adjustable. Valve shall be provided with a stainless steel orifice plate integrally mounted at the inlet port of the valve. Stainless steel control piping shall be provided to allow sensing differential pressure across the orifice plate. Valve shall be provided with a float-operated pilot control assembly. The float and float assembly shall be stainless steel. The movement span of the float shall be field adjustable. The assembly shall be fitted into the filter separator housing sump. The float assembly shall control both the filter separator control valve and the automatic water drain valve. Float shall ride on the fuel-water interface inside the filter separator sump and have 3 stages of operation. The stages of operation include:

(a) Stage I: With the float down, the filter separator control valve shall be open and the automatic water drain valve closed.

(b) Stage II: With the float at the intermediate level, the filter separator control valve shall remain open while the automatic water drain valve opens.

(c) Stage III: With the float at a high level, the filter separator control valve shall close while the automatic water drain valve remains open.

2.10.3 Control Stations

Each tank truck and tank car unloading station shall be provided with a pump control start/stop station, an emergency "stop" pushbutton station, and a grounding unit. Each truck fill stand shall be provided with a pump control start/stop station, an emergency "stop" pushbutton station, a grounding unit, deadman control, and a truck overfill unit. Electrical supply and electrical control equipment shall be suitable for Class I, Division 1, Group D locations, be intrinsically safe, be weather resistant and be in accordance with UL 913, NEMA 250, and NFPA 70. Mounting hardware shall be corrosion resistant.

2.10.3.1 Pump Control Start/Stop Station

Station shall include a start pushbutton, a stop pushbutton, and red and green indicating lights. The sequence of operation for the station shall be as indicated on the drawings. During activation, the start pushbutton shall maintain contact until deactivated by the stop pushbutton. The stop pushbutton shall maintain contact until deactivated by the start pushbutton.

2.10.3.2 Emergency "Stop" Pushbutton Station

Activation of the emergency pushbutton station shall shutdown power to the entire fueling system and send an alarm signal to the fire department as indicated. Station housing shall contain an emergency pushbutton. Pushbutton shall be a single unit with a bright red jumbo mushroom operator with 1-NC and 1-NO contact. During activation, the pushbutton shall maintain contact until deactivated by a key release. A caution sign shall be mounted beside the emergency shutdown station, with red 50 mm letters stating "EMERGENCY SHUTDOWN". The sign shall have a white background and be of noncorrosive construction.

2.11 MONITORING SYSTEM

2.11.1 Belowground Piping System

Belowground piping systems shall be continuously and automatically monitored by electronic capacitance type liquid sensors as indicated. Sensors shall be capable of distinguishing the difference between hydrocarbons and water. Sensors shall be intrinsically safe for use in a class 1, division 1, group D environment as defined by NFPA 70. Sensors shall have a probability of detection of 95 percent and a probability of false alarm of 5 percent. Sensors shall be compatible with the electronic monitoring panel.

2.11.2 Electronic Monitoring Panel

panel shall be tank-mounted and shall be capable of providing an audible and visual alarm in the event of a detected leak. Audible alarms shall be a buzzer sounding at 70 decibels or greater. Each visual alarm shall indicate the type and location of the alarm condition. Visual alarms shall be capable of delineating between individual alarm conditions. Panel shall provide a means of delineating between individual alarm conditions. Panel shall be housed in a NEMA 4 rated enclosure in accordance with NEMA 250. Panel shall have a hinged door to swing left or right (doors shall not swing up or down). Panel using computer memory shall be capable of maintaining current programmable information in the event of a power failure. Panel shall be provided with a manual acknowledge switch which shall be capable of deactivating the audible alarm. The acknowledge switch shall not be capable of deactivating subsequent audible alarms unless depressed manually again for each occurrence. Under no circumstance shall this acknowledgement switch extinguish the visual alarms until the alarm condition has been corrected. Switches shall be an integral component located on the front panel and be either a key switch or push button.

2.12 PIPING COMPONENTS

2.12.1 Product Piping

Piping routinely carrying fuel shall be steel as defined herein.

2.12.2 Secondary Containment Piping

Belowground piping carrying fuel shall be secondarily contained, unless otherwise indicated. Piping system shall be of double-wall construction with the internal pipe being the product pipe and the exterior pipe being an fiberglass reinforced plastic containment pipe as defined herein. Piping system shall be a factory manufactured piping system designed in

accordance with ASME B31.3 and NFPA 30. The containment piping shall allow for complete inspection of the product piping before the containment piping is sealed. Containment piping shall be chemically compatible with the type of fuel to be handled. Containment piping shall be non-corrosive, dielectric, non-biodegradable, and resistant to attack from microbial growth. Containment piping shall be capable of withstanding a minimum 35 kPa air pressure. Containment piping shall be evenly separated from the primary pipe using pipe supports which are designed based on pipe size, pipe and fuel weight, and operating conditions. The supports shall be constructed of the same material as the primary pipe and shall be designed so that no point loading occurs on the primary or exterior pipe. Supports shall be permanently attached to the product pipe either by tack welding or by an adhesive. The exterior piping and supports shall allow for normal draining as well as the installation of any necessary leak detection equipment or cables. Supports shall be designed and installed to allow for pipe movement of both the product piping and the exterior piping without causing damage to either. Containment piping shall be capable of withstanding H-20 highway loading as defined by AASHTO HB-17.

2.12.3 Vent and Vapor Recovery Piping

Piping shall be single wall steel as defined herein.

2.12.4 Steel Pipe

Carbon steel pipe shall be in accordance with ASTM A 53/A 53M, Type E or S, Grade B, or API Spec 5L, seamless or electric-weld, Grade B. Pipe smaller than 65 mm shall be Schedule 80. ASTM A 53/A 53M pipe 65 mm and larger shall be Schedule 40. API Spec 5L pipe 65 mm and larger shall be Schedule 40S.

2.12.4.1 Connections for Steel Pipe

Connections for pipe or fittings smaller than 65 mm shall be forged, socket weld type, 2000 W.O.G. conforming to ASTM A 182/A 182M and ASME B16.11. Connections for pipe or fittings 65 mm and larger shall be butt weld type conforming to ASTM A 234/A 234M, Grade WPB and ASME B16.9 of the same wall thickness as the adjoining pipe. Piping in inaccessible locations, such as product piping inside of containment piping, shall be welded.

2.12.4.2 Welding Electrodes

Welding electrodes shall be E70XX low hydrogen type conforming to AWS A5.1/A5.1M or AWS A5.4/A5.4M.

2.12.5 Fiberglass Reinforced Plastic (FRP) Pipe

2.12.5.1 Pipe

Pipe shall be compatible with the fuel to be handled and be in accordance with ASTM D 5677. Pipe shall be compatible with the fluid being transported. Use of FPR piping is limited to buried service only and at pressures not exceeding that marked on the pipe.

2.12.5.2 Fittings

Fittings and joining materials shall be in accordance with ASTM D 5677. Threaded fittings shall not be used for product piping in inaccessible locations. Fittings for secondary exterior pipe of double-wall piping

system shall accommodate the primary inner pipe and any additional equipment required, such as leak detection cables. Fittings and joining materials shall be compatible with the fuel to be handled.

2.12.6 Valves

Portions of a valve coming in contact with fuel shall be compatible with the fuel to be handled. Valves shall have bodies, bonnets, and covers constructed of cast steel conforming to ASTM A 216/A 216M, Grade WCB. Each valve shall have stainless steel stem and trim. Valves shall be suitable for a working pressure of 1900 kPa at 38 degrees C with a weatherproof housing and be provided with flanged end connections unless indicated otherwise. Seats, body seals, and stem seals shall be Viton or Buna-N.

2.12.6.1 Gate

Valve shall be in accordance with API Spec 6D and conform to the fire test requirements of API Spec 6FA Valve shall be of the flexible wedge disc type, conduit disc type, or double disc type. Valve shall be of the rising stem type with closed yoke, or the non-rising stem type equipped with a device to give positive visual indication of the valve's position.

2.12.6.2 Swing Type Check

Valve shall be swing type conforming to API Spec 6D regular type. Check valves shall be the tilting disc, non-slam type. Discs and seating rings shall be renewable without removing from the line. The disc shall be guided and controlled to contact the entire seating surface.

2.12.6.3 Wafer Type Check

Valves shall conform to API Spec 6D and API Std 594. Wafer type check valves may be provided in lieu of swing check valves in piping sizes larger than 100 mm.

2.12.6.4 Ball

Valves 50 mm and larger shall conform to API Spec 6D. Valves smaller than 50 mm shall have one piece bodies and have a minimum bore not less than 55 percent of the internal cross sectional area of a pipe of the same nominal diameter. The ball shall be stainless steel. Valve shall be fire tested and qualified in accordance with API Spec 6FA or API Std 607. Valve shall be non-lubricated and operate from fully open to fully closed with 90 degree rotation of the ball.

2.12.6.5 Plug

Valve shall be in accordance with API Spec 6D. Valve shall be non-lubricated, resilient, double seated, trunnion mounted type with a tapered lift plug capable of 2-way shutoff. Valve shall operate from fully open to fully closed by rotation of the handwheel to lift and turn the plug. Valve shall have weatherproof operators with mechanical position indicators.

2.12.6.6 Globe

Valve shall conform to ASME B16.34.

2.12.6.7 Pressure\Vacuum Vent Relief

Valve pressure and vacuum capacities shall be in accordance with NFPA 30. Valve shall be factory set for 5.2 kPa pressure and 215 Pa vacuum. Pressure and vacuum relief shall be provided by a single valve. Valve shall be constructed of cast steel or aluminum with flanged or threaded end connections. Trim shall be stainless steel. Inner valve pallet assemblies shall have a knife-edged drip ring around the periphery of the pallet to preclude condensation collection at the seats. Pallet seat inserts shall be of a material compatible with the fuel specified to be stored.

2.12.7 Accessories

2.12.7.1 Foot Valve

Foot valve shall be compatible with the fuel to be handled and with the working pressure of the system. Foot valve shall be the double-poppet design. Foot valve shall be provided with a minimum 20 mesh screen on the intake. Foot valve seats shall be the replaceable type. Foot valve shall be capable of passing through a 75 mm pipe or tank flange.

2.12.7.2 Flanges

Flanges installed on equipment, fittings, or pipe shall be Class 150 pound flanges which are rated in accordance with ASME B16.5. Flanges shall be the 1.6 mm raised face type, except for connections to FRP pipe. Connections to FRP pipe shall be made with flat face flanges. Stainless steel flanges shall conform to ASTM A 182/A 182M. Aluminum flanges shall conform to ASTM A 182/A 182M, alloy 6061-T6 or alloy 356-T6. Carbon steel flanges shall conform to ASTM A 181/A 181M, Grade 2.

2.12.7.3 Flange Gaskets

Flange gaskets shall be 2 mm thick, NBR, and be in accordance with ASME B16.21. Full-face gaskets shall be provided for flat-face flanged pipe joints. Ring gaskets shall be provided for raised-face flanged pipe joints.

2.12.7.4 Steel Coupling

Coupling shall be in accordance with API Spec 5L, seamless, extra heavy, wrought steel with recessed ends.

2.12.7.5 Welded Nipple

Nipple shall be in accordance with ASTM A 733 or ASTM B 687 and of the same material as the product piping.

2.12.7.6 Threaded Union

Threaded unions shall only be used on cast steel piping 50 mm in nominal size or smaller and only where indicated. Union shall be in accordance with ASME B16.39, Class 150.

2.12.7.7 Joint Compound

Joint compounds for any type of piping system shall be resistant to water and suitable for use with fuel containing 40 percent aromatics.

2.12.7.8 Flexible Connector

Connectors shall conform to requirements of UL 567 and be the flexible metal hose, corrugated type with braided wire sheath covering. Connectors shall have close-pitch annular corrugations and be rated for a working pressure of at least 1900 kPa at 38 degrees C. Connectors shall have a minimum 300 mm live length with flanged end connections. Metal for hose and braided wire sheath shall be stainless steel in accordance with ASTM A 167.

2.12.7.9 Strainer

Strainer shall be in accordance with ASTM F 1199 or ASTM F 1200, except as modified herein. Strainer shall be the cleanable, basket or "Y" type, and be the same size as the pipeline. Strainer body shall be fabricated of cast steel or brass with the bottom drilled and tapped. The body shall have arrows clearly cast on the sides indicating the direction of flow. Strainer shall be equipped with a removable cover and sediment screen. Strainer screen shall be wire screen constructed of brass sheet, Type 316 stainless steel, with small perforations numbering not less than 60 per square centimeter to provide a net free area through the basket of at least 3.3 times that of the entering pipe. Flow shall be into the screen and out through the perforations.

2.12.7.10 Pipe Hangers and Supports

Hangers and supports shall be of the adjustable type and conform to MSS SP-58 and MSS SP-69, except as modified herein. The finish of rods, nuts, bolts, washers, hangers, and supports shall be hot-dipped galvanized. Nuts, bolts, washers, and screws shall be Type 316 stainless steel when located under any pier. Miscellaneous metal shall be in accordance with ASTM A 36/A 36M, standard mill finished structural steel shapes, hot-dipped galvanized.

a. Pipe Protection Shields. Shields shall conform to MSS SP-58 and MSS SP-69, Type 40, except material shall be Type 316 stainless steel. Shields shall be provided at each slide type pipe hanger and support.

b. Low Friction Supports. Supports shall have self-lubricating anti-friction bearing elements composed of 100 percent virgin tetrafluoroethylene polymer and reinforcing aggregates, prebonded to appropriate backing steel members. The coefficient of static friction between bearing elements shall be 0.06 from initial installation for both vertical and horizontal loads and deformation shall not exceed 0.05 mm under allowable static loads. Bonds between material and steel shall be heat cured, high temperature epoxy. Design pipe hangers and support elements for the loads applied. Anti-friction material shall be a minimum of 2.3 mm thick. Steel supports shall be hot-dipped galvanized. Units shall be factory designed and manufactured.

2.12.7.11 Exterior Coatings for Belowground Steel Piping

Piping placed in direct contact with backfill or soil shall be provided with an exterior protective coating.

a. Pipe: Pipe shall receive protective coating system of factory-applied adhesive undercoat and continually extruded

polyethylene coating conforming to NACE RP0185, Type A. The protective coating shall have a minimum thickness of 0.76 mm (30 mils) .

b. Fittings and Other Surfaces: Fittings, couplings, regular surfaces, damaged areas of extruded polyethylene coating and existing piping affected by the Contractor's operations shall be protected by the application of polyethylene tape which conforms to NACE RP0169, 0.76 mm nominal thickness. Surfaces to be tape wrapped shall be clean, dry, grease free, and primed with a compatible primer prior to application of tape. Primer shall be as recommended by the tape manufacturer and approved by the pipe coating manufacturer. Heat shrink sleeves may be provided in lieu of tape and shall overlap the pipe coating not less than 150 mm.

c. Irregular Surfaces: Irregular surfaces shall be protected with a cold-applied liquid primer and heated coal-tar tape in accordance with AWWA C203.

2.12.7.12 Exterior Coating for Aboveground Steel Piping

Aboveground steel piping shall be painted as specified in Section 09900 PAINTS AND COATINGS. Paint shall be rated for use on hot metal surfaces up to 230 degrees C and for surfaces exposed to the weather. Color of the finish coat shall be selected by the Contracting Officer.

2.12.7.13 Pressure Gauge

Gauge shall conform to ASME B40.100. Gauge shall be single style pressure gauge for fuel with 115 mm dial, have brass or aluminum case, bronze tube, stainless steel ball valve, pressure snubbers, and scale range for the intended service.

PART 3 EXECUTION

3.1 INSTALLATION

Storage tanks shall be handled with extreme care to prevent damage during placement and shall be installed in accordance with the manufacturer's installation instructions and NFPA 30 or NFPA 30A, as applicable. The exterior surface of each tank shall be inspected for obvious visual damage prior to and proceeding the placement of each storage tank. Surface damage to a storage tank shall be corrected according manufacturer's requirements before proceeding with the system installation.

3.1.1 Steel Tank Handling

Storing, handling, and placing of coated steel tanks shall be done with care and in a manner that will minimize damage to the coating and will not reduce its protective value. A coated tank shall be placed in position carefully and with a minimum of handling. Coating damage shall be repaired and tested as previously specified before backfilling.

3.1.2 Steel Tank Installation Procedures

Tank shall be anchored to a reinforced concrete anchor pad as indicated through the use of manufacturer's supplied holddown straps. Tank shall be separated from an anchor pad by a minimum of 300 mm of backfill material. Metal straps, turnbuckles, anchors, and accessories shall be coated to

resist corrosion. Holiday testing of protective coatings for steel tanks shall be successfully completed prior to any backfilling, strapping, or piping connections to the tank. Backfill material shall be uniformly placed around the entire tank and extend to grade level. Tank anodes shall be inspected to ensure integrity during backfill operations.

3.1.3 Equipment

Equipment shall be properly leveled, aligned, and secured in place in accordance with manufacturer's instructions. Supports shall be provided for equipment, appurtenances, and pipe as required. Floor-mounted pumps shall be provided with mechanical vibration isolators or a vibration isolation foundation. Anchors, bolts, nuts, washers, and screws shall be installed where required for securing the work in place. Sizes, types, and spacings of anchors and bolts not indicated or specified shall be as required for proper installation. Each dispenser and dispenser sump shall be installed in accordance with manufacturers' instructions. Dispensing units shall be isolated from the piping during flushing and cleaning operations.

3.1.4 Piping

Piping shall be inspected, tested, and approved before burying, covering, or concealing. Piping shall be installed straight and true to bear evenly on supports. Piping shall be free of traps, shall not be embedded in concrete pavement, and shall drain toward the corresponding storage tank. Any pipe, fittings, or appurtenances found defective after installation shall be replaced. Piping connections to equipment shall be as indicated or as required by the equipment manufacturer. Pipe and accessories shall be handled carefully to assure a sound, undamaged condition. The interior of the pipe shall be thoroughly cleaned of foreign matter and shall be kept clean during installation. The pipe shall not be laid in water or stored outside unprotected when weather conditions are unsuitable. When work is not in progress, open ends of pipe and fittings shall be securely closed so that water, earth, or other substances cannot enter the pipe or fittings. Cutting pipe, when necessary, shall be done without damage to the pipe. Pipe shall be reamed to true internal diameter after cutting to remove burrs. Changes in pipe sizes shall be made through tapered reducing pipe fittings. Stainless steel pipe shall in no case be welded directly to carbon steel pipe. Cutting of FRP pipe shall be performed with a hacksaw or circular saw. Fuel supply piping from a storage tank shall extend to within 150 mm of the tank's bottom.

3.1.4.1 Aboveground Piping

Pipe sections shall be installed as indicated and be complete prior to performing any piping tests. FRP shall not be used aboveground.

3.1.4.2 Belowground Piping

Nonmetallic pipe shall be installed in accordance with pipe manufacturer's instructions. Belowground piping shall be laid with a minimum pitch of 25 mm per 6 m. Horizontal sections of pipe shall be installed with a minimum of 450 mm of backfill between the top of the pipe and the ground surface. The full length of each section of belowground pipe shall rest solidly on the pipe bed. Joints in secondary piping shall not be made until inner pipe is successfully pressure tested.

3.1.4.3 Pipe Hangers and Supports

Additional hangers and supports shall be installed for concentrated loads in piping between hangers and supports, such as for valves. Miscellaneous steel shapes as required shall be installed in accordance with ASTM A 36/A 36M. Pipe supports shall be installed in accordance with MSS SP-58and MSS SP-69. Pipe spacing shall be as follows:

Nominal Pipe Size (mm)	25 and Under	40	50	80	100	150	200	250	300
Maximum Hanger Spacing (m)	2.1	2.7	3	3.7	4.3	5.2	5.8	6.7	7.0

3.1.4.4 Pipe Sleeve

Piping passing through concrete or masonry construction shall be fitted with sleeves. Sleeve shall be of sufficient length to pass through the entire thickness of the associated structural member and be large enough to provide a minimum clear distance of 13 mm between the pipe and sleeve. Sleeves through concrete shall be 0.91 mm steel, fiberglass, or other material as approved by the Contracting Officer. Sleeves shall be accurately located on center with the piping and securely fastened in place. The space between a sleeve and a pipe shall be caulked and sealed as specified in Section 07900 JOINT SEALANTS. In fire walls and fire floors, both ends of a pipe sleeve shall be caulked with UL listed fill, void, or cavity material.

3.1.4.5 Pipe Anchor

Where steel piping is to be anchored, the pipe shall be welded to the structural steel member of the anchor and the abraded area shall be patched with protective coating or covering as specified.

3.1.4.6 Exterior Coating for Belowground Steel Pipe

Except as otherwise specified, protective coatings shall be applied mechanically in a factory or field plant especially equipped for the purpose. Valves and fittings that cannot be coated and wrapped mechanically shall have the protective covering applied by hand, preferably at the plant that applies the covering to the pipe. Joints shall be coated and wrapped by hand. Hand coating and wrapping shall be done in a manner and with materials that will produce a covering equal in thickness to that of the covering applied mechanically. Piping installed in valve boxes or manholes shall also receive the specified protective coating.

a. Regular Surfaces, Fittings, and Couplings: Tape shall be initially stretched sufficiently to conform to the surface to which it is applied, using one layer lapped at least 25 mm. Tape shall overlap the extruded polyethylene coated piping 75 mm at all joints. A second layer, lapped at least 25 mm with a tension as it comes off the roll shall be applied and pressed to conform to the shape of the component.

b. Damaged Areas of Extruded Polyethylene Coating: Residual material from coating shall be pressed into the break or trimmed off. Tape shall be applied spirally and one-half lapped as it is applied. Tape shall extend 75 mm beyond the damaged area. A double wrap of one full width of tape shall be applied at right angles to the

pipe axis in a manner to seal each end of the spiral wrapping.

c. Existing Piping Affected by the Contractor's Operation: Pipe shall be wrapped to 75 mm beyond the point of connection.

3.1.5 Buried Utility Tape

Bury tape with the printed side up at a depth of 300 mm below the top surface of earth or the top surface of the subgrade under pavements.

3.1.6 Field Painting

Painting required for surfaces not otherwise specified, and finish painting of items only primed at the factory, shall be painted and have identification markings applied as specified in Section 09900 PAINTS AND COATINGS. Stainless steel and aluminum surfaces shall not be painted. Prior to any painting, surfaces shall be cleaned to remove dust, dirt, rust, oil, and grease.

3.1.7 Framed Instructions

Framed instructions shall include equipment layout, wiring and control diagrams, piping, valves, control sequences, and typed condensed operation instructions. The condensed operation instructions shall include preventative maintenance procedures, methods of checking the system for normal and safe operation, and procedures for safely starting and stopping the system. The framed instructions shall be framed under glass or laminated plastic and be posted where directed by the Contracting Officer. The framed instructions shall be posted before acceptance testing of the system.

3.2 TESTS

3.2.1 Aboveground Storage Tank Tightness Tests

A tightness test shall be performed on each aboveground storage tank. The tests shall be performed prior to making piping connections. Tests shall be capable of detecting a 0.1 mL/s leak rate from any portion of the tank while accounting for effects of thermal expansion or contraction. Gauges used in the tightness tests shall have a scale with a maximum limit of 69 kPa. Each storage tank shall be pressurized with air to 35 kPa and monitored for a drop in pressure over a 2-hour period during which there shall be no drop in pressure in the tank greater than that allowed for pressure variations due to thermal effects. This pressure shall be maintained and soapsuds or equivalent material applied to the exterior of the tank. While applying the soapsuds, the entire tank shall be visually inspected, including the bottom surfaces, for leaks (bubble formations). Leaks discovered during either the 2-hour waiting period or the soapsuds tests shall be repaired in accordance with manufacturer's instructions. The pneumatic test shall be performed again in the event a leak is discovered.

3.2.2 Pneumatic Test

Pneumatically pressurize each storage tank's primary chamber to 35 kPa and monitor for a drop in pressure over a 2-hour period during which there shall be no drop in pressure in the tank greater than that allowed for thermal expansion and contraction. Following the 2-hour period, the pressure from the primary chamber shall then be bled over into the

interstitial space. This pressure shall be maintained and soapsuds or equivalent material applied to the exterior of the tank. While applying the soapsuds, the entire tank shall be visually inspected, including the bottom surfaces, for leaks (bubble formations). Leaks discovered in either the primary chamber or the interstitial space shall be repaired in accordance with manufacturer's instructions. The entire pneumatic test shall be performed again in the event a leak is discovered. Gauges used in pneumatic tests shall have a scale with a maximum limit of 69 kPa.

3.2.3 Manufacturer's Tank Tests

Following the tank tightness test, each storage tank shall be leak tested in accordance with the manufacturer's written test procedure if the manufacturer's test procedure is different from the tightness tests already performed. Any test failure shall require corrective action and retest.

3.2.4 Piping Pneumatic and Hydrostatic Tests

Testing shall comply with the applicable requirements of ASME B31.3, NFPA 30, and the requirements specified herein. Care shall be taken not to exceed pressure rating of various fittings. Hydrostatic testing shall be performed using fuel as the liquid. Water shall not be introduced into the system for testing. To facilitate the pneumatic and hydrostatic tests, various sections of the piping system may be isolated and tested separately. Where such sections terminate at flanged valve points, the line shall be closed by means of blind flanges in lieu of relying on the valve. Tapped flanges shall be provided to allow a direct connection between the piping and the air compressor and/or pressurizing pump. Tapped flanges shall also be used for gauge connections. Taps in the permanent line will not be permitted. Gauges shall be subject to testing and approval. In the event leaks are detected, the pipe shall be repaired and the test repeated. Following satisfactory completion of each pneumatic and hydrostatic test, the pressure shall be relieved and the pipe immediately sealed. Provision shall be made to prevent displacement of the piping during testing. Personnel shall be kept clear of the piping during pneumatic testing. Equipment such as pumps, tanks, and meters shall be isolated from the piping system during the testing.

3.2.4.1 Pneumatic Procedures for Product and Vent\Vapor Piping

Piping to be installed underground shall not receive field applied covering at the joints or be covered by backfill until the piping has passed the pneumatic test described herein. A pneumatic test pressure shall be applied in increments. A preliminary 170 kPa test shall be applied. The pressure shall be maintained while soapsuds or equivalent materials are applied to the exterior of the piping. While applying the soapsuds, the entire run of piping, including the bottom surfaces, shall be visually inspected for leaks (bubble formations). Leaks discovered shall be repaired in accordance with manufacturer's instructions and retested. Following the preliminary test, the piping shall be tested at a pressure of 340 kPa for not less than 2 hours, during which time there shall be no drop in pressure in the pipe greater than that allowed for thermal expansion and contraction. The pressure source shall be disconnected during the final test period. Any leaks revealed by the test shall be repaired and the test repeated.

3.2.4.2 Pneumatic Procedures for Exterior Containment Piping

Exterior containment piping shall undergo a minimum pneumatic pressure of

35 kPa. Pressure in secondary piping shall be maintained for at least 1 hour while soapsuds or equivalent materials are applied to the exterior of the piping. While applying the soapsuds, the entire run of piping, including the bottom surfaces, shall be visually inspected for leaks (bubble formations). Leaks discovered shall be repaired in accordance with manufacturer's instructions and retested. This testing shall be in compliance with the manufacturer's published installation instructions.

3.2.4.3 Hydrostatic Procedures for Product Piping

Upon completion of pneumatic testing and after backfilling, each piping system shall be hydrostatically tested with fuel at not more than 1900 kPa in accordance with ASME B31.3 and API RP 1110, with no leakage or reduction in gauge pressure for 4 hours. The Contractor shall furnish electricity, instruments, connecting devices, and personnel for the test. Fuel will be furnished by the Government. Defects in work performed shall be corrected at the Contractor's expense, and the test repeated until the work is proven to be in compliance with the testing procedures. Any release of fuel (no matter the size) during testing shall be immediately contained, the pressure on the piping relieved, and the piping drained of fuel. The Contracting Officer shall be notified immediately of a fuel release, the exact location, an estimated quantity of release, and a discussion of the containment measures taken.

3.2.5 System Performance Tests

After all components of the system have been properly adjusted, the system shall be tested to demonstrate that the system meets the performance requirements for which it was designed. The maximum rated capacity of the system shall be tested by using several tank trucks simultaneously, if applicable. The use of tank trucks shall be coordinated with the Contracting Officer prior to testing. If any portion of the system or any piece of equipment fails to pass the tests, the Contractor shall make the necessary repairs or adjustments and the test shall be repeated until satisfactory performance is obtained from the Contracting Officer. The tests shall demonstrate the following:

a. The capability of each fuel pump to deliver the indicated flow of fuel.

b. The alarm and control panels are operational and perform as designed.

c. Each fuel meter is operating accurately.

d. Vent piping is clear of debris and each pressure/vacuum relief vent is operating properly.

e. Vapor recovery systems perform as designed.

f. Dispensing units are operational and perform as designed.

g. Truck loading and unloading arm assemblies perform as designed. Each preset type meter, counter and truck fill stand shutoff valve operates as designed.

h. The capability of each emergency stop pushbutton station to shutdown the entire fueling operation.

3.2.6 High Liquid Level Alarm Test

Each storage tank shall be initially overfilled with the appropriate product in order to verify the high liquid level alarms in the remote alarm panel function as designed. The initial overfill shall also verify that the storage tank overfill protection device functions as designed. Tank overfill shall stop immediately once the overfill device operates. The Contractor shall not overfill any storage more than 98 percent level even if the leak detection and liquid level electronic panel and the overfill device do not function as designed. Any problems with the electronic panel or the overfill device shall be corrected and retested. The system shall be drained below the high liquid levels following all tests.

3.3 FLUSHING, CLEANING AND ADJUSTING

Following installation and equipment testing but prior to system performance testing, the following flushing, cleaning, and adjustments shall be performed.

3.3.1 Preparations for Flushing

3.3.1.1 Initial System Cleaning

The interior of each fuel storage tank shall be visually inspected and cleaned free of debris before filling. In the event of entry into a storage tank, the Contractor shall ensure a safe atmosphere exists. Contractor shall remove all preservatives and foreign matter from valves, line strainers, pumps, and other equipment coming in contact with fuel. No fuel will be delivered to the system until the Contractor has satisfactorily completed this initial system cleaning.

3.3.1.2 Protection of Equipment

Temporary 40 mesh cone type strainers shall be installed in the suction line ahead of each fueling pump as well as ahead of each filter/separator. The strainers shall be constructed of the same material as the piping and shall be compatible with the fuel to be handled. The temporary strainers shall remain in place for a minimum of 2 days after system startup, after which time the Contractor shall remove the strainers and prepare the piping as intended for final system operation.

3.3.2 System Flushing

3.3.2.1 Initial Fuel Supply

Following the preparations for flushing, each storage tank shall be filled to a 25 percent capacity with the proper fuel according to the fueling system's final operational requirements. Following the initial fuel supply, each storage tank's fuel temperature and liquid level shall be measured and recorded. The liquid level shall be measured using a manual tank gauge.

3.3.2.2 Disposal of Initial Fuel Supply

In the event the fuel contained in the piping system at the conclusion of the flushing operation is not considered by the Contracting Officer to be of satisfactory quality for the desired use, the Contractor shall be responsible for pumping out the entire fuel supply from the storage tanks and the piping system. The filter/separator and piping system shall be

completely drained to the storage tank. Disposition of the fuel removed from the system shall be the responsibility of the Government.

3.3.3 Cleaning Equipment

Upon completion of flushing operations, permanent strainers shall be removed, cleaned, and reinstalled. If the pressure differential across the filter/separator elements exceeds that recommended by the manufacturer, the elements shall be replaced with the spare set furnished with the unit.

3.3.4 Initial System Adjustments

Following the flushing and cleaning operations, each system component shall be initially adjusted, if necessary, to meet the system's final operational requirements. The Government will deliver enough fuel to the storage tanks to enable the Contractor to make final adjustments to equipment and controls. Flow rates and pressures shall be adjusted as required to meet the indicated requirements. The sequence of control for each component shall be adjusted to meet the indicated system requirements. Following the initial system adjustments, the equipment tests shall be performed in order to determine any necessary final system adjustments.

3.4 DEMONSTRATIONS

Contractor shall conduct a training course for the operating staff as designated by the Contracting Officer. The training period shall consist of a total of 8 hours of normal working time and shall start after the system is functionally completed but prior to final system acceptance. The field instructions shall cover all of the items contained in the operation and maintenance manuals as well as demonstrations of routine maintenance operations.

-- End of Section --

SECTION 13214

WASTE PETROLEUM TANKS

PART 1 GENERAL

1.1 REFERENCES

Publications listed below form a part of this specification to the extent referenced. Publications are referred to in the text by basic designation only.

AMERICAN ASSOCIATION OF STATE HIGHWAY AND TRANSPORTATION OFFICIALS (AASHTO)

AASHTO HB-17	(2002) Standard Specifications for Highway Bridges

U.S. NATIONAL ARCHIVES AND RECORDS ADMINISTRATION (NARA)

29 CFR 1910.1200	Hazard Communication

UNDERWRITERS LABORATORIES (UL)

UL 142	(2002) Steel Aboveground Tanks for Flammable and Combustible Liquids

1.2 MATERIAL AUTHENTICATION DATA INCLUDED IN DESIGN ANALYSIS

The following is submitted in accordance with Section 01330 SUBMITTAL PROCEDURES. It is included in the Design Analysis for this project.

SD-03 Product Data

Tanks

Accessories

Leak detection system

Material safety data sheets

1.3 SUBMITTALS

The following shall be submitted in accordance with Section 01335 SUBMITTAL PROCEDURES for design built project:

SD-10 Operation and Maintenance Data

Tanks

Leak detection system

1.4 QUALITY ASSURANCE

1.4.1 Required Data

Provide six copies of material safety data sheets (MSDS) for materials to be used at the job site in accordance with 29 CFR 1910.1200.

PART 2 PRODUCTS

2.1 WASTE OIL STORAGE TANK - INSTALLED IN VAULT

Tanks installed in vaults shall be single-wall horizontal type. Capacity as indicated. Tank shall be fabricated from mild carbon steel with flat-flanged heads. Interior coatings shall be polyurethane and exterior coatings shall be red primer. All items included with the tank shall be coated with red primer. The tank shall be manufactured in conformance with Underwriter Laboratories UL 142 specifications.

2.2 WASTE OIL STORAGE TANKS - DIRECT BURIED

Direct buried underground waste oil storage tanks shall be double-wall horizontal type. Capacity as indicated. Outer tank shall enclose and provide leak containment across the total surface of the inner main storage tank; where, the inner tank is completely contained within the outer tank. Provide automatic and manual monitoring of interstitial or annular space between inner and outer walls of tank to detect unauthorized release of hydrocarbons or intrusion of water flow from surrounding soil. A leak at any point on the inner or outer wall shall be detectable.

2.2.1 Tank Sumps

Basis of Design: Total Containment, Multisided fiberglass tank sump with watertight cover, AM451630CWT or polyethelene by OPW-Pisces.

2.2.2 Bulkhead Fittings

Basis of Design: Total Containment; For 3/4 inch (19 mm) conduit, use UB2000. For 4 inch (101 mm) pipe, use FB4950.

2.3 TANK ACCESSORIES

2.3.1 Manholes

Provide a minimum of one 600 mm minimum inside diameter size access manhole. Each manhole shall have a matching flanged watertight cover. Provide manways around each piping connection on the tank to prevent soil contamination due to a faulty connection. Combination of piping connections may be grouped in a single manway.

All manholes at ground level shall be capable of withstanding H-20 highway loading as defined by AASHTO HB-17.

2.3.2 Fill Connection

Provide fill line with an overfill protection device in accordance with device manufacturer's standard.

Overfill protection valve or breaker Basis of Design: OPW model# 61SO-4000 or Kobold.

2.3.3 Atmospheric Vent

Provide an atmospheric vent conforming to device manufacturer's standard applicable DIN, BS or EN standards.

2.3.4 Clean-Out and Gage Connection

Provide a combination clean-out and gage connection with each tank and combination shall consist of a 50 mm vapor-tight gage box and a 50 mm pipe extending downward through top of tank to within 75 mm of tank bottom. Manhole outside gage box shall be cast iron and shall be installed in a concrete anchor block. Provide quick opening top lid and malleable iron wrench for removing lid. Provide clean-out and gage pipe assembly with a locking type cap. Provide entire length of pipe inside the tank with 13 mm wide by 300 mm long slots at alternate locations.

2.3.5 Tank Gages

Provide each tank with a float-operated direct reading tank gage. Gage shall fit a 100 mm tank opening and terminate with a sealed cap and body assembly located in a manhole designed to allow for differential settlement of tank and pavement. Gage shall have tapes and floats to allow reading product level. Provide means to wipe condensate (fogging) from viewing glass when reading gage. Provide and install a level transmitter with a remote readout in the annunciator panel located in the control panel room. The level transmitter probe shall be of magnetostrictive type for liquid level measurement. Equip tank with a high-high level switch. High-high alarm shall be on the annunciator panel located in the control room.

2.3.6 Sounding Rod

Provide sounding rod of required length, evenly graduated and marked to read level of waste oil in tank in mm. Tank end of rod shall have a non-sparking cap. Provide two charts showing tank capacity in liters in 3 mm increments.

2.3.7 Sounding Rod Connection

Weld a 300 by 300 by 6 mm thick striker plate directly below rod opening inside steel tanks.

2.3.8 Dielectric Bushings

Provide nylon dielectric bushings on metallic piping connections to steel tanks.

2.3.9 Cathodic Protection

Provide steel corrosion protection system for buried tanks only. Cathodic protection is not required for steel tanks with protective coatings.

2.4 LEAK DETECTION SYSTEM

For buried tanks only provide a continuous surveillance leak detection system located in the leak containment space between the interior and exterior walls of double-wall tanks. System shall detect leakage into containment space by monitoring interstitial pressure, vacuum, or liquid level. Sensor output and transmission shall be electronic. Sensors shall

be compatible with and detect leakage of materials stored in the tank at a rate of 0.00001 L/s with a 95 percent probability of detecting this size leak and a five percent probability of declaring the tank leaking at this rate when, in fact, it may be leaking less as well as ground water which may leak through the outer shell. Panel shall be in an enclosure suitable for the environment and an audible and visual alarm for each zone and battery backup capable of operating the system continuously for a minimum of 48 hours. Panel shall incorporate a self-test system which permits operator verification of proper operation of leak detection equipment. Mount panel where shown on the drawings. Enclose underground cable in PVC coated conduit isolated from the tanks with a dielectric fitting. Provide instructions and equipment required for calibration of the leak detection system and manufacturer's recommended calibration maintenance schedule.

2.5 INTERIOR PROTECTIVE COATING FOR STEEL TANKS

Provide the entire interior of steel waste oil storage tank, including tank and piping manholes, tank nozzles, manhole covers, sump, and interior ladders (if provided) an interior protective coating in accordance with applicable DIN, BS or EN standards.

2.6 NAMEPLATES

Each major item of equipment shall have the manufacturer's name, address, type or style, model or serial number, and catalog number on a plate secured to the item of equipment.

PART 3 EXECUTION

3.1 EARTHWORK

Excavation and backfilling for tanks shall be as specified in Section 02316 "Excavation, Trenching, and Backfilling for Utilities Systems ."

3.2 DELIVERY TIGHTNESS TEST

Pneumatically test the interstitial space of each tank to 20.68 kPag. Maintain this pressure and apply soapsuds or equivalent material to the exterior of the tank. Visually inspect for leaks. Repair leaks in accordance with the manufacturer's instructions.

3.3 STORAGE TANK INSTALLATION

Install manhole extensions and tank connection access pits to prevent load transfer from the surface to the tank shell. Position tanks so that fuel discharge pipes slope up toward fuel outlet. Each tank fill, clean-out and gage connection, and access manway shall extend 200 mm above finished grade. Where tanks are installed under a paved surface, tank connections shall terminate in manhole extensions with tops flush with finished paved surface. Position tanks on a 1 mm per 100 mm slope with fill port and leak detection sensor located at the low end and vent connection at the high end. Holiday test steel tank coating. Defects found shall be corrected and the tank re-tested prior to backfill. Provide a minimum 300 mm thickness of fill material between the bottom of tank and top of the concrete hold-down pad as recommended by the tank manufacturer. Provide hold-down straps and corrosion resistant accessories as recommended by the FRP or composite tank manufacturer. Anchor steel tanks to reinforced concrete mats, separated by fill material and held in place with steel anchor straps. When applicable, inspect steel tank ensure integrity during

backfill operations. Provide saddles for tanks installed in concrete Vaults.

3.4 ELECTRICAL WORK

Provide switches and devices necessary for controlling leak monitoring equipment. Wiring, fittings, and components shall be explosion-proof.

3.5 INSPECTION

Visually inspect the interior of waste oil storage tanks that have an accessible manhole to insure it is free of debris before waste oil is placed inside. Prior to entry insure a safe atmosphere exists.

3.6 HYDROCARBON AND WATER MONITORING SYSTEM TEST

Activate leak monitoring system and test in accordance with manufacturer's instruction.

3.7 HIGH LEVEL ALARM TEST

Fill each tank with appropriate product and verify the high level alarm functions. Verify overfill protection device functions. The Government will provide product.

-- End of Section --

SECTION 13216

UNDERGROUND PETROLEUM TANKS

PART 1 GENERAL

1.1 REFERENCES

The publications listed below form a part of this specification to the extent referenced. The publications are referred to within the text by the basic designation only.

ASTM INTERNATIONAL (ASTM)

ASTM D 1751	(2004) Preformed Expansion Joint Filler for Concrete Paving and Structural Construction (Nonextruding and Resilient Bituminous Types)
ASTM D 1752	(2004a) Preformed Sponge Rubber and Cork Expansion Joint Fillers for Concrete Paving and Structural Construction
ASTM D 4021	(1992) Glass-Fiber-Reinforced Polyester Underground Petroleum Storage Tanks

NATIONAL FIRE PROTECTION ASSOCIATION (NFPA)

NFPA 30	(2003; Errata 2004; Errata 2006) Flammable and Combustible Liquids Code
NFPA 30A	(2003; TIA 2003) Code for Motor Fuel Dispensing Facilities and Repair Garages
NFPA 31	(2006; Errata 2006) Installation of Oil Burning Equipment
NFPA 70	(2005; TIA 2005) National Electrical Code

STEEL TANK INSTITUTE (STI)

STI P3	(2006) Specification Manual for External Corrosion Protection of Underground Steel Storage Tanks

THE SOCIETY FOR PROTECTIVE COATINGS (SSPC)

SSPC SP 5	(2000; E 2004) White Metal Blast Cleaning

U.S. DEPARTMENT OF DEFENSE (DOD)

MIL-PRF-4556	(Rev F; Am 1) Coating Kit, Epoxy, for Interior of Steel Fuel Tanks

U.S. GENERAL SERVICES ADMINISTRATION (GSA)

FS A-A-60005	(Basic) Frames.Covers, Gratings, Steps,

	Sump and Catch Basin, Manhole

U.S. NATIONAL ARCHIVES AND RECORDS ADMINISTRATION (NARA)

29 CFR 1910.1200	Hazard Communication

UNDERWRITERS LABORATORIES (UL)

UL 1316	(1994; Rev May 2006) Glass-Fiber-Reinforced Plastic Underground Storage Tanks for Petroleum Products, Alcohols, and Alcohol-Gasoline Mixtures
UL 1746	(1993; Rev thru Feb 2002) External Corrosion Protection Systems for Steel Underground Storage Tanks
UL 58	(1996; Rev thru Jul 1998) Steel Underground Tanks for Flammable and Combustible Liquids
UL 674	(2003; Rev thru Apr 2006) Electric Motors and Generators for Use in Division 1 Hazardous (Classified) Locations
UL 698	(2006) Industrial Control Equipment for Hazardous (Classified) Locations
UL 886	(1994; Rev thru Nov 2005) Outlet Boxes and Fittings for Use in Hazardous (Classified) Locations

1.2 QUALITY ASSURANCE

1.2.1 Permitting

Contractor shall obtain necessary permits in conjunction with installation of underground petroleum storage tanks as may be required by federal, state, or local authority. Submit a copy of permits to the Contracting Officer.

1.2.2 Registration

Contractor shall obtain required tank registration forms from governing regulatory agencies. Forms shall be completed and provided to the Contracting Officer and installation environmental office 30 days after contract award for their submission to the regulatory agency.

1.2.3 Licensed Personnel

Personnel required to install underground fuel storage tanks shall be licensed/certified by the state when the state requires licensed installers. Submit a copy of license/certification to the Contracting Officer.

1.2.4 Manufacturer's Certification

Tank installers shall be certified by the tank manufacturer on installation procedures. Submit certification from the tank manufacturer to the

Contracting Officer.

1.2.5 Safety

Ensure employees are trained in the requirements of 29 CFR 1910.1200and understand the information contained in the material safety data sheets for their protection against toxic and hazardous chemical effects.

1.3 SUBMITTALS

Government approval is required for submittals with a "G" designation; submittals not having a "G" designation are for information only. When used, a designation following the "G" designation identifies the office that will review the submittal for the Government. The following shall be submitted in accordance with Section 01330 SUBMITTAL PROCEDURES:

SD-03 Product Data

Tanks

Accessories

Leak detection system

Material safety data sheets

SD-06 Test Reports

Delivery tank tightness

Leak monitoring system

Cathodic protection continuity

SD-07 Certificates

Permits

Tank registration forms

Personnel license/certification

Manufacturer's certification

SD-08 Manufacturer's Instructions

Tank installation

1.4 QUALITY ASSURANCE

1.4.1 Required Data

Provide six copies of material safety data sheets (MSDS) for materials to be used at the job site in accordance with 29 CFR 1910.1200.

PART 2 PRODUCTS

2.1 FUEL STORAGE TANKS

Underground fuel storage tanks shall be double-wall horizontal type conforming to NFPA 30, NFPA 30A, and NFPA 31. Capacity as indicated. Outer tank shall enclose and provide leak containment across the total surface of the inner main storage tank by being physically separated from the inner primary containment tank by standoffs; where, the inner tank is completely contained within the outer tank. Provide automatic and manual monitoring of interstitial or annular space between inner and outer walls of tank to detect unauthorized release of hydrocarbons or intrusion of water flow from surrounding soil. A leak at any point on the inner or outer wall shall be detectable. Design and construction of tanks shall comply with UL 1316, ASTM D 4021, STI P3 Type II, or UL 58 Type II with UL 1746 external protection. Tanks constructed with lap shell or head joints in accordance with UL 58 shall be continuous fillet welded; both on the interior and exterior surfaces.

2.2 TANK ACCESSORIES

2.2.1 Manholes

Provide a minimum of one 750 mm minimum inside diameter size access manhole. Each manhole shall have a matching flanged watertight cover conforming to FS A-A-60005. Provide manhole extensions around each manhole of such a length to extend 200 mm above grade. Provide manhole extensions with watertight covers conforming to FS A-A-60005. Piping manholes shall be the same as access manholes with extensions. Provide manways around each piping connection on the tank to prevent soil contamination due to a faulty connection. Combination of piping connections may be grouped in a single manway. Provide piping in accordance with Section 15192 FUEL OIL PIPING.

2.2.2 Fill Connection

Provide fill line with an overfill protection device which automatically shut off fuel supply into the tank when the tank is 95 percent full to each underground storage tank and shall enter at the top of the tank. Fill line shall be 100 mm minimum diameter and extend to within 150 mm of tank bottom. From top of tank, fill line shall extend vertically or shall slope upward on a uniform grade and connected to a tight fit fill adapter with a locking type cap. Tight fit fill adapter shall be bronze, fitted with a fluoroelastomer gasket suitable for fuel being provided. Adapter shall match the fill elbow on the delivery hose to prevent vapor emissions at the fill connection. Provide a 11.3 liters minimum fill port containment unit for the fill adapter that allows differential settlement between tank and ground surface.

2.2.3 Suction Connection

Provide suction line located at the opposite end of tank from fill line. Suction line shall be 100 mm minimum diameter and extend to within 100 mm of the tank bottom unless indicated otherwise.

2.2.4 Atmospheric Vent

Provide an atmospheric vent conforming to applicable requirements of NFPA 30 or NFPA 30A. Vent pipe shall slope back to tank, terminate at least 3.66 m

above grade or 0.61 m above roofs of adjacent buildings, and located so that discharged vapors will not enter building openings, under building eaves, or downspouts. Provide each tank storing products having a vapor pressure greater than 6.9 kPag with a vent terminal outlet with a pressure and vacuum relief breather valve to ensure vapor recirculation between fuel delivery truck and storage tank. Provide dry disconnect adapter to interconnect tank vent system with the delivery truck vapor space. Size of truck vent line connection shall match equipment connections on fuel delivery truck. Provide each tank storing products having a vapor pressure less than 6.9 kPag with a flame arrestor and sized in accordance with NFPA 30.

2.2.5 Clean-Out and Gage Connection

Provide a combination clean-out and gage connection with each tank and combination shall consist of a 50 mm vapor-tight gage box and a 50 mm pipe extending downward through top of tank to within 75 mm of tank bottom. Manhole outside gage box shall be cast iron and shall be installed in a concrete anchor block. Provide quick opening top lid and malleable iron wrench for removing lid. Provide clean-out and gage pipe assembly with a locking type cap. Provide entire length of pipe inside the tank with 13 mm wide by 300 mm long slots at alternate locations.

2.2.6 Tank Gages

Provide each tank with a float-operated direct reading tank gage. Gage shall fit a 100 mm tank opening and terminate with a sealed cap and body assembly located in a manhole designed to allow for differential settlement of tank and pavement. Gage shall have dual tapes and floats to allow reading product level and water level independently. Provide means to wipe condensate (fogging) from viewing glass when reading gage.

2.2.7 Vapor Recovery Connections

Vapor recovery applies to gasoline only, not diesel or #2 fuel oil. Provide each underground storage tank with vapor recovery connections to receive vapor recovery lines from fuel dispensing unit and provide vapor discharge to tank truck during filling operations. Vapor recovery connections are not required on tanks with products having a vapor pressure less than 6.9 kPag.

2.2.8 Sounding Rod

Provide wood sounding rod of required length, evenly graduated and marked to read level of fuel remaining in tank in mm. Rod shall be seasoned maple or other close grained wood. Tank end of rod shall have a non-sparking cap. Provide two charts showing tank capacity in liters in 3 mm increments.

2.2.9 Sounding Rod Connection

Weld a 300 by 300 by 6 mm thick striker plate directly below rod opening inside steel tanks. On fiberglass reinforced plastic (FRP) tanks provide a 300 by 350 by 6 mm thick aluminum plate laminated on inside bottom surface of tank directly below gauging opening.

2.2.10 Dielectric Bushings

Provide nylon dielectric bushings on metallic piping connections to steel tanks.

2.2.11 Cathodic Protection

Provide steel tanks with a cathodic protection system as specified in Section 26 42 13.00 20 CATHODIC PROTECTION BY GALVANIC ANODES. Cathodic protection is not required for steel tanks with UL 1746 protective coatings.

2.3 LEAK DETECTION SYSTEM

Provide a continuous surveillance leak detection system suitable for operation in a NFPA 70, Class l, Division l, Group D environment and located in the leak containment space between the interior and exterior walls of double-wall tanks. System shall detect leakage into containment space by monitoring interstitial pressure, vacuum, or liquid level variations electronically. A liquid sensor in a dry interstitial space will not be acceptable. Sensor output and transmission shall be electronic. Liquids used in containment space shall contain a corrosion inhibitor. Sensors shall be compatible with and detect leakage of materials stored in the tank at a rate of 0.00001 L/s with a 95 percent probability of detecting this size leak and a five percent probability of declaring the tank leaking at this rate when, in fact, it may be leaking less as well as ground water which may leak through the outer shell. Panel shall be in a NEMA enclosure suitable for the environment and an audible and visual alarm for each zone and battery backup capable of operating the system continuously for a minimum of 48 hours. Panel shall incorporate a self-test system which permits operator verification of proper operation of leak detection equipment. Mount panel where shown on the drawings. Enclose underground cable in PVC coated conduit [isolated from the tanks with a dielectric fitting]. Provide instructions and equipment required for calibration of the leak detection system and manufacturer's recommended calibration maintenance schedule.

2.4 INTERIOR PROTECTIVE COATING FOR STEEL TANKS

[Provide each tank with an interior protective coating conforming to MIL-PRF-4556 from the tank bottom up to 450 mm off the bottom. Interior coating shall be a two-coat epoxy coating system consisting of a prime coat and a finish coat to achieve a total dry film thickness of not less than 0.15 mm. Apply coating system in accordance with instructions from the coating manufacturer for application, including surface preparation, application equipment, and appropriate safety precautions. Surface preparation for the area to be coated shall include the following:

a. Grind rough surfaces on welded seams, sharp edges, and corners to a minimum of a 3 mm radius.

b. Abrasive blast surfaces to white metal in accordance with SSPC SP 5.

c. Clean blasted surfaces to remove oil, dust, sand, or other blasting residue and moisture.

d. Apply prime coat within eight hours after cleaning. If visible rusting occurs after cleaning, regardless of the time interval, re-blast rusted surfaces prior to applying primer coat.

Prepare and mix primer and finish coats in accordance with the manufacturers written instructions and apply following manufacturers instructions, allowing proper curing time between prime and finish coats. After completion of finished coat, surfaces shall be inspected by the

Contractor for pinholes, skips, inadequate coating thickness, and other defects. Repair imperfections found in accordance with the coating manufacturers instructions.]

2.5 NAMEPLATES

Each major item of equipment shall have the manufacturer's name, address, type or style, model or serial number, and catalog number on a plate secured to the item of equipment.

PART 3 EXECUTION

3.1 EARTHWORK

Excavation and backfilling for tanks shall be as specified in Section 02300 EARTHWORK.

3.2 DELIVERY TIGHTNESS TEST

Pneumatically test the interstitial space of each tank to 20.68 kPag. Maintain this pressure and apply soapsuds or equivalent material to the exterior of the tank. Visually inspect for leaks. Repair leaks in accordance with the manufacturer's instructions.

3.3 STORAGE TANK INSTALLATION

Tank installation shall be in accordance with NFPA 30, NFPA 30A, and NFPA 31 and performed by personnel certified by the tank manufacturer and State Regulations. Install manhole extensions and tank connection access pits to prevent load transfer from the surface to the tank shell. Position tanks so that fuel discharge pipes slope up toward fuel outlet. Each tank fill, clean-out and gage connection, and access manway shall [extend 200 mm above finished grade] [be flush with finished grade]. Where tanks are installed under a paved surface, tank connections shall terminate in manhole extensions with tops flush with finished paved surface. Position tanks on a 1 mm per 100 mm slope with fill port and leak detection sensor located at the low end and vent connection at the high end. Holiday test steel tank coating. Defects found shall be corrected and the tank re-tested prior to backfill. Provide a minimum 300 mmthickness of fill material between the bottom of tank and top of the concrete hold-down pad as recommended by the manufacture. Provide fiber glass reinforced plastic hold-down straps and corrosion resistant accessories as recommended by the FRP or composite tank manufacturer. Anchor steel tanks to reinforced concrete mats, separated by fill material and held in place with steel anchor straps. Coat straps, turnbuckles, and anchors to resist corrosion. Provide 25 mm wide insulating dielectric straps conforming to ASTM D 1751 or ASTM D 1752 between tank shell and metal straps. Inspect steel tank anodes to ensure integrity during backfill operations.

3.4 ELECTRICAL WORK

Provide switches and devices necessary for controlling leak monitoring equipment. Wiring, fittings, and components shall be explosion-proof in compliance with applicable requirements of UL 674, UL 698, and UL 886 for Class I, Division 1, Group C and D hazardous locations. Electrical installations shall conform to requirements of NFPA 70.

3.5 INSPECTION

Visually inspect the interior of fuel storage tanks that have an accessible manhole to insure it is free of debris before fuel is placed inside. Prior to entry insure a safe atmosphere exists.

3.6 HYDROCARBON AND WATER MONITORING SYSTEM TEST

Activate leak monitoring system and test in accordance with manufacturer's instruction.

3.7 HIGH LEVEL ALARM TEST

Fill each tank with appropriate product and verify the high level alarm functions. Verify overfill protection device functions. The Government will provide product.

-- End of Section --

SECTION 13401

FLOW MEASURING EQUIPMENT

PART 1 GENERAL

1.1 SYSTEM REQUIREMENTS

The flow measuring equipment shall be the electromagnetic meter type. The design shall permit ease of installation and shall not have any features hazardous to personnel or detrimental to the equipment. Provision shall be made to align and adequately lubricate moving parts. Interior parts shall be easily accessible for adjustment, repair, and replacement.

1.2 SUBMITTALS

Government approval is required for submittals with a "G" designation; submittals not having a "G" designation are for information only. When used, a designation following the "G" designation identifies the office that will review the submittal for the Government. Submit the following in accordance with Section 01330 SUBMITTAL PROCEDURES:

SD-03 Product Data

Flow measuring equipment components

Read-out device

SD-08 Manufacturer's Instructions

Flow measuring equipment components

Submit manufacturer's written recommendation for installation handling and operation.

PART 2 PRODUCTS

2.1 MATERIALS AND EQUIPMENT

Unless otherwise specified, all materials and equipment shall be standard commercial products in regular production by the manufacturer and suitable for the required service.

2.1.1 Electromagnetic Meter

Provide a magnetic flow meter where indicated. The magnetic flow meter shall be suitable for installation in a ductile iron pipe. Flowmeter shall be suitable for out door installaton, inside a manhole, where ambient temperatures range from -6 degrees C to 45 degrees C. The flow meter shall be able to operate where there is intermittent flow (no flows at times), but where flow meter will remain full at all times. The magnetic flow meter system shall include a flow tube and remote read-out receiver. Flow meter shall provide a 4-20 mA signal for transmission of signal. For flowrate indication and integration and for control of chemical pump feedrate. Accuracy shall be plus or minus one percent over the design flow range with upstream length of unobstructured flow equal to 5 pipe diameters and downstream length of unobstructed flow equal to 3 pipe diameters.

2.2 READ-OUT DEVICE

Provide the meter with a read-out device which shall read from 0 to 110 cubic meters per hour.

2.2.1 Remote Read-Out

Provide an indicator and an integrator for remote read-out of flow. The scale graduation shall be uniform. The read-out shall be visible through a shatterproof clear window. The read-out mechanism shall not be affected by the intended end use environment. The unit shall be non-corrosive and weatherproof and design to prevent the accumulation of moisture or fog inside the case. Device shall be mounted where shown on Drawings. Read-out device shall be able to be mounted in any orientatin.

2.2.1.1 Indicator

Shall read out in cubic meters per hour.

2.2.1.2 Integrator

Shall read the total flow in cubic meters.

2.3 SPARE PARTS

Provide all standard recommended spare parts as specified in the manufacturer's instruction manuals for each component in the system.

PART 3 EXECUTION

3.1 MATERIALS PROTECTION

Furnish flow meter and appurtenances in accordance with the manufacturer's standard practice suitable for end use environment.

3.2 INSTALLATION

Install per manufacturer's recommendation.

3.3 FIELD TESTS AND INSPECTIONS

Test and calibrate in place the flow measuring equipment to demonstrate that it meets the accuracy requirements for the full range of flows specified herein. Labor, equipment, and incidentals required for the tests, including electric power and water required for tests shall provide by others. The Government's Contracting Officer will witness all field tests and conduct all field inspections. Rectify any deficiencies found and retest work affected by such deficiencies at the flow meter supplier's expense. Record data from each field test shall be recorded and documented in a formal field test report.

-- End of Section --

SECTION 13855

FIRE DETECTION EQUIPMENT

PART 1 GENERAL

1.1 REFERENCES

The publications listed below form a part of this specification to the extent referenced. The publications are referred to in the text by basic designation only.

NATIONAL FIRE PROTECTION ASSOCIATION (NFPA)

NFPA 72	(1999) National Fire Alarm Code
NFPA 90A	(1999) Installation of Air Conditioning and Ventilating Systems

UNDERWRITERS LABORATORIES (UL)

UL 268A	(1998) Smoke Detectors for Duct Application

1.2 MATERIAL AUTHENTICATION DATA INCLUDED IN DESIGN ANALYSIS

The following is submitted in accordance with Section 01335 SUBMITTAL PROCEDURES FOR DESIGN/BUILD PROJECT. It is included in the Design Analysis for this project.

SD-03 Product Data

Smoke Detectors

Substantiating audible notification requirements.

1.3 SUBMITTALS

The following shall be submitted in accordance with Section 01335 SUBMITTAL PROCEDURES for design built project:

SD-10 Operation and Maintenance Data

Smoke Detector Operation and Maintenance Data

Two copies of operating instructions outlining step-by-step procedures required for operation. The instructions shall include the manufacturer's name, model number, service manual, parts list, and complete description of equipment and their basic operating features. Six copies of maintenance instructions listing routine maintenance procedures, possible breakdowns and repairs, and troubleshooting guide. The instructions shall include conduit layout, equipment layout and simplified wiring as installed.

1.4 DOCUMENTATION FOR PROPOSED VARIANT PRODUCTS

For products not explicitly named in the specification that meet product

requirement criteria named herein, product data as listed in article titled MATERIAL AUTHENTICATION DATA INCLUDED IN DESIGN ANALYSIS shall be submitted for review. Product information will be provided to establish that proposed product meets the requirements of this specification and has the indicated qualities related to type, function, dimension, in-service performance, physical properties, appearance, or other relevant characteristics that equal or exceed those of specified product. Product is consistent with the Contract Documents and will produce the indicated results, and is compatible with other portions of the Work.

1.5 GENERAL REQUIREMENTS

1.5.1 Compliance

The fire detection equipment furnished shall be compatible and be approved or listed in accordance with the applicable DIN, BS, EN, or I.E.C. standards.

1.6 DELIVERY AND STORAGE

Equipment delivered and placed in storage shall be stored with protection from the weather, humidity and temperature variation, dirt, dust, and any other contaminants.

PART 2 PRODUCTS

2.1 MANUFACTURERS

Basis of Design: Detectomat.

Acceptable Manufacturers:

1. Basis of Design manufacturer.
2. Equivalent product complying with requirements of this specification for proposed variant products.

2.2 FIRE DETECTING DEVICES

Fire detecting devices shall comply with the applicable requirements of DIN, or I.E.C. standards. The detectors shall be provided as indicated on Drawings. Detector base shall have screw terminals for making connections. No solder connections will be allowed.

Basis of Design: Detectomat.

2.2.1 Heat Detectors

Heat detectors shall be designed for detection of fire by fixed temperature. Heat detector spacing shall be rated in accordance with DIN, BS, or EN standards. Detectors located in multipurpose areas, kitchen, dishwash area and other areas as directed by Contracting Officer, shall be types approved for such locations. Heat detectors located in attic spaces or similar concealed spaces below the roof shall be intermediate temperature rated.

2.2.1.1 Fixed Temperature Detectors

Detectors shall be designed for surface outlet box mounting and supported independently of wiring connections. Detectors shall be designed to detect

high heat. The detectors shall have a specific temperature setting of 57.2 degrees C. . The DIN, I.E.C., BS or EN standards test rating for the fixed temperature detectors shall be rated for 4.57 by 4.57 m.

2.2.2 Smoke Detectors

Smoke detectors shall be designed for detection of abnormal smoke densities. Smoke detectors shall be photoelectric type. Detectors shall contain a visible indicator LED that shows when the unit is in alarm condition. Detectors shall not be adversely affected by vibration or pressure. Detectors shall be the hardwired type in which the detector base contains terminals for making wiring connections to 120 volts AC. Detectors shall be interconnected to all smoke detectors and duct detectors in order that detection by any single unit shall activate notification on all units. Smoke detectors shall comply with NFPA 72 for the design, spacing, wiring and location of initiating devices.

2.2.2.1 Photoelectric Detectors

Detectors shall operate on a light scattering concept using an LED light source. Failure of the LED shall not cause an alarm condition. Detectors shall be factory set for sensitivity and shall require no field adjustments of any kind. Detectors shall have an obscuration rating in accordance with DIN, or I.E.C. standards.

2.2.2.2 Duct Detectors

Duct-mounted photoelectric smoke detectors shall be furnished and installed where indicated and in accordance with NFPA 90A. Units shall consist of a smoke detector as specified in paragraph Photoelectric Detectors, mounted in a special housing fitted with duct sampling tubes. Detector circuitry shall be mounted in a metallic enclosure exterior to the duct. Detectors shall have a manual reset. Detectors shall be rated for air velocities applicable to project. full width of the duct. The duct detector package shall conform to the requirements of NFPA 90A, UL 268A, DIN, BS, EN standards, and shall be UL listed for use in air-handling systems. Duct detectors shall be interconnected to smoke alarms so that detection of smoke in the duct will activate all smoke detector alarms. Lights to indicate the operation and alarm condition; and the test and reset buttons shall be visible and accessible with the unit installed and the cover in place. Detectors mounted above 1.83 m and those mounted below 1.83 m that cannot be easily accessed while standing on the floor, shall be provided with a remote detector indicator panel containing test and reset switches. Remote lamps and switches as well as the affected fan units shall be properly identified in etched plastic placards. Detectors shall have auxiliary contacts to provide control, interlock, and shutdown functions specified in Section 15950 HEATING, VENTILATING AND AIR CONDITIONING (HVAC) CONTROL SYSTEMS. The detectors shall be supplied by the smoke detector manufacturer to ensure complete system compatibility.

2.2.2.3 Audible Notification

Audible notification feature shall conform to the applicable requirements of DIN, or I.E.C. standards. Audible feature shall generate a unique audible sound from other devices provided in the building and surrounding area. Alarm horns shall be integral with smoke detector unit and shall produce a sound rating of at least 85 dBA at 3.05 m.

2.3 FIRE DETECTION PERIPHERAL EQUIPMENT

2.3.1 Conduit

Conduit and fittings shall comply with DIN, or I.E.C. standards.

2.3.2 Wiring

Wiring shall conform to DIN, or I.E.C. standards. Wiring for AC voltage power shall be 4 mm minimum. Field wiring shall be solid copper and installed in metallic conduit or electrical metallic tubing, except rigid plastic conduit may be used under slab-on-grade. Conductors shall be color coded. Conductors used for the same functions shall be similarly color coded. Wiring code color shall remain uniform throughout the circuit.

PART 3 EXECUTION

3.1 INSTALLATION

All work shall be installed as shown, and in accordance with DIN, or I.E.C. standards, and in accordance with the manufacturer's diagrams and recommendations, unless otherwise specified. Smoke detectors shall not be installed until construction is essentially complete and the building has been thoroughly cleaned.

3.1.1 Power Supply for the System

A single dedicated circuit connection for supplying power from a branch circuit to each building fire alarm system shall be provided. The power shall be supplied as shown on the drawings. Emergency power shall be provided by an uninterruptible power supply at the panelboard location.

3.1.2 Wiring

Conduit size for wiring shall be in accordance with DIN, or I.E.C. standards. Wiring shall not be installed in conduits, junction boxes, or outlet boxes with conductors of lighting and other power systems. Not more than two conductors shall be installed under any device screw terminal. The wires under the screw terminal shall be securely clamped in place under the screw terminal. The wires shall be broken and not twisted around the terminal. Circuit conductors entering or leaving any mounting box, or outlet box enclosure shall be connected to screw terminals with each terminal and conductor marked in accordance with the wiring diagram. Connections and splices shall be made using screw terminal blocks. The use of wire nut type connectors in the system is prohibited. Wiring shall be readily accessible without removing any component parts.

3.1.3 Detectors

Detectors shall be located and installed in accordance with NFPA 72. Duct detectors shall be installed per NFPA 90A. Detectors shall be connected as indicated on the drawings. Detectors shall be at least 300 mm from any part of any lighting fixture. Detectors shall be located at least 900 mm from diffusers of air handling systems. Each detector shall be provided with appropriate mounting hardware as required by its mounting location. Detectors which mount in open space shall be mounted directly to the end of the stubbed down rigid conduit drop. Conduit drops shall be firmly secured to minimize detector sway. Where length of conduit drop from ceiling or wall surface exceeds 900 mm, sway bracing shall be provided. Detectors

installed in concealed locations (above ceiling, raised floors, etc.) shall have a remote visible indicator LED/LCD in a finished, visible location.

3.2 GROUNDING

Grounding shall be provided by connecting to building ground system.

3.3 TESTING

The Contractor shall notify the Contracting Officer before the preliminary and acceptance tests are to be conducted. The tests shall be performed in accordance with the approved test procedures in the presence of the Contracting Officer. The Contractor shall furnish instruments and personnel required for the tests.

3.3.1 Preliminary Tests

Upon completion of the installation, the system shall be subjected to functional and operational performance tests including tests of each installed initiating and notification appliance, when required. Tests shall include the meggering of system conductors to determine that the system is free from grounded, shorted, or open circuits. The megger test shall be conducted prior to the installation of equipment. If deficiencies are found, corrections shall be made and the system shall be retested to assure that it is functional. After completing the preliminary testing the Contractor shall complete and submit the DIN, or I.E.C. standards, Certificate of Completion.

3.3.2 Acceptance Test

Acceptance testing shall not be performed until the Contractor has completed and submitted the Certificate of Completion. Testing shall be in accordance with DIN, or I.E.C. standards. The recommended tests in DIN, or I.E.C. standards shall be considered mandatory and shall verify that previous deficiencies have been corrected. The Contractor shall complete and submit the Inspection and Testing Form. The test shall include all requirements of DIN, or I.E.C. standards and the following:

a. Tests of alarm notification features, individually and systemwide.

b. Complete operational tests under emergency power supply.

c. Visual inspection of wiring connections.

d. Opening the circuit at each detection device and notification appliance to test the wiring supervisory feature.

e. Ground fault.

f. Short circuit faults.

g. Stray voltage.

-- End of Section --

SECTION 14630

OVERHEAD ELECTRIC CRANES

PART 1 GENERAL

1.1 REFERENCES

The publications listed below form a part of this specification to the extent referenced. The publications are referred to within the text by the basic designation only.

AMERICAN GEAR MANUFACTURERS ASSOCIATION (AGMA)

AGMA 2000	(1988; Rev A) Gear Classification and Inspection Handbook Tolerances and Measuring Methods for Unassembled Spur and Helical Gears (Including Metric Equivalents)
AGMA 2001	(1995; Rev C) Fundamental Rating Factors and Calculation Methods for Involute Spur and Helical Gear Teeth
AGMA 6009	(2000; Rev A) Standard for Gearmotor Shaft Mounted and Screw Conveyor Drives
AGMA 6010	(1997; Rev F) Standard for Spur, Helical, Herringbone, and Bevel Enclosed Drives

AMERICAN INSTITUTE OF STEEL CONSTRUCTION (AISC)

AISC 316	(1989) ASD Manual of Steel Construction

AMERICAN WELDING SOCIETY (AWS)

AWS D1.1/D1.1M	(2004) Structural Welding Code - Steel
AWS D14.1	(1997) Welding Industrial and Mill Cranes and Other Material Handling Equipment

ASME INTERNATIONAL (ASME)

ASME B30.16	(2003) Overhead Hoists (Underhung)
ASME B30.17	(2003) Overhead and Gantry Cranes (Top Running Bridge, Single Girder, Underhung Hoists)
ASME B30.2	(2002) Overhead and Gantry Cranes (Top Running Bridge, Single or Multiple Girder, Top Running Trolley Hoist)
ASME HST-1	(1999; R 2004) Electric Chain Hoists
ASME HST-4	(1999; R 2004) Overhead Electric Wire Rope

	Hoists
ASME HST-5	(1999; R 2004) Air Chain Hoists
ASME HST-6	(1999) Air Wire Rope Hoists

ASTM INTERNATIONAL (ASTM)

ASTM A 159	(1983; R 2001) Automotive Gray Iron Castings
ASTM A 325M	(2004b) Structural Bolts, Steel, Heat Treated, 830 Mpa Minimum Tensile Strength (Metric)
ASTM A 490M	(2004a) High-Strength Steel Bolts, Classes 10.9 and 10.9.3, for Structural Steel Joints (Metric)
ASTM A 668/A 668M	(2004) Steel Forgings, Carbon and Alloy, for General Industrial Use
ASTM B 438/B 438M	(2004) Sintered Bronze Bearings (Oil Impregnated)
ASTM B 439	(2000e1) Iron-Base Sintered Bearings (Oil-Impregnated)
ASTM B 612	(2000) Iron Bronze Sintered Bearings (Oil-Impregnated)
ASTM B 633	(1998e1) Electrodeposited Coatings of Zinc on Iron and Steel
ASTM E 125	(1963; R 2003) Photographs for Magnetic Particle Indications on Ferrous Castings

CRANE MANUFACTURERS ASSOCIATION OF AMERICA (CMAA)

CMAA 70	(2004) EnviroTop Running and Bridge and Gantry Type Multiple Girder Electric Overhead Traveling Cranes, No. 70
CMAA 74	(2004) Top Running and Under Running Single Girder Electric Overhead Cranes Utilizing Under Running Trolley Hoist, No. 74

NATIONAL ELECTRICAL MANUFACTURERS ASSOCIATION (NEMA)

NEMA ICS 2	(2000; R 2004) Industrial Controls and Systems: Controllers, Contactors, and Overload Relays Rated Not More than 2000 Volts AC or 750 Volts DC
NEMA ICS 6	(1993; R 2001) Industrial Control and Systems: Enclosures
NEMA MG 1	(2003; R 2004) Motors and Generators

NATIONAL FIRE PROTECTION ASSOCIATION (NFPA)

NFPA 70	(2005) National Electrical Code

UNDERWRITERS LABORATORIES (UL)

UL 1004	(1994; Rev thru Feb 2001) Electric Motors
UL 1449	(1996; Rev thru Jul 2002) Transient Voltage Surge Suppressors
UL 489	(2002; Rev thru May 2003) Molded-Case Circuit Breakers, Molded-Case Switches, and Circuit-Breaker Enclosures
UL 50	(1995; Rev thru Sep 2003) Enclosures for Electrical Equipment

1.2 SUBMITTALS

Government approval is required for submittals with a "G" designation; submittals not having a "G" designation are for information only. When used, a designation following the "G" designation identifies the office that will review the submittal for the Government. The following shall be submitted in accordance with Section 01330 SUBMITTAL PROCEDURES:

SD-02 Shop Drawings

Electric Overhead Cranes; G AED

Detail drawings containing complete wiring and schematic diagrams. Diagrams shall indicate each numbered wire, where wire initiates, where wire terminates, and any other details required to demonstrate that the system has been coordinated and will properly function as a unit. Drawings shall show layout and anchorage of equipment and appurtenances, and equipment relationship to other parts of the work including clearances for maintenance and operation.

SD-03 Product Data

Crane Design Criteria

A complete list of equipment and materials, including manufacturer's descriptive data and technical literature, performance charts and curves, catalog cuts, and installation instructions.

Hooks

Hook material and any heat treatment performed, stamped on the hook shank or documented in certification papers furnished with the hooks. Crane test data recorded on appropriate test record forms suitable for retention for the life of the crane.

Electric Overhead Cranes

A complete list of equipment and materials, including

manufacturer's descriptive data and technical literature, performance charts and curves, catalog cuts, and installation instructions.

Spare Parts

Spare parts data for each different item of material and equipment specified, after approval of the detail drawings and not later than 3 months prior to the date of beneficial occupancy. The data shall include a complete list of parts and supplies, with current unit prices and source of supply.

Framed Instructions

Diagrams, instructions and safety requirements.

SD-06 Test Reports

Acceptance Testing

Test reports in booklet form showing all field tests performed to adjust each component and all field tests performed to prove compliance with the specified performance criteria, upon completion and testing of the installed system. The report shall include the information as required by paragraph ACCEPTANCE TESTING.

SD-10 Operation and Maintenance Data

Operation and Maintenance Manuals; G RE

Number of copies copies of operation and maintenance manuals for the equipment furnished shall be in accordance with Section 01330 SUBMITTAL PROCEDURES. One complete set prior to performance testing and the remainder upon acceptance. Operation manuals shall detail the step-by-step procedures required for system startup, operation and shutdown. Operation manuals shall include the manufacturer's name, model number, parts list, and brief description of all equipment and basic operating features. Maintenance manuals shall list routine maintenance procedures, possible breakdowns and repairs, and troubleshooting guides. Maintenance manuals shall include piping and equipment layout and simplified wiring and control diagrams of the system as installed. Operation and maintenance manuals shall be approved prior to the field training course.

1.3 QUALIFICATION

Electric overhead cranes shall be designed and manufactured by a company with a minimum of 10 years of specialized experience in designing and manufacturing the type of overhead crane required to meet requirements of the Contract Documents.

1.4 TESTING AND INSPECTIONS

1.4.1 Pre-Delivery Inspections

Contractor shall be responsible for performance of quality control inspections, testing and documentation of steel castings, hook assembly and

nuclear safety as follows.

1.4.2 Inspection of Steel Castings

Load-carrying steel castings shall be visually inspected and tested using the magnetic-particle inspection method. Allowable degree of discontinuities shall be referenced to ASTM E 125, and shall be related to service loads and stresses, critical configuration, location and type. Methods of repairing the discontinuities shall be subject to review by the Contracting Officer.

1.4.3 Inspection of Hook Assembly

Hook and nut shall be inspected by a magnetic-particle type inspection or X-rayed prior to delivery. Documentation of hook inspection shall be furnished to Contracting Officer at the field operational testing. As part of the acceptance standard, linear indications will not be allowed. Welding repairs of hook will not be permitted. A hook showing linear indications, damage or deformation will not be accepted, and shall be replaced.

1.5 DESIGN CRITERIA

Cranes shall operate in the given spaces and shall match the runway dimensions and rails indicated. Hook coverage, hook vertical travel, clear hook height, lifting capacity, and load test weight shall not be less than that indicated.

1.5.1 General

The hoisting equipment shall include the following:

Location	Number of Cranes	Capacity (Metric Tons)
Maintenance Garage (3-Bay)	1	2-Ton
Maintenance Garage (9-Bay)	2	1 each - 2-Ton 1 each - 10-Ton

1.5.1.1 Welding

Welding shall be in accordance with qualified procedures using AWS D14.1 as modified. Written welding procedures shall specify the Contractor's standard dimensional tolerances for deviation from camber and sweep and such tolerances shall not exceed those specified in AWS D14.1. All welding shall be performed indoors. Welders and welding operators shall be qualified in accordance with AWS D1.1/D1.1M or AWS D14.1. Allowable stress values shall be in accordance with CMAA 70.

1.5.1.2 Crane Design Criteria

The cranes shall be designed to operate in the spaces and match the runway dimensions and rails indicated. The hook coverage and hook vertical travel shall not be less than that indicated.

1.5.2 Classification

Crane shall be designed and constructed to CMAA 70 Class B, service requirements for operation in indoor non-hazardous environment with hoist in accordance with ASME HST-1, ASME HST-4, ASME HST-5 and ASME HST-6.

1.5.3 Rated Capacity and Speeds

Rated capacity of crane shall be 5 and 15 metric tons as shown on the applicable building drawings. Lower load block or assembly of hook, swivel bearing sheaves, pins and frame suspended by the hoisting ropes shall not be considered part of the rated capacity. Rated speeds (in meters/second) for the hoist, bridge and trolley at the rated load shall be as follows:

	Rated Speeds meters per second	
Description	Minimum	Maximum
Main Hoist	0.013	0.083
Trolley	0.083	0.33
Bridge	0.083	0.33

1.6 DELIVERY AND STORAGE

Equipment delivered and placed in storage shall be stored with protection from the weather, humidity and temperature variations, dirt and dust, and other contaminants.

1.7 FIELD MEASUREMENTS

Before performing any work, Contractor shall become familiar with all details of the work, verify all dimensions in the field, and submit a letter describing the results of this verification including discrepancies to the Contracting Officer and crane manufacturer.

PART 2 PRODUCTS

2.1 MATERIALS

2.1.1 General

Materials and equipment shall be standard products of manufacturers regularly engaged in the fabrication of complete and totally functional cranes including necessary ancillary equipment.

2.1.2 Nameplates

Nameplates shall be secured to each major component of equipment with the manufacturer's name, address, type or style, model or catalog number, and serial number. Two bridge identification plates shall be provided, one for each side of bridge. Identified plates shall be noncorrosive metal with letters which are easily read from the floor, showing a separate number such as BC-1, BC-2, for each bridge crane.

2.1.3 Use of Asbestos Products

Materials and products required for designing and manufacturing cranes shall not contain asbestos.

2.1.4 Capacity Plates

Two capacity plates indicating the crane capacity in metric tons are

required, one secured to each side of bridge. Each capacity plate shall be fabricated of a steel backing plate and exterior quality/fade-resistant stick-on labels with letters large enough to be easily read from the floor. Capacity plates shall be placed in a location visible to pendant operator's position after the crane has been installed.

2.1.5 Safety Warnings

Readable warning labels shall be affixed to each lift block or control pendant in a readable position in accordance with ASME B30.16, ASME B30.2 and ASME B30.17. The Contractor shall submit these safety warnings, diagrams and other framed instructions for display as indicated by the Contractin Officer.

a. The word "WARNING" or other legend shall be designed to bring the label to the attention of the operator. Warning labels shall be durable type and display the following information concerning safe-operating procedures: Cautionary language against lifting more than the rated load; operating the hoist when the hook is not centered under the hoist; operating hoist with twisted, kinked or damaged rope; operating damaged or malfunctioning hoist; operating a rope hoist with a rope that is not properly seated in its hoist drum groove; lifting people; lifting loads over people; and removing or obscuring the warning label.

b. To avoid operation of crane in the wrong direction, the words "FORWARD" and "REVERSE" and accompanying directional arrows shall be affixed in a location on the trolley and bridge which are visible and readable to the operator from pendant station. The words "FORWARD" and "REVERSE" shall agree with the markings on control pendant. Directional arrows shall not be indicated on control pendant.

2.2 STRUCTURAL MATERIALS

2.2.1 Bolts, Nuts and Washers

High-strength bolted connections shall utilize SAE Grade 5 bolts with corresponding lockwashers, nuts, etc., conforming to requirements of AISC 316 bolts. Bolts, nuts and washers shall conform to ASTM A 325M bolts. Galvanized bolts are not acceptable. ASTM A 490M bolts shall not be used.

2.2.2 Bridge Girder or Girders

Bridge girders shall be welded structural steel box sections, wide flange beams, standard I-Beams, reinforced beams or sections fabricated from rolled plates and shapes.

2.2.3 Bridge Rails or Bars

Trolley runway rails, crane girders and other sections shall be straight and true. When loaded with motor driven cranes the deflection of rails shall not exceed 1/800 of the span. The deflection shall be calculated with the worst case of two loaded bridge cranes located adjacent each other. Rail joints shall be flush and true without misalignment of running tread and shall be designed to minimize vibration. The gap between adjacent rail ends and the vertical misalignment of running treads shall not exceed 1.588 mm . The bridge rail shall be leveled to a plus-or-minus 3 mm at all rail support joints. Bridge rail shall be fastened to top

cover plate, wide flange or centered on flange or offset near web plate for welded box sections, complete with welded clips. Bridge rail joints shall be bolted using standard joint bars. Rail joints shall be staggered. A positive stop shall be provided at bridge rail ends to prevent creep.

2.2.4 End Ties and Bridge Girder End Connections

Welded steel box sections shall be used for end ties, full depth diaphragms shall be provided at girder connections and jacking points. Horizontal gusset plates shall be provided at the elevation of top and bottom end tie flanges for connection to girder ends. End connections shall be made with high-strength bolts. Body-bound bolts fitted in drilled and reamed holes shall be used to maintain the crane square.

2.2.5 Bridge End Trucks

End trucks shall be the rotating or fixed axle type fabricated of structural tubes or from structural steel to provide a rigid box section structure. Jacking pads shall be provided for removal of wheel assemblies.

2.2.6 Stops and Bumpers

Crane runways and bridge girders shall be fitted with structural steel end stops. Bridge end trucks and trolley frames shall be fitted with shock-absorbing spring type bumpers capable of decelerating and stopping the bridge and/or trolley within the limits stated by OSHA and MHI CMAA. Trolley end stops shall be of sufficient strength to withstand the impact of a fully loaded trolley moving at 50 percent of maximum rated travel speed. When two bridge cranes are on the same runway, one crane shall be fitted with shock-absorbing bumpers on each end of each end-truck, and the other crane shall have shock-absorbing bumpers as per above on one end only of each end-truck which is the opposite end of the adjacent crane. The other end of the end-truck shall be fitted with a structural steel stop to engage the bumpers of the adjacent crane. Bridge bumper stops shall be provided as specified in Section 05120 STRUCTURAL STEEL. Stops shall be located to permit maximum bridge and trolley travel.

2.2.7 Runway Rails

The runway rail size shall be as recommended by crane manufacturer.

2.3 MECHANICAL EQUIPMENT

2.3.1 Drives

2.3.1.1 Bridge Drives

Bridge drives shall be A-4 drive arrangement as specified in CMAA 70 or CMAA 74. Bridge drive shall consist of a single electric motor mechanically connected through gear reduction and drive shafts to the drive wheels or separate drive motors at each end of bridge. Acceleration and deceleration shall meet the requirements specified in this section. Gears shall conform to applicable AGMA standards. Gear reducers shall be oil tight and fully enclosed with pressure or splash type lubrication. Bridge-travel limit-switches are optional.

2.3.1.2 Trolley Drives

Trolley shall be complete with a drive arrangement with a minimum of two

wheels driven by an integral electric motor. Drive mechanism shall run in totally enclosed oil bath. Limit switches are optional for drive mechanism. Acceleration and deceleration controls shall meet requirements specified in this section.

2.3.2 Load Blocks

2.3.2.1 Main Hoist Load Blocks

Load blocks shall be of welded steel construction. Load blocks shall be provided with hot-rolled or forged steel fixed crosshead separate from the sheave pin with swivel mounting for forged steel hook. Each lubrication fitting for sheave pins shall be an independent type recessed within the sheave pin or adequately guarded to prevent damage. The pitch diameter of the sheaves shall be not less than 16 times the rope diameter. Sheaves shall be supported by roller type bearings on steel sheave pins. Provisions for external lubrication shall be provided to allow pressure relief and purging of old grease. Sheave blocks shall be constructed to provide maximum personnel safety and to prevent the hoist rope from leaving the sheaves under normal operating condition.

2.3.2.2 Hook Assembly

Hooks shall be single barbed and shall be made of forged steel complying with ASTM A 668/A 668M. Hooks shall be fitted with safety latches designed to preclude inadvertent displacement of slings from the hook saddle. Painting or welding shall not be performed on the hook. Hook nut shall be secured with a removable type set screw or other similar fastener, but shall not be welded. Hooks shall be designed and commercially rated with safety factors in accordance with MHI CMAA. The hook shall be free to rotate through 360 degrees when supporting the rated load.

2.3.3 Hoisting Ropes

Hoisting ropes shall be regular lay, preformed, uncoated, improved plow steel, 6 by 37 construction, with independent wire rope core. Ropes shall be suited to meet the service requirements. Rope socketing or U-bolt clip connections shall be made in accordance with clip or rope manufacturer's recommendation, and shall be equal to or greater than the rope strength. Hoisting ropes shall be the rated capacity load plus the load block weight divided by the number of rope parts, and shall not exceed 20 percent of the certified breaking strength of rope. Hoisting ropes shall be secured to hoist drum so that no less than two wraps of rope remain at each anchorage of hoist drum at the extreme low position (limit switch stop).

2.3.4 Sheaves

Sheaves shall be of cast, forged, rolled, or welded structural steel. Sheave grooves shall be accurately machined, smoothly finished and free of surface defects.

2.3.5 Hoist Drums

Hoist drums shall be of welded rolled structural steel, cast steel, or seamless steel pipe. Drums shall be machined and provided with right-hand and left-hand grooves to take the full run of cable for the required lift without overlapping, plus a minimum of two full wraps of cable when load is on floor. At least one groove shall remain unused when hook is at the highest position. Drum grooves shall be cut from solid stock and have

sufficient depth for size of cable required. Drum flanges shall be guarded so that the cable cannot wedge between drum flange and hoist frame.

2.3.6 Gearing

Gearing shall be of the enclosed gear reducers type. Gears and pinions shall be spur, helical, or herringbone type only, and shall be forged, cast or rolled steel; open-type gearing is not acceptable. Gears and pinions shall have adequate strength and durability for the crane service class and shall be manufactured to AGMA 2001 Quality Class 6 or better precision per AGMA 2000.

2.3.6.1 Gear Reducers

Gear reducers shall be standard items of manufacturers regularly engaged in the design and manufacture of gear reducers for Class D and G cranes or shall be integral components of standard hoists or hoist/trolley units of manufacturers regularly engaged in the design and manufacture of hoists or hoist/trolley units for Class A, B or C cranes. Gear reducers shall be designed, manufactured and rated in accordance with AGMA 6010, or AGMA 6009 (for trolley drives only), as applicable. Except for final reduction, the gear reduction units shall be fully enclosed in oil-tight housing. Gearing shall be designed to AGMA standards and shall operate in an oil bath. Operation shall be smooth and quiet.

2.3.6.2 Open Gearing

All gears and pinions shall have adequate strength and durability for the crane service class and manufactured to AGMA 2001 quality class 6 or better precision per AGMA 2000. Open gears shall be enclosed with safety guards provided with openings with covers for inspection and access for grease lubrication.

2.3.7 Brakes

Brakes shall be of the shoe, disc, or conical type with thermal capacity suitable for class and service specified in this section. Shoe, disc, and conical brakes shall be spring-set and electrically-released by a continuously rated direct acting magnet. Brakes shall be self-aligning and provide for easy adjustment for torque setting and lining wear. Brake lining material shall be asbestos free. Brake wheels shall be cast iron conforming to ASTM A 159 or shall be the manufacturer's standard high-strength ductile cast-iron, provided that the material exhibits wear characteristics in the form of powdered wear particles and is resistant to heat-checking. Disc brakes shall be totally enclosed and have multiple discs with stationary releasing magnets. Brake torque shall be easily adjustable over a 2:1 torque range.

2.3.7.1 Hoist Holding Brakes

Each hoist shall be equipped with at least 2 holding brakes. Holding brake shall be disc, shoe, or conical design, applied to one of the following: motor shaft or gear reducer shaft or rope drum. Braking system shall be designed to have zero hook lowering motion when a raise motion is initiated. Primary brake shall be a spring-set, electrically-released, disc, shoe, or conical type brake. Brake shall have a minimum torque rating of 150 percent of motor torque. Brake shall be capable of holding the rated load with zero hook drift. Primary brake shall be automatically set when controls are released or when power is interrupted. Provisions

shall be made to facilitate easy brake adjustment. Hoists shall be furnished with mechanical-control braking or a power-control braking system. Typical power means include dynamic lowering, eddy-current braking, counter-torque, regenerative braking, variable frequency, and adjustable or variable voltage.

2.3.7.2 Hoist Control Brake

Each hoist shall be provided with electrically-controlled braking system to prevent overspeeding.

2.3.7.3 Trolley Brake

Trolley braking system shall be provided with spring-applied and electrically-released shoe, disc, or conical brakes. Braking system shall be automatically set when controls are released or power is interrupted. Provisions shall be made to facilitate easy brake adjustment. Brakes shall have a torque rating of at least 50 percent of trolley drive motor rated torque.

2.3.7.4 Bridge Brakes

Bridge braking system shall be provided with a spring-applied and electrically-released single shoe, disc, or conical brake for each bridge drive motor. Braking system shall be automatically set when controls are released or power is interrupted. Provisions shall be made to facilitate easy brake adjustment. Brakes shall have a torque rating of at least 50 percent of bridge drive motor rated torque.

2.3.8 Wheels

Wheels shall be manufactured of rolled or forged steel. Bridge and trolley wheels shall be double-flanged. Trolley wheels shall have straight treads. Bridge wheels shall have straight treads. Wheels shall be equipped with self-aligning double-row spherical roller-bearings of capacity as recommended by bearing manufacturer for design load of trolley or bridge.

2.3.9 Bearings

Bearings shall be antifriction type, except bearings which are subject only to small rocker motion. Equalizer sheaves shall be equipped with sintered oil-impregnated type bushings in accordance with ASTM B 438/B 438M, ASTM B 439, or ASTM B 612.

2.3.10 Anti-Drip Provisions

Cranes shall be designed to preclude leakage of lubricants onto the lifted loads or the floor. Equipment and components which cannot be made leak-proof shall be fitted with suitable drip pans. Drip pans shall be manufactured of steel and designed to permit removal of collected lubricant.

2.3.11 Lubrication System

Splash-type oil lubrication system shall be provided for hoist, trolley and bridge gear cases; an oil pump shall be used on vertical-mounted gear cases exceeding two reductions. Oil pumps shall be the reversible type capable of maintaining the same oil flow direction and volume while being driven in either direction. Electric motor-driven pumps may be used when input shaft

speed is too low at any operating condition to ensure adequate oil flow. In such applications, pump shall be energized whenever drive mechanism brakes are released.

2.3.12 Electrically Driven Oil Pump Alarm

If an electric-driven lubricating pump is used, an audible alarm and red indicating light shall be provided and shall be energized in the event of pump malfunction.

2.4 ELECTRICAL COMPONENTS

2.4.1 Control Systems

A separate controller shall be provided for each motor; however, a duplex controller shall be used for two motor bridge drives. Overload protection shall be in conformance with the requirements of NEMA ICS 2. Contactors that are used for starting, stopping, and reversing shall be mechanically and electrically interlocked.

2.4.1.1 Hoist Control System

Main hoist motion control system shall be single speed, with ac magnetic control of ac squirrel cage motor. Control shall provide for reversing, and for a mechanical load brake.

2.4.1.2 Travel Motion Control System

Bridge and trolley motion control system shall be single speed with ac magnetic control of squirrel cage motors.

2.4.1.3 Drive Control System

The main hoist, trolley and bridge micro-drive control systems shall be ac magnetic, single speed, reversing.

2.4.2 Power Sources

2.4.2.1 System Supply Voltage

Cranes shall be designed to be operated from a 415 volt, three-phase, 50 Hz, alternating current system power source. Energy isolating devices for such machine or equipment shall be designed to accept a lockout device in accordance with NFPA 70.

2.4.2.2 Transformers

Transformers shall be dry type and shall carry full load continuously at rated voltage and frequency without exceeding an average temperature rise of 115 degrees C above an ambient temperature of 40 degrees C. The transformer shall have a totally enclosed case which shall be finished with manufacturer's standard coating system. Transformers shall be fully encapsulated, except for those specifically designed for use as an isolation transformer for static power conversion units.

2.4.2.3 Power Rectifiers

Power rectifiers shall be provided where required to convert ac to dc. Active semiconductor devices shall be silicon type. Rectifiers for motor

control system shall be three-phase full wave rectifiers. Rectifiers for brakes shall be single-phase full-wave or three-phase full-wave rectifiers. A single rectifier may be used in lieu of several smaller rectifiers; brakes shall be supplied from a different rectifier than the other equipment. Protective enclosures shall conform to the requirements of NEMA ICS 6 Type 1. Rectifying elements shall be hermetically-sealed and mounted on heat sinks cooled by natural convection or by mechanical means. Minimum protection for rectifiers shall consist of transient surge suppressors, and 100,000 AIC current-limiting 700V rectifier type fuses in the ac line. Minimum protection for main power rectifiers shall include a line isolation transformer of the type specifically designed for use with static conversion units. Individual diode sets and thyristors shall be protected by fuses on the ac side. Each rectifier bridge used in brake circuits (including overload protection) shall be rated for continuous-duty at a minimum of 150 percent of load rating, and for 1 minute at a minimum of 300 percent of load rating. Each rectifier or SCR bridge used in the dc constant potential control system shall be rated for continuous-duty at a minimum of 100 percent of the load rating, and for one minute at a minimum of 200 percent of load rating following 8 hours at 100 percent load. The dc rated output voltage shall not exceed 460 volts.

2.4.3 Motors

2.4.3.1 General Requirements

Motors shall be designed specifically for crane and hoist duty. Drain holes shall be provided at low points near each end. Inspection and service covers shall be provided with gaskets. Hardware shall be corrosion-resistant. Motors shall conform to the requirements of NFPA 70, NEMA MG 1 and UL 1004. Motor heaters shall be energized when mainline contactor is de-energized, and water heaters shall be de-energized when mainline contactor is de-energized. Motors 15 kW and larger shall be provided with a suitable heater to prevent condensation during long periods of inactivity. One thermal sensitive device embedded in hoist motor windings shall be provided. Device and associated circuitry shall serve as an alarm activating an amber signal or pilot light visible to control stations when motor temperatures become excessive. Set point shall be set below the Class B insulation temperature limit. Thermal-sensitive device and associated circuits shall be self-restoring (automatic reset). Two-speed, two-winding motors with a solid-state control will not be allowed for creep-speed use.

2.4.3.2 Main Motor

Hoist motor shall be dc crane type single-speed; single-winding NEMA design D squirrel cage ac type.

2.4.3.3 Bridge and Trolley Drive Motors

Bridge and trolley drive motors shall be ac crane type single-speed; single-winding NEMA design B squirrel cage ac type rated.

2.4.3.4 Motor Enclosures

Motor enclosures shall be totally enclosed, non-ventilated (TENV).

2.4.3.5 Hoist Motor Insulation and Time Rating

Hoist motors shall be provided with insulation which has a Class H rating

based on an 125 degree C motor temperature rise above 40 degrees C ambient, with frame size selection based on continuous ratings.

2.4.3.6 Bridge and Trolley Motor Insulation and Time Rating

Bridge and trolley drive motors shall be provided with an insulation which has a Class H rating based on 125 degrees C motor temperature rise above 40 degree C ambient with frame size selection based on continuous rating.

2.4.3.7 Micro-Motors

Micro-motors for main hoist bridge and trolley drives shall be industrial type, single-speed; single-winding; ac squirrel cage motor operation and shall conform to the requirements of NEMA MG 1. Micro-motor shall be totally enclosed, fan cooled (TEFC), with Class H insulation. Motor voltage rating shall comply with system supply voltage rating specified.

2.4.4 Control System

A separate controller shall be provided for each motor; a duplex type for 2-motor bridge drives and a quadraplex type for 4-motor bridge drives on ac central cranes. When 2-motor bridge drives are furnished and dc magnetic control is required, dc series-connected motors shall be provided. When 4-motor bridge drives are furnished and dc magnetic control is required, dc series-parallel connected motors shall be provided. Overload protection shall be in conformance with requirements of NEMA ICS 2 and NFPA 70. When contactors are used for starting, stopping and reversing, contactors shall be mechanically and electrically interlocked.

2.4.4.1 Control Panels

Control panels shall be fabricated of solid sheet steel designed and constructed to conform to requirements of NEMA ICS 6 Type 1. Control panel doors shall be hinged, equipped with gaskets and fitted with key-lock handle design, complete with a single key to open all locks.

2.4.4.2 Main and Auxiliary Hoist Control

Hoist motor control system shall provide one speed in each direction with an electrically-operated, full-magnetic, across-the-line reversing type starter. Speed contactors shall be used to prevent the operation of high speeds and low speeds.

2.4.4.3 Bridge and Trolley Control

Bridge and trolley main control systems shall provide one speeds in each direction with an electrically-operated, full-magnetic, across-the-line reversing type starter.

2.4.4.4 Drift Point

Trolley and bridge main control systems shall have a drift point between OFF and first speed control point in each direction or shall have a separate pushbutton.

2.4.4.5 Micro-Drive Motor and Clutch Control

Micro-drive system shall be designed such that when micro-drive is selected at control station, all main motors shall be disconnected, and all

micro-drive clutches shall be energized. Operation of micro-drive motors shall be from crane control station. Micro-motor control systems shall provide single-speed in each direction by means of an electrically-operated, full-magnetic, full voltage type starter. Power shall not be applied to any micro-motor unless all clutches are fully engaged. If a clutch disengages during operation of micro-motors, the mainline contactors shall open and all brakes shall set. Application of power to any main motor shall be prevented with any clutch engaged. A transfer switch shall be provided at crane control station to allow transfer from either mode of operation to the other only when all brakes have been set for not less than 5 seconds. A single CLUTCH-ENGAGED green pilot light shall be provided at the pendant station when all clutches are energized; individual CLUTCH ENGAGED pilot lights shall be provided on drive control panels.

2.4.5 Pendant Control Station

2.4.5.1 General

Pendant control station enclosure shall be NEMA Type 1. Physical size of pendant shall be held to a minimum. A separate cable of corrosion-resistant chain consisting of minimum 6.4 mm wire shall be provided. Pendant station shall be attached to underside of crane bridge and shall hang vertically with bottom of pendant at 1 m above floor. Weight of pendant shall not be supported by control cable.

2.4.5.2 Operating Pushbuttons

Operating pushbuttons shall be heavy-duty, dust-and-oil-tight type with distinctly-felt operating positions which meet requirements of NEMA ICS 2. Pendant control buttons shall be momentary pushbuttons. Pushbuttons (except the POWER-OFF button) shall be the recessed type to avoid accidental operation. Diameter of buttons shall be a size which will make operation possible with a thumb while holding the pendant with same hand. Nameplates shall be provided adjacent to each pushbutton. Barriers shall be provided on pendant between various pushbutton functions, except on elements mounted in junction box. In a multi-speed application, dual-position pushbuttons shall have a definite click-detent position for each speed. Pushbuttons shall be designed and manufactured not to hang up in control case. Pendant shall include a separate set of pushbuttons for each motion and for POWER-ON POWER-OFF. Pushbuttons shall be as follows:

POWER-OFF.
POWER-ON.
Hoist-up.
Hoist-down.

2.4.5.3 Light Indicators

Pilot lights shall meet heavy-duty requirements of NEMA ICS 2. One amber pilot light to indicate excessive hoist motor temperature shall be provided on pendant station. A blue pilot light shall be provided to indicate that the main contactor is energized, and a white pilot light to indicate that power is available on the load side of crane disconnect switch. A bright red mushroom head shall be provided with the POWER-OFF pushbutton. A 2-position selector switch shall be provided to select between normal and micro-drive. A single green pilot light shall be provided to indicate all micro-drive clutches are engaged.

2.4.5.4 Pendant Drive Control

A 3-position momentary contact spring-return to OFF toggle switch shall be provided to control the motorized trolley for pendant.

2.4.6 Protection

2.4.6.1 Main Line Disconnect

A main line disconnect consisting of a combination circuit breaker (50,000 AIC) and non-reversing starter, starter without overloads (mainline contactor) in NEMA Type 1 enclosure shall be provided. Mainline disconnect shall be controlled by a control circuit so that all crane motions will be stopped upon mainline undervoltage, overload, control circuit fuse failure, or operation of POWER OFF pushbutton. Mainline disconnect shall be equipped with energy isolating devices designed to accept lockout devices.

2.4.6.2 Isolation Transformer

The isolation transformer shall be an SCR drive type specifically designed for cranes, with a continuous rating which will exceed that required of the sum of rated full-load full-speed KVA of hoist plus 50 percent of rated full-load full-speed KVA of trolley and bridge motors plus the rated KVA of controls. Total KVA is then multiplied by 1.05 (efficiency factor). The isolation transformer shall be connected to load side of mainline disconnect of the transformer. Crane dc static control electric power distributed on the crane shall be supplied through this isolation transformer.

2.4.6.3 Surge Protection

Surge suppressors shall meet the requirements of UL 1449. Three metal oxide varistors shall be provided on the line side of each SCR drive isolation transformer to provide transient over-voltage protection.

2.4.6.4 Circuit Breakers

Circuit breakers shall meet the requirements of UL 489.

2.4.6.5 Overloads

Alternating current circuit overload relays shall be of the ambient compensated, automatic reset, inverse time type located in all phases individual motor circuits. Overload relays shall be arranged to de-energize the associated motor on an overload condition.

2.4.7 Limit-Switches

Geared limit-switches shall be heavy-duty quick-break double-pole double-throw type conforming to NEMA ICS 2. The geared limit-switch interruption of a motion in one direction shall not prevent the opposite motion. Geared limit-switches shall reset automatically. Limit-switch housings shall be NEMA Type 1. Limit-switches shall interrupt power to the primary and micro-drive control systems.

2.4.7.1 Hoist Upper Limit-Switches

Two limit-switches shall be provided for each hoist. A rotating-type adjustable geared-control circuit interrupt limit-switch shall provide

hoist-up limiting. A secondary hoist-upper-limit shall be provided with a weight-operated power circuit limit-switch to prevent the hoist from raising beyond the safe limit. The secondary limit-switch shall operate to interrupt power to all hoist motor conductors, set the hoist holding brakes and directly open all "raise" power circuits.

2.4.7.2 Hoist Lower Limit-Switches

Hoists shall be provided with a rotating-type adjustable geared-control circuit interrupt limit-switch for hoist-down travel limiting. The hook downward vertical travel of the hook shall be field-adjustable to approximately 150 mm above working surface.

2.4.7.3 Bridge and Trolley Travel Limit-Switches

Runway (track-type) limit-switches shall be provided for crane bridge and trolley motions to stop the bridge and trolley motions, respectively. Limit-switch actuators shall be installed on building and trolley frame to actuate the limit-switches and stop the crane bridge or trolley prior to contacting the trolley frame bumpers. Trip mechanism for trolley motion shall be located on crane runway to trip the switch before the bumper contacts the stop. Trip mechanism for bridge motion shall be located on crane runway to trip switch before bumper contacts the stop. When the switch is tripped, the switch shall permit opposite travel in the direction of stop and then automatically reset.

2.4.7.4 Rail Clamp Limit-Switches

When rail clamps are set, each rail clamp shall be furnished with a limit-switch designed to interrupt the primary and micro-drive control circuits to bridge drive. A red pilot light shall be provided at control station to indicate the rail clamps are set.

2.4.8 Wiring

Wiring shall comply with Article 610 of NFPA 70. Wires shall be numbered or tagged at connection points. Splices shall be made in boxes or panels on terminals boards or standoff insulators. Motor loop, branch circuit and brake conductor selection shall be based on NFPA 70 for 90 degree C conductor rating on indoor cranes, and for 75 degree C conductor rating on outdoor cranes. Conductors in the vicinity of resistors and conductors connected to resistors shall be Type 5RML.

2.4.9 Electrification

2.4.9.1 Main Power Electrification

Main power electrification system shall provide power to crane starter/disconnect circuit breaker.

2.4.9.2 Crane Runway Conductors

Crane runway conductor system shall be the covered conductor bar system type designed and manufactured to meet UL requirements. Protective covers shall be the rigid or flexible self-closing type designed to cover all live conductors and shall be shaped to prevent accidental contact with conductors. Collectors shall be heavy-duty sliding shoe type compatible with the electrification system. Two tandem designed collector heads shall be provided for each conductor rail to provide redundancy.

2.4.9.3 Bridge Span Conductors

Bridge span conductor system shall be the rigid conductor/collector type located within enclosure. Cable loops shall not drop below the hook high position. Outdoor crane bridge festoon system hardware shall be corrosion resistant.

2.4.9.4 Pendant Festoon System

Pendant festoon system shall consist of a support rail, cables, junction boxes, cable cars and accessories. Cable loops shall not drop below the hook high position. Pendant control car shall be provided with NEMA Type 1 junction box. Pendant festoon shall be towed by trolley . Outdoor crane pendant festoon system hardware shall be corrosion resistant.

2.4.9.5 Pendant Drive System

Pendant festoon system shall be provided with a motor-drive system capable of driving the pendant control car per manufacturer's design. Pendant motor drive shall be controlled from the pendant.

2.4.10 Special Requirements

2.4.10.1 Warning Horn

A solid-state electronic warning horn shall be provided on the crane. Any bridge or trolley motion shall be accompanied by a continuous series of alternating tones. The warning horn shall not sound when the crane is in the micro-drive mode.

2.4.10.2 Electrically-Driven Oil Pump Alarm

Electrically-driven lubricating pump shall be complete with an audible alarm and red light for indication of pump malfunction. Location of alarm shall be the factory standard location.

2.4.11 Load-Limit System

A load-limit visual/audible system shall be provided for the main hoist to inform the operator that the preset load has been exceeded. The load-limit system shall consist of a load-cell, load-sensing electronics, overload indicator lights, overload alarm bell and alarm cut-out switch. Load cell shall be mounted to receive the load from equalizing sheave pin or upper block sheave pin. The alarm setpoint shall be adjustable.

2.4.11.1 Load-Sensing Electronics

Load-sensing electronics shall be NEMA Type 3R enclosures. Alarm setpoint shall be adjustable.

2.4.11.2 Alarm and Indicator Light

An overload alarm light shall be provided to indicate a load greater than the preset maximum. Overload alarm shall be indicated with a red light and clearly labeled "OVERLOAD". A bell shall be provided to indicate when an overload condition exists. Provision shall be made to turn off the bell.

2.4.12 Fungus Resistance

Electrical connections such as terminal connections, circuit connections, components and circuit elements shall be coated with fungus-resistant varnish. Components and elements inherently inert to fungi or hermetically sealed shall not be treated. Elements whose operation will be adversely affected with the application of varnish shall not be treated.

2.5 ELECTROMAGNETIC INTERFERENCE SUPPRESSION

2.5.1 Shielded Cable

Pendant and festooned cables shall be the shielded type of braided tinned-copper. Each cable shielding shall be grounded with a single connection to equipment grounding conductor.

2.5.2 EMI/RFI Shielded Boxes

2.5.2.1 General

Boxes designed to house electronic and electrical control equipment, instruments, metering equipment, etc., in installations where electromagnetic compatibility and/or system security is required shall protect interior components from stray radio frequency (RF) fields and shall contain RF signals produced by interior components.

2.5.2.2 Construction

Electromagnetic Interference/Radio Frequency Interference (EMI/RFI) shielded boxes shall be designed to meet UL 50 Type 12 and Type 13. The shielded boxes shall be constructed of 1.897 mm steel with seams continuously welded and ground smooth, without holes and knockouts. Cover gasket shall be a combination of woven plated steel mesh and oil-resistant gasket which will provide an EMI/RFI seal as well as an oil-tight, dust-tight and water-tight seal between cover and body. Gasket shall be attached to cover with oil-resistant adhesive. Stainless steel cover clamps and screws which are quick and easy to operate shall be provided on three sides of hinged cover for positive clamping.

2.5.2.3 Attenuation

EMI/RFI shielded boxes shall be designed to provide maximum shielding of electric and magnetic components of radiated RF energy. RF filters shall be provided to suppress conducted radio frequency in cables and conductors. Shielded boxes shall provide attenuation greater than 60 db at 14.5 KHz to greater than 100 db at 1 MHz for magnetic fields and greater than 100 db from 14.5 KHz to 430 MHz for electric fields.

2.5.2.4 Finish

EMI/RFI shielded boxes shall be zinc-plated in accordance with ASTM B 633 SC3/Type II to provide corrosion-resistant conductive surfaces for gasket contact area and conduit entries. The finish coat shall match the crane finish.

2.5.3 Drum Grounding

A copper ring/collector assembly shall be provided to ground each drum. Ring shall be electrically-bonded to drum. Collector shall be stationary

and connected to equipment grounding conductor system with a No. 8 AWG copper wire.

PART 3 EXECUTION

3.1 ERECTION

The entire crane erection shall be performed in accordance with manufacturer's instructions under the full-time supervision of the manufacturer's representative. Contractor shall provide a written certificate from crane manufacturer indicating the crane is erected in accordance with manufacturer's recommendations before testing the completed installation.

3.1.1 Shop Assembly

Major crane components shall be shop assembled as completely as possible. Disassembled parts shall be match marked and electrical connections tagged after complete no-load shop testing. Parts and equipment at site shall be protected from weather, damage, abuse and loss of identification. Erection procedures shall ensure that the crane is erected without initial stresses, forced or improvised fits, misalignments, nicks of high-strength structural steel components, stress-raising welds and rough burrs. Damaged painted surfaces shall be cleaned and repainted after crane is erected. All necessary grease and oil of approved quality and grade for the initial servicing and field test shall be provided by the Contractor.

3.1.2 Mechanical Alignment

Motors, couplings, brakes, gear boxes and drive components shall be aligned when reinstalled in accordance with manufacturer's instructions.

3.1.3 Electrical Alignment

Control system shall be aligned in accordance with manufacturer's instructions. A copy of the final alignment data shall be stored in control panel door and shall include but not be limited to timer settings, resistor tap settings, potentiometer settings, test-point voltages, supply voltages, motor voltages, motor currents and test conditions such as ambient temperature, motor load, date performed and person performing the alignment.

3.1.4 Welding

Welders, welding operations and welding procedures shall be qualified or prequalified in accordance with AWS D14.1. Welding shall be performed indoors and the surface of parts to be welded shall be free from rust, scale, paint, grease or other foreign matter. Minimum preheat and interpass temperatures shall conform to the requirements of AWS D14.1. Welding shall be performed in accordance with written procedures which specify the Contractor's standard dimensional tolerances for deviation from camber and sweep. Such tolerances shall not exceed those specified in accordance with AWS D14.1. Allowable stress ranges shall be in accordance with CMAA 70. Welding of girders and beams shall conform with AWS D14.1.

3.1.5 Field Painting

Painting required for surfaces not otherwise specified, and finish painting of items only primed at the facility, shall be as specified in Section 09900

PAINTS AND COATINGS. Bridge crane including bridge, trolley, hoist and all attached items shall be painted in accordance with the manufacturer's standard practice. The complete crane shall be of one color. Bridge rail, supports and bracing shall be painted in accordance with Section 09900 PAINTS AND COATINGS. Items such as surfaces in contact with the rail wheels, wheel tread, hooks, wire rope, surfaces on the electrical collector bars in contact with the collector shoes and nameplates shall not be painted. The requirements of explosion proof cables shall be coordinated with cable manufacturer.

3.2 ACCEPTANCE TESTING

3.2.1 General

Contractor shall provide all personnel necessary to conduct the required testing which shall include but not be limited to crane operators, riggers, rigging gear and test weights. Testing shall be performed in the presence of Contracting Officer or his designated representative. Contractor shall notify Contracting Officer 14 days prior to testing operations. Contractor shall operate all equipment and make all necessary corrections and adjustments prior to the testing operations witnessed by Contracting Officer. A representative of the Contractor responsible for procuring and installing hoist equipment shall be present to direct the field testing. Test loads shall be compact and permit a minimum of 50 percent of vertical lift. Test loads shall be minus 0 percent to plus 5 percent of the required weight, and shall be verified prior to testing. Test weights required shall be per manufacturer's recommendations. Operational testing shall not be performed until after building interior has been painted. Three copies of all test reports shall be furnished to Contracting Officer.

3.2.1.1 Test Sequence

Crane shall be tested in accordance with applicable paragraphs of this procedure in the sequence provided.

3.2.1.2 Test Data

Operating and startup current measurements shall be recorded for coils, hoist, trolley, and bridge motors using the appropriate instrumentation. Speed measurements shall be recorded as required by facility evaluation tests (normally at 100 percent load). Recorded values shall be compared with design specifications or manufacturer's recommended values and the abnormal differences shall be justified in the remarks or appropriate adjustments performed. The high temperatures or abnormal operation of any equipment or machinery shall be noted, investigated and corrected. Hoist, trolley and bridge speeds shall be recorded during each test cycle.

3.2.1.3 Equipment Monitoring

Improper operation or poor condition of safety devices, electrical components, mechanical equipment and structural assemblies shall be monitored during the load test. Defects observed to be critical during the testing period shall be reported immediately to the Contracting Officer and the testing operations shall be suspended until the defects are corrected. During each load test and immediately following each load test, the following inspections shall be made:

a. Inspect for evidence of bending, warping, permanent deformation, cracking or malfunction of structural components.

b. Inspect for evidence of slippage in wire rope sockets and fittings.

c. Check for overheating in brake operation; check for proper stopping. All safety devices including emergency stop switches and POWER-OFF pushbuttons shall be tested and inspected separately to verify proper operation of the brakes. When provided, safety accessories including warning horn, lighting, gauges, warning lights and accuracy of wind indicating device and alarm shall be inspected.

d. Check for abnormal noise or vibration and overheating in machinery drive components.

e. Check wire rope sheaves and drum spooling for proper reeving and operation, freedom of movement, abnormal noise or vibration.

f. Check electrical drive components for proper operation, freedom from chatter, noise, overheating, and lockout/tagout devices for energy isolation.

g. Inspect gears for abnormal wear patterns, damage, or inadequate lubrication.

h. Verify that locations of crane capacity plates are visible from pendant operator's position.

3.2.1.4 Hooks

Hooks shall be measured for hook throat spread before and after load test. A throat dimension base measurement shall be established by installing two tram points and measuring the distance between the tram points to within 0.4 mm . This base dimension shall be recorded. Distance between tram points shall be measured before and after load test. An increase in throat opening by more than 1 percent from base measurement shall be cause for rejection.

3.2.2 No-Load Testing

3.2.2.1 Hoist Operating and Limit Switch Test

Load hook shall be raised and lowered through the full range of normal travel at rated speed and other crane speeds. Load hook shall be stopped below the geared limit-switch upper setting. In slow speed only, proper operation of upper and lower limit-switches for primary and micro-drive motions shall be verified. The test shall be repeated a sufficient number of times (minimum of 3) to demonstrate proper operation. Brake action shall be tested in each direction. Proper time-delay shall be verified between the actuation of dual brakes.

3.2.2.2 Trolley Travel

Trolley shall be operated the full distance of bridge rails exercising all primary drive speed controls in each direction. Brake operation shall be verified in each direction. In slow speed, trolley bumpers shall contact trolley stops located on the bridge girders. In slow speed the proper operation (interrupt power, automatic reset) of the trolley limit-switches at both limits of trolley motion shall be tested.

3.2.2.3 Bridge Travel

Bridgeshall be operated in each direction the full distance of runway exercising all primary drive speed controls. Brake operation shall be verified in each direction. In slow speed the proper operation (interrupt power, automatic reset) of the bridge limit-switches at both limits of bridge motion shall be tested. In slow speed or micro-drive the crane bridge bumpers shall contact the runway rail stops.

3.2.2.4 Hoist Loss of Power No-Load Test

Using the primary drive, hooks shall be raised to a height of approximately 3.5 m or less. While slowly lowering the hook the main power source shall be disconnected, verifying that the hook will not lower and that both brakes will set. Test shall be repeated using micro-drive controls.

3.2.2.5 Travel Loss of Power No-Load Test

With the hook raised to clear obstructions and trolley traveling in slow speed, the main power source shall be disconnected, verifying that the trolley will stop and the brake will set. Test shall be repeated for trolley using micro-drive speed. Test shall be repeated for bridge micro-drive and slow speed primary drive controls.

3.2.3 Load Test

3.2.3.1 Hoist

Unless otherwise indicated, the following tests shall be performed using a test load of 125 percent (plus 5 percent, minus 0 percent) of rated load.

a. Hoist Static Load Test: Holding brakes and hoisting components shall be tested by raising the test load approximately 300 mm and manually releasing one of the holding brakes. Load shall be held for 10 minutes. First holding brake shall be reapplied and second holding brake released. Load shall be held for 10 minutes. Any lowering that may occur indicates a malfunction of brakes or lowering components.

b. Dynamic Load Test: Test load shall be raised and lowered through the full range operating in each speed. Machinery shall be completely stopped at least once in each direction to ensure proper brake operation.

c. Hoist Mechanical Load Brake: With test load raised approximately 1.5 m and with the hoist controller in the neutral position, holding brake shall be released. Mechanical load brake shall be capable of holding the test load. With holding brake in released position, test load shall be lowered (first point) and the controller shall be returned to OFF position as the test load lowers. Mechanical load brake shall prevent the test load from accelerating.

d. Hoist Loss of Power Test: After raising test load to approximately 2.5 m , slowly lowering the test load, the main power source and control pushbutton shall be released verifying that the test load will not lower and that both brakes will set. Test shall be repeated using micro-drive controls.

e. Trolley Dynamic Load Test: While operating the trolley the full distance of bridge rails in each direction with test load on the hook (one cycle), proper functioning of all primary drive and micro-drive speed control points and proper brake action shall be tested.

f. Bridge Dynamic Load Test: With test load on hook, bridge shall be operated for the full length of runway in both directions with trolley at each extreme end of bridge. Proper functioning of all primary drive and micro-drive speed control points and brake action shall be verified. Binding of the bridge end trucks shall indicate malfunction.

3.2.3.2 Trolley and Bridge Loss of Power Test

A test load of 100 to 105 percent of rated load shall be raised clear of any obstructions on operating floor. Starting at a safe distance from walls or other obstructions, a slow speed shall be selected using the trolley and bridge primary drive. While maintaining a safe distance to obstructions, the main power source shall be disconnected and brakes shall be verified to have set and that the equipment stops within the distance recommended by manufacturer.

3.2.4 Overload Tests

After the operational tests, bridge crane system and all functions of bridge crane shall be tested at 125 percent of rated load.

3.2.5 Acceleration and Deceleration Tests

The acceleration and deceleration of bridge and trolley shall be tested with approximately 10 percent of rated load at lowest possible location of hook. Bridge and trolley shall be operated to run up to high speed and then stopped without jarring or swinging the load.

3.2.6 Grounding Test

Hoist shall be tested to determine that the hoist, including hook and pendant, are grounded to building during all phases of hoist operation. The grounding of bridge and trolley shall be tested with approximately 10 percent of rated load on hook. Grounding shall be tested between hoist hook and the structure's grounding system.

3.2.7 Adjustments and Repairs

Adjustments and repairs shall be performed by Contractor under the direction of the Contracting Officer at no additional cost to the Government, until satisfactory conditions are maintained, and contract compliance is affected. After adjustments are made to assure correct functioning of the components, pertinent testing shall be repeated.

3.3 SCHEMATIC DIAGRAMS

Schematic diagrams for equipment shall be stored where indicated on drawings.

3.4 MANUFACTURER'S FIELD SERVICE REPRESENTATIVE

Contractor shall furnish a qualified experienced manufacturer's field

service representative to supervise the crane installation, assist in the performance of the on site testing, and instruct personnel in the operational and maintenance features of the equipment.

3.5 FIELD TRAINING

Contractor shall conduct a training course for the operating staff. Training period shall consist of a total of 40 hours of normal working time and shall start after the system is functionally completed but prior to final acceptance. Course instructions shall cover pertinent points involved in operating, starting, stopping, and servicing the equipment, including all major elements of the Operation and Maintenance Manuals. Course instructions shall demonstrate all routine maintenance operations such as lubrication, general inspection, and system trouble shooting repair. Contracting Officer shall be given at least 2 weeks advance notice of field training.

3.6 SPARE PARTS

One set of manufacturer's recommended spare parts shall be furnished and delivered to the site. The spare parts shall be suitably packaged for long-term protection and storage. The packaging shall be legibly labeled to identify the spare parts. A list of the furnished spare parts shall be included in the Maintenance manual.

3.7 ACCEPTANCE

Final acceptance of crane system will not be given until Contractor has successfully completed all testing operations, corrected all material and equipment defects, made all proper operation adjustments, and removed paint or overspray on wire rope, hook and electrical collector bars.

-- End of Section --

SECTION 15050

BASIC MECHANICAL MATERIALS AND METHODS

PART 1 GENERAL

1.1 REFERENCES

The publications listed below form a part of this specification to the extent referenced. The publications are referred to in the text by the basic designation only.

ASTM INTERNATIONAL (ASTM)

ASTM B 117	(1997) Operating Salt Spray (Fog) Apparatus
ASTM D 2308	(1990) Standard Specification for Polyethylene Jacket for Electrical Insulated Wire and Cable

INSTITUTE OF ELECTRICAL AND ELECTRONICS ENGINEERS (IEEE)

IEEE Std 515	(1990) Recommended Practice for the Testing, Design, Installation, and Maintenance of Electrical, Resistance Heat Tracing for Industrial Applications

1.2 RELATED REQUIREMENTS

This section applies to all specification sections of Division 15, unless specified otherwise in the individual section.

1.3 QUALITY ASSURANCE

1.3.1 Material and Equipment Qualifications

Provide materials and equipment that are standard products of manufacturers regularly engaged in the manufacture of such products, which are of a similar material, design and workmanship. Standard products shall have been in satisfactory commercial or industrial use for 2 years prior to bid opening. The 2-year use shall include applications of equipment and materials under similar circumstances and of similar size. The product shall have been for sale on the commercial market through advertisements, manufacturers' catalogs, or brochures during the 2 year period.

1.3.2 Alternative Qualifications

Products having less than a two-year field service record will be acceptable if a certified record of satisfactory field operation for not less than 6000 hours, exclusive of the manufacturer's factory or laboratory tests, can be shown.

1.3.3 Service Support

The equipment items shall be supported by service organizations. Submit a certified list of qualified permanent service organizations for support of

the equipment which includes their addresses and qualifications. These service organizations shall be reasonably convenient to the equipment installation and able to render satisfactory service to the equipment on a regular and emergency basis during the warranty period of the contract.

1.3.4 Manufacturer's Nameplate

Each item of equipment shall have a nameplate bearing the manufacturer's name, address, model number, and serial number securely affixed in a conspicuous place; the nameplate of the distributing agent will not be acceptable.

1.3.5 Modification of References

In each of the publications referred to herein, consider the advisory provisions to be mandatory, as though the word, "shall" had been substituted for "should" wherever it appears. Interpret references in these publications to the "authority having jurisdiction", or words of similar meaning, to mean the Contracting Officer.

1.3.5.1 Definitions

For the International Code Council (ICC) Codes referenced in the contract documents, advisory provisions shall be considered mandatory, the word "should" shall be interpreted as "shall." Reference to the "code official" shall be interpreted to mean the "Contracting Officer." For Navy owned property, references to the "owner" shall be interpreted to mean the "Contracting Officer." For leased facilities, references to the "owner" shall be interpreted to mean the "lessor." References to the "permit holder" shall be interpreted to mean the "Contractor."

1.3.5.2 Administrative Interpretations

For ICC Codes referenced in the contract documents, the provisions of Chapter 1, "Administrator," do not apply. These administrative requirements are covered by the applicable Federal Acquisition Regulations (FAR) included in this contract and by the authority granted to the Officer in Charge of Construction to administer the construction of this project. References in the ICC Codes to sections of Chapter 1, shall be applied appropriately by the Contracting Officer as authorized by his administrative cognizance and the FAR.

1.4 DELIVERY, STORAGE, AND HANDLING

Handle, store, and protect equipment and materials to prevent damage before and during installation in accordance with the manufacturer's recommendations, and as approved by the Government. Replace damaged or defective items.

1.5 ELECTRICAL REQUIREMENTS

Furnish motors, controllers, disconnects and contactors with their respective pieces of equipment. Motors, controllers, disconnects and contactors shall conform to and have electrical connections provided under Section 16402, "Interior Distribution System." Furnish internal wiring for components of packaged equipment as an integral part of the equipment. Extended voltage range motors will not be permitted. Controllers and contactors shall have a maximum of 220 volt control circuits, and shall have auxiliary contacts for use with the controls furnished. When motors

and equipment furnished are larger than sizes indicated, the cost of additional electrical service and related work shall be included under the section that specified that motor or equipment. Power wiring and conduit for field installed equipment shall be provided under and conform to the requirements of Section 16402, "Interior Distribution System."

1.6 INSTRUCTION TO GOVERNMENT

When specified in other sections, furnish the services of competent instructors to give full instruction to the Government in the adjustment, operation, and maintenance, including pertinent safety requirements, of the specified equipment or system. Instructors shall be thoroughly familiar with all parts of the installation and shall be trained in operating theory as well as practical operation and maintenance work.

Instruction shall be given during the first regular work week after the equipment or system has been accepted and turned over to the Government for regular operation. The number of man-days (8 hours per day) of instruction furnished shall be as specified in the individual section. When more than 4 man-days of instruction are specified, use approximately half of the time for classroom instruction. Use other time for instruction with the equipment or system.

When significant changes or modifications in the equipment or system are made under the terms of the contract, provide additional instruction to acquaint the operating personnel with the changes or modifications.

1.7 ACCESSIBILITY

Install all work so that parts requiring periodic inspection, operation, maintenance, and repair are readily accessible. Install concealed valves, expansion joints, controls, dampers, and equipment requiring access, in locations freely accessible through access doors.

PART 2 PRODUCTS

2.1 ELECTRICAL HEAT TRACING FOR PIPING SYSTEMS

Heat trace systems for pipes, valves, and fittings shall be in accordance with IEEE Std 515 and shall be UL listed. System shall consist of all necessary components, including heaters and controls to prevent freezing.

Self-regulating heaters shall consist of two tinned-copper bus wires embedded in a self-regulating, irradiation cross linked, polymer core that varies its power output to respond to temperature along its length. Heater shall be able to be crossed over itself without overheating. The installation shall be approved before use directly on plastic pipe. Heater shall be covered by a thermoplastic inner jacket bonded to the core, a thermoplastic elastomer outer jacket, and a flouropolymer overjacket for mechanical and chemical protection, in accordance with ASTM D 2308.

Heater shall have a self-regulating factor of at least 90 percent, in order to provide energy conservation and to prevent overheating.

Heater shall operate on line voltages of 220 volts without the use of transformers.

Heater shall be sized according to the following table:

Pipe Size (DN) (Millimeter Diameter)	Minus 23 degrees C
80 or less	16 watts per meter (wpm)
100	16 wpm

System shall be controlled by an ambient sensing thermostat set at 10 degrees C either directly or through an appropriate contactor.

Thermostats shall have a minimum range of -4 to 60 degrees C, with contacts rated at 220 volts, 20 amperes minimum for each heated pipe.

A control panel shall be furnished for each heat tracing system. Voltage monitoring panel to continually monitor the supply voltage for each circuit and alarm on loss of voltage supply. Alarm to operate on ground fault when used with ground fault breakers. Alarm indication by scanning digital display and relay activation. Display to indicate the status and proper functioning of each circuit. Panel to include alarm silence and alarm reset switches. Power to operate panel to be 220/50hz. Relay contacts to be rated for 220 vac.

PART 3 EXECUTION

3.1 PAINTING OF NEW EQUIPMENT

New equipment painting shall be factory applied or shop applied, and shall be as specified herein, and provided under each individual section.

3.1.1 Factory Painting Systems

Manufacturer's standard factory painting systems may be provided subject to certification that the factory painting system applied will withstand 125 hours in a salt-spray fog test, except that equipment located outdoors shall withstand 500 hours in a salt-spray fog test. Salt-spray fog test shall be in accordance with ASTM B 117, and for that test the acceptance criteria shall be as follows: immediately after completion of the test, the paint shall show no signs of blistering, wrinkling, or cracking, and no loss of adhesion; and the specimen shall show no signs of rust creepage beyond 3 mm on either side of the scratch mark.

The film thickness of the factory painting system applied on the equipment shall not be less than the film thickness used on the test specimen. If manufacturer's standard factory painting system is being proposed for use on surfaces subject to temperatures above 50 degrees C, the factory painting system shall be designed for the temperature service.

3.1.2 Shop Painting Systems for Metal Surfaces

Clean, pretreat, prime and paint metal surfaces; except aluminum surfaces need not be painted. Apply coatings to clean dry surfaces. Clean the surfaces to remove dust, dirt, rust, oil and grease by wire brushing and solvent degreasing prior to application of paint, except metal surfaces subject to temperatures in excess of 50 degrees C shall be cleaned to bare metal.

Where more than one coat of paint is specified, apply the second coat after the preceding coat is thoroughly dry. Lightly sand damaged painting and retouch before applying the succeeding coat. Color of finish coat shall be

aluminum or light gray.

a. Temperatures Less Than 50 Degrees C: Immediately after cleaning, the metal surfaces subject to temperatures less than 50 degrees C shall receive one coat of pretreatment primer applied to a minimum dry film thickness of 0.0076 mm, one coat of primer applied to a minimum dry film thickness of 0.0255 mm; and two coats of enamel applied to a minimum dry film thickness of 0.0255 mm per coat.

b. Temperatures Between 50 and 205 Degrees C: Metal surfaces subject to temperatures between 50 and 205 degrees C shall receive two coats of 205 degrees C heat-resisting enamel applied to a total minimum thickness of 0.05 mm.

c. Temperatures Greater Than 205 Degrees C: Metal surfaces subject to temperatures greater than 205 degrees C shall receive two coats of 315 degrees C heat-resisting paint applied to a total minimum dry film thickness of 0.05 mm.

-- End of Section --

SECTION 15080

THERMAL INSULATION FOR MECHANICAL SYSTEMS

PART 1 GENERAL

1.1 REFERENCES

The publications listed below form a part of this specification to the extent referenced. The publications are referred to in the text by basic designation only. At the discretion of the Government, the manufacturer of any material supplied will be required to furnish test reports pertaining to any of the tests necessary to assure compliance with the standard or standards referenced in this specification.

ASTM INTERNATIONAL (ASTM)

ASTM A 167	(2004) Stainless and Heat-Resisting Chromium-Nickel Steel Plate, Sheet, and Strip
ASTM A 580/A 580M	(1998; R 2004) Stainless Steel Wire
ASTM B 209M	(2004) Aluminum and Aluminum-Alloy Sheet and Plate (Metric)
ASTM C 1126	(2004) Faced or Unfaced Rigid Cellular Phenolic Thermal Insulation
ASTM C 1136	(2003a) Flexible, Low Permeance Vapor Retarders for Thermal Insulation
ASTM C 1290	(2004) Flexible Fibrous Glass Blanket Insulation Used to Externally Insulate HVAC Ducts
ASTM C 195	(2000) Mineral Fiber Thermal Insulating Cement
ASTM C 449/C 449M	(2000) Mineral Fiber Hydraulic-Setting Thermal Insulating and Finishing Cement
ASTM C 533	(2004) Calcium Silicate Block and Pipe Thermal Insulation
ASTM C 534	(2003) Preformed Flexible Elastomeric Cellular Thermal Insulation in Sheet and Tubular Form
ASTM C 552	(2003) Cellular Glass Thermal Insulation
ASTM C 553	(2002) Mineral Fiber Blanket Thermal Insulation for Commercial and Industrial Applications

ASTM C 591	(2001) Unfaced Preformed Rigid Cellular Polyisocyanurate Thermal Insulation
ASTM C 610	(1999) Molded Expanded Perlite Block and Pipe Thermal Insulation
ASTM C 612	(2004) Mineral Fiber Block and Board Thermal Insulation
ASTM C 665	(2001e1) Mineral-Fiber Blanket Thermal Insulation for Light Frame Construction and Manufactured Housing
ASTM C 795	(2003) Thermal Insulation for Use in Contact with Austenitic Stainless Steel
ASTM C 920	(2002) Elastomeric Joint Sealants
ASTM C 921	(2003a) Jackets for Thermal Insulation
ASTM D 882	(2002) Tensile Properties of Thin Plastic Sheeting
ASTM E 84	(2004) Surface Burning Characteristics of Building Materials
ASTM E 96	(2000e1) Water Vapor Transmission of Materials
ASTM F 1249	(2001) Standard Test Method for Water Vapor Transmission Rate Through Plastic Film and Sheeting Using a Modulated Infrared Senso

MANUFACTURERS STANDARDIZATION SOCIETY OF THE VALVE AND FITTINGS INDUSTRY (MSS)

MSS SP-69	(2002) Pipe Hangers and Supports - Selection and Application

MIDWEST INSULATION CONTRACTORS ASSOCIATION (MICA)

MICA Insulation Stds	(1999) National Commercial & Industrial Insulation Standards

1.2 SYSTEM DESCRIPTION

Field-applied insulation and accessories on mechanical systems shall be as specified herein; factory-applied insulation is specified under the piping, duct or equipment to be insulated. Field applied insulation materials required for use on Government-furnished items as listed in the SPECIAL CONTRACT REQUIREMENTS shall be furnished and installed by the Contractor.

1.3 GENERAL QUALITY CONTROL

1.3.1 Standard Products

Provide field-applied insulation for heating, ventilating, and cooling (HVAC) air distribution systems and piping systems which are located

within, on, under, and adjacent to buildings; and for plumbing systems. Materials shall be the standard products of manufacturers regularly engaged in the manufacture of such products and shall essentially duplicate items that have been in satisfactory use for at least 2 years prior to bid opening.

1.3.2 Installer's Qualifications

Qualified installers shall have successfully completed three or more similar type jobs within the last 5 years.

1.3.2 Surface Burning Characteristics

Unless otherwise specified, insulation not covered with a jacket shall have a flame spread index no higher than 75 and a smoke developed index no higher than 150. Insulation systems which are located in air plenums, in ceiling spaces, and in attic spaces shall have a flame spread index no higher than 25 and a smoke developed index no higher than 50. Insulation materials located exterior to the building perimeter are not required to be fire-rated. Flame spread, and smoke developed indexes, shall be determined by ASTM E 84. Insulation shall be tested in the same density and installed thickness as the material to be used in the actual construction. Material supplied by a manufacturer with a jacket shall be tested as a composite material. Jackets, facings, and adhesives shall have a flame spread index no higher than 25 and a smoke developed index no higher than 50 when tested in accordance with ASTM E 84.

1.3.3 Identification of Materials

Packages or standard containers of insulation, jacket material, cements, adhesives, and coatings delivered for use, and samples required for approval shall have manufacturer's stamp or label attached giving the name of the manufacturer and brand, and a description of the material.

1.4 SUBMITTALS

Government approval is required for submittals with a "G" designation; submittals not having a "G" designation are for information only. When used, a designation following the "G" designation identifies the office that will review the submittal for the Government. Submit the following in accordance with Section 01330 SUBMITTAL PROCEDURES:

SD-02 Shop Drawings

Thermal Insulation

After approval of materials and prior to applying insulation, a booklet shall be prepared and submitted for approval. The booklet shall containing detail drawings showing the insulation material and insulating system for each pipe, duct, or piece of equipment that must be insulated per this specification. The detail drawings shall show the materials to be installed in accordance with the requirements of this specification for the specific insulation application. The Contractor shall submit all detail drawings required to show the entire insulating system, including detail drawings required to show insulation penetrations, vessel bottom and top heads, legs, and skirt insulation as applicable. Detail drawings shall show cut-away, section views, and details indicating each component of the insulation system and showing provisions for insulating jacketing, and sealing portions of the

equipment. For each type of insulation installation on the drawings, provide a label that identifies each component in the installation (i.e., the duct, insulation, adhesive, vapor retarder, jacketing, tape, mechanical fasteners, etc.) Indicate insulation by type and manufacturer. Three copies of the booklet shall be submitted at the jobsite to the Government. One copy of the approved booklet shall remain with the insulation Contractor's display sample and two copies shall be provided for Government use.

SD-03 Product Data

General Materials

A complete list of materials, including manufacturer's descriptive technical literature, performance data, catalog cuts, and installation instructions. The product number, k-value, thickness and furnished accessories for each mechanical system requiring insulation shall be included. Materials furnished under this section of the specification shall be submitted at one time.

1.5 STORAGE

Materials shall be delivered in the manufacturer's unopened containers. Materials delivered and placed in storage shall be provided with protection from weather, humidity, dirt, dust and other contaminants. The Government may reject insulation material and supplies that become dirty, dusty, wet, or contaminated by some other means.

PART 2 PRODUCTS

2.1 GENERAL MATERIALS

Insulation material shall conform to Table 1. Insulation thickness shall be as listed in Table 2. Insulation thickness as specified in Table 2 shall be 25 mm. Insulation exterior shall be cleanable, grease resistant, non-flaking and non-peeling. Thermal Insulation materials shall be compatible and shall not contribute to corrosion, soften, or otherwise attack surfaces to which applied in either the wet or dry state. Materials to be used on stainless steel surfaces shall meet ASTM C 795 requirements. Materials shall be asbestos free and conform to the following:

2.1.1 Mineral Fiber Insulation Cement

Cement shall be in accordance with ASTM C 195.

2.1.1.1 Lagging Adhesive

Lagging is the material used for thermal insulation, especially around a cylindrical object. This may include the insulation as well as the cloth/material covering the insulation. Lagging adhesives shall be nonflammable and fire-resistant and shall have a flame spread rating no higher than 25 and a smoke developed rating no higher than 50 when tested in accordance with ASTM E 84. Adhesive shall be pigmented white and be suitable for bonding fibrous glass cloth to faced and unfaced fibrous glass insulation board; for bonding cotton brattice cloth to faced and unfaced fibrous glass insulation board; for sealing edges of and bonding fibrous glass tape to joints of fibrous glass board; for bonding lagging cloth to thermal insulation; or for attaching fibrous glass insulation to metal surfaces. Lagging adhesives shall be applied in strict accordance with the

manufacturer's recommendations.

2.1.2 Contact Adhesive

Adhesives may be dispersed in a volatile organic solvent. Adhesives may be any of, but not limited to, the neoprane based, rubber based, or elastomeric type that have a flame spread index no higher than 25 and a smoke developed index no higher than 50 when tested in the dry state in accordance with ASTM E 84. The adhesive shall not adversely affect, initially or in service, the insulation to which it is applied, nor shall it cause any corrosive effect on metal to which it is applied. Any solvent dispersing medium or volatile component of the adhesive shall have no objectionable odor and shall not contain any benzene or carbon tetrachloride. The dried adhesive shall not emit nauseous, irritating, or toxic volatile matters or aerosols when the adhesive is heated to any temperature up to 100 degrees C. The dried adhesive shall be nonflammable and fire resistant. Natural cross-ventilation, local (mechanical) pickup, and/or general area (mechanical) ventilation shall be used to prevent an accumulation of solvent vapors, keeping in mind the ventilation pattern must remove any heavier-than-air solvent vapors from lower levels of the workspaces. Gloves and spectacle-type safety glasses are recommended in accordance with safe installation practices.

2.1.3 Caulking

ASTM C 920, Type S, Grade NS, Class 25, Use A.

2.1.4 Corner Angles

Nominal 0.4060 mm aluminum 25 x 25 mm with factory applied kraft backing. Aluminum shall be ASTM B 209M , Alloy 3003, 3105, or 5005.

2.1.5 Finishing Cement

ASTM C 449/C 449M: Mineral fiber hydraulic-setting thermal insulating and finishing cement. All cements that may come in contact with Austenitic stainless steel must include testing per ASTM C 795.

2.1.6 Insulation Tape

Aluminum foil, Fibrous glass cloth and glass tape shall have flame spread and smoke developed ratings of no greater than 25/50 when measured in accordance with ASTM E 84. Tape shall be 100 mm wide rolls.

2.1.7 Staples

Outward clinching type, ASTM A 167, type 304 or 316 stainless steel or monel. Monel is a nickel rich alloy that has high strength, high ductility, and excellent resistance to corrosion.

2.1.8 Jackets

ASTM C 921, Type I, maximum moisture vapor transmission 0.02 perms, (measured before factory application or installation), minimum puncture resistance 50 Beach units on all surfaces except concealed ductwork, where a minimum puncture resistance of 25 Beach units is acceptable. Minimum tensile strength, 6.1 N/mm width. ASTM C 921, Type II minimum puncture resistance 25 Beach units, tensile strength minimum 3.5 N/mm width. Jackets used on insulation exposed in finished areas shall have white

finish suitable for painting without sizing. Based on the application, insulation materials that require factory applied jackets are mineral fiber, cellular glass, and phenolic foam. All non-metallic jackets shall have a maximum flame spread index of 25 and a maximum smoke developed index of 50 when tested in accordance with ASTM E 84.

2.1.8.1 White Vapor Retarder All Service Jacket (ASJ)

For use on hot/cold pipes, ducts, or equipment vapor retarder jackets used on insulation exposed in finished areas shall have white finish suitable for painting without sizing.

2.1.8.2 Aluminum Jackets

Aluminum jackets shall be corrugated, embossed or smooth sheet, 0.4060 mm nominal thickness; ASTM B 209M. Corrugated aluminum jacket shall not be used outdoors. Aluminum jacket securing bands shall be aluminum sheet or Type 304 stainless steel, 0.3960 mm thick, 12.7 mm wide for pipe under 300 mm diameter and 19.1 mm (3/4 inch) wide for pipe over 300 mm and larger diameter. Aluminum jacket circumferential seam bands shall be 50.8 x 0.4060 mm aluminum matching jacket material. The jacket may, at the option of the Contractor, be provided with a factory fabricated Pittsburg or "Z" type longitudinal joint. When the "Z" joint is used, the bands at the circumferential joints shall be designed by the manufacturer to seal the joints and hold the jacket in place.

2.1.8.3 Polyvinyl Chloride (PVC) Jackets

Polyvinyl chloride (PVC) jacket and fitting covers shall have high impact strength, UV resistant rating or treatment and moderate chemical resistance with minimum thickness 0.7620 mm.

2.1.9 Vapor Retarder Required

2.1.9.1 Vapor Retarder Mastic Coatings

The vapor retarder coating shall be fire and water resistant and appropriately selected for either outdoor or indoor service. Color shall be white. The water vapor permeance of the compound shall be determined according to procedure B of ASTM E 96 or ASTM F 1249. The coating shall be a nonflammable, fire resistant type.

2.1.9.2 Laminated Film Vapor Retarder

ASTM C 1136 Type I, maximum moisture vapor transmission 0.02 perms, minimum puncture resistance 50 Beach units on all surfaces except concealed ductwork, where Type II, maximum moisture vapor transmission 0.02 perms, a minimum puncture resistance of 25 Beach units is acceptable. Vapor retarder shall have a maximum flame spread index of 25 and a maximum smoke developed index of 50 when tested in accordance with ASTM E 84.

2.1.9.3 Polyvinylidene Chloride (PVDC) Film Vapor Retarder

The PVDC film vapor retarder shall have a maximum moisture vapor transmission of 0.02 perms, minimum puncture resistance of 150 Beach units, a minimum tensile strength in any direction of 5.3 kN/m when tested per ASTM D 882 and a maximum flame spread/smoke developed index of 25/50 per ASTM E 84.

2.1.9.4 Polyvinylidene Chloride Vapor Retarder Adhesive Tape

Requirements must meet the same as specified for PVDC Film Vapor Retarder in paragraph Laminated Film Vapor Retarder above.

2.1.10 Vapor Retarder Not Required

ASTM C 1136, Type III, maximum moisture vapor transmission 0.10 perms, minimum puncture resistance 50 Beach units on all surfaces except ductwork, where Type IV, maximum moisture vapor transmission 0.10, a minimum puncture resistance of 25 Beach units is acceptable.

2.1.11 Wire

Soft annealed ASTM A 580/A 580M Type 302, 304 or 316 stainless steel, 16 or 18 gauge.

2.1.12 Sealants

Sealants shall be chosen from the butyl polymer type, the styrene-butadiene rubber type, or the butyl or siliconized acrylic type of sealants. Sealants shall have a maximum flame spread/smoke developed index of 25/50 per ASTM E 84.

2.2 PIPE INSULATION MATERIALS

Pipe insulation materials shall be limited to those listed herein and shall meet the following requirements:

2.2.1 Aboveground Cold Pipeline

Insulation for minus 34 degrees to plus 16 degrees C for outdoor, indoor, exposed or concealed applications, shall be as follows:

a. Cellular Glass: ASTM C 552, Type II, and Type III. Supply the insulation with manufacturer's recommended factory-applied jacket.

b. Flexible Elastomeric Cellular Insulation: ASTM C 534, Type I or II. Insulation shall have vapor retarder skin on both sides of the insulation.

c. Phenolic Insulation: ASTM C 1126, Type III. Phenolic insulations shall comply with ASTM C 795 and with the ASTM C 665 paragraph Corrosiveness. Supply the insulation with manufacturer's recommended factory-applied jacket.

d. Polyisocyanurate Insulation: ASTM C 591, type I. Supply the insulation with manufacturer's recommended factory-applied vapor retarder.

e. Mineral Fiber: Supply the insulation with manufacturer's recommended factory-applied jacket. Provide vapor retarder skin on exterior side of jacket.

2.3 Aboveground Hot Pipeline

Insulation for above 16 degrees C , for outdoor, indoor, exposed or concealed applications shall meet the following requirements. Supply the insulation with manufacturer's recommended factory-applied jacket.

a. Mineral Fiber: Supply the insulation with manufacturer's recommended factory-applied jacket. Provide vapor retarder skin on exterior side of jacket.

   Basis of Design: Pipe Sections by Isocam or Kimmco Rigid Pipe Covering.

b. Calcium Silicate: ASTM C 533 Type I indoor only, or outdoors above 121 degrees C pipe temperature. Supply insulation with the manufacturer's recommended factory-applied jacket.

c. Cellular Glass: ASTM C 552, Type II and Type III. Supply the insulation with manufacturer's recommended factory-applied jacket.

d. Flexible Elastomeric Cellular Insulation: ASTM C 534, Type I or II to 93 degrees C service.

e. Phenolic Insulation: ASTM C 1126 Type III to 121 C service shall comply with ASTM C 795. Supply the insulation with manufacturer's recommended factory-applied jacket.

f. Perlite Insulation: ASTM C 610.

g. Polyisocyanurate Insulation: ASTM C 591, Type 1, to 149 degrees C service. Supply the insulation with manufacturer's recommended factory applied jacket.

2.4 DUCT INSULATION MATERIALS

Duct insulation materials shall be limited to those listed herein and shall meet the following requirements:

2.4.1 Rigid Mineral Fiber

ASTM C 612, Class 2 (maximum surface temperature 204 degrees C), 48 kg/m3 3 pcf average, 25 mm thick, Type IA, IB, II, III, and IV, with white paintable, factory-applied for cold air ducts.

2.4.2 Flexible Mineral Fiber

ASTM C 553: Type I,or Type II up to 121 C . ASTM C 1290 Type III with factory applied ASTM C 1136 type I or Type II vapor retarder jacket.

PART 3 EXECUTION

3.1 APPLICATION - GENERAL

Insulation shall only be applied to unheated and uncooled piping and equipment. Flexible elastomeric cellular insulation shall not be compressed at joists, studs, columns, ducts, hangers, etc. The insulation shall not pull apart after a one hour period; any insulation found to pull apart after one hour, shall be replaced.

3.1.1 Installation

Except as otherwise specified, material shall be installed in accordance with the manufacturer's written instructions. Insulation materials shall

not be applied until tests specified in other sections are completed. Material such as rust, scale, dirt and moisture shall be removed from surfaces to receive insulation. Insulation shall be kept clean and dry. Insulation shall not be removed from its shipping containers until the day it is ready to use and shall be returned to like containers or equally protected from dirt and moisture at the end of each workday. Insulation that becomes dirty shall be thoroughly cleaned prior to use. If insulation becomes wet or if cleaning does not restore the surfaces to like new condition, the insulation will be rejected, and shall be immediately removed from the jobsite. Joints shall be staggered on multi layer insulation. Mineral fiber thermal insulating cement shall be mixed with demineralized water when used on stainless steel surfaces. Insulation, jacketing and accessories shall be installed in accordance with MICA Insulation Stds plates except where modified herein or on the drawings.

3.1.2 Firestopping

Where pipes and ducts pass through fire walls, fire partitions, above grade floors, and fire rated chase walls, the penetration shall be sealed with fire stopping materials as specified in Section 07840 FIRESTOPPING.

3.1.3 Installation of Flexible Elastomeric Cellular Insulation

Flexible elastomeric cellular insulation shall be installed with seams and joints sealed with rubberized contact adhesive. Insulation with pre-applied adhesive is not permitted. Flexible elastomeric cellular insulation shall not be used on surfaces greater than 93 degrees C. Seams shall be staggered when applying multiple layers of insulation. Insulation exposed to weather and not shown to have jacketing shall be protected with two coats of UV resistant finish as recommended by the manufacturer after the adhesive is dry. A brush coating of adhesive shall be applied to both butt ends to be joined and to both slit surfaces to be sealed. The adhesive shall be allowed to set until dry to touch but tacky under slight pressure before joining the surfaces. Insulation seals at seams and joints shall not be capable of being pulled apart one hour after application. Insulation that can be pulled apart one hour after installation shall be replaced.

3.1.4 Welding

No welding shall be done on piping, duct or equipment without written approval of the Contracting Officer. The capacitor discharge welding process may be used for securing metal fasteners to duct.

3.1.5 Pipes/Ducts/Equipment which Require Insulation

Insulation is required on all pipes, ducts, or equipment, except for omitted items, as specified.

3.2 PIPE INSULATION INSTALLATION

3.2.1 Pipe Insulation

3.2.1.1 General

Pipe insulation shall be installed on aboveground hot and cold pipeline systems as specified below to form a continuous thermal retarder, including straight runs, fittings and appurtenances unless specified otherwise. Installation shall be with full length units of insulation and using a

single cut piece to complete a run. Cut pieces or scraps abutting each other shall not be used. Pipe insulation shall be omitted on the following:

a. Pipe used solely for fire protection.

b. Chromium plated pipe to plumbing fixtures. However, fixtures for use by the physically handicapped shall have the hot water supply and drain, including the trap, insulated where exposed.

a. Sanitary drain lines.

b. Air chambers.

3.2.1.2 Pipes Passing Through Walls, Roofs, and Floors

a. Pipe insulation shall be continuous through the sleeve.

b. An aluminum jacket with factory applied moisture retarder shall be provided over the insulation wherever penetrations require sealing.

c. Where pipes penetrate interior walls, the aluminum jacket shall extend 50 mm beyond either side of the wall and shall be secured on each end with a band.

d. Where penetrating floors, the aluminum jacket shall extend from a point below the backup material to a point 250 mm above the floor with one band at the floor and one not more than 25 mm from the end of the aluminum jacket.

e. Where penetrating waterproofed floors, the aluminum jacket shall extend from below the backup material to a point 50 mm above the flashing with a band 25 mm from the end of the aluminum jacket.

f. Where penetrating exterior walls, the aluminum jacket required for pipe exposed to weather shall continue through the sleeve to a point 50 mm beyond the interior surface of the wall.

g. Where penetrating roofs, pipe shall be insulated as required for interior service to a point flush with the top of the flashing and sealed with vapor retarder coating. The insulation for exterior application shall butt tightly to the top of flashing and interior insulation. The exterior aluminum jacket shall extend 50 mm down beyond the end of the insulation to form a counter flashing. The flashing and counter flashing shall be sealed underneath with caulking.

h. For domestic cold water pipes supplying lavatories or other similar cooling service that requires insulation, the insulation shall be terminated on the finished side of the wall (i.e., insulation must cover the pipe throughout the wall penetration). The insulation shall be protected with two coats of vapor barrier coating with a minimum total thickness of 2.0 mm . The coating shall extend out onto the insulation 50 mm and shall seal the end of the insulation. The annular space between the outer surface of the pipe insulation and the wall penetration shall be caulked with an approved fire stop material having vapor retarder properties. The pipe and wall penetration shall be covered with a properly sized (well fitting) escutcheon plate. The escutcheon plate shall overlap the wall penetration by at least 10 mm.

3.2.1.3 Pipes Passing Through Hangers

a. Insulation, whether hot or cold application, shall be continuous through hangers. All horizontal pipes 50 mm and smaller shall be supported on hangers with the addition of a Type 40 protection shield to protect the insulation in accordance with MSS SP-69. Whenever insulation shows signs of being compressed, or when the insulation or jacket shows visible signs of distortion at or near the support shield, insulation inserts as specified below for piping larger than 50 mm shall be installed.

b. Horizontal pipes larger than 50 mm at 16 degrees C and above shall be supported on hangers in accordance with MSS SP-69 and Section 15400 PLUMBING, GENERAL PURPOSE.

c. Horizontal pipes larger than 50 mm and below 16 degrees C shall be supported on hangers with the addition of a Type 40 protection shield in accordance with MSS SP-69. An insulation insert of cellular glass, calcium silicate (or perlite above 27 C), or the necessary strength polyisocyanurate shall be installed above each shield. The insert shall cover not less than the bottom 180-degree arc of the pipe. Inserts shall be the same thickness as the insulation, and shall extend 50 mm on each end beyond the protection shield. When insulation inserts are required per the above, and the insulation thickness is less than 25 mm , wooden or cork dowels or blocks may be installed between the pipe and the shield to prevent the weight of the pipe from crushing the insulation, as an option to installing insulation inserts. The insulation jacket shall be continuous over the wooden dowel, wooden block, or insulation insert.

d. Vertical pipes shall be supported with either Type 8 or Type 42 riser clamps with the addition of two Type 40 protection shields in accordance with MSS SP-69 covering the 360-degree arc of the insulation. An insulation insert of cellular glass or calcium silicate shall be installed between each shield and the pipe. The insert shall cover the 360-degree arc of the pipe. Inserts shall be the same thickness as the insulation, and shall extend 50 mm on each end beyond the protection shield. When insulation inserts are required per the above, and the insulation thickness is less than 25 mm , wooden or cork dowels or blocks may be installed between the pipe and the shield to prevent the hanger from crushing the insulation, as an option instead of installing insulation inserts. The insulation jacket shall be continuous over the wooden dowel, wooden block, or insulation insert. The vertical weight of the pipe shall be supported with hangers located in a horizontal section of the pipe. When the pipe riser is longer than 9 m , the weight of the pipe shall be additionally supported with hangers in the vertical run of the pipe that are directly clamped to the pipe, penetrating the pipe insulation. These hangers shall be insulated and the insulation jacket sealed as indicated herein for anchors in a similar service.

e. Inserts shall be covered with a jacket material of the same appearance and quality as the adjoining pipe insulation jacket, shall overlap the adjoining pipe jacket 38 mm, and shall be sealed as required for the pipe jacket. The jacket material used to cover inserts in flexible elastomeric cellular insulation shall

conform to ASTM C 1136, Type 1, and is allowed to be of a different material than the adjoining insulation material.

3.2.1.4 Flexible Elastomeric Cellular Pipe Insulation

Flexible elastomeric cellular pipe insulation shall be tubular form for pipe sizes 150 mm and less. Grade 1, Type II sheet insulation used on pipes larger than 150 mm shall not be stretched around the pipe. On pipes larger than 300 mm, the insulation shall be adhered directly to the pipe on the lower 1/3 of the pipe. Seams shall be staggered when applying multiple layers of insulation. Sweat fittings shall be insulated with miter-cut pieces the same size as on adjacent piping. Screwed fittings shall be insulated with sleeved fitting covers fabricated from miter-cut pieces and shall be overlapped and sealed to the adjacent pipe insulation.

3.2.1.5 Pipes in high abuse areas.

In high abuse areas such as janitor closets and traffic areas in equipment rooms, kitchens, and mechanical rooms, aluminum jackets shall be utilized. Pipe insulation to the 1.8 m level shall be protected.

3.2.2 Aboveground Cold Pipelines

The following cold pipelines shall be insulated per Table I minus 34 degrees C to plus 16 degrees C:

a. Domestic cold water.

b. Make-up water.

c. Horizontal and vertical portions of interior roof drains.

b. Refrigerant suction lines.

c. Air conditioner condensate drains.

i. Exposed lavatory drains and domestic water lines serving plumbing fixtures for handicap persons.

3.2.2.1 Insulation Thickness

Insulation thickness for cold pipelines shall be determined using Table I or as recommended by manufacturer.

Table I - Cold Piping Insulation Thickness
Pipe Size (mm)

Type of Service	Material	Run-outs up to 50 mm*	25 mm & less	30 50 mm	65 - 100 mm	125 - 150 mm	205 mm & larger
Refrigerant suction piping	CG		40	40	40	40	40
	FC		25	25	25	25	25
	PF		40	40	40	40	40
	PC		25	25	25	25	25
Cold domestic water, above and below	CG	40	40	40	40	40	40
	FC	10	10	10	10	10	10
	PF	40	40	40	40	40	40

Table I - Cold Piping Insulation Thickness
Pipe Size (mm)

Type of Service	Material	Run-outs up to 50 mm*	25 mm & less	30 50 mm	65 - 100 mm	125 - 150 mm	205 mm & larger
ceilings, & make up water	PC	25	25	25	25	25	25
	MF	15	25	25	40	40	40
Exposed lavatory drains and domestic water lines serving plumbing fixtures for handicap personnel	FC	15	15	15	15	20	20
	MF	15	25	25	40	40	40
Horizontal & vertical roof drain leaders (including underside of roof drain fitting)	FC		15	15	15	15	15
	PF		40	40	40	40	40
	CG		40	40	40	40	40
	PC		25	25	25	25	25
Air conditioning condensate drain located inside building	FC		10	15	15	N/A	N/A
	PF		40	40	40	N/A	N/A
	PC		25	25	25	N/A	N/A

LEGEND:

PF - Phenolic Foam
CG - Cellular Glass
MF - Mineral Fiber
FC - Flexible Elastomeric Cellular
PC - Polyisocyanurate Foam

3.2.2.2 Jacket for Mineral Fiber, Cellular Glass, Phenolic Foam, and Polyisocyanurate Foam Insulated Pipe

Insulation shall be covered with a factory applied vapor retarder jacket or field applied seal welded PVC jacket. Insulation inside the building, to be protected with an aluminum jacket, shall have the insulation and vapor retarder jacket installed as specified herein. The aluminum jacket shall be installed as specified for piping exposed to weather, except sealing of the laps of the aluminum jacket is not required. In high abuse areas such as janitor closets and traffic areas in equipment rooms, kitchens, and mechanical rooms, aluminum jackets shall be utilized. Pipe insulation to the 1.8 m level shall be protected.

3.2.2.3 Insulation for Straight Runs (Mineral Fiber, Cellular Glass, Phenolic Foam and Polyisocyanurate Foam)

a. Insulation shall be applied to the pipe with joints tightly butted. All butted joints and ends shall be sealed with joint sealant and sealed with a vapor retarder coating or PVDC adhesive tape.

b. Longitudinal laps of the jacket material shall overlap not less than 38 mm. Butt strips 75 mm wide shall be provided for circumferential joints.

c. Laps and butt strips shall be secured with adhesive and stapled on 100 mm centers if not factory self-sealing. If staples are used, they shall be sealed per item "e." below. Note that staples are not required with cellular glass systems.

d. Factory self-sealing lap systems may be used when the ambient temperature is between 4 degrees and 50 degrees C during installation. The lap system shall be installed in accordance with manufacturer's recommendations. Stapler shall be used only if specifically recommended by the manufacturer. Where gaps occur, the section shall be replaced or the gap repaired by applying adhesive under the lap and then stapling.

e. All Staples, including those used to repair factory self-seal lap systems, shall be coated with a vapor retarder coating or PVDC adhesive tape. All seams, except those on factory self-seal systems shall be coated with vapor retarder coating or PVDC adhesive tape.

f. Breaks and punctures in the jacket material shall be patched by wrapping a strip of jacket material around the pipe and securing it with adhesive, stapling, and coating with vapor retarder coating or PVDC adhesive tape. The patch shall extend not less than 38 mm past the break.

g. At penetrations such as thermometers, the voids in the insulation shall be filled and sealed with vapor retarder coating or PVDC adhesive tape.

3.2.2.4 Insulation for Fittings and Accessories

a. Pipe insulation shall be tightly butted to the insulation of the fittings and accessories. The butted joints and ends shall be sealed with joint sealant and sealed with a vapor retarder coating or PVDC adhesive tape.

b. Precut or preformed insulation shall be placed around all fittings and accessories and shall conform to MICA plates except as modified herein: 5 for anchors; 10, 11, and 13 for fittings; 14 for valves; and 17 for flanges and unions. Insulation shall be the same insulation as the pipe insulation, including same density, thickness, and thermal conductivity. Where precut/preformed is unavailable, rigid preformed pipe insulation sections may be segmented into the shape required. Insulation of the same thickness and conductivity as the adjoining pipe insulation shall be used. If nesting size insulation is used, the insulation shall be overlapped 50 mm or one pipe diameter.

Elbows insulated using segments shall conform to MICA Tables 12.20 "Mitered Insulation Elbow'.

c. Upon completion of insulation installation on flanges, unions, valves, anchors, fittings and accessories, terminations, seams, joints and insulation not protected by factory vapor retarder jackets or PVC fitting covers shall be protected with PVDC adhesive tape or two coats of vapor retarder coating with a minimum total thickness of 2.0 mm, applied with glass tape embedded between coats. Tape seams shall overlap 25 mm . The coating shall extend out onto the adjoining pipe insulation 50 mm. Fabricated insulation with a factory vapor retarder jacket shall be protected with PVDC adhesive tape or two coats of vapor retarder coating with a minimum thickness of 2 mm and with a 50 mm wide glass tape embedded between coats. Where fitting insulation butts to pipe insulation, the joints shall be sealed with a vapor retarder coating and a 100 mm wide ASJ tape which matches the jacket of the pipe insulation.

d. Anchors attached directly to the pipe shall be insulated for a sufficient distance to prevent condensation but not less than 150 mm from the insulation surface.

e. Insulation shall be marked showing the location of unions, strainers, and check valves.

3.2.2.5 Optional PVC Fitting Covers

At the option of the Contractor, premolded, one or two piece PVC fitting covers may be used in lieu of the vapor retarder and embedded glass tape. Factory precut or premolded insulation segments shall be used under the fitting covers for elbows. Insulation segments shall be the same insulation as the pipe insulation including same density, thickness, and thermal conductivity. The covers shall be secured by PVC vapor retarder tape, adhesive, seal welding or with tacks made for securing PVC covers. Seams in the cover, and tacks and laps to adjoining pipe insulation jacket, shall be sealed with vapor retarder tape to ensure that the assembly has a continuous vapor seal.

3.2.3 Aboveground Hot Pipelines

The following hot pipelines above 16 degrees C shall be insulated per Table II:

a. Domestic hot water supply & re-circulating system.

b. Water defrost lines in refrigerated rooms.

3.2.3.1 Insulation Thickness

Insulation thickness for hot pipelines shall be determined using Table II.

LEGEND:

PF - Phenolic Foam
CG - Cellular Glass
CS - Calcium Silicate
MF - Mineral Fiber
FC - Flexible Elastomeric Cellular

PL - Perlite
PC - Polyisocyanurate Foam

Table II - Hot Piping Insulation Thickness
Pipe Size (mm)

Type of Service (degrees C)	Material	Run-outs up to 50 mm*	25 mm & less	32 - 50 mm	65 - 100 mm	125 - 150 mm	205 mm & larger
Hot domestic water supply & re-circulating system & Water defrost lines (93C max)**	CG	40	40	40	40	40	40
	FC	15	25	25	40	40	40
	PF	15	25	25	25	25	25
	MF	15	25	25	40	40	40
	PC	25	25	25	25	25	25

* When run-outs to terminal units exceed 3.66 m, the entire length of run-out shall be insulated like the main feed pipe.

** Applied to re-circulating sections of service or domestic hot water systems and first 2.4 meters from storage tank for non-re-circulating systems.

3.2.3.2 Jacket for Insulated Hot Pipe, Except Pipe Insulated with Flexible Elastomeric Cellular

Insulation shall be covered, in accordance with manufacturer's recommendations, with a factory applied Type II jacket or field applied aluminum where required or seal welded PVC.

3.2.3.3 Insulation for Straight Runs

a. Insulation shall be applied to the pipe with joints tightly butted.

b. Longitudinal laps of the jacket material shall overlap not less than 38 mm, and butt strips 75 mm wide shall be provided for circumferential joints.

c. Laps and butt strips shall be secured with adhesive and stapled on 100 mm centers if not factory self-sealing. Adhesive may be omitted where pipe is concealed.

d. Factory self-sealing lap systems may be used when the ambient temperature is between 4 degrees and 49 degrees C and shall be installed in accordance with manufacturer's instructions. Laps and butt strips shall be stapled whenever there is non-adhesion of the system. Where gaps occur, the section shall be replaced or the gap repaired by applying adhesive under the lap and then stapling.

e. Breaks and punctures in the jacket material shall be patched by either wrapping a strip of jacket material around the pipe and securing with adhesive and staple on 100 mm centers (if not factory self-sealing), or patching with tape and sealing with a brush coat of vapor retarder coating. Adhesive may be omitted where pipe is concealed. Patch shall extend not less than 38 mm past the break.

f. Installation of flexible elastomeric cellular pipe insulation shall be by slitting the tubular sections and applying them onto the piping or tubing. Alternately, whenever possible slide un-slit sections over the open ends of piping or tubing. All seams and butt joints shall be secured and sealed with adhesive. When using self seal products only the butt joints shall be secured with adhesive. Insulation shall be pushed on the pipe, never pulled. Stretching of insulation may result in open seams and joints. All edges shall be clean cut. Rough or jagged edges of the insulation shall not be permitted. Proper tools such as sharp knives shall be used. Type II sheet insulation when used on pipe larger than 150 mm shall not be stretched around the pipe. On pipes larger than 300 mm, adhere sheet insulation directly to the pipe on the lower 1/3 of the pipe.

3.2.3.4 Insulation for Fittings and Accessories

a. Pipe insulation shall be tightly butted to the insulation of the fittings and accessories.

b. Precut or preformed insulation shall be placed around all fittings and accessories and shall conform to MICA plates, except as modified herein: 5 for anchors; 10, 11, 12,and 13 for fittings; 14, 15 and 16 for valves; 17 for flanges and unions; and 18 for couplings. Insulation shall be the same as the pipe insulation, including same density, thickness, and thermal conductivity. Where precut/preformed is unavailable, rigid preformed pipe insulation sections may be segmented into the shape required. Insulation of the same thickness and conductivity as the adjoining pipe insulation shall be used. If nesting size insulation is used, the insulation shall be overlapped 50 mm or one pipe diameter. Elbows insulated using segments shall conform to MICA Tables 12.20 "Mitered Insulation Elbow".

c. Upon completion of installation of insulation on flanges, unions, valves, anchors, fittings and accessories, terminations and insulation not protected by factory jackets or PVC fitting covers shall be protected with two coats of adhesive applied with glass tape embedded between coats. Tape seams shall overlap 25 mm. Adhesive shall extend onto the adjoining insulation not less than 50 mm. The total dry film thickness shall be not less than 2.0 mm.

d. Insulation terminations shall be tapered to unions at a 45-degree angle.

e. At the option of the Contractor, factory pre-molded one- or two-piece PVC fitting covers may be used in lieu of the adhesive and embedded glass tape. Factory pre-molded segments or factory or field cut blanket insert insulation segments shall be used under the cover and shall be the same thickness as adjoining pipe insulation. The covers shall be secured by PVC vapor retarder tape, adhesive, seal welding or with tacks made for securing PVC covers.

3.2.4 Piping Exposed to Weather

Piping exposed to weather shall be insulated and jacketed as specified for

the applicable service inside the building. After this procedure, an aluminum jacket or PVC jacket shall be applied. PVC jacketing requires no factory-applied jacket beneath it, however an all service jacket shall be applied if factory applied jacketing is not furnished. Flexible elastomeric cellular insulation exposed to weather shall be treated in accordance with paragraph INSTALLATION OF FLEXIBLE ELASTOMERIC CELLULAR INSULATION.

3.2.4.1 Aluminum Jacket

The jacket for hot piping may be factory applied. The jacket shall overlap not less than 50 mm at longitudinal and circumferential joints and shall be secured with bands at not more than 300 mm centers. Longitudinal joints shall be overlapped down to shed water and located at 4 or 8 o'clock positions. Joints on piping 16 degrees C and below shall be sealed with caulking while overlapping to prevent moisture penetration. Where jacketing on piping 16 degrees C and below abuts an un-insulated surface, joints shall be caulked to prevent moisture penetration. Joints on piping above 16 degrees C shall be sealed with a moisture retarder.

3.2.4.2 Insulation for Fittings

Flanges, unions, valves, fittings, and accessories shall be insulated and finished as specified for the applicable service. Two coats of breather emulsion type weatherproof mastic (impermeable to water, permeable to air) recommended by the insulation manufacturer shall be applied with glass tape embedded between coats. Tape overlaps shall be not less than 25 mm and the adjoining aluminum jacket not less than 50 mm. Factory preformed aluminum jackets may be used in lieu of the above. Molded PVC fitting covers shall be provided when PVC jackets are used for straight runs of pipe. PVC fitting covers shall have adhesive welded joints and shall be weatherproof.

3.2.4.3 PVC Jacket

PVC jacket shall be ultraviolet resistant and adhesive welded weather tight with manufacturer's recommended adhesive. Installation shall include provision for thermal expansion.

3.3 DUCT INSULATION INSTALLATION

Except for oven hood exhaust duct insulation, corner angles shall be installed on external corners of insulation on ductwork in exposed finished spaces before covering with jacket.

3.3.1 Duct Insulation Thickness

Duct insulation thickness shall be in accordance with Table III.

Table III - Minimum Duct Insulation (mm)

Cold Air Ducts	50
Relief Ducts	40
Fresh Air Intake Ducts	40
Warm Air Ducts	50
Exterior Return Ducts	100

Duct insulation thickness may be less be specified above if reduced thickness is appropriate to application and approved by Government.

3.3.2 Insulation and Vapor Retarder for Cold Air Duct

Insulation and vapor retarder shall be provided for the following cold air ducts and associated equipment.

a. Supply ducts.

b. Return ducts.

c. Ducts exposed to weather.

d. Relief ducts.

e. Plenums.

f. Duct-mounted coil casings.

g. Coil headers and return bends.

h. Coil casings.

i. Fresh air intake ducts.

j. Filter boxes.

k. Mixing boxes (field-insulated).

l. Supply fans (field-insulated).

m. Site-erected air conditioner casings.

n. Ducts exposed to weather.

o. Combustion air intake ducts.

Insulation for rectangular ducts shall be flexible type where concealed, minimum density 12 kg per cubic meter and rigid type where exposed, minimum density 48 kg per cubic meter. Insulation for round/oval ducts shall be flexible type, minimum density 12 kg per cubic meter ; or, a semi rigid board, minimum density 48 kg per cubic meter, , formed or fabricated to a tight fit, edges beveled and joints tightly butted and staggered, with a factory applied Type I or II all service jacket. Duct insulation shall be continuous through sleeves and prepared openings except firewall penetrations. Duct insulation terminating at fire dampers, shall be continuous over the damper collar and retaining angle of fire dampers, which are exposed to unconditioned air and which may be prone to condensate formation. Duct insulation and vapor retarder shall cover the collar, neck, and any un-insulated surfaces of diffusers, registers and grills. Vapor retarder materials shall be applied to form a complete unbroken vapor seal over the insulation. Sheet Metal Duct shall be sealed in accordance with Section 15895 AIR SUPPLY, DISTRIBUTION, VENTILATION, AND EXHAUST SYSTEM.

3.3.2.1 Installation on Concealed Duct

a. For rectangular, oval or round ducts, insulation shall be attached by applying adhesive around the entire perimeter of the duct in 150 mm wide strips on 300 mm centers.

b. For rectangular and oval ducts, 600 mm and larger insulation shall be additionally secured to bottom of ducts by the use of mechanical fasteners. Fasteners shall be spaced on 400 mm centers and not more than 400 mm from duct corners.

c. For rectangular, oval and round ducts, mechanical fasteners shall be provided on sides of duct risers for all duct sizes. Fasteners shall be spaced on 400 mm centers and not more than 400 mm from duct corners.

d. Insulation shall be impaled on the mechanical fasteners (self stick pins) where used and shall be pressed thoroughly into the adhesive. Care shall be taken to ensure vapor retarder jacket joints overlap 50 mm. The insulation shall not be compressed to a thickness less than that specified. Insulation shall be carried over standing seams and trapeze-type duct hangers.

e. Self-locking washers shall be installed where mechanical fasteners are used. The pin shall be trimmed back and bent over.

f. Jacket overlaps shall be secured with staples and tape as necessary to ensure a secure seal. Staples, tape and seams shall be coated with a brush coat of vapor retarder coating or PVDC adhesive tape.

g. Breaks in the jacket material shall be covered with patches of the same material as the vapor retarder jacket. The patches shall extend not less than 50 mm beyond the break or penetration in all directions and shall be secured with tape and staples. Staples and tape joints shall be sealed with a brush coat of vapor retarder coating or PVDC adhesive tape.

h. At jacket penetrations such as hangers, thermometers, and damper operating rods, voids in the insulation shall be filled and the penetration sealed with a brush coat of vapor retarder coating or PVDC adhesive tape.

i. Insulation terminations and pin punctures shall be sealed and flashed with a reinforced vapor retarder coating finish or tape with a brush coat of vapor retarder coating.. The coating shall overlap the adjoining insulation and un-insulated surface 50 mm. Pin puncture coatings shall extend 50 mm from the puncture in all directions.

j. Where insulation standoff brackets occur, insulation shall be extended under the bracket and the jacket terminated at the bracket.

3.3.2.2 Installation on Exposed Duct Work

a. For rectangular ducts, rigid insulation shall be secured to the duct by mechanical fasteners on all four sides of the duct, spaced not more than 300 mm apart and not more than 75 mm from the edges of the insulation joints. A minimum of two rows of fasteners shall be provided for each side of duct 300 mm and larger. One row shall be provided for each side of duct less than 300 mm.

b. Duct insulation shall be formed with minimum jacket seams. Each piece of rigid insulation shall be fastened to the duct using mechanical fasteners. When the height of projections is less than the insulation thickness, insulation shall be brought up to standing seams, reinforcing, and other vertical projections and shall not be carried over. Vapor retarder jacket shall be continuous across seams, reinforcing, and projections. When height of projections is greater than the insulation thickness, insulation and jacket shall be carried over.

c. Insulation shall be impaled on the fasteners; self-locking washers shall be installed and the pin trimmed or bent over.

d. Joints in the insulation jacket shall be sealed with a 100 mm wide strip of tape. Tape seams shall be sealed with a brush coat of vapor retarder coating.

e. Breaks and ribs or standing seam penetrations in the jacket material shall be covered with a patch of the same material as the jacket. Patches shall extend not less than 50 mm beyond the break or penetration and shall be secured with tape and stapled. Staples and joints shall be sealed with a brush coat of vapor retarder coating.

f. At jacket penetrations such as hangers, thermometers, and damper operating rods, the voids in the insulation shall be filled and the penetrations sealed with a brush coat of vapor retarder coating.

g. Insulation terminations and pin punctures shall be sealed and flashed with a reinforced vapor retarder coating finish. The coating shall overlap the adjoining insulation and un-insulated surface 50 mm. Pin puncture coatings shall extend 50 mm from the puncture in all directions.

h. Oval and round ducts, flexible type, shall be insulated with factory Type I jacket insulation with minimum density of 12 kg per cubic meter, attached as per MICA standards.

3.3.3 Insulation for Warm Air Duct

Insulation and vapor barrier shall be provided for the following warm air ducts and associated equipment:

a. Supply ducts.

b. Return ducts

c. Ducts exposed to weather

d. Relief air ducts

e. Plenums

f. Duct-mounted coil casings

g. Coil-headers and return bends

h. Coil casings.

i. Fresh air intake ducts

j. Filter boxes

k. Mixing boxes

l. Supply fans

m. Site-erected air conditioner casings

Insulation for rectangular ducts shall be flexible type where concealed, minimum density 12 kg per cubic meter; and rigid type where exposed, minimum density 48 kg per cubic meter. Flexible type insulation shall be used for round ducts, minimum density 12 kg per cubic meter . Adhesive finish where indicated to be used shall be accomplished by applying two coats of adhesive with a layer of glass cloth embedded between the coats. The total dry film thickness shall be approximately 2.0 mm Duct insulation shall be continuous through sleeves and prepared openings. Duct insulation shall terminate at fire dampers and flexible connections.

3.3.3.1 Installation on Concealed Duct

a. For rectangular, oval and round ducts, insulation shall be attached by applying adhesive around the entire perimeter of the duct in 150 mm wide strips on 300 mm centers.

b. For rectangular and oval ducts 600 mm and larger, insulation shall be secured to the bottom of ducts by the use of mechanical fasteners. Fasteners shall be spaced on 450 mm centers and not more than 450 mm from duct corner.

c. For rectangular, oval and round ducts, mechanical fasteners shall be provided on sides of duct risers for all duct sizes. Fasteners shall be spaced on 450 mm centers and not more than 450 mm from duct corners.

d. The insulation shall be impaled on the mechanical fasteners where used. The insulation shall not be compressed to a thickness less than that specified. Insulation shall be carried over standing seams and trapeze-type hangers.

e. Self-locking washers shall be installed where mechanical fasteners are used and the pin trimmed and bent over.

f. Insulation jacket shall overlap not less than 50 mm at joints and the lap shall be secured and stapled on 100 mm centers.

3.3.3.2 Installation on Exposed Duct

a. For rectangular ducts, the rigid insulation shall be secured to the duct by the use of mechanical fasteners on all four sides of the duct, spaced not more than 400 mm apart and not more than 150 mm from the edges of the insulation joints. A minimum of two rows of fasteners shall be provided for each side of duct 300 mm and larger and a minimum of one row for each side of duct less than 300 mm.

b. Duct insulation with factory-applied jacket shall be formed with

minimum jacket seams, and each piece of rigid insulation shall be fastened to the duct using mechanical fasteners. When the height of projection is less than the insulation thickness, insulation shall be brought up to standing seams, reinforcing, and other vertical projections and shall not be carried over the projection. Jacket shall be continuous across seams, reinforcing, and projections. Where the height of projections is greater than the insulation thickness, insulation and jacket shall be carried over the projection.

c. Insulation shall be impaled on the fasteners; self-locking washers shall be installed and pin excess clipped and bent over.

d. Joints on jacketed insulation shall be sealed with a 100 mm wide strip of tape and brushed with vapor retarder coating.

e. Breaks and penetrations in the jacket material shall be covered with a patch of the same material as the jacket. Patches shall extend not less than 50 mm beyond the break or penetration and shall be secured with adhesive and stapled.

f. Insulation terminations and pin punctures shall be sealed with tape and brushed with vapor retarder coating.

g. Oval and round ducts, flexible type, shall be insulated with factory Type I jacket insulation, minimum density of 12 kg per cubic meter attached by staples spaced not more than 400 mm and not more than 150 mm from the degrees of joints. Joints shall be sealed in accordance with item "d." above.

3.3.4 Ducts Handling Air for Dual Purpose

For air handling ducts for dual purpose below and above 16 degrees C, ducts shall be insulated as specified for cold air duct.

3.3.5 Insulation for Evaporative Cooling Duct

Evaporative cooling supply duct located in spaces not evaporatively cooled, shall be insulated. Material and installation requirements shall be as specified for duct insulation for warm air duct.

3.3.6 Duct Test Holes

After duct systems have been tested, adjusted, and balanced, breaks in the insulation and jacket shall be repaired in accordance with the applicable section of this specification for the type of duct insulation to be repaired.

3.3.7 Duct Exposed to Weather

3.3.7.1 Installation

Ducts exposed to weather shall be insulated and finished as specified for the applicable service for exposed duct inside the building. After the above is accomplished, the insulation shall then be further finished as detailed in the following subparagraphs.

3.3.7.2 Round Duct

Aluminum jacket with factory applied moisture retarder shall be applied with the joints lapped not less than 75 mm and secured with bands located at circumferential laps and at not more than 300 mm intervals throughout. Horizontal joints shall lap down to shed water and located at 4 or 8 o'clock position. Joints shall be sealed with caulking to prevent moisture penetration. Where jacketing abuts an un-insulated surface, joints shall be sealed with caulking.

3.3.7.3 Fittings

Fittings and other irregular shapes shall be finished as specified for rectangular ducts.

3.3.7.4 Rectangular Ducts

Two coats of weather barrier mastic reinforced with fabric or mesh for outdoor application shall be applied to the entire surface. Each coat of weatherproof mastic shall be 2.0 mm minimum thickness. The exterior shall be a metal jacketing applied for mechanical abuse and weather protection, and secured with screws.

-- End of Section --

SECTION 15192

FUEL OIL PIPING

PART 1 GENERAL

1.1 REFERENCES

The publications listed below form a part of this specification to the extent referenced. The publications are referred to in the text by the basic designation only. Unless otherwise specified or indicated, electrical and electronics terms used in these specifications and on the Drawings, shall be as defined in DIN, I.E.C., BS or EN standards.

AMERICAN NATIONAL STANDARDS INSTITUTE (ANSI)

ANSI A13.1	(1996; R 2002) Scheme for Identification of Piping Systems
ANSI B16.24	(1991; Errata 1991) Cast Copper Alloy Pipe Flanges and Flanged Fittings Class 150, 300, 400, 600, 900, 1500, and 2500

AMERICAN PETROLEUM INSTITUTE (API)

API 600	(2001) Bolted Bonnet Steel Gate Valves for Petroleum and Natural Gas Industries

ASME INTERNATIONAL (ASME)

ASME B16.3	(1998) Malleable Iron Threaded Fittings
ASME B16.5	(2003) Pipe Flanges and Flanged Fittings
ASME B16.11	(2001) Forged Fittings, Socket-Welding and Threaded
ASME B16.21	(1992) Nonmetallic Flat Gaskets for Pipe Flanges
ASME B16.22	(2002) Wrought Copper and Copper Alloy Solder Joint Pressure Fittings
ASME B16.39	(1998) Malleable Iron Threaded Pipe Unions
ASME B31.1	(2004) Power Piping
ASME B31.3	(2002) Process Piping
ASME B31.4	(2002) Piping Transportation Systems for Liquid Hydrocarbons and Other Liquid
ASME B40.1	(1991) Gauges - Pressure Indicating Dial Type - Elastic Element
ASME BPVC SEC VIII D1	(2001) Boiler and Pressure Vessel Code; Section VIII, Pressure Vessels Division 1

- Basic Coverage

ASME BPVC SEC IX	(2001) Boiler and Pressure Vessel Code; Section IX, Welding and Brazing Qualifications

ASTM INTERNATIONAL (ASTM)

ASTM A 53	(1999b) Pipe, Steel, Black and Hot-Dipped, Zinc-Coated, Welded and Seamless
ASTM A 53/A 53M	(2004a) Pipe, Steel, Black and Hot-Dipped, Zinc-Coated, Welded and Seamless
ASTM B 88M	(2003) Seamless Copper Water Tube (Metric)

AMERICAN WELDING SOCIETY (AWS)

AWS A5.8	(1992) Filler Metals for Brazing and Braze Welding
AWS Z49.1	(1999) Safety in Welding, Cutting and Allied Processes

U.S. GENERAL SERVICES ADMINISTRATION (GSA)

FS A-A-1689	(Rev B) Tape, Pressure-Sensitive Adhesive, (Plastic Film)
FS A-A-50568	(Basic) Gages, Liquid Level Measuring, Tank
FS A-A-58092	(Basic) Tape, Antiseize, Polytetrafluoroethylene
FS A-A-59313	(Basic; Notice 1) Thread, Compound, Antiseize, Zinc Dust-Petrolatum
FS WW-S-2739	(Basic) Strainers, Sediment: Pipeline, Water, Air, Gas, Oil, or Steam
FS GG-M-2802	Meter, Fluid Quantity Volumetric

U.S. DEPARTMENT OF DEFENSE (DOD)

MIL-V-18436	(Rev F) Valves, Check, Bronze, Cast Iron, and Steel Body
MIL-C-19902	(Rev C; Notice 2) Caps, Vent, Fuel Storage Tank
MIL-P-24441	(Rev C; Supp 1) Paint, Epoxy-Polyamide

MANUFACTURERS STANDARDIZATION SOCIETY OF THE VALVE AND FITTINGS INDUSTRY (MSS)

MSS SP-58	(2002) Pipe Hangers and Supports - Materials, Design and Manufacture
MSS SP-69	(2002) Pipe Hangers and Supports -

	Selection and Application
MSS SP-110	(1996) Ball Valves Threaded, Socket-Welding, Solder Joint, Grooved and Flared Ends

NATIONAL FIRE PROTECTION ASSOCIATION (NFPA)

NFPA 30	(2003) Flammable and Combustible Liquids Code
NFPA 31	(2001) Installation of Oil Burning Equipment
NFPA 780	(2000) Installation of Lightning Protection Systems

THE SOCIETY FOR PROTECTIVE COATINGS (SSPC)

SSPC SP 10	(2000) Near-White Blast Cleaning
SSPC Paint 20	(2002) Zinc-Rich Primers, (Type I - "Inorganic" and Type II - "Organic")

UNDERWRITERS LABORATORIES (UL)

UL 142	(2002) Standard for Steel Aboveground Tanks for Flammable and Combustible Liquids Type Standard
UL 842	(1997; Rev Oct 1999) Valves for Flammable Fluids

1.2 DEFINITIONS

1.2.1 Carrier Piping

Piping which contains fuel oil, exclusively.

1.3 MATERIAL AUTHENTICATION DATA INCLUDED IN DESIGN ANALYSIS

Government approval is required for submittals with a "G" designation; submittals not having a "G" designation are for information only. When used, a designation following the "G" designation identifies the office that will review the submittal for the Government. Submit the following in accordance with Section 01330 SUBMITTAL PROCEDURES:

SD-03 Product Data

Pipe and fittings

Valves

Flexible hose

Dielectric unions

Strainers

Meters

Instruments

Pumps

Storage tanks

SD-08 Manufacturer's Instructions

Fiberglass and flexible pipe

SD-10 Operation and Maintenance Data

Pumps

1.4 QUALITY ASSURANCE

1.4.1 Welding Procedure

Before performing welding, submit three copies of welding procedure specification for metals included in the work together with proof of its qualifications as outlined in ASME B.31.1.

1.4.2 Qualification of Welders

Before welder or operator performs welding, submit to the Contracting Officer three copies of the Welder's Performance Qualification Record in conformance with ASME B31.1 showing that the welder was tested under the approved procedure specification submitted by the Contractor.

1.4.3 List of Welder's Names and Symbols

Submit each welder's assigned number, letter, or symbol which shall be used to identify the work of the welder and shall be affixed immediately upon completion of the weld.

1.4.4 Defective Welds

Welders making defective welds after passing a qualification test shall be required to take a re-qualification test. Welders failing the re-qualification tests will not be permitted to work under this contract.

1.4.5 Previous Welder Qualifications

Welding procedures, welders, and welding operators previously qualified by test may be accepted for this contract without re-qualification, subject to approval by the Contracting Officer provided that all the conditions specified in ASME B31.1 are met before a procedure can be used.

1.5 WELDING SAFETY

AWS Z49.1.

PART 2 PRODUCTS

Provide fuel oil system including equipment, materials, installation, workmanship, fabrication, assembly, erection, examination, inspection, and testing shall be in accordance with ASME B31.1, as modified and

supplemented by the contract specifications and drawings.

2.1 MATERIALS AND EQUIPMENT

2.1.1 Steel Pipe and Fittings

2.1.1.1 Pipe

ASTM A 53/A 53M, Type E or S Grade B Schedule 80.

2.1.1.2 Threaded Fittings

ASME B16.11, forged steel, Class 2000.

2.1.1.3 Threaded Fittings

ASME B16.3, black malleable iron, Class 150.

2.1.1.4 Flanges and Flange Fittings

ASME B16.5, steel flanges or convoluted steel flanges which meet the criteria of ASME BPVC SEC VIII D1. Flange faces shall have integral grooves of rectangular cross section which afford containment for self-energizing gasket material.

2.1.2 Copper Piping

2.1.2.1 Pipe and Tubing

ASTM B 88M, Type K or L, hard-drawn.

2.1.2.2 Flanges and Flanged Fittings

ANSI B16.24 Class 150.

2.1.2.3 Solder Joint Fittings

ASME B16.22 wrought copper.

2.1.3 Vent Piping

ASTM A 53 standard weight, zinc-coated steel with zinc-coated malleable iron fittings ASME B16.3.

2.1.4 Valves

2.1.4.1 Bronze Gate Valves

MSS SA 80 Class 125, 50 mm and smaller, wedge disk, nonrising stem.

2.1.4.2 Steel Gate Valves

API 600, oil service, Class 150.

Manufacturer: Velan, Model F14-0064C-02TY

2.1.4.3 Ball Valves

MS SP-72 for flanged or butt-welding ends and MSS SP-110 for threaded,

socket-welding, solder joint, grooved and flared ends.

2.1.4.4 Relief Valves

UL 842 steel or bronze bodies, corrosion-resistant valve seats, and positive closing to prevent leakage.

2.1.4.5 Check Valves

MIL-V-18436, Group A, Type I, Trim 3, Class 150.

2.1.4.6 Plug Valves

Bronze, PTFE seat, non-lubricated full port, square head, UL listed.

2.1.5 Piping Accessories

2.1.5.1 Unions

ASME B16.39 Class 150 pound.

a. Dielectric Unions: Union comprised of steel female pipe thread end and copper solder-joint end conforming to dimensional, strength, and pressure requirements of ASME B16.39, Class 1. Steel parts shall be galvanized or plated. Union shall have a water-impervious insulation barrier capable of limiting galvanic current to one percent of the short-circuit current in a corresponding bimetallic joint. When dry, it shall be able to withstand a 600-volt breakdown test.

2.1.5.2 Welding Filler Metal

ASME B31.4 and compatible with the materials to be welded.

2.1.5.3 Brazing Filler Metal

AWS A5.8 silver base alloy, with melting point not less than 593 degrees C.

2.1.5.4 Hangers, Supports, and Shields

Design, selection, fabrication, installation, and spacing shall conform to MSS SP-58 and MSS SP-69. Hangers, supports, rods, anchors, nuts, bolts, and washers shall be hot-dip galvanized.

2.1.5.5 Strainers

FS WW-S-2739 duplex basket type, with inlet and outlet on the same center line. Cast steel or fabricated steel body, 40 by 40 mesh ASTM 300-series stainless steel baskets. Open area of one basket shall be 2 1/2-times inlet or outlet piping area. Furnish one spare basket.

2.1.5.6 Gaskets

Provide one piece, factory cut, 1.60 mm thick, gaskets resistant to the effects of fuel oil and manufactured of fire-resistant materials. Provide full-face gaskets for flat-face flanged joints, and ring gaskets for raised-face flanged joints. Dimensions for gaskets shall be in accordance with ASME B16.21.

2.1.5.7 Sleeves in Masonry and Concrete Walls, Floors, Roofs

Provide ASTM A 53/A 53M Schedule 40 or Standard Weight, zinc-coated steel pipe sleeves.

2.1.5.8 Sleeves in Other Wall, Floor, and Roof Materials

Provide minimum 26 gage zinc-coated steel sheet sleeves in partitions and other than masonry and concrete walls, floors, and roof.

2.1.5.9 Floor, Walls, and Ceiling Plates

Plates shall be painted cast-iron, malleable iron, or steel.

2.1.5.10 Identification for Piping Aboveground

Labels for pipes 20 mm diameter and larger shall bear printed legends to identify contents of pipes and arrows to show direction of flow. Labels shall have color coded background to signify levels of hazard in accordance with ANSI A13.1. Legends and type and size of characters shall also conform to ANSI A13.1. Make labels of plastic sheet FS A-A-1689 with pressure sensitivity suitable for intended applications, or they may be premolded of plastic to fit over pipe. For pipes smaller than 20 mm diameter, provide brass identification tags 40 mm in diameter with legends in depressed black filled characters.

2.1.6 Meters

FS GG-M-2802 Style A piston or disk, size as indicated, for 15 liter per second maximum flow of Grade No. 2 fuel oil at -14 to 38 degrees C and 207 kPa (gage) maximum pressure. Meter shall be arranged for mounting in pipe line and shall have overrange protection. Casing shall be aluminum. Pressure drop through meter shall not exceed 14 kPa. Provide combination register-totalizer and water escape hole.

2.1.7 Instruments

2.1.7.1 Tank Gages

FS A-A-50568 buoyant force type with direct reading dial.

2.1.7.2 Pressure Gages

ASME B40.1 single style with 115 mm diameter dial for fuel, brass or aluminum case, bronze tube; accuracy within 2 percent of scale range. Provide scale range suitable for the intended service.

2.1.8 Protective Coating Materials for Aboveground Pipe and Tanks

Coatings shall be the products of one manufacturer and coating application procedure shall be in accordance with manufacturer's instruction. Tank surface preparation shall be abrasive blast clean steel surfaces in accordance with SSPC SP 10 to a surface profile of 0.013 to 0.051 mm.

2.1.8.1 External Coatings

Protect aboveground piping and steel tanks against atmospheric corrosion with a coat of organic, lead and chromate free, zinc-rich primer conforming to SSPC Paint 20, Type II applied to a minimum dry film thickness of 0.102

mm and finish with two coats of epoxy-polyamide topcoat conforming to MIL-P-24441. Apply a gray first topcoat conforming to MIL-P-24441/2, Formula 151 applied to a minimum dry film thickness of 0.076 mm and finish with a white second topcoat conforming to MIL-P-24441/3, Formula 152 applied to a minimum dry film thickness of 0.076 mm resulting in a total system minimum dry film thickness of 0.28 mm.

2.2 FUEL OIL AND PUMPING EQUIPMENT

2.2.1 Oil Pumps

Refer to Section 13202 for pumps.

2.3 FUEL OIL STORAGE TANKS AND ACCESSORIES

Construct fuel oil tanks of steel to comply with NFPA 30, NFPA 31 and UL 142.

2.3.1 Fuel Oil Storage and Day Tanks

See Section 13202.

2.3.2 Design, Construction, and Testing of Fuel Oil Tanks

Aboveground steel fuel oil tanks, UL 142, welded construction, UL listed.

2.3.3 Connections to Fuel Oil Tanks

Provide the following connections:

a. Goose-neck vent caps or caps conforming to MIL-C-19902.

b. Fill lines with removable single strainer and locking fill boxes.

c. A sounding connection, to permit entry of the gaging rod, with a locking cap. Provide graduated gaging rod and calibration chart.

d. Pump suction lines with internal vertical pipes extending to within 100 mm of tank bottom.

e. Fuel oil supply, fill and vent piping utilizing swing joint elbows to allow for ample tank movement and pipe expansion.

f. On steel tanks weld a 300 by 300 by 6 mm steel striker plate under gage and fill lines.

g. Nylon dielectric bushings on pipe connections to steel tanks.

h. Ball float valves on vent lines to restrict flow into tank when the tank reaches 90 percent full.

2.4 FUEL OIL PIPING HEAT TRACING

Heat tracing shall be per Section 15050.

PART 3 EXECUTION

3.1 INSTALLATION

Contractor shall provide installation of fuel oil piping system in accordance with applicable Armed Forces, regional or local regulations.

3.1.1 Fuel Oil Piping System

Install piping in out-of-the-way locations, in a manner that will minimize cutting of beams, girders, columns, or load-bearing members. Installation of oil piping and equipment in buildings shall conform to NFPA 30 and NFPA 31, except as indicated or specified herein.

3.1.2 Pipe Sleeves and Plates

Provide sleeves where piping passes through walls, floors, roofs, and partitions. Secure sleeves in proper position and location during construction. Provide sleeves of sufficient length to pass through entire thickness of walls, floors, roofs, and partitions. Provide not less than 6 mm space between exterior of piping or pipe insulation and interior of sleeve. Firmly pack space with insulation and calk at both ends of the sleeve with plastic waterproof cement which will dry to a firm but pliable mass, or provide a segmented elastomeric seal. Secure plates to pipes at sleeves.

3.1.3 Steel Piping

Steel piping 50 mm and smaller shall be threaded. Steel piping 65 mm and larger shall be butt-welded. Flanges may be used for valves and equipment installation.

3.1.4 Threaded Joints in Piping

Provide lubricant or polytetrafluoroethylene tape conforming to FS A-A-58092 on male threads of screwed joints. Red or white lead and zinc compound conforming to FS A-A-59313 may be used. Piping shall be free from fins and burrs. Ream or file out pipe ends to size of bore and remove chips. Attach screwed flanges by screwing the pipe through the flange, and reface pipe and flange accurately.

3.1.5 Copper Tubing

Cut with square ends and remove burrs and fins. Replace tubing cut, dented, or otherwise damaged with new tubing. Clean outside surface of tubing ends and inside recess of fittings to bright metal with wire brush or abrasive, then apply flux to outside surface of tubing ends and on the recess inside of fittings. Insert tubing to the full depth of fitting, then braze. Brazing procedure qualification and preparation and procedures for joints shall be in accordance with ASME B31.3.

3.1.6 Welding

3.1.6.1 Welding of Piping

Welding of joints in piping, butt welds, fillet welds, bends, loops, offsets, and cleaning of pipe shall be in accordance with ASME B31.1. Welds shall be visually examined and meet acceptance standards specified in Chapter VI of ASME B31.1.

3.1.6.2 Quality of Welds

Quality of welds, correction of defects, stress relieving, and preheating shall be in accordance with ASME B31.1.

3.1.6.3 Arc Welding and Gas Welding

In accordance with ASME BPVC SEC IX.

3.1.7 Unions and Flanges

Place unions and flanges where necessary to permit easy disconnection of piping and apparatus. Each connection having a threaded end valve shall have a union.

3.1.8 Valves

Install valves in positions accessible for operation and repair.

3.1.9 Fuel Oil Storage Tanks

Install storage tanks, vents and other connections in accordance with NFPA 30, NFPA 31, recommendations and published instructions of the manufacturer. Provide grounding of tanks directly through ground rods or through bonding to grounded network in accordance with NFPA 780. Fasten aboveground fuel oil tanks on a firm reinforced concrete foundation. Provide fireproofed steel supports between tank and foundation. Materials for sand, gravel, and concrete shall meet requirements specified in Section 03300, "Cast-In-Place Concrete".

3.2 FIELD QUALITY CONTROL

Prior to application of test pressure, remove or valve off piping components which may be damaged by test and install a calibrated test gage in the system. Maintain test pressure for at least one hour. In the event of leakage, locate and repair leak by rewelding and repeat test. Materials and equipment shall be subject to inspection at the installation site by the Contracting Officer.

3.2.1 Piping Test

Before final acceptance of the work, test each system as in service to demonstrate compliance with contract requirements. Furnish electricity, instruments, connecting devices, and personnel for the tests. Correct defects in work provided by the Contractor and repeat tests until work is in compliance with contract requirements. Government will furnish fuel for piping testing and flushing provided by the Contractor. Contractor shall be responsible for test fuel losses greater than 10 percent.

Perform hydrostatic test of fuel oil piping at 1 1/2 times system pressure or 689 kPa (gage) whichever is greater.

3.2.2 Steel Fuel Oil Storage Tanks

Test tanks for leaks by applying internal air pressure and using soapsuds, linseed oil or equivalent material on external welds. For horizontal tanks, test pressure shall be not less than 34 kPa (gage) nor more than 48 kPa (gage). During testing, tank shall be provided with a suitable

pressure relief device.

-- End of Section --

SECTION 15193

GASOLINE/DIESEL DISPENSING SYSTEMS

PART 1 GENERAL

1.1 REFERENCES

Publications listed below form a part of this specification to extent referenced. Publications are referred to within the text by basic designation only.

AMERICAN PETROLEUM INSTITUTE (API)

API Spec 5L	(2004) Line Pipe

ASME INTERNATIONAL (ASME)

ASME B16.11	(2002) Forged Fittings, Socket-Welding and Threaded
ASME B16.15	(1985; R 2004) Cast Bronze Threaded Fittings Classes 125 and 250
ASME B16.21	(1992) Nonmetallic Flat Gaskets for Pipe Flanges

ASTM INTERNATIONAL (ASTM)

ASTM A 53	(1999b) Pipe, Steel, Black and Hot-Dipped, Zinc-Coated, Welded and Seamless

U.S. NATIONAL ARCHIVES AND RECORDS ADMINISTRATION (NARA)

29 CFR 1910.1200	Hazard Communication

U.S. GENERAL SERVICES ADMINISTRATION (GSA)

FS A-A-52557	(Rev A)) Fuel Oil, Diesel; for Posts, Camps and Stations
FS L-C-530	(Rev C) Coating, Pipe, Thermoplastic Resin

U.S. DEPARTMENT OF DEFENSE (DOD)

MIL-G-3056	(Rev F; Int Am 3; Notice 1) Gasoline, Automotive, Combat

MANUFACTURERS STANDARDIZATION SOCIETY OF THE VALVE AND FITTINGS INDUSTRY (MSS)

MSS SP-80	(2003) Bronze Gate, Globe, Angle and Check Valves

NATIONAL FIRE PROTECTION ASSOCIATION (NFPA)

NFPA 30	(2003) Flammable and Combustible Liquids

	Code
NFPA 30A	(2003) Code for Motor Fuel Dispensing Facilities and Repair Garages
NFPA 70	(2005) National Electrical Code

UNDERWRITERS LABORATORIES (UL)

UL 674	(2003) Electric Motors and Generators for Use in Division 1 Hazardous (Classified) Locations
UL 698	(1995; Rev thru Mar 1999) Industrial Control Equipment for Hazardous (Classified) Locations
UL 886	(1994; Rev thru Apr 1999) Outlet Boxes and Fittings for Use in Hazardous (Classified) Locations

1.2 SUBMITTALS

Government approval is required for submittals with a "G" designation; submittals not having a "G" designation are for information only. When used, a designation following the "G" designation identifies the office that will review the submittal for the Government. Submit the following in accordance with Section 01330 SUBMITTAL PROCEDURES:

SD-03 Product Data

Pipe and fittings

Valves

Pumps

Dispensing system

SD-10 Operation and Maintenance Data

Pumps

Dispensing system

1.3 QUALITY ASSURANCE

1.3.1 Standard Products

Material and equipment shall be standard products of a manufacturer regularly engaged in the manufacture of the products. Materials shall be resistant to diesel fuel conforming to requirements of FS A-A-52557; and gasoline conforming to MIL-G-3056. Completed installation shall conform to applicable requirements of NFPA 30 and NFPA 30A.

1.3.2 Safety

Ensure employees are trained in requirements of 29 CFR 1910.1200 and understand information contained in material safety data sheets for their

protection against toxic and hazardous chemical effects.

PART 2 PRODUCTS

2.1 PRODUCT CARRIER PIPE AND FITTINGS

2.1.1 Steel Pipe

Black carbon steel, ASTM A 53, Type E or S, Grade A or B, or API Spec 5L, seamless or electric-weld, Grade A or B, Schedule 40.

2.1.2 Flexible Pipe Fittings

Provide bronze mechanical couplings supplied by pipe manufacturer.

2.1.3 Joint Compound

Joint compound for piping system shall be resistant to water and be suitable for use with fuel containing 40 percent aromatics.

2.1.4 Flange Gaskets

Provide non-asbestos compressed material in accordance with ASME B16.21, 1.60 mm thickness, full face or self-centering flat ring type. Gaskets shall contain aramid fibers bonded with styrene butadiene rubber (SBR) or nitrile butadiene rubber (NBR). NBR binder shall be used for hydrocarbon service.

2.2 DOUBLE-WALL SECONDARY CONTAINMENT PIPING

Provide double-wall containment piping system for buried lines. Exterior containment pipe shall be compatible with transported fluid and sized to contain 110 percent of the total volume of the primary inner pipe and additional equipment required, such as leak detection cables. Steel secondary containment piping shall be factory coated. Coating shall consist of termoplastic resin conforming to FS L-C-530.

2.3 VALVES

Valves shall be Class 150. Gate valves shall be wedge disc type, union bonnet, inside screw, rising stem, and shall have threaded ends within "O-ring" seal. Check valves shall be synthetic disc, swing check type with screwed ends. Valve body shall be bronze. Gate and check valves shall conform to MSS SP-80. Provide UL listed emergency shut-off valve in accordance with NFPA 30 with stainless steel main spring, fusible link, and test port..

2.4 DISPENSING SYSTEM

Dispensing system shall consist of product dispensing units, wiring, cabling, and accessory equipment.

2.4.1 Product Dispensing Units

Provide single sided, remote type, with one hose outlet suitable for single product delivery flow rate of 0.76 liter per second for MOGAS and 1.38 liters per second for diesel. Steel frame shall be capable of resisting normal vertical and lateral loads and secured to concrete with at least two 15 mm anchor bolts. Exterior panels shall be steel with baked enamel

finish. Provide manufacturer's standard unit which has the following functions:

a. Displays: Four-digit volume display to 999.9 liters.

b. Totalizer: Eight-digit (999,999.99) mechanical totalization with identification for each product volume in liters.

c. Accessories: Equip each assembly with accessories such as built-in air eliminators, line check valves, and emergency shut-off valve. Install centering ring or stabilizer bar to ensure proper shearing action for emergency shut-off valve if the dispensing unit is knocked from it's supports.

d. Interlocks: Units shall include nozzle supports interlocked to pump motor control switch to start and stop the pump by nozzle removal and replacement. Provide each unit with interlock switch and valve arrangement that prevents flow of product until meter is reset after dispensing nozzle is returned to holder.

e. Hose: Provide dispensing hose, gasoline and oil resistant, statically grounded, flexible in sub-zero temperatures. Provide a minimum of 3.70 meters of hose.

f. Nozzles: Dispensing nozzles shall be automatic shutoff type, without latch-open device, aluminum body, and full hand insulator to prevent splash-back.

g. Breakaway device: Provide each product hose with UL listed emergency breakaway device designed to retain liquid on both sides of breakaway point. Breakaway device shall have pressure balancing chamber to override line pressure to prevent nuisance breaks caused by a restriction in delivery hose diameter.

h. Pumps:

Provide internal gear-type rotary suction pumps with adjustable bypass valves and suction strainers.

i. Motors: Each motor shall be sized to start and drive equipment at specified capacity and duty cycle without exceeding nameplate rating of motor when operating at proper electrical system voltage. Installation of electrical equipment at dispensers, motors, and pump starter controllers shall be in compliance with Class 1, Group D hazardous location. Motors shall be suitable for 220 volts, 50 Hz power.

2.5 ABOVE GROUND PIPING

Provide ASTM A 53, schedule 40, hot-dip galvanized, threaded end connections; with ASME B16.11 hot-dip galvanized or ASME B16.15 bronze threaded fittings above grade at dispensers.

2.6 PETROLEUM STORAGE TANKS

As indicated on Drawings.

PART 3 EXECUTION

3.1 EARTHWORK

Excavation and backfilling for tanks and piping shall be as specified in Section 02316, "Excavation, Trenching, and Backfilling for Utilities Systems."

3.2 PIPING

Piping system shall be steel. Buried lines which carry product shall have double-walled containment system. Each section of underground pipe shall rest solidly on pipe bed. Piping connections to equipment shall be as required by equipment manufacturer. Make tank connections with two elbow swing joints or flexible connectors to allow for differential settlement. Threaded or mechanical joints shall be allowed at termination points of product carrying lines only. Test plug connections of secondary containment piping may be threaded. Clean pipe interior of foreign matter before lowering into trench and keep clean during installation. Pipe shall not be laid in water or when trench or weather conditions are unsuitable. When work is not in progress, close open ends of pipe and fittings so that water, earth, or other substances cannot enter. Replace pipe, fittings, or appurtenances found defective after installation. Make threaded joints with tapered threads and make tight with joint compound; compatible with intended petroleum products, applied to male threads only. This requirement shall not apply for gauging hatch or similar connections directly over the tank where line terminates in a fitting within a manhole designed to allow for differential settling. Flanges shall not be permitted on buried lines.

3.2.1 Installing Piping

Handle pipe and accessories to ensure sound, undamaged condition. Take care not to damage coating when lowering pipe into trench and when backfilling. Install nonmetallic pipe in accordance with pipe manufacturer's instructions. Lay underground pipelines with a minimum pitch of 25 mm per 15 meters. Horizontal sections shall have a minimum coverage of 457 mm. Piping shall be free of traps and shall drain toward tank. Where steel piping is to be anchored, weld pipe to structural steel member of anchor and patch abraded areas with protective coating or covering as specified. Fit piping passing through concrete or masonry construction with sleeves. Each sleeve shall be of sufficient length to pass through entire thickness of associated structural member and large enough to provide a minimum clear distance of 15 mm between pipe and sleeve, except where otherwise indicated. Sleeves through concrete may be 20-gage metal, fiber, or other approved material. Sleeves shall be located on center with piping and fastened in place. Space between sleeves and pipe shall be calked and filled with bituminous plastic cement or mechanical calking units designed for such use.

3.2.2 Installing Dispenser

Install on raised concrete foundation and protect against collision damage. Provide opening in island for product and electrical risers for each dispenser. Fill island riser holes with clean sand. Install dispensers in accordance with manufacturers' instructions and with emergency shut-off valve breaking point level with pad surface.

3.3 ELECTRICAL WORK

Provide switches and devices required for controlling electrical equipment. Pumps shall be wired and ready for connection to power circuit. Wiring, equipment, and fittings shall be explosion-proof in conformance with applicable requirements of UL 674, UL 698, and UL 886 for Class I, Division 1, Group C and D hazardous locations. Submit proof of such conformance. Electrical installations shall conform to requirements of NFPA 70.

3.4 Pneumatic Test

Test product carrier piping under pneumatic pressure of at least 1 1/4 times designed working pressure of the particular piping system, but not less than 345 kPa (gage). Test secondary piping under pneumatic pressure of 34 kPa (gage). Joints in secondary piping shall not be made until product carrier pipe is successfully pressure tested. Take care not to exceed pressure rating of various fittings such as the dry break vapor line adapter. Maintain pressure in product carrier piping for at least 2 hours during which there shall be no drop in pressure in each line greater than that allowed for thermal expansion and contraction. Maintain pressure in secondary piping for at least one hour. To facilitate this test, various sections of each piping system may be isolated to test each separately. Furnish tapped test adapted fittings that can be attached to each end of the section of line being tested that will permit direct connection to the piping from air compressor. No taps in line will be permitted. Furnish necessary equipment for testing. Gages shall be subject to testing and approval. In event leaks are detected, repair and repeat tests. Upon satisfactory completion of tests, relieve pressure and seal line. Make provisions to prevent displacement of piping during testing. Keep personnel clear of piping during pneumatic testing. Isolate equipment such as pumps, tanks, and meters from piping system during tests.

3.5 FLUSHING AND OPERATIONAL TEST

Do not install dispensing units during flushing and cleaning of piping. Install temporary piping or hose equipped with a strainer having not less than 40-mesh screen between supply pipe and tank fill connection on tank from which fuel is being pumped. Furnish temporary pump for flushing. Flush each dispensing system with same type of fuel intended for use in system until outflowing fuel is "clean" and "bright": clean means absence of sediment or emulsion; bright refers to fluorescent appearance of fuel that has no cloud or haze. Test each system to demonstrate performance requirements for which it was designed. Operate fuel dispensing equipment to demonstrate capability of fuel pumps to deliver desired flow and draw storage tank contents to level of pump inlet. When a portion of each system or a piece of equipment fails to pass tests, make repairs or adjustments and repeat test until satisfactory performance is achieved. Tests shall be witnessed by the Contracting Officer, and the Contractor shall notify the Contracting Officer 10 days before testing. Furnish calibrated instruments and equipment, as well as the fuel, required to clean and flush each system and to conduct tests. Upon completion of tests replace filters.

3.6 SCHEDULE

Some metric measurements in this section are based on mathematical conversion of inch-pound measurement, and not on metric measurement commonly agreed to by the manufacturers or other parties. The inch-pound and metric measurements shown are as follows:

Products	Inch-Pound	Metric
a. MOGAS Dispensing Unit		
Flow Rate	= 12 gpm	= 0.76 liters/sec
Diesel Dispensing Unit		
Flow Rate	= 21 gpm	= 1.38 liters/sec
b. Flange Gaskets		
Thickness	= 1/16 inch	= 1.60 mm
c. Buried Warning and Identification Tape		
Width	= 3 inches	= 80 mm

-- End of Section --

SECTION 15400

PLUMBING, GENERAL PURPOSE

PART 1 GENERAL

1.1 REFERENCES

The publications listed below form a part of this specification to the extent referenced. The publications are referred to within the text by the basic designation only.

AMERICAN NATIONAL STANDARDS INSTITUTE (ANSI)

ANSI Z21.22	(1999) Relief Valves and Automatic Gas Shutoff Devices for Hot Water Supply Systems

ASTM INTERNATIONAL (ASTM)

ASTM A 105/A 105M	(2003) Carbon Steel Forgings for Piping Applications
ASTM A 183	(2003) Carbon Steel Track Bolts and Nuts
ASTM A 193/A 193M	(2004c) Alloy-Steel and Stainless Steel Bolting Materials for High-Temperature Service
ASTM A 515/A 515M	(2003) Pressure Vessel Plates, Carbon Steel, for Intermediate- and Higher-Temperature Service
ASTM A 516/A 516M	(2004) Pressure Vessel Plates, Carbon Steel, for Moderate- and Lower-Temperature Service
ASTM A 53/A 53M	(2004a) Pipe, Steel, Black and Hot-Dipped, Zinc-Coated, Welded and Seamless
ASTM A 733	(2003) Welded and Seamless Carbon Steel and Austenitic Stainless Steel Pipe Nipples
ASTM A 74	(2004a) Cast Iron Soil Pipe and Fittings
ASTM B 32	(2004) Solder Metal
ASTM B 370	(2003) Copper Sheet and Strip for Building Construction
ASTM B 813	(2000e1) Liquid and Paste Fluxes for Soldering of Copper and Copper Alloy Tube
ASTM C 564	(2003a) Rubber Gaskets for Cast Iron Soil Pipe and Fittings

ASTM C 920	(2002) Elastomeric Joint Sealants
ASTM D 1785	(2004a) Poly(Vinyl Chloride)(PVC) Plastic Pipe, Schedules 40, 80, and 120
ASTM D 2000	(2003ae1) Rubber Products in Automotive Applications
ASTM D 2000	(2003ae1) Rubber Products in Automotive Applications
ASTM D 2241	(2004b) Poly(Vinyl Chloride) (PVC) Pressure-Rated Pipe (SDR Series)
ASTM D 2464	(1999e1) Threaded Poly(Vinyl Chloride) (PVC) Plastic Pipe Fittings, Schedule 80
ASTM D 2466	(2002) Poly(Vinyl Chloride)(PVC) Plastic Pipe Fittings, Schedule 40
ASTM D 2467	(2004e1) Poly(Vinyl Chloride) (PVC) Plastic Pipe Fittings, Schedule 80
ASTM D 2564	(2004) Solvent Cements for Poly(Vinyl Chloride) (PVC) Plastic Piping Systems
ASTM D 2665	(2004a) Poly(Vinyl Chloride) (PVC) Plastic Drain, Waste, and Vent Pipe and Fittings
ASTM D 2672	(1996a; R 2003) Joints for IPS PVC Pipe Using Solvent Cement
ASTM D 2846/D 2846M	(1999e1) Chlorinated Poly(Vinyl Chloride) (CPVC) Plastic Hot- and Cold-Water Distribution Systems
ASTM D 2855	(1996; R 2002) Making Solvent-Cemented Joints with Poly(Vinyl Chloride) (PVC) Pipe and Fittings
ASTM D 3138	(2004) Solvent Cements for Transition Joints Between Acrylonitrile-Butadiene-Styrene (ABS) and Poly(Vinyl Chloride) (PVC) Non-Pressure Piping Components
ASTM D 3139	(1998) Joints for Plastic Pressure Pipes Using Flexible Elastomeric Seals
ASTM D 3212	(1996a; R 2003) Joints for Drain and Sewer Plastic Pipes Using Flexible Elastomeric Seals
ASTM F 1760	(2001) Coextruded Poly(Vinyl Chloride) (PVC) Non-Pressure Plastic Pipe Having Reprocessed-Recycled Content
ASTM F 409	(2002) Thermoplastic Accessible and Replaceable Plastic Tube and Tubular

	Fittings
ASTM F 438	(2004) Socket-Type Chlorinated Poly(Vinyl Chloride) (CPVC) Plastic Pipe Fittings, Schedule 40
ASTM F 441/F 441M	(1999e1) Chlorinated Poly(Vinyl Chloride) (CPVC) Plastic Pipe, Schedules 40 and 80
ASTM F 477	(2002e1) Elastomeric Seals (Gaskets) for Joining Plastic Pipe
ASTM F 493	(2004) Solvent Cements for Chlorinated Poly(Vinyl Chloride) (CPVC) Plastic Pipe and Fittings
ASTM F 891	(2004) Coextruded Poly (Vinyl Chloride) (PVC) Plastic Pipe with a Cellular Core

AMERICAN SOCIETY OF SANITARY ENGINEERING (ASSE)

ASSE 1003	(2001) Water Pressure Reducing Valves
ASSE 1005	(1999) Water Heater Drain Valves
ASSE 1018	(2001) Trap Seal Primer Valves, Water Supply Fed
ASSE 1015	(1999) Performance Requirements for Double Check Back Flow Prevention Assemblies 2nd Double check Fire Protection Backflow Prevention Assemblies.

AMERICAN WATER WORKS ASSOCIATION(AWWA)

AWWA B300	(1999) Hypochlorites
AWWA B301	(2004) Liquid Chlorine
AWWA C606	(2004) Grooved and Shouldered Joints
AWWA EWW	(1998) Standard Methods for the Examination of Water and Wastewater
AWWA M20	(1973) Manual: Water Chlorination Principles and Practices

AMERICAN WELDING SOCIETY (AWS)

AWS A5.8	(1992) Filler Metals for Brazing and Braze Welding

ASME INTERNATIONAL (ASME)

ASME A112.14.1	(2003)Backwater Valves
ASME A112.21.2M	(1983) Roof Drains
ASME A112.36.2M	(1991; R 2002) Cleanouts

ASME A112.6.1M	(1997; R 2002) Floor Affixed Supports for Off-the-Floor Plumbing Fixtures for Public Use
ASME B1.20.1	(1983; R 2001) Pipe Threads, General Purpose, Inch
ASME B16.5	(2003) Pipe Flanges and Flanged Fittings
ASME B40.1	(1991; Special Notice 1992) Gauges - Pressure Indicating Dial Type - Elastic Element
ASME CSD-1	(2002) Control and Safety Devices for Automatically Fired Boilers
ASME A112.6.3	(2001) Floor and French Drains
ASME B 16.3	Malleable iron threaded fittings classes 150 and 300
ASME B 16.39	Malleable iron threaded unions classes 150, 250 and 300

CAST IRON SOIL PIPE INSTITUTE (CISPI)

CISPI 310	(2004) Coupling for Use in Connection with Hubless Cast Iron Soil Pipe and Fittings for Sanitary and Storm Drain, Waste, and Vent Piping Applications

DUETSCHES INSTITUTE FUR NORMUNG (DIN)

DIN 8061	Unplasticized polyvinyl chloride pipes - General quality requirements and testing
DIN 8062	(1997; C900a) Polyvinyl Chloride (PVC) Pressure Pipe, 4 In. Through 12 In., for Water Distribution
DIN 8063	Pipe joints components of unplasticized poly ()vinyl chloride) (PVC-U) for pipes under pressure - Part 5: General quality requirements, testing

INDUSTRIAL SAFETY EQUIPMENT ASSOCIATION (ISEA)

ISEA Z358.1	(1998) Emergency Eyewash and Shower Equipment

INTERNATIONAL CODE COUNCIL (ICC)

ICC Intl Plumbing Code	(2000)International Plumbing Code

MANUFACTURERS STANDARDIZATION SOCIETY OF THE VALVE AND FITTINGS INDUSTRY (MSS)

MSS SP-58	(2002) Pipe Hangers and Supports -

	Materials, Design and Manufacture
MSS SP-69	(2002) Pipe Hangers and Supports - Selection and Application
MSS SP-80	(2003) Bronze Gate, Globe, Angle and Check Valves
MSS SP-83	(2001) Class 3000 Steel Pipe Unions Socket-Welding and Threaded

PLUMBING AND DRAINAGE INSTITUTE (PDI)

PDI WH 201	(1992) Water Hammer Arresters

SOCIETY OF AUTOMOTIVE ENGINEERS INTERNATIONAL (SAE)

SAE J1508	(1997) Hose Clamp Specifications

U.S. NATIONAL ARCHIVES AND RECORDS ADMINISTRATION (NARA)

10 CFR 430	Energy Conservation Program for Consumer Products

1.2 MATERIAL AUTHENTICATION DATA INCLUDED IN DESIGN ANALYSIS

Government approval is required for submittals with a "G" designation; submittals not having a "G" designation are for information only. When used, a designation following the "G" designation identifies the office that will review the submittal for the Government. Submit the following in accordance with Section 01330 SUBMITTAL PROCEDURES:

SD-03 Product Data

Plumbing Fixture Schedule

Catalog cuts of specified plumbing fixtures system and related piping system and system location where installed.

Plumbing System

Diagrams, instructions, and other sheets proposed for posting. Manufacturer's recommendations for the installation.

SD-06 Test Reports

Tests, Flushing and Disinfection

Test reports in booklet form showing all field tests performed to adjust each component and all field tests performed to prove compliance with the specified performance criteria, completion and testing of the installed system. Each test report shall indicate the final position of controls.

Test of Backflow Prevention Assemblies.

Certification of proper operation shall be as accomplished in accordance with state regulations by an individual certified by the state to perform such tests. If no state requirement exists,

the Contractor shall have the manufacturer's representative test the device, to ensure the unit is properly installed and performing as intended. The Contractor shall provide written documentation of the tests performed and signed by the individual performing the tests.

SD-10 Operation and Maintenance Data

Plumbing System

Provide copies of the operation manual outlining the step-by-step procedures required for system startup, operation and shutdown. The manual shall include the manufacturer's name, model number, service manual, parts list, and brief description of allequipment and their basic operating features. Provide copies of the maintenance manual listing routine maintenance procedures, possible breakdowns and repairs. The manual shall include piping and equipment layout and simplified wiring and control diagrams of the system as installed.

Operation and Maintenance Manuals shall be as required in Section 01060: SPECIAL CLAUSE entitled OPERATION AND MAINTENANCE (O&M) DATA FOR EQUIPMENT AND SYSTEMS, and include the additional requirements as specified hereinafter. In the event of a conflict, the more detailed requirement shall apply.

1.3 STANDARD PRODUCTS

Specified materials and equipment shall be standard products of a manufacturer regularly engaged in the manufacture of such products. Specified equipment shall essentially duplicate equipment that has performed satisfactorily at least two years prior to bid opening.

1.3.1 Service Support

The equipment items shall be supported by service organizations. Submit a certified list of qualified permanent service organizations for support of the equipment which includes their addresses and qualifications. These service organizations shall be reasonably convenient to the equipment installation and able to render satisfactory service to the equipment on a regular and emergency basis during the warranty period of the contract.

1.3.2 Manufacturer's Nameplate

Each item of equipment shall have a nameplate bearing the manufacturer's name, address, model number, and serial number securely affixed in a conspicuous place; the nameplate of the distributing agent will not be acceptable.

1.4 DELIVERY, STORAGE, AND HANDLING

Handle, store, and protect equipment and materials to prevent damage before and during installation in accordance with the manufacturer's recommendations, and as approved by the Contracting Officer. Replace damaged or defective items.

1.5 ELECTRICAL WORK

Motors, motor controllers and motor efficiencies shall conform to the requirements of Section 16402 INTERIOR DISTRIBUTION SYSTEM. Electrical motor-driven equipment specified herein shall be provided complete with motors. Equipment shall be rated at 50 Hz, single phase, ac unless otherwise indicated. Where a motor controller is not provided in a motor-control center on the electrical drawings, a motor controller shall be as indicated. Motor controllers shall be provided complete with properly sized thermal-overload protection in each ungrounded conductor, auxiliary contact, and other equipment, at the specified capacity, and including an allowable service factor.

1.6 REGULATORY REQUIREMENTS

Plumbing work shall be in accordance with ICC International Plumbing Code.

1.7 PROJECT/SITE CONDITIONS

The Contractor shall become familiar with details of the work, verify dimensions in the field, and advise the Government of any discrepancy before performing any work.

PART 2 PRODUCTS

2.1 MATERIALS

Materials for various services shall be in accordance with TABLES I and II. Pipe schedules shall be selected based on service requirements. Pipe fittings shall be compatible with the applicable pipe materials. Plastic pipe, fittings, and solvent cement used for potable hot and cold water service shall bear the seal or other identification for potable water use. Material or equipment containing lead shall not be used in any potable water system. In line devices such as water meters, building valves, check valves, meter stops, valves, fittings and back flow preventers shall comply with requirements for safe drinking water. End point devices such as drinking water fountains, lavatory faucets, kitchen faucets, ice makers, supply stops and end point control valves used to dispense water for drinking must meet the requirements for drinking water safely and all applicable health code provisions.

Where locally produced materials that meet requirements are available, use these before imported materials.

2.1.1 Pipe Joint Materials

Grooved pipe and hubless cast-iron soil pipe shall not be used under ground. Solder containing lead shall not be used with copper pipe. Joints and gasket materials shall conform to the following:

a. Coupling for Cast-Iron Pipe: for hub and spigot type ASTM A 74, AWWA C606. For hubless type: CISPI 310.

b. Couplings for Grooved Pipe: Ductile Iron, Malleable Iron, or Copper, AWWA C606.

c. Flange Gaskets: Gaskets shall be made of non-asbestos material. Gaskets shall be flat, 1.6 mm (1/16 inch) thick, and contain Aramid fibers bonded with Styrene Butadiene Rubber (SBR) or Nitro

Butadiene Rubber (NBR). Gaskets shall be the full face or self centering flat ring type. Gaskets used for hydrocarbon service shall be bonded with NBR.

d. Neoprene Gaskets for Hub and Cast-Iron Pipe and Fittings: CISPI HSN-85.

e. Brazing Material: Brazing material shall conform to AWS A5.8, BCuP-5.

f. Brazing Flux: Flux shall be in paste or liquid form appropriate for use with brazing material. Flux shall be as follows: lead-free; have a 100 percent flushable residue; contain slightly acidic reagents; contain potassium borides; and contain fluorides.

g. Solder Material: Solder metal shall conform to ASTM B 32.

h. Solder Flux: Flux shall be liquid form, non-corrosive, and conform to ASTM B 813, Standard Test 1.

i. PTFE Tape: PTFE Tape, for use with Threaded Metal or Plastic Pipe.

j. Rubber Gaskets for Cast-Iron Soil-Pipe and Fittings (hub and spigot type and hubless type): ASTM C 564.

k. Rubber Gaskets for Grooved Pipe: ASTM D 2000, maximum temperature 110 degrees C (230 degrees F).

l. Flexible Elastomeric Seals: ASTM D 3139, ASTM D 3212 or ASTM F 477.

m. Bolts and Nuts for Grooved Pipe Couplings: Heat-treated carbon steel, ASTM A 183.

n. Solvent Cement for Transition Joints between ABS and PVC Nonpressure Piping Components: ASTM D 3138.

o. Plastic Solvent Cement for PVC Plastic Pipe: ASTM D 2564 and ASTM D 2855.

p. Plastic Solvent Cement for CPVC Plastic Pipe: ASTM F 493.

q. Flanged fittings including flanges, bolts, nuts, bolt patterns, etc., shall be in accordance with ASME B16.5 class 150 and shall have the manufacturer's trademark affixed in accordance with MSS SP-25. Flange material shall conform to ASTM A 105/A 105M. Blind flange material shall conform to ASTM A 516/A 516M cold service and ASTM A 515/A 515M for hot service. Bolts shall be high strength or intermediate strength with material conforming to ASTM A 193/A 193M.

r. Malleable-iron fittings, galvanized shall be used for diameters up to 2 1/2" or 65 mm shall be conforming to ASME B 16.3 class 150 or ASME B 16.39 or equivalent DIN or EN. .

2.1.2 Miscellaneous Materials

Miscellaneous materials shall conform to the following:

a. Water Hammer Arrester: PDI WH 201.

b. Copper, Sheet and Strip for Building Construction: ASTM B 370.

c. Hose Clamps: SAE J1508.

d. Supports for Off-The-Floor Plumbing Fixtures: ASME A112.6.1M.

e. Metallic Cleanouts: ASME A112.36.2M.

f. Plumbing Fixture Setting Compound: A preformed flexible ring seal molded from hydrocarbon wax material. The seal material shall be nonvolatile nonasphaltic and contain germicide and provide watertight, gastight, odorproof and verminproof properties.

g. Hypochlorites: AWWA B300.

h. Liquid Chlorine: AWWA B301.

i. Gauges - Pressure and Vacuum Indicating Dial Type - Elastic Element: ASME B40.1.

j. Thermometers: Mercury shall not be used in thermometers.

2.1.3 Pipe Insulation Material

Insulation shall be as specified in Section 15080 THERMAL INSULATION FOR MECHANICAL SYSTEMS.

2.2 PIPE HANGERS, INSERTS, AND SUPPORTS

Pipe hangers, inserts, and supports shall conform to MSS SP-58 and MSS SP-69.

2.3 VALVES

Valves shall be provided on supplies to equipment and fixtures. Valves 65 mm (2-1/2 inches) and smaller shall be bronze or brass with threaded bodies for pipe. Valves 80 mm (3 inches) and larger shall have flanged iron bodies and bronze trim. Pressure ratings shall be based upon the application. Valves shall conform to the following standards:

Description	Standard
Backwater Valves	ASME A112.14.1
Vacuum Relief Valves	ANSI Z21.22
Water Pressure Reducing Valves	ASSE 1003
Water Heater Drain Valves	ASSE 1005
Trap Seal Primer Valves	ASSE 1018
Temperature and Pressure Relief Valves for Hot Water Supply Systems	ANSI Z21.22
Temperature and Pressure Relief Valves for Automatically Fired Hot	ASME CSD-1 Safety Code No.,

2.3.1 Backwater Valves

Backwater valves shall be either separate from the floor drain or a combination floor drain, P-trap, and backwater valve, as shown. Valves shall have cast-iron bodies with cleanouts large enough to permit removal of interior parts. Valves shall be of the flap type, hinged or pivoted, with revolving disks. Hinge pivots, disks, and seats shall be nonferrous metal. Disks shall be slightly open in a no-flow no-backwater condition. Cleanouts shall extend to finished floor and be fitted with threaded countersunk plugs.

2.3.2 Wall Faucets/Spigots

Wall faucets with vacuum-breaker backflow preventer shall be brass with 20 mm (3/4 inch) male inlet threads, hexagon shoulder, and 20 mm (3/4 inch) hose connection. Faucet handle shall be securely attached to stem.

2.3.2.1 Room Hose Bibbs and Floor Drains

Room hose bibb and floor drains shall be provided as required. Afghan dining facility kitchen area clean-up hose bib to be supplied with connecting hose on reel including approximately 12 m of hose. Provide clean-up spray nozzle with hose assembly.

2.3.3 Gate Valvess

Gate valves shall be designed for a working pressure of not less than 1.03 MPa (150 psi). Valve connections shall be as required for the piping in which they are installed. Valves shall have a clear waterway equal to the full nominal diameter of the valve, and shall be opened by turning counterclockwise.

a. Valves smaller than 80 mm (3 inches) shall be bronze or brass and shall conform to MSS SP-80, Type 1, Class 150, DIN 3352, BS 21, or ASME B1.20.1.

b. Valves 80 mm (3 inches) and larger shall be iron body, bronze mounted, and shall conform to AWWA C500, DIN 3352, or BS 5163. Flanges shall not be buried. An approved pit shall be provided for all flanged connections.

c. Resilient-Seated Gate Valves: For valves 80 to 300 mm (3 to 12 inches) in size, resilient-seated gate valves shall conform to AWWA C509, DIN 3352 or BS 5163.

2.3.4 Balancing Valves

Balancing valves shall be ball type with the size and locaton as shown on drawings, Valve shall have bronze body, brass ball or as per moanufacturer recommendation. Valve shall have memory stop indicator to permit preset to a fixed open postion to allow valve closing for service without disturbing valve setting.

2.4 Relief Valves

Water heaters and hot water storage tanks shall have a combination pressure and temperature (P&T) relief valve. The pressure relief element of a P&T relief valve shall have adequate capacity to prevent excessive pressure buildup in the system when the system is operating at the maximum rate of heat input. The temperature element of a P&T relief valve shall have a relieving capacity which is at least equal to the total input of the heaters when operating at their maximum capacity. Relief valves shall be rated according to ANSI Z21.22. Relief valves for systems where the maximum rate of heat input is less than 59 kW (200,000 Btuh) shall have 20 mm (3/4 inch) minimum inlets, and 20 mm (3/4 inch) outlets. Relief valves for systems where the maximum rate of heat input is greater than 59 kW (200,000 Btuh) shall have 25 mm (1 inch) minimum inlets, and 25 mm (1 inch) outlets. The discharge pipe from the relief valve shall be the size of the valve outlet.

2.5 Pressure Reducing Valve (PRV)

A. Designed to automatically reduce a higher inlet pressure to maintain a set lower downstream pressure regardless of changing flow rate and varying inlet pressure. Main valve to close drip tight when downstream pressure exceeds set pressure.

2.6 Thermostatic Mixing Valves

Mixing valves, thermostatic type, pressure-balanced or combination thermostatic and pressure-balanced shall be line size and shall be constructed with rough or finish bodies either with or without plating. Each valve shall be constructed to control the mixing of hot and cold water and to deliver water at a desired temperature regardless of pressure or input temperature changes. The control element shall be of an approved type. The body shall be of heavy cast bronze, and interior parts shall be brass, bronze, corrosion-resisting steel or copper. The valve shall be equipped with necessary stops, check valves, unions, and sediment strainers on the inlets. Mixing valves shall maintain water temperature within 2 degrees C of any setting.

2.7 FIXTURES

Fixtures shall be water conservation type. Vitreous china, nonabsorbent, hard-burned, and vitrified throughout the body shall be provided. Porcelain enameled ware shall have specially selected, clear white, acid-resisting enamel coating evenly applied on surfaces. No fixture will be accepted that shows cracks, crazes, blisters, thin spots, or other flaws. Fixtures shall be equipped with appurtenances such as traps, faucets, stop valves, and drain fittings. Each fixture and piece of equipment requiring connections to the drainage system, except grease interceptors, shall be equipped with a trap. Brass expansion or toggle bolts capped with acorn nuts shall be provided for supports, and polished chromium-plated pipe, valves, and fittings shall be provided where exposed to view. Fixtures with the supply discharge below the rim shall be equipped with backflow preventers. Internal parts of flush and/or flushometer valves, shower mixing valves, shower head face plates, pop-up stoppers of lavatory waste drains, and pop-up stoppers and overflow tees and shoes of bathtub waste drains may contain acetal resin, fluorocarbon, nylon, acrylonitrile-butadiene-styrene (ABS) or other plastic material, if the material has provided satisfactory service under actual commercial or industrial operating conditions for not less than 2 years. Plastic in

contact with hot water shall be suitable for 82 degrees C (180 degrees F) water temperature. Plumbing fixtures shall be as indicated in paragraph PLUMBING FIXTURE SCHEDULE.

2.7.1 Lavatories

Enameled cast iron lavatories shall be provided with two integral molded lugs on the back-underside of the fixture and drilled for bolting to the wall in a manner similar to the hanger plate.

2.8 BACKFLOW PREVENTERS

Backflow preventers shall be approved and listed by the Foundation For Cross-Connection Control & Hydraulic Research. Reduced pressure principle assemblies, double check valve assemblies, atmospheric (nonpressure) type vacuum breakers, and pressure type vacuum breakers shall be tested, approved, and listed in accordance with FCCCHR-CCC Manual-9, Section 10. Blackflow preventers with double check valve shall conform to ASSE 1015 Backflow preventers with intermediate atmospheric vent shall conform to ASSE 1012. Reduced pressure principle backflow preventers shall conform to ASSE 1013. Hose connection vacuum breakers shall conform to ASSE 1011. Pipe applied atmospheric type vacuum breakers shall conform to ASSE 1001. Pressure vacuum breaker assembly shall conform to ASSE 1020. Air gaps in plumbing systems shall conform to ASME A112.1.2.

2.9 DRAINS

2.9.1 Floor or Shower Drains (FD-A)

Floor drains shall consist of a galvanized body, integral seepage pan, and adjustable perforated or slotted chromium-plated bronze, nickel-bronze, or nickel-brass strainer, consisting of grate and threaded collar. Floor drains shall be cast iron except where metallic waterproofing membrane is installed. Drains shall be of double drainage pattern for embedding in the floor construction. The seepage pan shall have weep holes or channels for drainage to the drainpipe. The strainer shall be adjustable to floor thickness. A clamping device for attaching flashing or waterproofing membrane to the seepage pan without damaging the flashing or waterproofing membrane shall be provided when required. Drains shall be provided with threaded connection. Between the drain outlet and waste pipe, a neoprene rubber gasket may be installed, provided that the drain is specifically designed for the rubber gasket compression type joint. Floor and shower drains shall conform to ASME A112.21.1M.

2.9.1.1 Drains

Drains and backwater valves installed in connection with waterproofed floors or shower pans shall be equipped with bolted-type device to securely clamp flashing.

2.9.2 Area Drains (AD-1)

Area drains shall be plain pattern with polished stainless steel perforated or slotted grate and bottom outlet. The drain shall be circular or square with a 300 mm (12 inch) nominal overall width or diameter and 250 mm (10 inch) nominal overall depth. Drains shall be cast iron with manufacturer's standard coating. Grate shall be easily lifted out for cleaning. Outlet shall be suitable for inside caulked connection to drain pipe. Drains shall conform to ASME A112.6.3.

2.9.3 Floor Sinks (FS)

Floor sinks shall be square, with 300 mm (12 inch) nominal overall width or diameter and 250 mm (10 inch) nominal overall depth. Floor sink shall have an acid-resistant enamel interior finish with cast-iron body, aluminum sediment bucket, and perforated grate of cast iron in industrial areas and stainless steel in finished areas. The outlet pipe size shall be as indicated or of the same size as the connecting pipe.

2.10 Boiler Room or Trench Drains (FD-B)

Boiler room drains shall have combined drain and trap, hinged grate, removable bucket, and threaded brass cleanout with brass backwater valve. The removable galvanized cast-iron sediment bucket shall have rounded corners to eliminate fouling and shall be equipped with hand grips. Drain shall have a minimum water seal of 100 mm. The grate area shall be not less than 0.065 square meters.

2.11 Pit Drains (PD-1)

Pit drains shall consist of a body, integral seepage pan, and nontilting perforated or slotted grate. Drains shall be of double drainage pattern suitable for embedding in the floor construction. The seepage pan shall have weep holes or channels for drainage to the drain pipe. Membrane or flashing clamping device shall be provided when required. Drains shall be cast iron with manufacturer's standard coating. Drains shall be circular and provided with bottom outlet suitable for inside caulked connection, unless otherwise indicated. Drains shall be provided with separate cast-iron "P" traps, unless otherwise indicated.

2.12 Sight Drains (OSD)

Sight drains shall consist of body, integral seepage pan, and adjustable strainer with perforated or slotted grate and funnel extension. The strainer shall have a threaded collar to permit adjustment to floor thickness. Drains shall be of double drainage pattern suitable for embedding in the floor construction. A clamping device for attaching flashing or waterproofing membrane to the seepage pan without damaging the flashing or membrane shall be provided for other than concrete construction. Drains shall have a galvanized heavy cast-iron body and seepage pan and chromium-plated bronze, nickel-bronze, or nickel-brass strainer and funnel combination. Drains shall be provided with threaded connection and with a separate cast-iron "P" trap, unless otherwise indicated. Drains shall be circular, unless otherwise indicated. The funnel shall be securely mounted over an opening in the center of the strainer. Minimum dimensions shall be as follows:

Area of strainer and collar 0.023 square meters (36 square inches)

Height of funnel 95 mm (3-3/4 inches)
Diameter of lower portion 50 mm (2 inches)
of funnel
Diameter of upper portion 100 mm (4 inches)
of funnel

2.13 Roof Drains and Expansion Joints (RD-1)

Roof drains shall conform to ASME A112.21.2M, with dome and integral flange, and shall have a device for making a watertight connection between roofing and flashing. The whole assembly shall be galvanized heavy pattern cast iron. For aggregate surface roofing, the drain shall be provided with a gravel stop. On roofs other than concrete construction, roof drains shall be complete with underdeck clamp, sump receiver, and an extension for the insulation thickness where applicable. A clamping device for attaching flashing or waterproofing membrane to the seepage pan without damaging the flashing or membrane shall be provided when required to suit the building construction. Strainer openings shall have a combined area equal to twice that of the drain outlet. The outlet shall be equipped to make a proper connection to threaded pipe of the same size as the downspout. An expansion joint of proper size to receive the conductor pipe shall be provided. The expansion joint shall consist of a heavy cast-iron housing, brass or bronze sleeve, brass or bronze fastening bolts and nuts, and gaskets or packing. The sleeve shall have a nominal thickness of not less than 3.416 mm. Gaskets and packing shall be close-cell neoprene, O-ring packing shall be close-cell neoprene of 70 durometer. Packing shall be held in place by a packing gland secured with bolts.

2.14 TRAPS

Unless otherwise specified, traps shall be plastic per ASTM F 409 or copper-alloy adjustable tube type with slip joint inlet and swivel. Traps shall be without a cleanout. Tubes shall be copper alloy with walls not less than 0.813 mm (0.032 inch) thick within commercial tolerances, except on the outside of bends where the thickness may be reduced slightly in manufacture by usual commercial methods. Inlets shall have rubber washer and copper alloy nuts for slip joints above the discharge level. Swivel joints shall be below the discharge level and shall be of metal-to-metal or metal-to-plastic type as required for the application. Nuts shall have flats for wrench grip. Outlets shall have internal pipe thread, except that when required for the application, the outlets shall have sockets for solder-joint connections. The depth of the water seal shall be not less than 50 mm (2 inches). The interior diameter shall be not more than 3.2 mm (1/8 inch) over or under the nominal size, and interior surfaces shall be reasonably smooth throughout. A copper alloy "P" trap assembly consisting of an adjustable "P" trap and threaded trap wall nipple with cast brass wall flange shall be provided for lavatories. The assembly shall be a standard manufactured unit and may have a rubber-gasketed swivel joint.

2.15 GREASE INTERCEPTOR

Grease interceptor of the size indicated shall be of reinforced concrete, or equivalent capacity commercially available steel grease interceptor with removable three section, 9.5 mm (3/8 inch) checker-plate cover(s), and shall be installed outside the building. Steel grease interceptor shall be installed in a concrete pit and shall be acid resistant as recommended by the manufacturer. Concrete shall have 21 MPa minimum compressive strength at 28 days. Provide flow control fitting.

2.16 WATER HEATERS

Water heater types and capacities shall be as indicated on Drawings. Each water heater shall have replaceable anodes. Each primary water heater shall have controls with an adjustable range that includes 32 to 71 degrees

C (90 to 160 degrees F). Each gas-fired water heater and booster water heater shall have controls with an adjustable range that includes 49 to 82 degrees C (120 to 180 degrees F). Hot water systems utilizing recirculation systems shall be tied into building off-hour controls. The thermal efficiencies and standby heat losses shall conform to Table III for each type of water heater specified. The only exception is that storage water heaters and hot water storage tanks having more than 2000 liters storage capacity need not meet the standard loss requirement if the tank surface area is insulated to R-12.5 and if a standing light is not used. Plastic materials polyetherimide (PEI) and polyethersulfone (PES) are forbidden to be used for vent piping of combustion gases.

2.16.1 Automatic Storage Type

Heaters shall be complete with control system, temperature gauge, and pressure gauge, and shall have combination pressure and temperature relief valve. An phenolic coating shall be provided.

2.16.1.1 Electric Type

Electric water heaters types and capacities shall be as indicated on Drawings. Electric water heaters shall be of the cylindrical, pressure type, comprised of inner tank, insulation, outer jacket, immersion type electric heating elements, thermostat, control box, pressure relief valve, water connections and either floor mounting legs or wall brackets suitable for the type and size of heater used.

Inner tank shall be constructed of heavy gauge welded steel with a corrosion-resistant lining, designed for a working pressure of minimum 6 bar. Outer jacket shall be of enamel or epoxy polyester painted heavy gauge steel. Space between the tank and outer jacket shall be filled with insulation of adequate thickness for minimum heat loss. Each water heater shall have replacable magnesium anodes to protect the heater against corrosion. Each water heater shall have temperature controls with an adjustable range that includes 32 to 71 degrees C.

Electric type water heaters shall be equipped with heating elements in quantities required to meet required operating parameters. An enamel coating shall be provided.

2.17 HOT-WATER STORAGE TANKS

Hot-water storage tanks shall be constructed by one manufacturer, ASME stamped for the working pressure, and shall have the National Board (ASME) registration. The tank shall be cement-lined or glass-lined steel type. The heat loss shall conform to TABLE III as determined by the requirements of ASHRAE 90.1. Each tank shall be equipped with a thermometer. Thermometer shall have a separable socket suitable for a 20 mm (3/4 inch) tapped opening. Tanks shall be equipped with a pressure gauge 155 mm (6 inch) minimum diameter face. Insulation shall be as specified in Section 15080 THERMAL INSULATION FOR MECHANICAL SYSTEMS. Storage tank capacity shall be as shown.

2.18 COMPRESSED AIR SYSTEM

2.18.1 Air Compressors

Air compressor unit shall be a factory-packaged assembly, including 380 volt motor controls, switches, wiring, accessories, and motor controllers.

Tank-mounted air compressors shall be manufactured to comply with regulatory requirements. Air compressors shall have manufacturer's name and address, together with trade name, and catalog number on a nameplate securely attached to the equipment. Each compressor shall start and stop automatically at upper and lower pressure limits of the system and have automatic-off switch, a time delay relay shall allow the compressor to operate for an adjustable length of time unloaded, then stop the unit. Guards shall shield exposed moving parts. Air compressor shall be either single or duplex style.Each duplex compressor system shall be provided with alternation system as standard with manufacturer. Each compressor motor shall be provided with an across-the-line-type magnetic controller. An intake air filter and silencer shall be provided with each compressor. Aftercooler and moisture separator shall be installed between compressors and air receiver to remove moisture and oil condensate before the air enters the receiver. Aftercoolers shall be either air- or water-cooled, as indicated. The air shall pass through a sufficient number of tubes to affect cooling. Tubes shall be sized to give maximum heat transfer. Water to unit shall be controlled by a solenoid or pneumatic valve, which opens when the compressors start and closes when the compressors shut down. Cooling capacity of the aftercooler shall be sized for the total capacity of the compressors. Means shall be provided for draining condensed moisture from the receiver by an automatic float type trap. Capacities of air compressors and receivers shall be as indicated.

2.18.2 Lubricated Compressors

Compressors shall be two-stage, Direct or V-belt drive, capable of operating continuously against their designed discharge pressure, and shall operate at a speed not in excess of 1800 rpm. Compressors shall have the capacity and discharge pressure indicated. Compressors shall be assembled complete on a common subbase. The compressor main bearings shall be either roller or ball. The discharge passage of the high pressure air shall be piped to the air receiver with a copper pipe or tubing. A pressure gauge calibrated to 1.03 MPa (150 psi) and equipped with a gauge cock and pulsation dampener shall be furnished for installation adjacent to pressure switches.

2.18.3 Rotary Air Compressor

The air compressor shall be packaged rotary type. Include electric motor driver, integral gears and cases, staged compressors, intercoolers and moisture separators, instruments, controls, lubrication system, steel base and accessories. The aftercoolers may be mounted separately to meet the performance requirements. Capacity shall be as indicated.

2.18.4 Air Receivers

Receivers shall be designed for 1.38 MPa (200 psi) working pressure. Receivers shall be factory air tested to 1-1/2 times the working pressure. Receivers shall be equipped with safety relief valves and accessories, including pressure gauges and drain valve. The outside of air receivers may be galvanized or supplied with commercial enamel finish.

2.18.5 Intake Air Supply Filter

Dry type air filter shall be provided having a collection efficiency of 99 percent of particles larger than 10 microns. Filter body and media shall withstand a maximum 862 kPa (125 psi), capacity as indicated.

2.18.6 Pressure Regulators

The air system shall be provided with the necessary regulator valves to maintain the desired pressure for the installed equipment. Regulators shall be designed for a maximum inlet pressure of 862 kPa (125 psi) and a maximum temperature of 60 degrees C (140 degrees F). Regulators shall be single-seated, pilot-operated with valve plug, bronze body and trim or equal, and threaded connections. The regulator valve shall include a pressure gauge and shall be provided with an adjustment screw for adjusting the pressure differential from 0 kPa to 862 kPa (0 to 125 psi). Regulator shall be sized as indicated.

2.18.7 Compressed Air Dryers

Provide low pressure compressed air dryers of the mechanical refrigeration type, equipped with an automatic temperature shutdown switch to prevent freezing, a regenerative air to air exchanger, and a main compressed air cooling exchanger. Refrigeration system shall cool compressed air to dry the air. Dryer shall have no internal traps or filters and shall have pressure drop not greater than 20.68 kPa (3 psi). Air shall leave the dryer at a dew point temperature of 3 degrees C, based on an inlet temperature of 38 degrees C.

2.18.7.1 Air Circuit

a. Regenerative Heat Exchanger: Inlet compressed air to outlet compressed air heat exchanger designed to reduce cooling load at design conditions minus 7 degrees C (20 degrees F) by inlet air precooling.

b. Main Heat Exchanger: Single-pass, with air in the tubes, heat sink, direct expansion, or flooded cooler type.

c. Separator: code stamp not required; moisture separator low velocity type incorporating change of air flow direction to prevent moisture carryover.

d. Dryer Operating Pressure: 862 kPa (125 psig) working pressure.

e. Drain Line: Provide with exterior mounted condensate trap to facilitate servicing.

2.18.7.2 Refrigeration System

a. Refrigeration Compressor: Hermetic, semi-hermetic, or open reciprocating type equipped with automatic start-stop or unloading capacity control; standard components include inherent motor protection, crankcase oil strainer, and suction screen. Refrigerant shall be R-134a.

b. Dryer Controls: Capable of automatic 0 to 100 percent capacity control. Refrigeration controls shall maintain pressure dew point within the specified range without freezing of condensate. Controls shall include such devices as capillary tube, expansion valve, suction pressure regulator, thermostat, or other approved devices as standard with the manufacturer. Dryer shall have automatic shutdown switch sensor located at point of lowest temperature to prevent freezing.

c. Refrigerant dryer and suction line strainer.

d. Air-cooled condenser, with condenser fan and motor.

2.18.7.3 Instrumentation and Control

Include control panel in dryer cabinet containing:

a. Indicators for the Following Services: Inlet air pressure gage, discharge air pressure gage, inlet air temperature gage, main exchanger temperature gage, "Power On" light, power interruption light, and high temperature light.

b. Electrical Relays: Locate in an enclosed portion of the panel, access.ble for ease of servicing.

c. Controls and Interlocks: To maintain required compressed air dew point and to cycle air-cooled condenser with refrigeration compressor, while maintaining head pressure control with low ambient temperature.

2.18.8 Compressed Air Lubricator

The lubricator shall be oil-fog lubricator featuring adjustment needle on top of the transparent sight dome. The Lubricator drip rate shall be adjustment. The lubricator can be filled while under pressure. The increase or decrease markings on castings shall show direction to turn adjustment screw for oil drip set-up. The units shall have threaded ports for direct connection to pipe. The unit body shall be of metal or the oil capacity shall be 120 ml (4 Oz). The maximum Inlet Pressure shall be 10.4 bar (150 PSIG). The unit shall have 9.5 mm (3/8") port with flow rating of 47 dm 3/s (100 scfm)

2.18.9 Compressed Air Filter Regulator

The filter regulator combination unit shall be compact design with a common inlet and a common outlet. The unit shall have threaded ports for direct connection to pipe. The unit shall have push-pull, non-rising knob for one-hand adjustment. The marking on the knob indicate pressure increase and decrease. The design shall be balanced valve-type diaphragm regulation. The valve and diaphragm can be replaced without removing unit from line. The unit shall have bayonet bowl attachment for filter element removal and automatic drain. The unit body shall be of metal or Polycarbonate. The bowl guard shall be of metal. The filter element shall be porous polypropylene.

2.19 NEUTRALIZATION TANKS (NT)

Plastic Neutralization Tanks:

A. High density Polyethylene or Polypropylene plastic materials, with removable, gastight cover; interior, sidewall, dip-tube inlet; outlet, vent; and threaded or flanged, sidewall pipe connections.

(1) Tank Capacity: As indicated on Drawings.
2. Traffic Cover: Heavy-duty pedestrian or light duty vehicular, steel plate over plastic, bolted.
3. Limestone: Chips or lumps, with more than 90 percent

calcium-carbonate content and 25 mm to 75 mm diameter.
4. Install neutralization tank in concrete vault, at location indicated on the drawings.

2.20 OIL INTERCEPTOR

Provide large capacity, acid-resistant coated interior and exterior fabricated steel oil interceptor with bronze cleanout plug and visible double wall trap seal, removable combination pressure equalizing/flow diffusing baffle and sediment bucket, horizontal baffle, specific gravity oil draw-off valve assembly connections on either side. Interceptor shall have secured gasketed non-skid cover complete with flow control fitting and shall be furnished with inlet and outlet in high position.

2.21 IN-LINE CIRCULATORS

A. Description: In-line circulator, rated for 125-psig minimum working pressure and minimum continuous water temperature of 203 deg F.

1. Impeller: ASTM B 36/B 36M, rolled brass; or ASTM B 584, cast bronze; or corrosion resistant composite PES.
3. Seal: Mechanical.
4. Shaft and Sleeve: Steel or ceramic shaft.
5. Pump Bearings: Oil-lubricated, bronze-journal, thrust type, or carbon axial.

a. Motor Size: For motors larger than 1/2 hp, select motor size that will not overload through full range of pump performance curve.

PART 3 EXECUTION

3.1 GENERAL INSTALLATION REQUIREMENTS

The plumbing system shall be installed complete with necessary fixtures, fittings, traps, valves, and accessories. Water and drainage piping shall be extended 1.5 m outside the building, unless otherwise indicated. A gate valve or ball valve and drain shall be installed on the water service line inside the building approximately 150 mm above the floor from point of entry. Piping shall be connected to the exterior service lines or capped or plugged if the exterior service is not in place. Sewer and water pipes shall be laid in separate trenches, except when otherwise shown. Exterior underground utilities shall be at least 300 mm below the finish grade or as indicated on the drawings. If trenches are closed or the pipes are otherwise covered before being connected to the service lines, the location of the end of each plumbing utility shall be marked with a stake or other acceptable means. Valves shall be installed with control no lower than the valve body.

3.1.1 Water Pipe, Fittings, and Connections

3.1.1.1 Utilities

The piping shall be extended to outlets, and equipment. The cold-water piping system shall be arranged and installed to permit draining. The supply line to each item of equipment shall be equipped with a shutoff valve to enable isolation of the item for repair and maintenance without interfering with operation of other equipment. Supply piping to devices shall be anchored to prevent movement.

3.1.1.2 Cutting and Repairing

The work shall be carefully laid out in advance, and unnecessary cutting of construction shall be avoided. Damage to building, piping, wiring, or equipment as a result of cutting shall be repaired by mechanics skilled in the trade involved.

3.1.1.3 Protection of Fixtures, Materials, and Equipment

Pipe openings shall be closed with caps or plugs during installation. Fixtures and equipment shall be tightly covered and protected against dirt, water, chemicals, and mechanical injury. Upon completion of the work, the fixtures, materials, and equipment shall be thoroughly cleaned, adjusted, and operated. Safety guards shall be provided for exposed rotating equipment.

3.1.1.4 Mains, Branches, and Runouts

Piping shall be installed as indicated. Pipe shall be accurately cut and worked into place without springing or forcing. Structural portions of the building shall not be weakened. Aboveground piping shall run parallel with the lines of the building, unless otherwise indicated. Branch pipes from service lines may be taken from top, bottom, or side of main, using crossover fittings required by structural or installation conditions. Supply pipes, valves, and fittings shall be kept a sufficient distance from other work and other services to permit not less than 12 mm between finished covering on the different services. Bare and insulated water lines shall not bear directly against building structural elements so as to transmit sound to the structure or to prevent flexible movement of the lines. Water pipe shall not be buried in or under floors unless specifically indicated or approved. Changes in pipe sizes shall be made with reducing fittings. Use of bushings will not be permitted except for use in situations in which standard factory fabricated components are furnished to accommodate specific accepted installation practice. Change in direction shall be made with fittings, except that bending of pipe 100 mm (4 inches) and smaller will be permitted, provided a pipe bender is used and wide sweep bends are formed. The center-line radius of bends shall be not less than six diameters of the pipe. Bent pipe showing kinks, wrinkles, flattening, or other malformations will not be acceptable.

3.1.1.5 Pipe Drains

Pipe drains indicated shall consist of 20 mm (3/4 inch) hose bibb with renewable seat and gate or ball valve ahead of hose bibb. At other low points, 20 mm (3/4 inch) brass plugs or caps shall be provided. Disconnection of the supply piping at the fixture is an acceptable drain.

3.1.1.6 Expansion and Contraction of Piping

Allowance shall be made throughout for expansion and contraction of waterpipe. Each hot-water and hot-water circulation riser shall have expansion loops or other provisions such as offsets, changes in direction, etc., where indicated and/or required. Risers shall be securely anchored as required or where indicated to force expansion to loops. Branch connections from risers shall be made with ample swing or offset to avoid undue strain on fittings or short pipe lengths. Horizontal runs of pipe over 15 m in length shall be anchored to the wall or the supporting construction about midway on the run to force expansion, evenly divided, toward the ends.

Sufficient flexibility shall be provided on branch runouts from mains and risers to provide for expansion and contraction of piping. Flexibility shall be provided by installing one or more turns in the line so that piping will spring enough to allow for expansion without straining.

3.1.1.7 Thrust Restraint

Plugs, caps, tees, valves and bends deflecting 11.25 degrees or more, either vertically or horizontally, in waterlines 100 mm in diameter or larger shall be provided with thrust blocks, where indicated, to prevent movement. Thrust blocking shall be concrete of a mix not leaner than: 1 cement, 2-1/2 sand, 5 gravel; and having a compressive strength of not less than 14 MPa after 28 days. Blocking shall be placed between solid ground and the fitting to be anchored. Unless otherwise indicated or directed, the base and thrust bearing sides of the thrust block shall be poured against undisturbed earth. The side of the thrust block not subject to thrust shall be poured against forms. The area of bearing will be as shown. Blocking shall be placed so that the joints of the fitting are accessible for repair. Steel rods and clamps, protected by galvanizing or by coating with bituminous paint, shall be used to anchor vertical down bends into gravity thrust blocks.

3.1.1.8 Commercial-Type Water Hammer Arresters

Commercial-type water hammer arresters shall be provided on hot- and cold-water supplies and shall be located as generally indicated, with precise location and sizing to be in accordance with PDI WH 201. Water hammer arresters, where concealed, shall be accessible by means of access doors or removable panels. Commercial-type water hammer arresters shall conform to ASSE 1010. Vertical capped pipe columns will not be permitted.

3.1.2 Commercial-Type Water Hammer Arresters

Commercial-type water hammer arresters shall be provided on hot- and cold-water supplies and shall be located as generally indicated, with precise location and sizing to be in accordance with PDI WH 201. Water hammer arresters, where concealed, shall be accessible by means of access doors or removable panels. Commercial-type water hammer arresters shall conform to PDI WH 201. Vertical capped pipe columns will not be permitted.

3.1.3 Compressed Air Piping (Non-Oil Free)

Compressed air piping shall be installed as specified for metallic water piping and suitable for 862 kPa (125 psig) working pressure. Compressed air piping shall have supply lines and discharge terminals legibly and permanently marked at both ends with the name of the system and the direction of flow.

3.1.4 Joints

Installation of pipe and fittings shall be made in accordance with the manufacturer's recommendations. Mitering of joints for elbows and notching of straight runs of pipe for tees will not be permitted. Joints shall be made up with fittings of compatible material and made for the specific purpose intended.

3.1.4.1 Threaded

Threaded joints shall have taper pipe threads conforming to ASME B1.20.1.

Only male pipe threads shall be coated with graphite or with an approved graphite compound, or with an inert filler and oil, or shall have a polytetrafluoroethylene tape applied.

3.1.4.2 Unions and Flanges

Unions, and flanges shall not be concealed in walls, ceilings, or partitions. Unions shall be used on pipe sizes 65 mm (2-1/2 inches) and smaller; flanges shall be used on pipe sizes 80 mm (3 inches) and larger.

3.1.4.3 Plastic Pipe

PVC pipe shall have joints made with solvent cement elastomeric, threading, (threading of Schedule 80 Pipe is allowed only where required for disconnection and inspection; threading of Schedule 40 Pipe is not allowed), or mated flanged.

3.1.5 Corrosion Protection for Buried Pipe and Fittings

3.1.5.1 Steel

Steel pipe, joints, and fittings shall be cleaned, coated with primer, and wrapped with tape. Pipe shall be cleaned, coated, and wrapped prior to pipe tightness testing. Joints and fittings shall be cleaned, coated, and wrapped after pipe tightness testing. Tape shall be applied with a 50 percent overlap. Primer shall be as recommended by the tape manufacturer.

3.1.6 Pipe Sleeves and Flashing

Pipe sleeves shall be furnished and set in their proper and permanent location.

3.1.6.1 Sleeve Requirements

Pipes passing through concrete or masonry walls or concrete floors or roofs shall be provided with pipe sleeves fitted into place at the time of construction. Sleeves are not required for supply, drainage, waste and vent pipe passing through concrete slab on grade, except where penetrating a membrane waterproof floor. A modular mechanical type sealing assembly may be installed in lieu of a waterproofing clamping flange and caulking and sealing of annular space between pipe and sleeve. The seals shall consist of interlocking synthetic rubber links shaped to continuously fill the annular space between the pipe and sleeve using galvanized steel bolts, nuts, and pressure plates. The links shall be loosely assembled with bolts to form a continuous rubber belt around the pipe with a pressure plate under each bolt head and each nut. After the seal assembly is properly positioned in the sleeve, tightening of the bolt shall cause the rubber sealing elements to expand and provide a watertight seal between the pipe and the sleeve. Each seal assembly shall be sized as recommended by the manufacturer to fit the pipe and sleeve involved. Sleeves shall not be installed in structural members, except where indicated or approved. Rectangular and square openings shall be as detailed. Each sleeve shall extend through its respective floor, or roof, and shall be cut flush with each surface, except for special circumstances. Pipe sleeves passing through floors in wet areas such as mechanical equipment rooms, lavatories, kitchens, and other plumbing fixture areas shall extend a minimum of 100 mm above the finished floor. Unless otherwise indicated, sleeves shall be of a size to provide a minimum of 6 mm (1/4 inch) clearance between bare pipe or insulation and inside of sleeve or between insulation and inside of

sleeve. Sleeves in bearing walls and concrete slab on grade floors shall be steel pipe or cast-iron pipe. Sleeves in nonbearing walls or ceilings may be steel pipe, cast-iron pipe, galvanized sheet metal with lock-type longitudinal seam, or plastic. Except as otherwise specified, the annular space between pipe and sleeve, or between jacket over insulation and sleeve, shall be sealed as indicated with sealants conforming to ASTM C 920 and with a primer, backstop material and surface preparation as specified in Section 07900 JOINT SEALING. The annular space between pipe and sleeve,between bare insulation and sleeve or between jacket over insulation and sleeve shall not be sealed for interior walls which are not designated as fire rated. Sleeves through below-grade walls in contact with earth shall be recessed 12 mm (1/2 inch) from wall surfaces on both sides. Annular space between pipe and sleeve shall be filled with backing material and sealants in the joint between the pipe and masonry wall as specified above. Sealant selected for the earth side of the wall shall be compatible with dampproofing/waterproofing materials that are to be applied over the joint sealant.

3.1.6.2 Flashing Requirements

Pipes passing through roof shall be installed through a 4.9 kg per square meter (16 ounce) copper flashing, each within an integral skirt or flange. Flashing shall be suitably formed, and the skirt or flange shall extend not less than 200 mm from the pipe and shall be set over the roof or floor membrane in a solid coating of bituminous cement. The flashing shall extend up the pipe a minimum of 250 mm. For cleanouts, the flashing shall be turned down into the hub and caulked after placing the ferrule. Pipes passing through pitched roofs shall be flashed, using lead or copper flashing, with an adjustable integral flange of adequate size to extend not less than 200 mm from the pipe in all directions and lapped into the roofing to provide a watertight seal. The annular space between the flashing and the bare pipe or between the flashing and the metal-jacket-covered insulation shall be sealed as indicated. Flashing for dry vents shall be turned down into the pipe to form a waterproof joint. Pipes, up to and including 250 mm (10 inches) in diameter, passing through roof or floor waterproofing membrane may be installed through a cast-iron sleeve with caulking recess, anchor lugs, flashing-clamp device, and pressure ring with brass bolts. Flashing shield shall be fitted into t sleeve clamping device. Pipes passing through wall waterproofing membrane shall be sleeved as described above. A waterproofing clamping flange shall be installed.

3.1.6.3 Waterproofing

Waterproofing at floor-mounted water closets shall be accomplished by forming a flashing guard from soft-tempered sheet copper. The center of the sheet shall be perforated and turned down approximately 40 mm to fit between the outside diameter of the drainpipe and the inside diameter of the cast-iron or steel pipe sleeve. The turned-down portion of the flashing guard shall be embedded in sealant to a depth of approximately 40 mm; then the sealant shall be finished off flush to floor level between the flashing guard and drainpipe. The flashing guard of sheet copper shall extend not less than 200 mm from the drainpipe and shall be lapped between the floor membrane in a solid coating of bituminous cement.

3.1.6.4 Optional Counterflashing

Instead of turning the flashing down into a dry vent pipe, or caulking and sealing the annular space between the pipe and flashing or

metal-jacket-covered insulation and flashing, counterflashing may be accomplished by utilizing the following:

a. A standard roof coupling for threaded pipe up to 150 mm (6 inches) in diameter.

b. A tack-welded or banded-metal rain shield around the pipe.

3.1.6.5 Pipe Penetrations of Slab on Grade Floors

Where pipes, fixture drains, floor drains, cleanouts or similar items penetrate slab on grade floors, except at penetrations of floors with waterproofing membrane as specified in paragraphs Flashing Requirements and Waterproofing, a groove 6 to 13 mm wide by 6 to 10 mm deep shall be formed around the pipe, fitting or drain. The groove shall be filled with a sealant as specified in Section 07900 JOINT SEALING.

3.1.7 Supports

3.1.7.1 General

Hangers used to support piping 50 mm (2 inches) and larger shall be fabricated to permit adequate adjustment after erection while still supporting the load. Pipe guides and anchors shall be installed to keep pipes in accurate alignment, to direct the expansion movement, and to prevent buckling, swaying, and undue strain. Piping subjected to vertical movement when operating temperatures exceed ambient temperatures shall be supported by variable spring hangers and supports or by constant support hangers. In the support of multiple pipe runs on a common base member, a clip or clamp shall be used where each pipe crosses the base support member. Spacing of the base support members shall not exceed the hanger and support spacing required for an individual pipe in the multiple pipe run. Threaded sections of rods shall not be formed or bent.

3.1.7.2 Pipe Supports and Structural Bracing, Seismic Requirements

Structural steel required for reinforcement to properly support piping, headers, and equipment, but not shown, shall be provided.

3.1.7.3 Pipe Hangers, Inserts, and Supports

Installation of pipe hangers, inserts and supports shall conform to MSS SP-58 and MSS SP-69, except as modified herein.

a. Inserts shall be secured to concrete forms before concrete is placed. Continuous inserts which allow more adjustment may be used.

b. C-clamps shall be torqued per MSS SP-69 and shall have both locknuts and retaining devices furnished by the manufacturer. Field-fabricated C-clamp bodies or retaining devices are not acceptable.

c. Attachments used on angles and channels shall be furnished with an added malleable-iron heel plate or adapter.

d. Saddles shall be used on insulated pipe 100 mm and larger when the temperature of the medium is 15 degrees C or higher. Saddles shall be welded to the pipe.

e. Shields shall:

(1) Be used on insulated pipe less than 100 mm.
(2) Be used on insulated pipe 100 mm and larger when the temperature of the medium is 15 degrees C or less.
(3) Have a high density insert for all pipe sizes. High density inserts shall have a density of 128 kg per cubic meter (8 pcf)or greater.

f. Horizontal pipe supports shall be spaced as specified in MSS SP-69 and a support shall be installed not over 300 mm from the pipe fitting joint at each change in direction of the piping. Pipe supports shall be spaced not over 1.5 m apart at valves. Operating temperatures in determining hanger spacing for PVC pipe shall be 49 degrees C. Horizontal pipe runs shall include allowances for expansion and contraction.

g. Vertical pipe shall be supported at each floor, except at slab-on-grade, at intervals of not more than 4.5 m nor more than 2 m from end of risers, and at vent terminations. Vertical pipe risers shall include allowances for expansion and contraction.

h. Guides using steel, reinforced polytetrafluoroethylene (PTFE) or graphite slides shall be provided to allow longitudinal pipe movement. Slide materials shall be suitable for the system operating temperatures, atmospheric conditions, and bearing loads encountered. Lateral restraints shall be provided as needed. Where steel slides do not require provisions for lateral restraint the following may be used:

(1) On pipe 100 mm and larger when the temperature of the medium is 15 degrees C or higher, a saddle, welded to the pipe, may freely rest on a steel plate.

(2) On pipe less than 100 mm a shield, attached to the pipe or insulation, may freely rest on a steel plate.

(3) On pipe 100 mm and larger carrying medium less that 15 degrees C a shield, attached to the pipe or insulation, may freely rest on a steel plate.

i. Pipe hangers on horizontal insulated pipe shall be the size of the outside diameter of the insulation. The insulation shall be continuous through the hanger on all pipe sizes and applications.

j. Where there are high system temperatures and welding to piping is not desirable, the guide shall include a pipe cradle, welded to the guide structure and strapped securely to the pipe. The pipe shall be separated from the slide material by at least 100 mm or by an amount adequate for the insulation, whichever is greater.

k. Hangers and supports for plastic pipe shall not compress, distort, cut or abrade the piping, and shall allow free movement of pipe except where otherwise required in the control of expansion/contraction.

3.1.8 Pipe Cleanouts

Pipe cleanouts shall be the same size as the pipe except that cleanout plugs larger than 100 mm (4 inches) will not be required. Cleanouts in connection with pipe, where indicated, shall be T-pattern, 90-degree branch drainage fittings with plastic plugs . Plugs shall be the same size as the pipe up to and including 100 mm (4 inches). Cleanout tee branches with screw plug shall be installed at the foot of soil and waste stacks, at the foot of interior downspouts, on each connection to building storm drain where interior downspouts are indicated, and on each building drain outside the building. Cleanout tee branches may be omitted on stacks in single story buildings with slab-on-grade construction or where less than 450 mm of crawl space is provided under the floor. Cleanouts on pipe concealed in partitions shall be provided with chromium plated bronze, nickel bronze, nickel brass or stainless steel flush type access cover plates. Round access covers shall be provided and secured to plugs with securing screw. Square access covers may be provided with matching frames, anchoring lugs and cover screws. Cleanouts in finished walls shall have access covers and frames installed flush with the finished wall. Cleanouts installed in finished floors subject to foot traffic shall be provided with a chrome-plated cast brass, nickel brass, or nickel bronze cover secured to the plug or cover frame and set flush with the finished floor. Heads of fastening screws shall not project above the cover surface. Where cleanouts are provided with adjustable heads, the heads shall be plastic.

Basis of Design: Mast; Model CO-50; Smith 4051 series; Zurn or equivalent.

3.2 FIXTURE TRIMMINGS

3.2.1 Access Panels

Access panels shall be provided for concealed valves and controls, or any item requiring inspection or maintenance. Access panels shall be of sufficient size and located so that the concealed items may be serviced, maintained, or replaced.

3.2.2 Sight Drains

Sight drains shall be installed so that the indirect waste will terminate 50 mm above the flood rim of the funnel to provide an acceptable air gap.

3.2.3 Traps

Each trap shall be placed as near the fixture as possible, and no fixture shall be double-trapped. Traps installed on steel pipe shall be recess-drainage pattern, or brass-tube type. Traps installed on plastic pipe may be plastic.

3.3 IDENTIFICATION SYSTEMS

3.3.1 Identification Tags

Identification tags made of brass, engraved laminated plastic, or engraved anodized aluminum, indicating service and valve number shall be installed on valves, except those valves installed on supplies at plumbing fixtures. Tags shall be 35 mm (1-3/8 inch) minimum diameter, and marking shall be stamped or engraved. Indentations shall be black, for reading clarity. Tags shall be attached to valves with 4 sq. mm, copper wire, chrome-plated beaded chain, or plastic straps designed for that purpose.

3.4 ESCUTCHEONS

Escutcheons shall be provided at finished surfaces where bare or insulated piping, exposed to view, passes through floors, walls, or ceilings, except in boiler, utility, or equipment rooms. Escutcheons shall be fastened securely to pipe or pipe covering and shall be satin-finish, corrosion-resisting steel, polished chromium-plated zinc alloy, or polished chromium-plated copper alloy. Escutcheons shall be either one-piece or split-pattern, held in place by internal spring tension or setscrew.

3.5 PAINTING

Painting of pipes, hangers, supports, and other iron work, either in concealed spaces or exposed spaces, is specified in Section 09900 PAINTS AND COATINGS.

3.6 TESTS, FLUSHING AND DISINFECTION

3.6.1 Plumbing System

The following tests shall be performed on the plumbing system in accordance with ICC International Plumbing Code.

3.6.1.1 Test of Backflow Prevention Assemblies

Backflow prevention assembly shall be tested using gauges specifically designed for the testing of backflow prevention assemblies. Gauges shall be tested annually for accuracy in accordance with ICC International Plumbing Code requirements and ASTM standards. Report form for each assembly shall include, as a minimum, the following:

Data on Device	Data on Testing Firm
Type of Assembly	Name
Manufacturer	Address
Model Number	Certified Tester
Serial Number	Certified Tester No.
Size	Date of Test
Location	
Test Pressure Readings	Serial Number and Test Data of Gauges

If the unit fails to meet specified requirements, the unit shall be repaired and retested.

3.6.1.2 Compressed Air Piping (Nonoil-Free)

Piping systems shall be filled with oil-free dry air or gaseous nitrogen to 1.03 MPa and hold this pressure for 2 hours with no drop in pressure.

3.6.2 Defective Work

If inspection or test shows defects, such defective work or material shall be replaced or repaired as necessary and inspection and tests shall be repeated. Repairs to piping shall be made with new materials. Caulking of screwed joints or holes will not be acceptable.

3.6.3 Operational Test

Upon completion of flushing and prior to disinfection procedures, the Contractor shall subject the plumbing system to operating tests to demonstrate satisfactory functional and operational efficiency. Such operating tests shall cover a period of not less than 8 hours for each system and shall include the following information in a report with conclusion as to the adequacy of the system:

a. Time, date, and duration of test.
b. Water pressures at the most remote and the highest fixtures.
c. Operation of each floor drain by flooding with water.
d. Compressed air readings at each compressor and at each outlet. Each indicating instrument shall be read at 1/2 hour intervals. The report of the test shall be submitted in quadruplicate. The Contractor shall furnish instruments, equipment, and personnel required for the tests; the Government will furnish the necessary water and electricity.

3.7 WATER HEATERS AND HOT WATER STORAGE TANKS

Electric water heater shall have capacity as indiecated on Drawings, safety relief valve, thermal sensing element, magnesium anode and will be enamel coated.

3.7.1 Relief Valves

No valves shall be installed between a relief valve and its water heater or storage tank. The P&T relief valve shall be installed where the valve actuator comes in contact with the hottest water in the heater. Whenever possible, the relief valve shall be installed directly in a tapping in the tank or heater; otherwise, the P&T valve shall be installed in the hot-water outlet piping. A vacuum relief valve shall be provided on the cold water supply line to the hot-water storage tank or water heater and mounted above and within 150 mm above the top of the tank or water heater.

3.7.2 Heat Traps

Piping to and from each water heater and hot water storage tank shall be routed horizontally and downward a minimum of 600 mm before turning in an upward direction.

3.7.3 Connections to Water Heaters

Connections of metallic pipe to water heaters shall be made with dielectric unions or flanges.

3.8 FIXTURES AND FIXTURE TRIMMINGS

Polished chromium-plated pipe, valves, and fittings shall be provided where exposed to view. Angle stops, straight stops, stops integral with the faucets, or concealed type of lock-shield, and loose-key pattern stops for supplies with threaded, sweat or solvent weld inlets shall be furnished and installed with fixtures. Where connections between copper tubing and faucets are made by rubber compression fittings, a beading tool shall be used to mechanically deform the tubing above the compression fitting. Exposed traps and supply pipes for fixtures and equipment shall be connected to the rough piping systems at the wall, unless otherwise specified under the item. Floor and wall escutcheons shall be as

specified. Drain lines and hot water lines of fixtures for handicapped personnel shall be insulated and do not require polished chrome finish. Plumbing fixtures and accessories shall be installed within the space shown.

3.8.1 Fixture Connections

Where space limitations prohibit standard fittings in conjunction with the cast-iron floor flange, special short-radius fittings shall be provided. Connections between earthenware fixtures and flanges on soil pipe shall be made gastight and watertight with a closet-setting compound or neoprene gasket and seal. Use of natural rubber gaskets or putty will not be permitted. Fixtures with outlet flanges shall be set the proper distance from floor or wall to make a first-class joint with the closet-setting compound or gasket and fixture used.

3.8.2 Height of Fixture Rims Above Floor

Lavatories shall be mounted with rim 775 mm above finished floor. Wall-hung drinking fountains and water coolers shall be installed with rim 1020 mm above floor. Wall-hung service sinks shall be mounted with rim 700 mm above the floor.

3.8.3 Fixture Supports

Fixture supports for off-the-floor lavatories, urinals, and other fixtures of similar size, design, and use, shall be of the chair-carrier type. The carrier shall provide the necessary means of mounting the fixture, with a foot or feet to anchor the assembly to the floor slab. Adjustability shall be provided to locate the fixture at the desired height and in proper relation to the wall. Support plates, in lieu of chair carrier, shall be fastened to the wall structure only where it is not possible to anchor a floor-mounted chair carrier to the floor slab.

3.8.3.1 Support for Solid Masonry Construction

Chair carrier shall be anchored to the floor slab. Where a floor-anchored chair carrier cannot be used, a suitable wall plate shall be imbedded in the masonry wall.

3.8.3.2 Support for Concrete-Masonry Wall Construction

Chair carrier shall be anchored to floor slab. Where a floor-anchored chair carrier cannot be used, a suitable wall plate shall be fastened to the concrete wall using through bolts and a back-up plate.

3.8.4 Backflow Prevention Devices

Plumbing fixtures, equipment, and pipe connections shall not cross connect or interconnect between a potable water supply and any source of nonpotable water. Backflow preventers shall be installed where indicated and in accordance with ICC Intl Plumbing Code at all other locations necessary to preclude a cross-connect or interconnect between a potable water supply and any nonpotable substance. In addition backflow preventers shall be installed at all locations where the potable water outlet is below the flood level of the equipment, or where the potable water outlet will be located below the level of the nonpotable substance. Backflow preventers shall be located so that no part of the device will be submerged. Backflow preventers shall be of sufficient size to allow unrestricted flow of water to the equipment, and preclude the backflow of any nonpotable substance

into the potable water system. Bypass piping shall not be provided around backflow preventers. Access shall be provided for maintenance and testing. Each device shall be a standard commercial unit.

3.8.5 Access Panels

Access panels shall be provided for concealed valves and controls, or any item requiring inspection or maintenance. Access panels shall be of sufficient size and located so that the concealed items may be serviced, maintained, or replaced.

3.8.6 Sight Drains

Sight drains shall be installed so that the indirect waste will terminate 50 mm above the flood rim of the funnel to provide an acceptable air gap.

3.8.7 Traps

Each trap shall be placed as near the fixture as possible, and no fixture shall be double-trapped. Traps installed on steel pipe shall be recess-drainage pattern, or brass-tube type. Traps installed on plastic pipe may be plastic.

3.9 IDENTIFICATION SYSTEMS

3.9.1 Identification Tags

Identification tags made of brass, engraved laminated plastic, or engraved anodized aluminum, indicating service and valve number shall be installed on valves, except those valves installed on supplies at plumbing fixtures. Tags shall be 35 mm (1-3/8 inch) minimum diameter, and marking shall be stamped or engraved. Indentations shall be black, for reading clarity. Tags shall be attached to valves with 4 sq. mm, copper wire, chrome-plated beaded chain, or plastic straps designed for that purpose.

3.10 ESCUTCHEONS

Escutcheons shall be provided at finished surfaces where bare or insulated piping, exposed to view, passes through floors, walls, or ceilings, except in boiler, utility, or equipment rooms. Escutcheons shall be fastened securely to pipe or pipe covering and shall be satin-finish, corrosion-resisting steel, polished chromium-plated zinc alloy, or polished chromium-plated copper alloy. Escutcheons shall be either one-piece or split-pattern, held in place by internal spring tension or setscrew.

3.11 PAINTING

Painting of pipes, hangers, supports, and other iron work, either in concealed spaces or exposed spaces, is specified in Section 09900 PAINTS AND COATINGS.

3.12 TESTS, FLUSHING AND DISINFECTION

3.12.1 Plumbing System

The following tests shall be performed on the plumbing system in accordance with ICC Intl Plumbing Code.

3.12.1.1 Test of Backflow Prevention Assemblies

Backflow prevention assembly shall be tested using gauges specifically designed for the testing of backflow prevention assemblies. Gauges shall be tested annually for accuracy in accordance with ICC Intl Plumbing Code requirements and ASTM standards. Report form for each assembly shall include, as a minimum, the following:

Data on Device	Data on Testing Firm
Type of Assembly	Name
Manufacturer	Address
Model Number	Certified Tester
Serial Number	Certified Tester No.
Size	Date of Test
Location	
Test Pressure Readings	Serial Number and Test Data of Gauges

If the unit fails to meet specified requirements, the unit shall be repaired and retested.

3.12.2 Defective Work

If inspection or test shows defects, such defective work or material shall be replaced or repaired as necessary and inspection and tests shall be repeated. Repairs to piping shall be made with new materials. Caulking of screwed joints or holes will not be acceptable.

3.12.3 System Flushing

3.12.3.1 During Flushing

Before operational tests or disinfection, potable water piping system shall be flushed with potable water. Sufficient water shall be used to produce a water velocity that is capable of entraining and removing debris in all portions of the piping system. This requires simultaneous operation of all fixtures on a common branch or main in order to produce a flushing velocity of approximately 1.2 meters per second (4 fps) through all portions of the piping system. In the event that this is impossible due to size of system, the Government (or the designated representative) shall specify the number of fixtures to be operated during flushing. Contractor shall provide adequate personnel to monitor the flushing operation and to ensure that drain lines are unobstructed in order to prevent flooding of the facility. Contractor shall be responsible for any flood damage resulting from flushing of the system. Flushing shall be continued until entrained dirt and other foreign materials have been removed and until discharge water shows no discoloration. All faucets and drinking water fountains, to include any device considered as an end point device shall be flushed a minimum of 1 L per 24 hour period, ten times over a 14 day period.

3.12.3.2 After Flushing

System shall be drained at low points. Strainer screens shall be removed, cleaned, and replaced. After flushing and cleaning, systems shall be prepared for testing by immediately filling water piping with clean, fresh potable water. Any stoppage, discoloration, or other damage to the finish, furnishings, or parts of the building due to the Contractor's failure to properly clean the piping system shall be repaired by the Contractor. When the system flushing is complete, the hot-water system shall be adjusted for

uniform circulation. Flushing devices and automatic control systems shall be adjusted for proper operation. The water supply to the building shall be tested separately to ensure that any lead contamination found during potable water system testing is due to work being performed inside the building.

3.12.4 Operational Test

Upon completion of flushing and prior to disinfection procedures, the Contractor shall subject the plumbing system to operating tests to demonstrate satisfactory functional and operational efficiency. Such operating tests shall cover a period of not less than 8 hours for each system and shall include the following information in a report with conclusion as to the adequacy of the system:

a. Time, date, and duration of test.

b. Water pressures at the most remote and the highest fixtures.

c. Operation of each fixture and fixture trim.

d. Operation of each valve, hydrant, and faucet.

f. Temperature of each domestic hot-water supply.

g. Operation of each floor and roof drain by flooding with water.

h. Operation of each vacuum breaker and backflow preventer.

i. Complete operation of each water pressure booster system, including pump start pressure and stop pressure.

j. Compressed air readings at each compressor and at each outlet. Each indicating instrument shall be read at 1/2 hour intervals. The report of the test shall be submitted in quadruplicate. The Contractor shall furnish instruments, equipment, and personnel required for the tests; the Government will furnish the necessary water and electricity.

3.12.5 Disinfection

After operational tests are complete, the entire domestic hot- and cold-water distribution system shall be disinfected. System shall be flushed as specified, before introducing chlorinating material. The chlorinating material shall be hypochlorites or liquid chlorine. Water chlorination procedure shall be in accordance with AWWA M20. The chlorinating material shall be fed into the water piping system at a constant rate at a concentration of at least 50 parts per million (ppm). A properly adjusted hypochlorite solution injected into the main with a hypochlorinator, or liquid chlorine injected into the main through a solution-feed chlorinator , shall be used. The chlorine residual shall be checked at intervals to ensure that the proper level is maintained. Chlorine application shall continue until the entire main is filled. The water shall remain in the system for a minimum of 24 hours. Each valve in the system being disinfected shall be opened and closed several times during the contact period to ensure its proper disinfection. Following the 24-hour period, no less than 25 ppm chlorine residual shall remain in the system. Water tanks shall be disinfected by the addition of chlorine directly to the filling water. Following a 6 hour period, no less than 50

ppm chlorine residual shall remain in the tank. If after the 24 hour and 6 hour holding periods, the residual solution contains less than 25 ppm and 50 ppm chlorine respectively, flush the piping and tank with potable water, and repeat the above procedures until the required residual chlorine levels are satisfied. The system including the tanks shall then be flushed with clean water until the residual chlorine level is reduced to less than one part per million. During the flushing period each valve and faucet shall be opened and closed several times. Samples of water in disinfected containers shall be obtained from several locations selected by the Government. The samples of water shall be tested for total coliform organisms (coliform bacteria, fecal coliform, streptococcal, and other bacteria) in accordance with AWWA EWW. The testing method used shall be either the multiple-tube fermentation technique or the membrane-filter technique. Disinfection shall be repeated until tests indicate the absence of coliform organisms (zero mean coliform density per 100 milliliters) in the samples for at least 2 full days. The system will not be accepted until satisfactory bacteriological results have been obtained.

3.13 PLUMBING FIXTURE SCHEDULE

P-1 EASTERN WATER CLOSET:

Eastern style toilets shall be constructed of enameled cast iron, vitreous china, or porcelain. Toilet shall be capable of flushing from tank with a minimum of 6.0 liters of water. Toilet shall be recessed, floor-mounted, and designed to mount flush with the finished floor. The exposed portion of the toilet shall be generally rectangular in shape. Channels placed in foot pads to provide skid proofing shall allow positive drainage into the bowl. All toilet rooms shall be designed with toilet fixtures facing north/south away from Mecca.

Toilet shall be completely self-supporting, not requiring any external supports other than the floor and shall include necessary appurtenances to provide gasket-type water-tight sealing of the floor waterproofing membrane against the toilet base. Water supply connections shall be made above the floor waterproofing membrane and shall be of the back orientation as detailed on the drawings. Waste connection shall be minimum 75 mm. Trap may be built-in or separate rotatable, "P" trap. All eastern water closets shall be provided with a wall mounted faucet and spray hose.

P-1A WESTERN WATER CLOSET:

Elongated bowl with flush tank, supply spud, floor mounted.

Seat - white plastic.

Flush Tank - An adequate quantity of water shall be provided to flush and clean the fixture served. The water supply to flush tanks equipped for manual flushing shall be controlled by a float valve or other automatic device designed to refill the tank after each discharge, and to completely shut off the water flow to the tank when the tank is filled to operational capacity.

P-2 FLUSH VALVE URINALS

White vitreous china, wall-mounted, wall outlet,
siphon jet, integral trap, and extended side shields. Provide urinal with the rim 610 mm above the floor. Water flushing volume of the urinal and flush valve combination shall not exceed 3.8 liters per flush. Provide ASME

A112.6.1M concealed chair carriers with vertical steel pipe supports. Provide large diameter flush valve including angle control-stop valve, vacuum breaker, tail pieces, slip nuts, and wall plates; exposed to view components shall be chromium-plated or polished stainless steel. Flush valves shall be nonhold-open type. Mount flush valves not less than 279 mm 11 inches above the fixture.

P-3 LAVATORY (WALL HUNG):

Manufacturer's standard sink depth, enameled cast iron or vitreous china.

Faucet - Faucets shall be single control, mixing type. Faucets shall have replaceable seats and washers. Connection between valve and spout for center-set faucet shall be of rigid metal tubing.
Drain - Pop-up drain shall include stopper, lift rods, jam nut, washer, and tail piece.

P-3A MULTI-FAUCET SINK:

Multi-faucet sink shall be 1.8 m wide trough type constructed of poured in-place concrete or filled concrete block with ceramic tile exterior and stainless steel lining capable of withstanding abuse. Maximum width is 1.8 m individual troughs shall serve only three (3) individuals with three (3) spigots with hot and cold water and two drains.

Faucet - Faucets shall be single control, mixing type. Faucets shall have replaceable seats and washers. Valves and handles shall be copper alloy. Connection between valve and spout for center-set faucet shall be of rigid metal tubing. Provide manual mixing with hot and cold water valves. See Architectural drawings for quantities.

Drain - Pipe size as indicated on Drawings.

P-3B LAVATORY (COUNTED MOUNTED:

Manufacturer's standard sink depth, enameled cast iron or vitreous china.

Faucet - Faucets shall be single control, mixing type, counter mounted. Faucets shall have replaceable seats and washers. Connection between valve and spout for center-set faucet shall be of rigid metal tubing.
Drain - Pop-up drain shall include stopper, lift rods, jam nut, washer, and tail piece.

P-4 JANITOR'S SINK:

Floor mount janitor, enameled cast iron with copper alloy rim guard sink or built up Janitor sink. Provide hot and cold water valves with manual mixing.

Provide Janitor's sink in all large Administration and Support buildings like Community Center, Garrison and Brigade Headquarters.

P-5 SHOWER: Shower heads, other than emergency showers, shall be nonadjustable spray type.

Wall Mounted: Shower head shall be nonadjustable spray, stainless steel or chromium plated brass with ball joint. Handles shall be manufacturer's option. Control valves shall be copper alloy , nickel alloy, or stainless steel. Valves shall be mechanical mixing, with spearate hot and cold

water. Shower head shall be vandalproof with integral back. Each shower compartment shall be additionally furnished with a flexible 1.5 m spray hose, with hanger, attached to a hose faucet mounted below the control valve. The shower head and the spray hose shall each have a valve so flow can be diverted to either outlet.

P-7 EMERGENCY SHOWER AND EYE WASH ASSEMBLY: ISEA Z358.1, floor supported free standing unit. Provide deluge shower head, stay-open ball valve operated by pull rod and ring or traingular handle. Provide eyewash and stay-open ball valve operated by foot treadle or push handle.

P-8 SERVICE SINK:

Enameled cast iron, copper alloy or stainless steel corner, floor mounted, or built-up service sink, size as indicated on Drawings or approved by Government. Service sinks provided in battery rooms shall be acid resistant.

Faucet and Spout - Cast or wrought copper alloy, with top or bottom brace. Faucets shall have replaceable seat and the washer shall rotate onto the seat. Handles shall be lever type. Strainers shall have internal threads.

P-9 KITCHEN SINK:

Ledge back with hole for faucet and spout single bowl, size as indicated on Drawings, stainless steel.

Faucet and Spout - Faucets shall be cast or wrought copper alloy.

Handles - Cast copper alloy, wrought copper alloy, or stainless steel.

Drain Assembly - Plug, cup strainer, crossbars, jam nuts, washers, couplings, stopper, etc., shall be copper alloy or stainless steel.

P-10 ABLUTION TRENCH, MIXING VALVE:

See architectural plan for size and construction of trench and number of stations. Provide trench drain with grating. Provide each station with hot and cold water valves with backflow preventer on the outlet and with a flexible 1.5 m spray hose mounted below the control valves and provided with a hanger. Faucet handles shall be copper alloy.

P-11 GREASE INTERCEPTOR:

Steel construction, manual cleaning type with removable checker-plate cover, complete with flow control valve. Tested and rated in accorordance with PDI G-101. Concrete shall have 21 MPa(3045 psi) minimum compressive strength in 28 days. See Paragraph GREASE INTERCEPTORS.

All wastewater collected from fixtures in the food Preparation area of the Community Center shall be routed through a grease interceptor.

P-13 FLOOR SINK:

Circular or square, with 300 mm overall width or diameter and 250 nominal overall depth. Acid resistant enamel interior with cast iron body, aluminum sediment bucket and perforated grate of cast iron. Outlet size as indicated on plans.

P-14 DRINKING WATER FOUNTAINS:

Drinking fountains shall meet the requirements of DIN, BS, or EN standards. Non-refrigerated with corrosion resistant bowl with brass fittings and faucets. Bubbler drinking fountains shall have self-closing valves. Self-closing valves shall have automatic stream regulators, flow control capability, a push button actuation or a cross-shaped index metal turn handle without a hood. Spouts shall provide a flow of water at least 100 mm (4 inches) high so as to allow the insertion of a cup or glass under the flow of water. Stops, stream regulators, flow controls, pushbuttons, handles, and traps shall be made of copper zinc alloy. Strainers and drains shall be made of copper zinc alloy or stainless steel.

Surface Wall-Mounted - Surface wall-mounted units size shall be as indicated on the drawings. The bowl shall be made of corrosion-resisting steel. The unit shall have concealed fasteners and be for interior installation.

Provide water fountains where indicated in drawings.

P-15 BATHTUB:

Recessed bathtub, 1.524 m in length, manufacturer's standard width and depth, enameled cast iron.

Drain Assembly - Plug, cup strainer, overflow assembly, washers, couplings, pop-up lever, trip lever, stopper, fittings, etc., shall be brass, cast copper alloy, or wrought copper alloy. See paragraph FIXTURES for optional plastic accessories.

P-16 BREAKROOM SINK:

Stainless steel, splashback, double compartment.

Faucet and Spout - Wall mounted, cast or wrought copper alloy. Faucets shall have replaceable seat and the washer shall rotate onto the seat. Combination faucets with two valves and spouts shall be provided.

Handles - Cast copper alloy, wrought copper alloy, or stainless steel.

P-17 HANDWASH SINK:

Ledge back with holes for faucet and spout single bowl, stainless steel.

Faucet and Spout - Faucets shall be cast or wrought copper alloy.

Handle - Cast copper alloy, wrought copper alloy, or stainless steel. Single lever type.

P-18 KITCHEN PREP SINK:

Stainless steel single compartment.

Faucet and Spout - Wall mounted, cast or wrought copper alloy. Faucets shall have replaceable seat and the washer shall rotate onto the seat. Combination faucets with two valves and spouts shall be provided.

Handles - Cast copper alloy, wrought copper alloy, or stainless steel.

P-19 SCULLERY SINK:

Stainless steel, splashback, double compartment.

Faucet and Spout - Cast or wrought copper alloy. Faucets shall have replaceable seat and the washer shall rotate onto the seat. Combination faucets with two valves and spouts shall be provided. Faucel shall have hose assembly, and movable head.

Handles - Cast copper alloy, wrought copper alloy, or stainless steel, Single lever Control.

P-20 SCULLERY SINK:

Stainless steel, splashback, triple compartment. Drains shall have quick opening valve.

Faucet and Spout - Cast or wrought copper alloy. Faucets shall have replaceable seat and the washer shall rotate onto the seat. Combination faucets with two valves and spouts shall be provided. Faucet shall have hose assembly and movable head.

Handles - Cast copper alloy, wrought copper alloy, or stainless steel, Single lever control.

Drain Assembly - Plug, cup strainer, crossbars, jam nuts, washers, couplings, stopper, etc., shall be copper alloy or stainless steel.

P-21 POT WASH:

Pressure water spray hose for pot washing station.

Faucet and Spout - High Density chrome coated. Faucets shall have replaceable seat and the washer shall rotate onto the seat. Hose for water delivery shall be high pressure and high temperature resistant. Showerhead type nozzle shall have continuous water flow and water volume control.

Handles - Cast copper alloy, wrought copper alloy, or stainless steel.

3.14 PERFORMANCE OF WATER HEATING EQUIPMENT

Standard rating condition terms are as follows:

EF = Energy factor, overall efficiency.

SL = Standby loss in W/0.093 sq. m. based on 27 degrees C delta T, or in percent per hour based on nominal 38 degrees C delta T.

3.14.1 Storage Water Heaters

3.14.1.1 Electric

a. Storage capacity of 454 liters or less, and input rating of 12 kW or less: minimum energy factor (EF) shall be 0.95-0.00132V per 10 CFR 430.

b. Storage capacity of more than 454 liters or input rating more than 12 kW: maximum SL shall be 1.9 w/0.093 sq. m. per ASHRAE 90.1.

3.15 TABLES

TABLE I
PIPE AND FITTING MATERIALS FOR
DRAINAGE, WASTE, AND VENT PIPING SYSTEMS

		SERVICE					
Item #	Pipe and Fitting Materials	A	B	C	D	E	F
20	Polyvinyl Chloride plastic drain, waste and vent pipe and fittings, ASTM D 2665,DIN 8061, DIN 8062, DIN 8063 standards ASTM F 891, (Sch 40) ASTM F 1760 Basis of Design: Pipe by Nepro Plastics, Fittings by Nibco, Charlotte Pipe and Foundry Company, or Nepro Plastics.	X	X	X	X	X	X

SERVICE:
A - Underground Building Soil, Waste and Storm Drain
B - Aboveground Soil, Waste, Drain In Buildings
C - Underground Vent
D - Aboveground Vent
E - Interior Rainwater Conductors Aboveground
F - Corrosive Waste And Vent Above And Belowground
For all listed ASTM standard references, compliance with DIN 8061 or DIN 8062, standard is acceptable.

TABLE II
PIPE AND FITTING MATERIALS FOR PRESSURE PIPING SYSTEMS

Item No.	Pipe and Fitting Materials	SERVICE A	B	C	D
4	Steel pipe: a. Galvanized, ASTM A 53/A 53M, Type S or E, Grade B	X	X		X
	b. Seamless, black, ASTM A 53/A 53M, Type S, Grade B			X	
19	Chlorinated polyvinyl chloride (CPVC) plastic hot and cold water distribution system, ASTM D 2846/D 2846M	X	X		X
20	Chlorinated polyvinyl chloride (CPVC) plastic pipe, Schedule 40 and 80, ASTM F 441/F 441M	X	X		X
23	Socket-type chlorinated polyvinyl chloride (CPVC) plastic pipe fittings, Schedule 40, ASTM F 438 for use with Item 20	X	X		X
25	Polyvinyl chloride (PVC) plastic pipe, Schedules 40, 80, and 120, ASTM D 1785, DIN 8061 or DIN 8062 (16 bars) Basis of Design: Misr Elhegaz Co.	X			X
26	Polyvinyl chloride (PVC) pressure-rated pipe (SDR Series), ASTM D 2241 DIN 8061 or DIN 8062 (16 bars)	X			X
27	Polyvinyl chloride (PVC) plastic pipe fittings, Schedule 40, ASTM D 2466 or DIN 8061 or DIN 8062 (16 bars)	X			X
28	Socket-type polyvinyl chloride (PVC) plastic pipe fittings, schedule 80, ASTM D 2467 for use with Items 26 and 27	X			X
29	Threaded polyvinyl chloride (PVC) plastic pipe fittings, schedule 80, ASTM D 2464	X			X
30	Joints for IPS PVC pipe using solvent cement, ASTM D 2672	X			X
34	Carbon steel pipe unions,	X	X		X

TABLE II
PIPE AND FITTING MATERIALS FOR PRESSURE PIPING SYSTEMS

		SERVICE			
Item No.	Pipe and Fitting Materials	A	B	C	D
	socket-welding and threaded, MSS SP-83				
36	Nipples, pipe threaded ASTM A 733	X	X	X	

A - Cold Water Aboveground
B - Hot Water 82 degree C Maximum Aboveground
C - Compressed Air Lubricated
D - Cold Water Service Belowground
Indicated types are minimum wall thicknesses.
Basis of Design: CPVC & PVC Pipe by Nepro Plastics, CPVC & PVC Fittings by Nibco or Nepro Plastics.
Galvanized Steel pipe by Nova Hut, a.s.
Galvanized steel fittings by Anvil International, Inc.or M.E.G.A.
For all listed ASTM standard references, compliance with DIN 8061or DIN 8062standard is acceptable

-- End of Section --

SECTION 15690

EVAPORATIVE COOLING SYSTEMS

PART 1 GENERAL

1.1 REFERENCES

The publications listed below form a part of this specification to the extent referenced. The publications are referred to within the text by the basic designation only.

AIR MOVEMENT AND CONTROL ASSOCIATION INTERNATIONAL(AMCA)

AMCA 210	(1999) Laboratory Methods of Testing Fans for Aerodynamic Performance Rating

AMERICAN BEARING MANUFACTURERS ASSOCIATION (ABMA)

ABMA 11	(1990; R 1999) Load Ratings and Fatigue Life for Roller Bearings
ABMA 9	(1990; R 2000) Load Ratings and Fatigue Life for Ball Bearings

ASTM INTERNATIONAL (ASTM)

ASTM A 1011/A 1011M	(2006b) Steel, Sheet and Strip, Hot-Rolled, Carbon, Structural, High-Strength Low-Alloy and High-Strength Low-Alloy With Improved Formability, and Ultra-High Strength
ASTM A 123/A 123M	(2002) Zinc (Hot-Dip Galvanized) Coatings on Iron and Steel Products
ASTM A 167	(1999; R 2004) Stainless and Heat-Resisting Chromium-Nickel Steel Plate, Sheet, and Strip
ASTM A 176	(1999; R 2004) Stainless and Heat-Resisting Chromium Steel Plate, Sheet, and Strip
ASTM A 36/A 36M	(2005) Carbon Structural Steel
ASTM A 924/A 924M	(2006) General Requirements for Steel Sheet, Metallic-Coated by the Hot-Dip Process
ASTM B 117	(2003) Operating Salt Spray (Fog) Apparatus
ASTM B 209M	(2006) Aluminum and Aluminum-Alloy Sheet and Plate (Metric)
ASTM B 696	(2000; R 2004e1) Coatings of Cadmium

	Mechanically Deposited
ASTM D 1654	(2005) Evaluation of Painted or Coated Specimens Subjected to Corrosive Environments
ASTM E 2016	(2006) Industrial Woven Wire Cloth

NATIONAL ELECTRICAL MANUFACTURERS ASSOCIATION (NEMA)

NEMA MG 1	(2006) Motors and Generators

THE SOCIETY FOR PROTECTIVE COATINGS (SSPC)

SSPC PS 10.01	(1982; E 2004) Hot-Applied Coal Tar Enamel Painting System
SSPC Paint 16	(1982; E 2004) Coal Tar Epoxy-Polyamide Black (or Dark Red) Paint

UNDERWRITERS LABORATORIES (UL)

UL 507	(1999; Rev thru May 2006) Electric Fans
UL 746C	(2004; Rev thru Feb 2006) Polymeric Materials - Use in Electrical Equipment Evaluations
UL 900	(2004) Air Filter Units
UL 94	(1996; Rev thru Jun 2006) Tests for Flammability of Plastic Materials for Parts in Devices and Appliances

1.2 COORDINATION OF TRADES

Tank supports, piping offsets, fittings, and any other accessories required shall be furnished as required to provide a complete installation and to eliminate interference with other construction.

1.3 DELIVERY AND STORAGE

All equipment delivered and placed in storage shall be stored with protection from the weather, humidity and temperature variations, dirt and dust, or other contaminants.

1.4 FIELD MEASUREMENTS

The Contractor shall become familiar with all details of the work, verify all dimensions in the field, and shall advise the Contracting Officer of any discrepancy before performing the work.

1.5 SUBMITTALS

Government approval is required for submittals with a "G" designation; submittals not having a "G" designation are for information only. When used, a designation following the "G" designation identifies the office that will review the submittal for the Government. The following shall be submitted in accordance with Section 01330 SUBMITTAL PROCEDURES:

SD-02 Shop Drawings

Evaporative Cooling Systems; G TAC
Installation Drawings; G TAC

Drawings consisting of layout of equipment including assembly and installation details and electrical connection diagrams. Drawings shall include any information required to demonstrate that the system has been coordinated and will properly function system as a unit and shall show equipment relationship to other parts of the work, including clearances required for operation and maintenance.

SD-03 Product Data

Equipment; G AED

Manufacturer's catalog data included with the detail drawings for the following items. The data shall be highlighted to show model, size, options, etc., that are intended for consideration. Data shall be adequate to demonstrate compliance with contract requirements for the following:

a. Evaporative coolers

b. Air washers

c. Thermostats

Test Procedures; G AED

Proposed test procedures for performance tests of systems, at least 2 weeks prior to the start of related testing.

Installation; G AED

Proposed diagrams, at least 2 weeks prior to start of related testing. System diagrams that show the layout of equipment, piping, and ductwork, and typed condensed operation manuals explaining preventative maintenance procedures, methods of checking the system for normal, safe operation, and procedures for safely starting and stopping the system shall be framed under glass or laminated plastic. After approval, these items shall be posted where directed.

Manufacturer's Representative; G AED

A letter, at least 2 weeks prior to the start of work, listing the experience and training of the Manufacturer's Representative.

Service Organization; G AED

A letter, at least 2 weeks prior to the start of work, listing the experience and training of the Service Organization.

Performance Tests; G AED

Proposed test schedules for performance tests, at least 2 weeks

prior to the start of related testing.

Training Course; G AED

Proposed schedule for field training submitted at least 2 weeks prior to the start of related training.

SD-06 Test Reports

Testing, Adjusting, and Balancing; G AED

Test reports for the performance tests in booklet form, upon completion of testing. Reports shall document all phases of tests performed including initial test summary, all repairs/adjustments made, and final test results.

SD-07 Certificates

Installation Drawings; G AED

Concurrent with installation drawings, manufacturer's certification of installation drawings.

SD-10 Operation and Maintenance Data

Evaporative Cooling Systems; G AED

Manuals listing step-by-step procedures required for system startup, operation, shutdown, cleaning, and routine maintenance, at least 2 weeks prior to field training. The manuals shall include the manufacturer's name, model number, parts list, list of parts and tools that should be kept in stock by the owner for routine maintenance including the name of a local supplier, simplified wiring and controls diagrams, troubleshooting guide, and Service Organization (including address and telephone number) for each item of equipment.

1.6 QUALIFICATIONS

1.6.1 Manufacturer's Representative

Work specified in this section shall be performed under the supervision of and certified by the Manufacturer's Representative. Certification shall be provided for installation drawings, test procedures, and test results. The Manufacturer's Representative shall have no less than 3 continuous years of experience directly involved in the design and installation of evaporative cooling systems, and shall have served in a similar capacity on no fewer than five projects of similar size and scope during that period.

1.6.2 Service Organization

Work specified in this section shall be performed by a service organization certified by the System Manufacturer. The Service Organization shall have no less than 3 continuous years of experience directly involved in the installation, maintenance, and repair of evaporative cooling systems, and shall have served in a similar capacity on no fewer than five projects of similar size and scope during that period. The Service Organization submitted shall be capable of performing all maintenance and field repairs and providing 4 hour onsite response to a service call on an emergency

basis.

PART 2 PRODUCTS

2.1 STANDARD PRODUCTS

The evaporative cooling systems shall be designed and assembled by a manufacturer regularly engaged in the manufacturing of systems that are of a similar design, workmanship, capacity, and operation. Systems of similar design and capacity shall have been in satisfactory commercial or industrial use for 2 years before bid opening. The 2 years must be satisfactorily completed by a system which has been sold or is offered for sale on the commercial market through advertisements, manufacturers' catalogs, or brochures. Systems having less than a 2-year field service record will be acceptable if a certified record of satisfactory field operation, for not less than 6000 hours exclusive of the manufacturer's factory tests, can be shown. The system shall be supported by a service organization certified by the system manufacturer.

2.2 ASBESTOS PROHIBITION

Asbestos and asbestos-containing products shall not be used.

2.3 NAMEPLATES

All equipment shall have a nameplate that identifies the manufacturer's name, address, type or style, model or serial number, and catalog number.

2.4 SPECIAL TOOLS AND SPARE PARTS

One set of special tools, calibration devices, and instruments required for operation, calibration, and maintenance of the equipment shall be provided. In addition, a two year supply of all spare parts for system operation shall be furnished.

2.5 EQUIPMENT GUARDS AND ACCESS

Belts, pulleys, chains, gears, couplings, projecting setscrews, keys, and other rotating parts exposed to personnel contact shall be fully enclosed or guarded according to OSHA requirements. High temperature equipment and piping exposed to contact by personnel or where it creates a potential fire hazard shall be properly guarded or covered with insulation of a type specified. Catwalks, operating platforms, ladders, and guardrails shall be provided where shown and shall be constructed according to Section 05500 MISCELLANEOUS METAL.

2.6 PIPING COMPONENTS

Piping components shall be as specified in Section 15895 AIR SUPPLY, DISTRIBUTION, VENTILATION, AND EXHAUST SYSTEM.

2.7 AIR SUPPLY, DISTRIBUTION, VENTILATION, AND EXHAUST

All ductwork and related accessories, including air filters and terminal units, shall be as specified in Section 15895 AIR-SUPPLY, DISTRIBUTION, VENTILATION, AND EXHAUST SYSTEM.

2.8 ELECTRICAL WORK

Electrical motor-driven equipment specified shall be provided complete with motor, motor starter, and controls. Unless otherwise specified, electric equipment, including wiring, shall be according to Section 16402 INTERIOR DISTRIBUTION SYSTEM. Electrical characteristics and enclosure type shall be as shown. Use of the manufacturer's standard motor for motors less than 745 W or for single phase motors is acceptable. Motor starters shall be provided complete with thermal overload protection and other appurtenances necessary. Each motor shall be according to NEMA MG 1 and shall be of sufficient size to drive the equipment at the specified capacity without exceeding the nameplate rating of the motor. Manual or automatic control and protective or signal devices required for the operation specified, and any control wiring required for controls and devices, but not shown, shall be provided. Where two-speed or variable-speed motors are indicated, solid-state variable-speed controller may be provided to accomplish the same function. Solid-state variable-speed controllers shall be utilized for 0.745 kW through 7.45 kW (fractional hp through 10 hp) ratings. Adjustable frequency drives shall be used for larger motors.

2.9 MISCELLANEOUS MATERIALS

Materials shall conform to the following:

2.9.1 Aluminum Sheets

ASTM B 209M , Alloy 3003, temper H14.

2.9.2 Steel Sheets, Galvanized

ASTM A 924/A 924M, commercial quality.

2.9.3 Steel Sheets, Uncoated

ASTM A 1011/A 1011M, hot-rolled, commercial quality.

2.9.4 Structural Steel

ASTM A 36/A 36M.

2.9.5 Stainless Steel

ASTM A 167 and ASTM A 176.

2.9.6 Structural Polymeric Components

Components made of structural polymeric materials shall meet the applicable requirements of UL 746C.

2.9.7 Nonstructural Polymeric Components

Components not made of structural polymeric materials shall meet or exceed the requirements of UL 94 for Classifying Materials 94HB.

2.10 EVAPORATIVE COOLERS

Units shall be a self-contained direct, weather resistant drip type, draw through and shall conform to UL 507 and UL 746C. Unit shall be the side or vertical downblast discharge type as indicated. A guillotine type manual

winterizing damper complete with holding rack shall be provided on the discharge side of each unit. Holding rack shall retain damper during operating season.

2.10.1 Fan Unit

The unit shall be the centrifugal type and shall be complete with motor, drive equipment, and vibration-isolation supports between motor and fan housing. Water distributor or rotary wheel motor shall be synchronized to start and stop with the fan unit. Manual or automatic reset type thermal overload protection shall be provided in the starter or shall be integral with the motor. Motor starters shall be manual across-the-line type with weather resistant enclosure. Fan scroll and wheel shall be constructed of galvanized steel, aluminum, stainless steel, or polymeric material with stainless steel, hot-dip zinc coated steel or cadmium coated steel shaft. Fan scroll may be made of a different material than the wheel. Bearings shall be sleeve type, self-aligning and self-oiling with oil reservoirs, or precision self-aligning roller or ball-type with accessible grease fittings or permanently lubricated type. Grease fittings shall be connected to tubing and serviceable from a single accessible point. Bearing life shall be L50 rated at not less than 200,000 hours as defined by ABMA 9 and ABMA 11.

2.10.1.1 Fan Rating

Evaporative cooler fans shall have air delivery ratings based on AMCA 210 tests by an AMCA approved laboratory.

2.10.1.2 Retarding Agent

An ultraviolet retarding agent such as additives, gel coatings or other manufacturer approved equivalents shall be part of or applied on exterior nonmetallic components susceptible to ultraviolet degradation from sun rays and shall conform to UL 746C.

2.10.2 Evaporative Media

2.10.2.1 Evaporative and Eliminator Media for Drip Type Units

Media shall be fabricated of refined cellulose matrix, bonded synthetic fiber, glass fiber, or nonferrous metal. Media shall conform to UL 900 Class II. Media shall be of the type specifically manufactured for use with evaporative coolers. Nonferrous metal media shall be constructed of corrosion and fungus resistant material not susceptible to decomposition by fungal or bacterial action. Media shall be securely mounted in a galvanized steel, stainless steel, or polymeric material frame. Louvers shall be positioned in such manner that the water will not run on the outside surface. Nonrigid filter media shall be held in frame by a rigid retainer grid, a 6 mm (1/4 inch) wire mesh or fabric netting.

2.10.3 Water Handling Equipment

2.10.3.1 Water Handling Equipment for Drip Coolers

Water handling equipment shall thoroughly wet and continuously flush evaporative surfaces of the media material. The water distribution system shall be designed, to provide equal flow of water directly to the pads or to each trough. Troughs, if used, shall be adjustable hot-dip galvanized steel, stainless steel, or polymeric and suitably designed in a manner that will effectively regulate the flow of water to the media pad to obtain even

and complete saturation. Troughs shall be adjustable for leveling or sectionalized and each section supplied with water by means of an individual tube. The water pump shall be a centrifugal type with capacity and head characteristics for the specified operation of the unit and shall be provided with a low water safety shut-off. The motor shaft shall be constructed of stainless steel, hot-dip galvanized steel or cadmium coated steel. The impeller shall be constructed of stainless steel or polymeric material conforming to UL 746C. Pump housing shall be constructed of hot-dip zinc coated steel, brass, or polymeric material conforming to UL 746C. Pump housing bottom shall be removable for impeller cleaning and shall not permit galvanic action with cooler bottom. Pump shall have permanently sealed and lubricated bearings and fan cooled motor with moisture proof winding. Pump motor shall be provided with a factory installed three conductor rubber sheathed flexible cord with the third wire being the grounding conductor. Water pump shall be provided with a filter screen constructed of plastic or bronze.

2.10.3.2 Water Handling Equipment for Slinger Coolers

Water distribution to the evaporative pad shall be accomplished by a motor driven water slinger to uniformly distribute water to the pad.

2.10.3.3 Water Blowdown Equipment

Water shall be periodically dumped (approximately every six to twelve hours). This shall be done by either the use of a mechanical timer or by measuring the conductivity and dumping the water when the conductivity reaches 1500-2000 micro mhos.

2.11 AIR WASHERS

Air washers shall be furnished as a factory package unit, complete with fan unit, spray pump, nozzles, piping, evaporative cells, washdown cycle and eliminators. Air washers shall be spray type or sprayed cell type. A guillotine type manual winterizing damper complete with holding rack shall be provided on the discharge side of each unit. Holding rack shall retain damper during operating season.

2.11.1 Fan Unit

The unit shall be the centrifugal type and shall be complete with motor, drive equipment, and vibration-isolation supports between motor and fan housing. Spray pump shall be synchronized to start and stop with fan unit or on a timed cycle which allows the evaporative cells to be wetted prior to fan start. Manual reset type thermal overload protection shall be provided in the starter or shall be integral with the motor. The motor enclosure shall be dripproof totally enclosed type. Motor starters shall be manual across-the-line type with weather resistant enclosure. Fans and motors shall be provided with vibration isolation supports or mountings. Fan scroll and wheel shall be constructed of galvanized steel, aluminum, stainless steel or polymeric material with a stainless steel, hot-dip zinc coated steel, or cadmium coated steel shaft. Fan scroll may be made of a different material than the wheel. Fans shall have air delivery ratings based on tests by an AMCA approved laboratory to the AMCA 210.

2.11.2 Water-Handling Equipment

One or more banks of spray nozzles, flooding nozzles, water piping, spray pump, and strainers constitute water handling equipment. The number of

banks of spray nozzles shall be as required to produce the specified efficiency. Spray nozzles shall be self-cleaning, centrifugal type, constructed of brass, and provided with removable caps for cleaning. Flooding nozzles shall be constructed of machined brass or low pressure PVC nozzles. The spray pumps shall be centrifugal type with capacity and static pressure required for the spray equipment provided. Pump motor shall be a totally enclosed type suitable for the available electric service and provided with the thermal overload protection. Motor starter shall be manual across-the-line type with weather resistant enclosure. Unless otherwise indicated, all piping materials and installations shall be in conformance with Section 15400 PLUMBING, GENERAL PURPOSE.

2.11.3 Evaporative Cells

Cells shall consist of galvanized steel, stainless steel or polymeric material frames packed with glass fiber, bonded synthetic fiber or nonferrous metal screens, arranged in tiers. Media shall be of the type specifically manufactured for the use with air washers. Nonferrous metal media shall be constructed of corrosion and fungus resistant material not susceptible to decomposition by fungal or bacterial action. Each tier shall be independent of the others and shall have a separate spray header, drain sheet and drain conduit to the tank below.

2.11.4 Eliminator

Eliminators shall consist of vertical plates having a series of bends presenting a large surface area against which the water drops impinge and return down to the tank. Eliminator plates shall be constructed of galvanized steel or polymeric material and shall be positioned at both top and bottom. The eliminators shall be designed to prevent water carryover.

2.12 WATER TANKS

Water tanks shall be constructed of stainless steel, polymeric material, or minimum G90 galvanized steel and welds shall be coated with zinc-rich paint. The tank shall be provided with a means for drainage, a makeup connection, a float-operated valve, an overflow connection and, when required, a recirculating pump suction connection. The float valve shall be designed for a water working pressure of 862 kPa (125 psi) and both valve stems and seat disks shall be constructed of brass or other approved corrosion resisting material. Continuous bleed-off assembly or automatic flush system shall be provided. This system shall be adjustable to limit the concentrations from three to ten times the incoming water concentration.

2.13 CABINETS

Galvanized steel sheets, stainless steel or polymeric material shall be used in the construction of cabinets. Outside air inlets shall be protected with bird screens that conform to ASTM E 2016, Type I, Class 1, 2 by 2 mesh, 1.6 mm diameter aluminum wire or 0.8 mm diameter stainless steel wire. Cabinets shall provide access to all moving parts including fans, pumps, and float valves.

2.13.1 Metal Cabinets

Where possible, cabinets shall be factory assembled by either welded or bolted and screwed construction. Cabinets shall be braced and reinforced. Bolts, screws, hinges, trim, and other metal appurtenances shall be cadmium plated or galvanized in accordance with ASTM B 696 or ASTM A 123/A 123M.

When it is necessary to ship the unit disassembled, the cabinet sections shall be designed for assembly with cadmium plated or galvanized bolts. The interior and exterior of the galvanized steel cabinet, including hinges, handles, and other trim, shall be cleaned and chemically treated to assure paint adhesion. The interior bottom of cabinet shall be factory coated with coal tar based enamel or epoxy and shall meet the requirements of SSPC PS 10.01 or SSPC Paint 16. Galvanized surfaces damaged during fabrication or handling shall be given a coat of zinc-rich paint. Finish shall be as specified in paragraph PAINTING AND FINISHING. Gauge of cabinet components shall be as indicated in TABLES I and II.

TABLE I. STEEL CABINET (MINIMUM THICKNESS mm)

Component part of cooler	Nominal Size of Industry Standard Air Rating 0/1650 L/s	1651/2600 L/s	2601/0 L/s	3301/7500 L/s
Water tank	0.85	0.85	1.0	1.3
Corner posts	0.75	0.75	0.75	1.0
Sides	0.85	0.85	0.85	0.85
Louver pad holder	0.5	0.5	0.5	0.5
Blower scroll	0.75	0.85	1.0	1.0
Blower wheel	0.85	0.85	0.85	1.0
Drip trough	0.5	0.55	0.55	0.55
Top	0.85	0.85	1.0	1.0

TABLE II. STAINLESS STEEL CABINET (MINIMUM THICKNESS mm)

Component part	Nominal Size of Industry Standard Air Rating 0/2100 L/s	02101/3050 L/s	Beyond 3050 L/s
Corner posts	0.65	0.65	*
Bottom pan	0.8	0.95	*
Top pan	0.8	0.95	*

* In accordance with manufacturer's standards.

2.13.2 Polymeric Material Cabinets

Unit cabinets shall be constructed of polymeric materials, such as fiberglass or polypropylene and shall meet the requirements of UL 746C, Figure 12.1.

2.14 PREVENTION OF GALVANIC CORROSION

Materials that will be exposed to water during operation of the unit shall be such that galvanic action will not occur in the normal operation of the

equipment. The interior of water tank and cabinet and the exterior of the fan housing shall be finished with an enamel paint coat or epoxy coating. There will be no evidence of holidays and particular attention will be given to sealing joints. Media retainer will not be coated. This paragraph does not apply to nonmetallic materials or the interior water tank and cabinet of stainless steel materials.

2.15 CONTROLS

Controls shall be as specified in Section 15950 HVAC CONTROL SYSTEMS.

2.16 THERMOSTATS

Thermostats shall be line voltage heavy duty type 115 volt ac and shall have an electrical rating greater than the cooler being controlled or shall be low voltage type. Thermostats shall have a range of 7 to 29 degrees C (45 to 85 degrees F) with 1 degree C differential range. Thermostats shall be UL listed and shall have an indicator and a transparent cover with lock.

PART 3 EXECUTION

3.1 INSTALLATION

All equipment shall be installed as shown and in accordance with the manufacturer's diagrams and recommendations except where otherwise indicated. Units shall be connected to the building's water supply system. Piping installation shall be as specified in Section 15895 AIR SUPPLY, DISTRIBUTION, VENTILATION, AND EXHAUST SYSTEM. A globe or gate valve and union shall be installed in the water supply line adjacent to each unit. Valves shall not be installed with stems below the horizontal. All supply piping shall be sloped to drain to the indicated stop and waste valve.

3.2 AIR-SUPPLY AND DISTRIBUTION SYSTEM

Equipment, sheet metal work, air filters, and terminal units shall be installed as specified in Section 15895 AIR SUPPLY, DISTRIBUTION, VENTILATION, AND EXHAUST SYSTEM.

3.3 PAINTING AND FINISHING

3.3.1 Factory Coating

Equipment and component items, when fabricated from ferrous metal, shall be factory finished with the manufacturer's standard finish except that all components inside and outside of the evaporative cooling unit shall have weather resistant finishes that will withstand 500 hours of exposure to the salt spray test specified in ASTM B 117 and ASTM D 1654 using a 5 percent sodium chloride solution. Immediately after completion of the test, the specimen shall show no signs of blistering, wrinkling, cracking, or loss of adhesion, and no sign of rust creepage beyond 3 mm on either side of the scratch mark. Upon request of the Contracting Officer, results of the test will be submitted by the manufacturer.

3.3.2 Field Painting

Painting of surfaces not otherwise specified, including nonferrous metals, finish painting of items only primed at the factory, and field repair of factory finish, is specified in Section 09 90 00 PAINTING, GENERAL.

3.4 CLEANING

Ducts, plenums, and casings shall be thoroughly cleaned of all debris and blown free of all small particles of rubbish and dust before installing outlet faces. Equipment shall be wiped clean, with all traces of oil dust, dirt, or paint spots removed. Temporary filters shall be provided for all fans that are operated during construction, and after all construction dirt has been removed from the building, new filters shall be installed. Bearings shall be properly lubricated with oil or grease as recommended by the manufacturer.

3.5 TESTING, ADJUSTING, AND BALANCING

Testing, adjusting, and balancing shall be as specified in Section 15990 TESTING, ADJUSTING, AND BALANCING OF HVAC SYSTEMS.

3.6 PERFORMANCE TESTS

After testing, adjusting, and balancing has been completed as specified, the system shall be tested as a whole to see that all items perform as integral parts of the system and that operation is as specified. Corrections and adjustments shall be made as necessary to produce the conditions indicated or specified. Capacity tests and general operating tests shall be conducted by the Manufacturer's Representative. Tests shall cover a period of not less than 7 days and shall demonstrate that the entire system is functioning according to the specifications. Ambient air temperature and supply air temperature and quantity readings shall be made at hourly intervals for the duration of the time period.

3.7 TRAINING COURSE

The Contractor shall conduct a training course for operating staff as designated by the Contracting Officer. The training period, for a total of 24 hours of normal working time, shall start after the system is functionally completed but prior to final acceptance tests. The field instructions shall cover all of the items contained in the approved operation and maintenance instructions.

-- End of Section --

SECTION 15700

UNITARY HEATING AND COOLING EQUIPMENT

PART 1 GENERAL

1.1 REFERENCES

The publications listed below form a part of this specification to the extent referenced. The publications are referred to within the text by the basic designation only.

AIR-CONDITIONING AND REFRIGERATION INSTITUTE (ARI)

ARI 210/240	(2003) Unitary Air-Conditioning and Air-Source Heat Pump Equipment
ARI 460	(2000) Remote Mechanical-Draft Air-Cooled Refrigerant Condensers
ARI 700	(2004) Specifications for Fluorocarbon and Other Refrigerants

ASTM INTERNATIONAL (ASTM)

ASTM E 84	(2004) Surface Burning Characteristics of Building Materials
ASTM F 872	(1984; R 1990) Filter Units, Air Conditioning: Viscous-Impingement Type, Cleanable
ASTM B 280	(2003) Seamless Copper Tube for Air Conditioning and Refrigeration Field Service

AMERICAN SOCIETY OF HEATING, REFRIGERATING AND AIR-CONDITIONING ENGINEERS (ASHRAE)

ASHRAE 15	(2001; Errata 2002) Safety Standard for Refrigeration Systems
ASHRAE 34	(2001; Errata 2002) Designation and Safety Classification of Refrigerants
ASHRAE 90.1	(2001; various Errata) Energy Standard for Buildings Except Low-Rise Residential Buildings

AMERICAN WELDING SOCIETY (AWS)

AWS Z49.1	(1999) Safety in Welding and Cutting
AWS A5.8	(1992) Filler Metals for Brazing and Braze Welding

ASME INTERNATIONAL (ASME)

ASME B31.5	(2001) Refrigeration Piping and Heat Transfer Components
ASME BPVC SEC IX	(2001) Boiler and Pressure Vessel Code; Section IX, Welding and Brazing Qualifications
ASME BPVC SEC VIII D1	(2001) Boiler and Pressure Vessel Code; Section VIII, Pressure Vessels Division 1 - Basic Coverage

NATIONAL ELECTRICAL MANUFACTURERS ASSOCIATION (NEMA)

NEMA ICS 6	(1993; R 2001) Industrial Control and Systems, Enclosures
NEMA MG 1	(2003; R 2004) Motors and Generators

NATIONAL FIRE PROTECTION ASSOCIATION (NFPA)

NFPA 70	(2005) National Electrical Code

UNDERWRITERS LABORATORIES (UL)

UL 207	(2001) Refrigerant-Containing Components and Accessories, Nonelectrical

1.2 SUBMITTALS

Government approval is required for submittals with a "G" designation; submittals not having a "G" designation are for information only. When used, a designation following the "G" designation identifies the office that will review the submittal for the Government. Submit the following in accordance with Section 01330 SUBMITTAL PROCEDURES:

SD-03 Product Data

Unitary Equipment

Manufacturer's standard catalog data, at least 5 weeks prior to the purchase or installation of a particular component, highlighted to show material, size, options, performance charts and curves, etc. in adequate detail to demonstrate compliance with contract requirements. Data shall include manufacturer's recommended installation instructions and procedures. If vibration isolation is specified for a unit, vibration isolator literature shall be included containing catalog cuts and certification that the isolation characteristics of the isolators provided meet the manufacturer's recommendations. Data shall be submitted for each specified component.

SD-06 Test Reports

REFRIGERANT TESTS, CHARGING, AND START-UP

Two copies of each test containing the information described below.

a. The date the tests were performed.
b. A list of equipment used, with calibration certifications.
c. Initial test summaries.
d. Repairs/adjustments performed.
e. Final test results.

SYSTEM PERFORMANCE TESTS

Two copies of the report provided in bound booklets. The report shall document compliance with the specified performance criteria upon completion and testing of the system. The report shall indicate the number of days covered by the tests and any conclusions as to the adequacy of the system. The report shall also include the following information and shall be taken at least three different times at outside dry-bulb temperatures that are at least 3 degrees C apart:

a. Date and outside weather conditions.
b. The load on the system based on the following:

(1) The refrigerant used in the system.
(2) Condensing temperature and pressure.
(3) Suction temperature and pressure.
(4) Ambient, condensing and coolant temperatures.
(5) Running current, voltage and proper phase sequence for each phase of all motors.

c. The actual on-site setting of operating and safety controls.
d. Thermostatic expansion valve superheat - value as determined by field test.
e. Subcooling.
f. High and low refrigerant temperature switch set-points
g. Low oil pressure switch set-point.
h. Defrost system timer and thermostat set-points.
i. Capacity control set-points.
j. Field data and adjustments which affect unit performance and energy consumption.

l. Field adjustments and settings which were not permanently marked as an integral part of a device.

SD-10 Operation and Maintenance Data

Operation Manuals

Provide complete copies of an operation manual in bound booklets listing step-by-step procedures required for system startup, operation, abnormal shutdown, emergency shutdown, and normal shutdown prior to the first training course. The booklets shall include the manufacturer's name, model number, and parts list. The manuals shall include the manufacturer's name, model number, service manual, and a brief description of all equipment and their basic operating features.

Maintenance Manuals

Provide complete copies of maintenance manual in bound booklets listing routine maintenance procedures, possible breakdowns and

repairs, and a trouble shooting guide. The manuals shall include piping and equipment layouts and simplified wiring and control diagrams of the system as installed.

Operation and Maintenance Manuals shall be as required in Section 01060: SPECIAL CLAUSE entitled OPERATION AND MAINTENANCE (O&M) DATA FOR EQUIPMENT AND SYSTEMS, and include the additional requirements as specified hereinafter. In the event of a conflict, the more detailed requirement shall apply.

1.3 SAFETY REQUIREMENTS

Exposed moving parts, parts that produce high operating temperature, parts which may be electrically energized, and parts that may be a hazard to operating personnel shall be insulated, fully enclosed, guarded, or fitted with other types of safety devices. Safety devices shall be installed so that proper operation of equipment is not impaired. Welding and cutting safety requirements shall be in accordance with AWS Z49.1.

1.4 DELIVERY, STORAGE, AND HANDLING

Stored items shall be protected from the weather, humidity and temperature variations, dirt and dust, or other contaminants. Proper protection and care of all material both before and during installation shall be the Contractor's responsibility. Any materials found to be damaged shall be replaced at the Contractor's expense. During installation, piping and similar openings shall be capped to keep out dirt and other foreign matter.

1.5 PROJECT/SITE CONDITIONS

1.5.1 Drawings

Because of the small scale of the drawings, it is not possible to indicate all offsets, fittings, and accessories that may be required. The Contractor shall carefully investigate the plumbing, fire protection, electrical, structural and finish conditions that would affect the work to be performed and arrange such work accordingly, furnishing required offsets, fittings, and accessories to meet such conditions.

1.6 REFRIGERANTS

Refrigerants shall have an Ozone Depletion Factor (ODF) of 0.05 or less. The ODF shall be in accordance with the "Montreal Protocol On Substances That Deplete The Ozone Layer," September 1987, sponsored by the United Nations Environment Programme. CFCs and HCFCs shall not be permitted. Refrigerant shall be an approved alternative refrigerant per EPA's Significant New Alternative Policy (SNAP) listing.

PART 2 PRODUCTS

2.1 STANDARD COMMERCIAL PRODUCTS

Materials and equipment shall be standard products of a manufacturer regularly engaged in the manufacturing of such products, which are of a similar material, design and workmanship. The standard products shall have been in satisfactory commercial or industrial use for 2 years prior to bid opening. The 2 year use shall include applications of equipment and materials under similar circumstances and of similar size. The 2 years experience shall be satisfactorily completed by a product which has been

sold or is offered for sale on the commercial market through advertisements, manufacturer's catalogs, or brochures. Products having less than a 2 year field service record shall be acceptable if a certified record of satisfactory field operation, for not less than 6000 hours exclusive of the manufacturer's factory tests, can be shown. All materials shall be according to United States standards. System components shall be environmentally suitable for the indicated locations.

2.2 NAMEPLATES

Major equipment including compressors, condensers, receivers, heat exchanges, fans, and motors shall have the manufacturer's name, address, type or style, model or serial number, and catalog number on a plate secured to the item of equipment. Plates shall be durable and legible throughout equipment life. Plates shall be fixed in prominent locations with nonferrous screws or bolts.

2.3 ELECTRICAL WORK

Electrical equipment, motors, motor efficiencies, and wiring shall be in accordance with Section 16402 INTERIOR DISTRIBUTION SYSTEM. Electrical motor driven equipment specified shall be provided complete with motors, motor starters, and controls. Electrical characteristics shall be as shown, and unless otherwise indicated, all motors of 746 kW (1 hp) and above with open, dripproof, totally enclosed, or explosion proof fan cooled enclosures, shall be high efficiency type. Field wiring shall be in accordance with manufacturer's instructions. Each motor shall conform to NEMA MG 1 and NEMA MG 2 and be of sufficient size to drive the equipment at the specified capacity without exceeding the nameplate rating of the motor. Motors shall be continuous duty with the enclosure specified. Motor starters shall be provided complete with thermal overload protection and other appurtenances necessary for the motor control indicated. Motors shall be furnished with a magnetic across-the-line or reduced voltage type starter as required by the manufacturer. Motor duty requirements shall allow for maximum frequency start-stop operation and minimum encountered interval between start and stop. Motors shall be sized for the applicable loads. Motor torque shall be capable of accelerating the connected load within 20 seconds with 80 percent of the rated voltage maintained at motor terminals during one starting period. Motor bearings shall be fitted with grease supply fittings and grease relief to outside of enclosure. Manual or automatic control and protective or signal devices required for the operation specified and any control wiring required for controls and devices specified, but not shown, shall be provided.

2.4 UNITARY EQUIPMENT, ROOM UNIT

Unit shall be an air-cooled, split system which employs a remote condensing unit, a separate indoor unit, and interconnecting refrigerant piping. Unit shall be the heat pump type. Unit shall be provided with necessary fans, air filters, and liquid receiver. Ductless split evaporator shall be heat pump duty either wall or ceiling mounted, as noted on plans, with integral supply and return grilles and discharge drain pans with drain connection. Ductless unit shall have fan directly driven by multispeed, filters electric motor and shall have cleanable filters.

2.5 UNITARY EQUIPMENT, SPLIT SYSTEM

Unit shall be an air-cooled, split system which employs a remote condensing unit, a separate indoor unit, and interconnecting refrigerant piping.

Unitshall be the heat pump type conforming to applicable Underwriters Laboratories (UL) standards including UL 1995. Unit shall be rated in accordance with ARI 210/240. Unit shall be provided with necessary fans, air filters, coil frost protection, liquid receiver, internal dampers, supplemental heat, and cabinet construction as specified in paragraph " Unitary Equipment Components". The remote unit shall be as specified in paragraph REMOTE CONDENSER OR CONDENSING UNIT.

2.5.1 Air-to-Refrigerant Coil

Coils shall have copper tubes of 10 mm minimum diameter with copper or aluminum fins that are mechanically bonded or soldered to the tubes. Casing shall be galvanized steel or aluminum. Contact of dissimilar metals shall be avoided. Coils shall be tested in accordance with ASHRAE 15 at the factory and be suitable for the working pressure of the installed system. Each coil shall be dehydrated and sealed after testing and prior to evaluation and charging. Each unit shall be provided with a factory operating charge of refrigerant and oil or a holding charge. Unit shipped with a holding charge shall be field charged. Separate expansion devices shall be provided for each compressor circuit.

2.5.2 Refrigeration Circuit

Refrigerant-containing components shall comply with ASHRAE 15 and be factory tested, cleaned, dehydrated, charged, and sealed. Refrigerant charging valves and connections, and pumpdown valves shall be provided for each circuit. Filter-drier shall be provided in each liquid line and be reversible-flow type.

2.5.3 Unit Controls

Unit shall be internally prewired with a low volt control circuit powered by an internal transformer. Terminal blocks shall be provided for power wiring and external control wiring. Unit shall have cutoffs for high and low pressure, and low oil pressure for compressors with positive displacement oil pumps. Adjustable-cycle timers shall prevent short-cycling. Multiple compressors shall be staged by means of a time delay. Unit shall be internally protected by fuses or a circuit breaker in accordance with UL 1995. Low cost cooling shall be made possible by means of a control circuit which will modulate dampers to provide 100 percent outside air while locking out compressors.

2.5.4 Remote Condenser Or Condensing Unit

Each remote condenser coil shall be fitted with a manual isolation valve and an access valve on the coil side. Saturated refrigerant condensing temperature shall not exceed 49 degrees C at 40 degrees C ambient. Fan and condenser motors shall have dripproof enclosures.

2.5.4.1 Air-Cooled Condenser

Unit shall be rated in accordance with ARI 460 and conform to the requirements of UL 1995. Unit shall be factory fabricated, tested, packaged, and self-contained. Unit shall be complete with casing, propeller or centrifugal type fans, heat rejection coils, connecting piping and wiring, and all necessary appurtenances.

2.5.4.2 Connections

Interconnecting refrigeration piping, electrical power, and control wiring between the condensing unit and the indoor unit shall be provided as required and as indicated. Electrical and refrigeration piping terminal connections between condensing unit and evaporator units shall be provided.

2.5.4.3 Condensing Coil

Coils shall have copper tubes of 10 mm minimum diameter with copper or aluminum fins that are mechanically bonded or soldered to the tubes. Casing shall be galvanized steel or aluminum. Contact of dissimilar metals shall be avoided. Coils shall be tested in accordance with ASHRAE 15 at the factory and be suitable for the working pressure of the installed system. Each coil shall be dehydrated and sealed after testing and prior to evaluation and charging. Each unit shall be provided with a factory operating charge of refrigerant and oil or a holding charge. Unit shipped with a holding charge shall be field charged. Separate expansion devices shall be provided for each compressor circuit.

2.5.4.4 Unit Controls

The control system shall be complete with required accessories for regulating condenser pressure by fan cycling, modulating condenser coil or fan dampers, flooding the condenser, or a combination of the above. Unit mounted control panels or enclosures shall be constructed in accordance with applicable requirements of NFPA 70 and housed in NEMA ICS 6, Class 1 or 3A enclosures. Controls shall include control transformer, time delay start-up, overload protective devices, interface with local and remote components, and intercomponent wiring to terminal block points.

2.5.4.5 Compressor

Unit shall be rated in accordance with ARI 500. Compressor shall be direct drive, semi-hermetic or hermetic reciprocating, or scroll type capable of operating at partial load conditions. Compressor shall be capable of continuous operation down to the lowest step of unloading as specified. Units 35 kW and larger shall be provided with capacity reduction devices to produce automatic capacity reduction of at least 50 percent. If standard with the manufacturer, two or more compressors may be used in lieu of a single compressor with unloading capabilities, in which case the compressors will operate in sequence, and each compressor shall have an independent refrigeration circuit through the condenser and evaporator. Each compressor shall start in the unloaded position. Each compressor shall be provided with vibration isolators, crankcase heater, thermal overloads, and high pressure safety cutoffs and protection against short cycling.

2.6 EQUIPMENT EFFICIENCY

Minimum energy efficiency shall be in accordance with ASHRAE 90.1.

2.7 UNITARY EQUIPMENT COMPONENTS

Minimum energy efficiency shall be in accordance with ASHRAE 90.1.

2.7.1 Refrigerant and Oil

Refrigerant shall be one of the fluorocarbon gases. Refrigerants shall

have number designations and safety classifications in accordance with ASHRAE 34. Refrigerants shall meet the requirements of ARI 700 as a minimum. Contractor shall provide and install a complete charge of refrigerant for the installed system as recommended by the manufacturer. Except for factory sealed units, two complete charges of lubricating oil for each compressor crankcase shall be furnished. One charge shall be used during the system performance testing period. Following the satisfactory completion of the performance testing, the oil shall be drained and replaced with a second charge. Lubricating oil shall be of a type and grade recommended by the manufacturer for each compressor. Where color leak indicator dye is incorporated, charge shall be in accordance with manufacturer's recommendation.

2.7.2 Fans

Fan wheel shafts shall be supported by either maintenance-accessible lubricated antifriction block-type bearings, or permanently lubricated ball bearings. Unit fans shall be selected to produce the cfm required at the fan total pressure. Motor starters, if applicable, shall be magnetic across-the-line type with a dripproof enclosure. Thermal overload protection shall be of the manual or automatic-reset type. Fan wheels or propellers shall be constructed of aluminum or galvanized steel. Centrifugal fan wheel housings shall be of galvanized steel, and both centrifugal and propeller fan casings shall be constructed of aluminum or galvanized steel. Fan wheels or propellers shall be statically and dynamically balanced. Belt-driven fans shall have adjustable sheaves to provide not less than 20 percent fan-speed adjustment. The sheave size shall be selected so that the fan speed at the approximate midpoint of the sheave adjustment will produce the specified air quantity. Each drive will be independent of any other drive. Propeller fans shall be direct-drive drive type with fixed pitch blades. V-belt driven fans shall be mounted on a corrosion protected drive shaft supported by either maintenance-accessible lubricated antifriction block-type bearings, or permanently lubricated ball bearings. Each drive will be independent of any other drive. Drive bearings shall be protected with water slingers or shields. V-belt drives shall be fitted with guards where exposed to contact by personnel and adjustable pitch sheaves.

2.7.3 Primary/Supplemental Heating

2.7.3.1 Electric Heating Coil

Coil shall be duct- or unit-mounted. Coil shall be provided with a built-in or surface-mounted high-limit thermostat interlocked electrically so that the coil cannot be energized unless the fan is energized. Coil casing and support brackets shall be of galvanized steel or aluminum. Coil shall be mounted to eliminate noise from expansion and contraction and be completely accessible for service.

2.7.4 Air Filters

Air filters shall be as herein after specified.

2.7.4.1 Extended Surface Pleated Panel Filters

Filters shall be 50 mm (2 inch) depth sectional type of the size indicated and shall have an average efficiency of 25 to 30 percent when tested in accordance with DIN, I.E.C., BS, or EN standards. Media shall be nonwoven cotton and synthetic fiber mat. A wire support grid bonded to the media

shall be attached to a moisture resistant fiberboard frame. Four edges of the filter media shall be bonded to the inside of the frame to prevent air bypass and increase rigidity.

2.7.4.2 Replaceable Media Filters

Replaceable media filters shall be the dry-media type, of the size required to suit the application. Filtering media shall be not less than 25 mm (1 inches) thick fibrous glass media pad supported by a structural wire grid or woven wire mesh. Pad shall be enclosed in a holding frame of not less than 1.6 mm (16 gauge) galvanized steel, and equipped with quick-opening mechanism for changing filter media.

2.7.4.3 Sectional Cleanable Filters

Cleanable filters shall conform to ASTM F 872 and be 25 mm thick. Viscous adhesive shall be provided in 18.9 L (5 gallon) containers in sufficient quantity for 12 cleaning operations and not less than 1 L (one quart) for each filter section. Initial pressure drop for clean filters shall not exceed the applicable values listed in ASTM F 872.

2.7.5 Pressure Vessels

Pressure vessels shall conform to ASME BPVC SEC VIII D1 or UL 207, as applicable for maximum and minimum pressure or temperature encountered. Where referenced publications do not apply, pressure components shall be tested at 1-1/2 times design working pressure. Refrigerant wetted carbon steel surfaces shall be pickled or abrasive blasted free of mill scale, cleaned, dried, charged, and sealed.

2.7.6 Internal Dampers

Dampers shall be parallel blade type with renewable blade seals and be integral to the unitary unit. Damper provisions shall be provided for each outside air intake, exhaust, economizer, and mixing boxes. Dampers shall operate as specified.

2.7.7 Mixing Boxes

Mixing boxes shall match the base unit in physical size and shall include equally-sized flanged openings, each capable of full air flow. Arrangement shall be as indicated.

2.7.8 Cabinet Construction

Casings for the specified unitary equipment shall be constructed of galvanized steel or aluminum sheet metal and galvanized or aluminum structural members. Casing shall be fitted with lifting provisions, access panels or doors, fan vibration isolators, electrical control panel, corrosion-resistant components, structural support members, insulated condensate drip pan and drain, and internal insulation in the cold section of the casing. Provisions to permit replacement of major unit components shall be incorporated. Penetrations of cabinet surfaces, including the floor, shall be sealed. Unit shall be fitted with a drain pan which extends under all areas where water may accumulate. Extent and effectiveness of the insulation of unit air containment surfaces shall prevent, within limits of the specified insulation, heat transfer between the unit exterior and ambient air, heat transfer between the two conditioned air streams, and condensation on surfaces. Paint and finishes shall comply with the

requirements specified in paragraph FACTORY COATING.

2.7.8.1 Outdoor Cabinet

Outdoor cabinets shall be suitable for outdoor service with a weathertight, insulated and corrosion-protected structure. Cabinets constructed exclusively for indoor service which have been modified for outdoor service are not acceptable.

2.8 ACCESSORIES

2.8.1 Refrigerant Relief Valve/Rupture Disc Assembly

The assembly shall be a combination pressure relief valve and rupture disc designed for refrigerant usage. The assembly shall be in accordance with ASME BPVC SEC VIII D1 and ASHRAE 15. The assembly shall be provided with a pressure gauge assembly which will provide local indication if a rupture disc is broken. Rupture disc shall be the non-fragmenting type.

2.8.2 Bolts and Nuts

Bolts and nuts shall be in accordance with manufacturer's recommendations. The bolt head shall be marked to identify the manufacturer and the standard with which the bolt complies.

2.8.3 Bird Screen

Screen shall be 12 mm by 12 mm aluminum or stainless steel wire mesh.

2.9 FABRICATION

2.9.1 Factory Coating

Unless otherwise specified, equipment and component items, when fabricated from ferrous metal, shall be factory finished with the manufacturer's standard finish. Cut edges of galvanized surfaces where hot-dip galvanized sheet steel is used shall be coated with a zinc-rich coating.

2.9.2 Factory Applied Insulation

Refrigeration equipment shall be provided with factory installed insulation on surfaces subject to sweating including the suction line piping. Where motors are the gas-cooled type, factory installed insulation shall be provided on the cold-gas inlet connection to the motor per manufacturer's standard practice. Factory insulated items installed outdoors are not required to be fire-rated. As a minimum, factory insulated items installed indoors shall have a flame spread index no higher than 75 and a smoke developed index no higher than 150. Factory insulated items (no jacket) installed indoors and which are located in air plenums, in ceiling spaces, and in attic spaces shall have a flame spread index no higher than 25 and a smoke developed index no higher than 50. Flame spread and smoke developed indexes shall be determined by ASTM E 84. Insulation shall be tested in the same density and installed thickness as the material to be used in the actual construction. Material supplied by a manufacturer with a jacket shall be tested as a composite material. Jackets, facings, and adhesives shall have a flame spread index no higher than 25 and a smoke developed index no higher than 50 when tested in accordance with ASTM E 84.

2.10 SUPPLEMENTAL COMPONENTS/SERVICES

2.10.1 Refrigerant Piping

Refrigerant piping, valves, and accessories shall be in accordance with ASHRAE 15 and ASME B31.5, except as specified herein. Refrigerant piping, and accessories shall be compatible with the fluids used and capable of withstanding the pressures and temperatures of the service. Refrigerant piping, and accessories used for refrigerant service shall be cleaned, dehydrated, and sealed (capped or plugged) prior to shipment from the manufacturer's plant.

2.10.1.1 Copper Tubing

Copper tubing shall conform to ASTM B 280 annealed or hard drawn as required. Copper tubing shall be soft annealed where bending is required and hard drawn where no bending is required.

2.10.1.2 Brazing Filler Metal

Filler metal shall conform to AWS A5.8, Type BAg-5 with AWS Type 3 flux, except Type BCuP-5 or BCuP-6 may be used for brazing copper-to-copper joints.

2.10.2 Ductwork

Ductwork shall be provided and installed in accordance with Section 15895 AIR SUPPLY, DISTRIBUTION, VENTILATION, AND EXHAUST SYSTEM.

2.10.3 Temperature Controls

Temperature controls shall be in accordance with Section 15950 HEATING, VENTILATING AND AIR CONDITIONING (HVAC) CONTROL SYSTEMS.

PART 3 EXECUTION

3.1 INSTALLATION

Work shall be performed in accordance with the manufacturer's published diagrams, recommendations, and equipment warranty requirements. Where equipment is specified to conform to the requirements of ASME BPVC SEC VIII D1and ASME BPVC SEC IX the design, fabrication, and installation of the system shall conform to ASME BPVC SEC VIII D1 and ASME BPVC SEC IX.

3.1.1 Equipment

Refrigeration equipment and the installation thereof shall conform to ASHRAE 15. Necessary supports shall be provided for all equipment, appurtenances, and pipe as required, including frames or supports for compressors, condensers, and similar items. Compressors shall be isolated from the building structure. If mechanical vibration isolators are not provided, vibration absorbing foundations shall be provided. Each foundation shall include isolation units consisting of machine and floor or foundation fastenings, together with intermediate isolation material. Other floor-mounted equipment shall be set on not less than a 150 mm concrete pad doweled in place. Foundation drawings, bolt-setting information, and foundation bolts shall be furnished prior to concrete foundation construction for all equipment indicated or required to have concrete foundations. Concrete for foundations shall be as specified in

Section 03300 CAST-IN-PLACE STRUCTURAL CONCRETE. Equipment shall be properly leveled, aligned, and secured in place in accordance with manufacturer's instructions.

3.1.2 Mechanical Room Ventilation

Mechanical ventilation systems shall be in accordance with Section 15895 AIR SUPPLY, DISTRIBUTION, VENTILATION, AND EXHAUST SYSTEM.

3.1.3 Field Applied Insulation

Field applied insulation shall be as specified in Section 15080 THERMAL INSULATION FOR MECHANICAL SYSTEMS, except as defined differently herein.

3.1.4 Field Painting

Painting required for surfaces not otherwise specified, and finish painting of items only primed at the factory are specified in Section 09900 PAINTING, GENERAL.

3.2 CLEANING AND ADJUSTING

Equipment shall be wiped clean, with all traces of oil, dust, dirt, or paint spots removed. Temporary filters shall be provided for all fans that are operated during construction, and new filters shall be installed after all construction dirt has been removed from the building. System shall be maintained in this clean condition until final acceptance. Bearings shall be properly lubricated with oil or grease as recommended by the manufacturer. Belts shall be tightened to proper tension. Control valves and other miscellaneous equipment requiring adjustment shall be adjusted to setting indicated or directed. Fans shall be adjusted to the speed indicated by the manufacturer to meet specified conditions. Testing, adjusting, and balancing shall be as specified in Section 15990 TESTING, ADJUSTING, AND BALANCING OF HVAC SYSTEMS.

3.3 REFRIGERANT TESTS, CHARGING, AND START-UP

Split-system refrigerant piping systems shall be tested and charged as per manufacturer's recommendations. Following charging, packaged systems shall be tested for leaks with a halide torch or an electronic leak detector.

3.3.1 Refrigerant Leakage

If a refrigerant leak is discovered after the system has been charged, the leaking portion of the system shall immediately be isolated from the remainder of the system and the refrigerant pumped into the system receiver or other suitable container. Under no circumstances shall the refrigerant be discharged into the atmosphere.

3.3.2 Contractor's Responsibility

The Contractor shall, at all times during the installation and testing of the refrigeration system, take steps to prevent the release of refrigerants into the atmosphere. The steps shall include, but not be limited to, procedures which will minimize the release of refrigerants to the atmosphere and the use of refrigerant recovery devices to remove refrigerant from the system and store the refrigerant for reuse or reclaim. At no time shall more than 85 g (3 ounces) of refrigerant be released to the atmosphere in any one occurrence. Any system leaks within the first

year shall be repaired in accordance with the requirements herein at no cost to the Government including material, labor, and refrigerant if the leak is the result of defective equipment, material, or installation.

3.4 SYSTEM PERFORMANCE TESTS

Before each refrigeration system is accepted, tests to demonstrate the general operating characteristics of all equipment shall be conducted by a registered professional engineer or an approved manufacturer's start-up representative experienced in system start-up and testing, at such times as directed. Tests shall cover a period of not less than 48 hours for each system and shall demonstrate that the entire system is functioning in accordance with the drawings and specifications. Corrections and adjustments shall be made as necessary and tests shall be re-conducted to demonstrate that the entire system is functioning as specified. Prior to acceptance, service valve seal caps and blanks over gauge points shall be installed and tightened. Any refrigerant lost during the system startup shall be replaced. If tests do not demonstrate satisfactory system performance, deficiencies shall be corrected and the system shall be retested. Tests shall be conducted in the presence of the Government. Water and electricity required for the tests will be furnished by the Government. Any material, equipment, instruments, and personnel required for the test shall be provided by the Contractor. Field tests shall be coordinated with Section 15990 TESTING, ADJUSTING, AND BALANCING OF HVAC SYSTEMS.

3.5 DEMONSTRATIONS

Contractor shall conduct a training course for the operating staff as designated by the Contracting Officer. The training period shall consist of a total 16 hours of normal working time and start after the system is functionally completed but prior to final acceptance tests. The field Posted Instructions shall cover all of the items contained in the approved operation and maintenance manuals as well as demonstrations of routine maintenance operations.Training course shall cover operation of equipment per manufacturer's operation manuals. Cover Spare Parts Data during training course.

-- End of Section --

SECTION 15702

COMPUTER ROOM AIR CONDITIONING UNITS

PART 1 GENERAL

1.1 REFERENCES

The publications listed below form a part of this specification to the extent referenced. The publications are referred to within the text by the basic designation only.

AIR-CONDITIONING AND REFRIGERATION INSTITUTE (ARI)

ARI 410	(2001; Addendum 2002) Forced-Circulation Air-Cooling and Air-Heating Coils

AMERICAN SOCIETY OF HEATING, REFRIGERATING AND AIR-CONDITIONING ENGINEERS (ASHRAE)

ASHRAE 15	(2001; Errata 2002) Safety Standard for Refrigeration Systems
ASHRAE 52.1	(1992) Gravimetric and Dust-Spot Procedures for Testing Air-Cleaning Devices Used in General Ventilation for Removing Particulate Matter
ASHRAE 90.1	(2001; various Errata) Energy Standard for Buildings Except Low-Rise Residential Buildings

ASME INTERNATIONAL (ASME)

ASME B16.22	(2002) Wrought Copper and Copper Alloy Solder Joint Pressure Fittings
ASME B16.26	(1988) Cast Copper Alloy Fittings for Flared Copper Tubes
ASME B31.1	(2004) Power Piping
ASME B31.5	(2001) Refrigeration Piping and Heat Transfer Components

ASTM INTERNATIONAL (ASTM)

ASTM B 280	(2003) Seamless Copper Tube for Air Conditioning and Refrigeration Field Service

ETL TESTING LABORATORIES (ETL)

ETL DLP	(updated continuously) Directory of ETL Listed Products

NATIONAL FIRE PROTECTION ASSOCIATION (NFPA)

NFPA 70	(2005) National Electrical Code
NFPA 90A	(2002) Installation of Air Conditioning and Ventilating Systems

UNDERWRITERS LABORATORIES (UL)

UL Elec Equip Dir	(2003) Electrical Appliance and Utilization Equipment Directory

1.2 SYSTEM DESCRIPTION

Provide new computer room air conditioning units (CRACU) complete and ready for operation.

1.3 SUBMITTALS

Government approval is required for submittals with a "G" designation; submittals not having a "G" designation are for information only. When used, a designation following the "G" designation identifies the office that will review the submittal for the Government. Submit the following in accordance with Section 01330 SUBMITTAL PROCEDURES:

SD-03 Product Data

Computer room air conditioning units

SD-06 Test Reports

CRACU production schedule and factory test schedule

Manufacturer's factory test plans

Factory test reports

Field test schedule

Manufacturer's field test plans

Field test reports

SD-08 Manufacturer's Instructions

Installation manual for each type of CRACU

SD-10 Operation and Maintenance Data

Computer room air conditioning units

1.4 OZONE DEPLETION FACTOR

Equipment using refrigerants R-11, R-12, R-113, R-114, R-115, R-500, or refrigerants with ozone depletion factor (ODF) greater than 0.05 or refrigerants containing CFC or Halon shall not be permitted.

PART 2 PRODUCTS

2.1 COMPUTER ROOM AIR CONDITIONING UNITS (CRACU)

ASHRAE 15. Provide self-contained units, designed, and factory assembled, and factory tested. Unit shall be listed in UL Elec Equip Dir or ETL DLPfor computer room application. Equipment shall be in accordance with ASHRAE 90.1 at a minimum. Unit shall include room cabinet and frame, fan section, filter section, cooling coil, reheat coil, compressors, condensers, controls, and, interconnecting piping internal to the CRACU.

2.1.1 Cabinet and Frame

2.1.1.1 Unit Cabinet

Unit frame shall be minimum 2.0 millimeter welded steel tubes or steel angles and shall be mill-galvanized or coated with an epoxy finish, or an approved manufacturer's standard finish, if equivalent.

Exterior panels shall be furniture grade steel sheet, minimum of 1.0 mm, mill-galvanized or coated with a corrosion-inhibiting epoxy finish, or an approved equivalent finish. Mill galvanized sheet metal shall be coated with not less than 380 gram of zinc per square meter of two-sided surface. Mill rolled structural steel shall be hot-dip galvanized or primed and painted. Cut edges, burns and scratches in hot-dip galvanized surfaces shall be coated with galvanizing repair coating.

Provide removable panel for access to controls without interrupting airflow. Panels shall be gasketed to prevent air leakage under system operating pressure and shall be removable for service access without the use of special tools. Condensate pans shall be minimum 1.0 millimeter Type 304 stainless steel and shall be piped to drain.

Exterior surfaces of cabinets constructed of mill-galvanized steel shall be finished by the manufacturer's standard enamel finish in color as selected by Contracting Officer.

> Items where color, pattern, or fabric are be selected by Contracting Officer from manufacturer's full range shall have choices submitted to Contracting Officer simultaneously with other items requiring finish selection.

CRACU manufacturer's standard cabinet materials and finishes will be acceptable if considered equivalent to the above requirements by the Contracting Officer.

2.1.1.2 Cabinet Interiors Sound Attenuation

Provide a factory-installed sound attenuation system in the interior of the CRACU cabinet.

CRACU cabinet panels interior shall be provided with 25 millimeters of 24 kilogram per cubic meter neoprene-coated fiber glass insulation on interior of cabinet panels. Insulation shall be applied to the cabinet panels with 100 percent adhesive coverage and both the insulation and the adhesive shall conform to NFPA 90A.

Compressors located in CRACU interior cabinets shall be either wrapped in a sound absorbing insulating blanket or enclosed in it's own sound absorbing

insulated mini-cabinet inside of the larger CRACU interior cabinet.

Fans and compressors located in the CRACU interior cabinet shall be provided with vibration isolators between their respective support frames and the cabinet framing.

CRACU manufacturer's standard interior cabinet sound attenuation materials and finishes will be acceptable if considered equivalent to the above requirements by the Contracting Officer.

2.1.2 Fan Section

Fans which force air through coils into the conditioned space shall have belt drives and adjustable sheaves sized to ensure achievement of design air flow by field adjustments. Fan system design shall be such that design air flow shall be achieved at the midpoint of sheave adjustment.

The supply air fan shall be AMCA certified, double-inlet/double-width, and equipped with forward-curved blades wheel. The supply air fan shall be statically and dynamically balanced and equipped with V-belt drive. The fan shall have self-aligning, permanently lubricated ball bearings with a minimum life span of 100,000 hours.

Provide V-belt drive sized for 200 percent of the motor nameplate rating. Fan speed shall be adjustable with cast iron variable pitch pulleys. Sheaves shall be within the middle one third of the sheave adjustment range.

The fan motor shall be drip-proof with NEMA rated frame, inherent overload protection, and sliding adjustable motor base. The maximum vibrations shall not exceed 2 mils (0.05 mm) in any plane.

2.1.3 Cooling Coil

Provide ARI 410 coils and slope for drainage. Coil shall be constructed of seamless copper tubes with plate aluminum fins. Each coil, in the production process, shall be individually tested at 2200 kPa with compressed air under water and verified to be air tight. Provide DX coil complete with a distributor and thermostatic expansion valve with external equalizer. Provide condensate drain pan of stainless steel construction with nonferrous connections and internal trap, and a condensate pump system complete with integral pump discharge check valve, integral float switch, reservoir, and pump and motor assembly.

2.1.4 Filters

Provide UL listed 50 mm thick deep pleated fiberglass throwaway type filters. Efficiency of filter bank shall be a minimum of 30 percent efficiency based on ASHRAE 52.1 requirements. Provide one complete spare filter bank set for installation prior to final acceptance testing covered in Part 3 of this section.

2.1.5 Reheat Coil

Provide electric reheat coils with low watts density. The electric reheat coils shall be enclosed in 304 stainless steel tubes and 304 stainless steel fins. Provide modulating control of the electric reheat coils by multiple stages. Provide UL or ETL listed safety switches to protect system from overheating.

2.1.6 Refrigeration System

Provide compressors complete with vibration isolation, suction and discharge service valves, high and low pressure safety switches, and built-in overload protection. Provide refrigeration circuits including hot gas mufflers, liquid-line filter-drier, refrigerant sight glass and moisture indicator, externally equalized expansion valve, and liquid-line solenoid valve factory connected with refrigeration copper tubing. Crankcase heaters are required. Provide hot gas bypass.

2.1.6.1 Compressors

Provide single or dual, hermetic or semi-hermetic or scroll compressors. If dual compressors are provided, the refrigeration system shall be equipped with two independent refrigeration circuits.

2.1.6.2 Refrigerant Tubing

Field-installed refrigerant tubing for split systems shall be ASTM B 280, cleaned, dehydrated, and sealed. Further, provide ASME B16.22 solder joint refrigerant fittings and adapters with silver brazing alloy solder and silver brazing alloy flux. During brazing operations bleed a small amount of dry oil-free nitrogen continuously through the refrigerant tubing. If required for connections to equipment, provide ASME B16.26 flared fittings.

2.1.7 Condenser

Provide condenser circuit pre-piped with start-up and head pressure controls to maintain system operation at ambient temperatures down to 10 degrees C.

2.1.7.1 Air-cooled Condenser

Provide remote air-cooled condenser arranged for vertical air discharge. The direct-driven propeller fans shall have factory balanced aluminum blades and shall be equipped with fan guards. The coils shall be constructed from seamless copper tubes with plate type aluminum fins. The coils, in the production process, shall be pressure tested with compressed air 2068 kPa under water and verified to be leak-free. The air-cooled condensers casings and other components shall be suitable for outdoor location and constructed from aluminum with manufacturer's standard corrosion-resistant finish,or galvanized steel. An integral factory wired and tested control panel shall be provided for the condenser.

2.1.8 Space Temperature Control System

Provide microprocessor control system integral with unit including electronic control center, control valves, sensors, wiring, and other appurtenances for workable system. Provide access panel or door in front of unit.

Isolate electronic control center from conditioned airstream to allow service while system is in operation. Provide control sensors in unit for cooling, dehumidifying, and reheating. High-voltage circuits in system shall have individual leg overload protection. Starters, contactors, and relays shall be controlled by 24 volt control circuit.

High-voltage circuit components shall be protected by safety lock, dead-front panel. Mount nonautomatic, molded-case circuit breaker in

high-voltage section of electrical panel. Operating mechanism shall prevent access to high-voltage electrical components until switched to "OFF" position.

2.1.9 Air Return and Delivery Orientation

Computer room air conditioning units shall be upflow discharge, front return,draw-thru cooling coil, and shall be fitted with collars for top supply duct connections. Upflow discharge shall discharge air with a acoustical lined sweep or acoustically-lined multiple turning vane elbows provided to direct the flow of air away from the back of the unit. Supply (discharge air) ducting from the upflow units shall be off of each blower discharge outlet, that is, one duct and duct collar per blower. Provide acoustical lining on the interior of the supply air devices in compliance with with requirements specified hereinafter in paragraph "Cabinet Interiors Sound Attenuation". Provide a factory fabricated discharge plenum with minimum two adjustable supply registers.

2.2 ELECTRICAL

2.2.1 Electrical Motors, Controllers, Contactors, and Disconnects

Furnish with respective pieces of equipment. Motors, controllers, contactors, and disconnects shall conform to Section 16402 INTERIOR DISTRIBUTION SYSTEM, as modified and supplemented by this section. Provide electrical connections under Section 16402 INTERIOR DISTRIBUTION SYSTEM. Provide controllers and contactors with maximum of 120-volt control circuits, and auxiliary contacts for use with controls furnished. When motors and equipment furnished are larger than sizes indicated, the cost of providing additional electrical service and related work shall be included under this section.

2.2.2 Electrical Control Wiring

Provide control wiring under this section in accordance with NFPA 70 and Section 16402 INTERIOR DISTRIBUTION SYSTEM. Provide Space temperature control system drawings which include point-to-point electrical wiring diagrams.

2.3 FIRE PROTECTION DEVICES

CRACU's shall have a factory installed duct smoke detector that shall de-energize the unit when unsafe smoke conditions occur in the unit discharge.

2.4 SOURCE QUALITY CONTROL

Provide factory test plans, factory test schedules, factory tests and factory test reports on each of the CRACUs.

2.4.1 Manufacturer's Factory Test Plans

For each CRACU, submit a factory test plan which when followed during factory testing shall verify that the performance scheduled on the drawings is met by the produced CRACU models.

The manufacturer shall perform factory tests on the actual CRACUs produced for this project. The test reports shall document the performance tests conducted on the factory assembled computer room air conditioning units.

Performance testing on the individual computer room air conditioning unit components, not factory assembled, is not acceptable.

Submit the required test plans for review and approval to the Contracting Officer at least 90 calendar days before scheduled factory test date.

2.4.1.1 Test Procedure

Indicate in each test plan the factory acceptance test procedures. Procedures shall be structured to test all modes of operation to confirm that the controls through all modes of control to confirm that the controls are performing in accordance with the intended sequence of control.

Controllers shall be verified to be properly calibrated and have the proper set point to provide stable control of their respective equipment.

Include in each test plan a detailed step-by-step procedure for testing automatic controls provided by the manufacturer.

2.4.1.2 Performance Variables

Each test plan shall list performance variables that are required to be measured or tested as part of the field test. Include in the listed performance indicated on the equipment schedules on the contract design drawings.

Manufacturer shall furnish with each test procedure a description of acceptable performance results that shall be verified. Manufacturer shall identify the acceptable limits or tolerances within which each tested performance variable shall acceptably operate.

2.4.1.3 Test Configuration

Plans shall indicate that tests are to be performed for a minimum of four continuous hours in a wet coil condition. If test period is interrupted, the four hour test period shall be started over. Each test plan shall be job specific and shall address the particular CRACUs and particular conditions which exist with this contract. Generic or general preprinted test procedures are not acceptable. Tests shall include a top air discharge configuration.

2.4.1.4 Tested Variables

Plans shall provide for air side testing which includes verification of the airflow, total static pressure; fan drive motor KW, amperage and RPM; and fan RPM. Provide entering air temperatures equal to those indicated on the CRACU schedules.

2.4.1.5 Thermal Testing

hermal testing shall verify CRACU heating, sensible cooling, total cooling, and humidifying performance scheduled on the contract drawings.

2.4.1.6 Specialized Components

Include procedures for field testing and field adjusting specialized components, such as hot gas bypass control valves, or pressure valves.

2.4.1.7 Factory Tests Reporting Forms

Each test plan shall include the required test reporting forms to be completed by the Contractor's testing representatives. Submit factory test reports, referencing each tested CRACU serial number, and receive approval before delivery of CRACU to the project site.

2.4.2 CRACU Production Schedule and Factory Test Schedule

The Government reserves the right to witness factory tests.

Provide the CRACU production schedule and factory test schedule for tests to be performed at the manufacturer's test facility. Submit planned production schedule, and factory test schedule and test location, to the Contracting Officer as soon as it is scheduled but not less than 60 calendar days prior to the scheduled factory test date. Track this schedule through the production phases and if a scheduled factory test date changes, give advanced notice to Contracting Officer as soon as possible but at least 15 calendar days in advance of the scheduled test dates.

2.4.3 Factory Tests

Conduct the factory testing in compliance with the Contracting Officer approved manufacturer's field test plan, and in accordance with additional field testing requirements specified herein. Record the required data using the test reporting forms approved of the approved field test plan. Conduct the test for each CRACU for the continuous test period in the approved test plan. A CRACU shutdown before the continuous test period is completed shall result in the test period being started again and run for the required duration.

2.4.4 Deficiency Resolution

The test requirements shall be acceptably met; deficiencies identified during the tests shall be corrected in compliance with the manufacturer's recommendations and corrections tested as specified in the paragraph "Factory Test Plans".

2.4.5 Factory Test Reports

Use the test reporting forms approved in the factory test plan. Final test report forms shall be typed including data entries and remarks. Completed test report forms for each CRACU shall be reviewed, approved, and signed by the Manufacturer's test director.

PART 3 EXECUTION

3.1 INSTALLATION

3.1.1 CRACU System

Installation of each CRACU system including equipment, materials, installation, workmanship, fabrication, assembly, erection, examination, inspection, and testing, shall be in accordance with ASME B31.1, ASME B31.5, NFPA 70, as modified and supplemented by the requirements of this section and the CRACU manufacturer's recommendations.

3.1.2 Installation Instructions

Provide a manufacturer's installation manual for each type of CRACU.

3.2 FIELD QUALITY CONTROL

Upon completion and before final acceptance of work, test each CRACU subsystem in service to demonstrate compliance with the contract requirements, including field testing specified below. Adjust controls and balance systems prior to final acceptance of completed systems. Test controls through every cycle of operation. Test safety controls to demonstrate performance of required function. Correct defects in work provided by Contractor and repeat tests. Furnish steam, fuel, water, electricity, instruments, connecting devices, and personnel for tests. Flush and clean piping before placing in operation. Clean equipment, piping, strainers, and ducts. Prior to commencement of field testing, remove all filters and provide new filters.

3.3 FIELD TESTING

Provide field test plans, field test schedules, field tests and field test reports on each of the CRACUs. Field test each CRACU for Contracting Officer acceptance in accordance with the CRACU manufacturer's approved field test plan.

3.3.1 Manufacturer's Field Test Plans

Submit field test plans developed by the manufacturer for each CRACU; submit the field test plans along with the factory test plans specified herein before. Field test plans developed by the installing Contractor, or the equipment sales agency furnishing the CRACU, will not be acceptable.

The Contracting Officer will review and approve the field test plan for each of the listed CRACU's prior to commencement of field testing of the equipment. The approved field test plans shall be followed for the field tests of the CRACU and test reporting.

3.3.1.1 Coordinated Testing

Indicate in each field test plan when work required by this section requires coordination with test work required by other specification sections. Furnish test procedures for the simultaneous or integrated testing of: CRACU controls which interlock and interface with controls factory prewired.

3.3.1.2 Prerequisite Testing

Each CRACU for which performance testing is dependent upon the completion of the work covered by Section 15950 HVAC TESTING/ADJUSTING/BALANCING must have that work completed as a prerequisite to testing work under this section. Indicate in each field test plan when such prerequisite work is required.

3.3.1.3 Test Procedure

Indicate in each field test plan the CRACU manufacturer's published start-up, and field acceptance test procedures. Include in each test plan a detailed step-by-step procedure for testing automatic controls provided by the manufacturer.

Procedures shall be structured to test the controls through all modes of control to confirm that the controls are performing with the intended sequence of control.

Controllers shall be verified to be properly calibrated and have the proper set point to provide stable control of their respective equipment.

3.3.1.4 Performance Variables

Each test plan shall list performance variables that are required to be measured or tested as part of the field test.

Include, in the listed performance variables, requirements indicated on the CRACU schedules on the design drawings. Manufacturer shall furnish, with each test procedure, a description of acceptable results that have been verified.

Manufacturer shall identify the acceptable limits or tolerances within which each tested performance variable shall acceptably operate.

3.3.1.5 Test Configuration

Plans shall indicate that tests are to be performed for a minimum of four continuous hours in a wet coil condition. If test period is interrupted, the four hour test period shall be started over. Each test plan shall be job specific and shall address the particular CRACUs and particular conditions which exist with this contract. Generic or general preprinted test procedures are not acceptable.

3.3.1.6 Tested Variables

Plans shall provide for air side testing which includes verification of the airflow, total static pressure; fan drive motor KW, amperage and RPM; and fan RPM. Provide entering air temperatures equal to those indicated on the CRACU schedules.

3.3.1.7 Thermal Testing

Plans shall provide thermal testing utilizing temperatures equal to those indicated on the CRACU schedules. Thermal testing shall verify CRACU heating, sensible cooling, total cooling, and humidifying performance scheduled on the contract drawings.

3.3.1.8 Specialized Components

Include procedures for field testing and field adjusting specialized components, such as hot gas bypass control valves, or pressure valves.

3.3.1.9 Field Test Reporting Forms

Each test plan shall include the required test reporting forms to be completed by the Contractor's testing representatives.

3.3.2 Field Test Schedule

Notify the Contracting Officer in writing at least 30 calendar days prior to the testing. Within 30 calendar days after acceptable completion of testing, submit each test report for the review and approval of the

Contracting Officer.

3.3.3 Manufacturer's Test Representative

Furnish a factory trained field test representative authorized by the CRACU manufacturer to oversee the complete execution of the field testing. This test representative shall also review, approve, and sign the completed field test report. Signatures shall be accompanied by the person's name typed.

Submit credentials of the manufacturer's field test representative proposed, including current telephone number, to the Contracting Officer for review and approval. Submit these credentials with the written advance notice of the field tests

3.3.4 Field Tests

Conduct the field testing in compliance with the Contracting Officer approved manufacturer's field test plan, and in accordance with additional field testing requirements specified herein. Record the required data using the test reporting forms approved of the approved field test plan. Conduct the test for each CRACU for a continuous 24-hour test period. A CRACU shutdown before the continuous 24-hour test period is completed shall result in the 24-hour test period being started again and run for the required duration.

3.3.5 Deficiency Resolution

The test requirements shall be acceptably met; deficiencies identified during the tests shall be corrected in compliance with the manufacturer's recommendations. Corrections shall be tested again in compliance with the requirements specified in the paragraph "Field Test Plans".

3.3.6 Field Test Reports

Use the test reporting forms approved in the field test plan. Final test report forms shall be typed, including data entries and remarks. Completed test report forms for each CRACU shall be reviewed, approved, and signed by the Contractor's test director and the QC manager.

-- End of Section --

SECTION 15768

ELECTRIC SPACE HEATING EQUIPMENT

PART 1 GENERAL

1.1 REFERENCES

The publications listed below form a part of this specification to the extent referenced. The publications are referred to in the text by the basic designation only.Unless otherwise specified or indicated, electrical and electronics terms used in these specifications and on the Drawings, shall also be defined in DIN, I.E.C., BS or EN standards.

NATIONAL FIRE PROTECTION ASSOCIATION (NFPA)

NFPA 70	(2005) National Electrical Code

UNDERWRITERS LABORATORIES (UL)

UL 1025	(1980; R 1990, Bul. 1991) Electric Air Heaters
UL 1042	(1994; Rev Mar 2004) Electric Baseboard Heating Equipment

1.2 GENERAL REQUIREMENTS

Section 16050, "Basic Electrical Materials and Methods," applies to this section, with the additions and modifications specified herein.

1.3 SUBMITTALS

Government approval is required for submittals with a "G" designation; submittals not having a "G" designation are for information only. When used, a designation following the "G" designation identifies the office that will review the submittal for the Government. Submit the following in accordance with Section 01330 SUBMITTAL PROCEDURES:

SD-03 Product Data

Electric unit heaters

Electric baseboard units

Thermostat

Unit thermostat

PART 2 PRODUCTS

2.1 ELECTRIC UNIT HEATERS

UL 1025; wattage, voltage, phase, number of steps, watts and cubic meter per second as indicated on Drawings. Provide control-circuit terminals and single source of power supply. Heaters 3 KW and larger shall be 3-phase, with load balanced on each of the three phases. Limit leaving air

temperature to 60 degrees C with entering air of 15 degrees C.

All electric unit heaters shall be heavy duty, commercial units permenantly fixed in place.

2.1.1 Enclosure

Minimum 20 gage steel.

2.1.2 Heating Element

Nickel chromium heating wire element, free from expansion noise and 60 Hz hum. Embed element in magnesium-oxide insulating refractory. Seal element in high-mass steel or corrosion-resisting metallic sheath with fins. Enclose element ends in terminal box. Provide not more than six fins per 25 mm. Limit fin surface temperature 285 degrees C at any point during normal operation.

2.1.3 Controls

Include limit controls for overheat protection of heaters. For remote thermostatic operation. Provide contactor rated for 100,000 duty cycles.

2.1.4 Wiring

Completely factory-prewired to terminal strips, ready to receive branch circuit and control connections for 60 degrees C copper wiring.

2.1.5 Thermostat

Provide tamper resistant integral thermostat, adjustable without requiring removal of heater components. Thermostat operating range shall be approximately 10 degrees C to a maximum of 24 degrees C with operating differential of 0.5 degrees C or less.

2.1.6 Disconnect Means

Provide factory-installed safety disconnect switch in the housing or in an auxiliary matching control section with "off" position marking on the face plate.

2.2 ELECTRIC BASEBOARD UNITS

UL 1042; wattage, voltage, phase, heat in watts output indicated. Provide units complete with heating elements, mounting brackets, end closures, splice plates, interior and exterior corners and accessible wiring compartment. Limit outlet air temperature and enclosure surfaces to 93 degrees C under continuous operating conditions.

All electric baseboard heaters shall be heavy duty, commercial units permenantly fixed in place.

2.2.1 Enclosure

Fabricate from steel not less than 18 gage. Provide manufacturer's standard finish. Locate terminal blocks for branch circuit conductor and control wiring connections as required. Wiring shall conform to NFPA 70.

2.2.2 Accessories

Where continuous wall-to-wall installations are indicated, provide accessories; including corner fittings, fillers, splice plates, and end caps. Accessories shall have the same profile as the basic unit, and contain no sharp edges.

2.2.3 Limit Control

Provide thermal overload protection.

2.2.4 Disconnect Means

Provide factory-installed safety disconnect switch in the housing or in an auxiliary matching control section with "off" position marking on the face plate.

2.2.5 Unit Thermostat

Provide tamper resistant integral tool adjustable thermostat, without requiring removal of cabinet parts. Thermostat, operating range shall be approximately 10 degrees C to a maximum of 24 degrees C with operating differential of 0.5 degrees C or less.

PART 3 EXECUTION

3.1 INSTALLATION

Install in conformance with the manufacturer's instructions and approved heater installation drawing, with necessary clearances for air circulation, maintenance, inspection, service testing and repair. Connect to electrical supply in accordance with Section 16402, "Interior Distribution System."

3.1.1 Unit Heaters

Mount units plumb, square and level with ceiling and walls.

3.1.2 Baseboard Heaters

Verify manufacturer's clearance requirements from electrical cords, drapes, and other furnishings.

3.2 FIELD QUALITY CONTROL

Provide necessary personnel, instruments, and equipment to perform tests. Notify the Government 5 working days prior to scheduled testings and locations.

3.2.1 Field Inspection

Prior to initial operation, inspect installed equipment for conformance with drawings and specifications.

3.2.2 Insulation Resistance Tests

Test 600-volt wiring to verify that no short circuits or grounds exist. Tests shall be made using an instrument which applies a voltage of approximately 500 volts and provides a direct reading of resistance in ohms.

3.2.3 Operational Tests

Test equipment circuits and devices to demonstrate proper operation. Test each item of control equipment not less than 5 times.

-- End of Section --

SECTION 15835

CEILING FANS

PART 1 GENERAL

1.1 REFERENCES

The publications listed below form a part of this section to the extent referenced. The publications are referred to within the text by the basic designation only.

NATIONAL FIRE PROTECTION ASSOCIATION (NFPA)

NFPA 70 (2005) National Electrical Code

1.2 SUBMITTALS

Government approval is required for submittals with a "G" designation; submittals not having a "G" designation are for information only. When used, a designation following the "G" designation identifies the office that will review the submittal for the Government. Submit the following in accordance with Section 01330 SUBMITTAL PROCEDURES:

SD-03 Product Data

Ceiling Fans

Manufacturer's descriptive data, catalog cuts, and installation instructions.

SD-10 Operation and Maintenance Data

Ceiling Fans

Operation and Maintenance Manuals shall be as required in Section 01060: SPECIAL CLAUSE entitled OPERATION AND MAINTENANCE (O&M) DATA FOR EQUIPMENT AND SYSTEMS.

PART 2 PRODUCTS

2.1 INDUSTRIAL CEILING FANS

2.1.1 General

Commercial-type ceiling fan. Residential-type fans are not acceptable. Install reversible type Fans in barrack areas, one and two man bedrooms, dining rooms, supply and storage areas and classrooms and offices.

2.1.2 Construction

Downrod: Heavy-duty steel; 19 mm (3/4-inch) diameter; length as required for mounting height clearance indicated.

Blades:

a. Number: Three
b. Material: Steel.

2.1.3 Electrical

Volts: 220, 50 hertz.

2.1.4 Fan Drives

Direct.

2.1.5 Motors

Three-speed, continuous duty, totally enclosed, cast metal yoke and housing.

2.1.6 Controls

Wall-mounted; rotary or slide.

2.2 FACTORY FINISHES

Manufacturer's standard paint applied to factory-assembled and -tested ceiling fans before shipping.

2.2.1 Color

White.

2.3 ELECTRICAL

Provide wiring under this section in accordance with NFPA 70 and Section 16402 INTERIOR DISTRIBUTION SYSTEM.

PART 3 EXECUTION

3.1 EXAMINATION

Examine areas and conditions, with Installer present, for compliance with requirements for conditions affecting performance of work.

Verify minimum clearances with adjacent and surrounding construction.

Examine support structure and roughing-in for electrical power and control systems to verify actual locations of attachment and connections before ceiling fans installation.

Examine ceilings for suitable conditions where ceiling fans will be installed.

Proceed with installation only after unsatisfactory conditions have been corrected.

3.2 INSTALLATION

Install ceiling fans at locations indicated to comply with ceiling fans manufacturer's written instructions.

Install ceiling fans in position and in relation to adjoining construction indicated. Securely anchor to supporting substrate in a manner that

produces a smoothly operating ceiling fan without shaking, wobbling or similar movement, and noise-free operation. Downrod shall be vertically plumb and ceiling fan blades horizontally flat.

Install controls according to manufacturer's written instructions.

Test ceiling fan units to verify that controls, switches, and other operating components are in optimum functioning condition.

3.3 ADJUSTING

Adjust ceiling fans and balance ceiling fan blades to operate smoothly, safely, and free from shake, wobble, or malfunction at all operational speeds.

3.4 CLEANING AND PROTECTION

Clean ceiling fans after installation, according to manufacturer's written instructions.

Provide final protection and maintain conditions, in a manner acceptable to manufacturer and Installer, that ensure that ceiling fans are without damage or deterioration at time of Substantial Completion.

Use type of covering approved by ceiling fan manufacturer that will effectively protect ceiling fans from dirt, dust, debris, and field-applied paint or coating overspray, or similar damage.

Replace damaged ceiling fans that cannot be repaired, in a manner approved by Architect, before time of Substantial Completion.

3.5 FIELD QUALITY CONTROL

3.5.1 Startup Checks

Verify that ceiling fans are secure to mountings and supporting devices and that connections to electrical power and control systems are complete.

Verify that adjusting is complete.

3.5.2 Operational Test

After electrical circuitry has been energized, start ceiling fans to confirm proper motor rotation and unit operation. Remove malfunctioning units, replace with new units, and retest.

3.5.3 Test and Adjust

Test and adjust controls. Replace damaged and malfunctioning controls and ceiling fans.

-- End of Section --

SECTION 15895

AIR SUPPLY, DISTRIBUTION, VENTILATION, AND EXHAUST SYSTEM

PART 1 GENERAL

1.1 REFERENCES

The publications listed below form a part of this specification to the extent referenced. The publications are referred to within the text by the basic designation only.

AIR-CONDITIONING AND REFRIGERATION INSTITUTE (ARI)

ARI 260	(2001) Sound Rating of Ducted Air Moving and Conditioning Equipment
ARI 430	(1999) Central-Station Air-Handling Units

AIR MOVEMENT AND CONTROL ASSOCIATION INTERNATIONAL(AMCA)

AMCA 210	(1999) Laboratory Methods of Testing Fans for Aerodynamic Performance Rating
AMCA 300	(1996) Reverberant Room Method for Sound Testing of Fans

ASTM INTERNATIONAL (ASTM)

ASTM A 53/A 53M	(2004a) Pipe, Steel, Black and Hot-Dipped, Zinc-Coated, Welded and Seamless
ASTM A 123/A 123M	(2002) Zinc (Hot-Dip Galvanized) Coatings on Iron and Steel Products
ASTM A 167	(2004) Stainless and Heat-Resisting Chromium-Nickel Steel Plate, Sheet, and Strip
ASTM A 924/A 924M	(2004) General Requirements for Steel Sheet, Metallic-Coated by the Hot-Dip Process
ASTM B 280	(2003) Seamless Copper Tube for Air Conditioning and Refrigeration Field Service
ASTM B 117	(2002) Operating Salt Spray (Fog) Apparatus
ASTM B 813	(2000e1) Liquid and Paste Fluxes for Soldering of Copper and Copper Alloy Tube
ASTM D 520	(2000) Zinc Dust Pigment

ASTM D 1654	(1992; R 2000) Evaluation of Painted or Coated Specimens Subjected to Corrosive Environments
ASTM D 3359	(2002) Measuring Adhesion by Tape Test
ASTM F 872	(1984; R 1990) Filter Units, Air Conditioning: Viscous-Impingement Type, Cleanable

AMERICAN SOCIETY OF HEATING, REFRIGERATING AND AIR-CONDITIONING ENGINEERS (ASHRAE)

ASHRAE 52.1	(1992) Gravimetric and Dust-Spot Procedures for Testing Air-Cleaning Devices Used in General Ventilation for Removing Particulate Matter
ASHRAE 68	(1997) Laboratory Method of Testing to Determine the Sound Power in a Duct
ASHRAE 70	(1991) Method of Testing for Rating the Performance of Air Outlets and Inlets

ASME INTERNATIONAL (ASME)

ASME B31.1	(2004) Power Piping

DUETSCHES INSTITUTE FUR NORMUNG (DIN)

DIN 24163-1	(1985) Fans; performance testing, standard characteristics
DIN 24163-2	(1985) Fans; performance testing, standardized test airways
DIN 24163-3	(1985) Fans; performance testing of small fans using standardized test airways

MANUFACTURERS STANDARDIZATION SOCIETY OF THE VALVE AND FITTINGS INDUSTRY (MSS)

MSS SP-58	(2002) Pipe Hangers and Supports - Materials, Design and Manufacture
MSS SP-69	(2002) Pipe Hangers and Supports - Selection and Application

NATIONAL ELECTRICAL MANUFACTURERS ASSOCIATION (NEMA)

NEMA MG 1	(2003; R 2004) Motors and Generators

NATIONAL FIRE PROTECTION ASSOCIATION (NFPA)

NFPA 90A	(2002) Installation of Air Conditioning and Ventilating Systems
NFPA 96	(2001) Ventilation Control and Fire Protection of Commercial Cooking Operations

SHEET METAL AND AIR CONDITIONING CONTRACTORS' NATIONAL ASSOCIATION (SMACNA)

SMACNA HVAC Duct Const Stds	(1995, 2nd Ed) HVAC Duct Construction Standards - Metal and Flexible
SMACNA Install Fire Damp HVAC	(2002, 5th Ed) Fire, Smoke and Radiation Damper Installation Guide for HVAC Systems

UNDERWRITERS LABORATORIES (UL)

UL 214	(1997; Rev thru Aug 2001) Tests for Flame-Propagation of Fabrics and Films
UL 555	(1999; Rev thru Jan 2002) Fire Dampers
UL 705	(2004) Power Ventilators
UL Bld Mat Dir	(2004) Building Materials Directory
UL Elec Const Dir	(2003) Electrical Construction Equipment Directory
UL Fire Resist Dir	(2004) Fire Resistance Directory

1.2 COORDINATION OF TRADES

Ductwork, piping offsets, fittings, and accessories shall be furnished as required to provide a complete installation and to eliminate interference with other construction.

1.3 DELIVERY AND STORAGE

Equipment delivered and placed in storage shall be stored with protection from the weather, humidity and temperature variations, dirt and dust, or other contaminants. Additionally, all pipes shall either be capped or plugged until installed.

1.4 FIELD MEASUREMENTS

After becoming familiar with all details of the work, the Contractor shall verify all dimensions in the field, and shall advise the Government of any discrepancy before performing the work.

1.5 SUBMITTALS

Government approval is required for submittals with a "G" designation; submittals not having a "G" designation are for information only. When used, a designation following the "G" designation identifies the office that will review the submittal for the Government. Submit the following in accordance with Section 01330 SUBMITTAL PROCEDURES

SD-03 Product Data

Components and Equipment

Manufacturer's catalog data included with the detail drawings for the following items. The data shall be highlighted to show

model, size, options, etc., that are intended for consideration. Data shall be adequate to demonstrate compliance with contract requirements for the following:

a. Piping Components

b. Ductwork Components

c. Air Systems Equipment

d. Air Handling Units

Diagrams

Proposed diagrams, at least 2 weeks prior to start of related testing. System diagrams that show the layout of equipment, piping, and ductwork, and typed condensed operation manuals explaining preventative maintenance procedures, methods of checking the system for normal, safe operation, and procedures for safely starting and stopping the system shall be framed under glass or laminated plastic. After approval, these items shall be posted where directed.

Manufacturer's experience

Statement demonstrating successful completion of similar services on at least 5 projects of similar size and scope, at least 2 weeks prior to submittal of other items required by this section.

SD-06 Test Reports

Test Procedures Schedule

Proposed test procedures for piping hydrostatic test, ductwork leak test, and performance tests of systems, at least 2 weeks prior to the start of related testing.

Performance Tests Schedule

Proposed test schedules for hydrostatic test of piping, ductwork leak test, and performance tests, at least 2 weeks prior to the start of related testing.

Performance Tests

Testing, Adjusting, and Balancing

Test reports for the piping hydrostatic test, ductwork leak test, and performance tests in booklet form, upon completion of testing. Reports shall document phases of tests performed including initial test summary, repairs/adjustments made, and final test results.

SD-10 Operation and Maintenance Data

Operating and Maintenance Instructions

Provide manuals listing step-by-step procedures required for

system startup, operation, shutdown, and routine maintenance, at least 2 weeks prior to field training. The manuals shall include the manufacturer's name, model number, parts list, list of parts and tools that should be kept in stock by the Government for routine maintenance including the name of a local supplier, simplified wiring and controls diagrams, and troubleshooting guide.

Operation and Maintenance Manuals shall be as required in Section 01060: SPECIAL CLAUSE entitled OPERATION AND MAINTENANCE (O&M) DATA FOR EQUIPMENT AND SYSTEMS, and include the additional requirements as specified hereinafter. In the event of a conflict, the more detailed requirement shall apply.

PART 2 PRODUCTS

2.1 STANDARD PRODUCTS

Components and equipment shall be standard products of a manufacturer regularly engaged in the manufacturing of products that are of a similar material, design and workmanship. The standard products shall have been in satisfactory commercial or industrial use for 2 years before bid opening. Manufacturer's experience shall be minimum 2 years and shall include applications of components and equipment under similar circumstances and of similar size. The 2 years must be satisfactorily completed by a product which has been sold or is offered for sale on the commercial market through advertisements, manufacturers' catalogs, or brochures. Products having less than a 2-year field service record will be acceptable if a certified record of satisfactory field operation, for not less than 6000 hours exclusive of the manufacturer's factory tests, can be shown. The equipment items shall be supported by a service organization.

2.2 ASBESTOS PROHIBITION

Asbestos and asbestos-containing products shall not be used.

2.3 NAMEPLATES

Equipment shall have a nameplate installed by the manufacturer that identifies the manufacturer's name, address, type or style, model or serial number, and catalog number.

2.4 EQUIPMENT GUARDS AND ACCESS

Belts, pulleys, chains, gears, couplings, projecting setscrews, keys, and other rotating parts exposed to personnel contact shall be fully enclosed or guarded according to OSHA requirements. High temperature equipment and piping exposed to contact by personnel or where it creates a potential fire hazard shall be properly guarded or covered with insulation of a type specified. Operating platforms, ladders, and guardrails shall be provided where shown and shall be constructed as indicated on Drawings.

2.5 PIPING COMPONENTS

2.5.1 Escutcheons

Escutcheons shall be chromium-plated iron or chromium-plated brass, either one piece or split pattern, held in place by internal spring tension or setscrews.

2.5.2 Pipe Hangers, Inserts, and Supports

Pipe hangers, inserts, and supports shall conform to MSS SP-58 and MSS SP-69.

2.5.3 Insulation

Shop and field applied insulation shall be as specified in Section 15080 THERMAL INSULATION FOR MECHANICAL SYSTEMS.

2.5.4 Condensate Drain Lines

Condensate drainage shall be provided for each item of equipment that generates condensate.

2.6 ELECTRICAL WORK

Electrical motor-driven equipment specified shall be provided complete with motor, motor starter, and controls. Unless otherwise specified, electric equipment, including wiring and motor efficiencies, shall be according to Section 16402 INTERIOR DISTRIBUTION SYSTEM . Electrical characteristics and enclosure type shall be as shown. Unless otherwise indicated, motors of 745 W and above shall be high efficiency type. Motor starters shall be provided complete with thermal overload protection and other appurtenances necessary. Each motor shall be according to NEMA MG 1 and shall be of sufficient size to drive the equipment at the specified capacity without exceeding the nameplate rating of the motor. Manual or automatic control and protective or signal devices required for the operation specified, and any control wiring required for controls and devices, but not shown, shall be provided. Where two-speed or variable-speed motors are indicated, solid-state variable-speed controller may be provided to accomplish the same function.

2.7 CONTROLS

Controls shall be provided as specified in Section 15950 HEATING, VENTILATING AND AIR CONDITIONING (HVAC) CONTROL SYSTEMS.

2.8 DUCTWORK COMPONENTS

2.8.1 Metal Ductwork

All aspects of metal ductwork construction, including all fittings and components, shall comply with SMACNA HVAC Duct Const Stds unless otherwise specified. Elbows shall be radius type with a centerline radius of 1.5 times the width or diameter of the duct where space permits. Otherwise, elbows having a minimum radius equal to the width or diameter of the duct or square elbows with factory fabricated turning vanes may be used. Static pressure Class 125, 250, and 500 Pa (1/2, 1, and 2 inch w.g.) ductwork shall meet the requirements of Seal Class C. Class 750 through 2500 Pa (3 through 10 inch w.g.) shall meet the requirements of Seal Class A. Sealants shall conform to fire hazard classification specified in Section 15080 THERMAL INSULATION FOR MECHANICAL SYSTEMS and shall be suitable for the range of air distribution and ambient temperatures that it will be exposed to. Pressure sensitive tape shall not be used as a sealant. Spiral lock seam duct, and flat oval shall be made with duct sealant and locked with not less than 3 equally spaced drive screws or other approved methods indicated in SMACNA HVAC Duct Const Stds. The sealant shall be applied to the exposed male part of the fitting collar so that the sealer will be on the inside of the joint and fully protected by the metal of the

duct fitting. One brush coat of the sealant shall be applied over the outside of the joint to at least 50 mm band width covering all screw heads and joint gap. Dents in the male portion of the slip fitting collar will not be acceptable. Outdoor air intake ducts and plenums shall be fabricated with watertight soldered or brazed joints and seams.

2.8.1.1 Transitions

Diverging air flow transitions shall be made with each side pitched out a maximum of 15 degrees, for an included angle of 30 degrees. Transitions for converging air flow shall be made with each side pitched in a maximum of 30 degrees, for an included angle of 60 degrees, or shall be as indicated. Factory-fabricated reducing fittings for systems using round duct sections when formed to the shape of the ASME short flow nozzle, need not comply with the maximum angles specified.

2.8.1.2 General Service Duct Connectors

A flexible duct connector approximately 150 mm in width shall be provided where sheet metal connections are made to fans or where ducts of dissimilar metals are connected. For round/oval ducts, the flexible material shall be secured by stainless steel or zinc-coated, iron clinch-type draw bands. For rectangular ducts, the flexible material locked to metal collars shall be installed using normal duct construction methods. The composite connector system shall comply with UL 214 and be classified as "flame-retarded fabrics" in UL Bld Mat Dir.

2.8.2 Ductwork Accessories

2.8.2.1 Duct Access Doors

Access doors shall be provided in ductwork and plenums where indicated and at all automatic motorized dampers, fire dampers, coils, thermostats, and other apparatus requiring service and inspection in the duct system, and unless otherwise shown, shall conform to SMACNA HVAC Duct Const StdsDIN, I.E.C., BS, or EN standards. Access doors shall be provided upstream and downstream of air flow measuring primaries and heating and cooling coils. Doors shall be minimum 375 x 450 mm, unless otherwise shown. Where duct size will not accommodate this size door, the doors shall be made as large as practicable. Doors 600 x 600 mm or larger shall be provided with fasteners operable from both sides. Doors in insulated ducts shall be the insulated type.

2.8.2.2 Fire Dampers

Fire dampers shall be 1.5 hour fire rated unless otherwise indicated. Fire dampers shall conform to the requirements of NFPA 90A and UL 555. The Contractor shall perform the fire damper test as outlined in NFPA 90A. A pressure relief damper shall be provided upstream of the fire damper. If the ductwork connected to the fire damper is to be insulated then this pressure relief damper shall be factory insulated. Fire dampers shall be automatic motorized operating type and shall have a dynamic rating suitable for the maximum air velocity and pressure differential to which it will be subjected. Fire dampers shall be approved for the specific application, and shall be installed according to their listing. Fire dampers shall be equipped with a steel sleeve or adequately sized frame installed in such a manner that disruption of the attached ductwork, if any, will not impair the operation of the damper. Sleeves or frames shall be equipped with perimeter mounting angles attached on both sides of the wall or floor

opening. Ductwork in fire-rated floor-ceiling or roof-ceiling assembly systems with air ducts that pierce the ceiling of the assemblies shall be constructed in conformance with UL Fire Resist Dir. Fire dampers shall be curtain type with damper blades in the air stream out of the air stream. Dampers shall not reduce the duct or the air transfer opening cross-sectional area. Dampers shall be installed so that the centerline of the damper depth or thickness is located in the centerline of the wall, partition or floor slab depth or thickness. Unless otherwise indicated, the installation details given in SMACNA Install Fire Damp HVAC and in manufacturer's instructions for fire dampers shall be followed. Acceptance testing of fire dampers shall be performed per paragraph Fire Damper Acceptance Test and NFPA 90A.

2.8.2.3 Splitters and Manual Balancing Dampers

Splitters and manual balancing dampers shall be furnished with accessible operating mechanisms. Splitters shall be operated by quadrant operators or 5 mm rod brought through the side of the duct with locking setscrew and bushing. One rod is required on splitters. Manual volume control dampers shall be operated by locking-type quadrant operators. Unless otherwise indicated, multileaf dampers shall be opposed blade type with maximum blade width of 300 mm . Access doors or panels shall be provided for all concealed damper operators and locking setscrews. Unless otherwise indicated, the locking-type quadrant operators for dampers, when installed on ducts to be thermally insulated, shall be provided with stand-off mounting brackets, bases, or adapters to provide clearance between the duct surface and the operator not less than the thickness of the insulation. Stand-off mounting items shall be integral with the operator or standard accessory of the damper manufacturer. Volume dampers shall be provided where indicated.

2.8.2.4 Air Deflectors and Branch Connections

Air deflectors shall be provided at duct mounted supply outlets, at takeoff or extension collars to supply outlets, at duct branch takeoff connections, and at 90 degree elbows, as well as at locations as indicated on the drawings or otherwise specified. Conical branch connections or 45 degree entry connections may be used in lieu of deflectors or extractors for branch connections. All air deflectors, except those installed in 90 degree elbows, shall be provided with an approved means of adjustment. Adjustment shall be made from easily accessible means inside the duct or from an adjustment with sturdy lock on the face of the duct. When installed on ducts to be thermally insulated, external adjustments shall be provided with stand-off mounting brackets, integral with the adjustment device, to provide clearance between the duct surface and the adjustment device not less than the thickness of the thermal insulation. Air deflectors shall be factory-fabricated units consisting of curved turning vanes or louver blades designed to provide uniform air distribution and change of direction with minimum turbulence or pressure loss. Air deflectors shall be factory or field assembled. Blade air deflectors, also called blade air extractors, shall be approved factory fabricated units consisting of equalizing grid and adjustable blade and lock. Adjustment shall be easily made from the face of the diffuser or by position adjustment and lock external to the duct. Stand-off brackets shall be provided on insulated ducts and are described herein. Fixed air deflectors, also called turning vanes, shall be provided in 90 degree elbows.

2.8.3 Duct Sleeves, Framed Prepared Openings, Closure Collars

2.8.3.1 Duct Sleeves

Duct sleeves shall be provided for round ducts 375 mm in diameter or less passing through floors, walls, ceilings, or roof, and installed during construction of the floor, wall, ceiling, or roof. Round ducts larger than 375 mm in diameter and square, rectangular, and oval ducts passing through floors, walls, ceilings, or roof shall be installed through framed prepared openings. The Contractor shall be responsible for the proper size and location of sleeves and prepared openings. Sleeves and framed openings are also required where grilles, registers, and diffusers are installed at the openings. Framed prepared openings shall be fabricated from 1.0 mm (20 gauge) galvanized steel, unless otherwise indicated. Where sleeves are installed in bearing walls or partitions, black steel pipe, ASTM A 53/A 53M, Schedule 20 shall be used. Sleeve shall provide 25 mm clearance between the duct and the sleeve or 25 mm clearance between the insulation and the sleeve for insulated ducts.

2.8.3.2 Framed Prepared Openings

Openings shall have 25 mm clearance between the duct and the opening or 25 mm clearance between the insulation and the opening for insulated ducts.

2.8.3.3 Closure Collars

Collars shall be fabricated of galvanized sheet metal not less than 100 mm wide, unless otherwise indicated, and shall be installed on exposed ducts on each side of walls or floors where sleeves or prepared openings are provided. Collars shall be installed tight against surfaces. Collars shall fit snugly around the duct or insulation. Sharp edges of the collar around insulated duct shall be ground smooth to preclude tearing or puncturing the insulation covering or vapor barrier. Collars for round ducts 375 mm in diameter or less shall be fabricated from 1.0 mm (20 gauge) galvanized steel. Collars for round ducts larger than 375 mm and square, and rectangular ducts shall be fabricated from 1.3 mm (18 gauge) galvanized steel. Collars shall be installed with fasteners on maximum 150 mm centers, except that not less than 4 fasteners shall be used.

2.8.4 Plenums and Casings for Field-Fabricated Units

2.8.4.1 Plenum and Casings

Plenums and casings shall be fabricated and erected as shown in SMACNA HVAC Duct Const Stds, as applicable. Unless otherwise indicated, system casing shall be constructed of not less than 1.6 mm (16 gauge) galvanized sheet steel. Cooling coil drain pans with 25 mm threaded outlet shall be provided to collect condensation from the cooling coils. Drain pans shall be fabricated of not lighter than 1.6 mm (16 gauge) steel, galvanized after fabrication or of 1.3 mm (18 gauge) corrosion-resisting sheet steel conforming to ASTM A 167, Type 304, welded and stiffened. Drain pans exposed to the atmosphere shall be thermally insulated to prevent condensation. Insulation shall be coated with a flame resistant waterproofing material. Separate drain pans shall be provided for each vertical coil section, and a separate drain line shall be provided for each pan. Pans shall be generously sized to ensure capture of entrained moisture on the downstream-air side of the coil. Openings in the casing, such as for piping connections, shall be sealed and covered to prevent air leakage. Water seal for the drain shall provide at least 500

Pa greater than the maximum negative pressure in the coil space.

2.8.4.2 Casing

Casings shall be terminated at the curb line and anchored by the use of galvanized angle iron sealed and bolted to the curb, as indicated in SMACNA HVAC Duct Const Stds.

2.8.4.3 Access Doors

Access doors shall be provided in each section of the casing. Door frames shall be welded in place, and each door shall be neoprene gasketed, hinged with minimum of two brass hinges, and fastened with a minimum of two brass tension fasteners operable from inside and outside of the casing. Where possible, doors shall be 900 x 450 mm located 450 mm above the floor. Where the space available will not accommodate doors of this size, doors as large as the space will accommodate shall be provided. Doors shall swing so that fan suction or pressure holds door in closed position, and shall be airtight. A push-button station to stop the supply fan shall be located inside the casing where indicated.

2.8.4.4 Factory-Fabricated Insulated Sheet Metal Panels

Factory-fabricated components may be used for field-assembled units, provided all requirements specified for field-fabricated plenums and casings are met. Panels shall be of modular design, pretested for structural strength, thermal control, condensation control, and acoustical control. Panel joints shall be sealed and insulated access doors shall be provided and gasketed to prevent air leakage. Panel construction shall be not less than 1.0 mm (20 gauge) galvanized sheet steel and shall be assembled with fasteners treated against corrosion. Standard length panels shall deflect not more than 13 mm under operation. Details of construction, including joint sealing, not specifically covered shall be as indicated in SMACNA HVAC Duct Const Stds. The plenums and casings shall be constructed to withstand the specified internal pressure of the air systems.

2.8.5 Diffusers, Registers, and Grilles

Units shall be factory-fabricated of steel, corrosion-resistant steel, or aluminum and shall distribute the specified quantity of air evenly over space intended without causing noticeable drafts, air movement faster than 0.25 m/s (50 fpm) in occupied zone, or dead spots anywhere in the conditioned area. Outlets for diffusion, spread, throw, and noise level shall be as required for specified performance. Performance shall be certified according to ASHRAE 70. Inlets and outlets shall be sound rated and certified according to ASHRAE 70. Sound power level shall be as indicated. Diffusers and registers shall be provided with volume damper with accessible operator, unless otherwise indicated; or if standard with the manufacturer, an automatically controlled device will be acceptable. Volume dampers shall be opposed blade type for all diffusers and registers. Where the inlet and outlet openings are located less than 2 m above the floor, they shall be protected by a grille or screen according to NFPA 90A.

2.8.5.1 Diffusers

Diffuser types shall be as indicated. Diffusers shall be provided with air deflectors of the type indicated. Air handling troffers or combination light and ceiling diffusers shall conform to the requirements of UL Elec Const Dir for the interchangeable use as cooled or heated air

supply diffusers or return air units. Ceiling mounted units shall be installed with rims tight against ceiling. Sponge rubber gaskets shall be provided between ceiling and surface mounted diffusers for air leakage control. Suitable trim shall be provided for flush mounted diffusers. Duct collar connecting the duct to diffuser shall be airtight and shall not interfere with volume controller. Return or exhaust units shall be similar to supply diffusers.

2.8.5.2 Registers and Grilles

Units shall be four-way directional-control type, except that return and exhaust registers may be fixed horizontal or vertical louver type similar in appearance to the supply register face. Registers shall be provided with sponge-rubber gasket between flanges and wall or ceiling. Wall supply registers shall be installed at least 150 mm below the ceiling unless otherwise indicated. Return and exhaust registers shall be located 150 mm above the floor unless otherwise indicated. Four-way directional control may be achieved by a grille face which can be rotated in 4 positions or by adjustment of horizontal and vertical vanes. Grilles shall be as specified for registers, without volume control damper.

2.8.6 Louvers

Louvers for installation in exterior walls which are associated with the air supply and distribution system shall be as specified in Section 10201 METAL WALL AND DOOR LOUVERS.

2.8.7 Air Vents, Penthouses, Goosenecks, and Gravity Vents

Air vents, penthouses, goosenecks, and gravity vents shall be fabricated from galvanized steel or aluminum sheets with galvanized or aluminum structural shapes. Air vents, penthouses, goosenecks, and gravity vents shall be provided with bird screen.

Gravity roof ventilators shall be constructed of heavy gauge aluminum or galvanized steel as specified. Bases shall be constructed so that the curb cap is 8 inches (204 mm) larger than the throat size. Base height shall be minimum 12 inches (305 mm) high.
Hood support members shall be constructed of galvanized steel and fastened so that the hood can be either removed completely from the base or hinged open. Birdscreens constructed of 1/2 inch (12 mm) galvanized steel mesh shall be mounted horizontally across the intake/discharge area of the hood.

Gravity vents shall be constructed as noted on the contract drawings except the base height shall be not less than described above. Provide gravity ventilators with cleanable air filters where indicated on the drawings. Gravity ventilators shall be painted.

2.8.8 Bird Screens and Frames

Bird screen shall be aluminum or stainless steel grid as recommended by the manufacturer. Frames shall be removable extruded aluminum or stainless steel.

2.9 AIR SYSTEMS EQUIPMENT

2.9.1 Fans

Fans shall be tested and rated according to AMCA 210 or DIN 24163-1,

DIN 24163-2 or DIN 24163-3. Fans may be connected to the motors either directly or indirectly with V-belt drive. V-belt drives shall be designed for not less than 120 percent of the connected driving capacity. Motors for V-belt drives shall be provided with adjustable rails or bases. Removable metal guards shall be provided for all exposed V-belt drives, and speed-test openings shall be provided at the center of all rotating shafts. Fans shall be provided with personnel screens or guards on both suction and supply ends, except that the screens need not be provided, unless otherwise indicated, where ducts are connected to the fan. Fan and motor assemblies shall be provided with vibration-isolation supports or mountings as indicated. Vibration-isolation units shall be standard products with published loading ratings. Each fan shall be selected to produce the capacity required at the fan static pressure indicated. Maximum allowed fan RPM shall be 1450.

2.9.1.1 Centrifugal Fans

Centrifugal fans shall be fully enclosed, single-width single-inlet, or double-width double-inlet. Impeller wheels shall be rigidly constructed, accurately balanced both statically and dynamically. Fan blades may be forward-curved, backward-curved or airfoil design in wheel sizes up to 750 mm . Fan blades for wheels over 750 mm in diameter shall be backward-curved or airfoil design. Fan wheels over 900 mm in diameter shall have overhung pulleys and a bearing on each side of the wheel. Fan wheels 900 mm or less in diameter may have one or more extra long bearings between the fan wheel and the drive. Bearings shall be sleeve type, self-aligning and self-oiling with oil reservoirs, or precision self-aligning roller or ball-type with accessible grease fittings or permanently lubricated type. Grease fittings shall be connected to tubing and serviceable from a single accessible point.

2.9.1.2 Axial Flow Fans

Axial flow fans shall be complete with drive components. Fan wheels shall have radially projecting blades and shall be dynamically balanced and keyed to the fan shaft. Fan bearings and drive shafts shall be enclosed and isolated from the air stream. Fan bearings shall be sealed against dust and dirt. Diffuser or straightening vanes shall be provided at the fan discharge to minimize turbulence and provide smooth discharge air flow.

2.9.1.3 Panel Type Power Wall Ventilators

Fans shall be centrifugal type. Fan shall be direct or V-belt drive type. Fans shall be furnished with wall mounting collar and other accessories indicated. Lubricated bearings shall be provided. Motor enclosures shall be drip-proof type, except as otherwise indicated on the drawings. Gravity back-draft dampers shall be provided where indicated.

2.9.1.4 Centrifugal Type Power Roof Ventilators

Fans shall be direct or V-belt driven with backward inclined, non-overloading wheel. Fans shall be provided with birdscreen, disconnect switch, gravity roof curb, and extended base. Motors enclosure shall be dripproof type, except as otherwise indicated on Drawings. Kitchen exhaust fans shall be centrifugal type according to UL 705 and fittes with V-belt drive, round hood, and windband upblast discharge configuration, motor and power transmission components located in outside positively air ventilated compartment. Use only lubricated bearings.

2.9.1.5 Ceiling Exhaust Fans

Suspended cabinet-type ceiling exhaust fans shall be centrifugal type, direct-driven. Fans shall have acoustically insulated housing. Integral backdraft damper shall be chatter-proof. The integral face grille shall be of egg-crate design or louver design. Fan motors shall be mounted on vibration isolators. Unit shall be provided with mounting flange for hanging unit from above. Fans shall be UL listed.

2.9.2 Coils

Coils shall be fin-and-tube type constructed of seamless copper tubes and aluminum fins mechanically bonded. When required, multiple tube supports shall be provided to prevent tube sag. Coils shall be rated and certified according to ARI 410.

2.9.2.1 Direct-Expansion Coils

Direct-expansion coils shall be suitable for the refrigerant involved. Refrigerant piping shall conform to ASTM B 280 and shall be cleaned, dehydrated and sealed. Suction headers shall be seamless copper tubing or seamless or resistance welded steel tube with copper connections. Supply headers shall consist of a distributor which shall distribute the refrigerant through seamless copper tubing equally to all circuits in the coil. Tubes shall be circuited to ensure minimum pressure drop and maximum heat transfer. Circuiting shall permit refrigerant flow from inlet to suction outlet without causing oil slugging or restricting refrigerant flow in coil. Each coil to be field installed shall be completely dehydrated and sealed at the factory upon completion of pressure tests.

2.9.2.2 Electric Coils

Electric resistance heaters shall be of the duct mounting type consisting of nickel-chromium resistor mounted on refractory material and a steel or aluminum frame for attachment to ductwork. Electric duct heater shall meet the requirements of UL, DIN, I.E.C., BS, or EN standards, and shall be provided with a built-in or surface-mounted high-limit thermostat. Electric duct heaters shall be interlocked electronically so that heaters cannot be energized unless the fan is running.

2.9.3 Air Filters

Filters shall be as specified hereinafter .

2.9.3.1 Extended Surface Pleated Panel Filters

Filters shall be 50 mm depth, sectional, disposable type of the size indicated and shall have an average efficiency of 25 to 30 percent when tested according to ASHRAE 52.1. Media shall be nonwoven cotton and synthetic fiber mat. A wire support grid bonded to the media shall be attached to a moisture resistant fiberboard frame. All four edges of the filter media shall be bonded to the inside of the frame to prevent air bypass and increase rigidity.

2.9.3.2 Extended Surface Nonsupported Pocket Filters

Filters shall be 750 mm depth, sectional, replaceable dry media type of the size indicated and shall have an average efficiency of 80 to 85 percent when tested according to ASHRAE 52.1. Filters shall be UL Class 1. Media

shall be fibrous glass, supported in the air stream by a wire or non-woven synthetic backing and secured to a galvanized steel metal header. Pockets shall not sag or flap at anticipated air flows. Each filter shall be installed with an extended surface pleated panel filter as a prefilter, as standard with manufacturer, in a factory preassembled, side access housing or a factory-made sectional frame bank, as indicated.

2.9.3.3 Sectional Cleanable Filters

Cleanable filters shall be 25 mm thick. Viscous adhesive shall be provided in 20 liter containers in sufficient quantity for 12 cleaning operations and not less than one liter for each filter section. Initial pressure drop for clean filters shall not exceed the applicable values listed in ASTM F 872.

2.9.3.4 Range and Griddle Hood Service

Filter shall be sectional, permanent, washable, all metallic media type, nominal 50 mm thick, with suitable metal frames, designed for extraction of grease from grease-laden air.

2.9.3.5 Kitchen Exhaust Hood Filters

Filters shall be solid baffle design, U.L. listed for grease removal and meeting provisions of NFPA 96. Filters shall be aluminum and made from curved baffle plates alternately arranged in a convex/concave position, partially overlapping each other. Grease laden air flows around the baffles and grease impinges on the baffle plates. Air pressure drop shall not exceed 0.20 inches wg at 150 feet per minute face velocity. Filters shall be manufactured by American Air Filter or equal.

2.9.3.6 Holding Frames

Frames shall be fabricated from not lighter than 1.6 mm (16 gauge) sheet steel with rust-inhibitor coating. Each holding frame shall be equipped with suitable filter holding devices. Holding frame seats shall be gasketed. All joints shall be airtight.

2.9.3.7 Filter Gauges

Filter gauges shall be dial type, diaphragm actuated draft and shall be provided for all filter stations, including those filters which are furnished as integral parts of factory fabricated air handling units. Gauges shall be at least 98 mm in diameter, shall have white dials with black figures, and graduations and shall have a minimum range of 0.25 kPa (1 inch of water) beyond the specified final resistance for the filter bank on which each gauge is applied. Each gauge shall incorporate a screw operated zero adjustment and shall be furnished complete with two static pressure tips with integral compression fittings, two molded plastic vent valves, two 1.5 m minimum lengths of 6.35 mm diameter aluminum tubing, and all hardware and accessories for gauge mounting.

2.10 AIR HANDLING UNITS

2.10.1 Factory-Fabricated Air Handling Units

Units shall be single-zone draw-through type as indicated. Units shall include fans, coils, airtight insulated casing, prefilters, secondary filter sections, adjustable V-belt drives, belt guards for externally

mounted motors, access sections where indicated. Vibration isolators shall be as indicated. Each air handling unit shall have physical dimensions suitable to fit space allotted to the unit and shall have the capacity indicated. Air handling unit shall have published ratings based on tests performed according to ARI 430.

2.10.1.1 Casings

Casing shall be designed and constructed with an integral insulated structural steel frame such that exterior panels are non-load bearing. Exterior panels shall be individually removable. Removal shall not affect the structural integrity of the unit. Casings shall be provided with inspection doors, access sections, and access doors as indicated. Inspection and access doors shall be insulated, fully gasketed, double-wall type. Doors shall be rigid and provided with heavy duty hinges and latches. Access Sections shall be according to paragraph AIR HANDLING UNITS. Drain pans shall be constructed water tight, treated to prevent corrosion, and designed for positive condensate drainage. When 2 or more cooling coils are used, with one stacked above the other, condensate from the upper coils shall not flow across the face of lower coils. Intermediate drain pans or condensate collection channels and downspouts shall be provided, as required to carry condensate to the unit drain pan out of the air stream and without moisture carryover. Drain pan shall be constructed so that the pan may be visually inspected easily including underneath the coil without removal of the coil and so that the pan may be physically cleaned completely and easily underneath the coil without removal of the coil. Air handling unit casing insulation shall be uniform over the entire casing. A latched and hinged inspection door, shall be provided in the fan and coil sections. Additional inspection doors, access doors and access sections shall be provided where indicated.

2.10.1.2 Heating Coils

Coils shall be provided as specified in paragraph AIR SYSTEMS EQUIPMENT, for types indicated.

2.10.1.3 Air Filters

Air filters shall be as specified in paragraph AIR SYSTEMS EQUIPMENT for types and thickness indicated.

2.10.1.4 Fans

Fans shall be double-inlet, centrifugal type with each fan in a separate scroll. Fans and shafts shall be dynamically balanced prior to installation into air handling unit, then the entire fan assembly shall be statically and dynamically balanced at the factory after it has been installed in the air handling unit. Fans shall be mounted on steel shafts accurately ground and finished. Bearings shall be permanently lubricated or lubricated type with lubrication fittings readily accessible at the drive side of the unit. Bearings may not be fastened directly to the unit sheet metal casing. Fans and scrolls shall be furnished with coating indicated. Fans shall be driven by a unit-mounted or a floor-mounted motor connected to fans by V-belt drive complete with belt guard for externally mounted motors. Belt drives shall be designed for not less than a 1.3 service factor based on motor nameplate rating. Motors for V-belt drives shall be provided with adjustable bases. Unit fan or fans shall be selected to produce the required capacity at the fan static pressure. The sound power level values shall be obtained according to AMCA 300, ASHRAE 68,

or ARI 260.

2.10.1.5 Access Sections and Filter/Mixing Boxes

Access sections shall be provided where indicated and shall be furnished with access doors as shown. Access sections and filter/mixing boxes shall be constructed in a manner identical to the remainder of the unit casing and shall be equipped with access doors. Mixing boxes shall be designed to minimize air stratification and to promote thorough mixing of the air streams.

2.10.1.6 Dampers

Dampers shall be as specified in paragraph CONTROLS.

2.11 FACTORY PAINTING

Units which are not of galvanized construction according to ASTM A 123/A 123M or ASTM A 924/A 924M shall be factory painted with a corrosion resisting paint finish. Internal and external ferrous metal surfaces shall be cleaned, phosphatized and coated with a paint finish which has been tested according to ASTM B 117, ASTM D 1654, and ASTM D 3359. Evidence of satisfactory paint performance for a minimum of 125 hours for units to be installed indoors and 500 hours for units to be installed outdoors shall be submitted. Rating of failure at the scribe mark shall be not less than 6, average creepage not greater than 3 mm.. Rating of the inscribed area shall not be less than 10, no failure. On units constructed of galvanized steel which have been welded, exterior surfaces of welds or welds that have burned through from the interior shall receive a final shop docket of zinc-rich protective paint according to ASTM D 520 Type I.

2.12 HEAT-COOL-UNIT (DIESEL-FIRED & EVAPORATIVE COOLED)

See Drawing CO-M-07 for details on these units.

PART 3 EXECUTION

3.1 INSTALLATION

Work shall be installed as shown and according to the manufacturer's diagrams and recommendations.

3.1.1 Piping

Pipe and fitting installation shall conform to the requirements of ASME B31.1. Pipe shall be cut accurately to measurements established at the jobsite, and worked into place without springing or forcing, completely clearing all windows, doors, and other openings. Cutting or other weakening of the building structure to facilitate piping installation will not be permitted without written approval. Pipe or tubing shall be cut square, shall have burrs removed by reaming, and shall permit free expansion and contraction without causing damage to the building structure, pipe, joints, or hangers. Changes in direction shall be made with fittings, except that bending of pipe 100 mm and smaller will be permitted, provided a pipe bender is used and wide sweep bends are formed. The centerline radius of bends shall not be less than 6 diameters of the pipe. Bent pipe showing kinks, wrinkles, flattening, or other malformations will not be accepted. Horizontal supply mains shall pitch down in the direction of flow as indicated. The grade shall be not less

than 2 mm in 1 m . Reducing fittings shall be used for changes in pipe sizes. Open ends of pipelines and equipment shall be capped or plugged during installation to keep dirt or other foreign materials out of the system. Pipe not otherwise specified shall be uncoated. Connections to appliances shall be made with malleable iron unions for steel pipe 65 mm or less in diameter, and with flanges for pipe 80 mm and larger. Connections between ferrous and copper piping shall be electrically isolated from each other with dielectric unions or flanges. All piping located in air plenums shall conform to NFPA 90A requirements. Pipe and fittings installed in inaccessible conduits or trenches under concrete floor slabs shall be welded.

3.1.1.1 Soldered Joints

Joints in copper tubing shall be cut square with ends reamed, and all filings and dust wiped from interior of pipe. Joints shall be soldered with 95/5 solder or brazed with silver solder applied and drawn through the full fitting length. Care shall be taken to prevent annealing of tube or fittings when making connections. Joints 65 mm and larger shall be made with heat uniformly around the entire circumference of the joint with a multi-flame torch. Connections in floor slabs shall be brazed. Excess solder shall be wiped from joint before solder hardens. Solder flux shall be liquid or paste form, non-corrosive and conform to ASTM B 813.

3.1.2 Supports

3.1.2.1 General

Hangers used to support piping 50 mm and larger shall be fabricated to permit adequate adjustment after erection while still supporting the load. Pipe guides and anchors shall be installed to keep pipes in accurate alignment, to direct the expansion movement, and to prevent buckling, swaying, and undue strain. Piping subjected to vertical movement when operating temperatures exceed ambient temperatures shall be supported by variable spring hangers and supports or by constant support hangers.

3.1.2.2 Seismic Requirements (Pipe Supports and Structural Bracing)

Structural steel required for reinforcement to properly support piping, headers, and equipment but not shown shall be provided under this section.

3.1.2.3 Pipe Hangers, Inserts and Supports

Pipe hangers, inserts, and supports shall conform to MSS SP-58 and MSS SP-69 except as modified herein.

a. Hangers: Type 3 shall not be used on insulated piping.

b. C-Clamps: Type 19 and 23 C-clamps shall be torqued per MSS SP-69 and have both locknuts and retaining devices, furnished by the manufacturer. Field-fabricated C-clamp bodies or retaining devices are not acceptable.

c. Angle Attachments: Type 20 attachments used on angles shall conform to International Building Code requirements and ASTM standards and channels shall be furnished with an added malleable-iron heel plate or adapter.

d. Hangers shall conform to International Building Code

requirements and ASTM standards.

e. Hangers shall conform to International Building Code requirements and ASTM standards shall be used on all insulated pipe 100 mm and larger when the temperature of the medium is above 15.5 degrees C. Type 39 saddles shall be welded to the pipe.

f. Type 40 shields shall be used on all insulated pipes less than 100 mm .

g. Insulated Pipe: Insulation on horizontal pipe shall be continuous through hangers for hot and cold piping. Other requirements on insulated pipe are specified in Section 15080 THERMAL INSULATION FOR MECHANICAL SYSTEMS.

3.1.3 Pipe Sleeves

Sleeves shall not be installed in structural members except where indicated or approved. Rectangular and square openings shall be as detailed. Each sleeve shall extend through its respective wall, floor, or roof, and shall be cut flush with each surface. Pipes passing through concrete or masonry wall or concrete floors or roofs shall be provided with pipe sleeves fitted into place at the time of construction. Unless otherwise indicated, sleeves shall provide a minimum of 6 mm all-around clearance between bare pipe and sleeves or between jacket over insulation and sleeves. Sleeves in bearing walls, waterproofing membrane floors, and wet areas shall be steel pipe or cast iron pipe. Sleeves in non-bearing walls, floors, or ceilings may be steel pipe, cast iron pipe, galvanized sheet metal with lock-type longitudinal seam and of the metal thickness indicated, or moisture resistant fiber or plastic. Except in pipe chases or interior walls, the annular space between pipe and sleeve or between jacket over insulation and sleeve, in non-fire rated walls, shall be sealed as indicated and specified in Section 07900 JOINT SEALING. Pipes passing through wall waterproofing membrane shall be sleeved as specified above, and a waterproofing clamping flange shall be installed as indicated.

3.1.3.1 Roof and Floor Sleeves

Pipes passing through roof or floor waterproofing membrane shall be installed through a 17-ounce copper sleeve or a 0.8 mm thick aluminum sleeve, each within an integral skirt or flange. Flashing sleeve shall be suitably formed, and skirt or flange shall extend not less than 200 mm from the pipe and shall be set over the roof or floor membrane in a troweled coating of bituminous cement. Unless otherwise shown, the flashing sleeve shall extend up the pipe a minimum of 50 mm above highest floor level or a minimum of 250 mm above the roof. The annular space between the flashing sleeve and the bare pipe or between the flashing sleeve and the metal-jacket-covered insulation shall be sealed as indicated. Pipes up to and including 250 mm in diameter passing through roof or floor waterproofing membrane may be installed through a cast iron sleeve with caulking recess, anchor lugs, flashing clamp device, and pressure ring with brass bolts. Waterproofing membrane shall be clamped into place and sealant shall be placed in the caulking recess. In lieu of a waterproofing clamping flange and caulking and sealing of annular space between pipe and sleeve or conduit and sleeve, a modular mechanical type sealing assembly may be installed. Seals shall consist of interlocking synthetic rubber links shaped to continuously fill the annular space between the pipe/conduit and sleeve with corrosion protected carbon steel bolts, nuts, and pressure plates. Links shall be loosely assembled with

bolts to form a continuous rubber belt around the pipe with a pressure plate under each bolt head and each nut. After the seal assembly is properly positioned in the sleeve, tightening of the bolt shall cause the rubber sealing elements to expand and provide a watertight seal between the pipe/conduit and the sleeve. Each seal assembly shall be sized as recommended by the manufacturer to fit the pipe/conduit and sleeve involved.

3.1.3.2 Escutcheons

Escutcheons shall be provided at finished surfaces where exposed piping, bare or insulated, passes through floors, walls, or ceilings except in boiler, utility, or equipment rooms. Where sleeves project slightly from floors, special deep-type escutcheons shall be used. Escutcheons shall be secured to pipe or pipe covering.

3.1.4 Condensate Drain Lines

Water seals shall be provided in the condensate drain from all units except room through the wall A/C units. The depth of each seal shall be 50 mm plus 0.1 mm for each Pa, of the total static pressure rating of the unit to which the drain is connected. Water seals shall be constructed of 2 tees and an appropriate U-bend with the open end of each tee plugged. Pipe cap or plug cleanouts shall be provided where indicated. Drains indicated to connect to the sanitary waste system shall be connected by an indirect waste fitting. Air conditioner drain lines shall be insulated as specified in Section 15080 THERMAL INSULATION FOR MECHANICAL SYSTEMS.

3.1.5 Equipment and Installation

Frames and supports shall be provided for tanks, compressors, pumps, valves, air handling units, fans, coils, dampers, and other similar items requiring supports. Air handling units shall be floor mounted or ceiling hung, as indicated. The method of anchoring and fastening shall be as detailed. Floor-mounted equipment, unless otherwise indicated, shall be set on not less than 150 mm concrete pads or curbs doweled in place. Concrete foundations for circulating pumps shall be heavy enough to minimize the intensity of the vibrations transmitted to the piping and the surrounding structure, as recommended in writing by the pump manufacturer. In lieu of a concrete pad foundation, a concrete pedestal block with isolators placed between the pedestal block and the floor may be provided. The concrete foundation or concrete pedestal block shall be of a mass not less than three times the weight of the components to be supported. Lines connected to the pump mounted on pedestal blocks shall be provided with flexible connectors. Foundation drawings, bolt-setting information, and foundation bolts shall be furnished prior to concrete foundation construction for all equipment indicated or required to have concrete foundations. Concrete for foundations shall be as specified in Section 03300 CAST-IN-PLACE STRUCTURAL CONCRETE.

3.1.6 Access Panels

Access panels shall be provided for concealed valves, vents, controls, dampers, and items requiring inspection or maintenance. Access panels shall be of sufficient size and located so that the concealed items may be serviced and maintained or completely removed and replaced. Access panels shall be as specified in Seciton 05500 MISCELLANEOUS METALS.

3.1.7 Flexible Connectors

Pre-insulated flexible connectors and flexible duct shall be attached to other components in accordance with the latest printed instructions of the manufacturer to ensure a vapor tight joint. Hangers, when required to suspend the connectors, shall be of the type recommended by the connector or duct manufacturer and shall be provided at the intervals recommended.

3.1.8 Sleeved and Framed Openings

For non-fire rated penetrations, the space shall be packed as specified in Section 07900 JOINT SEALING.

3.1.9 Metal Ductwork

Installation shall be according to SMACNA HVAC Duct Const Stds unless otherwise indicated. Duct supports for sheet metal ductwork shall be according to SMACNA HVAC Duct Const Stds, unless otherwise specified. Friction beam clamps indicated in SMACNA HVAC Duct Const Stds shall not be used. Risers on high velocity ducts shall be anchored in the center of the vertical run to allow ends of riser to move due to thermal expansion. Supports on the risers shall allow free vertical movement of the duct. Supports shall be attached only to structural framing members and concrete slabs. Supports shall not be anchored to metal decking unless a means is provided and approved for preventing the anchor from puncturing the metal decking. Where supports are required between structural framing members, suitable intermediate metal framing shall be provided. Where C-clamps are used, retainer clips shall be provided.

3.1.9.1 Light Duty Corrosive Exhaust Ductwork

Light duty corrosive exhaust ductwork shall be PVC plastisol coated galvanized steel with PVC coating on interior and exterior surfaces. Provide where indicated.

3.1.10 Kitchen Exhaust Ductwork

3.1.10.1 Ducts Conveying Smoke and Grease Laden Vapors

Ducts conveying smoke and grease laden vapors shall conform to requirements of NFPA 96. Seams, joints, penetrations, and duct-to-hood collar connections shall have a liquid tight continuous external weld. Duct material shall be minimum 1.3 mm (18 gauge), Type 304L or 316L, stainless steel. Duct construction shall include external perimeter angle sized in accordance with SMACNA HVAC Duct Const Stds, except welded joint reinforcement shall be on maximum of 600 mm centers; continuously welded companion angle bolted flanged joints with flexible ceramic cloth gaskets where indicated; pitched to drain at low points; welded pipe coupling-plug drains at low points; welded fire protection and detergent cleaning penetration; steel framed, stud bolted, and flexible ceramic cloth gasketed cleaning access provisions where indicated. Angles, pipe couplings, frames, bolts, etc., shall be same material as that specified for the duct unless indicated otherwise.

3.1.10.2 Exposed Ductwork

Exposed ductwork shall be fabricated from minimum 1.3 mm (18 gauge), Type 304L or 316L, stainless steel with continuously welded joints and seams. Ducts shall be pitched to drain at hoods and low points indicated. Surface

finish shall match hoods.

3.1.10.3 Concealed Ducts Conveying Moisture Laden Air

Concealed ducts conveying moisture laden air shall be fabricated from minimum 1.3 mm (18 gauge), Type 300 series, stainless steel. Joints shall be continuously welded, brazed, or soldered to be liquid tight. Duct shall be pitched to drain at points indicated. Transitions to other metals shall be liquid tight, companion angle bolted and gasketed.

3.1.11 Dust Control

To prevent the accumulation of dust, debris and foreign material during construction, temporary dust control protection shall be provided. The distribution system (supply and return) shall be protected with temporary seal-offs at all inlets and outlets at the end of each day's work. Temporary protection shall remain in place until system is ready for startup.

3.1.12 Insulation

Thickness and application of insulation materials for ductwork, piping, and equipment shall be according to Section 15080 THERMAL INSULATION FOR MECHANICAL SYSTEMS. Outdoor air intake ducts and plenums shall be externally insulated up to the point where the outdoor air reaches the conditioning unit.

3.1.13 Duct Test Holes

Holes with closures or threaded holes with plugs shall be provided in ducts and plenums as indicated or where necessary for the use of pitot tube in balancing the air system. Extensions, complete with cap or plug, shall be provided where the ducts are insulated.

3.1.14 Power Roof Ventilator Mounting

Foamed 13 mm thick, closed-cell, flexible elastomer insulation shall cover width of roof curb mounting flange. Where wood nailers are used, holes shall be pre-drilled for fasteners.

3.1.15 Power Transmission Components Adjustment

V-belts and sheaves shall be tested for proper alignment and tension prior to operation and after 72 hours of operation at final speed. Belts on drive side shall be uniformly loaded, not bouncing. Alignment of direct driven couplings shall be to within 50 percent of manufacturer's maximum allowable range of misalignment.

3.2 FIELD PAINTING AND IDENTIFICATION SYSTEMS

3.2.1 Identification Tags

Identification tags made of brass, engraved laminated plastic, or engraved anodized aluminum, indicating service and item number shall be installed on all valves and dampers. Tags shall be 35 mm minimum diameter and marking shall be stamped or engraved. Indentations shall be black for reading clarity. Tags shall be attached to valves with No. 12 AWG, copper wire,chrome-plated beaded chain or plastic straps designed for that purpose.

3.2.2 Finish Painting and Pipe Color Code Marking

Finish painting of items only primed at the factory, surfaces not specifically noted otherwise, and color code marking for piping shall be as specified in Section 09900 PAINTS AND COATINGS.

3.3 DAMPER ACCEPTANCE TEST

All fire dampers and smoke dampers shall be operated under normal operating conditions, prior to the occupancy of a building to determine that they function properly. Fire dampers equipped with fusible links shall be tested by having the fusible link cut in place. Dynamic fire dampers shall be tested with the air handling and distribution system running. All fire dampers shall be reset with the fusible links replaced after acceptance testing. To ensure optimum operation and performance, the damper must be installed so it is square and free from racking.

3.4 TESTING, ADJUSTING, AND BALANCING

Testing, adjusting, and balancing shall be as specified in Section 15990 TESTING, ADJUSTING, AND BALANCING OF HVAC SYSTEMS. Testing, adjusting, and balancing shall begin only when the air supply and distribution, including controls, has been completed, with the exception of performance tests.

3.5 PERFORMANCE TESTS

After testing, adjusting, and balancing has been completed as specified, each system shall be tested using approved test procedures as a whole to see that all items perform as integral parts of the system and temperatures and conditions are evenly controlled throughout the building. Corrections and adjustments shall be made as necessary to produce the conditions indicated or specified. Capacity tests and general operating tests shall be conducted by an experienced engineer. Tests shall cover a period of not less than 3 days for each system and shall demonstrate that the entire system is functioning according to the specifications. Coincidental chart recordings shall be made at points indicated on the drawings for the duration of the time period and shall record the temperature at space thermostats or space sensors, the humidity at space humidistats or space sensors and the ambient temperature and humidity in a shaded and weather protected area.

3.6 CLEANING AND ADJUSTING

Pipes shall be cleaned free of scale and thoroughly flushed of foreign matter. Inside of air handling units, ducts, plenums, and casing shall be thoroughly cleaned of debris and blown free of small particles of rubbish and dust and then shall be vacuum cleaned before installing outlet faces. Equipment shall be wiped clean, with traces of oil, dust, dirt, or paint spots removed. Temporary filters shall be provided prior to startup of all fans that are operated during construction, and new filters shall be installed after all construction dirt has been removed from the building, and the ducts, plenums, casings, and other items specified have been vacuum cleaned. System shall be maintained in this clean condition until final acceptance. Bearings shall be properly lubricated with oil or grease as recommended by the manufacturer. Belts shall be tightened to proper tension. Control valves and other miscellaneous equipment requiring adjustment shall be adjusted to setting indicated or directed. Fans shall be adjusted to the speed indicated by the manufacturer to meet specified conditions.

3.7 FIELD TRAINING

The Contractor shall conduct a training course for operating and maintenance personnel as designated by the Government. Training shall be provided for a period of 40 hours of normal working time and shall start after the system is functionally complete but prior to the performance tests. The field instruction shall cover all of the items contained in the approved Operating and Maintenance Instructions.

-- End of Section --

SECTION 15950

HEATING, VENTILATING AND AIR CONDITIONING (HVAC) CONTROL SYSTEMS

PART 1 GENERAL

1.1 REFERENCES

The publications listed below form a part of this specification to the extent referenced. The publications are referred to in the text by basic designation only.

AIR MOVEMENT AND CONTROL ASSOCIATION INTERNATIONAL(AMCA)

AMCA 500-D	(1998) Laboratory Methods of Testing Dampers for Rating

NATIONAL ELECTRICAL MANUFACTURERS ASSOCIATION (NEMA)

NEMA 250	(2003) Enclosures for Electrical Equipment (1000 Volts Maximum)

NATIONAL FIRE PROTECTION ASSOCIATION (NFPA)

NFPA 90A	(2002) Installation of Air Conditioning and Ventilating Systems

UNDERWRITERS LABORATORIES (UL)

UL 268A	(1998; Rev thru Apr 2003) Smoke Detectors for Duct Application
UL 508	(1999; Rev thru Dec 2003) Industrial Control Equipment
UL 555S	(1999; Rev thru Apr 2003) Smoke Dampers

1.2 SUBMITTALS

Items with a "G" designation require Government approval; items not having a "G" designation are for information only. The following is submitted in accordance with Section 01335 SUBMITTAL PROCEDURES FOR DESIGN/BUILD PROJECT. It is included in the Design Analysis for this project.

SD-03 Product Data

HVAC Control System; G AED

Six copies of a list of service organizations qualified to service the HVAC control system. The list shall include the service organization name, address, technical point of contact and telephone number, and contractual point of contact and telephone number.

Equipment Compliance Booklet; G AED

An HVAC control system equipment compliance booklet (ECB) in

indexed booklet form with numbered tabs separating the information on each device. It shall consist of, but not be limited to, data sheets and catalog cuts which document compliance of all devices and components with the specifications. The ECB shall be indexed in alphabetical order by the unique identifiers. Devices and components which do not have unique identifiers shall follow the devices and components with unique identifiers and shall be indexed in alphabetical order according to their functional name. The ECB shall include a bill of materials for each HVAC control system. The bill of materials shall function as the table of contents for the ECB and shall include the device's unique identifier, device function, manufacturer, model/part/catalog number used for ordering, and tab number where the device information is located in the ECB.

Performance Verification Test Procedures; G AED

Six copies of the HVAC control system performance verification test procedures, in indexed booklet form, 7 days before the Contractor's scheduled test dates. The performance verification test procedures shall refer to the devices by their unique identifiers as shown, shall explain, step-by-step, the actions and expected results that will demonstrate that the HVAC control system performs in accordance with the sequences of operation. An HVAC control system performance verification test equipment list shall be included that lists the equipment to be used during performance verification testing. The list shall include manufacturer name, model number, equipment function, the date of the latest calibration, and the results of the latest calibration.

Training Course Requirements; G AED

Six copies of HVAC control system training course material 7 days prior to the scheduled start of the training course. The training course material shall include the operation manual, maintenance and repair manual, and paper copies of overheads used in the course. An HVAC control system training course, in outline form, with a proposed time schedule. Approval of the planned training schedule shall be obtained from the Government at least 14 days prior to the start of the training.

SD-06 Test Reports

Commissioning Report; G AED

Copies of the HVAC control system commissioning report, in indexed booklet form, within 30 days after completion of the system commissioning. The commissioning report shall include data collected during the HVAC control system commissioning and shall follow the format of the commissioning procedures. The commissioning report shall include all controller and time clock checksheets with final values listed for all parameters, setpoints, P, I, D setting constants, calibration data for all devices, and results of adjustments.

Performance Verification Test; G AED

Six copies of the HVAC control system performance verification test report, in indexed booklet form, within 7 days after

completion of the test. The HVAC control system performance verification test report shall include data collected during the HVAC control system performance verification test. The original copies of data gathered during the performance verification test shall be turned over to the Government after Government approval of the test results.

SD-10 Operation and Maintenance Data

Operation Manual; G AED

Maintenance and Repair Manual; G AED

Provide copies of the HVAC control system operation manual and HVAC control system maintenance and repair manual for each HVAC control system before the date scheduled for the training course.

Operation and Maintenance Manuals shall be as required in Section 01060: SPECIAL CLAUSE entitled OPERATION AND MAINTENANCE (O&M) DATA FOR EQUIPMENT AND SYSTEMS, and include the additional requirements as specified hereinafter. In the event of a conflict, the more detailed requirement shall apply.

1.3 GENERAL REQUIREMENTS

1.3.1 Verification of Dimensions

The Contractor shall become familiar with all details of the work, shall verify all dimensions in the field, and shall advise the Government of any discrepancy before performing any work.

1.3.2 Drawings

Because of the small scale of the drawings, it is not possible to indicate all offsets, fittings, and accessories that may be required. The Contractor shall investigate the mechanical, electrical, and finish conditions that could affect the work to be performed, shall arrange such work accordingly, and shall furnish all work necessary to meet such conditions.

1.4 DELIVERY AND STORAGE

1.5 OPERATION MANUAL

An HVAC control system operation manual for each HVAC control system, in indexed booklet form, shall be provided. The operation manual shall include the HVAC control system sequence of operation, and procedures for the HVAC system start-up, operation and shut-down. The operation manual shall include as-built HVAC control system detail drawings. The operation manual shall include the as-built controller configuration checksheets, the as-built time clock configuration checksheet, the HVAC control system front panel description, the procedures for changing HVAC system controller setpoints, the procedures for gaining manual control of processes, the time clock manufacturer's manual control of processes, the time clock manufacturer's operation manual, and the controller manufacturer's operation manual.

a. The HVAC control system front panel description shall explain the meaning and use of the lights, switches, gauges, and controller

displays located in the front panel. Each light, switch, gauge, and display described shall be numbered and referenced to a drawing of the front panel.

b. The procedures for changing HVAC system controller setpoints shall describe the step-by-step procedures required to change: the process variable setpoints of controllers, the alarm setpoints of controllers, the controller bias settings, and controller setpoint reset schedules.

c. The procedures for gaining manual control of processes shall describe step-by-step procedures required to gain manual control of devices and manually adjust their positions.

1.6 MAINTENANCE AND REPAIR MANUAL

An HVAC control system maintenance and repair manual for each HVAC control system, in indexed booklet form in hardback binders, shall be provided. The maintenance and repair manual shall include the routine maintenance checklist, a recommended repair methods list, a list of recommended maintenance and repair tools, the qualified service organization list, the as-built commissioning procedures and report, the as-built performance verification test procedures and report, and the as-built equipment data booklet (EDB).

a. The routine maintenance checklist shall be arranged in a columnar format. The first column shall list all devices listed in the equipment compliance booklet (ECB), the second column shall state the maintenance activity or state no maintenance required, the third column shall state the frequency of the maintenance activity, and the fourth column for additional comments or reference.

b. The recommended repair methods list shall be arranged in a columnar format and shall list all devices in the equipment compliance booklet (ECB) and state the guidance on recommended repair methods, either field repair, factory repair, or whole-item replacement.

c. The as-built equipment data booklet (EDB) shall include the equipment compliance booklet (ECB) and all manufacturer supplied user manuals and information.

d. If the operation manual and the maintenance and repair manual are provided in a common volume, they shall be clearly differentiated and separately indexed.

PART 2 PRODUCTS

2.1 MATERIAL AND EQUIPMENT

Material and equipment shall be standard products of a manufacturer regularly engaged in the manufacturing of such products which are of a similar material, design and workmanship. The standard products shall have been in satisfactory commercial or industrial use for 2 years prior to bid opening. The 2-year use shall include applications of equipment and materials under similar circumstances and of similar size. The 2 years experience must be satisfactorily completed by a product which has been

sold or is offered for sale on the commercial market through advertisements, manufacturers' catalogs, or brochures. Products having less than a 2-year field service record will be acceptable if a certified record of satisfactory field operation, for not less than 6000 hours exclusive of the manufacturer's factory tests, can be shown. The equipment items shall be supported by a service organization. The Contractor shall submit a certified list of qualified permanent service organizations and qualifications. These service organizations shall be reasonably convenient to the equipment on a regular and emergency basis during the warranty period.

2.2 GENERAL EQUIPMENT REQUIREMENTS

2.2.1 Electrical and Electronic Devices

All electrical, electronic, and electro-pneumatic devices not located within an HVAC control panel shall have a NEMA Type 1 enclosure in accordance with NEMA 250 unless otherwise shown.

2.2.2 Ambient Temperature Limits

Ambient Temperature Actuators and positive positioners, and transmitters shall operate within temperature limit ratings of 5 to 60 degrees C. All panel-mounted instruments shall operate within limit ratings of 2 to 50 degrees C and 10 percent to 95 percent relative humidity, noncondensing. All devices installed outdoors shall operate within limit ratings of minus 40 to plus 65 degrees C.

2.3 MATERIALS

2.3.1 Wiring

2.3.1.1 Terminal Blocks

Terminal blocks shall be insulated, modular, feed-through, clamp style with recessed captive screw-type clamping mechanism, shall be suitable for rail mounting, and shall have end plates and partition plates for separation or shall have enclosed sides.

2.3.1.2 Control Wiring for 240-Volt Circuits

Control wiring for 240-volt circuits shall be 18 AWG minimum, stranded copper and shall be rated for 300-volt service.

2.3.1.3 Wiring for 240-Volt Circuits

Wiring for 240-volt circuits shall be 18 AWG minimum, stranded copper and shall be rated for 600-volt service.

2.3.1.4 Nonconducting Wiring Duct

Nonconducting wiring duct in control panels shall have wiring duct in control panels shall have slotted sides, snap-on duct covers, have slotted sides, snap-on duct covers, fittings for connecting ducts, mounting clips for securing ducts, and wire-retaining clips.

2.3.1.5 Transformers

Step-down transformers shall be utilized where control equipment operates

at lower than line circuit voltage. Transformers, other than transformers in bridge circuits, shall have primaries wound for the voltage available and secondaries wound for the correct control circuit voltage. Transformers shall be sized so that the connected load is 80 percent of the rated capacity or less. Transformers shall conform to UL 508.

2.4 ACTUATORS

Actuators shall be electric or electronic as shown and shall be provided with mounting and connecting hardware. Actuators shall fail to their spring-return positions on signal or power failure. The actuator stroke shall be limited in the direction of power stroke by an adjustable stop. Actuators shall have a visible position indicator. Actuators shall smoothly open or close the devices to which they are applied and shall have a full stroke response time of 100 to 150 seconds or less. Electric or electronic actuators operating in series shall have an auxiliary actuator driver. Electric or electronic actuators used in sequencing applications shall have an adjustable operating range and start point.

2.5 DAMPERS

2.5.1 Damper Assembly

A single damper section shall have blades no longer than 1.2 m and shall be no higher than 1.8 m. Maximum damper blade width shall be 203 mm. Larger sizes shall be made from a combination of sections. Dampers shall be steel, or other materials where shown. Flat blades shall be made rigid by folding the edges. All blade-operating linkages shall be within the frame so that blade-connecting devices within the same damper section will not be located directly in the air stream. Damper axles shall be 13 mm (minimum) plated steel rods supported in the damper frame by non corrosive bearings. Pressure drop through dampers shall not exceed 10 Pa at 5 m/s in the wide-open position. Frames shall not be less than 35 mm in width. Dampers shall be tested in accordance with AMCA 500-D or EN 1751.

2.5.1.1 Damper Types

Dampers shall be parallel blade type.

2.5.2 Outside-Air, Return-Air, and Relief-Air Dampers

The dampers shall be provided where shown. Blades shall have interlocking edges and shall be provided with compressible seals at points of contact. The channel frames of the dampers shall be provided with jamb seals to minimize air leakage. Dampers shall not leak in excess of 102 L/s per square meter at 1,000 Pa (gauge) static pressure when closed. Dampers shall be rated at not less than 10 m/s air velocity.

2.5.3 Smoke Dampers

Smoke-damper and actuator assembly required per NFPA 90A shall meet the Class II leakage requirements of UL 555S. Dampers shall be rated at not less than 10 m/s air velocity.

2.5.4 Damper End Switches

Each end switch shall be a hermetically-sealed switch with a trip lever and over-travel mechanism. The switch enclosure shall be suitable for mounting on the duct exterior and shall permit setting the position of the trip

lever that actuates the switch. The trip lever shall be aligned with the damper blade.

2.6 DUCT SMOKE DETECTORS

Duct smoke detectors shall conform to the requirements of UL 268A. Duct smoke detectors shall have perforated sampling tubes extended into the air duct. Detector circuitry shall be mounted in a metallic enclosure exterior to the duct. Detectors shall have manual reset. Detectors shall be rated for air velocities that include air flows between 2.5 and 20 m/s . Detectors shall be powered from the HVAC control panel. Detectors shall have two sets of normally open alarm contacts and two sets of normally closed alarm contacts. Detectors shall be connected to the building fire alarm panel for alarm initiation. A remote annunciation lamp and accessible remote reset switch shall be provided for duct detectors that are mounted eight feet or more above the finished floor and for detectors that are not readily visible. Remote lamps and switches as well as each affected fan unit shall be properly identified in etched rigid plastic placards.

2.7 THERMOSTATS

Thermostat ranges shall be selected so that the setpoint is adjustable without tools between plus or minus 5 degrees C of the setpoint shown. Thermostats shall be electronic or electric.

2.7.1 Nonmodulating Room Thermostats

Contacts shall be single-pole double-throw (SPDT), hermetically sealed, and wired to identified terminals. Maximum differential shall be 2.75 degrees C. Room thermostats shall be enclosed with separate locking covers (guards). Thermostats shall have manual switches as required by the application.

2.7.2 Microprocessor-Based Room Thermostats

Microprocessor-based thermostats shall have built-in keypads for scheduling of day and night temperature settings. When out of the scheduling mode, thermostats shall have continuous display of time, with AM and PM indicator, continuous display of day of week, and either continuous display of room temperature with display of temperature setpoint on demand, or continuous display of temperature setpoint with display of room temperature on demand. In the programmable mode, the display shall be used for interrogating time program ON-OFF setpoints for all 7 days of the week. The time program shall allow 2 separate temperature-setback intervals per day. The thermostats shall have a means for temporary and manual override of the program schedule, with automatic program restoration on the following day. Thermostats shall have a replaceable battery to maintain the timing and maintain the schedule in memory for 1 year in the event of a power outage. Maximum differential shall be 1 degree C.

2.7.3 Modulating Room Thermostats

Modulating room thermostats shall have either one output signal, two output signals operating in unison, or two output signals operating in sequence, as required for the application. Each thermostat shall have an adjustable throttling range of 2 to 4 degrees C for each output. Room thermostats shall be enclosed with separate locking covers (guard

2.8 CONTROL DEVICES AND ACCESSORIES

Control device and accessory input impedance shall not exceed 250 ohms.

2.8.1 Function Modules

Function modules shall accept mAdc analog input signals to produce mAdc analog output signals or contact output signals. Modules shall have zero and span adjustments for analog outputs, and setpoint adjustments for contact outputs. Module output span accuracy shall be plus or minus 1 percent of input span. Modules shall be rail-mounted as shown. Power consumption shall be not greater than 5 watts.

2.8.1.1 Minimum-Position Switch and Temperature-Setpoint Device

Minimum-position switch and temperature-setpoint device shall accept a 1000 ohms potentiometer input and shall produce a steady analog output. In temperature setpoint applications the potentiometer shall be single-turn, suitable for wall mounting, enclosed in a locking metal or heavy duty plastic enclosure and shall have a graduated dial corresponding to the range of the setpoint adjustment. In a minimum position switch application the potentiometer shall be mounted on or internal to the minimum position switch. The device shall have its input signal electrically or optically isolated from output.

2.8.2 Relays

Relays shall be 2-pole, double-throw (2PDT)and shall have an enclosed 220-Vac coil with 8 pin blade connectors, and a matching rail-mounted socket. Power consumption shall not be greater than 3 watts.

2.9 PILOT LIGHTS AND MANUAL SWITCHES

Pilot lights and switches shall be rectangular devices arranged in a horizontal matrix as shown. Momentary switches shall be non-illuminated. Interlocking switches shall have separately illuminated sections. Split legend lights shall have separately illuminated sections. Device illumination shall be by light-emitting diode or neon lamp.

2.10 HVAC SYSTEM CONTROL PANELS

2.10.1 Panel Assembly

The control panel shall be factory assembled and shipped to the job site as a single unit. The panel shall be fabricated as shown, and the devices shall be mounted as shown. Each panel shall be fabricated as a bottom-entry connection point for control-system electric power, control-system main air source, control-system wiring, pneumatic tubing, interconnection of control systems, interconnection of starters and external shutdown devices. Each panel shall have an operating temperature rise of not greater than 11 degrees C above an ambient temperature of 38 degrees C.

2.10.2 Panel Electrical Requirements

Each control panel shall be powered by nominal 220 volts ac, terminating at the panel on terminal blocks. Instrument cases shall be grounded. Interior panel, interior door, and exterior panel enclosure shall be grounded.

2.10.3 Enclosure

The enclosure for each panel shall be a NEMA 12 single-door wall-mounted box conforming to NEMA 250, with continuous hinged and gasketed exterior door with print pocket and key lock, continuous hinged interior door, interior back panel, and ventilation louvers in back surface as shown. Inside finish shall be white enamel, and outside finish shall be gray primer over phosphatized surfaces.

2.10.4 Mounting and Labeling

Controllers, pilot lights, switches, IP's, and pressure gauge shall be mounted on the interior door as shown. Fuses and duplex outlet shall be mounted on the interior of the cabinet. All other components housed in the panel shall be mounted on the interior back panel surface of the enclosure, behind the door on rails as shown. Controllers and gauges mounted on the front of the inner door shall be identified by a plastic or metal nameplate as shown that is mechanically attached to the panel. Function modules, relays, timeclocks, and other devices interior to the panel shall be identified by a plastic or metal nameplate that is mechanically attached to the panel. The nameplate shall have the inscription as shown. Lettering shall be cut or stamped into the nameplate to a depth of not less than 0.4 mm, and shall show a contrasting color, produced by filling with enamel or lacquer or by the use of a laminated material. Painting of lettering directly on the surface of the interior door or panel is not permitted.

2.10.5 Wiring

2.10.5.1 Panel Wiring

Interconnections Wiring shall be installed in wiring ducts in such a way that devices can be added or replaced without disturbing wiring that is not affected by the change. Wiring to all devices shall have a 100 mm wiring loop in the horizontal wiring duct at each wiring connection. There shall be no wiring splices within the control panel. All interconnections required for power or signals shall be made on device terminals or panel terminal blocks, with not more than two wires connected to a terminal.

2.10.5.2 Panel Terminal Blocks

Terminal blocks shall be arranged in groups as shown. Instrument signal grounds at the same ground reference level shall end at a grounding terminal for connection to a common ground point. Wiring-shield grounds at the same reference level shall end at a grounding terminal for connection to a common ground point. Grounding terminal blocks shall be identified by reference level.

2.10.5.3 Wiring Identification

All wiring connected to time clocks and function modules shall be identified by function and polarity with full word identifiers, i.e., process variable input, remote setpoint input and control output.

PART 3 EXECUTION

3.1 GENERAL INSTALLATION CRITERIA

The HVAC control system shall be installed and ready for operation, as

specified and shown. Dielectric isolation shall be provided where dissimilar metals are used for connection and support. Penetrations through and mounting holes in the building exterior shall be made watertight. The HVAC control system installation shall provide clearance for control system maintenance by maintaining access space between coils, access space to mixed-air plenums, and other access space required to calibrate, remove, repair, or replace control system devices. The control system installation shall not interfere with the clearance requirements for mechanical installation shall not interfere with the clearance requirements for mechanical and electrical system maintenance.

3.1.1 Device Mounting Criteria

Devices mounted in or on piping or ductwork, on building surfaces, in mechanical/electrical spaces, or in occupied space ceilings shall be installed in accordance with manufacturer's recommendations and as shown. Control devices to be installed in piping and ductwork shall be provided with all required gaskets, flanges, thermal compounds, insulation, piping, fittings, and manual valves for shutoff, equalization, purging, and calibration. Strap-on temperature sensing elements shall not be used except as specified.

3.1.2 Wiring Criteria

Wiring external to control panels, including low-voltage wiring, shall be installed in metallic raceways. Wiring shall be installed without splices between control devices and HVAC control panels. Cables and conductors shall be tagged at both ends, with the identifier shown on the shop drawings, in accordance with the requirements of Section 16402 INTERIOR DISTRIBUTION SYSTEM.

3.2 CONTROL SYSTEM INSTALLATION

3.2.1 Damper Actuators

Actuators shall not be mounted in the air stream. Multiple actuators operating a common damper shall be connected to a common drive shaft. Actuators shall be installed so that their action shall seal the damper to the extent required to maintain leakage at or below the specified rate and shall move the blades smoothly.

3.2.2 Room-Instrument Mounting

Room instruments, such as wall mounted thermostats, shall be mounted 1.5 m above the floor unless otherwise noted. Temperature setpoint device shall be recess mounted.

3.2.3 Smoke Detectors

Duct smoke detectors shall be provided in supply and return air ducts in accordance with NFPA 90A .

3.2.4 Manual Emergency Fan Shutdown Switches

Manual emergency fan shutdown switches shall be provided for air distribution fans in accordance with NFPA 90A. Switches shall be the manual-reset type. Switches shall be located and mounted in an accessible manner, approximately 1.2 m above the finished floor. Switches shall be properly identified in etched rigid plastic placards.

3.3 CONTROL SEQUENCES OF OPERATION

3.3.1 System Requirements

Control sequences are indicated on the drawings.

3.4 BALANCING, COMMISSIONING, AND TESTING

3.4.1 Coordination with HVAC System Balancing

Commissioning of the control system, except for tuning of controllers, shall be performed prior to or simultaneous with HVAC system balancing. The Contractor shall tune the HVAC control system after all air-system and hydronic-system balancing has been completed, minimum damper positions set and a report has been issued.

3.4.2 Control System Calibration, Adjustments, and Commissioning

Control system commissioning shall be performed for each HVAC system, using test plans and procedures previously approved by the Government . The Contractor shall provide all personnel, equipment, instrumentation, and supplies necessary to perform commissioning and testing of the HVAC control system. All instrumentation and controls shall be calibrated and the specified accuracy shall be verified using test equipment with calibration traceable to NIST standards. Wiring shall be tested for continuity and for ground, open, and short circuits. Tubing systems shall be tested for leaks. Mechanical control devices shall be adjusted to operate as specified. HVAC control panels shall be pretested off-site as a functioning assembly ready for field connections, calibration, adjustment, and commissioning of the operational HVAC control system. Written notification of any planned commissioning or testing of the HVAC Control systems shall be given to the Government at least 14 calendar days in advance.

3.4.3 Performance Verification Test

The Contractor shall demonstrate compliance of the HVAC control system with the contract documents. Using test plans and procedures previously approved by the Government, the Contractor shall demonstrate all physical and functional requirements of the project. The performance verification test shall show, step-by-step, the actions and results demonstrating that the control systems perform in accordance with the sequences of operation. The performance verification test shall not be started until after receipt by the Contractor of written permission by the Government, based on Government approval of the commissioning report and completion of balancing. The tests shall not be conducted during scheduled seasonal off-periods of base heating and cooling systems.

3.4.4 Posted and Panel Instructions

Posted and panel instructions, showing the final installed conditions, shall be provided for each system. The posted instructions shall consist of half-size laminated drawings and shall include the control system schematic, equipment schedule, ladder diagram, sequence of operation, panel arrangement drawings, wiring diagram, and valve and damper schedules. The posted instructions shall be permanently affixed, by mechanical means, to a

wall near the control panel. Panel instructions shall consist of laminated letter-size sheets and shall include a routine maintenance checklist and controller configuration check sheets with final configuration record for each controller. Panel instructions and one copy of the operation and maintenance manuals, previously described herein, shall be placed inside each control panel.

3.5 TRAINING

3.5.1 Training-Course Requirements

A training course shall be conducted for 2 operating staff members designated by the Government. The training period, for a total of 40 hours of normal working time, shall be conducted within 30 days after successful completion of the performance verification test. The training course shall be conducted at the project site. Audiovisual equipment and 2 sets of all other training materials and supplies shall be provided. A training day is defined as 8 hours of classroom instruction, including two 15-minute breaks and excluding lunchtime, Monday through Friday, during the daytime shift in effect at the training facility.

3.5.2 Training-Course Content

For guidance in planning the required instruction, the Contractor shall assume that attendees will have a high school education or equivalent, and are familiar with HVAC systems. The training course shall cover all of the material contained in the operating and maintenance instructions, the layout and location of each HVAC control panel, the layout of one of each type of unitary equipment and the locations of each, the location of each system-control device external to the panels, the location of the compressed-air station, preventive maintenance, troubleshooting, diagnostics, calibration, adjustment, commissioning, tuning, and repair procedures. Typical systems and similar systems may be treated as a group, with instruction on the physical layout of one such system. The results of the performance verification test and the calibration, adjustment and commissioning report shall be presented as benchmarks of HVAC control-system performance by which to measure operation and maintenance effectiveness.

-- End of Section --

SECTION 15990

TESTING, ADJUSTING, AND BALANCING OF HVAC SYSTEMS

PART 1 GENERAL

1.1 REFERENCES

The publications listed below form a part of this specification to the extent referenced. The publications are referred to in the text by basic designation only.

ASSOCIATED AIR BALANCE COUNCIL (AABC)

AABC MN-1	(2002) National Standards for Total System Balance

NATIONAL ENVIRONMENTAL BALANCING BUREAU (NEBB)

NEBB TABES	(2005) Procedural Standards for Testing, Adjusting, Balancing of Environmental Systems

SHEET METAL AND AIR CONDITIONING CONTRACTORS' NATIONAL ASSOCIATION (SMACNA)

SMACNA HVACTAB	(2002, 3rd Ed) HVAC Systems - Testing, Adjusting and Balancing

1.2 SUBMITTALS

Government approval is required for submittals with a "G" designation; submittals not having a "G" designation are for information only. When used, a designation following the "G" designation identifies the office that will review the submittal for the Government. Submit the following in accordance with Section 01330 SUBMITTAL PROCEDURES

SD-03 Product Data

TAB Related HVAC Submittals; G AED

A list of the TAB Related HVAC Submittals no later than 7 days after the approval of the TAB Specialist.

TAB Procedures; G AED

Proposed procedures for TAB, submitted with the TAB Schematic Drawings and Report Forms.

Calibration; G AED

List of each instrument to be used during TAB, stating calibration requirements required or recommended by both the TAB Standard and the instrument manufacturer and the actual calibration history of the instrument, submitted with the TAB Procedures. The calibration history shall include dates

calibrated, the qualifications of the calibration laboratory, and the calibration procedures used.

Systems Readiness Check; G AED

Proposed date and time to begin the Systems Readiness Check no later than 7 days prior to the start of the Systems Readiness Check.

TAB Execution; G AED

Proposed date and time to begin field measurements, making adjustments, etc., for the TAB Report, submitted with the Systems Readiness Check Report.

TAB Verification; G AED

Proposed date and time to begin the TAB Verification, submitted with the TAB Report.

SD-06 Test Reports

Design Review Report; G AED

A copy of the Design Review Report, no later than 7 days after approval of the TAB Firm and the TAB Specialist.

Systems Readiness Check; G AED

A copy of completed checklists for each system, each signed by the TAB Specialist, at least 7 days prior to the start of TAB Execution. All items in the Systems Readiness Check Report shall be signed by the TAB Specialist and shall bear the seal of the Professional Society or National Association used as the TAB Standard.

TAB Report; G AED

Three copies of the completed TAB Reports, no later that 7 days after the execution of TAB. All items in the TAB Report shall be signed by the TAB Specialist and shall bear the seal of the Professional Society or National Association used as the TAB Standard.

TAB Verification Report; G AED

Three copies of the completed TAB Verification Report, no later that 7 days after the execution of TAB Verification. All items in the TAB Verification Report shall be signed by the TAB Specialist and shall bear the seal of the Professional Society or National Association used as the TAB Standard.

1.3 TAB STANDARD

TAB shall be performed in accordance with the requirements of the standard under which the TAB Firm's qualifications are approved, i.e., AABC MN-1, NEBB TABES, or SMACNA HVACTAB unless otherwise specified herein. All recommendations and suggested practices contained in the TAB Standard shall be considered mandatory. The provisions of the TAB Standard, including

checklists, report forms, etc., shall, as nearly as practical, be used to satisfy the Contract requirements. The TAB Standard shall be used for all aspects of TAB, including qualifications for the TAB Firm and Specialist and calibration of TAB instruments. Where the instrument manufacturer calibration recommendations are more stringent than those listed in the TAB Standard, the manufacturer's recommendations shall be adhered to. All quality assurance provisions of the TAB Standard such as performance guarantees shall be part of this contract. For systems or system components not covered in the TAB Standard, TAB procedures shall be developed by the TAB Specialist. Where new procedures, requirements, etc., applicable to the Contract requirements have been published or adopted by the body responsible for the TAB Standard used, the requirements and recommendations contained in these procedures and requirements shall be considered mandatory.

1.4 TAB SPECIALIST RESPONSIBILITIES

All TAB work specified herein and in related sections shall be performed under the direct guidance of the TAB Specialist.

PART 2 PRODUCTS (Not Applicable)

PART 3 EXECUTION

3.1 DESIGN REVIEW

The TAB Specialist shall review the Contract Plans and Specifications and advise the Government of any deficiencies that would prevent the HVAC systems from effectively operating in accordance with the sequence of operation specified or prevent the effective and accurate TAB of the system. The TAB Specialist shall provide a Design Review Report individually listing each deficiency and the corresponding proposed corrective action necessary for proper system operation.

3.2 TAB RELATED HVAC SUBMITTALS

The TAB Specialist shall prepare a list of the submittals from the Contract Submittal Register that relate to the successful accomplishment of all HVAC TAB. The submittals identified on this list shall be accompanied by a letter of approval signed and dated by the TAB Specialist when submitted. The TAB Specialist shall also ensure that the location and details of ports, terminals, connections, etc., necessary to perform TAB are identified on the submittals.

3.3 TAB SCHEMATIC DRAWINGS AND REPORT FORMS

A schematic drawing showing each system component, including balancing devices, shall be provided for each system. Each drawing shall be accompanied by a copy of all report forms required by the TAB Standard used for that system. Where applicable, the acceptable range of operation or appropriate setting for each component shall be included on the forms or as an attachment to the forms. The schematic drawings shall identify all testing points and cross reference these points to the report forms and procedures.

3.4 TESTING, ADJUSTING, AND BALANCING

3.4.1 TAB Procedures

Step by step procedures for each measurement required during TAB Execution shall be provided. The procedures shall be oriented such that there is a separate section for each system. The procedures shall include measures to ensure that each system performs as specified in all operating modes, interactions with other components (such as exhaust fans, kitchen hoods, relief vents, etc.) and systems, and with all seasonal operating differences, diversity, simulated loads, and pressure relationships required.

3.4.2 Systems Readiness Check

The TAB Specialist shall inspect each system to ensure that it is complete, including installation and operation of controls, and that all aspects of the facility that have any bearing on the HVAC systems, including installation of ceilings, walls, windows, doors, and partitions, are complete to the extent that TAB results will not be affected by any detail or touch-up work remaining. The TAB Specialist shall also verify that all items such as ductwork and piping ports, terminals, connections, etc., necessary to perform TAB shall be complete during the Systems Readiness Check.

3.4.3 Preparation of TAB Report

Preparation of the TAB Report shall begin only when the Systems Readiness Report has been approved. The Report shall be oriented so that there is a separate section for each system. The Report shall include a copy of the appropriate approved Schematic Drawings and TAB Related Submittals, such as pump curves, fan curves, etc., along with the completed report forms for each system. The operating points measured during successful TAB Execution and the theoretical operating points listed in the approved submittals shall be marked on the performance curves and tables. Where possible, adjustments shall be made using an "industry standard" technique which would result in the greatest energy savings, such as adjusting the speed of a fan instead of throttling the flow. Any deficiencies outside of the realm of normal adjustments and balancing during TAB Execution shall be noted along with a description of corrective action performed to bring the measurement into the specified range. If, for any reason, the TAB Specialist determines during TAB Execution that any Contract requirement cannot be met, the TAB Specialist shall immediately provide a written description of the deficiency and the corresponding proposed corrective action necessary for proper system operation to the Government.

3.4.4 TAB Verification

The TAB Specialist shall recheck ten percent of the measurements listed in the Tab Report and prepare a TAB Verification Report. The measurements selected for verification and the individuals that witness the verification will be selected by the Government's Representative (COR). The measurements will be recorded in the same manner as required for the TAB Report. All measurements that fall outside the acceptable operating range specified shall be accompanied by an explanation as to why the measurement does not correlate with that listed in the TAB Report and a description of corrective action performed to bring the measurement into the specified range. The TAB Specialist shall update the original TAB report to reflect any changes or differences noted in the TAB verification report and submit

the updated TAB report. If over 20 percent of the measurements selected by the COR for verification fall outside of the acceptable operating range specified, the COR will select an additional ten percent for verification. If over 20 percent of the total tested (including both test groups) fall outside of the acceptable range, the TAB Report shall be considered invalid and all contract TAB work shall be repeated beginning with the Systems Readiness Check.

3.4.5 Marking of Setting

Following approval of TAB Verification Report, the setting of all HVAC adjustment devices including valves, splitters, and dampers shall be permanently marked by the TAB Specialist so that adjustment can be restored if disturbed at any time.

3.4.6 Identification of Test Ports

The TAB Specialist shall permanently and legibly identify the location points of duct test ports. If the ductwork has exterior insulation, the identification shall be made on the exterior side of the insulation. All penetrations through ductwork and ductwork insulation shall be sealed to prevent air leakage or to maintain integrity of vapor barrier.

-- End of Section --

SECTION 16050

BASIC ELECTRICAL MATERIALS AND METHODS

PART 1 GENERAL

1.1 REFERENCES

The publications listed below form a part of this specification to the extent referenced. The publications are referred to in the text by the basic designation only.

Unless noted otherwise, all material used shall be in compliance with the requirements of the applicable German (DIN) Standards. In the event DIN Standard material is unavailable, contractor may then select comparable British Standard (BS), or Underwriters Laboratories Inc. (UL) listed material. Equipment enclosure types shall be in compliance with the National Electrical Manufacturer's Association (NEMA) or the International Electro-Technical Committee (IEC) standards. Material and equipment installed under this contract shall be for the appropriate application.

ASTM INTERNATIONAL (ASTM)

ASTM D 709	(2000) Laminated Thermosetting Materials

U.S. NATIONAL ARCHIVES AND RECORDS ADMINISTRATION (NARA)

29 CFR 1910.147	Control of Hazardous Energy (Lock Out/Tag Out)

INSTITUTE OF ELECTRICAL AND ELECTRONICS ENGINEERS (IEEE)

IEEE Std 100	(1997) IEEE Standard Dictionary of Electrical and Electronics Terms
IEEE C2	(2002) National Electrical Safety Code

NATIONAL ELECTRICAL MANUFACTURERS ASSOCIATION (NEMA)

NEMA C57.12.28	(1999) Pad-Mounted Equipment - Enclosure Integrity
NEMA ICS 6	(1993; R 2001) Industrial Control and Systems, Enclosures

NATIONAL FIRE PROTECTION ASSOCIATION (NFPA)

NFPA 70	(2005) National Electrical Code

1.2 DEFINITIONS

a. Unless otherwise specified or indicated, electrical and electronics terms used in these specifications, and on the drawings, shall be as defined in IEEE Std 100 .

b. The technical sections referred to herein are those specification sections that describe products, installation procedures, and

equipment operations and that refer to this section for detailed description of submittal types.

c. The technical paragraphs referred to herein are those paragraphs in PART 2 - PRODUCTS and PART 3 - EXECUTION of the technical sections that describe products, systems, installation procedures, equipment, and test methods.

1.3 ELECTRICAL CHARACTERISTICS

Electrical characteristics for this project shall be 15 kV primary, three phase, 50 Hz, and 380/220 volts secondary, three phase, four wire. Final connections to the power distribution system shall be made by the Contractor as directed by the Government.

1.4 SUBMITTALS

Government approval is required for submittals with a "G" designation; submittals not having a "G" designation are for information only. When used, a designation following the "G" designation identifies the office that will review the submittal for the Government. The following shall be submitted in accordance with Section 01330 SUBMITTAL PROCEDURES:

SD-02 Shop Drawings; G

Submit drawings a minimum of 594 by 841 mm in size using a minimum scale of one mm per 100 mm, except as specified otherwise. Include wiring diagrams and installation details of equipment indicating proposed location, layout and arrangement, control panels, accessories, piping, ductwork, and other items that must be shown to ensure a coordinated installation. Wiring diagrams shall identify circuit terminals and indicate the internal wiring for each item of equipment and the interconnection between each item of equipment. Drawings shall indicate adequate clearance for operation, maintenance, and replacement of operating equipment devices.

SD-03 Product Data; G

Submittals for each manufactured item shall be current manufacturer's descriptive literature of cataloged products, equipment drawings, diagrams, performance and characteristic curves, and catalog cuts. Handwritten and typed modifications and other notations not part of the manufacturer's preprinted data will result in the rejection of the submittal. Should manufacturer's data require supplemental information for clarification, the supplemental information shall be submitted as specified for certificates of compliance.

Manufacturer's Instructions: Where installation procedures or part of the installation procedures are required to be in accordance with manufacturer's instructions, submit printed copies of those instructions prior to installation. Installation of the item shall not proceed until manufacturer's instructions are received. Failure to submit manufacturer's instructions shall be cause for rejection of the equipment or material.

1.5 SIGNAGE

Text to be in English and Afghan wherever signage is required.

1.6 QUALITY ASSURANCE

1.6.1 Material and Equipment Qualifications

Provide materials and equipment that are products of manufacturers regularly engaged in the production of such products which are of equal material, design and workmanship. Products shall have been in satisfactory commercial or industrial use for 2 years prior to bid opening. The 2-year period shall include applications of equipment and materials under similar circumstances and of similar size. The product shall have been on sale on the commercial market through advertisements, manufacturers' catalogs, or brochures during the 2-year period. Where two or more items of the same class of equipment are required, these items shall be products of a single manufacturer; however, the component parts of the item need not be the products of the same manufacturer unless stated in the technical section.

1.6.2 Regulatory Requirements

Equipment, materials, installation, and workmanship shall be in accordance with the mandatory and advisory provisions of NFPA 70.

1.6.3 Alternative Qualifications

Products having less than a 2-year field service record will be acceptable if a certified record of satisfactory field operation for not less than 6000 hours, exclusive of the manufacturers' factory or laboratory tests, is furnished.

1.6.4 Service Support

The equipment items shall be supported by service organizations which are reasonably convenient to the equipment installation in order to render satisfactory service to the equipment on a regular and emergency basis during the warranty period of the contract.

1.6.5 Manufacturer's Nameplate

Each item of equipment shall have a nameplate bearing the manufacturer's name, address, model number, and serial number securely affixed in a conspicuous place; the nameplate of the distributing agent will not be acceptable.

1.6.6 Modification of References

In each of the publications referred to herein, consider the advisory provisions to be mandatory, as though the word, "shall" had been substituted for "should" wherever it appears. Interpret references in these publications to the "authority having jurisdiction," or words of similar meaning, to mean the Government .

1.6.7 Material and Equipment Manufacturing Date

Products manufactured more than 3 years prior to date of delivery to site shall not be used, unless specified otherwise.

1.7 POSTED OPERATING INSTRUCTIONS

Provide for each system and principal item of equipment as specified in the technical sections for use by operation and maintenance personnel. The operating instructions shall include the following:

a. Wiring diagrams, control diagrams, and control sequence for each principal system and item of equipment.

b. Start up, proper adjustment, operating, lubrication, and shutdown procedures.

c. Safety precautions.

d. The procedure in the event of equipment failure.

e. Other items of instruction as recommended by the manufacturer of each system or item of equipment.

Print or engrave operating instructions and frame under glass or in approved laminated plastic. Post instructions where directed. For operating instructions exposed to the weather, provide weather-resistant materials or weatherproof enclosures. Operating instructions shall not fade when exposed to sunlight and shall be secured to prevent easy removal or peeling.

1.8 NAMEPLATES

ASTM D 709. Provide laminated plastic nameplates for each panelboard, equipment enclosure, relay, switch, and device; as specified in the technical sections or as indicated on the drawings. Each nameplate inscription shall identify the function and, when applicable, the position.

1.9 WARNING SIGNS

Provide warning signs for the enclosures of electrical equipment including substations, pad-mounted transformers, pad-mounted switches, generators, and switchgear having a nominal rating exceeding 600 volts. Signs shall be written in both Afghani and English.

When the enclosure integrity of such equipment is specified to be in accordance with NEMA C57.12.28, such as for pad-mounted transformers, provide self-adhesive warning signs on the outside of the high voltage compartment door(s). Sign shall have legend "DANGER HIGH VOLTAGE". The word "DANGER" shall be in white letters on a red background and the words "HIGH VOLTAGE" shall be in black letters on a white background.

When such equipment is guarded by a fence, mount signs on the fence. Provide metal signs having nominal dimensions of 355 by 255 mm with the legend "DANGER HIGH VOLTAGE KEEP OUT" printed in three lines of nominal 75 mm high white letters on a red and black field.

1.10 CABLE TAGS IN MANHOLES, HANDHOLES, AND VAULTS

Provide tags for each cable or wire located in manholes, handholes, and vaults. The first position on the tag shall denote the voltage. The second through sixth positions on the tag shall identify the circuit. The next to last position shall denote the phase of the circuit and shall

include the Greek "phi" symbol. The last position shall denote the cable size.

1.11 ELECTRICAL REQUIREMENTS

Electrical installations shall conform to IEEE C2, NFPA 70, and requirements specified herein.

1.11.1 Motors and Equipment

Provide electrical components of mechanical equipment, such as motors, motor starters, control or push-button stations, float or pressure switches, solenoid valves, and other devices functioning to control mechanical equipment, including control wiring and conduit for circuits rated 100 volts or less, to conform with the requirements of the section covering the mechanical equipment. Extended voltage range motors shall not be permitted. The interconnecting power wiring and conduit, control wiring rated 120 volts (nominal) and conduit, the motor control equipment forming a part of motor control centers, and the electrical power circuits shall be provided under Division 16.

Motors, controllers, integral disconnects, and contactors shall conform to Section 16402, "Interior Distribution System" . Extended voltage range motors shall not be permitted. Control voltage for controllers and contactors shall not exceed 220 volts nominal. When motors and equipment furnished are larger than sizes indicated, the cost of additional electrical service and related work shall be included under the section that specified that motor or equipment. Where fuse protection is specifically recommended by the equipment manufacturer, provide fused switches in lieu of non-fused switches indicated.

1.11.2 Wiring and Conduit

Provide internal wiring for components of packaged equipment as an integral part of the equipment. Provide power wiring and conduit for field-installed equipment, and motor control equipment forming part of motor control centers or switchgear assemblies, the conduit and wiring connecting such centers, assemblies, or other power sources to equipment under Section 16402, "Interior Distribution System." Control wiring and conduit shall be provided under, and conform to the requirements of the section specifying the associated equipment.

1.11.3 New Work

Provide electrical components of mechanical equipment, such as motors, motor starters (except starters/controllers which are indicated as part of a motor control center), control or push-button stations, float or pressure switches, solenoid valves, integral disconnects, and other devices functioning to control mechanical equipment, as well as control wiring and conduit for circuits rated 100 volts or less, to conform with the requirements of the section covering the mechanical equipment. Extended voltage range motors shall not be permitted. The interconnecting power wiring and conduit, control wiring rated 120 volts (nominal) and conduit, the motor control equipment forming a part of motor control centers, and the electrical power circuits shall be provided under Division 16, except internal wiring for components of packaged equipment shall be provided as an integral part of the equipment. When motors and equipment furnished are larger than sizes indicated, provide any required changes to the electrical service as may be necessary and related work as a part of the work for the

section specifying that motor or equipment.

1.11.4 Three-Phase Motor Protection

Provide controllers for motors rated 1-hp and above with electronic phase-voltage monitors designed to protect motors from phase-loss, undervoltage, and overvoltage. Provide protection for motors from immediate restart by a time adjustable restart relay.

1.12 INSTRUCTION TO GOVERNMENT

Where specified in the technical sections, furnish the services of competent instructors to give full instruction to designated Government personnel in the adjustment, operation, and maintenance of the specified systems and equipment, including pertinent safety requirements as required. Instructors shall be thoroughly familiar with all parts of the installation and shall be trained in operating theory as well as practical operation and maintenance work. Instruction shall be given during the first regular work week after the equipment or system has been accepted and turned over to the Government for regular operation. The number of man-days (8 hours per day) of instruction furnished shall be as specified in the individual section. When more than 4 man-days of instruction are specified, use approximately half of the time for classroom instruction. Use other time for instruction with equipment or system. When significant changes or modifications in the equipment or system are made under the terms of the contract, provide additional instructions to acquaint the operating personnel with the changes or modifications.

1.13 LOCKOUT REQUIREMENTS

Provide disconnecting means capable of being locked out for machines and other equipment to prevent unexpected startup or release of stored energy in accordance with 29 CFR 1910.147. Mechanical isolation of machines and other equipment shall be in accordance with requirements of Division 15, "Mechanical."

PART 2 PRODUCTS

Where locally produced materials that meet requirements are available, use these before imported materials.

PART 3 EXECUTION

3.1 PAINTING OF EQUIPMENT

3.1.1 Factory Applied

Electrical equipment shall have factory-applied painting systems which shall, as a minimum, meet the requirements of NEMA ICS 6 corrosion-resistance test and the additional requirements specified in the technical sections .

3.1.2 Field Applied

Paint electrical equipment as required to match finish of adjacent surfaces or to meet the indicated or specified safety criteria. Painting shall be as specified in Section 09900, "Paints and Coatings".

3.2 NAMEPLATE MOUNTING

Provide number, location, and letter designation of nameplates as indicated.

3.3 WARNING SIGN MOUNTING

Provide the number of signs required to be readable from each accessible side.

3.4 CABLE TAG INSTALLATION

Install cable tags in each manhole, handhole, and vault as specified, including each splice. Install cable tags over the fireproofing, if any, and locate the tags so that they are clearly visible without disturbing any cabling or wiring in the manholes, handholes, and vaults.

-- End of Section --

SECTION 16070

SEISMIC PROTECTION FOR ELECTRICAL EQUIPMENT

PART 1 GENERAL

1.1 REFERENCES

The publications listed below form a part of this specification to the extent referenced. The publications are referred to in the text by basic designation only.

Unless noted otherwise, all material used shall be in compliance with the requirements of the applicable German (DIN) Standards. In the event DIN Standard material is unavailable, contractor may then select comparable British Standard (BS), or Underwriters Laboratories Inc. (UL) listed material. Equipment enclosure types shall be in compliance with the National Electrical Manufacturer's Association (NEMA) or the International Electro-Technical Committee (IEC) standards. Material and equipment installed under this contract shall be for the appropriate application.

ASTM INTERNATIONAL (ASTM)

ASTM E 580	(2002) Application of Ceiling Suspension Systems for Acoustical Tile and Lay-in Panels in Areas Requiring Moderate Seismic Restraint

U.S. ARMY CORPS OF ENGINEERS (USACE)

TI 809-04	(1998) Seismic Design for Buildings

UNDERWRITERS LABORATORIES (UL)

UL 1570	(1995; Rev thru Feb 1999) Fluorescent Lighting Fixtures
UL 1571	(1995; Rev thru Feb 1999) Incandescent Lighting Fixtures

1.2 MATERIAL AUTHENTICATION DATA INCLUDED IN DESIGN ANALYSIS

Government approval is required for submittals with a "G" designation; submittals not having a "G" designation are for information only. When used, a designation following the "G" designation identifies the office that will review the submittal for the Government. The following shall be submitted in accordance with Section 01330 SUBMITTAL PROCEDURES:

SD-03 Product Data

Lighting Fixtures in Buildings; G
Equipment Requirements; G

Copies of the design calculations with the detail drawings. Calculations shall be by a professional engineer and shall verify the capability of structural members to which bracing is attached

for carrying the load from the brace.

Contractor Designed Bracing; G

Copies of the Design Calculations with the Drawings. Calculations shall be approved by a, Professional Engineer. Calculations shall verify the capability of structural members to which bracing is attached for carrying the load from the brace.

1.3 SYSTEM DESCRIPTION

1.3.1 General Requirements

The requirements for seismic protection measures described in this section shall be applied to the electrical equipment and systems listed below.

1.3.2 Electrical Equipment

Electrical equipment shall include the following items to the extent required on the drawings or in other sections of these specifications:

Air Handling Units
Panelboards
Light Fixtures

1.3.3 Electrical Systems

The following electrical systems shall be installed as required on the drawings and other sections of these specifications and shall be seismically protected in accordance with this specification: Communication Tower

1.3.4 Contractor Designed Bracing

The Contractor shall design the bracing in accordance with TI 809-04 and additional data furnished by the Government. Resistance to lateral forces induced by earthquakes shall be accomplished without consideration of friction resulting from gravity loads. TI 809-04 uses parameters for the building, not for the equipment in the building; therefore, corresponding adjustments to the formulas shall be required. Loadings determined using TI 809-04 are based on strength design; therefore, the AISC LRFP specifications shall be used for the design. The bracing for the following electrical equipment and systems shall be developed by the Contractor: Light fixtures, air handling units, communication tower.

1.3.5 Conduits Requiring No Special Seismic Restraints

Seismic restraints may be omitted from electrical conduit less than 64 mm trade size. All other interior conduit, shall be seismically protected as specified.

1.4 EQUIPMENT REQUIREMENTS

1.4.1 Rigidly Mounted Equipment

The following specific items of equipment to be furnished under this contract shall be constructed and assembled to withstand the seismic forces specified in TI 809-04, Chapter 10. Each item of rigid electrical equipment shall be entirely located and rigidly attached on one side only

of a building expansion joint. Piping, electrical conduit, etc., which cross the expansion joint shall be provided with flexible joints that are capable of accommodating displacements equal to the full width of the joint in both orthogonal directions.

PART 2 PRODUCTS

2.1 LIGHTING FIXTURE SUPPORTS

Lighting fixtures and supports shall conform to UL 1570 or UL 1571 as applicable.

2.2 SWAY BRACING MATERIALS

Sway bracing materials (e.g. rods, plates, rope, angles, etc.) shall be as specified in TI 809-04.

PART 3 EXECUTION

3.1 SWAY BRACES FOR CONDUIT

Conduit shall be braced as for an equivalent weight pipe.

3.2 LIGHTING FIXTURES IN BUILDINGS

Lighting fixtures and supports shall conform to the following:

3.2.1 Pendant Fixtures

Pendant fixtures shall conform to the requirements of TI 809-04, Chapter 10.

3.2.2 Ceiling Attached Fixtures

3.2.2.1 Recessed Fluorescent Fixtures

Recessed fluorescent individual or continuous-row mounted fixtures shall be supported by a seismic-resistant suspended ceiling support system built in accordance with ASTM E 580. Seismic protection for the fixtures shall conform to the requirements of TI 809-04, Chapter 10. Recessed lighting fixtures not over 25 kg in weight may be supported by and attached directly to the ceiling system runners using screws or bolts, number and size as required by the seismic design. Fixture accessories, including louvers, diffusers, and lenses shall have lock or screw attachments.

3.2.2.2 Surface-Mounted Fluorescent Fixtures

Surface-mounted fluorescent individual or continuous-row fixtures shall be attached to a seismic-resistant ceiling support system built in accordance with ASTM E 580. Seismic protection for the fixtures shall conform to the requirements of TI 809-04, Chapter 10.

3.2.3 Assembly Mounted on Outlet Box

A supporting assembly, that is intended to be mounted on an outlet box, shall be designed to accommodate mounting features on 100 mm boxes, plaster rings, and fixture studs.

3.2.4 Wall-Mounted Emergency Light Unit

Attachments for wall-mounted emergency light units shall be designed and secured for the worst expected seismic disturbance at the site.

3.2.5 Lateral Force

Structural requirements for light fixture bracing shall be in accordance with TI 809-04.

-- End of Section --

SECTION 16175

LOCAL CONTROL PANELS FOR SYSTEMS

PART 1 GENERAL

1.1 SUBMITTALS

Government approval is required for submittals with a "G" designation; submittals not having a "G" designation are for information only. When used, a designation following the "G" designation identifies the office that will review the submittal for the Government. The following shall be submitted in accordance with Section 01330 SUBMITTAL PROCEDURES:

SD-03 Product data

Local Control Panels

1. Provide front and rear elevations that include the outline of instrument transformers, all internal barriers, and interior elevations.

2. Provide section views that include the steel wide flange and channel iron mounting base details. All dimensions for rough in work at the site shall be provided.

3. Provide the space allocation for termination of feeder and control cables and the space allocation for conduit installation.

4. Provide the arrangement, identification of components, and nameplate schedule for all units.

5. Provide details of bus, connections, terminals, etc., including the complete ground bus arrangement and enclosure ground connections.

6. Provide single line diagrams; JIC ladder type control schematic diagrams; and relay and metering schematic diagrams for the equipment.

7. Wiring Diagrams.

a. Connection diagrams for the wiring of equipment in each local control panel shall be included.

b. Interconnection diagrams shall be included showing the wiring to other equipment. The terminal block points shall be clearly identified for the external wiring which shall be routed in or out of each local control panel. The wiring diagrams shall provide adequate space for the addition of cable and wire designations for the external wiring to be routed in or out of each control panel at the terminal blocks.

PART 2 PRODUCTS

2.1 MATERIALS

A. Local control panels furnished by the supplier of the equipment shall conform with the requirements given herein.

B. All enclosures for the local control panels shall have the proper NEMA rating for the area in which they are installed, or the equivalent International Protection (IP) rating.

C. Each local control panel shall have a front door with concealed hinges and shall be provided with a sturdy, positive latching.

2.2 SAFETY SWITCHES AND CIRCUIT BREAKERS

A. Safety switches shall be rated at 600 volts for 380 volt AC circuits and 250 volts for 220 volt AC. Each safety switch shall be non-fusible horsepower rated.

B. Circuit breakers for 380 volt service shall have a minimum frame size of 60 amperes and shall be rated for 600 volts. The trip settings shall be as required or as shown on the Drawings. The breaker interrupting rating shall be as per design requirements, symmetrical at 380 volts AC.

C. Circuit breakers for 220 volt and 380 volt service shall be 600 volt rated, shall be of the "bolt on" type and shall have an interrupting rating of as per design requirement at 240 volts AC. The trip settings shall be as required or as shown on the Drawings.

D. Circuit breaker and safety switch Basis of Design: Cutler-Hammer, GE, ABB, Group Schneider Telemechanic, or Siemens Energy & Automation.

2.3 MOTOR STARTERS

A. The minimum size starter used for 380 volts, 3 phase, 50 Hertz motor shall be NEMA Size 1. Auxiliary relay contacts shall be rated for a minimum continuous current of 10 Amperes and a maximum voltage of 600 volts.

B. Each starter shall be provided with a molded case magnetic circuit protector (MCP) type breaker with externally operated door interlocked operating handle with padlock provisions for three locks.

C. Each starter shall have a 380-220 volt control transformer with fused primary and one side of secondary fused and the other side grounded. Each control transformer shall have a capacity of 100 VA above the required NEMA size starter rating for external circuits. The minimum size control transformer shall be 200 VA.

D. Each starter shall be equipped with three phase thermal overcurrent relays with reset operated from outside the door. The reset pushbutton shall be oil tight.

E. Each starter shall be provided with a minimum of two normally open and two normally closed extra auxiliary (non power) contacts. This number is in excess of the number of standard auxiliary contacts.

F. Three overload relays selected to carry 100 percent of full load motor current continuously, including the motor service factor, to withstand motor starting and avoid nuisance trips.

G. Each starter shall be provided with a Hand-Off-Auto selector switch and with push to test, light emitting diode (LED) type red (on) and green (off) indicating lights mounted on the door.

H. Each starter contactor shall be furnished with barrier type terminal blocks in accordance with the equipment manufactures UL listed components. All terminals shall be completely accessible from the front of the control panel.

I. Basis of Design: Allen-Bradley, Cutler-Hammer, GE, Square D, Group Schneider Telemechanic, or Siemens Energy & Automation.

J. Metering pumps control panels will contain those particular starters. All other starters will be located in the electrical room of the water treatment plant or wastewater treatement plant, as appropriate.

2.4 CONTROL DEVICES

A. Enclosures shall be NEMA or IEC rated for the area in which they are installed.

B. Pushbuttons

1. Pushbutton operators shall have a full guard with green insert for start and red insert for stop.

2. Emergency stop push button operators shall have a full guard with a red insert.

3. The lock-out stop pushbutton shall be equipped with a lockable mechanism that will hold the stop button in the depressed condition.

4. Each contact block shall have double break, direct acting contacts, with normally open and normally closed contacts.

5. Each pushbutton operator shall be provided with the number of contact blocks as shown on the Drawings or as required for the application.

C. Selector Switches

1. Selector switches shall be provided as 2 position, 3 position, or 4 position; with or without spring return as shown on the Drawings or as required for the application.

2. The selector switch operator knobs shall be for gloved hand operation.

3. Key type selector switch operators shall be provided as shown on the Drawings or as required in these Specification sections.

4. Each selector switch shall be provided with the appropriate cam operator as required for the application.

5. Each contact block shall have double break direct acting contacts, with normally open and normally closed contacts.

D. Pilot Lights

1. Pilot lights shall be light emitting diode (LED) type with the assembly rated for direct connection at the control circuit voltage.

2. Each LED shall be replaceable.

3. Each LED shall be of the high brightness type.

4. Each pilot light shall be push-to-test type.

5. Color caps shall be provided as follows:

a. Red shall be Running or "On"

b. Green shall be Not Running, Stopped, or "Off"

c. White shall be Ready To Operate

d. Amber shall be Safety Device Trip

e. Other colors shall be as shown on the Drawings or as required in these Specification sections.

2.5 RELAYS

A. Relay logic circuits with manual and automatic pilot devices shall be used to control all motor operation. Control circuit voltage shall be 220 volts AC.

B. Control relays, unless otherwise noted, shall be 220 volt AC operated, multi contact, load voltage and current rated general purpose relays in NEMA Type 1 enclosures with contacts as required.

C. Each relay shall be rated 600 volts and shall have convertible, double break, silver alloy, contacts with pressure wire connectors. Each contact shall be provided with normally open or closed status indication.

D. Timing Relays shall be pneumatic type .

E. Each relay coil shall be suitable for 220 volt, single phase, 50 Hertz application.

F. Basis of Design: Agastat, Allen-Bradley, Cutler-Hammer, GE, Group Schneider Telemechanic, or Siemens Energy & Automation.

2.6 ELECTRICALLY HELD CONTACTORS

A. Electrically held contactors shall be provided as shown on the Drawings, as specified, or as required for the application.

B. Each power contact shall be totally enclosed, double break contacts rated for all types of ballast loads, tungsten loads, resistance loads, and motor loads.

1. Each contact shall be replaceable without disturbing the line or load wiring.

2. Each contact shall be 600 volt rated.

3. Each contact rated 30 Amperes and larger shall be normally open type.

4. Each contact rated 20 Amperes shall be convertible from normally open to normally closed.

C. Each contactor coil shall be suitable for the applied control voltage, shall be encapsulated and shall be rated for continuous operation.

D. Each contactor shall have a control circuit holding contact, two normally open auxiliary contacts, and two normally closed auxiliary contacts. Contactors that have 20 Ampere rated power contacts may utilize 4 poles for the required auxiliary contacts.

2.7 MECHANICALLY HELD CONTACTORS

A. Each mechanically held contactor shall be provided as shown on the Drawings, as specified, or as required for the application.

B. Each power contact shall be totally enclosed, double break contacts rated for all types of ballast loads, tungsten loads, resistance loads, and motor loads.

1. Each contact shall be replaceable without disturbing the line or load wiring.

2. Each contact shall be 600 volt rated.

3. Each contact rated 30 Amperes and larger shall be normally open type.

4. Each contact rated 20 Amperes shall be convertible from normally open to normally closed.

C. Each contactor coil shall be suitable for the applied control voltage, shall be encapsulated, and shall be rated for continuous operation.

D. Each contactor shall have coil clearing contacts for both the latch and unlatch operations.

E. Each contactor shall have two normally open auxiliary contacts and two normally closed auxiliary contacts. Contactors that have 20 Ampere rated power contacts may utilize 4 poles for the required auxiliary contacts.

2.8 NAMEPLATES

A. Nameplates shall be laminated phenolic material with engraved letters and shall designate the purpose of each switch, each circuit breaker, each instrument, each meter, each relay, each fuse, each terminal block, etc.

B. The minimum height of letters used shall be 3/16 inch. The main titles

for each panel, each circuit or each cubicle designation, shall be in letters 3/8 inch in height. Letters shall be block type and square cut. The wording shall be furnished as shown on the shop drawings. Each nameplate shall be white phenolic material with black engraved letters.

C. Each nameplate shall be fastened to the equipment with stainless steel screws. This shall not change the enclosure NEMA Type rating.

2.9 CABLE TERMINATIONS AND TAGGING

A. Compression type cable lugs for terminating cables and equipment within each panel or cables entering and leaving the enclosed structures shall be furnished and installed by the equipment manufacturer. Copper type connectors and terminations shall be furnished. Aluminum copper type are not acceptable. Copper compression connectors shall be long barrel, tin plated, closed end compression type. The barrel for each cable lug shall be sized for the exact cable size specified.

B. Supports shall be provided for all power and control cables.

C. All cable, primary and secondary, shall enter from the top or bottom. Provisions shall be provided to support incoming cable. Sufficient room shall be provided to terminate the cables.

D. Cable/wire markers shall be installed on both ends of all conductors both for internal and external cables.

2.10 CONTROL DEVICES AND WIRING

A. Control devices, local instrument cables, and wiring required on the equipment shall be furnished and installed at the factory.

B. All small wiring for control or accessory equipment shall be installed in Code Approved wireway. All small wiring using metallic enclosures shall be grounded.

C. All internal control wiring shall be Number 12 AWG (4 mm2), except where larger size conductors are needed for current carrying requirements or smaller wiring on mass produced pre-manufactured sub-assemblies. Each conductor shall be stranded copper for fixed wiring and extra flexible copper for hinged wiring. Internal current transformer secondary wiring shall be Number 10 AWG (6 mm2). Alarm wiring shall be Number 16 AWG (2 mm2)twisted paired shielded. Each conductor shall have 600 volts, 90 degrees C, polyvinyl chloride insulation with flameproof braid covering, Type TBS, or cross linked polyethylene, Type SIS.

D. All control and instrument wiring; alarm leads; instrument transformer secondaries; and other internal wiring; for connection to internal and external cables, shall be terminated at terminal blocks. A maximum of two wires shall be connected under each terminal screw. Each terminal block shall be barriered molded blocks, 600 volt rated, 70 Ampere (minimum) rating, screw type, with washer head screws. Acceptable terminal block manufacturers shall be Marathon Series 1600, Cutler-Hammer, or Buchannan.

E. Compression type solderless copper lugs shall be furnished for each terminal block for external control and instrument wires.

F. Cable/wire markers shall be installed on both ends of all conductors both for internal and external cables.

G. Wiring between relays and terminal blocks shall be completed for all contacts, whether they are used or not.

2.11 FUSES

A. The Contractor shall furnish and install fuses for all fusible equipment provided on this Project regardless of which trade has provided such equipment. All fuses shall be provided in accordance with the indications of size and voltage ratings given on the Drawings and shall have UL and NEC approval as being suitable protection for conductors under overload conditions.

1. All fuses shall be of the same manufacturer.

2. No paralleling of fuses shall be permitted.

B. Fuses shall be dual element with a separate thermal element that will open at 280 degrees F or less and shall have time delay such that they shall hold 500 percent rated current for a minimum of ten seconds in all sizes.

C. Control circuit fuses shall be time-delay current limiting.

D. The Contractor shall check each motor nameplate data and provide proper fuses for motor running protection.

E. Spare fuses shall be furnished in the ratio of ten percent of each size and type installed, but not less than three of each size and type. All fuses blown during construction shall be replaced by the Contractor and a complete supply of spare fuses shall be turned over to the Commissioner upon completion of the Project.

2.12 PAINTING

A. All interior and exterior seams shall be carefully filled and sanded smooth for neat appearance. The equipment manufacturer shall remove oils and dirt to form a chemically and anodically neutral conversion coating, to improve the finish to metal bond, and to provide resistance to rust. All surfaces shall be phosphatized before any of the protective coatings are applied. The final coatfornon-stainless steel surfaces shall be baked semi gloss enamel to provide adhesion, resiliency, durability, color stability, and stain resistance.

B. The exterior surface of all non-stainless steel structures shall be thoroughly cleaned and given a coat of primer and a finish coat of the equipment manufacturer's Standard of ANSI Standard light gray color Number 61.

C. The interior surface of all non-stainless steel structures shall be given a primary coat and a finish coat of ANSI Standard light gray color Number 61.

D. The equipment manufacturer shall provide an adequate supply of touch up paint in aerosol cans.

E. A packaged kit of refinishing materials, with complete instructions, shall be included with each shipment for touch up in the field.

PART 3 EXECUTION

3.1 INSTALLATION

A. The Contractor shall install the equipment in strict accordance with the final reviewed shop drawings and the equipment manufacturer's recommendations.

B. Final adjustments to the equipment shall include verification of the proper mechanical operation, verification of the instrument operation, and setting of the circuit breakers, and devices.

C. The Contractor shall adjust the location of equipment to accommodate the work in accordance with field conditions encountered.

D. The equipment shall be installed to permit maintenance and replacement of parts, and shall be clear of all openings with swinging or moving doors, partitions or access panels.

E. The equipment shall be of such construction that when it is installed on a concrete pad there are no openings between the top of the pad and the bottom of the equipment.

F. Mounting Bases for Floor Mounted Control Panels

1. The Contractor shall install each floor mounted control panel on a 4 inch thick concrete housekeeping pad of sufficient size plus a minimum 4 inch apron.

2. Each foundation shall be level, stable, and compacted to 95 percent Standard Proctor.

3. Conduit locations shall be in accordance with manufacturer=s approved shop drawings.

G. Wall Mounted Control Panel

1. Each wall mounted control panel shall be supported and mounted away from the wall with a galvanized steel strut support system. The minimum separation between the equipment and the wall shall be one inch.

2. Each wall mounted cabinet shall be installed with the top at a maximum of 6 feet 6 inches above the finished floor.

3.2 PERFORMANCE TESTING

The Contractor shall test each complete local control panel installation to assure proper operation and correct sizing of all control fuses and motor overload units.

-- End of Section --

SECTION 16263

DIESEL-GENERATOR SET STATIONARY 100-2500 KW, WITH AUXILIARIES

PART 1 GENERAL

1.1 REFERENCES

The publications listed below form a part of this specification to the extent referenced. The publications are referred to in the text by basic designation only.

Unless noted otherwise, all material used shall be in compliance with the requirements of the applicable German (DIN) Standards. In the event DIN Standard material is unavailable, contractor may then select comparable British Standard (BS), or Underwriters Laboratories Inc. (UL) listed material. Equipment enclosure types shall be in compliance with the National Electrical Manufacturer's Association (NEMA) or the International Electro-Technical Committee (IEC) standards. Material and equipment installed under this contract shall be for the appropriate application.

Unless otherwise specified or indicated, electrical and electronics terms used in these specifications and on the Drawings, shall be defined in DIN, I.E.C., BS or EN standards.

AMERICAN NATIONAL STANDARDS INSTITUTE (ANSI)

ANSI C12.11	(1987; R 1993) Instrument Transformers for Revenue Metering, 10 kV BIL through 350 kV BIL (0.6 kV NSV through 69 kV NSV)
ANSI C39.1	(1981; R 1992) Requirements for Electrical Analog Indicating Instruments

ASTM INTERNATIONAL (ASTM)

ASTM A 53/A 53M	(2001) Pipe, Steel, Black and Hot-Dipped, Zinc-Coated, Welded and Seamless
ASTM A 106	(2002) Seamless Carbon Steel Pipe for High-Temperature Service
ASTM A 181/A 181M	(2001) Carbon Steel Forgings, for General-Purpose Piping
ASTM A 234/A 234M	(2001a) Piping Fittings of Wrought Carbon Steel and Alloy Steel for Moderate and High Temperature Service
ASTM D 975	(1998b) Diesel Fuel Oils

ASME INTERNATIONAL (ASME)

ASME B16.3	(1998) Malleable Iron Threaded Fittings
ASME B16.5	(1996) Pipe Flanges and Flanged Fittings

ASME B16.11	(2001) Forged Fittings, Socket-Welding and Threaded

ELECTRICAL GENERATING SYSTEMS ASSOCIATION (EGSA)

EGSA 101P	(1995a) Engine Driven Generator Sets

INSTITUTE OF ELECTRICAL AND ELECTRONICS ENGINEERS (IEEE)

IEEE C57.13.1	(1981; R 1992) IEEE Guide for Field Testing of Relaying Current Transformers
IEEE Std 1	(1986; R 1992) General Principles for Temperature Limits in the Rating of Electric Equipment and for the Evaluation of Electrical Insulation
IEEE Std 43	(1974; R 1991) Testing Insulation Resistance of Rotating Machinery
IEEE Std 100	(1997) IEEE Standard Dictionary of Electrical and Electronics Terms
IEEE Std 115	(1995) IEEE Guide: Test Procedures for Synchronous Machines
IEEE Std 120	(1989) Electrical Measurements in Power Circuits
IEEE Std 519	(1992) Harmonic Control in Electrical Power systems

MANUFACTURERS STANDARDIZATION SOCIETY OF THE VALVE AND FITTINGS INDUSTRY (MSS)

MSS SP-58	(1993) Pipe Hangers and Supports - Materials, Design and Manufacture
MSS SP-69	(1996) Pipe Hangers and Supports - Selection and Application
MSS SP-80	(1997) Bronze Gate, Globe, Angle and Check Valves

NATIONAL ELECTRICAL MANUFACTURERS ASSOCIATION (NEMA)

NEMA ICS 6	(1993; R 2001) Industrial Control and Systems, Enclosures
NEMA MG 1	(1998; Rev 1, 2000) Motors and Generators
NEMA PB 1	(1995) Panelboards
NEMA PB 2	(1995) Deadfront Distribution Switchboards
NEMA SG 5	(1995) Power Switchgear Assemblies

NATIONAL FIRE PROTECTION ASSOCIATION (NFPA)

NFPA 30	(1996) Flammable and Combustible Liquids Code
NFPA 70	(2005) National Electrical Code
NFPA 99	(1999) Health Care Facilities

SOCIETY OF AUTOMOTIVE ENGINEERS INTERNATIONAL (SAE)

SAE J537	(1996) Storage Batteries

1.2 SUBMITTALS

Government approval is required for submittals with a "G" designation; submittals not having a "G" designation are for information only. When used, a designation following the "G" designation identifies the office that will review the submittal for the Government. The following shall be submitted in accordance with Section 01330 SUBMITTAL PROCEDURES:

SD-03 Product Data

Performance Criteria
Sound Limitations
Harmonic Requiremants
Engine-Generator Parameter Schedule
Power Factor
Heat Rejected To Engine-Generator Space
Cooling System
Time-Delay on Alarms
Generator

The generator kW rating and short circuit current capacity (both symmetric and asymmetric).

Manufacturer's Catalog
Site Welding
Spare Parts
Onsite Training
Battery Charger
Vibration-Isolation
Posted Data and Instructions
Instructions

SD-07 Certificates

Vibration Isolation
Prototype Test
Reliability and Durability
Emissions
Sound Limitations
Flywheel Balance
Materials and Equipment
Cooling System

1.3 SUBMITTALS

The following shall be submitted in accordance with Section 01335 SUBMITTAL

PROCEDURES for design built project:

SD-06 Test Reports

Factory Inspection and Tests
Factory Tests

SD-10 Operation and Maintenance Data

Operation and Maintenance Manuals
Maintenance Procedures
Special Tools
Filters

1.4 DOCUMENTATION FOR PROPOSED VARIANT PRODUCTS

For products not explicitly named in the specification that meet product requirement criteria named herein, product data as listed in article titled MATERIAL AUTHENTICATION DATA INCLUDED IN DESIGN ANALYSIS shall be submitted for review. Product information will be provided to establish that proposed product meets the requirements of this specification and has the indicated qualities related to type, function, dimension, in-service performance, physical properties, appearance, or other relevant characteristics that equal or exceed those of specified product. Product is consistent with the Contract Documents and will produce the indicated results, and is compatible with other portions of the Work.

1.5 SYSTEM DESCRIPTION

Prime Power Generators: Generators shall be skid mounted industry size, 1500 RPM, diesel-engine Cummins Prime Rated engine-generator sets. Number of units shall be as indicated on Drawings (Cummins KTA50-G8 Engine with Cummins P7340 GENERATOR). Generating voltage shall be 3 phase, 380/220 volts, and 50 hertz, stepped up to 15kV, via transformers, for base wide Primary Power Distribution through generator switchgear described below. Each generator shall be provided with a day tank with a minimum fuel capacity of 8 hours operating at 100% generated rated (kW) load.

Generator Synchronizing Equipment: Generator synchronizing/paralleling equipment shall be provided, in order for the generator(s) to synchronize with an operating generator, prior to coming on-line. Minimum of one (1) prime power generator shall be on line at all times. With an increase of the demand load, all stand-by generator(s) shall start and the generator that synchronizes first with the operating generator shall come on-line and share load equally. The other generator(s) shall run through a complete cool-down cycle and then stop. Similarly, with a decrease in the demand load, the generator(s) shall drop-off line, one at a time, keeping a minimum of one generator operating on-line. All generators shall go through a cool-down cycle prior to coming to stop. All relaying shall be automatically reset for automatic restart and stopping of generators as the load demands increase or decrease. Load sharing by the stand-by generator(s) shall be adjustable between 50% to 85% load on the operating generator(s). Synchronizing/paralleling of generators shall be automatic and manual.

Generator Paralleling/ Synchronizing Equipment Computer Software Operation: The Contractor shall provide software for programming of the additional generator paralleling/ synchronizing equipment.

Black Start Generator: Power Plant shall be provided with a 'black-start' generating unit. Generator shall be appropriately sized (kW rating) to meet all of the power requirements for the initial start-up of the power plant. Unit shall be skid mounted and rated at 380/220 volt, 3 phase, 4 wire and 50 hertz. Upon bringing the prime power generator on line, initial start-up power plant load shall be automatically transferred from the black-start generator to the power plant, via an Automatic Transfer Switch (ATS).

1.5.1 Rated Output Capacity

Each engine-generator-set shall provide power equal to the sum of Service Load plus the machine's efficiency loss and associated ancillary equipment loads. Rated output capacity shall also consider engine and/or generator oversizing required due to installation elevation.

1.5.2 Power Ratings

Power ratings shall be in accordance with EGSA 101P.

1.5.3 Transient Response

The engine-generator set governor and voltage regulator shall cause the engine-generator set to respond to the maximum step load changes such that output voltage and frequency recover to and stabilize within the operational bandwidth within the transient recovery time. The engine-generator set shall respond to maximum step load changes such that the maximum voltage and frequency deviations from bandwidth are not exceeded.

1.3.5 Reliability and Durability

Each engine-generator set shall have both an engine and a generator capable of delivering the specified power with an anticipated mean time between overhauls of not less than 10,000 hours operating with a 70% load factor. Two like engines and two like generators shall be cited that have performed satisfactorily in a stationary power plant, independent from the physical location of the manufacturer's and assembler's facilities. The engine and generators should have been in operation for a minimum of 8000 actual hours at a minimum load of 70% of the rated output capacity. During two consecutive years of service, the units should not have experienced any failure resulting in a downtime in excess of 72 hours. Like engines shall be of the same model, speed, bore, stroke, number and configuration of cylinders and rated output capacity. Like generators shall be of the same model, speed, pitch, cooling, exciter, voltage regulator and rated output capacity.

1.6 GENERAL REQUIREMENTS

1.6.1 Engine-Generator Set

Each set shall consist of one engine, one generator, and one exciter mounted, assembled, and aligned on one base; and other necessary ancillary equipment which may be mounted separately. Sets over 750 kW capacity may be shipped in sections. Each set component shall be environmentally suitable for the location shown and shall be the manufacturer's standard product offered in catalogs for commercial or industrial use. Any nonstandard products or components and the reason for their use shall be

specifically identified in paragraph SUBMITTALS.

1.6.2 Nameplates

Each major component of this specification shall have the manufacturer's name, type or style, model or serial number and rating on a plate secured to the equipment. As a minimum, nameplates shall be provided for:

Engines	Relays
Generators	Transformers (CT & PT)
Regulators	Day tanks
Pumps and pump motors	Governors
Generator Breaker	Air Starting System
Economizers	Heat exchangers (other than base mounted)

Where the following equipment is not provided as a standard component by the diesel engine generator set manufacturer, the nameplate information may be provided in the maintenance manual in lieu of nameplates.

Battery charger	Heaters
Switchboards	Exhaust mufflers
Switchgear	Silencers
Battery	Exciters

1.6.3 Personnel Safety Devices

Exposed moving parts, parts that produce high operating temperatures, parts which may be electrically energized, and parts that may be a hazard to operating personnel shall be insulated, fully enclosed, guarded, or fitted with other types of safety devices. The safety devices shall be installed so that proper operation of the equipment is not impaired.

1.6.4 Verification of Dimensions

Before performing any work, the premises shall be visited and all details of the work verified. The Contracting Officer shall be advised in writing of any discrepancies.

1.6.5 Site Welding

Structural members shall be welded in accordance with DIN, I.E.C., BS or EN standards. Welder qualification tests shall be performed for each welder whose qualifications are not in compliance with the referenced standards. The Contracting Officer shall be notified 24 hours in advance of qualification tests. The qualification tests shall be performed at the work site if practical. The welder or welding operator shall apply his assigned symbol near each weld he makes as a permanent record.

1.6.6 Parallel Operation for use with Future Utility

Each engine-generator set specified for parallel operation shall be configured for automatic and manual parallel operation. Each set shall be capable of parallel operation with a future commercial power source on an infinite bus and with one or more sets on an isolated bus.

Additional spaces in switchgear shall be provided to add paralleling

switchgear to operate as described herein.

Upon receiving a utility power failure signal or variance in power loads, switchgear starts engine generator(s) and controls their synchronization and individual circuit breaker closure to parallel the generators onto the bus. Additional controls allow transfer of loads to the operating bus on a priority basis.

Provisions shall be made upon return of the preferred source, utility paralleling switchgear synchronizes and parallels the engine generators to the preferred source, and transfers the loads without power interruption. Generator test - transferring load from source to source without power interruption - is also available. Use of the closed transition operation minimizes load interruptions during test and transfer.

All equipment shall be UL and/or IEC listed.

The switchgear shall be provided with selector switches for open or closed transition; automatic or manual paralleling of generator or utility sources; automatic or manual retransfer to a normal source.

The switch gear shall be provided with active synchronization, PLC controls, soft loading power factor, and interconnecting protective relay design.

1.6.7 Vibration Limitation

The maximum engine-generator set vibration in the horizontal, vertical, and axial directions shall be limited to 0.15 mm (peak-peak RMS), with an overall velocity limit of 24 mm/second RMS, for all speeds through 110% of rated speed.

1.6.8 Vibration Isolation

Vibration-isolation systems shall be designed and qualified (as an integral part of the base and mounting system in accordance with the seismic parameters specified. Where the vibration-isolation system does not secure the base to the structure floor or unit foundation, seismic restraints shall be provided in accordance with the seismic parameters specified.

1.6.9 Seismic Requirements

Seismic requirements shall be in accordance with Section 16070 SEISMIC PROTECTION FOR ELECTRICAL EQUIPMENT.

1.6.10 Fuel Consumption

Engine fuel consumption shall not exceed the following maximum limits based on the conditions listed below.

Size Range Net kW	% of Rated Output capacity	Fuel Usage kg/kWH (lbs/kWH)
100 - 299	75 and 100	0.272 (0.600)
	50	0.292 (0.643)
300 - 999	75 and 100	0.261 (0.575)
	50	0.272 (0.600)

Size Range Net kW	% of Rated Output capacity	Fuel Usage kg/kWH (lbs/kWH)
1000 - 2500	75 and 100	0.243 (0.536)
	50	0.260 (0.573)

Conditions:

a. Net kW of the Set corrected for engine auxiliaries that are electrically driven, where kW is electrical kilowatt hours.

b. 45 megajoules per kilogram (19,350 Btu per pound) high-heat value for fuel used.

c. Sea level operation.

d. Intake-air temperature not over 32 degrees C .

e. Barometric pressure of intake air not less than 95.7 kPa (28-1/4 inches of mercury) of mercury.

1.6.11 Harmonic Requirements

Non-linear loads to be served by each engine-generator set are as indicated.

1.6.12 Starting Time Requirements

Upon receipt of a signal to start, each engine generator set will start, reach rated frequency and voltage and be ready to assume load within the time specified.

1.7 STORAGE AND INSTALLATION

The Contractor shall properly protect material and equipment, in accordance with the manufacturers recommended storage procedures,before, during, and after installation. Stored items shall be protected from the weather and contamination. During installation, piping and similar openings shall be capped to keep out dirt and other foreign matter.

PART 2 PRODUCTS

2.1 MATERIALS AND EQUIPMENT

2.1.1 Basis of Design

Prime Generator:

Generator shall be rated for 380/220 voltage, 3 phase, 50 hertz.

Black Start Generator:

Generator shall be rated for 380/220 voltage, 3 phase, 50 hertz. At 125 degrees C Rise standby Rating kVA/kW shall be 500 kVA/ 400 kW, 1500 rpm.

2.1.2 Filter Elements

Fuel-oil, lubricating-oil, and combustion-air filter elements shall be

manufacturer's desert filter package .

2.1.3 Instrument Transformers

ANSI C12.11.

2.1.4 Pipe (Sleeves, Fuel/Lube-Oil, Compressed Air, Coolant, and Exhaust)

ASTM A 53/A 53M, ASTM A 106 steel pipe. Pipe smaller than 50 mm shall be Schedule 80. Pipe 50 mm and larger shall be Schedule 40.

a. Flanges and Flanged Fittings: ASTM A 181/A 181M, Class 60, or ASME B16.5, Grade 1, Class 150.

b. Pipe Welding Fittings: ASTM A 234/A 234M, Grade WPB or WPC, Class 150, ASME B16.11, 1360.7 kg .

c. Threaded Fittings: ASME B16.3, Class 150.

d. Valves: MSS SP-80, Class 150.

e. Gaskets: Manufacturer's standard.

2.1.5 Pipe Hangers

MSS SP-58 and MSS SP-69.

2.1.6 Electrical Enclosures

NEMA ICS 6.

2.1.6.1 Power Switchgear Assemblies

NEMA SG 5.

2.1.6.2 Switchboards

NEMA PB 2.

2.1.6.3 Panelboards

NEMA PB 1.

2.2 ENGINE

Each engine shall operate on No. 2-D diesel fuel conforming to ASTM D 975, shall be designed for stationary applications and shall be complete with ancillaries. The engine shall be a standard production model described in the manufacturer's catalog. The engine shall be naturally aspirated, supercharged, or turbocharged. The engine shall be 2- or 4-stroke-cycle and compression-ignition type. The engine shall be vertical in-line, V- or opposed-piston type, with a solid cast block or individually cast cylinders. The engine shall have a minimum of two cylinders. Opposed-piston type engines shall have not less than four cylinders. Each block shall have a coolant drain port. Each engine shall be equipped with an overspeed sensor.

2.3 FUEL SYSTEM

The entire fuel system for each engine-generator set shall conform to the requirements of NFPA 30 for the Power plant and contain the following elements:

2.3.1 Pumps

2.3.1.1 Main Pump

Each engine shall be provided with an engine driven pump. The pump shall supply fuel at a minimum rate sufficient to provide the amount of fuel required to meet the performance indicated within the parameter schedule. The fuel flow rate shall be based on meeting the load requirements and all necessary recirculation.

2.3.1.2 Auxiliary Fuel Pump

Auxiliary fuel pumps shall be provided to maintain the required engine fuel pressure, if either required by the installation or indicated on the drawings. The auxiliary pump shall be driven by a dc electric motor powered by the starting/station batteries. The auxiliary pump shall be automatically actuated by a pressure-detecting device.

2.3.2 Fuel Filter

A minimum of one full-flow fuel filter shall be provided for each engine. The filter shall be readily accessible and capable of being changed without disconnecting the piping or disturbing other components. The filter shall have inlet and outlet connections plainly marked.

2.3.3 Relief/Bypass Valve

A relief/bypass valve shall be provided to regulate pressure in the fuel supply line, return excess fuel to a return line and prevent the build-up of excessive pressure in the fuel system.

2.4 LUBRICATION

Each engine shall have a separate lube-oil system conforming to NFPA 30 for the Power plant for all buildings. Each system shall be pressurized by engine-driven pumps. System pressure shall be regulated as recommended by the engine manufacturer. A pressure relief valve shall be provided on the crankcase for closed systems. The crankcase shall be vented in accordance with the manufacturer's recommendation except that it shall not be vented to the engine exhaust system. Crankcase breathers, if provided on engines installed in buildings or enclosures, shall be piped to vent to the outside. The system shall be readily accessible for service such as draining, refilling, etc. Each system shall permit addition of oil and have oil-level indication with the set operating. The system shall utilize an oil cooler as recommended by the engine manufacturer.

2.4.1 Lube-Oil Filter

One full-flow filter shall be provided for each pump. The filter shall be readily accessible and capable of being changed without disconnecting the piping or disturbing other components. The filter shall have inlet and outlet connections plainly marked.

2.4.2 Lube-Oil Sensors

Each engine shall be equipped with lube-oil pressure sensors. Pressure sensors shall be located downstream of the filters and provide signals for required indication and alarms.

2.5 COOLING SYSTEM

Each engine shall have its own cooling system. Each system shall operate automatically while its engine is running. The cooling system coolant shall use a combination of water and ethylene-glycol sufficient for freeze protection at the minimum winter outdoor temperature specified. The maximum temperature rise of the coolant across each engine shall not exceed that recommended and submitted in paragraph SUBMITTALS.

2.5.1 Coolant Pumps

Coolant pumps shall be the centrifugal type. Each engine shall have engine-driven primary pumps.

2.5.2 Heat Exchanger

Each heat exchanger shall be of a size and capacity to limit the maximum allowable temperature rise in the coolant across the engine to that recommended and submitted in paragraph SUBMITTALS for the maximum summer outdoor design temperature and site elevation. Each heat exchanger shall be corrosion resistant, suitable for service in ambient conditions of application.

2.5.2.1 Fin-Tube-Type Heat Exchanger (Radiator)

Heat exchanger may be factory coated with corrosive resistant film, provided that correction measures are taken to restore the heat rejection capability of the radiator to the initial design requirement via over sizing, or other compensating methods. Internal surfaces shall be compatible with liquid fluid coolant used. Materials and coolant are subject to approval by the Contracting Officer. Heat exchangers shall be pressure type incorporating a pressure valve, vacuum valve and a cap. Caps shall be designed for pressure relief prior to removal. Each heat exchanger and the entire cooling system shall be capable of withstanding a minimum pressure of 48 kPa (7 psi) and shall be protected with a strong grille or screen guard. Each heat exchanger shall have at least two tapped holes; one tapped hole shall be equipped with a drain cock, the rest shall be plugged.

The outside mean design ambient temperature at the project altitude is 95 degrees F/35 degrees C. At times it is possible for the outside air to exceed the 35 degrees C. Temperatures in the range of 104 degrees F/40 degrees C. is probable. The openings through the building exterior wall are sized generically for a standard radiator provided with the specified engine. If the radiator actually used is larger/smaller than the openings allowed for on the drawings, the openings will be adjusted to properly accommodate the actual radiator being provided. Shop drawings are to be submitted indicating any building changes for approval by the project structural engineer.

2.5.3 Thermostatic Control Valve

A modulating type, thermostatic control valve shall be provided in the

coolant system to maintain the coolant temperature range submitted in paragraph SUBMITTALS.

2.5.4 Ductwork

Ductwork shall be as specified in Section 15895 AIR SUPPLY, DISTRIBUTION, VENTILATION, AND EXHAUST SYSTEM except that a flexible connection shall be used to connect the duct to the diesel engine radiator. Material for the connection shall be wire-reinforced glass. The connection shall be rendered as airtight as possible.

2.5.5 Temperature Sensors

Each engine shall be equipped with coolant temperature sensors. Temperature sensors shall provide signals for pre-low, pre-high and high indication and alarms.

2.6 AIR INTAKE EQUIPMENT

Filters and silencers shall be provided in locations that are convenient for servicing. The silencer shall be of the high-frequency filter type, located in the air intake system as recommended by the engine manufacturer. Silencer shall be capable of reducing the noise level at the air intake so that the indicated pressure levels specified in paragraph SOUND LIMITATIONS will not be exceeded. A combined filter-silencer unit meeting requirements for the separate filter and silencer items may be provided. Expansion elements in air-intake lines shall be copper.

2.7 EXHAUST SYSTEM

The system shall be separate and complete for each engine. Piping shall be supported to minimize vibration. Where a V-type engine is provided, necessary flexible sections and hardware, shall be provided.

2.7.1 Flexible Sections and Expansion Joints(Dual Flex Connections)

A flexible section shall be provided at each engine and an expansion joint at each muffler. Flexible sections and expansion joints shall have flanged connections. Flexible sections shall be made of convoluted seamless tube without joints or packing. Expansion joints shall be the bellows type. Expansion and flexible elements shall be stainless steel suitable for diesel-engine exhaust gas at the maximum exhaust temperature that is specified by the engine manufacturer. Expansion and flexible elements shall be capable of absorbing vibration from the engine and compensation for thermal expansion and contraction.

2.7.2 Exhaust Muffler(Dual mufflers for prime generators)

A chamber type exhaust muffler shall be provided. The muffler shall be constructed of welded steel and designed for inside horizontal mounting. Eyebolts, lugs, flanges, or other items shall be provided as necessary for support in the location and position indicated. Pressure drop through the muffler shall not exceed the recommendations of the engine manufacturer. Outside mufflers shall be zinc coated or painted with high temperature 800 degrees C resisting paint. The muffler and exhaust piping together shall reduce the noise level to less than the maximum acceptable level listed for sound limitations in paragraph SOUND LIMITATIONS. The muffler shall have a drain valve, nipple, and cap at the low-point of the muffler.

2.7.3 Exhaust Piping

Horizontal sections of exhaust piping shall be sloped downward away from the engine to a drip leg for collection of condensate with drain valve and cap. Changes in direction shall be long radius. Exhaust piping, mufflers and silencers installed inside any building shall be fully insulated with 100 mm (4 inches) calcium silicate insulation or High density RockWool and covered with aluminum protective jacket and covered to protect personnel. Vertical exhaust piping shall be provided with a hinged, gravity-operated, self-closing, rain cover.

2.8 STARTING SYSTEM

The starting system for engine generator sets used in non-emergency applications shall be as follows.

2.8.1 Controls

An engine control switch shall be provided with functions including: run/start(manual), off/reset, and, automatic mode. Start-stop logic shall be provided for adjustable cycle cranking and cooldown operation. The logic shall be arranged for fully automatic starting in accordance with paragraph AUTOMATIC ENGINE-GENERATOR-SET SYSTEM OPERATION. Electrical starting systems shall be provided with an adjustable cranking limit device to limit cranking periods from 1 second up to the maximum duration.

2.8.2 Capacity

The starting system shall be of sufficient capacity, at the maximum outdoor summer temperature specified to crank the engine without damage or overheating. The system shall be capable of providing a minimum of three cranking periods with 15 second intervals between cranks. Each cranking period shall have a maximum duration of 15 seconds.

2.8.3 Electrical Starting

Manufacturers recommended dc system, utilizing a negative circuit ground.

2.8.3.1 Battery

A starting battery system shall be provided and shall include the battery, corrosion-resistant battery rack, intercell connectors, spacers, automatic battery charger with overcurrent protection, metering and relaying. The battery shall be in accordance with SAE J537. Critical system components (rack, protection, etc.) shall be sized to withstand the seismic acceleration forces specified. The battery shall be lead-acid , with sufficient capacity, at the minimum outdoor and maximum outdoor temperature specified, to provide the specified cranking periods. Valve-regulated lead-acid batteries are not acceptable.

Batteries:

Capacity: 1300 cold-cranking amps; 400 minute reserve capacity.

Quantity: Four.

Arrangement: One set of two batteries in parallel (for 24 vdc output).

2.8.3.2 Battery Charging

Engine-mounted, 24 vdc, 55 amp alternator.

2.8.4 Starting Aids

The manufacturer shall provide one or more of other following methods to assist engine starting.

2.8.4.1 Jacket-Coolant Heaters

A thermostatically controlled electric heater shall be mounted in the engine coolant jacketing to automatically maintain the coolant within plus or minus 1.7 degrees C temperature. The heater shall operate independently of engine operation so that starting times are minimized. Power for the heaters shall be rated at 5000 watts at 220 volts ac, 50 Hz, 1 phase.

a. Prime Rated Sets

The control temperature shall be the higher of the manufacturer's recommended temperature or the minimum coolant inlet temperature of the engine recommended in paragraph SUBMITTALS.

2.9 GOVERNOR

Each engine shall be provided with a governor which maintains the frequency within a bandwidth of the rated frequency, over a steady-state load range of zero to 100% of rated output capacity. The governor shall be configured for safe manual only adjustment of the speed/frequency during operation of the engine-generator set, without special tools, from 90 to 110% of the rated speed/frequency, over a steady state load range of 0 to 100% or rated capacity.

2.9.1 Governor Performance

Isochronous governors shall maintain the midpoint of the frequency bandwidth at the same value for steady-state loads over the range of zero to 100% of rated output capacity.

2.10 GENERATOR

Each generator shall be of the synchronous type, single bearing, close coupled type, conforming to NEMA MG 1, equipped with winding terminal housings in accordance with NEMA MG 1 equipped with an amortisseur winding, and directly connected to the engine. Insulation shall be Class H. Generator design shall protect against mechanical, electrical and thermal damage due to vibration, 25% overspeeds, or voltages and temperatures at a rated output capacity of 110% for prime applications and 100% for standby applications. Generator ancillary equipment shall meet the short circuit requirements of NEMA MG 1. Frames shall be the drip-proof type.

2.10.1 Current Balance

At 100% rated output capacity, and load impedance equal for each of the 3 phases, the permissible current difference between any 2 phases shall not exceed 2% of the largest current on either of the 2 phases.

2.10.2 Voltage Balance

At any balanced load between 75 and 100% of rated output capacity, the difference in line-to-neutral voltage among the 3 phases shall not exceed 1% of the average line-to-neutral voltage. For a single-phase load condition, consisting of 25% load at unity power factor placed between any phase and neutral with no load on the other 2 phases, the maximum simultaneous difference in line-to-neutral voltage between the phases shall not exceed 3% of rated line to neutral voltage. The single-phase load requirement shall be valid utilizing normal exciter and regulator control. The interpretation of the 25% load for single phase load conditions means 25% of rated current at rated phase voltage and unity power factor.

2.10.3 Waveform

The deviation factor of the line-to-line voltage at zero load and at balanced rated output capacity shall not exceed 10%. The RMS of all harmonics shall be less than 5.0% and that of any one harmonic less than 3.0% of the fundamental at rated output capacity. Each engine-generator shall be designed and configured to meet the total harmonic distortion limits of IEEE Std 519.

2.11 EXCITER

The generator exciter shall be of the brushless type. Semiconductor rectifiers shall have a minimum safety factor of 300% for peak inverse voltage and forward current ratings for all operating conditions, including 110% generator output at 4O degrees C ambient. The exciter and regulator in combination shall maintain generator-output voltage within the limits specified.

2.12 VOLTAGE REGULATOR

Each generator shall be provided with a solid-state voltage regulator, separate from the exciter. The regulator shall maintain the voltage within a bandwidth of the rated voltage, over a steady-state load range of zero to 100% of rated output capacity. Regulator shall be configured for safe manual only adjustment of the engine-generator voltage output without special tools, during operation, from 90 to 110% of the rated voltage over the steady state load range of 0 to 100% of rated output capacity. Regulation drift shall not exceed plus or minus 0.5% for an ambient temperature change of 20 degrees C. Reactive droop compensation or reactive differential compensation shall load share the reactive load proportionally between sets during parallel operation.

2.12.1 Steady State Performance (Regulation or Voltage Droop)

The voltage regulator shall have a maximum droop of 2% of rated voltage over a load range from 0 to 100% of rated output capacity and automatically maintain the generator output voltage within the specified operational bandwidth.

2.13 GENERATOR ISOLATION AND PROTECTION (PRIME)

Devices necessary for electrical protection and isolation of each engine-generator set and its ancillary equipment shall be provided. The generator circuit breaker (IEEE Device 52) ratings shall be consistent with the generator rated voltage and frequency, with continuous, short circuit withstand, and interrupting current ratings to match the generator

capacity. The generator circuit breaker shall be operated as indicated. A set of surge capacitors, to be mounted at the generator terminals shall be provided. Monitoring and control devices shall be as specified in paragraph GENERATOR PANEL.

2.14 SAFETY SYSTEM

Devices, wiring, remote panels, local panels, etc. shall be provided and installed as a complete system to automatically activate the appropriate signals and initiate the appropriate actions. The safety system shall be provided with a self-test method to verify its operability. Alarm signals shall have manual acknowledgment and reset devices. The alarm signal systems shall reactivate for new signals after acknowledgment is given to any signal. The systems shall be configured so that loss of any monitoring device shall be dealt with as an alarm on that system element.

2.14.1 Audible Signal

The audible alarm signal shall be continuously activated upon alarm and silenced upon acknowledgment. Signal devices shall be located as shown.

2.14.2 Visual Signal

The visual alarm signal shall be a panel light. The light shall be normally off, activated to be blinking upon alarm. The light shall change to continuously lit upon acknowledgement. If automatic shutdown occurs, the display shall maintain activated status to indicate the cause of failure and shall not be reset until cause of alarm has been cleared and/or restored to normal condition. Shutdown alarms shall be red; all other alarms shall be amber.

2.14.3 Alarms and Action Logic

2.14.3.1 Shutdown

Simultaneous activation of the audible signal, activation of the visual signal, stopping the engine, and opening the generator main circuit breakers shall be accomplished.

2.14.3.2 Problem

Activation of the visual signal shall be accomplished.

2.14.4 Local Alarm Panel

A local alarm panel shall be provided with the following shutdown and alarm functions in accordance with NFPA 99 and including the listed Corps of Engineer requirements mounted either on or adjacent to the engine generator set.

2.14.5 Time-Delay on Alarms

For startup of the engine-generator set, time-delay devices shall be installed bypassing the low lubricating oil pressure alarm during cranking, and the coolant-fluid outlet temperature alarm. The lube-oil time-delay device shall return its alarm to normal status after the engine starts. The coolant time-delay device shall return its alarm to normal status 5 minutes after the engine starts.

2.15 ENGINE GENERATOR SET CONTROLS AND INSTRUMENTATION

Devices, wiring, remote panels, local panels, etc. shall be provided and installed as a complete system to automatically activate the appropriate signals and initiate the appropriate actions.

2.15.1 Controls

A local control panel shall be provided with controls as follows.

High coolant temperature, low oil pressure, and low water temperature alarms.

High coolant temperature, low oil pressure, and engine overspeed and overcrank shutdowns.

Engine instrumentation for coolant temperature, oil pressure, run hour, DC voltage indicator and emergency shutdown.

Generator instrumentation for AC volts, amps, frequency, kW, kVA, kVAR, kWhr, PF, and percent of rated load.

2.15.2 Engine Generator Set Metering and Status Indication

A local panel shall be provided.

2.16 GENERATOR SYNCHRONIZING/CONTROL SWITCHBOARD (PRIME)

2.17 PANELS

Each panel shall be of the type and kind necessary to provide specified functions. Panels shall be mounted as shown. Instruments shall be mounted flush or semiflush. Convenient access to the back of panels shall be provided to facilitate maintenance. Instruments shall be calibrated using recognized industry calibration standards. Each panel shall be provided with a panel identification plate which clearly identifies the panel function. Each instrument and device on the panel shall be provided with a plate which clearly identifies the device and its function as indicated. Switch plates shall clearly identify the switch-position function.

2.17.1 Enclosures

Enclosures shall be designed for the application and environment.

2.17.2 Analog

Analog electrical indicating instruments shall be in accordance with ANSI C39.1 with semiflush mounting. Switchboard, switchgear, and control-room panel-mounted instruments shall have 250 degree scales with an accuracy of not less than 99%. Unit-mounted instruments shall be the manufacturer's standard with an accuracy of not less than 98%. The instrument's operating temperature range shall be minus 20 to plus 65 degrees C. Distorted generator output voltage waveform of a crest factor less than 5 shall not affect metering accuracy for phase voltages, hertz and amps.

2.17.3 Electronic

Electronic indicating instruments shall be true RMS indicating instruments,

100% solid state, state-of-the-art, microprocessor controlled to provide specified functions. Control, logic, and function devices shall be compatible as a system, sealed, dust and water tight, and shall utilize modular components with metal housings and digital instrumentation. An interface module shall be provided to decode serial link data from the electronic panel and translate alarm, fault and status conditions to set of relay contacts. Instrument accuracy shall be not less than 98% for unit mounted devices and 99% for control room, panel mounted devices, throughout a temperature range of minus 20 to plus 65 degrees C. Data display shall utilize LED or back lit LCD. Additionally, the display shall provide indication of cycle programming and diagnostic codes for troubleshooting. Numeral height shall be 13 mm .

2.17.4 Parameter Display

Indication or readouts of the tachometer, lubricating-oil pressure, ac voltmeter, ac ammeter, frequency meter, and safety system parameters shall be provided. A momentary switch shall be specified for other panels.

2.18 MANUAL ENGINE-GENERATOR-SET SYSTEM OPERATION

Complete facilities shall be provided for manual starting and testing of each set without load, loading and unloading of each set, and synchronization of each set with an energized bus.

2.19 BASE

The base shall be constructed of structural steel. The base shall be designed to rigidly support the engine-generator set, ensure permanent alignment of rotating parts, be arranged to provide easy access to allow changing of lube-oil, and ensure that alignment is maintained during shipping and normal operation. The base shall permit skidding in any direction during installation and shall withstand and mitigate the affects of synchronous vibration of the engine and generator. The base shall be provided with suitable holes for anchor bolts and jacking screws for leveling.

2.20 THERMAL INSULATION

Thermal insulation shall be as specified in Section 15080 THERMAL INSULATION FOR MECHANICAL SYSTEMS.

2.21 PAINTING AND FINISHING

The engine-generator set shall be cleaned, primed and painted in accordance with the manufacturer's standard color and practice.

2.22 FACTORY INSPECTION AND TESTS

The factory tests shall be performed on each engine-generator set. The component manufacturer's production line test is acceptable as noted. Each engine-generator set shall be run not less than 1 hour at rated output capacity prior to inspections. Inspections shall be completed and all necessary repairs made, prior to testing. Engine generator controls and protective devices that are provided by the generator set manufacturer as part of the standard package shall be used for factory tests. When controls and switchgear are not provided as part of the generator set manufacturer's standard package, the actual controls and protective devices provided for the project are not required to be used during the factory

test. The Contracting Officer may provide one or more representatives to witness inspections and tests.

2.22.1 Factory Inspection

Inspections shall be performed prior to beginning and after completion of testing of the assembled engine-generator set. Inspectors shall look for leaks, looseness, defects in components, proper assembly, etc. and any item found to be in need of correction shall be noted as a necessary repair. The following checklist shall be used for the inspection:

INSPECTION ITEM	GOOD	BAD	NOTES
a. Drive belts			
b. Governor and adjustments			
c. Engine timing mark			
d. Starting motor			
e. Starting aids			
f. Coolant type and concentration			
g. Radiator drains			
h. Block coolant drains			
i. Coolant fill level			
j. All coolant line connections			
k. All coolant hoses			
l. Combustion air filter			
m. Combustion air silencer			
n. Lube oil type			
o. Lube oil sump drain			
p. Lube-oil filter			
q. Lube-oil-level indicator			
r. Lube-oil-fill level			
s. All lube-oil line connections			
t. All lube-oil lines			
u. Fuel type and amount			
v. All fuel-line connections			
w. All fuel lines			
x. Fuel filter			
y. Coupling and shaft alignment			
z. Voltage regulators			
aa. Battery-charger connections			
bb. All wiring connections			
cc. Instrumentation			
dd. Hazards to personnel			
ee. Base			
ff. Nameplates			
gg. Paint			
hh. Exhaust-heat recovery unit			
ii. Switchboard			
jj. Switchgear			

2.22.2 Factory Tests

On engine-generator set tests where the engine and generator are required to be connected and operated together, the load power factor shall be the power factor specified in the engine generator set parameter schedule. For engine-generator set with dual-fuel operating capability the following tests shall be performed using the primary fuel type. Electrical measurements shall be performed in accordance with IEEE Std 120. Definitions of terms are in accordance with IEEE Std 100. Temperature

limits in the rating of electrical equipment and for the evaluation of electrical insulation shall be in accordance with IEEE Std 1. In the following tests where measurements are to be recorded after stabilization of an engine-generator set parameter (voltage, frequency, current, temperature, etc.), stabilization is considered to have occurred when measurements are maintained within the specified bandwidths or tolerances, for a minimum of four consecutive readings. Tests specifically for the generator may be performed utilizing any prime mover.

a. Insulation Resistance for Stator and Exciter Test, IEEE Std 115 and IEEE Std 43, to the performance criteria in NEMA MG 1, Part 22. Generator manufacturer's production line test is acceptable.

b. High Potential Test, per IEEE Std 115 and NEMA MG 1, test voltage in accordance with NEMA MG 1. Generator manufacturer's production line test is acceptable.

c. Winding Resistance Test, Stator and Exciter, per IEEE Std 115. Generator manufacturer's production line test is acceptable.

d. Overspeed Vibration Test, per IEEE Std 115 to the performance criteria in NEMA MG 1. The test shall be performed at 110% of rated speed for 5 minutes. The vibration shall be measured at the end bearings (front and back of engine, outboard end of generator) in the horizontal, vertical, and axial directions. Vibration amplitude and speed shall be recorded at one minute intervals.

e. Phase Balance Voltage Test, to the performance criteria specified in paragraph GENERATOR. This test can be performed with any prime mover. Generator manufacturer's production line test results are acceptable.

(1) Start and operate the generator at no load.

(2) Adjust a regulated phase voltage (line-to-neutral) to rated voltage.

(3) Read and record the generator frequency, line-to-neutral voltages, and the line-to-line voltages.

(4) Apply 75% rated load and record the generator frequency, line-to-neutral voltages, and the line-to-line voltages.

(5) Apply rated load and record the generator frequency, line-to-neutral voltages, and the line-to-line voltages.

(6) Calculate average line-neutral voltage and percent deviation of individual line-neutral voltages from average for each load condition.

f. Current Balance on Stator Winding Test, by measuring the current on each phase of the winding with the generator operating at 100 % of Rated Output Capacity, with the load impedance equal for each of the three phases: to the performance criteria specified in paragraph GENERATOR.

g. Voltage Waveform Deviation and Distortion Test per IEEE Std 115 to the performance criteria specified in paragraph GENERATOR. High-speed recording instruments capable of recording voltage

waveform deviation and all distortion, including harmonic distortion shall be used. Representation of results shall include appropriate scales to provide a means to measure and interpret results.

h. Voltage and Frequency Droop Test. Verify that the output voltage and frequency are within the specified parameters as follows:

(1.) With the generator operating at no load, adjust voltage and frequency to rated voltage and frequency. Record the generator output frequency and line-line and line-neutral voltages.

(2.) Increase load to Rated Output Capacity. Record the generator output frequency and line-line and line-neutral voltages.

(3.) Calculate the percent droop for voltage and frequency with the following equations:

$$\text{Voltage droop \%} = \frac{\text{(No-Load Volts)} - \text{(Rated Capacity volts)}}{\text{(Service-Load Volts)}} \times 100$$

$$\text{Frequency droop \%} = \frac{\text{(No-Load Hertz)} - \text{(Rated Capacity hertz)}}{\text{(Service-Load hertz)}} \times 100$$

4. Repeat steps 1 through 3 two additional times without making any adjustments.

i. Frequency and Voltage Stability and Transient Response. Verify that the engine-generator set responds to addition and dropping of blocks of load in accordance with the transient response requirements. Document maximum voltage and frequency variation from bandwidth and verify that voltage and frequency return to and stabilize within the specified bandwidth, within the specified response time period. Document results in tabular form and with high resolution, high speed strip chart recorders or comparable digital recorders, as approved by the Contracting Officer. Tabular data shall include the following:

Ambient temperature (at 15 minute intervals).

Generator output current (before and after load changes).

Generator output voltage (before and after load changes).

Frequency (before and after load changes).

Generator output power (before and after load changes).

Graphic representations shall include the actual instrument trace of voltage and frequency showing: charts marked at start of test; observed steady-state band; mean of observed band; momentary overshoot and undershoot (generator terminal voltage and frequency) and recovery time for each load change together with the voltage and frequency maximum and minimum trace excursions for each steady state load condition prior to and immediately following each load change. Generator terminal voltage and frequency transient recovery time for each step load increase and

decrease.

(1.) Perform and record engine manufacturer's recommended prestarting checks and inspections.

(2.) Start the engine, make and record engine manufacturer's after-starting checks and inspections during a reasonable warm-up period and no load. Verify stabilization of voltage and frequency within specified bandwidths.

(3.) With the unit at no load, apply the Maximum Step Load Increase.

(4.) Apply load in steps equal to the Maximum Step Load Increase until the addition of one more step increase will exceed the Service Load.

(5.) Decrease load to the unit such that addition of the Maximum Step Load Increase will load the unit to 100% of Service Load.

(6.) Apply the Maximum Step Load Increase.

(7.) Decrease load to zero percent in steps equal to the Maximum Step Load Decrease.

(8.) Repeat steps 3. through 7.

i. Test Voltage Unbalance with Unbalanced Load (Line-to-Neutral) to the performance criteria specified in paragraph GENERATOR. Prototype test data is acceptable in lieu of the actual test. This test may be performed using any prime mover.

(1.) Start and operate the generator set at rate voltage, no load, rated frequency, and under control of the voltage regulator. Read and record the generator frequency, line-to-neutral voltages, and the line-to-line voltages.

(2.) Apply the specified load between terminals L1-L2, L2-L0, and L3-L0 in turn. Record all instrument readings at each line-neutral condition.

(3.) Express the greatest difference between any two of the line-to-line voltages and any two of the line-to-neutral voltages as a percent of rated voltage.

(4.) Compare the largest differences expressed in percent with the maximum allowable difference specified.

2.23 RESISTIVE LOAD BANK

2.23.1 Ratings and Components

Load bank shall be rated 1000 kW, 380 Volt, three phase, three wire, 50 Hz, and power factor 1.0 (resistive).

Load bank shall consist of outdoor load resistors, power control devices, cooling fan, and an indoor wall mounted operator interface panel.

2.23.2 Outdoor Unit

The outdoor resistors, controls, and fan shall be housed in a NEMA 3R weatherproof enclosure. The exhaust louvers shall be fabricated of stainless steel. The cooling fan shall be forced air and power being internally derived from the connected test power source. The load resistors shall be mounted independently so that removal of any resistor does not affect the operation of the load bank.

2.23.3 Indoor Unit

The indoor panel enclosure shall be NEMA-12. The panel shall contain LCD graphic display screen, control keypad, audible input signal, LED operational indicators, and lamp test components.

PART 3 EXECUTION

3.1 GENERAL INSTALLATION

Installation shall provide clear space for operation and maintenancein accordance with NFPA 70 for the Power plant. Installation of pipe, duct, conduit, and ancillary equipment shall be configured to facilitate easy removal and replacement of major components and parts of the engine-generator set.

3.2 PIPING INSTALLATION

Piping shall be welded. Connections at valves shall be flanged. Connections at equipment shall be flanged except that connections to the diesel engine may be threaded if the diesel-engine manufacturers standard connection is threaded. Except where otherwise specified, welded flanged fittings shall be utilized to allow for complete dismantling and removal of each piping system from the facility without disconnecting or removing any portion of any other system's equipment or piping. Connections to equipment shall be made with vibration-isolation-type flexible connectors. Piping and tubing shall be supported and aligned to prevent stressing of flexible hoses and connectors. Pipes extending through the roof shall be properly flashed. Piping shall be installed clear of windows, doors and openings, to permit thermal expansion and contraction without damage to joints or hangers, and shall be installed with a 15 mm (1/2 inch) drain valve with cap at each low point.

3.2.1 Support

Hangers, inserts, and supports shall be of sufficient size to accommodate any insulation and shall conform to MSS SP-58 and MSS SP-69. Supports shall be spaced not more than 2.1 m on center for pipes 50 mm (2 inches) in diameter or less, not more than 3.6 m on center for pipes larger than 50 mm (2 inches) but smaller than 100 mm (4 inches) in diameter, and not more than 5.2 m on center for pipes larger than 100 mm in diameter. Supports shall be provided at pipe bends or change of direction.

3.2.1.1 Ceiling and Roof

Exhaust piping shall be supported with appropriately sized Type 41 single pipe roll and threaded rods; all other piping shall be supported with appropriately sized Type 1 clevis and threaded rods.

3.2.1.2 Wall

Wall supports for pipe shall be made by suspending the pipe from appropriately sized Type 33 brackets with the appropriate ceiling and roof pipe supports.

3.2.2 Flanged Joints

Flanges shall be Class 125 type, drilled, and of the proper size and configuration to match the equipment and diesel engine connections. Flanged joints shall be gasketed and made up square and tight.

3.2.3 Cleaning

After fabrication and before assembly, piping interiors shall be manually wiped clean of debris.

3.2.4 Pipe Sleeves

Pipes passing through construction such as ceilings, floors, or walls shall be fitted with sleeves. Each sleeve shall extend through and be securely fastened in its respective structure and shall be cut flush with each surface. The structure shall be built tightly to the sleeve. The inside diameter of each sleeve shall be minimum 15 mm (1/2 inch), and where pipes pass through combustible materials 25 mm (1 inch) larger than the outside diameter of the passing pipe or pipe insulation/covering.

3.3 ELECTRICAL INSTALLATION

Electrical installation shall comply with NFPA 70 for the Power plant, and Section 16402 INTERIOR DISTRIBUTION SYSTEM.

3.3.1 Vibration Isolation

Flexible fittings shall be provided for conduit, cable trays, and raceways attached to engine-generator sets. Metallic conductor cables installed on the engine generator set and from the engine generator set to equipment not mounted on the engine generator set shall be flexible stranded conductor. Terminations of conductors on the engine generator set shall be crimp-type terminals or lugs.

3.4 ONSITE INSPECTION AND TESTS

3.4.1 Test Conditions

3.4.1.1 Data

Measurements shall be made and recorded of all parameters necessary to verify that each set meets specified parameters. If the results of any test step are not satisfactory, adjustments, replacements, or repairs shall be made and the step repeated until satisfactory results are obtained. Unless otherwise indicated, data shall be recorded in 15 minute intervals during engine-generator set operation and shall include: readings of all engine-generator set meters and gauges for electrical and power parameters; oil pressure; ambient temperature; and engine temperatures available from meters and gauges supplied as permanent equipment on the engine-generator set.Electrical measurements shall be performed in accordance with IEEE Std 120. Definitions of terms are in accordance with IEEE Std 100. Temperature limits in the rating of electrical equipment and for the

evaluation of electrical insulations shall be in accordance with IEEE Std 1.

3.4.1.2 Contractor Supplied Items

The Contractor shall provide equipment and supplies required for inspections and tests including fuel, test instruments, and loadbanks at the specified power factors.

3.4.1.3 Instruments

Readings of panel gauges, meters, displays, and instruments provided as permanent equipment shall be verified during test runs, using test instruments of greater precision and accuracy. Test instrument accuracy shall be within the following: current plus or minus 1.5%, voltage plus or minus 1.5%, real power plus or minus 1.5%, reactive power plus or minus 1.5%, power factor plus or minus 3%, frequency plus or minus 0.5%. Test instruments shall be calibrated by a recognized standards laboratory within 30 days prior to testing.

3.4.1.4 Sequence

The sequence of testing shall be as specified in the approved testing plan unless variance is authorized by the Contracting Officer. Field testing shall be performed in the presence of the Contracting Officer. Tests may be scheduled and sequenced in order to optimize run-time periods; however, the following general order of testing shall be followed: Construction Tests; Inspections; Pre-operational Tests; Safety Run Tests; Performance Tests; and Final Inspection.

3.4.2 Construction Tests

Individual component and equipment functional tests for fuel piping, coolant piping, and lubricating-oil piping, electrical circuit continuity, insulation resistance, circuit protective devices, and equipment not provided by the engine-generator set manufacturer shall be performed prior to connection to the engine-generator set.

3.4.2.1 Piping Test

a. Lube-oil and fuel-oil piping shall be flushed with the same type of fluid intended to flow through the piping, until the outflowing fluid has no obvious sediment or emulsion.

b. Fuel piping which is external to the engine-generator set shall be tested in accordance with NFPA 30 for the Power plant. All remaining piping which is external to the engine-generator set shall be pressure tested with air pressure at 150% of the maximum anticipated working pressure, but not less than 1.03 MPa, for a period of 2 hours to prove the piping has no leaks. If piping is to be insulated, the test shall be performed before the insulation is applied.

3.4.2.2 Electrical Equipment Tests

a. Low-voltage cable insulation integrity tests shall be performed for cables connecting the generator breaker to the distribution bus. Low-voltage cable, complete with splices, shall be tested for insulation resistance after the cables are installed, in their final configuration, ready for connection to the equipment, and

prior to energization. The test voltage shall be 500 volts dc, applied for one minute between each conductor and ground and between all possible combinations conductors in the same trench, duct, or cable, with all other conductors in the same trench, duct, or conduit. The minimum value of insulation shall be:

R in megohms = (rated voltage in kV + 1) x 304,800/(length of cable in meters)

R in megohms = (rated voltage in kV + 1) x 1000/(length of cable in feet)

Each cable failing this test shall be repaired or replaced. The repair cable shall be retested until failures have been eliminated.

d. Circuit breakers and switchgear shall be examined and tested in accordance with the manufacturer's published instructions for functional testing.

3.4.3 Inspections

The following inspections shall be performed jointly by the Contracting Officer and the Contractor, after complete installation of each engine-generator set and its associated equipment, and prior to startup of the engine-generator set. Checks applicable to the installation shall be performed. The results of those which are physical inspections (I) shall be documented by the Contractor and submitted in accordance with paragraph SUBMITTALS. The Contractor shall present manufacturer's data for the inspections designated (D) at the time of inspection. Inspections shall verify that equipment type, features, accessibility, installation and condition are in accordance with the contract specification. Manufacturer's statements shall certify provision of features which cannot be verified visually.

1.	Drive belts.	(I)
2.	Governor type and features.	(I)
3.	Engine timing mark.	(I)
4.	Starting motor.	(I)
5.	Starting aids.	(I)
6.	Coolant type and concentration.	(D)
7.	Radiator drains.	(I)
8.	Block coolant drains.	(I)
9.	Coolant fill level.	(I)
10.	Coolant line connections.	(I)
11.	Coolant hoses.	(I)
12.	Combustion air filter.	(I)
13.	Intake air silencer.	(I)
14.	Lube oil type.	(D)
15.	Lube oil sump drain.	(I)
16.	Lube-oil filter.	(I)
17.	Lube-oil level indicator.	(I)
18.	Lube-oil fill level.	(I)
19.	Lube-oil line connections.	(I)
20.	Lube-oil lines.	(I)
21.	Fuel type.	(D)
22.	Fuel-level.	(I)
23.	Fuel-line connections.	(I)
24.	Fuel lines.	(I)
25.	Fuel filter.	(I)

26. Access for maintenance. (I)
27. Voltage regulator. (I)
28. Battery-charger connections. (I)
29. Wiring & terminations. (I)
30. Instrumentation. (I)
31. Hazards to personnel. (I)
32. Base. (I)
33. Nameplates. (I)
34. Paint. (I)
35. Exhaust-heat system. (I)
36. Exhaust muffler. (I)
37. Switchboard. (I)
38. Switchgear. (I)
39. Access provided to controls. (I)
40. Enclosure is weather resistant. (I)
41. Engine & generator mounting bolts (application). (I)

3.4.4 Pre-operational Tests

3.4.4.1 Protective Relays

Protective relays shall be visually and mechanically inspected, adjusted, tested, and calibrated in accordance with the manufacturer's published instructions. Tests shall include pick-up, timing, contact action, restraint, and other aspects necessary to ensure proper calibration and operation. Relay settings shall be implemented in accordance with the installation coordination study. Relay contacts shall be manually or electrically operated to verify that the proper breakers and alarms initiate. Relaying current transformers shall be field tested in accordance with IEEE C57.13.1.

3.4.4.2 Engine-Generator Connection Coupling Test

When the generator provided is a two-bearing machine, the engine-generator connection coupling shall be inspected and checked by dial indicator to prove that no misalignment has occurred. The dial indicator shall measure variation in radial positioning and axial clearance between the coupling halves. Readings shall be taken at four points, spaced 90 degrees apart. Solid couplings and pin-type flexible couplings shall be aligned within a total indicator reading of 0.012 to 0.025 mm for both parallel and angular misalignment. For gear-type or grid-type couplings, 0.05 mm will be acceptable.

3.4.5 Safety Run Test

For the following tests, if any parts are changed, or adjustments made to the generator set, its controls, or auxiliaries, the associated safety tests shall be repeated.

a. Start the engine, record the starting time, make and record engine manufacturer's after-starting checks and inspections during a reasonable warm-up period.

b. Operate the engine generator-set for at least 2 hours at 75% of Service Load.

c. Verify proper operation and setpoints of gauges and instruments.

d. Verify proper operation of ancillary equipment.

e. Manually adjust the governor to increase engine speed past the overspeed limit. Record the RPM at which the engine shuts down.

f. Start the engine, record the starting time, make and record engine manufacturer's after-starting checks and inspections and operate the engine generator-set for at least 15 minutes at 75% of Service Load.

g. Manually adjust the governor to increase engine speed to within 2% of the overspeed trip speed previously determined and operate at that point for 5 minutes. Manually adjust the governor to the rated frequency.

h. Shut down the engine. Remove the time-delay low lube oil pressure alarm bypass and try to start the engine.

i. Start the engine, record the starting time, make and record engine manufacturer's after-starting checks and inspections and operate the engine generator-set for at least 15 minutes at 75% of Service Load.

j. Close the manifold shutoff valve. Slowly allow the pressure in the manifold to bleed off through the bleed valve while watching the pressure gauge. Record the pressure at which the engine shuts down. Catch oil spillage from the bleed valve in a container. Add the oil from the container back to the engine, remove the manifold, and reinstall the engine's oil pressure sensor on the engine.

k. Start the engine, record the starting time, make and record engine manufacturer's after-starting checks and inspections and operate the engine generator-set for at least 15 minutes at 100% of Service Load. If a sound limiting enclosure is provided, the enclosure, the muffler, and intake silencer shall be modified or replaced as required to meet the sound requirements contained within this specification.

3.4.6 Performance Tests

In the following tests, where measurements are to be recorded after stabilization of an engine-generator set parameter (voltage, frequency, current, temperature, etc.), stabilization is considered to have occurred when measurements are maintained within the specified bandwidths or tolerances, for a minimum of four consecutive readings. For the following tests, if any parts are changed, or adjustments made to the generator set, its controls, or auxiliaries, the associated tests shall be repeated.

3.4.6.1 Continuous Engine Load Run Test

Test the engine-generator set and ancillary systems at service load to demonstrate durability; verify that heat of extended operation does not adversely affect or cause failure in any part of the system; and check all parts of the system. Data taken at 15 minute intervals shall include the following:

Electrical: Output amperes, voltage, real and reactive power, power factor, frequency.

Pressure: Lube-oil.

Temperature: Coolant.
Lube-oil.
Exhaust.
Ambient.

a. Perform and record engine manufacturer's recommended prestarting checks and inspections. Include as a minimum checking of coolant fluid, fuel, and lube-oil levels.

b. Start the engine, make and record engine manufacturer's after-starting checks and inspections during a reasonable warmup period.

c. Operate the engine generator-set for 50 minutes at 75% of Service Load.

d. Increase load to 100% of Service Load and operate the engine generator-set for 1 hour 40 minutes.

e. For prime rated units, increase load to 110% of Service Load and operate the engine generator-set for 50 minutes.

f. Decrease load to 100% of Service Load and operate the engine generator-set for 50 minutes or until all temperatures have stabilized.

g. Remove load from the engine-generator set.

3.4.6.2 Governor Adjustment Range Test

a. While operating at no load, verify that the governor adjusts from 90% to 110% of rated frequency.

b. Increase load to 100% of Rated Output Capacity. Verify that the governor adjusts from 90% to 110% of rated frequency.

3.4.7 Parallel Operation Test

Test the capability of each engine-generator set to parallel and share load with other generator sets, individually and in all combinations. This test must be performed with the voltage regulator and governor adjustment settings used for the Frequency and Voltage Stability and Transient Response test. If settings are changed during the performance of this test, a voltage and frequency stability and transient response test must be performed for each engine generator set using the setting utilized in this test. During operations record load-sharing characteristics of each set in parallel operation. Data taken shall include the following:

(a.) Ambient temperature (at 15 minute intervals).

(b.) Generator output current (before and after load changes).

(c.) Generator output voltage (before and after load changes).

(d.) Power division and exchange between generator sets.

(e.) Real power (watts) and reactive power (vars) on each set.

3.4.7.1 Combinations

Connect each set, while operating at no load, parallel with one other set in the system, operating at service load, until all possible two-unit-in-parallel combinations have been achieved. Verify stabilization of voltage and frequency within specified bandwidths and proportional sharing of real and reactive loads. Document stabilization of voltage and frequency within specified bandwidth, the active power division, active power exchange, reactive power division, and voltage and frequency stability and transient response in the following steps for each combination.

a. Divide the load proportionally between the sets and operate in parallel for 15 minutes.

b. Increase the load, in steps equal to the Maximum Step Increase, until each set is loaded to its service load.

c. Decrease the load, in steps equal to the Maximum Step Decrease, until each set is loaded to approximately 25% of its service load.

d. Increase the load, in steps equal to the Maximum Step Increase, until each set is loaded to approximately 50% of its service load Verify stabilization of voltage and frequency within specified bandwidths and proportional sharing of real and reactive load.

e. Reduce the sum of the loads on both sets to the output rating of the smaller set.

f. Transfer a load equal to the output rating of the smaller of the 2 sets to and from each set. Verify stabilization of voltage and frequency within specified bandwidths and proportional sharing of real and reactive load.

g. Document the active power division, active power exchange, reactive power division, and voltage and frequency stability and transient response .

3.4.7.2 Multiple Combinations

Connect each set, while operating at no load, parallel with all multiple combinations of all other set in the system, while operating at service load, until all multiple combinations of parallel operations have been achieved.

3.4.8 Automatic Operation Tests for Multiple Engine Generator Set Parallel Operation In Standalone Mode

The automatic operating system shall be tested to demonstrate loading and unloading, and paralleling of each engine-generator set. The loads for this test shall utilize load banks at the indicated power factor, and the loading sequence shall be the indicated sequence. During all operations load-sharing characteristics shall be recorded. Perform this test for a minimum of two successive, successful tests. Data taken shall include the following:

(1.) Ambient temperature (at 15 minute intervals).

(2.) Generator output current (before and after load changes).

(3.) Generator output voltage (before and after load changes).

(4.) Generator output frequency (before and after load changes).

(5.) Power division and exchange between generator sets.

(6.) Real and reactive power on each set.

a. Initiate loss of the preferred power source and verify the specified sequence of operation.

b. Verify resetting of automatic starting and transfer logic.

3.4.9 Automatic Operation Tests for Stand-Alone Operation

The automatic loading system shall be tested to demonstrate loading and unloading of each engine-generator set. The loads for this test shall utilize the actual loads to be served, and the loading sequence shall be the indicated sequence. Perform this test for a minimum of two successive, successful tests. Data taken shall include the following:

(a.) Ambient temperature (at 15 minute intervals).

(b.) Generator output current (before and after load changes).

(c.) Generator output voltage (before and after load changes).

(d.) Generator output frequency (before and after load changes).

a. Initiate loss of the primary power source and verify automatic sequence of operation.

b. Restore the primary power source and verify sequence of operation.

c. Verify resetting of controls to normal.

3.4.10 Final Testing and Inspection

a. Start the engine, record the starting time, make and record all engine manufacturer's after-starting checks and inspections during a reasonable warm-up period.

b. Increase the load in steps no greater than the Maximum Step Load Increase to 100% of Service Load, and operate the engine-generator set for at least 30 minutes. Measure the vibration at the end bearings (front and back of engine, outboard end of generator) in the horizontal, vertical, and axial directions. Verify that the vibration is within the same range as previous measurements and is within the required range.

c. Remove load and shut down the engine-generator set after the recommended cool down period.

d. Remove the lube oil filter and have the oil and filter examined by the engine manufacturer for excessive metal, abrasive foreign particles, etc. Any corrective action shall be verified for effectiveness by running the engine for 8 hours at Service Load,

then re-examining the oil and filter.

e. Remove the fuel filter and examine the filter for trash, abrasive foreign particles, etc.

f. Visually inspect and check engine and generator mounting bolts for tightness and visible damage.

g. Replace air, oil, and fuel filters with new filters.

3.5 RESISTIVE LOAD BANK

3.5.1 Mounting

The load bank shall be installed on a concrete pad suitable for supporting the structure.

3.5.2 Wiring

Connect the load bank condutors from the power source to the load bank main bus connection points. Ground the load bank per National Electrical Code.

Connect the load bank control wiring per the manufacturer requirements from the indoor panel to outdoor resistor load bank.

3.6 POSTED DATA AND INSTRUCTIONS

Two sets of instructions/data shall be typed in A 4 format, laminated in weatherproof plastic, and placed in three-ring vinyl binders. The binders shall be placed as directed by the Contracting Officer. The instructions shall be in place prior to acceptance of the engine generator set installation. First set shall include a one-line diagram, wiring and control diagrams and a complete layout of the system. Second set shall include the condensed operating instructions describing manufacturer's pre-start checklist and precautions; startup procedures for test-mode, manual-start mode, and automatic-start mode (as applicable); running checks, procedures, and precautions; and shutdown procedures, checks, and precautions. Instructions shall include procedures for interrelated equipment (such as heat recovery systems, co-generation, load-shedding, and automatic transfer switches).

3.7 ONSITE TRAINING

The Contractor shall conduct training course for operating staff as designated by the Contracting Officer. The training period shall consist of a total 8 hours of normal working time and shall start after the system is functionally completed but prior to final acceptance. All operation and maintenance manuals shall bee approved and made available for the training course. All posted instructions shall be approved and posted prior to the beginning date of the training course. The training course schedule shall be coordinated with the Using Service's work schedule, and submitted for approval 14 days prior to beginning date of proposed beginning date of training. The course instructions shall cover pertinent points involved in operating, starting, stopping, servicing the equipment, as well as major elements of the operation and maintenance manuals. Additionally, the course instructions shall demonstrate routine maintenance procedures as described in the operation and maintenance manuals and installation of spare parts. Two copies of a video tape of the manufacturers operating and maintenance training course shall be submitted.

3.8 ACCEPTANCE

Final acceptance of the engine-generator set will not be given until the contractor has successfully completed all tests and all defects in installation material or operation have been corrected.

-- End of Section --

SECTION 16272

UNIT SUB-STATION TYPE TRANSFORMERS

PART 1 GENERAL

1.1 REFERENCES

The publications listed below form a part of this specification to the extent referenced. The publications are referred to within the text by the basic designation only.

Unless noted otherwise, all material used shall be in compliance with the requirements of the applicable German (DIN) Standards. In the event DIN Standard material is unavailable, contractor may then select comparable British Standard (BS), or Underwriters Laboratories Inc. (UL) listed material. Equipment enclosure types shall be in compliance with the National Electrical Manufacturer's Association (NEMA) or the International Electro-Technical Committee (IEC) standards. Material and equipment installed under this contract shall be for the appropriate application.

AMERICAN NATIONAL STANDARDS INSTITUTE (ANSI)

ANSI C57.12.00	(2000) IEEE Standard General Requirements for Liquid-Immersed Distribution, Power, and Regulating Transformers
ANSI C57.12.70	Terminal Markings and Connections for Distribution and Power Transformers
ANSI C57.12.80	Terminology for Power and Distibution Transformers
ANSI C57.12.90	(1990) Test Code for Liquid-Immersed Distribution, Power and Regulating Transformers and Guide for Short-Circuit Testing of Distribution and Power Transformers
ANSI C57.92	IEEE Guide for Loading Mineral Oil Immersed Power Transformers Up to and Including 100 MVA with 55 C or 65 C Average Winding Rise

1.2 SUBMITTALS

Government approval is required for submittals with a "G" designation; submittals not having a "G" designation are for information only. When used, a designation following the "G" designation identifies the office that will review the submittal for the Government. The following shall be submitted in accordance with Section 01330 SUBMITTAL PROCEDURES:

SD-02 Shop Drawings

Transformer Shop Drawings;

Complete outline and arrangement drawings of the transformer

showing plan and elevation views. Include overall dimensions, conduit or cable entrance locations and dimensions, and weights as required.

Wiring Diagrams

Electrical wiring and connection diagrams for all applicable accessories as required.

SD-03 Product Data

Nameplate

Nameplate drawing with connection schematic as required.

SD-10 Operations and Maintenance Data

Instruction Manuals

Instruction manuals describing the orderly assembly, installation, and connection of the transformer.

1.3 DEFINITIONS

Terms used in this section shall be in accordance with ANSI C57.12.70.

1.4 SYSTEM DESCRIPTION

Provide Liquid-immersed, unit-substation type transformers in accordance with these specifications.

Transformer shall be suitable for step-up or step-down operation, as indicated on Drawings.

1.5 INSTRUCTION MANUALS

Instruction manuals shall include as a minimum, information for the following equipment:

a. Details of the transformer.
b. Details of major and serviceable components.
c. Accessories.

Instructions shall describe receipt, handling, care, inspection, installation, operation, and maintenance of the transformer and accessories.

1.6 QUALITY ASSURANCE

Manufacturer shall have a thoroughly documented, written quality assurance and inspection program. Documentation shall be available to the Project Engineer upon request.

1.7 FACTORY TESTING

Tests shall be performed in accordance with all applicable standards.

The manufacturer shall perform all routine tests as described in ANSI C57.12.00, Table 16 plus the additional test listed below on every transformer supplied under these specifications.

a. Ratio Test.
b. Polarity and Phase Rotation Test.
c. No-Load Loss and Excitation Current Test.
d. Low Frequency Dielectric Tests which include:

(1) Applied Potential Test.
(2) Induced Potential Test.

e. Resistance Measurements Test.
f. Impedance Voltage and Load Loss Test.
g. Dissipation Factor Test(Capacitance Bridge Method).
h. Tank Weld seams are to be checked for holes using a dye penetrant prior to vacuum filling.
i. Mechanical Pressure Leak Test(minimum 51.7 kPa for 24 hours on tank and cooling panels).

The following design tests shall be performed only if test reports are not available on duplicate or essentially duplicate transformers.

a. Temperature Test.
b. Audible Sound Level Test.

Certified Test Reports shall be provided upon request.

1.8 MANUFACTURER QUALIFICATIONS

The manufacturer shall be regularly engaged in, and have a minimum of 10 years experience in the production of liquid filled distribution transformers in the type and size(s) specified herein.

PART 2 PRODUCTS

2.1 UNIT SUBSTATION TYPE TRANSFORMERS

Electrical Characteristics

a. KVA ratings as indicated on Drawings.
b. Three Phase.
c. Mineral Oil.
d. Temperature Rise 55/65 degree C Rise
e. Cooling: OISC/FA.
f. Frequency: 50 hertz.
g. The winding conductor shall be the manufacturers standard electrical grade conductor material: Aluminium.
h. 15000/8660 High-voltage and BIL: 95.
i. High voltage windings shall be as shown on Drawings.
j. Taps for De-energized Operation shall be 2-2.5% FCAN & 2-2.5% FCBN.
k. Impedance shall be 5.75% plus or minus ANSI standard tolerance of 7.5%.
l. 380Y Low-voltage and BIL: 30.
m. Low-voltage windings shall be as shown on Drawings.
n. Designed for step-up or step-down operation as indicated on Drawings.

2.2 MECHANICAL ARRANGEMENT

High voltage spade bushings shall be enclosed in a full length air chamber as required for application.

Low voltage spade bushings shall be enclosed in a full length air chamber as required for application.

2.3 MINIMUM ACCESSORIES

a. Dial type thermometer with two contacts.
b. Liquid level gauge.
c. Pressure-vacuum gauge.
d. 25 mm (1 inch) lower drain valve with sample valve.
e. Pressure relief valve.
f. Non-PCB label.
g. 25 mm (1 inch) upper fill plug.
h. 18 kV distribution class arresters.
i. 220 VAC single phase standard fan package.
j. Ground bus in HV and LV air terminal chambers.

2.4 ENCLOSURE CONSTRUCTION

The transformer base, tank, and cabinet shall be manufactured of cold rolled mild steel. Minimum cabinet material thickness shall be 1.95 mm (13 gauge).

Radiators, if required shall be 1.1 mm (18 gauge) mild steel. Radiators shall be of the flat panel, common header type.

2.5 CORROSION PROTECTION

The paint system shall consist of a rust inhibiting primer(0.038 mm minimum) applied over a shot-blasted surface with an acrylic enamel top coat (0.076 mm minimum). The final color shall be ASA 61 Grey.

2.6 TRANSFORMER SECTION

The following specifies the construction requirements for the design, manufacturing, and testing of outdoor, three-phase, liquid-filled, unit substation or substation type, distribution transformers.

a. The transformers shall be manufactured in strict accordance with applicable ANSI/IEEE and NEMA.
b. Transformers shall be supplied with a welded main tank cover and be of a sealed-tank construction designed to withstand a pressure of 10 psig without permanent distortion. The tank cover shall be domed to shed water and be supplied with a tamper-resistant access handhole sized to allow access to internal bushing and switching connections. The transformers shall remain effectively sealed for a top-oil temperature of -5 degrees C to +105 degrees C.
c. The transformer manufacturer shall certify that the transformer is Non-PCB containing no detectable PCB's. Do not provide non-flammable transformer liquids.
d. When high-voltage taps are specified above, full-capacity taps shall be provided with tap changing mechanism designed for de-energized operation. Then tapchanger operator handle shall be provided with means for padlocking.
e. The coil windings shall be of the two winding type, designed to reduce losses and manufactured with the conductor material as specified above. The windings shall incorporate a secondary sheet conductor to maximize short-circuit strength. All insulating materials shall be rated for 65 degrees C rise, 80 degrees C hot-spot operation.

f. The core assembly shall be a five legged, distributed gap, wound core, designed with a low flux density to minimize noise. The core material shall be high grade, grain oriented, non-aging silicon core steel with high magnetic permeability, low hysteresis and eddy current losses. Magnetic flux densities are to be kept well below saturation level to allow for minimum of 10 percent overvoltage excitation. The cores shall be properly annealed to reduce stresses induced during the manufacturing processes and reduce core losses.
g. The core frame shall be designed to provide maximum support of the core and coil assembly. The core frame shall be welded or bolted to ensure maximum short-circuit strength.
h. The core and coil assembly shall be designed and manufactured to meet the short-circuit requirements of ANSI C57.12.90. The core and coil assembly shall be baked in an oven prior to tanking to set the epoxy coating on the Kraft paper and remove moisture from the insulation prior to vacuum filling.
i. The transformer shall be vacuum filled with the appropriate fluid as indicated above. The process shall be of sufficient vacuum and duration to ensure that the core and coil assembly is free of moisture prior to filling the tank.
j. The transformer shall be thoroughly cleaned prior to painting with special attention given to removing chalk marks, weld slag, and any other contaminants. The tank and all metal parts shall be shot-blasted to white metal and immediately primed with an organic zinc primer. The finish coat shall consist of a minimum 2 mils of aliphatic polyurethane applied over a minimum of 3 mils of primer. The final color shall be as specified above.
k. Comply with ANSI C57.92 for loading mineral oil transformers.
l. Terminal markings and connections shall be in accordance with ANSI C57.12.80.

PART 3 EXECUTION

3.1 INSTALLATION

Electrical installations shall conform to IEEE, NFPA, or equivalent DIN, I.E.C., BS, or EN standards.

3.2 ACCEPTANCE

Acceptance of the transformers is contingent upon satisfactorily meeting these specifications and tests as specified herein.

-- End of Section --

SECTION 16370

ELECTRICAL DISTRIBUTION SYSTEM, AERIAL

PART 1 GENERAL

1.1 REFERENCES

The publications listed below form a part of this specification to the extent referenced. The publications are referred to within the text by the basic designation only.

AMERICAN NATIONAL STANDARDS INSTITUTE (ANSI)

ANSI C135.1	(1979) Galvanized Steel Bolts and Nuts for Overhead Line Construction
ANSI C135.14	(1979) Staples with Rolled or Slash Points for Overhead Line Construction
ANSI C135.2	(1999) Threaded Zinc-Coated Ferrous Strand-Eye Anchor Rods and Nuts for Overhead Line Construction
ANSI C135.22	(1988) Galvanized Ferrous Pole-Top Insulator Pins with Lead Threads for Overhead Line Construction
ANSI C135.4	(1987) Zinc-Coated Ferrous Eyebolts and Nuts for Overhead Line Construction
ANSI C29.1	(1988; R 2002) Test Methods for Electrical Power Insulators
ANSI C29.2	(1992; R 1999) Insulators - Wet-Process Porcelain and Toughened Glass - Suspension Type
ANSI C29.5	(1984; R 2002) Wet-Process Porcelain Insulators - Low- and Medium-Voltage Types
ANSI C29.6	(1996; R 2002) Wet-Process Porcelain Insulators - High-Voltage Pin Type
ANSI C29.8	(1985; R 2002) Apparatus, Cap and Pin Type Wet-Process Porcelain Insulators -
ANSI C29.9	(1983; R 2002) Wet-Process Porcelain Insulators - Apparatus, Post-Type
ANSI C37.32	(2002) High-Voltage Switches, Bus Supports, and Accessories - Schedules of Preferred Ratings, Construction Guidelines and Specifications
ANSI C57.12.20	(1997) Overhead Type Distribution

	Transformers, 500 KVA and Smaller: High Voltage 34 500 Volts and Below: Low Voltage, 7970/13 800 Y Volts and Below
ANSI C62.2	(1987; R 1994) Guide for the Application of Gapped Silicon-Carbide Surge Arresters for Alternating Current Syste

AMERICAN SOCIETY OF CIVIL ENGINEERS (ASCE)

ASCE 72	(1990) Design of Steel transmission Pole structural.

AMERICAN WATER WORKS ASSOCIATION(AWWA)

AWPA C25	(2001) Sawn Crossarms - Preservative Treatment by Pressure Processes

ASTM INTERNATIONAL (ASTM)

ASTM A 123/A 123M	(2001) Zinc (Hot-Dip Galvanized) Coatings on Iron and Steel Products
ASTM A 153/A 153M	(2001) Zinc Coating (Hot-Dip) on Iron and Steel Hardware
ASTM A 575	(1996; R 2002) Steel Bars, Carbon, Merchant Quality, M-Grades
ASTM A 576	(1990b; R 2000) Steel Bars, Carbon, Hot-Wrought, Special Quality
ASTM B 1	(1995) Hard-Drawn Copper Wire
ASTM B 228	(2002) Concentric-Lay-Stranded Copper-Clad Steel Conductors
ASTM B 230/B 230M	(1999) Aluminum 1350-H19 Wire for Electrical Purposes
ASTM B 231/B 231M	(1999) Concentric-Lay-Stranded Aluminum 1350 Conductors
ASTM B 416	(1998; R 2002) Concentric-Lay-Stranded Aluminum-Clad Steel Conductors
ASTM B 8	(1999) Concentric-Lay-Stranded Copper Conductors, Hard, Medium-Hard, or Soft
ASTM D 1654	(1992; R 2000) Evaluation of Painted or Coated Specimens Subjected to Corrosive Environments
ASTM D 4059	(2000) Analysis of Polychlorinated Biphenyls in Insulating Liquids by Gas Chromatography
ASTM D 923	(1997) Sampling Electrical Insulating Liquids

BRITISH STANDARDS INSTITUTION (BSI)

BS 215	(1970) Specification for aluminum conductors, steel-reinforced for overhead power transmission.
BS 7430	(1998) Code of Practice for Earthing
BS 6651	(1999) Code Of Practice For Protection Of Structures Against Lightning

DUETSCHES INSTITUTE FUR NORMUNG (DIN)

DIN 48201	(1981) Stranded Conductors.
DIN 48204	(1984) Aluminum Conductors, steel reinforced.

INTERNATIONAL ELECTROTECHNICAL COMMISSION (IEC)

IEC 60076	(1993) Power tranformers
IEC 60726	(1982)Dry type power transformers
IEC 282-1	(1994) High voltage fuses-current Limiting fuses.
IEC 60120	(1984) Dimentions of ball and socket couplings of string insulator units.
IEC 61466	(1997) Composite string insulator units for overhead lines with voltage greater than 1000V.
IEC 61230	(1993) Liveworking-Portable equipment for earthing or earth short circuiting.

INSTITUTE OF ELECTRICAL AND ELECTRONICS ENGINEERS (IEEE)

IEEE C2	(2002) National Electrical Safety Code
IEEE C37.34	(1994) Test Code for High-Voltage Air Switches
IEEE C37.41	(2000) Design Tests for High-Voltage Fuses, Distribution Enclosed Single-Pole Air Switches, Fuse Disconnecting Switches, and Accessories
IEEE C37.63	(1997) Requirements for Overhead, Pad-Mounted, Dry-Vault, and Submersible Automatic Line Sectionalizers for AC Systems
IEEE C57.12.00	(2000) General Requirements for Liquid-Immersed Distribution, Power, and Regulating Transformers

IEEE C57.13.2	(1991) Standard Conformance Test Procedures for Instrument Transformers
IEEE C57.19.00	(1991; R 1997) Standard General Requirements and Test Procedures for Outdoor Power Apparatus Bushings
IEEE C57.19.01	(2000) Performance Characteristics and Dimensions for Outdoor Apparatus Bushings
IEEE C57.98	(1994) Guide for Transformer Impulse Tests
IEEE C62.1	(1989; R 1994) Gapped Silicon-CarbideSurge Arresters for AC Power Circuits
IEEE C62.11	(1999) Metal-Oxide Surge Arresters for Alternating Current Power Circuits
IEEE Std 100	(1997) IEEE Standard Dictionary of Electrical and Electronics Terms
IEEE Std 242	(2001) Recommended Practice for Protection and Coordination of Industrial and Commercial Power Systems - Buff Book
IEEE Std 399	(1997) Recommended Practice for Power Systems Analysis - Brown Book
IEEE Std 81	(1983) Guide for Measuring Earth Resistivity, Ground Impedance, and Earth Surface Potentials of a Ground System (Part 1)Normal Measurements

NATIONAL ELECTRICAL MANUFACTURERS ASSOCIATION (NEMA)

NEMA HV 2	(1991; R 1996; R 2002) Application Guide for Ceramic Suspension Insulators
NEMA LA 1	(1992; R 1999) Surge Arresters
NEMA SG 2	(1993) High Voltage Fuses
NEMA WC 74	(2000) 5-46 kV Shielded Power Cable for Use in the Transmission and Distribution of Electric Energy

NATIONAL FIRE PROTECTION ASSOCIATION (NFPA)

NFPA 70	(2005) National Electrical Code

U.S. DEPARTMENT OF AGRICULTURE (USDA)

RUS Bull 1728H-701	(1993) Wood Crossarms (Solid and Laminated), Transmission Timbers and Pole Keys

UNDERWRITERS LABORATORIES (UL)

UL 467	(1993; R 2001) Grounding and Bonding

	Equipment
UL 486A	(1997; Rev Jun 1997) Wire Connectors for Use with Aluminum Conductors
UL 486B	(1997; Rev thru May 2001) Wire Connectors for Use with Aluminum Conductors

1.2 GENERAL REQUIREMENTS

1.2.1 Terminology

Terminology used in this specification is as defined in IEEE Std 100.

1.2.2 Service Conditions

Items provided under this section shall be specifically suitable for the following service conditions. Seismic details shall conform to Sections 13080 SEISMIC PROTECTION FOR MISCELLANEOUS EQUIPMENT, 15070 SEISMIC PROTECTION FOR MECHANICAL EQUIPMENT, and 16070 SEISMIC PROTECTION FOR ELECTRICAL EQUIPMENT.

a. Fungus Control None.

b. Altitude 977 m.

c. Ambient Temperature -6 degrees C to +40 degrees C.

d. Frequency 50 Hz.

e. Seismic Parameters Zone 4.

f. Corrosive Areas None.

g. Wind Load 66 knots (122 kph)

H. Snow Load 75 kg/sq. meter

1.3 SUBMITTALS

Government approval is required for submittals with a "G" designation; submittals not having a "G" designation are for information only. When used, a designation following the "G" designation identifies the office that will review the submittal for the Government. The following shall be submitted in accordance with Section 01330 SUBMITTAL PROCEDURES:

SD-02 Shop Drawings

Electrical Distribution System

Detail drawings consisting of equipment drawings, illustrations, schedules,instructions,diagrams and other information necessary to define the installation and enable the Government to check conformity with the requirements of the contract drawings. Detail drawings shall as a minimum include:

a. Poles.

b. Calculations for steel poles and power installed screw

foundations.

c. Crossarms.

d. Transformers.

e. Automatic circuit reclosers.

f. Pole top switches.

g. Conductors.

h. Insulators.

i. Surge arresters.

If departures from the contract drawings are deemed necessary by the Contractor, complete details of such departures shall be submitted with the detail drawings. Approved departures shall be made at no additional cost to the Government.

Detail drawings shall show how components are assembled, function together and how they will be installed on the project. Data and drawings for component parts of an item or system shall be coordinated and submitted as a unit. Data and drawings shall be coordinated and included in a single submission. Multiple submissions for the same equipment or system are not acceptable except where prior approval has been obtained from the Contracting Officer. In such cases, a list of data to be submitted later shall be included with the first submission. Detail drawings shall consist of the following:

a. Detail drawings showing physical arrangement, construction details, connections, finishes, materials used in fabrication, provisions for conduit or busway entrance, access requirements for installation and maintenance, physical size, electrical characteristics, foundation and support details, and equipment weight. Drawings shall be drawn to scale and/or dimensioned. Optional items shall be clearly identified as included or excluded.

b. Internal wiring diagrams of equipment showing wiring as actually provided for this project. External wiring connections shall be clearly identified.

SD-03 Product Data

Fault Current Analysis

Protective Device

Coordination Study

The study shall be submitted along with protective device equipment submittals. No time extensions or similar contract modifications will be granted for work arising out of the requirements for this study. Approval of protective devices proposed shall be based on recommendations of this study. The Government shall not be held responsible for any changes to equipment, device settings, ratings, or additional labor for

installation of equipment or devices ordered and/or procured prior to approval of the study.

Nameplates

Catalog cuts, brochures, circulars, specifications, product data, and printed information in sufficient detail and scope to verify compliance with the requirements of the contract documents.

Material and Equipment

A complete itemized listing of equipment and materials proposed for incorporation into the work. Each entry shall include the item number, the quantity of items proposed, and the name of the manufacturer of the item.

General Installation Requirements

As a minimum, installation procedures for transformers and reclosers. Procedures shall include diagrams, instructions, and precautions required to install, adjust, calibrate, and test the devices and equipment.

SD-07 Certificates

Material and Equipment

Where materials or equipment are specified to conform to the standards of the Underwriters Laboratories (UL) or to be constructed or tested, or both, in accordance with the standards of the American National Standards Institute (ANSI), the Institute of Electrical and Electronics Engineers (IEEE), or the National Electrical Manufacturers Association (NEMA), the Contractor shall submit proof that the items provided under this section of the specifications conform to such requirements. The label of, or listing by, UL will be acceptable as evidence that the items conform thereto. Either a certification or a published catalog specification data statement, to the effect that the item is in accordance with the referenced ANSI or IEEE standard, will be acceptable as evidence that the item conforms thereto. A similar certification or published catalog specification data statement to the effect that the item is in accordance with the referenced NEMA standard, by a company listed as a member company of NEMA, will be acceptable as evidence that the item conforms thereto. In lieu of such certification or published data, the Contractor may submit a certificate from a recognized testing agency equipped and competent to perform such services, stating that the items have been tested and that they conform to the requirements listed, including methods of testing of the specified agencies.

1.4 SUBMITTALS

The following shall be submitted in accordance with Section 01335 SUBMITTAL PROCEDURES for design built project:

SD-02 Shop Drawings

As-Built Drawings; G,

The as-built drawings shall be a record of the construction as installed. The drawings shall include the information shown on the contract drawings as well as deviations, modifications, and changes from the contract drawings, however minor. The as-built drawings shall be kept at the job site and updated daily. The as-built drawings shall be a full sized set of prints marked to reflect deviations, modifications, and changes. The as-built drawings shall be complete and show the location, dimensions, part identification, and other information. Additional sheets may be added. The as-built drawings shall be jointly inspected for accuracy and completeness by the Contractor's quality control representative and by the Contracting Officer prior to the submission of each monthly pay estimate. Upon completion of the work, the Contractor shall submit three full sized sets of the marked prints to the Contracting Officer for approval. If upon review, the as-built drawings are found to contain errors and/or omissions, they will be returned to the Contractor for correction. The Contractor shall correct and return the as-built drawings to the Contracting Officer for approval within ten calendar days from the time the drawings are returned to the Contractor.

SD-06 Test Reports

Factory Tests

Certified factory test reports shall be submitted when the manufacturer performs routine factory tests, including tests required by standards listed in paragraph REFERENCES. Results of factory tests performed shall be certified by the manufacturer, or an approved testing laboratory, and submitted within 7 days following successful completion of the tests specified in applicable publications or in these specifications.

Field Testing

A proposed field test plan 30 days prior to testing the installed system. No field test shall be performed until the test plan is approved. The test plan shall consist of complete field test procedures including tests to be performed, test equipment required, and tolerance limits.

Operating Tests; G

Six copies of the information described below in 215.9 by 279.4 mm (8-1/2 by 11 inch) binders, and including a separate section for each test. Sections shall be separated by heavy plastic dividers with tabs.

a. A list of equipment used, with calibration certifications.

b. A copy of measurements taken.

c. The dates of testing.

d. The equipment and values to be verified.

e. The condition specified for the test.

f. The test results, signed and dated.

g. A description of adjustments made.

SD-10 Operation and Maintenance Data

Electrical Distribution System

Copies of Operation and Maintenance manuals electrical distribution system shall be provided as outlined in section 01060 SPECIAL CLAUSES.

1.5 DELIVERY, STORAGE, AND HANDLING

Devices and equipment shall be visually inspected by the Contractor when received and prior to acceptance from conveyance. Stored items shall be protected from the environment in accordance with the manufacturer's published instructions. Damaged items shall be replaced. Oil filled transformers and switches shall be stored in accordance with the manufacturer's requirements. Metal poles shall be handled and stored in accordance with the manufacturer's instructions

1.6 EXTRA MATERIALS

One additional spare fuse or fuse element for each furnished fuse or fuse element shall be delivered to the Contracting Officer when the electrical system is accepted, except as specified below. Two complete sets of all special tools required for maintenance shall be provided, complete with a suitable tool box. Special tools are those that only the manufacturer provides, for special purposes (to access compartments, or operate, adjust, or maintain special parts).

Provide 10% of installed amount of the following: lightning arrestors, movable type fuses. Provide not less than 15 each wire connectors.

PART 2 PRODUCTS

2.1 GENERAL REQUIREMENTS

Products shall conform to the following requirements. Items of the same classification shall be identical including equipment, assemblies, parts, and components.

2.2 STANDARD PRODUCT

Material and equipment shall be the standard product of a manufacturer regularly engaged in the manufacture of the product and shall essentially duplicate items that have been in satisfactory use for at least 2 years prior to installation.

2.3 NAMEPLATES

2.3.1 General

Each major component shall have the manufacturer's name, address, type or style, model or serial number, and catalog number on a nameplate securely attached to the equipment. Equipment containing liquid-dielectrics shall have the type of dielectric on the nameplate. Nameplates shall be made of noncorrosive metal. As a minimum, nameplates shall be provided for

transformers, regulators, circuit breakers, capacitors, meters and switches.

2.3.2 Liquid-Filled Transformer Nameplates

Power transformers shall be provided in accordance with IEEE C57.12.00 or IEC 60076 and IEC 60726. Nameplates shall indicate the number of liters and composition of liquid-dielectric, and shall be permanently marked with a statement that the transformer dielectric to be supplied is non-polychlorinated biphenyl. If transformer nameplate is not so marked, the Contractor shall furnish manufacturer's certification for each transformer that the dielectric in non-PCB classified, with less than 50 ppm PCb content in accordance with paragraph LIQUID DIELECTRICS. Certifications shall be related to serial numbers on transformer nameplates. Transformer dielectric exceeding the 50 ppm PCB content or transformers without certification will be considered as PCB insulated and will not be accepted.

2.4 CORROSION PROTECTION

2.4.1 Ferrous Metal Materials

2.4.1.1 Hardware

Ferrous metal hardware shall be hot-dip galvanized in accordance with ASTM A 153/A 153M and ASTM A 123/A 123M.

2.4.1.2 Equipment

Equipment and component items, including but not limited to transformers and ferrous metal luminaires not hot-dip galvanized or porcelain enamel finished, shall be provided with corrosion-resistant finishes which shall withstand 120 hours of exposure to the salt spray test specified in ASTM B 1 17 without loss of paint or release of adhesion of the paint primer coat to the metal surface in excess of 1.6 mm (1/16 inch) from the test mark. The described test mark and test evaluation shall be in accordance with ASTM D 1654 with a rating of not less than 7 in accordance with TABLE 1, (procedure A). Cut edges or otherwise damaged surfaces of hot-dip galvanized sheet steel or mill galvanized sheet steel shall be coated with a zinc rich paint conforming to the manufacturer's standard.

2.4.2 Finishing

Painting required for surfaces not otherwise specified and finish painting of items only primed at the factory shall be as specified in Section 09900 PAINTS AND COATINGS.

2.5 CONDUCTORS, CONNECTORS, AND SPLICES

2.5.1 Aluminum-Composition Conductors

All-aluminum-conductors, AAC, shall be alloy 1350-H19 and comply with ASTM B 230/B 230M ASTM B 231/B 231M, DIN 48201, and BS 215. Aluminum-conductor-steel-reinforced, ACSR, shall comply with ASTM B 232/B 232M, DIN 48204, and BS 215..

2.5.2 Copper Conductors

Hard-drawn-copper conductors shall comply with ASTM B 1 and ASTM B 8 or DIN 48201 as appropriate for the conductor size.

2.5.3 Connectors and Splices

Connectors and splices shall be of copper alloys for copper conductors, aluminum alloys for aluminum-composition conductors, and a type designed to minimize galvanic corrosion for copper to aluminum-composition conductors. Aluminum-composition and aluminum-composition to copper shall comply with UL 486B, and copper-to-copper shall comply with UL 486A.

2.6 MEDIUM-VOLTAGE LINES

2.6.1 Bare Medium-Voltage Lines

Bare medium-voltage line conductors shall be aluminum-conductor-steel-reinforced, ACSR. Conductor types shall conform to DIN 48204 and shall not be mixed on any project, unless specifically indicated. Conductors larger than No. 2 AWG shall be stranded.

2.7 LOW-VOLTAGE LINES

Low-voltage line conductors shall be of Hard drawn Bare copper conductors except for service drop cables shall be of the neutral-supported secondary and service drop type with cross-linked thermosetting polyethylene (XLP) insulation in accordance with IEC 60228. Neutral-supported secondary and service drop conductors shall be insulated copper with bare hard-drawn-copper or copper-clad steel neutrals.

2.8 POLES AND HARDWARE

Poles shall be of lengths and classes and strengths indicated.

2.8.1 Steel Poles

Steel poles shall be designed to withstand the loads specified in IEEE C2 multiplied by the appropriate overload capacity factors or designed per ASCE 72, shall be hot-dip galvanized in accordance with ASTM A 123/A 123M and shall not be painted. Poles shall have tapered tubular members, either round in cross-section or polygonal, and comply with strength calculations performed by a registered professional engineer. Calculations shall be submitted in accordance with the detail drawings portion of paragraph SUBMITTALS. Pole shafts shall be one piece. Poles shall be welded construction with no bolts, rivets, or other means of fastening except as specifically approved. Pole markings shall be approximately 900 to 1800 mm above grade and shall include manufacturer, year of manufacture, top and bottom diameters, length, and a loading tree. Attachment requirements shall be provided as indicated, including grounding provisions. Climbing facilities are not required.

2.8.2 Pole Line Hardware

Zinc-coated hardware shall comply with ANSI C135.1, ANSI C135.2, ANSI C135.4, ANSI C135.14 ANSI C135.22. Steel hardware shall comply with ASTM A 575 and ASTM A 576. Hardware shall be hot-dip galvanized in accordance with ASTM A 153/A 153M. Pole-line hardware shall be hot-dip galvanized . Washers shall be installed as required. Washers used on through-bolts and double-arming bolts shall be approximately 57.2 mm square and 4.8 mm (3/16 inch) thick. The diameter of holes in washers shall be the correct standard size for the bolt on which a washer is used. Washers for use under heads of carriage-bolts shall be of the proper size to fit over

square shanks of bolts. Eye bolts, bolt eyes, eyenuts, strain-load plates, lag screws, guy clamps, fasteners, hooks, shims, and clevises shall be used wherever required to support and to protect poles, brackets, crossarms, guy wires, and insulators.

2.8.3 Armless Construction

Pole mounting brackets for line-post or pin insulators and eye bolts for suspension insulators shall be as shown. Brackets shall be attached to poles with a minimum of two bolts. Brackets may be either provided integrally as part of an insulator or attached to an insulator with a suitable stud. Bracket mounting surface shall be suitable for the shape of the pole. Pole top brackets shall conform to ANSI C135.22, except for modifications necessary to provide support for a line-post insulator. Brackets shall provide a strength exceeding that of the required insulator strength, but in no case less than a 12.5 kN (2800 pound) cantilever strength.

2.8.4 Guy Assemblies

Guy assemblies shall be aluminum-clad steel in accordance with ASTM B 416 or copper-clad steel in accordance with ASTM B 228. Guy assemblies, including insulators and attachments, shall provide a strength exceeding the required guy strength. Three-eye thimbles shall be provided on anchor rods to permit attachment of individual primary, secondary, and communication down guys. Anchors shall provide adequate strength to support all loads. Guy strand shall be 7 strand. Guy material shall be Class A zinc-coated-steel utilities grade 6mm (1/4 inch), with a minimum breaking strength of not less than 29.80 Kn, except where two or more guys are used 2.1 m (7 feet) 2.4 m (8 feet) in length by 19.1 mm (3/4 inch) in diameter.

2.9 INSULATORS

Insulators shall comply with NEMA HV 2, BS, or DIN for general requirements. Suspension insulators shall be used at corners, angles, dead-ends, other areas where line insulators do not provide adequate strength, and as indicated. Mechanical strength of suspension insulators and hardware shall exceed the rated breaking strength of the attached conductors.

2.9.1 Medium-Voltage Line Insulators

Medium-voltage line insulators shall comply with ANSI C29.2, ANSI C29.5, and ANSI C29.6 or IEC 61466, IEC 60120, and as applicable. Ratings shall not be lower than the ANSI classes indicated in TABLE I. Horizontal line-post insulators shall be used for armless construction and shall have the same mechanical and electrical ratings as vertical line-post insulators for the ANSI class indicated, but shall be modified to be suitable for horizontal installation. Where line-post insulators are used for angles greater than 15 degrees, clamp-top fittings shall be provided as well as for other locations shown. Conductor clamps for use with clamp-top, line-post insulators shall be hot-dip galvanized malleable iron for copper conductors and aluminum alloy for aluminum-composition conductors. Either line-post or pin insulators may be used for crossarm construction. Pin insulators for use on voltages in excess of 6 kV phase-to-phase shall be radio-interference-freed or else line-post insulators shall be used.

TABLE I

MINIMUM ANSI RATING OF MEDIUM-VOLTAGE INSULATORS BY CLASS

Voltage Level	Line-Post	Pin	Suspension
6 kV to 15 kV	57-1 or 11 57-2 or 12	55-5 56-3	Two 52-2 Two 52-3 or 4

2.9.2 Apparatus Insulators

Apparatus insulators shall comply with IEEE C57.19.00, IEEE C57.19.01, ANSI C29.8, and ANSI C29.9 or IEC 60120 and IEC 61466 as applicable.

2.10 CROSSARM ASSEMBLIES

2.10.1 Crossarms

Crossarms shall comply with RUS Bull 1728H-701 and shall be steel distribution type, except cross-sectional area with pressure treatment conforming to AWPA C25, and a 6.4 mm (1/4 inch), 45 degree chamfer on all top edges. Cross-sectional area minimum dimensions shall be 108.0 mm (4-1/4 inches) in height by 82.6 mm (3-1/4 inches) in depth in accordance with IEEE C2 for Grade B construction. Crossarms shall be 2.4 m (8 feet) in length, except that 3.1 m (10 foot) crossarms shall be used for crossarm-mounted banked single-phase or three-phase transformers or elsewhere as indicated. Crossarms shall be machined, chamfered, trimmed, and bored for stud and bolt holes before pressure treatment. Factory drilling shall be provided for pole and brace mounting, for four pin or four vertical line-post insulators, and for four suspension insulators, except where otherwise indicated or required. Drilling shall provide required climbing space and wire clearances. Crossarms shall be straight and free of twists to within 2.5 mm per 304.8 mm (1/10 inch per foot) of length. Bend or twist shall be in one direction only.

2.11 FUSES AND SWITCHES, MEDIUM-VOLTAGE

2.11.1 Fuse Cutouts

Medium-voltage fuses and cutouts shall comply with NEMA SG 2 or IEC 282-1 and shall be of the loadbreak type construction rated 15 kV and of the heavy-duty type. Open-link cut-outs are not acceptable. Fuses shall be either indicating or dropout type. Fuse ratings shall be as indicated. Fuse cutouts shall be equipped with mounting brackets suitable for the indicated installations.

2.11.2 Fused Switches

Fused switches shall be single-pole, manual devices with integral power fuses of the dropout type. Fuse ratings shall be as indicated. Each switch shall have a continuous current rating of 400 amperes rms , a momentary asymmetrical current rating of 40 kA rms and shall be rated for the voltage of the system in which it is installed.

2.11.3 Nonfused Switches

Nonfused switches shall be single-pole, manual devices with a continuous current rating of 400 amperes rms , a momentary asymmetrical current rating of 40 kA rms , and shall be rated for the voltage of the system in which it is installed.

2.11.4 Group-Operated Load Interrupter Switches

2.11.4.1 Manually Operated Type (Switch Handle Operated)

Manually operated (switch handle operated) load interrupter switches shall comply with ANSI C37.32 and shall be of the outdoor, manually-operated, three-pole, single-throw type with either tilting or rotating insulators. Switches shall be equipped with interrupters capable of interrupting currents equal to the switch's continuous current rating. Each switch shall be preassembled for the indicated configuration and mounting. Moving contacts shall be of the high-pressure, limited-area type, designed to ensure continuous surface contact. Switches shall be fused or non-fused as indicated. Switches shall be complete with necessary operating mechanisms, handles, and other items required for manual operation from the ground. Switch operating handles shall be located approximately 1.1 meters above final grade. Insulation of switch operating mechanisms shall include both insulated interphase rod sections and insulated vertical shafts. Each handle shall be provided with a padlock arranged to lock the switch in both the open and the closed position.

2.11.5 Group Operated Load Interrupter Switches

2.11.5.1 Pole-Mounted Sectionalizing Switches

Pole-mounted sectionalizing switches shall comply with IEEE C37.63. Sectionalizers shall be coordinated with source side recloser as shown. Ratings at 50 Hz shall be:

Nominal voltage ..... 15 kV
Rated Maximum voltage..... 15 kV
Rated continuous current..... 1200 AMP
Three second short-time current-carrying capacity.... 40 kA
BIL..... 95 kV

2.12 TRANSFORMERS

Transformers shall comply with IEEE C57.12.00 or IEC 60076, IEC 60726 for general requirments and ANSI C57.12.20 for specific requirements for overhead transformers. Overhead distribution transformers shall be of the outdoor type,mineral-oil-insulated, single-phase or three-phase as indicated and have two separate windings per phase. Transformers shall be provided with necessary auxiliary mounting devices suitable for the indicated installation. Transformers shall have two 2-1/2 percent rated KVA high-voltage taps above and below rated primary voltage. Transformer installations shall include one primary fuse cutout and one surge arrester for each ungrounded phase conductor. Self-protected transformers are not acceptable. Transformer tanks shall have a standard gray finish.

2.13 SURGE ARRESTERS

Surge arresters shall comply with NEMA LA 1 and IEEE C62.1, ANSI C62.2, and IEEE C62.11, and shall be provided for protection of aerial-to-underground

transitions, automatic circuit reclosers, group-operated load-interrupter switches, transformers and other indicated equipment. Arresters shall be distribution class, 9 Kv rated. Arresters shall be equipped with mounting brackets suitable for the indicated installations. Arresters shall be of the metal-oxide varistor type suitable for outdoor installations.

2.14 GROUNDING AND BONDING

2.14.1 Driven Ground Rods

Ground rods shall be of copper-clad steel conforming to UL 467, BS 7430, BS 6651 or IEC 61230 not less than 20 mm (3/4 inch) in diameter by 3.0 meter (10 feet) in length of the sectional type driven full length into the earth.

2.14.2 Grounding Conductors

Grounding conductors shall be bare, except where installed in conduit with associated phase conductors. Insulated conductors shall be of the same material as the phase conductors and green color-coded, except that conductors shall be rated no more than 600 volts. Bare conductors shall be ASTM B 8 soft-drawn unless otherwise indicated. Aluminum is not acceptable.

2.15 PADLOCKS

Padlocks shall comply with Section 08710 DOOR HARDWARE.

2.16 WARNING SIGNS

Warning signs shall be porcelain enameled steel or approved equal. Voltage warning signs shall comply with IEEE C2.

2.17 LIQUID DIELECTRICS

Liquid dielectrics for transformers, reclosers, and other liquid-filled electrical equipment shall be non-polychlorinated biphenyl (PCB) mineral-oil or less-flammable liquid as specified. Nonflammable fluids shall not be used. Tetrachloroethylene (perchloroethylene) and 1, 2, 4 tetrachlorobenzene fluids shall not be used. Liquid dielectrics in retrofitted equipment shall be certified by the manufacturer as having less than 50 parts-per-million (ppm) PCB content. In lieu of the manufacturer's certification, the Contractor may submit a test sample of the dielectric in accordance with ASTM D 923 and have tests performed per ASTM D 4059 at a testing facility approved by the Contracting Officer. Equipment with test results indicating PCB level exceeding 50 ppm shall be replaced.

2.18 FACTORY TESTS

Factory tests shall be performed, as follows, in accordance with the applicable publications and with other requirements of these specifications. The Contracting Officer shall be notified at least 10 days before the equipment is ready for testing.

a. Transformers: Manufacturer's standard routine tests in accordance with IEEE C57.12.00.

b. Transformers rated 200 kVA and above: Reduced full-wave, chopped-wave, and full-wave impulse test on each line and neutral terminal, in accordance with IEEE C57.98.

c. High-Voltage Air Switches: Manufacturer's standard tests in accordance with IEEE C37.34 and IEEE C37.41.

d. Instrument Current Transformers: Manufacturer's standard tests in accordance with IEEE C57.13.2.

e. High-Voltage Fuses: Manufacturer's standard tests in accordance with IEEE C37.41.

f. Electric Power Insulators: Manufacturer's standard tests in accordance with ANSI C29.1.

2.19 COORDINATED POWER SYSTEM PROTECTION

Analyses shall be prepared to demonstrate that the equipment selected and system constructed meet the contract requirements for equipment ratings, coordination, and protection. They shall include a load flow analysis, a fault current analysis, and a protective device coordination study. The studies shall be performed by a registered professional engineer with demonstrated experience in power system coordination in the last three years. The Contractor shall provide list of references complete with points of contact, address and telephone numbers. The selection of the engineer is subject to the approval of the Contracting Office

2.19.1 Scope of Analyses

The fault current analysis, and protective device coordination study shall begin at: the source bus and extend down to system buses where fault availability is 10,000 amperes (symmetrical) for building/facility 600 volt level distribution buses.

2.19.2 Determination of Facts

The time-current characteristics, features, and nameplate data for each existing protective deice shall be determined and documented. The Contractor shall coordinate with the power company for fault current availability at the site.

2.19.3 Single Line Diagram

A single line diagram shall be prepared to show the electrical system buses, devices, transformer points, and all sources of fault current (including generator and motor contributions). A fault-impedance diagram or a computer analysis diagram may be provided. Each bus, device or transformer point shall have a unique identifier. If a fault-impedance diagram is provided, impedance data shall be shown. Locations of switches, breakers, and circuit interrupting devices shall be shown on the diagram together with available fault data, and the device interrupting rating.

2.19.4 Fault Current Analysis

The fault current analysis shall be performed in accordance with methods described in IEEE Std 242 and IEEE Std 399. Actual data shall be utilized in fault calculations. Bus characteristics and transformer impedances shall be those proposed. Data shall be documented in the report.

2.19.5 Fault Current Availability

Balanced three-phased fault, bolted line-to-line fault, and line-to-ground fault current values shall be provided at each voltage transformation point and at each power distribution bus. The maximum and minimum values of fault available at each location shall be shown in tabular form on the diagram or in the report.

2.19.6 Coordination Study

The study shall demonstrate that the maximum possible degree of selectively has been obtained between devices specified, consistent with protection of equipment and conductors from damage from overloads and fault conditions. The study shall include a description of the coordination of the protective devices in this project. Provide a written narrative that describes: which devices may operate in the event of a fault at each bus; the logic used to arrive at device ratings and settings; situations where system coordination is not achievable due to device limitations (an analysis of any device curves which overlap); coordination between upstream and downstream devices; and relay settings. Recommendations to improve or enhance system reliability, and detail where such changes would involve additions or modifications to the contract and cost changes (addition or reduction) shall be provided. Composite coordination plots shall be provided on log-log graph pape

2.19.7 Study Report

a. The report shall include a narrative describing: the analyses performed; the bases and methods used; and the desired method of coordinated protection of the power system.

b. The study shall include descriptive and technical data for existing devices and new protective devices proposed. The data shall include manufacturers published data, nameplate data, and definition of the fixed or adjustable features of the existing or new protective devices.

c. The report shall document utility company data including system voltages, fault MVA, system X/R ratio, time-current characteristics curves, current transformer ratios, and relay device numbers and settings.

d. The report shall contain fully coordinated composite time-current characteristic curves for each bus in the system, as required to ensure coordinated power system between protective devices or equipment. The report shall include recommended ratings and settings of all protective devices in tabulated form.

e. The report shall provide the calculation performed for the analyses, including computer analysis programs utilized. The name of the software package, developer, and version number shall be provided.

PART 3 EXECUTION

3.1 GENERAL INSTALLATION REQUIREMENTS

Equipment and devices shall be installed and energized in accordance with

the manufacturer's published instructions. Circuits installed in conduits or underground and splices and terminations for medium-voltage cable shall conform to the requirements of Section 16375 ELECTRICAL DISTRIBUTION SYSTEM, UNDERGROUND. Secondary circuits installed in conduit on poles shall conform to the requirements of Section 16415 ELECTRICAL WORK, INTERIOR.

3.1.1 Conformance to Codes

The installation shall comply with the requirements and recommendations of IEEE C2 for heavy loading districts, Grade B construction. No reduction in clearance shall be made. The installation shall also comply with the applicable parts of NFPA 70.

3.1.2 Verification of Dimensions

The Contractor shall become familiar with details of the work, shall verify dimensions in the field, and shall notify the Contracting Officer of any discrepancy before performing any work..

3.1.3 Tree Trimming

Where lines pass through trees, trees shall be trimmed at least 4.5 m clear on both sides horizontally and below for medium-voltage lines, and 1.5 m clear on both sides horizontally and below for other lines, and no branch shall overhang horizontal clearances. Where trees are indicated to be removed to provide a clear right-of-way, clearing is specified in Section 02231 CLEARING AND GRUBBING.

3.1.4 Disposal of Liquid Dielectrics

PCB-contaminated dielectric shall be marked as PCB and transported to and incinerated by an approved EPA waste disposal facility. The Contractor shall furnish certification of proper disposal. Contaminated dielectric shall not be diluted to lower the level of contamination.

3.2 POLE INSTALLATION

Joint-use electric/roadway-lighting poles for overhead electric and communication lines shall be steel poles utilizing crossarm construction. Cross-arm mounted banked single-phase transformer installations shall be provided. Crossarm construction shall be provided for support of other equipment, except where direct-pole mounting is indicated. Pole equipment mounts shall be used for steel poles rather than crossarm equipment mounts. Detail drawings shall be submitted for approval. Provision for communication services is required on pole-line construction, except where specifically noted otherwise. A vertical pole space of not less than 600 mm (2 feet) shall be reserved at indicated locations.

3.2.1 Steel Pole Setting

Poles shall be mounted on cast-in-place or power-installed screw foundations.

3.2.1.1 Cast-In-Place Foundations

Concrete foundations, sized as indicated, shall have anchor bolts accurately set in foundations using templates supplied by the pole manufacturer. Concrete work and grouting is specified in Section 03300 CAST-IN-PLACE STRUCTURAL CONCRETE. After the concrete has cured, pole

anchor bases shall be set on foundations and leveled by shimming between anchor bases and foundations or by setting anchor bases on leveling nuts and grouting. Poles shall be set plumb. Anchor bolts shall be the manufacturer's standard, and not less than necessary to meet the pole wind loading specified herein and other design requirements.

3.2.1.2 Power-Installed Screw Foundations

Power-installed screw foundations may be used if they have the required strength, mounting-bolt, and top plate dimensions. Screw foundations shall be of at least 6.4 mm (1/4 inch) thick structural steel conforming to ASTM A 36/A 36M and hot-dip galvanized in accordance with ASTM A 123/A 123M. Conduit slots in screw foundation shafts and top plates shall be marked to indicate orientation. Design calculations indicating adequate strength shall be approved before installation of screw foundation is permitted. Calculations shall be submitted in accordance with the detail drawings portion of paragraph SUBMITTALS.

3.3 CROSSARM MOUNTING

Crossarms shall be bolted to poles with 15.9 mm (5/8 inch) through-bolts with square washers at each end. Bolts shall extend not less than 3 mm nor more than 50 mm beyond nuts. On single crossarm construction, the bolt head shall be installed on the crossarm side of the pole. Metal crossarm braces shall be provided on crossarms. Flat braces may be provided for 2.4 m (8 foot) crossarms and shall be 6.4 by 31.8 mm (1/4 by 1-1/4 inches), not less than 700 mm (28 inches) in length. Flat braces shall be bolted to arms with 9.5 mm (3/8 inch) carriage bolts with round or square washers between boltheads and crossarms, and secured to poles with 50.8 by 101.6 mm (1/2 by 4 inch) lag screws after crossarms are leveled and aligned. Angle braces are required for 3.1 m (10 foot) crossarms and shall be 1.5 m (60 inch) span by 457.2 mm (18 inch) drop formed in one piece from 38.1 by 38.1 by 4.8 mm (1-1/2 by 1-1/2 by 3/16 inch) angle. Angle braces shall be bolted to crossarms with 50.8 mm (1/2 inch) bolts with round or square washers between boltheads and crossarms, and secured to poles with 15.9 mm (5/8 inch) through-bolts. Double crossarms shall be securely held in position by means of 15.9 mm (5/8 inch) double-arming bolts. Each double-arming bolt shall be equipped with four nuts and four square washers.

3.3.1 Line Arms and Buck Arms

Line arms and buck arms shall be set at right angles to lines for straight runs and for angles 45 degrees and greater; and line arms shall bisect angles of turns of less than 45 degrees. Dead-end assemblies shall be used for turns where shown. Buckarms shall be installed, as shown, at corners and junction poles. Double crossarms shall be provided at ends of joint use or conflict sections, at dead-ends, and at angles and corners to provide adequate vertical and longitudinal strength. Double crossarms shall be provided at each line-crossing structure and where lines not attached to the same pole cross each other.

3.3.2 Equipment Arms

Equipment arms shall be set parallel or at right angles to lines as required to provide climbing space. Equipment arms shall be located below line construction to provide necessary wire and equipment clearances.

3.4 GUY INSTALLATION

Guys shall be provided where conductor tensions are not balanced, such as at angles, corners, and dead-ends. Where a single guy will not provide the required strength, two or more guys shall be provided. Where guys are wrapped around poles, at least two guy hooks shall be provided and pole shims shall be provided where guy tension exceeds 27 kN (6000 pounds). Guy clamps 152.4 mm (6 inches) in length with three 15.9 mm (5/8 inch) bolts, or offset-type guy clamps, or approved guy grips shall be provided at each guy terminal. Multiple-helix screw anchors shall be provided in marshy ground; rock anchors shall be installed in rock at right angles to guys, elsewhere anchors shall be of an expanding type, except that power installed screw anchors of equivalent holding power are acceptable. A half-round yellow polyvinyl, fiberglass, or other suitable plastic guy marker, not less than 2.4 m (8 feet) in length, shall be provided at the anchor end of each guy shown, securely clamped to the guy or anchor at the bottom and top of the marker. Holding capacities for down guys shall be based on a lead angle of 45 degrees.

3.5 CONDUCTOR INSTALLATION

3.5.1 Line Conductors

Unless otherwise indicated, conductors shall be installed in accordance with manufacturer's approved tables of sags and tensions. Proper care shall be taken in handling and stringing conductors to avoid abrasions, sharp bends, cuts, kinks, or any possibility of damage to insulation or conductors. Conductors shall be paid out with the free end of conductors fixed and cable reels portable, except where terrain or obstructions make this method unfeasible. Bend radius for any insulated conductor shall not be less than the applicable NEMA specification recommendation. Conductors shall not be drawn over rough or rocky ground, nor around sharp bends. When installed by machine power, conductors shall be drawn from a mounted reel through stringing sheaves in straight lines clear of obstructions. Initial sag and tension shall be checked by the Contractor, in accordance with the manufacturer's approved sag and tension charts, within an elapsed time after installation as recommended by the manufacturer.

3.5.2 Connectors and Splicess

Connectors and splices shall be mechanically and electrically secure under tension and shall be of the nonbolted compression type. The tensile strength of any splice shall be not less than the rated breaking strength of the conductor. Splice materials, sleeves, fittings, and connectors shall be noncorrosive and shall not adversely affect conductors. Aluminum-composition conductors shall be wire brushed and an oxide inhibitor applied before making a compression connection. Connectors which are factory-filled with an inhibitor are acceptable. Inhibitors and compression tools shall be of types recommended by the connector manufacturer. Primary line apparatus taps shall be by means of hot line clamps attached to compression type bail clamps (stirrups). Low-voltage connectors for copper conductors shall be of the solderless pressure type. Noninsulated connectors shall be smoothly taped to provide a waterproofinsulation equivalent to the original insulation, when installed on insulated conductors. On overhead connections of aluminum and copper, the aluminum shall be installed above the copper.

3.5.3 Conductor-To-Insulator Attachments

Conductors shall be attached to insulators by means of clamps, shoes or tie wires, in accordance with the type of insulator. For insulators requiring conductor tie-wire attachments, tie-wire sizes shall be as indicated in TABLE II.

TABLE II

TIE-WIRE REQUIREMENTS

CONDUCTOR Copper (AWG)	TIE WIRE Soft-Drawn Copper (AWG)
6	8
4 and 2	6
1 through 3/0	4
4/0 and larger	2
AAC, AAAC, or ACSR (AWG)	AAAC OR AAC (AWG)
Any size	6 or 4

3.5.4 Armor Rods

Armor rods shall be provided for AAC, AAAC, and ACSR conductors. Armor rods shall be installed at supports, except armor rods will not be required at primary dead-end assemblies if aluminum or aluminum-lined zinc-coated steel clamps are used. Lengths and methods of fastening armor rods shall be in accordance with the manufacturer's recommendations. For span lengths of less than 61 m, flat aluminum armor rods may be used. Flat armor rods, not less than 762.0 micrometers by 6.4 mm (0.03 by 0.25 inch) shall be used on No. 1 AWG AAC and AAAC and smaller conductors and on No. 5 AWG ACSR and smaller conductors. On larger sizes, flat armor rods shall be not less than 1.3 by 7.6 mm (0.05 by 0.30 inches). For span lengths of 61 m or more, preformed round armor rods shall be used.

3.5.5 Medium-Voltage Insulated Cables

Medium-voltage cable messengers shall be attached to poles with clamps providing a strength exceeding the required messenger strength and with not less than 15.9 mm (5/8 inch) through-bolts. Messengers shall be dead-ended, grounded, and line-guyed at corners and dead-ends, and at intervals not exceeding 305 m along straight runs.

3.6 TRANSFORMER INSTALLATION

Transformers shall be carefully installed so as not to scratch finishes or damage bushings. Transformers shall be installed in accordance with the manufacturer's instructions. After installation, surfaces shall be inspected and scratches shall be touched up with a finish provided by the transformer manufacturer for this purpose.

3.7 CONNECTIONS TO UTILITY LINES

The Contractor shall coordinate the work with the Contracting Officer and shall provide for final connections to the utility electric lines.

3.8 CONNECTIONS BETWEEN AERIAL AND UNDERGROUND SYSTEMS

Connections between aerial and underground systems shall be made as shown. Underground cables shall be extended up poles in conduit to cable terminations. Conduits shall be secured to poles by two-hole galvanized steel pipe straps spaced not more than 3 m apart and with one support not more than 300 mm from any bend or termination. Cables shall be supported by devices separate from the conduit or guard, near their point of exit from the riser conduit or guard. Cables guards shall be secured in accordance with the manufacturers published procedure. Risers shall be equipped with bushings to protect cables. Capnut potheads shall be used to terminate medium-voltage multiple-conductor cable.

3.9 CONNECTIONS TO BUILDINGS

3.9.1 Aerial Services

Connections to buildings shall be made at approximately the point indicated and shall be connected to the service entrance conductors. Supports at buildings shall be adequate to withstand required pulls; supports shall not be rated less than 4450 N (1000 pounds). Drip loops shall be formed on conductors at entrances to buildings, cabinets, or conduits. Service-entrance conduits with termination fittings and conductors within the building, including sufficient slack for connection to aerial service cables, shall conform to the requirements of Section 16402 Interior distribution system.

3.10 GROUNDING

Noncurrent-carrying metal parts of equipment and conductor assemblies, such as luminaires, medium-voltage cable terminations and messengers, metal poles, operating mechanisms of pole top switches, panel enclosures, transformers, capacitors, recloser frames (cases) and other noncurrent-carrying metal items shall be grounded. Additional grounding of equipment, neutral, and surge arrester grounding systems shall be installed at poles where indicated.

3.10.1 Grounding Electrodes

Grounding electrodes shall be installed as follows:

a. Driven rod electrodes - Unless otherwise indicated, ground rods shall be located approximately 900 mm out from base of the pole and shall be driven into the earth until the tops of the rods are approximately 300 mm below finished grade. Multiple rods shall be evenly spaced at least 3 m apart and connected together 600 mm below grade with a minimum No. 6 bare copper conductor.

b. Pole butt electrodes - Pole butt electrodes shall not be the sole grounding electrode at transformer locations. The pole butt electrode shall consist of a coil of at least 4 m of minimum No. 6 bare copper conductor stapled to the butt of the pole.

c. Plate electrodes - Plate electrodes shall be installed in accordance with the IEEE C2 and NFPA 70.

d. Ground Resistance - The maximum resistance of a driven ground rod shall not exceed 10 ohms under normally dry conditions. Whenever the required ground resistance is not met, provide additional

electrodes interconnected with grounding conductors, to achieve the specified ground resistance. The additional electrodes will be up to three, 2.4 m (8 feet) rods spaced a minimum of 3 m (10 feet) apart . In high ground resistance, UL listed chemically charged ground rods may be used. If the resultant resistance exceeds 25 ohms measured not less than 48 hours after rainfall, the Contracting Officer shall be notifies immediately. Connections below grade shall be fusion welded. Connections above grade shall be fusion welded or shall use UL 467 approved connectors.

3.10.2 Grounding and Bonding Connections

Connections above grade shall be made by the fusion-welding process or with bolted solderless connectors in compliance with UL 467, and those below grade shall be made by a fusion-welding process. Where grounding conductors are connected to aluminum-composition conductors, specially treated or lined copper-to-aluminum connectors suitable for this purpose shall be used.

3.10.3 Grounding Electrode Conductors

On multi-grounded circuits, as defined in IEEE C2, provide a single continuous vertical grounding electrode conductor. Neutrals, surge arresters, and equipment grounding conductors shall be bonded to this conductor. For single grounded or ungrounded systems, provide a grounding conductor for the surge arrester and equipment grounding conductors and a separate grounding conductor for the secondary neutrals. Grounding electrode conductors shall be sized as shown. Secondary system neutral conductors shall be connected directly to the transformer neutral bushings, then connected with a neutral bonding jumper between the transformer neutral bushing and the vertical grounding electrode conductor, as shown. On metal poles, a preformed galvanized steel strap, 15.9 mm (5/8 inch) wide by 0.853 (22 gauge) minimum by length, secured by a preformed locking method standard with the manufacturer, shall be used to support a grounding electrode conductor installation on the pole and spaced at intervals not exceeding 1.5 m with one band not more than 75 mm from each end of the vertical grounding electrode conductor. Bends greater than 45 degrees in grounding electrode conductor are not permitted.

3.11 FIELD TESTING

3.11.1 General

Field testing shall be performed in the presence of the Contracting Officer. The Contractor shall notify the Contracting Officer 10 days prior to conducting tests. The Contractor shall furnish materials, labor, and equipment necessary to conduct field tests. The Contractor shall perform tests and inspections recommended by the manufacturer unless specifically waived by the Contracting Officer. The Contractor shall maintain a written record of tests which includes date, test performed, personnel involved, devices tested, serial number and name of test equipment, and test results. Field reports will be signed and dated by the Contractor.

3.11.2 Safety

The Contractor shall provide and use safety devices such as rubber gloves, protective barriers, and danger signs to protect and warn personnel in the test vicinity. The Contractor shall replace any devices or equipment which are damaged due to improper test procedures or handling.

3.11.3 Ground-Resistance Tests

The resistance of each grounding electrode system shall be measured using the fall-of-potential method defined in IEEE Std 81. Ground resistance measurements shall be made before the electrical distribution system is energized and shall be made in normally dry conditions not less than 48 hours after the last rainfall. Resistance measurements of separate grounding electrode systems shall be made before the systems are bonded together below grade. The combined resistance of separate systems may be used to meet the required resistance, but the specified number of electrodes shall be provided.

3.11.4 Medium-Voltage Preassembled Cable Test

After installation, prior to connection to an existing system, and before the operating test, the medium-voltage preassembled cable system shall be given a high potential test. Direct-current voltage shall be applied on each phase conductor of the system by connecting conductors at one terminal and connecting grounds or metallic shieldings or sheaths of the cable at the other terminal for each test. Prior to the test, the cables shall be isolated by opening applicable protective devices and disconnecting equipment. The method, voltage, length of time, and other characteristics of the test for initial installation shall be in accordance with NEMA WC 74 for the particular type of cable installed, and shall not exceed the recommendations of IEEE Std 404 for cable joints unless the cable and accessory manufacturers indicate higher voltages are acceptable for testing. Should any cable fail due to a weakness of conductor insulation or due to defects or injuries incidental to the installation or because of improper installation of cable, cable joints, terminations, or other connections, the Contractor shall make necessary repairs or replace cables as directed. Repaired or replaced cables shall be retested.

3.11.5 Sag and Tension Test

The Contracting Officer shall be given prior notice of the time schedule for stringing conductors or cables serving overhead medium-voltage circuits and reserves the right to witness the procedures used for ascertaining that initial stringing sags and tensions are in compliance with requirements for the applicable loading district and cable weight.

3.11.6 Low-Voltage Cable Test

For underground secondary or service laterals from overhead lines, the low-voltage cable, complete with splices, shall be tested for insulation resistance after the cables are installed, in their final configuration, ready for connection to the equipment, and prior to energization. The test voltage shall be 500 volts dc, applied for one minute between each conductor and ground and between all possible combinations of conductors in the same trench, duct, or cable, with other conductors in the same trench, duct, or conduit. The minimum value of insulation shall be:

R in megohms = (rated voltage in kV + 1) x 304,800/(length of cable in meters)

Each cable failing this test shall be repaired or replaced. The repaired cable shall then be retested until failures have been eliminated.

3.11.7 Liquid-Filled Transformer Tests

The following field tests shall be performed on liquid-filled transformers 750 kVA and above. Pass-fail criteria shall be in accordance with the transformer manufacturer's specifications.

a. a. Insulation resistance test phase-to-ground.

b. Turns ratio test.

c. Correct phase sequence.

3.11.8 Pre-Energization Services

The following services shall be performed on the equipment listed below. These services shall be performed subsequent to testing but prior to the initial energization. The equipment shall be inspected to insure that installation is in compliance with the recommendations of the manufacturer and as shown on the detail drawings. Terminations of conductors at major equipment shall be inspected to ensure the adequacy of connections. Bare and insulated conductors between such terminations shall be inspected to detect possible damage during installation. If factory tests were not performed on completed assemblies, tests shall be performed after the installation of completed assemblies. Components shall be inspected for damage caused during installation or shipment and to ensure that packaging materials have been removed. Components capable of being both manually and electrically operated shall be operated manually prior to the first electrical operation. Components capable of being calibrated, adjusted, and tested shall be calibrated, adjusted, and tested in accordance with the instructions of the equipment manufacturer. Items for which such services shall be provided, but are not limited to, are the following:

Automatic circuit reclosers.

Switches.

Transformers.

3.11.9 Operating Tests

After the installation is completed, and at such time as the Contracting Officer may direct, the Contractor shall conduct operating tests for approval. The equipment shall be demonstrated to operate in accordance with the specified requirements. An operating test report shall be submitted in accordance with paragraph SUBMITTALS.

3.12 MANUFACTURER'S FIELD SERVICE

3.12.1 Onsite Training

The Contractor shall conduct a training course for the operating staff as designated by the Contracting Officer. The training period shall consist of a total of 16 hours of normal working time and shall start after the system is functionally completed but prior to final acceptance tests. The course instruction shall cover pertinent points involved in operating, starting, stopping, servicing the equipment, as well as all major elements of the operation and maintenance manuals. Additionally, the course instructions shall demonstrate all routine maintenance operations. A VHS format video

tape of the entire training session shall be submitted.

3.12.2 Installation Engineer

After delivery of the equipment, the Contractor shall furnish one or more field engineers, regularly employed by the equipment manufacturer to supervise the installation of the equipment, assist in the performance of the onsite tests, initial operation, and instruct personnel as to the operational and maintenance features of the equipment.

3.13 ACCEPTANCE

Final acceptance of the facility will not be given until the Contractor has successfully completed all tests and after all defects in installation, material or operation have been corrected.

-- End of Section --

SECTION 16375

ELECTRICAL DISTRIBUTION SYSTEM, UNDERGROUND

PART 1 GENERAL

1.1 REFERENCES

The publications listed below form a part of this specification to the extent referenced. The publications are referred to in the text by basic designation only.

Unless noted otherwise, all material used shall be in compliance with the requirements of the applicable German (DIN) Standards. In the event DIN Standard material is unavailable, contractor may then select comparable British Standard (BS), or Underwriters Laboratories Inc. (UL) listed material. Equipment enclosure types shall be in compliance with the National Electrical Manufacturer's Association (NEMA) or the International Electro-Technical Committee (IEC) standards. Material and equipment installed under this contract shall be for the appropriate application.

AMERICAN ASSOCIATION OF STATE HIGHWAY AND TRANSPORTATION OFFICIALS (AASHTO)

AASHTO HB-17	Highway Bridges-Division I-Section 14: Bearings

AMERICAN NATIONAL STANDARDS INSTITUTE (ANSI)

ANSI C80.1	(1995) Rigid Steel Conduit - Zinc Coated
ANSI C 80.6	(1994) Intermediate Metal Conduit - Zinc Coated (IMC)

ASTM INTERNATIONAL (ASTM)

ASTM A 123/A 123M	(2001) Zinc (Hot-Dip Galvanized) Coatings on Iron and Steel Products
ASTM A 153/A 153M	(2001) Zinc Coating (Hot-Dip) on Iron and Steel Hardware
ASTM C 478	(1997) Precast Reinforced Concrete Manhole Sections
ASTM C 478M	(1997) Precast Reinforced Concrete Manhole Sections (Metric)

BRITISH STANDARDS INSTITUTION (BSI)

BS 14396	(2004) Fixed ladders for manholes.
BS 31	(1940: Amd 5) Steel Conduit and Fittings for Electrical Wiring
BS 4568	(1970) Specification for steel conduit and

	fittings with metric threads of ISO form for electrical installations. Steel conduit, bends and couplers
BS 4607: Part 5	(1984) Non-metallic conduit fittings for electrical installations; Part 5. Rigid conduit, fittings and components of insulating material
BS 6651	(1999) Code Of Practice For Protection Of Structures Against Lightning
BS 7430	(1998) Code of Practice for Earthing
BS 7671	(1992) Requirements for Electrical Installations
BS 7888	(1998) LV and MV accessories for power cables with rated voltage from 0.6/1 kV up to and including 20.8/36 kV. General

DUETSCHES INSTITUTE FUR NORMUNG (DIN)

DIN EN 14396	(2004) Fixed ladders for manholes; German version.
DIN 40430	(1971) Steel Conduit Thread; Dimensions
DIN 49005	(1956) Conduit for electrical wiring; bushing nipples for steel armoured conduits
DIN 49020	(1959) Conduit for Electrical Wiring; Screwed Steel Conduit, Plain Conduit, Couplers
DIN VDE 0278-623/A1	(2004) Power cable accessories with rated voltages up to 30kV - Part 623: Specification for joints, stop ends and outdoor terminations for distribution cables of rated voltage 0.6/1.0 kV.
DIN EN 61537	(2001) Cable tray systems and cable ladder system for cable management; German version.

INTERNATIONAL ELECTROTECHNICAL COMMISSION (IEC)

IEC 60502	(1998) Power cables with extruded insulation and their accessories for rated voltages from 1 kV
IEC 60702	(2002) Mineral insulated cables and their terminations with a rated voltage not exceeding 750 V - Part 1: Cables
IEC 61035	(1990) Specification for conduit fittings for electrical installations
IEC 61386	(1996) Conduit systems for electrical

	installations
IEC 61537	(2001) Cable tray systems and cable ladder system for cable management.

INSTITUTE OF ELECTRICAL AND ELECTRONICS ENGINEERS (IEEE)

IEEE C2	(2002) National Electrical Safety Code
IEEE Std 100	(1997) IEEE Standard Dictionary of Electrical and Electronics Terms
IEEE Std 386	(1995) Separable Insulated Connector Systems for Power Distribution Systems Above 600V
IEEE Std 404	(1993) Cable Joints for Use with Extruded Dielectric Cable Rated 5000 V Through 138 000 V and Cable Joints for Use with Laminated Dielectric Cable Rated 2500 V Through 500 000 V
IEEE Std 48	(1998) Standard Test Procedures and Requirements for Alternating-Current Cable Terminations 2.5 kV through 765 kV
IEEE Std 592	(1990; R 1996) Exposed Semiconducting Shields on Premolded High Voltage Cable Joints and Separable Insulated Connectors

NATIONAL ELECTRICAL MANUFACTURERS ASSOCIATION (NEMA)

NEMA FB 1	(1993) Fittings, Cast Metal Boxes, and Conduit Bodies for Conduit and Cable Assemblies
NEMA TC 6	(1990) PVC and ABS Plastic Utilities Duct for Underground Installation
NEMA WC 70	(1999) Non-Shielded Power Cable 2000 V or Less

NATIONAL FIRE PROTECTION ASSOCIATION (NFPA)

NFPA 70	(2005) National Electrical Code

UNDERWRITERS LABORATORIES (UL)

UL 1242	(1996; Rev Mar 1998) Intermediate Metal Conduit
UL 467	(1993; R 2001) Grounding and Bonding Equipment
UL 514A	(1996; Rev Dec 1999) Metallic Outlet Boxes
UL 6	(1997) Rigid Metal Conduit

1.2 GENERAL REQUIREMENTS

1.2.1 Terminology

Terminology used in this specification is as defined in IEEE Std 100.

1.2.2 Service Conditions

Items provided under this section shall be specifically suitable for the following service conditions. Seismic details shall conform to Section 16070 SEISMIC PROTECTION FOR ELECTRICAL EQUIPMENT.

a. Fungus Control: None

b. Altitude: 878 m

c. Ambient Temperature - 5.5 to + 44.4 degrees C

d. Frequency: 50 Hz

e. Corrosive Areas: None

1.3 SUBMITTALS

Government approval is required for submittals with a "G" designation; submittals not having a "G" designation are for information only. When used, a designation following the "G" designation identifies the office that will review the submittal for the Government. The following shall be submitted in accordance with Section 01330 SUBMITTAL PROCEDURES:

SD-03 Product Data

Catalogcuts, product data or printed information in sufficient detail to vertify compliance with the requirements of the contract documents.

PART 2 PRODUCTS

2.1 CORROSION PROTECTION

2.1.1 Aluminum Materials

Aluminum shall not be used.

2.1.2 Ferrous Metal Materials

2.1.2.1 Hardware

Ferrous metal hardware shall be hot-dip galvanized in accordance with ASTM A 153/A 153M and ASTM A 123/A 123M.

2.2 CABLES

Cables shall be single or multi-conductor type.

Cables shall meet applicable requirements of NFPA 70 for type of insulation, jacket, and conductor specified or indicated. Cables manufactured more than 12 months prior to date of delivery to site shall not be used. All cables shall be funished in accordance with the

requirements below, and shall conform to the detailed requirments specified herein.

Basis of Design: El Sewedy Cables, General Cable, or HES Kablo.

2.2.1 Low Voltage Cables

Cables shall be rated 600 volts and shall confirm to the requirements of NFPA 70, Cable shall be Cu conductor Multicore cable and shall have an overall outer PVC Jacket. Whenever cables shall be exposed and subjected to sun ,it has to be insulated by ultraviolet insulation.

2.2.2 Medium-Voltage Cables (15KV)

2.2.2.1 Single and Multicore Copper Conductors

Stranded circular compacted copper conductor, semi conducting layer as conductor screen, XLPE insulated, semi conducting layer as nonmetallic insulatin screen, three cores assembled together with non-hygroscopic ply propylene fillers, wrappers with polyester tape and PVC sheathed. All cables should be manufacturered as per IEC 60502.

2.3 CABLE JOINTS, TERMINATIONS, AND CONNECTORS

Basis of Design: IPP or Elastomold.

2.3.1 Medium-Voltage Cable Joints

Medium-voltage cable joints shall comply with IEEE Std 404 and IEEE Std 592 and DIN VDE 0278-623/A1, or BS 7888. Medium-voltage cable terminations shall comply with IEEE Std 48. Joints shall be the standard products of a manufacturer and shall be either of the factory preformed type or of the kit type containing tapes and other required parts. Joints shall have ratings not less than the ratings of the cables on which they are installed. Splice kits may be of the heat-shrinkable type for voltages up to 15 kV, of the premolded splice and connector type, the conventional taped type, or the resin pressure-filled overcast taped type for voltages up to 35 kV; except that for voltages of 7.5 kV or less a resin pressure-filled type utilizing a plastic-tape mold is acceptable. Joints used in manholes, handholes, vaults and pull boxes shall be certified by the manufacturer for waterproof, submersible applications.

2.3.2 Medium-Voltage Separable Insulated Connectors

Separable insulated connectors shall comply with IEEE Std 386 and IEEE Std 592 and shall be of suitable construction or standard splice kits shall be used. Separable insulated connectors are acceptable for voltages up to 35 kV. Connectors shall be of the loadbreak type as indicated, of suitable construction for the application and the type of cable connected, and shall include cable shield adaptors. Separable insulated connectors shall not be used as substitutes for conventional permanent splices. External clamping .

2.3.3 Terminations

Terminations shall be in accordance with IEEE Std 48 or IEC 60702, heat-shrinkable elastomer, or taped type. Acceptable elastomers are track-resistant silicone rubber or track-resistant ethylene propylene compounds, such as ethylene propylene rubber or ethylene propylene diene

monomer.

2.4 CONDUIT AND DUCTS

Ducts shall be single, round-bore type, with wall thickness and fittings suitable for the application.

2.4.1 Metallic Conduit

Intermediate metal conduit shall comply with UL 1242, DIN 49020, DIN 49005, DIN 40430, IEC 61386, IEC 61035, BS 4568 OR ANSI C 80.6 zinc-coated steel only.BS 31. Rigid galvanized steel conduit shall comply with IEC 61035, BS 4568, UL 6 and ANSI C80.1. Metallic conduit fittings and outlets shall comply with UL 514A and NEMA FB 1.

2.4.2 Nonmetallic Conduits

PVC conduit, fittings, and accessories Basis of Design: Juplast, Nepro, Ipex, Heritage Plastics Group, IPS, or Canalar Boru.

2.4.2.1 Concrete Encased Ducts

NEMA TC 6 Type EB or, BS 4607: Part 5.

2.4.3 Conduit Sealing Compound

Compounds for sealing ducts and conduit shall have a putty-like consistency workable with the hands at temperatures as low as 2 degrees C (35 degrees F), shall neither slump at a temperature of 150 degrees C (300 degrees F), nor harden materially when exposed to the air. Compounds shall adhere to clean surfaces of fiber or plastic ducts; metallic conduits or conduit coatings; concrete, masonry, or lead; any cable sheaths, jackets, covers, or insulation materials; and the common metals. Compounds shall form a seal without dissolving, noticeably changing characteristics, or removing any of the ingredients. Compounds shall have no injurious effect upon the hands of workmen or upon materials.

2.4.4 Cable Ladders

For manholes, use cable ladders in accordance with BS 14396, DIN EN 14396, IEC 61537, or DIN EN 61537. Dimensions will be as indicated on Drawings.

2.4.5 Connection Materials

All grounding material should be in accordance with BS 7430.

2.5 MANHOLES, HANDHOLES, AND PULLBOXES

Strength of manholes, handholes, and pullboxes and their frames and covers shall conform to the requirements of IEEE C2. Cast-in-place concrete manholes shall have the required strength established by ASTM C 478, ASTM C 478M. Frames and covers shall be made of gray cast iron and a machine-finished seat shall be provided to ensure a matching joint between frame and cover. Handholes for low voltage cables installed in parking lots, sidewalks, and turfed areas shall be fabricated from an aggregate consisting of sand and with continuous woven glass strands. Pullbox and handhole covers in sidewalks, and turfed areas shall be of the same material as the box.

All manholes at ground level shall be capable of withstanding H-20 highway loading as defined by AASHTO HB-17.

Basis of Design: Framaco or Supercast B1988-A9.

2.6 FENCING

Fencing shall conform to the requirements of Section 02821 FENCING.

2.7 GROUNDING AND BONDING

Ground rods shall be UL 467, BS 7430 or BS 6651. Copper-clad steel, with minimum diameter of 20 mm and minimum length of 3000 mm.

Basis of Design: Erico Cadweld, Wallis Systems Protection, Exoweld, or ThermOweld.

PART 3 EXECUTION

3.1 GENERAL INSTALLATION REQUIREMENTS

3.1.1 Conformance to Codes

The installation shall comply with the requirements and recommendations of NFPA 70 and IEEE C2, or BS 7671 as applicable.

3.1.2 Verification of Dimensions

The Contractor shall become familiar with details of the work, shall verify dimensions in the field, and shall advise the Government of any discrepancy before performing any work.

3.2 CABLE INSTALLATION

The Contractor shall obtain from the manufacturer an installation manual or set of instructions which addresses such aspects as cable construction, insulation type, cable diameter, bending radius, cable temperature, lubricants, coefficient of friction, conduit cleaning, storage procedures, moisture seals, testing for and purging moisture, etc. The Contractor shall then perform pulling calculations and prepare a pulling plan.

3.2.1 Cable Installation Plan and Procedure

Cable shall be installed strictly in accordance with the cable manufacturer's recommendations.

3.2.1.1 Cable Inspection

The cable reel shall be inspected for correct storage positions, signs of physical damage, and broken end seals. If end seal is broken, moisture shall be removed from cable in accordance with the cable manufacturer's recommendations.

3.2.1.2 Duct Cleaning

Duct shall be cleaned with an assembly that consists of a flexible mandrel (manufacturers standard product in lengths recommended for the specific size and type of duct) that is 6.4 mm (1/4 inch) less than inside diameter

of duct, 2 wire brushes, and a rag. The cleaning assembly shall be pulled through conduit a minimum of 2 times or until less than a volume of 131 cubic centimeters (8 cubic inches) of debris is expelled from the duct.

3.2.1.3 Duct Lubrication

The cable lubricant shall be compatible with the cable jacket for cable that is being installed. Application of lubricant shall be in accordance with lubricant manufacturer's recommendations.

3.2.1.4 Cable Installation

The Contractor shall provide a cable feeding truck and a cable pulling winch as required. The Contractor shall provide a pulling grip or pulling eye in accordance with cable manufacturer's recommendations. The pulling grip or pulling eye apparatus shall be attached to polypropylene or manilla rope followed by lubricant front end packs and then by power cables. A dynamometer shall be used to monitor pulling tension. Pulling tension shall not exceed cable manufacturer's recommendations. The Contractor shall not allow cables to cross over while cables are being fed into duct. For cable installation in cold weather, cables shall be kept at 10 degrees C (50 degrees F) temperature for at least 24 hours before installation.

3.2.2 Duct Line

Cables shall be installed in duct lines where indicated. Cable splices in low-voltage cables shall be made in manholes and handholes only, except as otherwise noted. Neutral and grounding conductors shall be installed in the same duct with their associated phase conductors.

3.2.3 Electric Manholes

Cables shall be routed around the interior walls and securely supported from walls on cables racks. Cable routing shall minimize cable crossover, provide access space for maintenance and installation of additional cables, and maintain cable separation in accordance with IEEE C2.

3.3 DUCT LINES

3.3.1 Requirements

Site Primary & Secondary Power Distribution System: This shall include installation of Primary (15kV) and Secondary Power Distribution Systems in underground, concrete encased duct-bank system. Duct-bank system shall include manholes (2.4M x 2.4M x 2.4M) for high voltage feeders and hand-holes for secondary power as required. Manholes shall be provided with cable pulling irons and a ground rod. Ground rod shall be galvanized steel, 3M long and 19mm in diameter.

Raceways: Exterior raceways (encased conduit and other conduits) shall be installed at a slope towards a manhole or hand-hole to avoid collection of water in raceway. Conduit shall be PVC, thin-wall for concrete encasement and hard-wall (Schedule 40) for direct burial. Direct buried conduit shall only be installed for street lighting circuits. Direct buried conduits shall be enclosed in concrete, when under paved areas or under road crossings. High voltage cables shall be installed in conduit no less than 100mm (4 inches) in diameter. Secondary cable shall be installed in conduit no less than 50mm (2 inches). Encased conduits shall be cleaned with a wire mandrel prior to the installation of cables. Minimum of one spare conduit

shall be provided in all duct-banks and capped at both ends. Top of the duct-bank shall be below the frost line or a minimum of 450 mm (18 inches) below grade, but not less than required in NFPA 70. Direct buried conduit shall be installed 450 mm (18 inches) below grade, but not less than required in NFPA 70.

3.3.2 Treatment

Ducts shall be kept clean of concrete, dirt, or foreign substances during construction. Field cuts requiring tapers shall be made with proper tools and match factory tapers. A coupling recommended by the duct manufacturer shall be used whenever an existing duct is connected to a duct of different material or shape. Ducts shall be stored to avoid warping and deterioration with ends sufficiently plugged to prevent entry of any water or solid substances. Ducts shall be thoroughly cleaned before being laid. Plastic ducts shall be stored on a flat surface and protected from the direct rays of the sun.

3.3.3 Concrete Encasement

Ducts requiring concrete encasements shall comply with NFPA 70, except that electrical encased conduit configurations for ducts 150 mm (6 inches) in diameter shall be determined by calculation and as shown on the drawings. The separation between adjacent electric power and communication ducts shall conform to IEEE C2. Duct line encasements shall be monolithic construction. Where a connection is made to a previously poured encasement, the new encasement shall be well bonded or doweled to the existing encasement. The Contractor shall submit proposed bonding method for approval in accordance with the detail drawing portion of paragraph SUBMITTALS. At any point, except railroad and airfield crossings, tops of concrete encasements shall be not less than the cover requirements listed in NFPA 70. At railroad and airfield crossings, duct lines shall be encased with concrete and reinforced as indicated to withstand specified surface loadings. Tops of concrete encasements shall be not less than 1.5 m below tops of rails or airfield paving unless otherwise indicated. Where ducts are jacked under existing pavement, rigid steel conduit will be installed because of its strength. To protect the corrosion-resistant conduit coating, predrilling or installing conduit inside a larger iron pipe sleeve (jack-and-sleeve) is required. For crossings of existing railroads and airfield pavements greater than 15 m in length, the predrilling method or the jack-and-sleeve method will be used. Separators or spacing blocks shall be made of steel, concrete, plastic, or a combination of these materials placed not farther apart than 1.2 m on centers. Ducts shall be securely anchored to prevent movement during the placement of concrete and joints shall be staggered at least 150 mm vertically.

3.3.4 Installation of Couplings

Joints in each type of duct shall be made up in accordance with the manufacturer's recommendations for the particular type of duct and coupling selected and as approved.

3.3.4.1 Plastic Duct

Duct joints shall be made by brushing a plastic solvent cement on insides of plastic coupling fittings and on outsides of duct ends. Each duct and fitting shall then be slipped together with a quick 1/4-turn twist to set

the joint tightly.

3.3.5 Duct Line Markers

Duct line markers shall be provided at the ends of long duct line stubouts or for other ducts whose locations are indeterminate because of duct curvature or terminations at completely below-grade structures. In addition to markers, a 0.127 mm (5 mil) brightly colored plastic tape, not less than 75 mm (3 inches) in width and suitably inscribed at not more than 3 m (10 feet) on centers with a continuous metallic backing and a corrosion-resistant 0.0254 mm (1 mil) metallic foil core to permit easy location of the duct line, shall be placed approximately 300 mm below finished grade levels of such lines.

3.4 MANHOLES, HANDHOLES, AND PULLBOXES

3.4.1 General

Manholes shall be constructed approximately where shown. The exact location of each manhole shall be determined after careful consideration has been given to the location of other utilities, grading, and paving. The location of each manhole shall be approved by the Government before construction of the manhole is started. Manholes shall be the type noted on the drawings and shall be constructed in accordance with the applicable details as indicated. Top, walls, and bottom shall consist of reinforced concrete. In paved areas, frames and covers for manhole and handhole entrances in vehicular traffic areas shall be flush with the finished surface of the paving. In unpaved areas, the top of manhole covers shall be approximately 5 mm above the finished grade. Where existing grades that are higher than finished grades are encountered, concrete assemblies designed for the purpose shall be installed to elevate temporarily the manhole cover to existing grade level. All duct lines entering manholes must be installed on compact soil or otherwise supported when entering a manhole to prevent shear stress on the duct at the point of entrance to the manhole. Duct lines entering cast-in-place concrete manholes shall be cast in-place with the manhole. Duct lines entering precast concrete manholes through a precast knockout penetration shall be grouted tight with a portland cement mortar. PVC duct lines entering precast manholes through a PVC endbell shall be solvent welded to the endbell. A cast metal grille-type sump frame and cover shall be installed over the manhole sump.

3.4.2 Electric Manholes

Cables shall be securely supported from walls according to International Building Code requirements and ASTM standards.

3.4.3 Communications Manholes

Cables shall be securely supported from walls according.

3.4.4 Handholes

Handholes shall be located approximately as shown. Handholes shall be of the type noted on the drawings and shall be constructed in accordance with the details shown.

3.4.5 Ground Rods

A ground rod shall be installed at the manholes, handholes and pullboxes.

Ground rods shall be driven into the earth before the manhole floor is poured so that approximately 100 mm of the ground rod will extend above the manhole floor. When precast concrete manholes are used, the top of the ground rod may be below the manhole floor and a 50 square millimeters ground conductor brought into the manhole through a watertight sleeve in the manhole wall.

3.5 GROUNDING

A ground ring consisting of the indicated configuration of bare copper conductors and driven ground rods shall be installed around pad-mounted equipment as shown. Equipment frames of metal-enclosed equipment, and other noncurrent-carrying metal parts, such as cable shields, cable sheaths and armor, and metallic conduit shall be grounded. At least 2 connections shall be provided from a transformer, to the ground mat. Metallic frames and covers of handholes and pull boxes shall be grounded by use of a braided, copper ground strap with equivalent ampacity of 16 square millimeters.

3.5.1 Grounding Electrodes

Grounding electrodes shall be installed as shown on the drawings.

3.5.1.1 Additional Electrodes

When the required ground resistance is not met, additional electrodes shall be provided interconnected with grounding conductors to achieve the specified ground resistance. The additional electrodes will be up to three, 3 m (10 feet) rods spaced a minimum of 3 m apart. If the resultant resistance exceeds 25 ohms measured not less than 48 hours after rainfall, the Government shall be notified immediately.

3.5.2 Grounding and Bonding Connections

Connections above grade shall be made by the fusion-welding process or with bolted solderless connectors, in compliance with UL 467, and those below grade shall be made by a fusion-welding process. Where grounding conductors are connected to aluminum-composition conductors, specially treated or lined copper-to-aluminum connectors suitable for this purpose shall be used.

3.5.3 Grounding and Bonding Conductors

Grounding and bonding conductors include conductors used to bond transformer enclosures and equipment frames to the grounding electrode system. Grounding and bonding conductors shall be sized as shown, and located to provide maximum physical protection. Bends greater than 45 degrees in ground conductors are not permitted. Routing of ground conductors through concrete shall be avoided. When concrete penetration is necessary, nonmetallic conduit shall be cast flush with the points of concrete entrance and exit so as to provide an opening for the ground conductor, and the opening shall be sealed with a suitable compound after installation.

3.5.4 Manhole, Handhole, or Concrete Pullbox Grounding

Ground rods installed in manholes, handholes, or concrete pullboxes shall be connected according to International Building Code requirements and ASTM standards.

3.5.5 Metal Splice Case Grounding

Metal splice cases for medium-voltage direct-burial cable shall be grounded by connection to a driven ground rod located within 600 mm of each splice box using a grounding electrode conductor having a current-carrying capacity of at least 20 percent of the individual phase conductors in the associated splice box, but not less than 16 square millimeters.

3.6 TESTS, INSPECTIONS, AND VERIFICATIONS

3.6.1 Inspection and Tests

Inspection and tests of wire and cable furnished under these specifications shall be made by and at the plant of the manufacturer, and shall be witnessed by the Government or his authorized representative, unless waived in writing. The Government may perform further tests before or after installation. Testing in general shall comply with NEMA WC 70. Specific tests required for particular materials, components, and completed cables shall be as specified in the sections of the above standards applicable to those materials, components, and cable types. Tests shall also be performed in accordance with the additional requirements specified below.

3.6.1.1 High-Voltage Test Source

Where the applicable standards allow a choice, high-voltage tests for cables to be used exclusively on dc circuits shall be made with dc test voltages. Cables to be used exclusively on ac circuits shall be tested with ac test voltages. If both ac and dc will be present, on either the same or separate conductors of the cable, ac test voltages shall be used.

3.7 ACCEPTANCE

Final acceptance of the facility will not be given until all defects in installation, material or operation have been corrected. Provide as-built drawings to Government at system acceptance.

-- End of Section --

SECTION 16402

INTERIOR DISTRIBUTION SYSTEM

PART 1 GENERAL

1.1 REFERENCES

The publications listed below form a part of this specification to the extent referenced. The publications are referred to in the text by the basic designation only.

AMERICAN NATIONAL STANDARDS INSTITUTE (ANSI)

ANSI C80.5	(1994) Aluminum Rigid Conduit (ARC)

ASTM INTERNATIONAL (ASTM)

ASTM B 1	(2001) Hard-Drawn Copper Wire
ASTM B 8	(2004) Concentric-Lay-Stranded Copper Conductors, Hard, Medium-Hard, or Soft
ASTM D 709	(2001) Laminated Thermosetting Materials

ELECTRONIC INDUSTRIES ALLIANCE (EIA)

EIA TIA/EIA-569-A	(1998; Addenda 2000, 2001) Commercial Building Standards for Telecommunications Pathways and Spaces (ANSI/TIA/EIA-569-A)
TIA J-STD-607-A	(2002) Commercial Building Grounding (Earthing) and Bonding Requirements for Telecommunications

INSTITUTE OF ELECTRICAL AND ELECTRONICS ENGINEERS (IEEE)

IEEE Std 100	(2000) The Authoritave Dictionary of IEEE Standards Terms

NATIONAL ELECTRICAL MANUFACTURERS ASSOCIATION (NEMA)

NEMA 250	(2003) Enclosures for Electrical Equipment (1000 Volts Maximum)
NEMA BU 1	(1999) Busways
NEMA C80.1	(1994) Rigid Steel Conduit - Zinc Coated (GRC)
NEMA C80.3	(1994) Electrical Metallic Tubing - Zinc Coated (EMT)
NEMA FU 1	(2002) Low Voltage Cartridge Fuses
NEMA ICS 1	(2000) Industrial Control and Systems: General Requirements

NEMA ICS 2	(2000; R 2004) Industrial Controls and Systems: Controllers, Contactors, and Overload Relays Rated Not More than 2000 Volts AC or 750 Volts DC
NEMA ICS 4	(2000) Industrial Control and Systems: Terminal Blocks
NEMA ICS 6	(1993; R 2001) Industrial Control and Systems: Enclosures
NEMA KS 1	(2001) Enclosed and Miscellaneous Distribution Equipment Switches (600 Volts Maximum)
NEMA MG 1	(2003; R 2004) Motors and Generators
NEMA MG 10	(2001) Energy Management Guide for Selection and Use of Fixed Frequency Medium AC Squirrel-Cage Polyphase Induction Motors
NEMA MG 11	(1977; R 1997; R 2001) Energy Management Guide for Selection and Use of Single Phase Motors
NEMA RN 1	(1998) Polyvinyl Chloride (PVC) Externally Coated Galvanized Rigid Steel Conduit and Intermediate Metal Conduit
NEMA ST 20	(1992; R 1997) Dry-Type Transformers for General Applications
NEMA TC 2	(2003) Electrical Polyvinyl Chloride (PVC) Tubing and Conduit
NEMA TC 3	(2004) Polyvinyl Chloride PVC Fittings for Use with Rigid PVC Conduit and Tubing
NEMA TP 1	(2002) Guide for Determining Energy Efficiency for Distribution Transformers
NEMA VE 1	(2002) Metal Cable Tray Systems
NEMA WD 1	(1999) General Color Requirements for Wiring Devices
NEMA WD 6	(2002) Wiring Devices - Dimensional Requirements
NEMA Z535.4	(2002) Product Safety Signs and Labels

NATIONAL FIRE PROTECTION ASSOCIATION (NFPA)

NFPA 70	(2005) National Electrical Code
NFPA 70E	(2004) Electrical Safety in the Workplace

U.S. NATIONAL ARCHIVES AND RECORDS ADMINISTRATION (NARA)

29 CFR 1910.147	Control of Hazardous Energy (Lock Out/Tag Out)

UNDERWRITERS LABORATORIES (UL)

UL 1	(2005) Flexible Metal Conduit
UL 1063	(1998; Rev thru Jun 2001) Machine-Tools Wires and Cables
UL 1242	(2000; Rev thru May 2003) Electrical Intermediate Metal Conduit -- Steel
UL 1449	(1996; Rev thru Jul 2002) Transient Voltage Surge Suppressors
UL 1561	(1999; Rev thru Feb 2004) Dry-Type General Purpose and Power Transformers
UL 1569	(1999; Rev thru Mar 2004) Metal-Clad Cables
UL 1660	(2004) Liquid-Tight Flexible Nonmetallic Conduit
UL 1699	(1999; Rev thru May 2003) Arc-Fault Circuit-Interrupters
UL 198C	(1986; Rev thru Feb 1998)High-Interrupting-Capacity Fuses, Current-Limiting Types
UL 198E	(1988; Rev Jul 1988) Class R Fuses
UL 198H	(1988; Rev thru Nov 1993) Class T Fuses
UL 20	(2000; Rev thru Jun 2002) General-Use Snap Switches
UL 360	(2003) Liquid-Tight Flexible Steel Conduits
UL 4	(2004) Armored Cable
UL 44	(1999; Rev thru May 2002) Thermoset-Insulated Wires and Cables
UL 467	(2004) Grounding and Bonding Equipment
UL 486A-486B	(2003; Rev thru Apr 2004) Wire Connectors
UL 486C	(2004) Splicing Wire Connectors
UL 489	(2002; Rev thru May 2003) Molded-Case Circuit Breakers, Molded-Case Switches, and Circuit-Breaker Enclosures
UL 498	(2001; Rev thru Oct 2002) Attachment Plugs and Receptacles

UL 5	(2004) Surface Metal Raceways and Fittings
UL 50	(1995; Rev thru Sep 2003) Enclosures for Electrical Equipment
UL 506	(2000; Rev thru Feb 2004) Specialty Transformers
UL 508	(1999; Rev thru Dec 2003) Industrial Control Equipment
UL 510	(2005) Polyvinyl Chloride, Polyethylene, and Rubber Insulating Tape
UL 512	(1993; Rev thru Mar 1999) Fuseholders
UL 514A	(2004) Metallic Outlet Boxes
UL 514B	(2004) Conduit, Tubing and Cable Fittings
UL 514C	(1996; Rev thru Nov 2002) Nonmetallic Outlet Boxes, Flush-Device Boxes, and Covers
UL 6	(2000; Rev thru May 2003) Rigid Metal Conduit
UL 651	(2000) Schedule 40 and 80 Rigid PVC Conduit
UL 67	(1993; Rev thru Nov 2003) Panelboards
UL 6A	(2000; Rev thru Jan 2004) Electrical Rigid Metal Conduit - Aluminum, Bronze, and Stainless Steel
UL 719	(2002; Rev thru May 2003) Nonmetallic-Sheathed Cables
UL 797	(2004) Electrical Metallic Tubing -- Steel
UL 817	(2001; Rev thru Jan 2004) Cord Sets and Power-Supply Cords
UL 83	(2003; Rev thru Mar 2004) Thermoplastic-Insulated Wires and Cables
UL 854	(2004) Service-Entrance Cables
UL 857	(2001; Rev thru Nov 2002) Busways
UL 869A	(1998) Reference Standard for Service Equipment
UL 870	(1995; Rev thru Jul 2003) Wireways, Auxiliary Gutters, and Associated Fittings
UL 943	(1993; Rev thru Feb 2004) Ground-Fault Circuit-Interrupters

UL 984 (1996) Hermetic Refrigerant Motor-Compressors

1.2 DEFINITIONS

Unless otherwise specified or indicated, electrical and electronics terms used in these specifications, and on the drawings, shall be as defined in IEEE Std 100.

1.3 SUBMITTALS

Government approval is required for submittals with a "G" designation; submittals not having a "G" designation are for information only. When used, a designation following the "G" designation identifies the office that will review the submittal for the Government. The following shall be submitted in accordance with Section 01330 SUBMITTAL PROCEDURES:

SD-02 Shop Drawings

Panelboards; G RE

Transformers; G RE

Busway; G RE

Cable trays; G RE

Motor control centers; G RE

Include wiring diagrams and installation details of equipment indicating proposed location, layout and arrangement, control panels, accessories, piping, ductwork, and other items that must be shown to ensure a coordinated installation. Wiring diagrams shall identify circuit terminals and indicate the internal wiring for each item of equipment and the interconnection between each item of equipment. Drawings shall indicate adequate clearance for operation, maintenance, and replacement of operating equipment devices.

Wireways; G RE

SD-03 Product Data

Receptacles; G RE

Circuit breakers; G RE

Switches; G RE

Transformers; G RE

Enclosed circuit breakers; G RE

Motor controllers; G RE

Combination motor controllers; G RE

Manual motor starters; G RE

Metering; G RE

CATV outlets; G RE

Telecommunications Grounding Busbar; G RE

Surge protective devices; G RE

Submittals shall include performance and characteristic curves.

SD-06 Test Reports

600-volt wiring test; G RE

Grounding system test; G RE

Transformer tests; G RE

Ground-fault receptacle test; G RE

SD-07 Certificates

Fuses; G RE

SD-09 Manufacturer's Field Reports

Transformer factory tests

]1.4 QUALITY ASSURANCE

1.4.1 Fuses

Submit coordination data as specified in paragraph, FUSES of this section.

1.4.2 Regulatory Requirements

In each of the publications referred to herein, consider the advisory provisions to be mandatory, as though the word, "shall" had been substituted for "should" wherever it appears. Interpret references in these publications to the "authority having jurisdiction," or words of similar meaning, to mean the Contracting Officer. Equipment, materials, installation, and workmanship shall be in accordance with the mandatory and advisory provisions of NFPA 70 unless more stringent requirements are specified or indicated.

1.4.3 Standard Products

Provide materials and equipment that are products of manufacturers regularly engaged in the production of such products which are of equal material, design and workmanship. Products shall have been in satisfactory commercial or industrial use for 2 years prior to bid opening. The 2-year period shall include applications of equipment and materials under similar circumstances and of similar size. The product shall have been on sale on the commercial market through advertisements, manufacturers' catalogs, or brochures during the 2-year period. Where two or more items of the same class of equipment are required, these items shall be products of a single manufacturer; however, the component parts of the item need not be the products of the same manufacturer unless stated in this section.

1.4.3.1 Alternative Qualifications

Products having less than a 2-year field service record will be acceptable if a certified record of satisfactory field operation for not less than 6000 hours, exclusive of the manufacturers' factory or laboratory tests, is furnished.

1.4.3.2 Material and Equipment Manufacturing Date

Products manufactured more than 3 years prior to date of delivery to site shall not be used, unless specified otherwise.

1.5 MAINTENANCE

1.5.1 Electrical Systems

Submit operation and maintenance manuals for electrical systems that provide basic data relating to the design, operation, and maintenance of the electrical distribution system for the building. This shall include:

a. Single line diagram of the "as-built" building electrical system.

b. Schematic diagram of electrical control system (other than HVAC, covered elsewhere).

c. Manufacturers' operating and maintenance manuals on active electrical equipment.

1.6 WARRANTY

The equipment items shall be supported by service organizations which are reasonably convenient to the equipment installation in order to render satisfactory service to the equipment on a regular and emergency basis during the warranty period of the contract.

1.7 SEISMIC REQUIREMENTS

Seismic details shall conform to Section 13080, SEISMIC PROTECTION FOR MISCELLANEOUS EQUIPMENT and to Section 16070, SEISMIC PROTECTION FOR ELECTRICAL EQUIPMENT].

PART 2 PRODUCTS

2.1 MATERIALS AND EQUIPMENT

Materials, equipment, and devices shall, as a minimum, meet requirements of UL, where UL standards are established for those items, and requirements of NFPA 70.

2.2 CONDUIT AND FITTINGS

Shall conform to the following:

2.2.1 Rigid Metallic Conduit

2.2.1.1 Rigid, Threaded Zinc-Coated Steel Conduit

NEMA C80.1, UL 6.

2.2.1.2 Rigid Aluminum Conduit

ANSI C80.5, UL 6A.

2.2.2 Rigid Nonmetallic Conduit

PVC Type EPC-40, and EPC-80 in accordance with NEMA TC 2,UL 651.

2.2.3 Intermediate Metal Conduit (IMC)

UL 1242, zinc-coated steel only.

2.2.4 Electrical, Zinc-Coated Steel Metallic Tubing (EMT)

UL 797, NEMA C80.3.

2.2.5 Plastic-Coated Rigid Steel and IMC Conduit

NEMA RN 1, Type 40(one millimeter (40 mils) thick).

2.2.6 Flexible Metal Conduit

UL 1.

2.2.6.1 Liquid-Tight Flexible Metal Conduit, Steel

UL 360.

2.2.7 Fittings for Metal Conduit, EMT, and Flexible Metal Conduit

UL 514B. Ferrous fittings shall be cadmium- or zinc-coated in accordance with UL 514B.

2.2.7.1 Fittings for Rigid Metal Conduit and IMC

Threaded-type. Split couplings unacceptable.

2.2.7.2 Fittings for EMT

Steel compression type.

2.2.8 Fittings for Rigid Nonmetallic Conduit

NEMA TC 3 for PVC, and UL 514B.

2.2.9 Liquid-Tight Flexible Nonmetallic Conduit

UL 1660.

2.3 SURFACE RACEWAY

2.3.1 Surface Metal Raceway

UL 5, two-piece painted steel, totally enclosed, snap-cover type. Provide multiple outlet-type raceway with grounding-type receptacle where indicated.

2.3.2 Surface Nonmetallic Raceway

Provide multiple outlet-type raceway with grounding-type receptacle where indicated.

2.4 BUSWAY

NEMA BU 1, UL 857. Buses shall be copper. Busways shall be rated as shown on contract drawing. Short circuit rating shall be as indicated. Busway systems shall be suitable for use indoors. Enclosures shall be steel. Hardware shall be plated or otherwise protected to resist corrosion. Joints shall be one-bolt type with through-bolts, which can be checked for tightness without deenergizing system. Maximum hot spot temperature rise at any point in busway at continuous rated load shall not exceed 55 degrees C above maximum ambient temperature of 40 degrees C in any position. Provide internal barriers to prevent movement of superheated gases. Contractor shall coordinate proper voltage phasing of entire bus duct system, for example where busway interfaces with transformers, switchgear, switchboards, motor control centers, and other system components.

2.4.1 Feeder Busways

Provide ventilated, except that vertical busways within 1830 mm of floors shall be unventilated, low-impedance busway. Bus bars shall be fully covered with insulating material, except at stabs. Entire busway system shall be polarized.

2.5 CABLE TRAYS, COMMUNICATION SYSTEMS

NEMA VE 1. Cable trays shall form a wireway system, and shall be sized in accordance with the drawings. Cable trays shall be constructed of steel that has been zinc-coated after fabrication. Trays shall include splice and end plates, dropouts, and miscellaneous hardware. Edges, fittings, and hardware shall be finished free from burrs and sharp edges. Fittings shall have not less than load-carrying ability of straight tray sections and shall have manufacturer's minimum standard radius.

2.5.1 Ladder-Type Cable Trays

Provide size as indicated on the drawings.

2.5.2 Solid Bottom-Type Cable Trays

Provide size as indicated on the drawings. Solid covers shall not be provided. Cable tray shall be connected to the outlets via conduit sized in accordance with the drawings.

2.6 OUTLET BOXES AND COVERS

UL 514A, cadmium- or zinc-coated, if ferrous metal. UL 514C, if nonmetallic.

2.6.1 Floor Outlet Boxes

Boxes shall be adjustable and concrete tight. Each outlet shall consist of cast-metal body with threaded openings, or sheet-steel body with knockouts for conduits, adjustable brass flange, and cover plate with 25 mm threaded plug. Telecommunications outlets shall consist of surface-mounted, horizontal or flush stainless steel housing with a receptacle as specified

and 25 mm top opening. Receptacle outlets shall consist of surface-mounted, horizontal or flush stainless steel housing with duplex-type receptacle. Provide gaskets where necessary to ensure watertight installation.

2.6.2 Outlet Boxes for Telecommunications System

Provide standard type 120 mm square by 54 mm deep. Outlet boxes for wall-mounted telecommunications outlets shall be 120 mm square by 54 mm deep. Outlet boxes shall include a minimum 10 mm deep plaster ring installed. Conduit sizes shall be installed in accordance with the drawings.

2.7 CABINETS, JUNCTION BOXES, AND PULL BOXES

Volume greater than 1640 mL, UL 50, hot-dip, zinc-coated, if sheet steel.

2.8 WIRES AND CABLES

Wires and cables shall meet applicable requirements of NFPA 70 and UL for type of insulation, jacket, and conductor specified or indicated. Wires and cables manufactured more than 12 months prior to date of delivery to site shall not be used.

2.8.1 Conductors

Conductors 10 mm square (8 AWG) and larger diameter shall be stranded. Conductors 6 mm square and smaller diameter shall be solid, except that conductors for remote control, alarm, and signal circuits, classes 1, 2, and 3, shall be stranded unless specifically indicated otherwise. Conductor sizes and ampacities shown are based on copper, unless indicated otherwise. All conductors shall be copper.

2.8.1.1 Equipment Manufacturer Requirements

When manufacturer's equipment requires copper conductors at the terminations or requires copper conductors to be provided between components of equipment, provide copper conductors or splices, splice boxes, and other work required to satisfy manufacturer's requirements.

2.8.1.2 Minimum Conductor Sizes

Minimum size for branch circuits shall be 4 mm square (12 AWG); for Class 1 remote-control and signal circuits, 2.5 mm square (14 AWG); for Class 2 low-energy, remote-control and signal circuits, 1.5 mm square (AWG); and for Class 3 low-energy, remote-control, alarm and signal circuits, 1.5 mm square AWG.

2.8.2 Color Coding

Provide for service, feeder, branch, control, and signaling circuit conductors. Color shall be green for grounding conductors and white for neutrals; except where neutrals of more than one system are installed in same raceway or box, other neutrals shall be white with a different colored (not green) stripe for each. Color of ungrounded conductors in different voltage systems shall be as follows:

a. 380/220 volt, three-phase

(1) Phase A - black

(2) Phase B - red

(3) Phase C - blue

b. 220/240 volt, single phase: Black and red

c. On three-phase, four-wire delta system, high leg shall be orange, as required by NFPA 70.

2.8.3 Insulation

Unless specified or indicated otherwise or required by NFPA 70, power and lighting wires shall be 600-volt, Type THWN/THHN conforming to UL 83 or Type XHHW or RHW conforming to UL 44, except that grounding wire may be type TW conforming to UL 83; remote-control and signal circuits shall be Type TW or TF, conforming to UL 83. Where lighting fixtures require 90-degree Centigrade (C) conductors, provide only conductors with 90-degree C insulation or better.

2.8.4 Bonding Conductors

ASTM B 1, solid bare copper wire for sizes 10 mm square (8 AWG) and smaller diameter; ASTM B 8, Class B, stranded bare copper wire for sizes 16 mm square AWG and larger diameter.

2.8.4.1 Telecommunications Bonding Backbone (TBB)

Provide a copper conductor TBB in accordance with TIA J-STD-607-A. The TBB shall be a minimum No. 6 AWG and be sized at 2 kcmil per linear foot of conductor length up to a maximum size of 3/0 AWG.

2.8.4.2 Bonding Conductor for Telecommunications

Provide a copper conductor Bonding Conductor for Telecommunications between the telecommunications main grounding busbar (TMGB) and the electrical service ground in accordance with TIA J-STD-607-A. The bonding conductor for telecommunications shall be sized the same as the TBB.

2.8.5 Service Entrance Cables

Service Entrance (SE) and Underground Service Entrance (USE) Cables, UL 854.

2.8.6 Nonmetallic Sheathed Cable

UL 719, Type NM or NMC.

2.8.7 Wire and Cable for 400 Hertz (Hz) Circuits

Insulated copper conductors.

2.8.8 Metal-Clad Cable

UL 1569; NFPA 70, Type MC cable.

2.8.9 Armored Cable

UL 4; NFPA 70, Type AC cable.

2.8.10 Mineral-Insulated, Metal-Sheathed Cable

UL listed; NFPA 70, Type MI cable. Sheathing containing asbestos fibers shall not be used.

2.8.11 Flat Conductor Cable

UL listed; NFPA 70, Type FCC.

2.8.12 Cable Tray Cable or Power Limited Tray Cable

UL listed; type TC or PLTC.

2.8.13 Cord Sets and Power-Supply Cords

UL 817.

2.9 SPLICES AND TERMINATION COMPONENTS

UL 486A-486B for wire connectors and UL 510 for insulating tapes. Connectors for 6 mm square (10 AWG) and smaller diameter wires shall be insulated, pressure-type in accordance with UL 486A-486B or UL 486C (twist-on splicing connector). Provide solderless terminal lugs on stranded conductors.

2.10 DEVICE PLATES

Provide UL listed, one-piece device plates for outlets to suit the devices installed. For metal outlet boxes, plates on unfinished walls shall be of zinc-coated sheet steel or cast metal having round or beveled edges. For nonmetallic boxes and fittings, other suitable plates may be provided. Plates on finished walls shall be satin finish stainless steel or brushed-finish aluminum, minimum 0.792 mm thick. Screws shall be machine-type with countersunk heads in color to match finish of plate. Sectional type device plates will not be permitted. Plates installed in wet locations shall be gasketed and UL listed for "wet locations." Device plates in areas normally accessible to prisoners shall be brown or ivory finish nylon-device plates rated for high abuse. Test device plates for compliance with UL 514A and UL 514C for physical strength. Attach device plates with spanner head bolts.

2.11 SWITCHES

2.11.1 Toggle Switches

NEMA WD 1, UL 20, single pole, double pole, three-way, and four-way, totally enclosed with bodies of thermoplastic or thermoset plastic and mounting strap with grounding screw. Handles shall be ivory thermoplastic. Wiring terminals shall be screw-type, side-wired or of the solderless pressure type having suitable conductor-release arrangement. Contacts shall be silver-cadmium and contact arm shall be one-piece copper alloy. Switches shall be rated quiet-type ac only, 120/277 volts, with current rating and number of poles indicated.

2.11.2 Switch with Red Pilot Handle

NEMA WD 1. Provide pilot lights that are integrally constructed as a part of the switch's handle. The pilot light shall be red and shall illuminate

whenever the switch is closed or "on". The pilot lighted switch shall be rated 20 amps and 220 volts or 277 volts as indicated. Provide the circuit's neutral conductor to each switch with a pilot light.

2.11.3 Breakers Used as Switches

For 220-Volt fluorescent fixtures, mark breakers "SWD" in accordance with UL 489.

2.11.4 Disconnect Switches

NEMA KS 1. Provide heavy duty-type switches where indicated, where switches are rated higher than 240 volts, and for double-throw switches. Fused switches shall utilize Class R fuseholders and fuses, unless indicated otherwise. Switches serving as motor-disconnect means shall be horsepower rated. Provide switches in NEMA 6, enclosure as indicated per NEMA ICS 6.

2.12 FUSES

NEMA FU 1. Provide complete set of fuses for each fusible switch panel and control center. Time-current characteristics curves of fuses serving motors or connected in series with circuit breakers or other circuit protective devices shall be coordinated for proper operation. Submit coordination data for approval. Fuses shall have voltage rating not less than circuit voltage.

2.12.1 Fuseholders

Provide in accordance with UL 512.

2.12.2 Cartridge Fuses, Current Limiting Type (Class R)

UL 198E, Class RK-1 or RK-5 time-delay type as recommended by equipment manufacturer. Associated fuseholders shall be Class R only.

2.12.3 Cartridge Fuses, High-Interrupting Capacity, Current Limiting Type (Classes J, L, and CC)

UL 198C, Class J for zero to 600 amperes, Class L for 601 to 6,000 amperes, and Class CC for zero to 30 amperes.

2.12.4 Cartridge Fuses, Current Limiting Type (Class T)

UL 198H, Class T for zero to 1,200 amperes, 300 volts; and zero to 800 amperes, 600 volts.

2.13 RECEPTACLES

UL 498, hard use, heavy-duty, UL 498, hospital grade, grounding-type. Ratings and configurations shall be as indicated. Bodies shall be of ivory as per NEMA WD 1. Face and body shall be thermoplastic supported on a metal mounting strap. Dimensional requirements shall be per NEMA WD 6. Provide screw-type, side-wired wiring terminals or of the solderless pressure type having suitable conductor-release arrangement. Connect grounding pole to mounting strap. The receptacle shall contain triple-wipe power contacts and double or triple-wipe ground contacts.

2.13.1 Switched Duplex Receptacles

Provide separate terminals for each ungrounded pole. Top receptacle shall be switched when installed.

2.13.2 Weatherproof Receptacles

Provide in cast metal box with gasketed, weatherproof, cast-metal cover plate and gasketed cap over each receptacle opening. Provide caps with a spring-hinged flap. Receptacle shall be UL listed for use in "wet locations with plug in use."

2.13.3 Ground-Fault Circuit Interrupter Receptacles

UL 943, duplex type for mounting in standard outlet box. Device shall be capable of detecting current leak of 6 milliamperes or greater and tripping per requirements of UL 943 for Class A GFCI and GFI devices. Provide screw-type, side-wired wiring terminals or pre-wired (pigtail) leads.

2.13.4 Special Purpose Receptacles

Provide in ratings indicated.

2.13.5 Plugs

Provide heavy-duty, rubber-covered three-, or four-,wire cord as required for all Contractor furnished appliances and equipment of required size, install plugs thereon, and attach to equipment. Plugs shall be UL listed with receptacles, complete with grounding blades. Where equipment is not available, turn over plugs and cord assemblies to the Government.

2.13.6 Range Receptacles

NEMA 14-50 configuration, flush mounted for housing units, rated 50 amperes, 220 volts. Furnish one matching plug with each receptacle.

2.13.7 Dryer Receptacles

NEMA 14-30 configuration, rated 30 amperes, 220 volts. Furnish one matching plug with each receptacle.

2.14 PANELBOARDS

UL 67 and UL 50 having a short-circuit current rating as indicated. Panelboards for use as service disconnecting means shall additionally conform to UL 869A. Panelboards shall be circuit breaker-equipped. Design shall be such that individual breakers can be removed without disturbing adjacent units or without loosening or removing supplemental insulation supplied as means of obtaining clearances as required by UL. "Specific breaker placement" is required in panelboards to match the breaker placement indicated in the panelboard schedule on the drawings. Use of "Subfeed Breakers" is not acceptable unless specifically indicated otherwise. Main breaker shall be "separately" mounted "above" or "below" branch breakers. Where "space only" is indicated, make provisions for future installation of breakers. Directories shall indicate load served by each circuit in panelboard. Directories shall also indicate source of service to panelboard (e.g., Panel PA served from Panel MDP). Type directories and mount in holder behind transparent protective covering. Panelboards shall be listed and labeled for their intended use. Panelboard

shall have nameplates in accordance with paragraph FIELD FABRICATED NAMEPLATES.

UL 67 and UL 50. Panelboards for use as service disconnecting means shall additionally conform to UL 869A. Panelboards shall be circuit breaker-equipped. Design shall be such that individual breakers can be removed without disturbing adjacent units or without loosening or removing supplemental insulation supplied as means of obtaining clearances as required by UL. Where "space only" is indicated, make provisions for future installation of breaker sized as indicated. Directories shall indicate load served by each circuit of panelboard. Directories shall also indicate source of service (upstream panel, switchboard, motor control center, etc.) to panelboard. Type directories and mount in holder behind transparent protective covering. Panelboard shall have nameplates in accordance with paragraph FIELD FABRICATED NAMEPLATES.

2.14.1 Enclosure

Enclosures shall meet the requirements of UL 50. All cabinets shall be fabricated from sheet steel of not less than 3.5 millimeters (No. 10 gauge if flush-mounted or mounted outdoors, and not less than 2.7 millimeters (No. 12 gauge) if surface-mounted indoors, with full seam-welded box ends. Cabinets mounted outdoors or flush-mounted shall be hot-dipped galvanized after fabrication. Cabinets shall be painted in accordance with paragraph PAINTING. Outdoor cabinets shall be of NEMA 3R raintight with conduit hubs welded to the cabinet][a removable steel plate 7 millimeters (1/4 inch) thick in the bottom for field drilling for conduit connections. Front edges of cabinets shall be form-flanged or fitted with structural shapes welded or riveted to the sheet steel, for supporting the panelboard front. All cabinets shall be so fabricated that no part of any surface on the finished cabinet shall deviate from a true plane by more than 3 millimeters (1/8 inch). Holes shall be provided in the back of indoor surface-mounted cabinets, with outside spacers and inside stiffeners, for mounting the cabinets with a 15 millimeter (1/2 inch) clear space between the back of the cabinet and the wall surface. Flush doors shall be mounted on hinges that expose only the hinge roll to view when the door is closed. Each door shall be fitted with a combined catch and lock, except that doors over 600 millimeters (24 inches) long shall be provided with a three-point latch having a knob with a T-handle, and a cylinder lock. Two keys shall be provided with each lock, and all locks shall be keyed alike. Finished-head cap screws shall be provided for mounting the panelboard fronts on the cabinets.

2.14.2 Panelboard Buses

Support bus bars on bases independent of circuit breakers. Main buses and back pans shall be designed so that breakers may be changed without machining, drilling, or tapping. Provide isolated neutral bus in each panel for connection of circuit neutral conductors. Provide separate ground bus identified as equipment grounding bus per UL 67 for connecting grounding conductors; bond to steel cabinet. In addition to equipment grounding bus, provide second "isolated" ground bus, where indicated.

2.14.2.1 Panelboard Neutrals for Non-Linear Loads

UL listed, and panelboard type shall have been specifically UL heat rise tested for use on non-linear loads. Panelboard shall be heat rise tested in accordance with UL 67, except with the neutral assembly installed and carrying 200 percent of the phase bus current during testing. Verification

of the testing procedure shall be provided upon request. Two neutral assemblies paralleled together with cable is not acceptable. Nameplates for panelboard rated for use on non-linear loads shall be marked "SUITABLE FOR NON-LINEAR LOADS"and shall be in accordance with paragraph FIELD FABRICATED NAMEPLATES. Provide a neutral label with instructions for wiring the neutral of panelboards rated for use on non-linear loads.

2.14.3 Circuit Breakers

UL 489, thermal magnetic-type having a minimum short-circuit current rating equal to the short-circuit current rating of the panelboard in which the circuit breaker shall be mounted. Breaker terminals shall be UL listed as suitable for type of conductor provided. Where indicated on the drawings, provide circuit breakers with shunt trip devices. Series rated circuit breakers and plug-in circuit breakers without a self-contained bracket and not secured by a positive locking device requiring mechanical release for removal are unacceptable. Series rated circuit breakers and plug-in circuit breakers are unacceptable.

2.14.3.1 Multipole Breakers

Provide common trip-type with single operating handle. Breaker design shall be such that overload in one pole automatically causes all poles to open. Maintain phase sequence throughout each panel so that any three adjacent breaker poles are connected to Phases A, B, and C, respectively.

2.14.3.2 Circuit Breaker With GFCIor GFI

UL 943 and NFPA 70. Provide with "push-to-test" button, visible indication of tripped condition, and ability to detect and trip on current imbalance of 6 milliamperes or greater per requirements of UL 943 for Class A GFCIor GFI devices, for personnel protection, and 20 milliamperes or greater per requirements of UL 943 for Class B GFCI or GFI per equipment protection as indicated.

2.14.3.3 Circuit Breakers for HVAC Equipment

Circuit breakers for HVAC equipment having motors (group or individual) shall be marked for use with HACR type and UL listed as HACR type.

2.14.3.4 Arc-Fault Circuit-Interrupters

UL 489, UL 1699 and NFPA 70. Molded case circuit breaker shall be rated as indicated. Two pole arc-fault circuit-interrupters shall be rated 220 volts. The provision of (two) one pole circuit breakers for shared neutral circuits in lieu of (one) two pole circuit breaker is unacceptable. Provide with "push-to-test" button.

2.15 LOAD CENTERS FOR HOUSING UNITS

2.15.1 Panelboard Buses

Support bus bars on bases independent of circuit breakers. Main buses and back pans shall be designed so that breakers may be changed without machining, drilling, or tapping. Bus bars shall be copper or aluminum, and shall be tin plated or silver plated. Provide isolated neutral bus in each panel for connection of circuit neutral conductors. Provide separate ground bus identified as equipment grounding bus per UL 67 for connecting

grounding conductors; bond to steel cabinet.

2.15.2 Circuit Breakers

UL 489 thermal magnetic type having a minimum short-circuit current rating equal to the short-circuit current rating of the panelboard in which the circuit breaker will be mounted. Breaker terminals shall be UL listed as suitable for type of conductor provided. Half-size and tandem breakers are not acceptable. 15 and 20 ampere breakers shall be switch duty rated. Breakers shall not require use of panel trim to secure them to the bus.

2.15.2.1 Multipole Breakers

Provide common trip-type with single operating handle. Breaker design shall be such that overload in one pole automatically causes all poles to open. Maintain phase sequence throughout each panel so that any two adjacent breaker poles are connected to Phases A and B respectively.

2.15.2.2 Arc-Fault Circuit-Interrupters

UL 489, UL 1699 and NFPA 70. Molded case circuit breaker shall be rated as indicated. Two pole arc-fault circuit-interrupters shall be rated 220 volts. The provision of (two) one pole circuit breakers for shared neutral circuits in lieu of (one) two pole circuit breaker is unacceptable. Provide with "push-to-test" button.

2.16 ENCLOSED CIRCUIT BREAKERS

UL 489. Individual molded case circuit breakers with voltage and continuous current ratings, number of poles, overload trip setting, and short circuit current interrupting rating as indicated.

2.17 MOTOR SHORT-CIRCUIT PROTECTOR (MSCP)

Motor short-circuit protectors, also called motor circuit protectors (MCPs); shall conform to UL 508 and UL 489 and shall be provided as shown. MSCPs shall consist of an adjustable instantaneous trip circuit breaker used only in conjunction with a combination motor controller which provides coordinated motor branch-circuit overload and short-circuit protection. MSCPs shall be rated in accordance with the requirements of NFPA 70.

2.18 TRANSFORMERS

NEMA ST 20, general purpose, dry-type, self-cooled, ventilated. Provide transformers in NEMA 1 enclosure. Transformer shall have 220 degrees C insulation system for transformers 15 kVA and greater, and shall have 180 degrees C insulation for transformers rated 10 kVA and less, with temperature rise not exceeding120 degrees C under full-rated load in maximum ambient of 40 degrees C. Transformer of 120 degrees C temperature rise shall be capable of carrying continuously 100 percent of nameplate kVA without exceeding insulation rating.

2.18.1 Specified Transformer Efficiency

Transformers, indicated and specified with: 480V primary, 80 degrees C or 115 degrees C temperature rise, kVA ratings of 37.5 to 100 for single phase or 30 to 500 for three phase, shall be energy efficient type. Minimum efficiency, based on factory test results, shall not be less than NEMA Class 1 efficiency as defined by NEMA TP 1.

2.18.2 Transformers With Non-Linear Loads

Transformer insulation shall be a UL recognized 220 degrees C system. Neither the primary nor the secondary temperature shall exceed 220 degrees C at any point in the coils while carrying their full rating of non-sinusoidal load. Transformers are to be UL listed and labeled in accordance with UL 1561. Transformers evaluated by the UL K-Factor evaluation shall be listed for 115 degrees C average temperature rise only. Transformers with K-Factor ratings with temperature rise of 150 degrees C rise shall not be acceptable. K-Factor rated transformers shall have an impedance range of 3 percent to 5 percent, and shall have a minimum reactance of 2 percent to prevent excessive neutral current when supplying loads with large amounts of third harmonic.

]2.19 MOTORS

NEMA MG 1; hermetic-type sealed motor compressors shall also comply with UL 984. Provide the size in terms of kW, or kVA, or full-load current, or a combination of these characteristics, and other characteristics, of each motor as indicated or specified. Determine specific motor characteristics to ensure provision of correctly sized starters and overload heaters. Motors for operation on 208-volt, 3-phase circuits shall have terminal voltage rating of 200 volts, and those for operation on 480-volt, 3-phase circuits shall have terminal voltage rating of 460 volts. Motors shall be designed to operate at full capacity with voltage variation of plus or minus 10 percent of motor voltage rating. Unless otherwise indicated, motors rated 745 Watts (1 HP) and above shall be continuous duty type.

Where fuse protection is specifically recommended by the equipment manufacturer, provide fused switches in lieu of non-fused switches indicated.

2.19.1 High Efficiency Single-Phase Motors

Single-phase fractional-horsepower alternating-current motors shall be high efficiency types corresponding to the applications listed in NEMA MG 11. In exception, for motor-driven equipment with a minimum seasonal or overall efficiency rating, such as a SEER rating, provide equipment with motor to meet the overall system rating indicated.

2.19.2 Premium Efficiency Polyphase Motors

Polyphase motors shall be selected based on high efficiency characteristics relative to typical characteristics and applications as listed in NEMA MG 10. In addition, continuous rated, polyphase squirrel-cage medium induction motors shall meet the requirements for premium efficiency electric motors in accordance with NEMA MG 1, including the NEMA full load efficiency ratings. In exception, for motor-driven equipment with a minimum seasonal or overall efficiency rating, such as a SEER rating, provide equipment with motor to meet the overall system rating indicated.

2.19.3 Motor Sizes

Provide size for duty to be performed, not exceeding the full-load nameplate current rating when driven equipment is operated at specified capacity under most severe conditions likely to be encountered. When motor size provided differs from size indicated or specified, make adjustments to wiring, disconnect devices, and branch circuit protection to accommodate

equipment actually provided. Provide controllers for motors rated 1-hp and above with electronic phase-voltage monitors designed to protect motors from phase-loss, undervoltage, and overvoltage. Provide protection for motors from immediate restart by a time adjustable restart relay.

2.19.4 Wiring and Conduit

Provide internal wiring for components of packaged equipment as an integral part of the equipment. Provide power wiring and conduit for field-installed equipment, and motor control equipment forming part of motor control centers or switchgear assemblies, the conduit and wiring connecting such centers, assemblies, or other power sources to equipment as specified herein. Power wiring and conduit shall conform to the requirements specified herein. Control wiring shall be provided under, and conform to the requirements of the section specifying the associated equipment.

2.20 MOTOR CONTROLLERS

UL 508, NEMA ICS 1, and NEMA ICS 2. Controllers shall have thermal overload protection in each phase and shall have one spare normally open and one spare normally closed auxiliary contact. Provide controllers for motors rated 1-hp and above with electronic phase-voltage monitors designed to protect motors from phase-loss, undervoltage, and overvoltage. Provide protection for motors from immediate restart by a time adjustable restart relay. Magnetic-type motor controllers shall have undervoltage protection when used with momentary-contact pushbutton stations or switches and shall have undervoltage release when used with maintained-contact pushbutton stations or switches. When used with pressure, float, or similar automatic-type or maintained-contact switch, controller shall have hand/off/automatic selector switch. Connections to selector switch shall be such that only normal automatic regulatory control devices are bypassed when switch is in "hand" position. Safety control devices, such as low and high pressure cutouts, high temperature cutouts, and motor overload protective devices, shall be connected in motor control circuit in "hand" and "automatic" positions. Control circuit connections to hand/off/automatic selector switch or to more than one automatic regulatory control device shall be made in accordance with indicated or manufacturer's approved wiring diagram. Selector switch shall have means for locking in any position. For each motor not in sight of controller or where controller disconnecting means is not in sight of motor location and driven machinery location, controller disconnecting means shall be capable of being locked in open position. As an alternative, provide a manually operated, lockable, nonfused switch which disconnects motor from supply source within sight of motor. Overload protective devices shall provide adequate protection to motor windings; be thermal inverse-time-limit type; and include manual reset-type pushbutton on outside of motor controller case. Cover of combination motor controller and manual switch or circuit breaker shall be interlocked with operating handle of switch or circuit breaker so that cover cannot be opened unless handle of switch or circuit breaker is in "off" position.

2.20.1 Control Wiring

All control wire shall be stranded tinned copper switchboard wire with 600-volt flame-retardant insulation Type SIS meeting UL 44, or Type MTW meeting UL 1063, and shall pass the VW-1 flame tests included in those standards. Hinge wire shall have Class K stranding. Current transformer secondary leads shall be not smaller than No. 10 AWG. The minimum size of

control wire shall be No. 14 AWG. Power wiring for 480-volt circuits and below shall be of the same type as control wiring and the minimum size shall be No. 12 AWG. Special attention shall be given to wiring and terminal arrangement on the terminal blocks to permit the individual conductors of each external cable to be terminated on adjacent terminal points.

2.20.2 Control Circuit Terminal Blocks

NEMA ICS 4. Control circuit terminal blocks for control wiring shall be molded or fabricated type with barriers, rated not less than 600 volts. The terminals shall be removable binding, fillister or washer head screw type, or of the stud type with contact and locking nuts. The terminals shall be not less than No. 10 in size and shall have sufficient length and space for connecting at least two indented terminals for 10 AWG conductors to each terminal. The terminal arrangement shall be subject to the approval of the Contracting Officer and not less than four (4) spare terminals or 10 percent, whichever is greater, shall be provided on each block or group of blocks. Modular, pull apart, terminal blocks will be acceptable provided they are of the channel or rail-mounted type. The Contractor shall submit data showing that the proposed alternate will accommodate the specified number of wires, are of adequate current-carrying capacity, and are constructed to assure positive contact between current-carrying parts.

2.20.2.1 Types of Terminal Blocks

a. Short-Circuiting Type: Short-circuiting type terminal blocks shall be furnished for all current transformer secondary leads and shall have provision for shorting together all leads from each current transformer without first opening any circuit. Terminal blocks shall meet the requirements of paragraph CONTROL CIRCUIT TERMINAL BLOCKS above.

b. Load Type: Load terminal blocks rated not less than 600 volts and of adequate capacity shall be provided for the conductors for NEMA Size 3 and smaller motor controllers and for other power circuits, except those for feeder tap units. The terminals shall be of either the stud type with contact nuts and locking nuts or of the removable screw type, having length and space for at least two indented terminals of the size required on the conductors to be terminated. For conductors rated more than 50 amperes, screws shall have hexagonal heads. Conducting parts between connected terminals shall have adequate contact surface and cross-section to operate without overheating. Each connected terminal shall have the circuit designation or wire number placed on or near the terminal in permanent contrasting color.

2.20.3 Control Circuits

Control circuits shall have maximum voltage of 220 volts derived from control transformer in same enclosure. Transformers shall conform to UL 506, as applicable. Transformers, other than transformers in bridge circuits, shall have primaries wound for voltage available and secondaries wound for correct control circuit voltage. Size transformers so that 80 percent of rated capacity equals connected load. Provide disconnect switch on primary side.

2.20.4 Enclosures for Motor Controllers

NEMA ICS 6.

2.20.5 Multiple-Speed Motor Controllers and Reversible Motor Controllers

Across-the-line-type, electrically and mechanically interlocked. Multiple-speed controllers shall have compelling relays and shall be multiple-button, station-type with pilot lights for each speed.

2.20.6 Pushbutton Stations

Provide with "start/stop" momentary contacts having one normally open and one normally closed set of contacts, and red lights to indicate when motor is running. Stations shall be heavy duty, oil-tight design.

2.20.7 Pilot and Indicating Lights

Provide LED cluster lamps.

2.21 LOCKOUT REQUIREMENTS

Provide disconnecting means capable of being locked out for machines and other equipment to prevent unexpected startup or release of stored energy in accordance with 29 CFR 1910.147. Mechanical isolation of machines and other equipment shall be in accordance with requirements of Division 15, "Mechanical."

2.22 TELECOMMUNICATIONS SYSTEM

Provide system of telecommunications wire-supporting structures (pathway), including: outlet boxes, conduits with pull wires wireways, cable trays, and other accessories for telecommunications outlets and pathway in accordance with EIA TIA/EIA-569-A and as specified herein. Additional telecommunications requirements are specified in Section 16710, BUILDING TELECOMMUNICATIONS CABLING SYSTEM.

2.23 GROUNDING AND BONDING EQUIPMENT

2.23.1 Ground Rods

UL 467. Ground rods shall be copper-clad steel, with minimum diameter of 20 mm and minimum length of 3m.

2.23.2 Ground Bus

A copper ground bus shall be provided in the electrical equipment rooms as indicated.

2.24 MANUFACTURER'S NAMEPLATE

Each item of equipment shall have a nameplate bearing the manufacturer's name, address, model number, and serial number securely affixed in a conspicuous place; the nameplate of the distributing agent will not be acceptable.

2.25 FIELD FABRICATED NAMEPLATES

ASTM D 709. Provide laminated plastic nameplates for each equipment

enclosure, relay, switch, and device; as specified or as indicated on the drawings. Each nameplate inscription shall identify the function and, when applicable, the position. Nameplates shall be melamine plastic, 3 mm (0.125 inch) thick, white with black center core. Surface shall be matte finish. Corners shall be square. Accurately align lettering and engrave into the core. Minimum size of nameplates shall be 25 by 65 mm (one by 2.5 inches). Lettering shall be a minimum of 6.35 mm (0.25 inch) high normal block style.

2.26 WARNING SIGNS

Provide warning signs for flash protection in accordance with NFPA 70E and NEMA Z535.4 for switchboards, panelboards, industrial control panels, and motor control centers that are in other than dwelling occupancies and are likely to require examination, adjustment, servicing, or maintenance while energized. Provide field installed signs to warn qualified persons of potential electric arc flash hazards when warning signs are not provided by the manufacturer. The marking shall be clearly visible to qualified persons before examination, adjustment, servicing, or maintenance of the equipment.

2.27 WIREWAYS

UL 870. Material shall be steel galvanized 16 gauge for heights and depths up to 150 by 150 mm (6 by 6 inches), and 14 gauge for heights and depths up to 305 by 305 mm (12 by 12 inches). Provide in length required for the application with hinged-cover NEMA 1 enclosure per NEMA ICS 6.

2.28 SURGE PROTECTIVE DEVICES

Provide parallel type surge protective devices which comply with UL 1449 at the service entrance. Provide surge protectors in a NEMA 1 enclosure per NEMA ICS 6. Provide the following modes of protection:

FOR SINGLE PHASE AND THREE PHASE WYE CONNECTED SYSTEMS-
- Each phase to neutral (L-N)
- Neutral to ground (N-G)
- Phase to ground (L-G)

FOR DELTA CONNECTIONS-
- Phase to phase (L-L)
- Phase to ground (L-G)

Surge protective devices at the service entrance shall have a minimum surge current rating of 80,000 amperes per mode minimum and downstream protectors shall be rated 40,000 amperes per mode minimum. The maximum line to neutral (L-N) Suppressed Voltage Rating (SVR) shall be:

500V for 120V, single phase system
500V for 120/240V, single phase system
500V for 208Y/120V, three phase system
900V for 480Y/277V, three phase system

The minimum MCOV (Maximum Continuous Operating Voltage) rating shall be:

150V for 120V, single phase system
300/150V for 120/240V, single phase system
300/150V for 208Y/120V, three phase system
600/320V for 480Y/277V, three phase system

EMI/RFI filtering shall be provided for each mode with the capability to attenuate high frequency noise. Minimum attenuation shall be 20db.

2.29 FACTORY APPLIED FINISH

Electrical equipment shall have factory-applied painting systems which shall, as a minimum, meet the requirements of NEMA 250 corrosion-resistance test and the additional requirements as specified herein. Interior and exterior steel surfaces of equipment enclosures shall be thoroughly cleaned and then receive a rust-inhibitive phosphatizing or equivalent treatment prior to painting. Exterior surfaces shall be free from holes, seams, dents, weld marks, loose scale or other imperfections. Interior surfaces shall receive not less than one coat of corrosion-resisting paint in accordance with the manufacturer's standard practice. Exterior surfaces shall be primed, filled where necessary, and given not less than two coats baked enamel with semigloss finish. Equipment located indoors shall be ANSI Light Gray, and equipment located outdoors shall be ANSI Light Gray. Provide manufacturer's coatings for touch-up work and as specified in paragraph FIELD APPLIED PAINTING.

2.30 SOURCE QUALITY CONTROL

2.30.1 Transformer Factory Tests

Submittal shall include routine NEMA ST 20 transformer test results on each transformer and also contain the results of NEMA "design" and "prototype" tests that were made on transformers electrically and mechanically equal to those specified.

2.31 COORDINATED POWER SYSTEM PROTECTION

Analyses shall be prepared as specified in Section 16475A, COORDINATED POWER SYSTEM PROTECTION.

PART 3 EXECUTION

3.1 INSTALLATION

Electrical installations shall conform to requirements of NFPA 70 and to requirements specified herein.

3.1.1 Underground Service

Underground service conductors and associated conduit shall be continuous from service entrance equipment to outdoor power system connection.

3.1.2 Service Entrance Identification

Service entrance disconnect devices, switches, and enclosures shall be labeled and identified as such.

3.1.2.1 Labels

Wherever work results in service entrance disconnect devices in more than one enclosure, as permitted by NFPA 70, each enclosure, new and existing, shall be labeled as one of several enclosures containing service entrance disconnect devices.

3.1.3 Wiring Methods

Provide insulated conductors installed in rigid steel conduit, IMC, rigid nonmetallic conduit, EMT, or Non-Metallic Tube (PVC) except where specifically indicated or specified otherwise or required by NFPA 70 to be installed otherwise. Grounding conductor shall be separate from electrical system neutral conductor. Provide insulated green equipment grounding conductor for circuit(s) installed in conduit and raceways. Minimum conduit size shall be 21 mm in diameter for low voltage lighting and power circuits. Vertical distribution in multiple story buildings shall be made with metal conduit in fire-rated shafts. Metal conduit shall extend through shafts for minimum distance of 150 mm. Conduit which penetrates fire-rated walls, fire-rated partitions, or fire-rated floors shall be firestopped in accordance with ASTM E 119, ASTM E 814, ASTM E 1399, and ASTM E 1966.

3.1.3.1 Restrictions Applicable to EMT

a. Use according to International Building Code requirements, ASTM standards.

3.1.3.2 Applicable to Nonmetallic Conduit

a. PVC Schedule 40
(1) Use according to International Building Code requirements, ASTM standards.

b. Electrical Nonmetallic Tubing
(1) Use according to International Building Code requirements, ASTM standards.

3.1.3.3 Applicable to Flexible Conduit

Use according to DIN, I.E.C., BS, or EN standards.

3.1.3.4 Service Entrance Conduit, Underground

PVC, Type-EPC 40, galvanized rigid steel or steel IMC.

3.1.4 Conduit Installation

Unless indicated otherwise, conceal conduit under floor slabs and within finished walls, ceilings, and floors. Keep conduit minimum 150 mm away from parallel runs of flues and steam or hot water pipes. Install conduit parallel with or at right angles to ceilings, walls, and structural members where located above accessible ceilings and where conduit will be visible after completion of project.

3.1.4.1 Conduit Installed Under Floor Slabs

Conduit run under floor slab shall be located a minimum of 305 mm below the vapor barrier. Seal around conduits at penetrations thru vapor barrier.

3.1.4.2 Conduit Through Floor Slabs

Where conduits rise through floor slabs, curved portion of bends shall not be visible above finished slab.

3.1.4.3 Conduit Support

Support conduit by pipe straps, wall brackets, hangers, or ceiling trapeze. Fasten by wood screws to wood; by toggle bolts on hollow masonry units; by concrete inserts or expansion bolts on concrete or brick; and by machine screws. Do not weld conduits or pipe straps to steel structures. Load applied to fasteners shall not exceed one-fourth proof test load or according to International Building Code requirements, ASTM standards.

3.1.4.4 Directional Changes in Conduit Runs

Make changes in direction of runs. Make field-made bends and offsets with hickey or conduit-bending machine. Do not install crushed or deformed conduits. Avoid trapped conduits. Prevent plaster, dirt, or trash from lodging in conduits, boxes, fittings, and equipment during construction. Free clogged conduits of obstructions.

3.1.4.5 Conduit Installed in Concrete Floor Slabs

Locate so as not to adversely affect structural strength of slabs. Install conduit within middle one-third of concrete slab. Space conduits horizontally not closer than three diameters, except at cabinet locations. Curved portions of bends shall not be visible above finish slab. Increase slab thickness as necessary to provide minimum 25 mm cover over conduit.

3.1.4.6 Locknuts and Bushings

Fasten conduits to sheet metal boxes and cabinets with two locknuts where required by NFPA 70.

Basis of Design: O-Z/Gedney, Steel City, or Appleton.

3.1.4.7 Flexible Connections

Provide flexible steel conduit between 915 and 1830 mm in length for recessed and semirecessed lighting fixtures; for equipment subject to vibration, noise transmission, or movement; and for motors. Install flexible conduit to allow 20 percent slack. Minimum flexible steel conduit size shall be 16 mm diameter. Provide liquidtight flexible nonmetallic conduit in wet and damp locations and in fire pump rooms for equipment subject to vibration, noise transmission, movement or motors. Provide separate ground conductor across flexible connections.

3.1.5 Boxes, Outlets, and Supports

3.1.5.1 Boxes

Boxes for use with raceway systems shall be according to DIN, I.E.C., BS, or EN standards.

3.1.5.2 Pull Boxes

Construct of at least minimum size required by NFPA 70, of code-gauge aluminum or nonmetallic raceway systems.

3.1.6 Mounting Heights

Mount panelboards, enclosed circuit breakers, motor controller and disconnecting switches so height of operating handle at its highest

position is maximum 1980 mm above floor. Mount lighting switches 1220 mm above finished floor, receptacles 460 mm above finished floor, and other devices as indicated. Measure mounting heights of wiring devices and outlets in non-hazardous areas to center of device or outlet.

3.1.7 Splices

Make splices in accessible locations, according to International Building Code requirements, ASTM standards.

3.1.8 Electrical Penetrations

Seal openings around electrical penetrations through fire resistance-rated walls, partitions, floors, or ceilings in accordance with ASTM E 119, ASTM E 814, ASTM E 1399, ASTM E 1966.

3.1.9 Grounding and Bonding

In accordance with NFPA 70 and NFPA 780. Ground exposed, non-current-carrying metallic parts of electrical equipment, metallic raceway systems, grounding conductor in metallic and nonmetallic raceways, telephone system grounds, grounding conductor of nonmetallic sheathed cables, and neutral conductor of wiring systems. Make ground connection at main service equipment, and extend grounding conductor to point of entrance of metallic water service. Make connection to water pipe by suitable ground clamp or lug connection to plugged tee. If flanged pipes are encountered, make connection with lug bolted to street side of flanged connection. Supplement metallic water service grounding system with additional made electrode in compliance with NFPA 70. Make ground connection to driven ground rods on exterior of building. Interconnect all grounding media in or on the structure to provide a common ground potential. This shall include lightning protection, electrical service, telephone system grounds, as well as underground metallic piping systems. Interconnection to the gas line shall be made on the customer's side of the meter.

3.1.9.1 Resistance

Maximum resistance-to-ground of grounding system shall not exceed 25 ohms under dry conditions. Where resistance obtained exceeds 25 ohms, contact Government for further instructions.

3.1.9.2 Telephone Service

Provide main telephone service equipment ground consisting of separate ground wire, The same size as the Class I lightning protection system main conductor or 16 square millimeters, whichever is larger, in conduit between equipment backboard and readily accessible grounding connection. Equipment end of ground wire shall consist of coiled length at least twice as long as terminal cabinet or backboard height.

3.1.10 Equipment Connections

Provide power wiring for the connection of motors and control equipment under this section of the specification. Except as otherwise specifically noted or specified, automatic control wiring, control devices, and protective devices within the control circuitry are not included in this section of the specifications but shall be provided under the section specifying the associated equipment.

3.2 TESTS, INSPECTIONS, AND VERIFICATIONS

3.2.1 Cable Data

Manufacture of the wire and cable shall not be started until all materials to be used in the fabrication of the finished wire or cable have been approved by the Government. Cable data shall be submitted for approval including dimensioned sketches showing cable construction, and sufficient additional data to show that these specifications will be satisfied.

3.2.2 Inspection and Tests

Inspection and tests of wire and cable furnished under these specifications shall be made by and at the plant of the manufacturer, and shall be witnessed by the Government or his authorized representative, unless waived in writing. The Government may perform further tests before or after installation. Testing in general shall comply with NEMA WC 70. Specific tests required for particular materials, components, and completed cables shall be as specified in the sections of the above standards applicable to those materials, components, and cable types. Tests shall also be performed in accordance with the additional requirements specified below.

3.2.2.1 High-Voltage Test Source

Where the applicable standards allow a choice, high-voltage tests for cables to be used exclusively on dc circuits shall be made with dc test voltages. Cables to be used exclusively on ac circuits shall be tested with ac test voltages. If both ac and dc will be present, on either the same or separate conductors of the cable, ac test voltages shall be used.

3.2.2.2 Independent Tests

The Government may at any time make visual inspections, continuity or resistance checks, insulation resistance readings, power factor tests, or dc high-potential tests at field test values. A cable's failure to pass these tests and inspections, or failure to produce readings consistent with acceptable values for the application, will be grounds for rejection of the cable.

3.2.2.3 Reports

Results of tests made shall be furnished. No wire or cable shall be shipped until authorized. Lot number and reel or coil number of wire and cable tested shall be indicated on the test reports.

3.3 FIELD QUALITY CONTROL

Furnish test equipment and personnel and submit written copies of test results. Give Government 5 working days notice prior to each test.

3.3.1 Ground-Fault Receptacle Test

Test ground-fault receptacles with a "load" (such as a plug in light) to verify that the "line" and "load" leads are not reversed.

3.3.2 Grounding System Test

Test grounding system to ensure continuity, and that resistance to ground

is not excessive. Test each ground rod for resistance to ground before making connections to rod; tie grounding system together and test for resistance to ground. Make resistance measurements in dry weather, not earlier than 48 hours after rainfall. Submit written results of each test to Government, and indicate location of rods as well as resistance and soil conditions at time measurements were made.

3.4 SCHEDULE

Some metric measurements in this section are based on mathematical conversion of inch-pound measurements, and not on metric measurement commonly agreed to by the manufacturers or other parties. The inch-pound and metric measurements are as follows:

PRODUCTS		INCH-POUND	METRIC
a. Conduit			
	- diameter	1/2 inches	16 mm
		3/4 inches	21 mm
		1 inch	27 mm
		1-1/4 inches	35 mm
		1-1/2 inches	41 mm
		2 inches	53 mm
		2-1/2 inches	63 mm
		3 inches	78 mm
		3-1/2 inches	91 mm
		4 inches	103 mm
		5 inches	129 mm
		6 inches	155 mm
b. Cable tray			
	- depth	3 inches	75 mm
		4 inches	100 mm
		6 inches	150 mm
	- width	12 inches	305 mm
		18 inches	455 mm
		24 inches	610 mm
		30 inches	760 mm
		36 inches	915 mm
c. Cabinets, junction and pull boxes			
	- volume 100 cubic inches 1640 mL		
d. Device plates			
- thickness 0.03 inches 0.792 mm			
e. Outlet boxes		2 by 4 by 1 1/2 inches	5 by 100 by 40 mm
		4 by 4 by 2 1/8 inch	100 by 100 by 54 mm
f. Plywood			
	- thickness 3/4 inch 19 mm		
	- size 4 by 8 feet 1220 by 2440 mm		
g. Ground rod			
	- diameter 3/4 inch 19 mm		
	- length 10 feet 3050 mm		
h. Wireways			
	- sizes	2 1/2 by 2 1/2 inches	63.5 by 63.5 mm
		4 by 4 inches	100 by 100 mm
		6 by 6 inches	150 by 150 mm
		8 by 8 inches	200 by 200 mm
		12 by 12 inches	305 by 305 mm

-- End of Section --

SECTION 16403

PANELBOARDS

PART 1 GENERAL

1.1 REFERENCES

The publications listed below form a part of this specification to the extent referenced. The publications are referred to in the text by basic designation only.

Unless noted otherwise, all material used shall be in compliance with the requirements of the applicable German (DIN) Standards. In the event DIN Standard material is unavailable, contractor may then select comparable British Standard (BS), or Underwriters Laboratories Inc. (UL) listed material. Equipment enclosure types shall be in compliance with the National Electrical Manufacturer's Association (NEMA) or the International Electro-Technical Committee (IEC) standards. Material and equipment installed under this contract shall be for the appropriate application.

ASTM INTERNATIONAL (ASTM)

ASTM B 187	(1994) Copper Bar, Bus Bar, Rod and Shapes

ASME INTERNATIONAL (ASME)

ASME B1.1	(1989) Unified Inch Screw Threads (UN and UNR Thread Form)
ASME B1.20.1	(1983; R 2001) Pipe Threads, General Purpose (Inch)

BRITISH STANDARDS INSTITUTION (BSI)

BS 5824	(1980) Specification for low voltage switchgear and controlgear for industrial use. Mounting rails. C-profile and accessories for the mounting of equipment
BS 5825	(1980) Specification for low voltage switchgear and controlgear for industrial use. Mounting rails. G-profile for the fixing of terminal blocks
BS EN 50300-2	(2004) Low-voltage switchgear and controlgear assemblies. General requirements for low-voltage substation cable distribution boards.
BS EN 60439-3	(Jun 1991) Low-voltage switchgear and controlgear assemblies; Part 3: Particular requirements for assemblies intended to be installed in places where unskilled persons have access to their use - Distribution boards

BS EN 60947-2	(2001, Ed. 2.2) Low-voltage switchgear and controlgear; Part 2. Circuit breaker
BS EN 62208	(2004) Empty enclosures for low-voltage switchgear and controlgear assemblies.

DUETSCHES INSTITUTE FUR NORMUNG (DIN)

DIN 60439	(1999) Low-voltage switchgear and controlgear assemblies.

INTERNATIONAL ELECTROTECHNICAL COMMISSION IEC)

IEC 60439	(1999) Low-voltage switchgear and controlgear assemblies.
IEC 60529	(2001-02, Ed. 2.1) Degrees of Protection Provided by Enclosures (IP Code)
IEC 60898-1	(2002, Ed. 1.0) Electrical accessories - Circuit Breakers for overcurrent protection for households and similar installations - Part 1: Circuit breakers for a.c. operation

NATIONAL ELECTRICAL MANUFACTURERS ASSOCIATION (NEMA)

NEMA AB 1	(1999) Molded Case Circuit Breakers and Molded Case Switches
NEMA PB 1	(1995) Panelboards

UNDERWRITERS LABORATORIES (UL)

UL 50	(1995; Rev thru Nov 1999) Enclosures for Electrical Equipment
UL 67	(1993; Rev thru Oct 1999) Panelboards
UL 489	((1996; Rev thru Mar 2000) Molded-Case Circuit Breakers, Molded-Case Switches, and Circuit-Breaker Enclosures

1.2 SYSTEM DESCRIPTION

These specifications include the design, fabrication, assembly, wiring, and delivery of the items of equipment and accessories and spare parts listed in the Schedule and shown on the drawings.

1.2.1 Coordination

The general arrangement of the panelboards is shown on the contract drawings. Any modifications of the equipment arrangement or device requirements as shown on the drawings shall be subject to the approval of the Government. If any conflicts occur necessitating departures from the drawings, details of and reasons for departures shall be submitted and approved prior to implementing any change. All equipment shall be completely assembled at the factory.

1.2.2 Standard Products

Material and equipment shall be standard products of a manufacturer regularly engaged in their manufacture and shall essentially duplicate items that have been in satisfactory use for at least 2 years prior to bid opening. All materials shall conform to the requirements of these specifications. Materials shall be of high quality, free from defects and imperfections, of recent manufacture, and of the classification and grades designated. All materials, supplies, and articles not manufactured by the Contractor shall be the products of other recognized reputable manufacturers. If the Contractor desires for any reason to deviate from the standards designated in these specifications, he shall, after award, submit a statement of the exact nature of the deviation, and shall submit, for the approval of the Government, complete specifications for the materials which he proposes to use.

1.2.3 Nameplates

Nameplates shall be made of laminated sheet plastic or of anodized aluminum to provide white letters on a black background. The nameplates shall be fastened to the panels in proper positions.

1.3 MATERIAL AUTHENTICATION DATA INCLUDED IN DESIGN ANALYSIS

Government approval is required for submittals with a "G" designation; submittals not having a "G" designation are for information only. When used, a designation following the "G" designation identifies the office that will review the submittal for the Government. The following shall be submitted in accordance with Section 01330 SUBMITTAL PROCEDURES:

SD-02 Shop Drawings

Panelboards

The Contractor shall, within 30 calendar days after date of receipt by him of notice of award, submit for the approval of the Government six (6) copies of outline drawings of all equipment to be furnished under this contract, together with weights and overall dimensions. Drawings shall show the general arrangement and overall dimensions of the motor control centers, switchboards, and panelboards. These drawings shall show space requirements, details of any floor supports to be embedded in concrete and provisions for conduits for external cables.

The Contractor shall, within 30 calendar days after date of receipt by him of notice of award, submit for the approval of the Government six (6) copies of electrical equipment drawings. A single-line diagram, equipment list and nameplate schedule shall be provided for each switchboard and panelboard.

SD-03 Product Data

Panelboards

The Contractor shall within 30 calendar days after date of receipt by him of notice of award submit for approval six (6) copies of such descriptive cuts and information as are required to demonstrate fully that all parts of the equipment will conform to

the requirements and intent of the specifications. Data shall include descriptive data showing typical construction of the types of equipment proposed, including the manufacturer's name, type of molded case circuit breakers or motor circuit protectors, performance capacities and other information pertaining to the equipment.

1.4 MAINTENANCE

1.4.1 Spare Parts

Spare parts shall be furnished as specified below. All spare parts shall be of the same material and workmanship, shall meet the same requirements, and shall be interchangeable with the corresponding original parts furnished.

a. 2 each - Fuses of each type and size.

PART 2 PRODUCTS

2.1 General Standards

BS EN 50300-2 for general requirement for L.V. substation cable distribution boards.

BS EN 60947-2 for ancillary equipment.

BS EN 60439-3, DIN 60439 and IEC 60439 for L.V. switchgear intended to be installed in places where unskilled persons have access to their use.

BS 5824 and BS 5825 for L.V. switchgear industrial use.

2.2 CONNECTIONS

All bolts, studs, machine screws, nuts, and tapped holes shall be in accordance with ASME B1.1. The sizes and threads of all conduit and fittings, tubing and fittings, and connecting equipment shall be in accordance with ASME B1.20.1.

2.3 CIRCUIT BREAKERS

Circuit breakers shall conform to the applicable requirements of NEMA AB 1, UL 489, or DIN, IEC 60898-1 , or BS EN 60947-2, standards. The circuit breakers shall be manually-operated, shall be quick-make, quick-break, common trip type, and shall be of automatic-trip type unless otherwise specified or indicated on the drawings. All poles of each breaker shall be operated simultaneously by means of a common handle. The operating handles shall clearly indicate whether the breakers are in "On," "Off," or "Tripped" position and shall have provisions for padlocking in the "Off" position. Personnel safety line terminal shields shall be provided for each breaker. The circuit breakers shall be products of only one manufacturer, and shall be interchangeable when of the same frame size.

2.3.1 Trip Units

Except as otherwise noted, the circuit breakers, of frame sizes and the trip unit ratings as shown on the drawings, shall be provided with combination thermal and instantaneous magnetic trip units. Nonadjustable instantaneous magnetic trip units shall be set at approximately 10 times

the continuous current ratings of the circuit breakers.

2.4 PANELBOARDS

Panelboards shall consist of assemblies of molded-case circuit breakers for the main breaker only and miniature circuit breakers with buses and terminal lugs for the control and protection of branch circuits to motors, heating devices and other equipment operating at 380 volts ac or less. Panelboards shall be UL 67, BS EN 60439-3, DIN 60439 or IEC 60439 labeled. Panelboards shall be designed for installation in surface-mounted or flush-mounted cabinets accessible from the front only, as shown on the drawings.

2.4.1 Enclosure

Enclosures shall meet the requirements of BS EN 62208, UL 50, IEC 60529. All cabinets shall be fabricated from sheet steel. Cabinets shall be painted in accordance with paragraph PAINTING. Enclosures shall meet NEMA 3R (IP 41) or higher for outdoor and NEMA Type 1 (IP 10) or higher for indoor application.

2.4.2 Buses

All panelboards shall be of the dead-front type with buses and circuit breakers mounted on a plate or base for installation as a unit in a cabinet. All buses shall be of copper. Copper bars and shapes for bus conductors shall conform to the applicable requirements of ASTM B 187. The sizes of buses and the details of panelboard construction shall meet or exceed the requirements of NEMA PB 1, or BS EN 60947-2.

2.4.3 Components

Each branch circuit, and the main buses where so specified or shown on the drawings, shall be equipped with molded-case circuit breakers having overcurrent trip ratings as shown on the drawings. The circuit breakers shall be of a type designed for bolted connection to buses in a panelboard assembly, and shall meet the requirements of paragraph CIRCUIT BREAKERS. Circuit breakers of the same frame size and rating shall be interchangeable.

2.5 MOTOR CONTROL

2.5.1 Motor Starters

Motor starters shall be provided of sizes, ratings and NEMA or equivalent type as required for motors provided and in accordance with BS EN 60947-4-1: 2001.

2.5.1.1 Manual Motor Starter

Provide single-phase, fractional HP manual motor controllers as required. Equip with manaully operated quick-make, quick-break toggle mechanisms; and with one-piece melting alloy type thermal units. Controller to become inoperative when thermal unit is removed. Enclose controller unit in NEMA Box Type as required for surface mounting. Controller shall be suitable for mounting in standard switch box and installed flush in finished room environments. Coat with manufacturer's standard color finish.

2.5.1.2 Full Voltage Starter

Provide full-voltage non-reversing (FVNR), alternating-current combination starters consisting of controller, fused 220V control transformer, push buttons, selector switches, and indicating lights, mounted in common enclosure, as required. Equip controller with electrical interlocks as indicated. Provide controller with two normally open and two normally closed spare auxiliary contacts. Equip controller with block type manual external reset three-phase overload relay. Construct and mount controller and disconnect mechanism in manufacturer's standard color finish.

2.5.1.3 Combination Disconnect and Full Voltage Starter

Provide starter as specified for stand-alone full voltage nn-reversing starter, and provide with nonfused disconnect switch mounted in common enclosure. Provide operating handle for disconnect mechanism with indication of control switch position, with enclosure door either opened or closed.

2.6 PAINTING

Interior and exterior steel surfaces of equipment enclosures shall be thoroughly cleaned and then receive a rust-inhibitive phosphatizing or equivalent treatment prior to painting. Exterior surfaces shall be free from holes, seams, dents, weld marks, loose scale or other imperfections. Interior surfaces shall receive not less than one coat of corrosion-resisting paint in accordance with the manufacturer's standard practice. Exterior surfaces shall be primed, filled where necessary, and given not less than two coats baked enamel with semigloss finish. Equipment located indoors shall be Light Gray, and equipment located outdoors shall be Light Grey or Dark Gray, or according to International Building Code requirements and ASTM standards . All touch-up work shall be done with manufacturer's coatings as supplied under paragraph SPARE PARTS.

PART 3 EXECUTION (Not Applicable)

-- End of Section --

SECTION 16410

AUTOMATIC TRANSFER SWITCHES

PART 1 GENERAL

1.1 REFERENCES

The publications listed below form a part of this specification to the extent referenced. The publications are referred to within the text by the basic designation only.

Unless noted otherwise, all material used shall be in compliance with the requirements of the applicable German (DIN) Standards. In the event DIN Standard material is unavailable, contractor may then select comparable British Standard (BS), or Underwriters Laboratories Inc. (UL) listed material. Equipment enclosure types shall be in compliance with the National Electrical Manufacturer's Association (NEMA) or the International Electro-Technical Committee (IEC) standards. Material and equipment installed under this contract shall be for the appropriate application.

INTERNATIONAL ELECTRICAL TESTING ASSOCIATION (NETA)

NETA ATS	(2003) Acceptance Testing Specifications

NATIONAL FIRE PROTECTION ASSOCIATION (NFPA)

NFPA 70	(2005) National Electrical Code

UNDERWRITERS LABORATORIES (UL)

UL 1008	(1996; Rev thru Jan 2002) Transfer Switch Equipment
UL 508	(1999; R 2002, Bul. 2001, 2002, 2003) Industrial Control Equipment

1.2 MATERIAL AUTHENTICATION DATA INCLUDED IN DESIGN ANALYSIS

The following is submitted in accordance with Section 01335 SUBMITTAL PROCEDURES FOR DESIGN/BUILD PROJECT. It is included in the Design Analysis for this project.

SD-02 Shop Drawings

Automatic Transfer Switch Drawings

SD-03 Product Data

Automatic Transfer Switches

1.3 SUBMITTALS

The following shall be submitted in accordance with Section 01335 SUBMITTAL PROCEDURES for design built project:

SD-06 Test Reports

Acceptance Checks and Tests

Functional Acceptance Tests

SD-07 Certificates

Proof of Listing

SD-10 Operation and Maintenance Data

Automatic Transfer Switches

1.4 QUALITY ASSURANCE

1.4.1 Proof of Listing

Submit proof of listing by UL 1008.

1.4.2 Automatic Transfer Switch Drawings

Drawings shall include outline, arrangement, and detail drawings. Detail drawings shall include manufacturer's name and catalog number, electrical ratings, total system transfer statement, reduced normal supply voltage at which transfer to the alternate supply is initiated, transfer delay times, short-circuit current rating, wiring diagram, description of interconnections, testing instructions, acceptable conductor type for terminals, tightening torque for each wire connector, and other required UL 1008 markings.

PART 2 PRODUCTS

2.1 AUTOMATIC TRANSFER SWITCHES

Provide three-pole, automatic transfer switches for use in emergency and/or critical systems in accordance with UL 1008. Each automatic transfer switch shall be rated for total system transfer and have the current and voltage ratings as indicated. The rating of the switch shall be adequate for withstanding the effects of the indicated RMS symmetrical fault current when protected by the indicated overcurrent device without contact welding. The switch operating mechanism shall be electrically operated from the source to which it is transferring, shall have quick-make, quick-break, load break contacts, and shall be mechanically held in both positions. Switches utilizing circuit breakers are not acceptable. Non-fire pump service transfer switches shall have manual operating means provided for maintenance and servicing accessible only by opening the enclosure. An internal Manuel handle will be provided for non-loadbreak operation. The switch enclosure shall comply with UL 508, NEMA Type 1, and shall be equipped with an equipment ground lug.

2.1.1 Controls for Utility-Generator Automatic Transfer Switch

Provide all necessary controls to start the generator set upon loss of the normal (utility) source, transfer the load to the generator set upon reaching rated voltage and frequency, re-transfer the load when the normal (utility) source returns, and stop the generator set.

The switch shall include the following control features.

a. Three-phase normal source voltage sensing circuit with adjustable dropout, 75-93 percent of nominal, and pickup, 85-100 percent of nominal.

b. Engine starting control contacts with adjustable commit-to-start delay circuit, 0.5-6.0 seconds.

c. Voltage/frequency sensing circuit, set for 80 percent of nominal, for enabling load transfer to emergency source.

d. Transfer to emergency source time delay for transfer switches as indicated, adjustable 0-5 minutes.

e. Re-transfer to normal source time delay, adjustable 1-30 minutes.

f. Programmable exerciser to allow automatic starting of the generator set and subsequent load transfer. Exercise periods shall be selectable for 1 to 24 hours per day for 0 to 7 days a week.

g. Adjustable time delay transition or in-phase monitor feature for indicated transfer switches to allow safe transfer of highly inductive loads between two non-synchronized sources.

PART 3 EXECUTION

3.1 INSTALLATION

Installation shall conform to the requirements of NFPA 70 and manufacturer's recommendation.

3.2 PREREQUISITES FOR FUNCTIONAL ACCEPTANCE TESTING

Completion of the following requirements is mandatory prior to scheduling functional acceptance tests for the automatic transfer switch.

3.2.1 Manufacturers O&M Information

The manufacturers O&M information required by the paragraph entitled "SD-10 Operation and Maintenance Data", shall have been submitted to and approved by the Contracting Officer.

3.2.2 Test Equipment

All test equipment and instruments shall be on hand prior to scheduling field tests, or subject to Contracting Officer's approval, evidence shall be provided to show that arrangements have been made to have the necessary equipment and instruments on site prior to field testing.

3.3 FIELD QUALITY CONTROL

Give Contracting Officer 15 days notice of dates and times scheduled for tests which require the presence of the Contracting Officer. The Contracting Officer will coordinate with the using activity and schedule a time that will eliminate or minimize interruptions and interference with the activity operations. The contractor shall be responsible for costs associated with conducting tests outside of normal working hours and with incorporating special arrangements and procedures, including temporary power conditions. The contractor shall provide labor, equipment,

apparatus, including test load, and consumables required for the specified tests. Calibration of all measuring devices and indicating devices shall be certified. The test load shall be a cataloged product in accordance with Section 16050 BASIC ELECTRICAL MATERIALS AND METHODS. Perform the following field tests in accordance with the manufacturer's recommendations and include the following visual and mechanical inspections and electrical tests, performed in accordance with NETA ATS.

3.3.1 Automatic Transfer Switch Acceptance Checks and Tests

a. Visual and Mechanical Inspection

1. Compare equipment nameplate data with specifications and approved shop drawings.

2. Inspect physical and mechanical condition.

3. Confirm correct application of manufacturer's recommended lubricants.

4. Verify that manual transfer warnings are attached and visible.

5. Verify tightness of all control connections.

6. Verify tightness of accessible bolted connections by calibrated torque-wrench method. Thermographic survey is not required.

7. Perform manual transfer operation.

8. Verify positive mechanical interlocking between normal and alternate sources.

b. Electrical Tests

1. Measure contact-resistance.

2. Perform insulation-resistance on each pole, phase-to-phase and phase-to-ground with switch closed, and across each open pole for one minute. Perform tests in both source positions.

3. Verify settings and operations of control devices.

4. Calibrate and set all relays and timers.

3.3.2 Functional Acceptance Tests

Functional Acceptance Tests shall include simulating power failure and demonstrating the following operations for each automatic transfer switch. Contractor shall show by demonstration in service that the automatic transfer switches are in good operating condition, and function not less than five times.

a. Perform automatic transfer tests:

1. Simulate loss of normal/preferred power.

2. Return to normal/preferred power.

3. Simulate loss of emergency power.

4. Simulate all forms of single-phase conditions.

b. Verify correct operation and timing of the following functions:

1. Normal source voltage-sensing relays.

2. Engine start sequence.

3. Time delay upon transfer.

4. Alternate source voltage-sensing relays.

5. Automatic transfer operation.

6. Interlocks and limit switch function.

7. Time delay and retransfer upon normal power restoration.

-- End of Section --

SECTION 16442

SWITCHBOARDS AND SWITCHGEAR

PART 1 GENERAL

1.1 REFERENCES

The publications listed below form a part of this specification to the extent referenced. The publications are referred to within the text by the basic designation only.

Unless noted otherwise, all material used shall be in compliance with the requirements of the applicable German (DIN) Standards. In the event DIN Standard material is unavailable, contractor may then select comparable British Standard (BS), or Underwriters Laboratories Inc. (UL) listed material. Equipment enclosure types shall be in compliance with the National Electrical Manufacturer's Association (NEMA) or the International Electro-Technical Committee (IEC) standards. Material and equipment installed under this contract shall be for the appropriate application.

AMERICAN NATIONAL STANDARDS INSTITUTE (ANSI)

ANSI C39.1	(1981; R 1992) Requirements for Electrical Analog Indicating Instruments

ASTM INTERNATIONAL (ASTM)

ASTM A 123/A 123M	(2001) Zinc (Hot-Dip Galvanized) Coatings on Iron and Steel Products
ASTM A 153/A 153M	(2001) Zinc Coating (Hot-Dip) on Iron and Steel Hardware
ASTM A 167	(1999) Stainless and Heat-Resisting Chromium-Nickel Steel Plate, Sheet, and Strip
ASTM A 653/A 653M	(2001a) Steel Sheet, Zinc-Coated (Galvanized) or Zinc-Iron Alloy-Coated (Galvannealed) by the Hot-Dip Process
ASTM A 780	(2001) Repair of Damaged and Uncoated Areas of Hot-Dipped Galvanized Coatings
ASTM D 149	(1997a) Dielectric Breakdown Voltage and Dielectric Strength of Solid Electrical Insulating Materials at Commercial Power Frequencies
ASTM D 1535	(2001) Specifying Color by the Munsell System

INSTITUTE OF ELECTRICAL AND ELECTRONICS ENGINEERS (IEEE)

IEEE C12.15	(1990) Solid-State Demand Registers for

	Electromechanical Watthour Meters
IEEE C12.16	(1991) Solid-State Electricity Meters
IEEE C2	(2002) National Electrical Safety Code
IEEE C37.13	(1990; R 1995) Low-Voltage AC Power Circuit Breakers Used in Enclosures
IEEE C37.20.1	(1993) Metal-Enclosed Low-Voltage Power Circuit-Breaker Switchgear
IEEE C37.20.2	(1999) Standard for Metal-clad switchgear
IEEE C37.90.1	(2002) Surge Withstand Capability (SWC) Tests for Relays and Relay Systems Associated with Electric Power Apparatus
IEEE C57.13	(1993) Instrument Transformers

INTERNATIONAL ELECTRICAL TESTING ASSOCIATION (NETA)

NETA ATS	(2003) Acceptance Testing Specifications

NATIONAL ELECTRICAL MANUFACTURERS ASSOCIATION (NEMA)

NEMA C12.1	(2001) Code for Electricity Metering
NEMA C57.12.28	(1999) Pad-Mounted Equipment - Enclosure Integrity
NEMA LI 1	(1998) Industrial Laminated Thermosetting Products
NEMA PB 2	(1995) Deadfront Distribution Switchboards
NEMA PB 2.1	(2002) General Instructions for Proper Handling, Installation, Operation and Maintenance of Deadfront Distribution Switchboards Rated 600 Volts or Less
NEMA ST 20	(1992; R 1997) Dry-Type Transformers for General Applications

NATIONAL FIRE PROTECTION ASSOCIATION (NFPA)

NFPA 70	(2005) National Electrical Code

UNDERWRITERS LABORATORIES (UL)

UL 1558	(1999) Metal-Enclosed Low-Voltage Power Circuit Breaker Switchgear
UL 198C	(1986; Rev thru Feb 1998)High-Interrupting-Capacity Fuses, Current-Limiting Types
UL 467	(1993; R 2001) Grounding and Bonding Equipment

UL 489	((1996; Rev thru Mar 2000) Molded-Case Circuit Breakers, Molded-Case Switches, and Circuit-Breaker Enclosures
UL 891	(1998; Rev thru Feb 2003) Dead-Front Switchboards

1.2 MATERIAL AUTHENTICATION DATA INCLUDED IN DESIGN ANALYSIS

The following is submitted in accordance with Section 01335 SUBMITTAL PROCEDURES FOR DESIGN/BUILD PROJECT. It is included in the Design Analysis for this project.

SD-03 Product Data

Switchboard and Switchgear

1.3 SUBMITTALS

The following shall be submitted in accordance with Section 01335 SUBMITTAL PROCEDURES for design built project:

SD-06 Test Reports

Switchboard and Switchgear design tests

Switchboard and Switchgear production tests

Acceptance checks and tests

SD-10 Operation and Maintenance Data

Switchboard and Switchgear Operation and Maintenance

1.4 QUALITY ASSURANCE

1.4.1 Switchboard and Switchgear Product Data

Each submittal shall include manufacturer's information for each component, device and accessory provided with the switchboard and switchgear including:

a. Circuit breaker type, interrupting rating, and trip devices, including available settings

b. Manufacturer's instruction manuals and published time-current curves (on full size logarithmic paper) of the main secondary breaker and largest secondary feeder device.

1.4.2 Switchboard and Switchgear Drawings

Drawings shall include, but are not limited to the following:

a. One-line diagram including breakers, fuses, current transformers, and meters.

b. Outline drawings including front elevation, section views, footprint, and overall dimensions .

c. Bus configuration including dimensions and ampere ratings of bus bars.

d. Markings and NEMA nameplate data, including fuse information (manufacturer's name, catalog number, and ratings).

e. Circuit breaker type, interrupting rating, and trip devices, including available settings .

f. Three-line diagrams and elementary diagrams and wiring diagrams with terminals identified, and indicating prewired interconnections between items of equipment and the interconnection between the items.

g. Manufacturer's instruction manuals and published time-current curves (on full size logarithmic paper) of the main secondary breaker and largest secondary feeder device. These shall be used by the designer of record to provide breaker settings that will ensure protection and coordination are achieved.

h. Provisions for future extension.

1.5 MAINTENANCE

1.5.1 Switchboard and Switchgear Operation and Maintenance Data

Submit Operation and Maintenance Manuals in accordance with Section 01781, "Operation and Maintenance Data."

PART 2 PRODUCTS

2.1 PRODUCT COORDINATION

Products and materials not considered to be switchboards or switchgear and related accessories are specified in other sections.

2.2 SWITCHBOARD AND SWITCHGEAR

NEMA PB 2 and UL 891 and IEEE C37.20.1 and UL 1558.

2.2.1 Ratings

The voltage rating of the switchboard and switchgear shall be 15 kv 500 MVA rated, 1200A main bus switchgear. The continuous current rating of the main bus shall be as indicated. The short-circuit current rating shall be as indicated. The switchboard and switchgear shall be UL listed.

2.2.2 Construction

Switchboard and Switchgear shall consist of vertical sections bolted together to form a rigid assembly and shall be front and rear aligned . All circuit breakers shall be front accessible. Front and rear aligned switchboards shall have rear accessible load connections. Compartmentalized switchboards and switchgear shall have vertical insulating barriers between the front device section, the main bus section, and the cable compartment with full front to rear vertical insulating barriers between adjacent sections. Where indicated, "space for future" or "space" shall mean to include bus, device supports, and connections. Provide insulating barriers in accordance with NEMA LI 1, Type GPO-3, 6.35 mm minimum thickness. Apply

moisture resistant coating to all rough-cut edges of barriers. Switchboard shall be completely factory engineered and assembled, including protective devices and equipment indicated with necessary interconnections, instrumentation, and control wiring.

2.2.2.1 Enclosure

The switchboard and switchgear enclosure shall be a NEMA 1 indoor enclosure. Enclosure shall be bolted together with removable bolt-on side and hinged rear covers. Front and rear doors shall be provided with stainless steel pad lockable vault handles with a three point catch. Bases, frames and channels of enclosure shall be corrosion resistant and shall be fabricated of ASTM A 167 type 304 or 304L stainless steel. Base shall include any part of enclosure that is within 75 mm of concrete pad. Galvanized steel shall be ASTM A 123/A 123M, ASTM A 653/A 653M G90 coating, and ASTM A 153/A 153M, as applicable. Galvanize after fabrication where practicable. Paint enclosure, including bases, ASTM D 1535 light gray No. 61 or No. 49. Paint coating system shall comply with NEMA C57.12.28 for galvanized steel .

2.2.2.2 Bus Bars

Bus bars shall be copper with contact surfaces . Plating shall be a minimum of .005mm thick. Make bus connections and joints with hardened steel bolts. The through-bus shall be rated at the full ampacity of the main throughout the switchboard. Provide minimum 6.35 mm by 50.8 mm copper ground bus secured to each vertical section along the entire length of the switchboard and switchgear. The neutral bus shall be rated 100 percent of the main bus continuous current rating. Phase bus bars shall be insulated with an epoxy finish coating powder providing a minimum breakdown voltage of 16,000 volts per ASTM D 149.

2.2.2.3 Main Section

The main section shall consist of an type utilizing vaccum interupt.

2.2.2.4 Distribution Sections

The distribution sections shall consist of vaccum power circuit breakers.

2.2.2.5 Combination Sections

Combination sections shall consist of molded-case circuit breakers for the main and branch devices as indicated.

2.2.2.6 Handles

Handles for individually mounted devices shall be of the same design and method of external operation. Label handles prominently to indicate device ampere rating, color coded for device type. Identify ON-OFF indication by handle position and by prominent marking.

2.2.3 Protective Device

Provide main and branch protective devices as indicated.

2.2.3.1 Power Circuit Breaker

IEEE C37.13. 220 Vac48 Vdc electrically operated drawout, , low-voltage

power circuit breaker with a short-circuit current rating rms amperes symmetrical as indicated at 380 volts. Breaker frame size shall be as indicated . Equip electrically operated breakers with motor-charged, stored-energy closing mechanism to permit rapid and safe closing of the breaker against fault currents within the short time rating of the breaker, independent of the operator's strength or effort in closing the handle.

2.2.3.2 Insulated-Case Breaker

UL listed, 100 percent rated, manually operated, low voltage, insulated-case circuit breaker, with a short-circuit current rating as indicated at 380 volts. Breaker frame size shall be as indicated.

2.2.3.3 Molded-Case Circuit Breaker

UL 489. UL listed and labeled, 100 percent rated, manually operated, low voltage molded-case circuit breaker, with a short-circuit current rating of as indicated at 380 volts. Breaker frame size shall be as indicated. Series rated circuit breakers are unacceptable.

2.2.3.4 Fusible Switches

Fusible Switches: Quick-make, quick-break, hinged-door type. Switches serving as motor disconnects shall be horsepower rated. Fuses shall be current-limiting cartridge type conforming to UL 198C, Class J for 0 to 600 amperes and Class L for 601 to 6000 amperes .

2.2.3.5 Integral Combination Breaker and Current-Limiting Fuses

UL 489. Provide integral combination molded-case circuit breaker and current-limiting fuses as indicated with a minimum short-circuit-current rating equal to the short-circuit-current rating of the switchboard and switchgear in which the circuit breaker will be mounted. Series rated circuit breakers are unacceptable. Coordination of overcurrent devices of the circuit breaker and current-limiting fuses shall be such that on overloads or fault currents of relatively low value, the overcurrent device of the breaker will be operated to clear the fault. For high magnitude short circuits above a predetermined value , the current-limiting fuses shall operate to clear the fault. Housing for the current-limiting fuses shall be an individual molding readily removable from the front and located at the load side of the circuit breaker. If the fuse housing is removed, a blown fuse shall be readily evident by means of a visible indicator. Removal of fuse housing shall cause the breaker contacts to open, and it shall not be possible to close the breaker contacts with the fuse housing removed. It shall not be possible to insert the fuse housing with a blown fuse or with one fuse missing. The blowing of any of the fuses shall cause the circuit breaker contacts to open.

2.2.4 Drawout Breakers

Equip drawout breakers with disconnecting contacts, wheels, and interlocks for drawout application. The main, auxiliary, and control disconnecting contacts shall be silver-plated, multifinger, positive pressure, self-aligning type. Each drawout breaker shall be provided with four-position operation. Each position shall be clearly identified by an indicator on the circuit breaker front panel.

a. Connected Position: Primary and secondary contacts are fully engaged. Breaker must be tripped before racking into or out of

position.

b. Test Position: Primary contacts are disconnected but secondary contacts remain fully engaged. Position shall allow complete test and operation of the breaker without energizing the primary circuit.

c. Disconnected Position: Primary and secondary contacts are disconnected.

d. Withdrawn (Removed) Position: Places breaker completely out of compartment, ready for removal. Removal of the breaker shall actuate assembly that isolates the primary stabs.

2.2.5 Electronic Trip Units

Equip main and distribution breakers as indicated with a solid-state tripping system consisting of three current sensors and a microprocessor-based trip unit that will provide true rms sensing adjustable time-current circuit protection. The ampere rating of the current sensors shall be as indicated . The trip unit ampere rating shall be as indicated . Ground fault protection shall be zero sequence sensing. The electronic trip units shall have the following features as indicated.

a. Breakers shall have long delay pick-up and time settings, and LED indication of cause of circuit breaker trip.

b. Main breakers shall have short delay pick-up and time settings and , instantaneous settings and ground fault settings.

c. Distribution breakers shall have short delay pick-up and time settings, instantaneous settings.

d. Main Breakers shall have a digital display for phase voltage, and percent THD voltage and current.

e. Main Breakers shall have provisions for communication via a network twisted pair cable for remote monitoring and control.

2.2.6 Electronic Trip Unit Central Monitor

Provide a microprocessor-based device designed to monitor and display parameters of the circuit breaker electronic trip units. The central monitor shall have the following features:

a. Alphanumeric display.

b. Indication of circuit breaker status; tripped, open, closed.

c. Cause of circuit breaker trip.

d. Phase, neutral, and ground current for each breaker.

e. Energy parameters for each breaker.

f. Provisions for communicating directly to a remote computer.

2.2.7 Instruments

ANSI C39.1 for electrical indicating switchboard instruments, with 2 percent accuracy. The ac ammeters and voltmeters shall be a minimum of 50.8 mm square, with 4.36 rad scale. Provide single phase indicating instruments with flush-mounted transfer switches for reading three phases.

2.2.7.1 Ac Ammeters

Transformer rated, 5-ampere input, for use with a 1150 to 5-ampere current transformer ratio, 50 hertz.

2.2.7.2 Ac Voltmeters

Self-contained.

2.2.7.3 Instrument Control Switches

Provide rotary cam-operated type with positive means of indicating contact positions. Switches shall have silver-to-silver contacts enclosed in a protective cover which can be removed to inspect the contacts.

2.2.8 Watthour and Digital Meters

2.2.8.1 Digital Meters

IEEE C37.90.1 for surge withstand. Provide true rms, plus/minus one percent accuracy, programmable, microprocessor-based meter enclosed in sealed cases with a simultaneous three line, twelve value LED display. Meters shall have 16 mm, minimum, LEDs. Watthour meter shall have 16 mm, minimum, LEDs. The meters shall accept input from standard 5A secondary instrument transformers and direct voltage monitoring range to 600 volts, phase to phase. Programming shall be via a front panel display and a communication interface with a computer. Password secured programming shall be stored in non-volatile EEPROM memory. Digital communications shall be Modbus RTU protocol via a RS485 serial port. The meter shall calculate and store average max/min demand values for all readings based on a user selectable sliding window averaging period. The meter shall have programmable hi/low set limits with two Form C dry contact relays when exceeding alarm conditions. Meter shall provide Total Harmonic Distortion (THD) measurement to the thirty-first order. The unit shall also store and time stamp up to 100 programmable triggered conditions. Waveforms shall be stored for all 6 channels of voltage and current for a minimum of 10 cycles prior to the event and 50 cycles past the event.

2.2.8.2 Electronic Watthour Meter

Provide a switchboard style electronic programmable watthour meter, semi-drawout, semi-flush mounted, as indicated. Meter shall either be programmed at the factory or shall be programmed in the field. When field programming is performed, turn field programming device over to the Contracting Officer at completion of project. Meter shall be coordinated to system requirements and conform to IEEE C12.16.

a. Design: Provide meter designed for use on a 3-phase, 4-wire, 380Y/220 volt system with 3 current transformers. Include necessary KYZ pulse initiation hardware for Energy Monitoring and Control System (EMCS).

b. Coordination: Provide meter coordinated with ratios of current transformers and transformer secondary voltage.

c. Class: 20. Form: 9S. Accuracy: +/- 1.0 percent. Finish: Class II.

d. Kilowatt-hour Register: 5 digit electronic programmable type.

e. Demand Register:

(1) Provide solid state IEEE C12.15.

(2) Meter reading multiplier: Indicate multiplier on the meter face.

(3) Demand interval length: shall be programmed for 30 minutes with rolling demand up to six subintervals per interval.

f. Meter fusing: Provide a fuse block mounted in the metering compartment containing one fuse per phase to protect the voltage input to the watthour meter. Size fuses as recommended by the meter manufacturer.

2.2.9 Current Transformers

IEEE C57.13. Transformers shall be single ratio, 50 hertz, 600 to 5-ampere ratio, 3.0 rating factor, with a metering accuracy class of 0.3 through B-0.5.

2.2.10 Potential Transformers

Provide two open delta, 15KV 220 VAC, 50 Hz potential transformers.

2.2.11 Meter Fusing

Provide a fuse block mounted in the metering compartment containing one fuse per phase to protect the voltage input to voltage sensing meters. Size fuses as recommended by the meter manufacturer.

2.2.12 Heaters

Provide 120-volt heaters in each switchboard switchgear section. Heaters shall be of sufficient capacity to control moisture condensation in the section, shall be 250 watts minimum, and shall be controlled by a thermostat located in the section. Thermostat shall be industrial type, high limit, to maintain sections within the range of 15 to 32 degrees C. Supply voltage for the heaters shall be obtained from a control power transformer within the switchboard and switchgear. If heater voltage is different than switchboard voltage, provide transformer rated to carry 125 percent of heater full load rating. Transformer shall have 220 degrees C insulation system with a temperature rise not exceeding 115 degrees C and shall conform to NEMA ST 20. Provide method for easy connection of heater to external power source. Provide temporary, reliable external power source if commercial power at rated voltage is not available on site.

2.2.13 Terminal Boards

Provide with engraved plastic terminal strips and screw type terminals for

external wiring between components and for internal wiring between removable assemblies. Terminal boards associated with current transformers shall be short-circuiting type. Terminate conductors for current transformers with ring-tongue lugs. Terminal board identification shall be identical in similar units. External wiring shall be color coded consistently for similar terminal boards.

2.2.14 Wire Marking

Mark control and metering conductors at each end. Provide factory-installed, white, plastic tubing, heat stamped with black block type letters on factory-installed wiring. On field-installed wiring, provide white, preprinted, polyvinyl chloride (PVC) sleeves, heat stamped with black block type letters. Each sleeve shall contain a single letter or number, shall be elliptically shaped to securely grip the wire, and shall be keyed in such a manner to ensure alignment with adjacent sleeves. Provide specific wire markings using the appropriate combination of individual sleeves. Each wire marker shall indicate the device or equipment, including specific terminal number to which the remote end of the wire is attached.

2.3 NAMEPLATES

Provide as specified in Section 16050 BASIC ELECTRICAL MATERIALS AND METHODS.

2.4 WARNING SIGNS

Provide as specified in Section 16050 BASIC ELECTRICAL MATERIALS AND METHODS.

2.5 SOURCE QUALITY CONTROL

2.5.1 Equipment Test Schedule

The Government reserves the right to witness tests. Provide equipment test schedules for tests to be performed at the manufacturer's test facility. Submit required test schedule and location, and notify the Contracting Officer 30 calendar days before scheduled test date. Notify Contracting Officer 15 calendar days in advance of changes to scheduled date.

a. Test Instrument Calibration

(1) The manufacturer shall have a calibration program which assures that all applicable test instruments are maintained within rated accuracy.

(2) The accuracy shall be directly traceable to the National Institute of Standards and Technology.

(3) Instrument calibration frequency schedule shall not exceed 12 months for both test floor instruments and leased specialty equipment.

(4) Dated calibration labels shall be visible on all test equipment.

(5) Calibrating standard shall be of higher accuracy than that of the instrument tested.

(6) Keep up-to-date records that indicate dates and test results of instruments calibrated or tested. For instruments calibrated by the manufacturer on a routine basis, in lieu of third party calibration, include the following:

(a) Maintain up-to-date instrument calibration instructions and procedures for each test instrument.

(b) Identify the third party/laboratory calibrated instrument to verify that calibrating standard is met.

2.5.2 Switchboard and Switchgear Design Tests

NEMA PB 2 and UL 891 and IEEE C37.20.2 and UL 1558.

2.5.2.1 Design Tests

Furnish documentation showing the results of design tests on a product of the same series and rating as that provided by this specification.

a. Short-circuit current test

b. Enclosure tests

c. Dielectric test

2.5.3 Switchboard and Switchgear Production Tests

NEMA PB 2 and UL 891 and IEEE C37.20.2 and UL 1558. Furnish reports which include results of production tests performed on the actual equipment for this project. These tests include:

a. 60-hertz dielectric tests

b. Mechanical operation tests

c. Electrical operation and control wiring tests

d. Ground fault sensing equipment test

PART 3 EXECUTION

3.1 INSTALLATION

Electrical installations shall conform to IEEE C2, NFPA 70, and to the requirements specified herein.

3.2 GROUNDING

NFPA 70 and IEEE C2, except that grounds and grounding systems shall have a resistance to solid earth ground not exceeding 5 ohms.

3.2.1 Grounding Electrodes

Provide driven ground rods as specified in other Electrical Sections . Connect ground conductors to the upper end of the ground rods by exothermic weld or compression connector. Provide compression connectors at equipment end of ground conductors.

3.2.2 Equipment Grounding

Provide bare copper cable not smaller than No. 4/0 AWG not less than 610 mm below grade connecting to the indicated ground rods. When work in addition to that indicated or specified is directed to obtain the specified ground resistance, the provision of the contract covering "Changes" shall apply.

3.2.3 Connections

Make joints in grounding conductors and loops by exothermic weld or compression connector.

3.2.4 Grounding and Bonding Equipment

UL 467, except as indicated or specified otherwise.

3.3 INSTALLATION OF EQUIPMENT AND ASSEMBLIES

Install and connect equipment furnished under this section as indicated on project drawings, the approved shop drawings, and as specified herein.

3.3.1 Switchboard

NEMA PB 2.1.

3.3.2 Switchgear

IEEE C37.20.1.

3.3.3 Meters and Instrument Transformers

NEMA C12.1.

3.3.4 Galvanizing Repair

Repair damage to galvanized coatings using ASTM A 780, zinc rich paint, for galvanizing damaged by handling, transporting, cutting, welding, or bolting. Do not heat surfaces that repair paint has been applied to.

3.4 FOUNDATION FOR EQUIPMENT AND ASSEMBLIES

3.4.1 Interior Location

Mount switchboard and switchgear on concrete slab. Unless otherwise indicated, the slab shall be at least 100 mm thick. The top of the concrete slab shall be approximately 100 mm above finished floor. Edges above floor shall have 15 mm chamfer. The slab shall be of adequate size to project at least 100 mm beyond the equipment. Provide conduit turnups and cable entrance space required by the equipment to be mounted. Seal voids around conduit openings in slab with water- and oil-resistant caulking or sealant. Cut off and bush conduits 75 mm above slab surface. Concrete work shall be as specified in Section 03300 CAST-IN-PLACE CONCRETE.

3.5 FIELD QUALITY CONTROL

Contractor shall submit request for settings of breakers to the Contracting Officer after approval of switchboard and switchgear and at least 30 days in advance of their requirement.

3.5.1 Performance of Acceptance Checks and Tests

Perform in accordance with the manufacturer's recommendations and include the following visual and mechanical inspections and electrical tests, performed in accordance with NETA ATS.

3.5.1.1 Switchboard Assemblies

a. Visual and Mechanical Inspection

(1) Compare equipment nameplate data with specifications and approved shop drawings.

(2) Inspect physical, electrical, and mechanical condition.

(3) Confirm correct application of manufacturer's recommended lubricants.

(4) Verify appropriate anchorage, required area clearances, and correct alignment.

(5) Inspect all doors, panels, and sections for paint, dents, scratches, fit, and missing hardware.

(6) Verify that circuit breaker sizes and types correspond to approved shop drawings.

(7) Verify that current transformer ratios correspond to approved shop drawings.

(8) Inspect all bolted electrical connections for high resistance using low-resistance ohmmeter, verifying tightness of accessible bolted electrical connections by calibrated torque-wrench method, or performing thermographic survey.

(9) Confirm correct operation and sequencing of electrical and mechanical interlock systems.

(10) Clean switchboard.

(11) Inspect insulators for evidence of physical damage or contaminated surfaces.

(12) Verify correct barrier and shutter installation and operation.

(13) Exercise all active components.

(14) Inspect all mechanical indicating devices for correct operation.

(15) Verify that vents are clear.

(16) Test operation, alignment, and penetration of instrument transformer withdrawal disconnects.

(17) Inspect control power transformers.

b. Electrical Tests

(1) Perform insulation-resistance tests on each bus section.

(2) Perform overpotential tests.

(3) Perform insulation-resistance test on control wiring; Do not perform this test on wiring connected to solid-state components.

(4) Perform control wiring performance test.

(5) Perform primary current injection tests on the entire current circuit in each section of assembly.

(6) Verify operation of switchboard heaters.

3.5.1.2 Switchgear

a. Visual and Mechanical Inspection

(1) Compare equipment nameplate data with specifications and approved shop drawings.

(2) Inspect physical, electrical, and mechanical condition.

(3) Confirm correct application of manufacturer's recommended lubricants.

(4) Verify appropriate anchorage, required area clearances, and correct alignment.

(5) Inspect all doors, panels, and sections for paint, dents, scratches, fit, and missing hardware.

(6) Verify that circuit breaker sizes and types correspond to approved shop drawings.

(7) Verify that current transformer ratios correspond to approved shop drawings.

(8) Inspect all bolted electrical connections for high resistance using low-resistance ohmmeter, verifying tightness of accessible bolted electrical connections by calibrated torque-wrench method, or performing thermographic survey.

(9) Confirm correct operation and sequencing of electrical and mechanical interlock systems.

(10) Clean switchgear.

(11) Inspect insulators for evidence of physical damage or contaminated surfaces.

(12) Verify correct barrier and shutter installation and operation.

(13) Exercise all active components.

(14) Inspect all mechanical indicating devices for correct

operation.

(15) Verify that vents are clear.

(16) Test operation, alignment, and penetration of instrument transformer withdrawal disconnects.

(17) Inspect control power transformers.

b. Electrical Tests

(1) Perform insulation-resistance tests on each bus section.

(2) Perform overpotential tests.

(3) Perform insulation-resistance test on control wiring; Do not perform this test on wiring connected to solid-state components.

(4) Perform control wiring performance test.

(5) Perform primary current injection tests on the entire current circuit in each section of assembly.

(6) Verify operation of switchgear heaters.

3.5.1.3 Circuit Breakers - Low Voltage - Power

a. Visual and Mechanical Inspection

(1) Compare nameplate data with specifications and approved shop drawings.

(2) Inspect physical and mechanical condition.

(3) Confirm correct application of manufacturer's recommended lubricants.

(4) Inspect anchorage, alignment, and grounding. Inspect arc chutes. Inspect moving and stationary contacts for condition, wear, and alignment.

(5) Verify that all maintenance devices are available for servicing and operating the breaker.

(6) Verify that primary and secondary contact wipe and other dimensions vital to satisfactory operation of the breaker are correct.

(7) Perform all mechanical operator and contact alignment tests on both the breaker and its operating mechanism.

(8) Inspect all bolted electrical connections for high resistance using low-resistance ohmmeter, verifying tightness of accessible bolted electrical connections by calibrated torque-wrench method, or performing thermographic survey.

(9) Verify cell fit and element alignment.

(10) Verify racking mechanism.

b. Electrical Tests

(1) Perform contact-resistance tests on each breaker.

(2) Perform insulation-resistance tests.

(3) Adjust Breaker(s) for final settings in accordance with Government provided settings.

(4) Determine long-time minimum pickup current by primary current injection.

(5) Determine long-time delay by primary current injection.

(6) Determine short-time pickup and delay by primary current injection.

(7) Determine ground-fault pickup and delay by primary current injection.

(8) Determine instantaneous pickup value by primary current injection.

(9) Activate auxiliary protective devices, such as ground-fault or undervoltage relays, to ensure operation of shunt trip devices; Check the operation of electrically-operated breakers in their cubicle.

(10) Verify correct operation of any auxiliary features such as trip and pickup indicators, zone interlocking, electrical close and trip operation, trip-free, and antipump function.

(11) Verify operation of charging mechanism.

3.5.1.4 Circuit Breakers

Insulated-Caseand Molded Case with Solid State Trips

a. Visual and Mechanical Inspection

(1) Compare nameplate data with specifications and approved shop drawings.

(2) Inspect circuit breaker for correct mounting.

(3) Operate circuit breaker to ensure smooth operation.

(4) Inspect case for cracks or other defects.

(5) Inspect all bolted electrical connections for high resistance using low resistance ohmmeter, verifying tightness of accessible bolted connections and/or cable connections by calibrated torque-wrench method, or performing thermographic survey.

(6) Inspect mechanism contacts and arc chutes in unsealed units.

b. Electrical Tests

(1) Perform contact-resistance tests.

(2) Perform insulation-resistance tests.

(3) Perform Breaker adjustments for final settings in accordance with Government provided settings.

(4) Perform long-time delay time-current characteristic tests

(5) Determine short-time pickup and delay by primary current injection.

(6) Determine instantaneous pickup current by primary injection.

3.5.1.5 Current Transformers

a. Visual and Mechanical Inspection

(1) Compare equipment nameplate data with specifications and approved shop drawings.

(2) Inspect physical and mechanical condition.

(3) Verify correct connection.

(4) Verify that adequate clearances exist between primary and secondary circuit.

(5) Inspect all bolted electrical connections for high resistance using low-resistance ohmmeter, verifying tightness of accessible bolted electrical connections by calibrated torque-wrench method, or performing thermographic survey.

(6) Verify that all required grounding and shorting connections provide good contact.

b. Electrical Tests

(1) Perform resistance measurements through all bolted connections with low-resistance ohmmeter, if applicable.

(2) Perform insulation-resistance tests.

(3) Perform polarity tests.

(4) Perform ratio-verification tests.

3.5.1.6 Metering and Instrumentation

a. Visual and Mechanical Inspection

(1) Compare equipment nameplate data with specifications and approved shop drawings.

(2) Inspect physical and mechanical condition.

(3) Verify tightness of electrical connections.

b. Electrical Tests

(1) Determine accuracy of meters at 25, 50, 75, and 100 percent of full scale.

(2) Calibrate watthour meters according to manufacturer's published data.

(3) Verify all instrument multipliers.

(4) Electrically confirm that current transformer and voltage transformer secondary circuits are intact.

3.5.1.7 Grounding System

a. Visual and Mechanical Inspection

(1) Inspect ground system for compliance with contract plans and specifications.

b. Electrical Tests

(1) Perform ground-impedance measurements utilizing the fall-of-potential method. On systems consisting of interconnected ground rods, perform tests after interconnections are complete. On systems consisting of a single ground rod perform tests before any wire is connected. Take measurements in normally dry weather, not less than 48 hours after rainfall. Use a portable ground testing megger in accordance with manufacturer's instructions to test each ground or group of grounds. The instrument shall be equipped with a meter reading directly in ohms or fractions thereof to indicate the ground value of the ground rod or grounding systems under test.

(2) Submit the measured ground resistance of each ground rod and grounding system, indicating the location of the rod and grounding system. Include the test method and test setup (i.e., pin location) used to determine ground resistance and soil conditions at the time the measurements were made.

3.5.2 Follow-Up Verification

Upon completion of acceptance checks, settings, and tests, the Contractor shall show by demonstration in service that circuits and devices are in good operating condition and properly performing the intended function. Circuit breakers shall be tripped by operation of each protective device. Test shall require each item to perform its function not less than three times. As an exception to requirements stated elsewhere in the contract, the Contracting Officer shall be given 5 working days advance notice of the dates and times for checks, settings, and tests.

-- End of Section --

SECTION 16475

POWER SYSTEM

PART 1 GENERAL

1.1 REFERENCES

The publications listed below form a part of this specification to the extent referenced. The publications are referred to in the text by basic designation only.

Unless noted otherwise, all material used shall be in compliance with the requirements of the applicable German (DIN) Standards. In the event DIN Standard material is unavailable, contractor may then select comparable British Standard (BS), or Underwriters Laboratories Inc. (UL) listed material. Equipment enclosure types shall be in compliance with the National Electrical Manufacturer's Association (NEMA) or the International Electro-Technical Committee (IEC) standards. Material and equipment installed under this contract shall be for the appropriate application.

Unless otherwise specified or indicated, electrical and electronics terms used in these specifications and on the Drawings, shall be defined in DIN, I.E.C., BS or EN standards.

AMERICAN NATIONAL STANDARDS INSTITUTE (ANSI)

ANSI C12.11	(1987; R 1993) Instrument Transformers for Revenue Metering, 10 kV BIL through 350 kV BIL (0.6 kV NSV through 69 kV NSV)
ANSI C37.06	(1997) AC High-Voltage Circuit Breakers Rated on a Symmetrical Current Basis - Preferred Ratings and Related Required Capabilities for Switchgear
ANSI C37.16	(2000) Low-Voltage Power Circuit Breakers and AC Power Circuit Protectors - Preferred Ratings, Related Requirements, and Application Recommendations
ANSI C37.50	(1989; R 1995) Switchgear, Low-Voltage AC Power Circuit Breakers Used in Enclosures - Test Procedures

ASTM INTERNATIONAL (ASTM)

ASTM D 2472	(2000) Sulfur Hexafluoride

INSTITUTE OF ELECTRICAL AND ELECTRONICS ENGINEERS (IEEE)

IEEE C37.04	(1999) Rating Structure for AC High-Voltage Circuit Breakers Rated on a Symmetrical Current Basis
IEEE C37.13	(1990; R 1995) Low-Voltage AC Power

	Circuit Breakers Used in Enclosures
IEEE C37.20.1	(1993) Metal-Enclosed Low-Voltage Power Circuit-Breaker Switchgear
IEEE C57.13	(1993) Instrument Transformers

NATIONAL ELECTRICAL MANUFACTURERS ASSOCIATION (NEMA)

NEMA AB 1	(1999) Molded Case Circuit Breakers and Molded Case Switches
NEMA FU 1	(1986; R 1996) Low Voltage Cartridge Fuses
NEMA ICS 1	(2000) Industrial Control and Systems: General Requirements
NEMA ICS 2	(2000) Industrial Controls and Systems: Controllers, Contactors, and Overload Relays Rated Not More than 2000 Volts AC or 750 Volts DC
NEMA ICS 3	(1993) Industrial Control and Systems Factory Built Assemblies
NEMA ICS 6	(1993; R 2001) Industrial Control and Systems, Enclosures
NEMA SG 3	(1995) Power Switching Equipment
NEMA SG 5	(1995) Power Switchgear Assemblies

NATIONAL FIRE PROTECTION ASSOCIATION (NFPA)

NFPA 70	(2005) National Electrical Code

UNDERWRITERS LABORATORIES (UL)

UL 198B	(1995) Class H Fuses
UL 486E	(1994; Rev thru May 2000) Equipment Wiring Terminals for Use with Aluminum and/or Copper Conductors
UL 489	((1996; Rev thru Mar 2000) Molded-Case Circuit Breakers, Molded-Case Switches, and Circuit-Breaker Enclosures
UL 508	(1999; R 2002, Bul. 2001, 2002, 2003) Industrial Control Equipment
UL 845	(1995; Rev thru Apr 2004) Motor Control Centers
UL 877	(1993; Rev thru Nov 1999) Circuit Breakers and Circuit-Breaker Enclosures for Use in Hazardous (Classified) Locations

1.2 SUBMITTALS

Government approval is required for submittals with a "G" designation; submittals not having a "G" designation are for information only. When used, a designation following the "G" designation identifies the office that will review the submittal for the Government. The following shall be submitted in accordance with Section 01330 SUBMITTAL PROCEDURES:

SD-03 Product Data

Equipment; G

Data consisting of manufacturer's time-current characteristic curves for individual protective devices, recommended settings of adjustable protective devices, and recommended ratings of non-adjustable protective devices.

Protective Relays; G

Data shall including calibration and testing procedures and instructions pertaining to the frequency of calibration, inspection, adjustment, cleaning, and lubrication.

Installation; G

Procedures including diagrams, instructions, and precautions required to properly install, adjust, calibrate, and test the devices and equipment.

SD-06 Test Reports

Field Testing; G

The proposed test plan, prior to field tests. Plan shall consist of complete field test procedure including tests to be performed, test equipment required, and tolerance limits, including complete testing and verification of the ground fault protection equipment, where used. Performance test reports in booklet form showing all field tests performed to adjust each component and all field tests performed to prove compliance with the specified performance criteria, upon completion and testing of the installed system. Each test report shall indicate the final position of controls.

1.3 SYSTEM DESCRIPTION

The power system covered by this specification consists of: Diesel-generators, through step up transformers, deliver 15kV, 50 Hertz, through medium voltage switchgear to the facility underground power distribution feeder circuits.

High Voltage (15kV) Switchgear: Dead-front type (i.e. no live parts shall be exposed) switchgear shall consist of a Generator Bus and a Distribution Bus. Both buses shall be connected via a bus-tie circuit breaker. Distribution Bus shall be provided with a minimum of six (6) 15 kV feeder circuit breakers and one (1) spare 15 kV circuit breaker for future connection to commercial power. Minimum three (3) high voltage feeders each shall service initial KMTC loads. Circuit breakers shall be vacuum or SF-6 gas filled type. Each feeder breaker shall be furnish with, but not limited

to, necessary relays, ammeter, voltmeter, current and potential transformers, etc. for recording current and voltage readings. Concrete encased high voltage feeder cable get-a-ways (duct-bank) shall be provided from each breaker cubicles to outside manhole(s). Spare conduit shall be provided in each get-a-way duct-bank).

The 15 kV paralleling switchgear shall be of Russelectric manufacture and the following list shall not be considered all inclusive, but a list of typical components for a typical metal-clad, cubicle switchgear (quantity as indicated on drawings) lineup. The switchgear line-up shall be listed and labeled by U.L. under "Circuit Breakers and Metal-Clad Switchgear over 600 Volts (DLAH)". The switchgear line-up shall include the following:

Generator Circuit Breaker Cubicles (quantity as indicated on drawings with provisions for expansion of three (3) additional cubicles), each consisting of:

1 - Metal-clad enclosed cubicle
1 - 15,000 volt, 50 hz vacuum circuit breaker, 3 phase, 1200 amperes,stored energy, draw out type, arranged for operation on 48 VDC control power, with 500 MVA, 3 phase, interrupting rating. The power circuit breaker will be provided with short circuit protection, along with an anti-pump relay system, and automatic control system
1 - Set (2) potential transformers, ratio as required, fixed mounted type, with 15,000 volt primary and 220 volt secondary
1 - Multi-phase, time overcurrent relay with ground fault, (Note: ground fault CT furnished by others and mounted on the neutral to ground connection of the generator)
1 - Ground fault relay, Device #51G
1 - Set of (3) current transformers, ratio as required, for metering, relaying, etc.
1 - Set of 3 phase, 1200 amperes, insulated copper bus and ground bus. All joints to be silver plated
1 - Set of control wiring, fuses, fuse blocks, terminals, nameplates, etc. All wiring to be labeled at both ends. Wiring labels will match manufacturer's drawings
1 - Set of compression type lugs for customer's incoming generator connections

Operating Instructions: Contractor shall provide, mounted in a frame, a complete electrical one-line diagram of the power plant with detailed operating instruction. Instruction shall be mounted on a wall inside the switchgear room. Similarly, complete fuel and cooling system schematic diagrams shall also be provided in the switchgear room.

Operating Power Systems. Specification generally indicates that power supplies will be provided as required. The power supply output voltage will be that which is normally used by the switchgear/device manufacturer. Rack mounted gell cell sealed batteries are preferred, but if DC power with venting batteries are to be used, the manufacturer will install the power supply in a free standing enclosure near the switchgear. In either case, AC input will be provided. Charger will be of adjustable quick and trickle charge type. Input voltage will be 380V, 50HZ, AC. Output voltage will be as required by the manufacturer. Charger will be similar to that specified elsewhere in these specifications. Batteries will be series connected, 10 or 20 year rated of 200AH or greater as required by switchgear manufacturer. DC battery status/condition monitors are to be included. If non-sealed batteries are used, the enclosure is to include slide type

mounting racks, hardware, battery pads and acid resistant bottom plate and spillage/rupture battery acid catch basin. Lower portion of enclosure to include ventilated opening. Top of enclosure is to be ducted (PVC or Stainless Steel) for battery ventilation exhaust air to the switchboard room. Cabinet door to be hinged and latched at the top and bottom of the door.

1.4 QUALIFICATIONS

1.4.1 System Coordinator

System coordination, recommended ratings and settings of protective devices, and design analysis shall be accomplished by a registered professional electrical power engineer with a minimum of 3 years of current experience in the coordination of electrical power systems.

1.4.2 System Installer

Calibration, testing, adjustment, and placing into service of the protective devices shall be accomplished by a manufacturer's product field service engineer or independent testing company with a minimum of two years of current product experience in protective devices.

1.5 DELIVERY, STORAGE, AND HANDLING

Devices and equipment shall be visually inspected when received and prior to acceptance from conveyance. Stored items shall be protected from the environment in accordance with the manufacturer's published instructions. Damaged items shall be replaced.

1.6 PROJECT/SITE CONDITIONS

Devices and equipment furnished under this section shall be suitable for the following site conditions. Seismic details shall conform to Section 16070 SEISMIC PROTECTION FOR ELECTRICAL EQUIPMENT.

1.7 EXTRA MATERIALS

The following spare fuses or spare fuse elements shall be delivered to the Contracting officer when the electrical system is accepted:

FUSE TYPE/CLASS	VOLTAGE	CURRENT	NO. OF SPARES
RK1/RK5		600V	10% of system requirement

PART 2 PRODUCTS

2.1 STANDARD PRODUCT

Protective devices and equipment shall be the standard product of a manufacturer regularly engaged in the manufacture of the product and shall essentially duplicate items that have been in satisfactory utility type use for at least two years prior to bid opening.

Provide material and equipment shall be the standard product of a manufacturer regularly engaged in the manufacture of the product and shall essentially duplicate items that have been in satisfactory use for at least 2 years prior to bid opening. Items of the same classification shall be

identical including equipment, assemblies, parts and components.

2.2 NAMEPLATES

Nameplates shall be provided to identify all protective devices and equipment. Nameplate information shall be in accordance with NEMA AB 1, NEMA SG 3, NEMA SG 5, as applicable.

2.3 CORROSION PROTECTION

Metallic materials shall be protected against corrosion. Ferrous metal hardware shall be zinc-plated, chrome-plated , or painted.

2.4 MOTOR CONTROLS AND MOTOR CONTROL CENTERS

Motor controls and motor control centers shall be in accordance with NEMA ICS 1, NEMA ICS 2, NEMA ICS 3 and NEMA ICS 6, and UL 508 and UL 845.

2.4.1 Motor Starters

Combination starters shall be provided with circuit breakers as indicated.

2.4.2 Thermal-Overload Protection

Each motor of 93 W (1/8 hp) or larger shall be provided with thermal-overload protection. Polyphase motors shall have overload protection in each ungrounded conductor. The overload-protection device shall be provided either integral with the motor or controller, or shall be mounted in a separate enclosure. Unless otherwise specified, the protective device shall be of the manually reset type. Single or double pole tumbler switches specifically designed for alternating-current operation only may be used as manual controllers for single-phase motors having a current rating not in excess of 80 percent of the switch rating.

2.4.3 Low-Voltage Motor Overload Relays

2.4.3.1 General

Thermal overload relays shall conform to NEMA ICS 2 and UL 508. Overload protection shall be provided either integral with the motor or controller, and shall be rated in accordance with the requirements of NFPA 70 for the Power plant. Standard units shall be used for motor starting times up to 7 second.

2.4.3.2 Construction

Manual reset type thermal relays shall be bimetallic construction. Automatic reset type relays shall be bimetallic construction. Magnetic current relays shall consist of a contact mechanism and a dash pot mounted on a common frame.

2.4.3.3 Ratings

Voltage ratings shall be not less than the applicable circuit voltage. Trip current ratings shall be established by selection of the replaceable overload device and shall not be adjustable. Where the controller is remotely-located or difficult to reach, an automatic reset, non-compensated overload relay shall be provided. Manual reset overload relays shall be provided otherwise, and at all locations where automatic starting is

provided. Where the motor is located in a constant ambient temperature, and the thermal device is located in an ambient temperature that regularly varies by more than minus 10 degrees C, an ambient temperature-compensated overload relay shall be provided.

2.4.4 Automatic Control Devices

2.4.4.1 Direct Control

Automatic control devices (such as thermostats, float or pressure switches) which control the starting and stopping of motors directly shall be designed for that purpose and have an adequate kilowatt rating.

2.4.4.2 Pilot-Relay Control

Where the automatic-control device does not have such a rating, a magnetic starter shall be used, with the automatic-control device actuating the pilot-control circuit.

2.4.4.3 Manual/Automatic Selection

a. Where combination manual and automatic control is specified and the automatic-control device actuates the pilot control circuit of a magnetic starter, the magnetic starter shall be provided with a three-position selector switch marked MANUAL-OFF-AUTOMATIC.

b. Connections to the selector switch shall only allow the normal automatic regulatory control devices to be bypassed when the switch is in the Manual position; all safety control devices, such as low-or high-pressure cutouts, high-temperature cutouts, and motor-overload protective devices, shall be connected in the motor-control circuit in both the Manual and the Automatic positions of the selector switch. Control circuit connections to any MANUAL-OFF-AUTOMATIC switch or to more than one automatic regulatory control device shall be made in accordance with wiring diagram approved by the contracting Officer unless such diagram is included on the drawings. All controls shall be 120 volts or less unless otherwise indicated.

2.5 LOW-VOLTAGE FUSES

2.5.1 General

Low-voltage fuses shall conform to NEMA FU 1. Time delay and nontime delay options shall be as specified. Equipment provided under this contract shall be provided with a complete set of properly rated fuses when the equipment manufacturer utilizes fuses in the manufacture of the equipment, or if current-limiting fuses are required to be installed to limit the ampere-interrupting capacity of circuit breakers or equipment to less than the maximum available fault current at the location of the equipment to be installed. Fuses shall have a voltage rating of not less than the phase-to-phase circuit voltage, and shall have the time-current characteristics requires for effective power system coordination.

2.5.2 Cartridge Fuses; Noncurrent-Limiting Type

Cartridge fuses of the noncurrent-limiting type shall be Class H, nonrenewable, dual element, time lag type and shall have interrupting capacity of 10,000 amperes. Class H Fuses shall conform to UL 198B. At

500 percent current, cartridge fuses shall not blow in less than 10 seconds. Cartridge fuses shall be used for circuits rated in excess of 30 amperes, 125 volts, except where current-limiting fuses are indicated.

2.5.3 Motor and Transformer Circuit Fuses

2.5.3.1 Continuous Current Ratings (600 amperes and smaller)

Service entrance and feeder circuit fuses (600 amperes and smaller) shall be Class RK1, current-limiting, with 200,000 amperes interrupting capacity.

2.5.3.2 Motor and Transformer Circuit Fuses

Motor, motor controller, transformer, and inductive circuit fuses shall be Class RK1 or RK5.

2.6 MOLDED-CASE CIRCUIT BREAKERS

2.6.1 General

Molded-case circuit breakers shall conform to NEMA AB 1 and UL 489. Circuit breakers may be installed in panelboards, switchboards, enclosures, motor control centers, or combination motor controllers. Circuit breakers and circuit breaker enclosures located in hazardous (classified) areas shall conform to UL 877.

2.6.2 Construction

Molded-case circuit breakers shall be assembled as an integral unit in a supporting and enclosing housing of glass reinforced insulating material providing high dielectric strength. Circuit breakers shall be suitable for mounting and operating in any position. Lugs shall be listed for copper conductors only in accordance with UL 486E. Single-pole circuit breakers shall be full module size with not more than one pole per module. Multi-pole circuit breakers shall be of the common-trip type having a single operating handle such that an overload or short circuit on any one pole will result in all poles opening simultaneously. Sizes of 100 amperes or less may consist of single-pole breakers permanently factory assembled into a multi-pole unit having an internal, mechanical, nontamperable common-trip mechanism and external handle ties. All circuit breakers shall have a quick-make, quick-break overcenter toggle-type mechanism, and the handle mechanism shall be trip-free to prevent holding the contacts closed against a short-circuit or sustained overload. All circuit breaker handles shall assume a position between "ON" and "OFF" when tripped automatically. All ratings shall be clearly visible.

2.6.3 Ratings

Voltage ratings shall be not less than the applicable circuit voltage. The interrupting rating of the circuit breakers shall be at least equal to the available short-circuit current at the line terminals of the circuit breaker and correspond to the UL listed integrated short-circuit current rating specified for the panelboards and switchboards. Molded-case circuit breakers shall have nominal voltage ratings, maximum continuous-current ratings, and maximum short-circuit interrupting ratings in accordance with NEMA AB 1. Ratings shall be coordinated with system X/R ratio.

2.6.4 Cascade System Ratings

Circuit breakers used in series combinations shall be in accordance with UL 489. Equipment, such as switchboards and panelboards, which house series-connected circuit breakers shall be clearly marked accordingly. Series combinations shall be listed in the UL Recognized Component Directory under "Circuit Breakers-Series Connected."

2.6.5 Thermal-Magnetic Trip Elements

Thermal magnetic circuit breakers shall be provided as shown. Automatic operation shall be obtained by means of thermal-magnetic tripping devices located in each pole providing inverse time delay and instantaneous circuit protection. The instantaneous magnetic trip shall be adjustable and accessible from the front of all circuit breakers on frame sizes above 150 amperes.

2.6.6 Solid-State Trip Elements

Solid-state circuit breakers shall be provided as shown. All electronics shall be self-contained and require no external relaying, power supply, or accessories. Printed circuit cards shall be treated to resist moisture absorption, fungus growth, and signal leakage. All electronics shall be housed in an enclosure which provides protection against arcs, magnetic interference, dust, and other contaminants. Solid-state sensing shall measure true RMS current with error less than one percent on systems with distortions through the 13th harmonic. Peak or average actuating devices are not acceptable. Current sensors shall be toroidal construction, encased in a plastic housing filled with epoxy to protect against damage and moisture and shall be integrally mounted on the breaker. Where indicated on the drawings, circuit breaker frames shall be rated for 100 percent continuous duty. Circuit breakers shall have tripping features as shown on the drawings and as described below:

a. Long-time current pick-up, adjustable from 50 percent to 100 percent of continuous current rating.

b. Adjustable long-time delay.

c. Short-time current pick-up, adjustable from 1.5 to 9 times long-time current setting.

d. Adjustable short-time delay.

e. Short-time I square times t switch.

f. Instantaneous current pick-up, adjustable from 1.5 to 9 times long-time current setting.

g. Ground-fault pick-up, adjustable from 20 percent to 60 percent of sensor rating, but in no case greater than 1200 amperes. Sensing of ground-fault current at the main bonding jumper or ground strap shall not be permitted. Zone-selective interlocking shall be provided as shown.

h. Adjustable ground-fault delay.

i. Ground-fault I square times t switch.

j. Overload and Short-circuit and Ground-fault trip indicators shall be provided.

2.6.7 Current-Limiting Circuit Breakers

Current-limiting circuit breakers shall be provided as shown. Current-limiting circuit breakers shall limit the let-through I square times t to a value less than the I square times t of one-half cycle of the symmetrical short-circuit current waveform. On fault currents below the threshold of limitation, breakers shall provide conventional overload and short-circuit protection. Integrally-fused circuit breakers shall not be used.

2.6.8 SWD Circuit Breakers

Circuit breakers rated 20 amperes and intended to switch 380 volts or less fluorescent lighting loads shall be marked "SWD."

2.6.9 HACR Circuit Breakers

Circuit breakers 60 amperes or below, 240 volts, 1-pole or 2-pole, intended to protect multi-motor and combination-load installations involved in heating, air conditioning, and refrigerating equipment shall be marked "Listed HACR Type."

2.7 LOW-VOLTAGE POWER CIRCUIT BREAKERS

2.7.1 Construction

Low-voltage power circuit breakers shall conform to IEEE C37.13, ANSI C37.16, and NEMA SG 3 and shall be three-pole, single-throw, stored energy, electrically operated, with drawout mounting. Solid-state trip elements which require no external power connections shall be provided. Circuit breakers shall have an open/close contact position indicator, charged/discharged stored energy indicator, primary disconnect devices, and a mechanical interlock to prevent making or breaking contact of the primary disconnects when the circuit breaker is closed. Control voltage shall be as indicated. The circuit breaker enclosure shall be suitable for its intended location.

2.7.2 Ratings

Voltage ratings shall be not less than the applicable circuit voltage. Circuit breakers shall be rated for 100 percent continuous duty and shall have trip current ratings and frame sizes as shown. Nominal voltage ratings, maximum continuous-current ratings, and maximum short-circuit interrupting ratings shall be in accordance with ANSI C37.16. Tripping features shall be as follows:

a. Long-time current pick-up, adjustable from 50 percent to 100 percent of sensor current rating.

b. Adjustable long-time delay.

c. Short-time current pick-up, adjustable from 1.5 to 9 times long-time current setting.

d. Adjustable short-time delay.

e. Short-time I square times t switch.

f. Instantaneous current pick-up, adjustable from 1.5 to 9 times long-time current setting.

g. Ground-fault pick-up, adjustable from 20 percent to 60 percent of sensor rating, but in no case greater than 1200 amperes. Sensing of ground-fault current at the main bonding jumper or ground strap shall not be permitted. Zone-selective interlocking shall be provided as shown.

h. Adjustable ground-fault delay.

i. Ground-fault I square times t switch.

j. Overload and Short-circuit and Ground-fault trip indicators shall be provided.

2.8 MEDIUM-VOLTAGE CIRCUIT BREAKERS/INTERRUPTERS

2.8.1 Metal-Enclosed Type

Circuit breakers shall be of the drawout type, in accordance with IEEE C37.20.1 and NEMA SG 5.

2.8.2 Metal-Clad Type

Circuit breakers shall comply with IEEE C37.04 and shall consist of items listed for such units in NEMA SG 5.

2.8.3 SF6 Interrupters

SF6 interrupters shall be of the puffer type where the movement of the contact plunger will initiate the puff of SF6 gas across the contact to extinguish the arc at zero gauge tank pressure (atmospheric pressure). The puff of SF6 must be sufficient to clear an arc for 15 kV or lower class equipment and remain operational without damage or requiring maintenance or repair except for gas leaks. Breakers shall be provided with a loss-of-pressure alarm remote as shown on the drawings. Before the pressure in the container drops below the point where the breaker or switch cannot open safely without damage, the breaker shall activate the loss-of-pressure alarm, open automatically, and remain in the locked open position until repaired. If located inside a structure, breakers shall be located in a closed room with access only from outside, and provided with direct outdoor ventilation and a sensor unit which activates a vent fan and an alarm when a SF6 leak had occurred. The alarm will automatically be silenced when the oxygen in the room is above 19.5 percent. The SF6 shall meet the requirements of ASTM D 2472, except that the maximum dew point shall be minus 60 degrees C (corresponding to 11 ppm water by volume), with only 11 ppm water by volume, and the minimum purity shall be 99.9 percent by weight. Circuit breakers shall have provisions for maintenance slow closing of contacts and have a readily accessible contact wear indicator. Tripping time shall not exceed five cycles.

2.8.4 Vacuum Interrupters

Vacuum interrupters shall be hermetically-sealed in a high vacuum to protect contact from moisture and contamination. Circuit breakers shall have provisions for closing of contacts and have a readily contact wear

indicator. Tripping time shall not exceed five cycles.

2.8.5 Ratings

Main buses shall be three-phase three-wire with a continuous current rating of 1200 amperes rms. The neutral bus shall be rated for 1200 amperes, continuous. Switchgear ratings at 50 Hz shall be in accordance with ANSI C37.06 and as follows:

Maximum voltage.....15 kV

Nominal voltage class.....15 kV

BIL.....90 kV

Maximum symmetrical interrupting capacity.....40,000

3-second short-time-current carrying capacity.....as shown

Rated continuous current.....as shown

Frequency.....50 Hertz

2.9 INSTRUMENT TRANSFORMERS

2.9.1 General

Instrument transformers shall comply with ANSI C12.11 and IEEE C57.13. Instrument transformers shall be configured for mounting in/on the device to which they are applied. Polarity marks on instrument transformers shall be visually evident and shown on the drawings.

2.9.2 Current Transformers

Unless otherwise indicated, bar, wound, or window-type transformers are acceptable; and except for window-type units installed over insulated buses, transformers shall have a BIL rating consistent with the rated BIL of the associated switchgear or electric power apparatus bushings, buses or conductors. Current transformers shall have the indicated ratios. The continuous thermal-current rating factor shall be not less than 1.5. Other thermal and mechanical ratings of current transformers and their primary leads shall be coordinated with the design of the circuit breaker and shall be not less than the momentary rating of the associated circuit breaker. Circuit protectors shall be provided across secondary leads of the current transformers to prevent the accidental open-circuiting of the transformers while energized. Each terminal of each current transformer shall be connected to a short-circuiting terminal block in the circuit interrupting mechanism cabinet, power transformer terminal cabinet, and in the associated instrument and relay cabinets.

2.9.2.1 Current Transformers for Metal-Clad Switchgear

Single-ratio units, used for metering and relaying, shall have a metering accuracy class rating of as per manufactruer's ratings. Single-ratio units, used only for relaying, shall have a relaying accuracy class rating of as per manufactruer's ratings.

2.9.2.2 Voltage Transformers

Voltage transformers shall have indicated ratios. Units shall have an accuracy rating of 1,2. Voltage transformers shall be of the drawout type having current-limiting fuses in both primary and secondary circuits. Mechanical interlocks shall prevent removal of fuses, unless the associated voltage transformer is in a drawout position. Voltage transformer compartments shall have hinged doors.

PART 3 EXECUTION

3.1 VERIFICATION OF DIMENSIONS

After becoming familiar with details of the work, the Contractor shall verify dimensions in the field, and shall advise the Contracting Officer of any discrepancy before performing any work.

3.2 INSTALLATION

Protective devices shall be installed in accordance with the manufacturer's published instructions and in accordance with the requirements of NFPA 70 for the Power plant.

3.3 FIELD TESTING

3.3.1 General

Field testing shall be performed in the presence of the Contracting Officer. The Contractor shall notify the Contracting Officer prior to conducting tests. The Contractor shall furnish all materials, labor, and equipment necessary to conduct field tests. The Contractor shall perform all tests and inspections recommended by the manufacturer unless specifically waived by the Contracting Officer. The Contractor shall maintain a written record of all tests which includes date, test performed, personnel involved, devices tested, serial number and name of test equipment, and test results.

3.3.2 Safety

The Contractor shall provide and use safety devices such as rubber gloves, protective barriers, and danger signs to protect and warn personnel in the test vicinity. The Contractor shall replace any devices or equipment which are damaged due to improper test procedures or handling.

3.3.3 Molded-Case Circuit Breakers

Circuit breakers shall be visually inspected, operated manually, and connections checked for tightness. Current ratings shall be verified and adjustable settings incorporated in accordance with the coordination study.

3.3.4 Power Circuit Breakers

3.3.4.1 General

The Contractor shall visually inspect the circuit breaker and operate the circuit breaker manually; adjust and clean primary contacts in accordance with manufacturer's published instructions; check tolerances and clearances; check for proper lubrication; and ensure that all connections are tight. For electrically operated circuit breakers, the Contractor

shall verify operating voltages on closing and tripping coils. The Contractor shall verify fuse ratings in control circuits; electrically operate the breaker, where applicable; and implement settings in accordance with the coordination study.

3.3.4.2 Power Circuit Breaker Tests

The following power circuit breakers shall be tested in accordance with ANSI C37.50.

3.3.5 Protective Relays

Protective relays shall be visually and mechanically inspected, adjusted, tested, and calibrated in accordance with the manufacturer's published instructions. Tests shall include pick-up, timing, contact action, restraint, and other aspects necessary to ensure proper calibration and operation. Relay settings shall be implemented in accordance with the coordination study. Relay contacts shall be manually or electrically operated to verify that the proper breakers and alarms initiate. Relaying current transformers shall be field tested in accordance with IEEE C57.13.

-- End of Section --

SECTION 16510

INTERIOR LIGHTING

PART 1 GENERAL

1.1 REFERENCES

The publications listed below form a part of this specification to the extent referenced. The publications are referred to in the text by the basic designation only.

Unless noted otherwise, all material used shall be in compliance with the requirements of the applicable German (DIN) Standards. In the event DIN Standard material is unavailable, contractor may then select comparable British Standard (BS), or Underwriters Laboratories Inc. (UL) listed material. Equipment enclosure types shall be in compliance with the National Electrical Manufacturer's Association (NEMA) or the International Electro-Technical Committee (IEC) standards. Material and equipment installed under this contract shall be for the appropriate application.

ASTM INTERNATIONAL (ASTM)

ASTM A 580/A 580M	(1998) Stainless Steel Wire
ASTM A 641/A 641M	(1998) Zinc-Coated (Galvanized) Carbon Steel Wire
ASTM A 653/A 653M	(2001a) Steel Sheet, Zinc-Coated (Galvanized) or Zinc-Iron Alloy-Coated (Galvannealed) by the Hot-Dip Process
ASTM A 1008/A 1008M	(2002) Specification for Steel, Sheet, Cold-Rolled, Carbon Structural, High-Strength Low-Alloy with Improved Formability
ASTM B 633	(1998; E 2001) Electrodeposited Coatings of Zinc on Iron and Steel

BRITISH STANDARDS INSTITUTION (BSI)

BS 4533	(1990) Luminaires
BS 4533-102.1	Luminaires. Particular requirements. Specification for Fixed General Purpose Luminaires
BS EN 60598	(2004) Luminaires

DUETSCHES INSTITUTE FUR NORMUNG (DIN)

DIN 49780	(1983) Interior Luminaires: length of supply lead for portable luminaires and total length of pendant luminaires

EUROPEAN COMMITTEE FOR STANDARDIZATION (CEN)

EN 60598-2-1	(2001a) Steel Sheet, Zinc-Coated (Galvanized) or Zinc-Iron Alloy-Coated (Galvannealed) by the Hot-Dip Process

INTERNATIONAL ELECTROTECHNICAL COMMISSION (IEC)

IEC 60079-10	(2000) Electrical Apparatus for Explosive Gas Atmospheres
IEC 60598	(2003) Luminaires

NATIONAL FIRE PROTECTION ASSOCIATION (NFPA)

NFPA 70	(2005) National Electrical Code
NFPA 101	(2000) Life Safety Code

UNDERWRITERS LABORATORIES (UL)

UL 924	(1995; R 2001, Bul. 2000, 2001 and 2002) Emergency Lighting and Power Equipment
UL 935	(2001; Bul. 2000 and 2001) Fluorescent-Lamp Ballasts
UL 1598	(2000; Bul. 2000 and 2001) Luminaires

1.2 DEFINITIONS

1.2.1 Average Life

Time after which 50 percent will have failed and 50 percent will have survived under normal conditions.

1.2.2 Total Harmonic Distortion (THD)

The root mean square (RMS) of all the harmonic components divided by the total fundamental current.

1.2.3 I.E.C. Zones

The I.E.C. has defined 3 areas of hazardous gas or vapor release as follows:

Zone 0: Area in which an explosive mixture of gas, vapor, or mist is continuously present.

Zone 1: Zone in which an explosive mixture of gas, vapor, or mist is likely to occur during normal operation.

Zone 2: Zone in which an explosive mixture is not likely to occur in normal operation and if it occurs will only exist for a short time (leaks or maintenance).

1.3 SUBMITTALS

Government approval is required for submittals with a "G" designation;

submittals not having a "G" designation are for information only. When used, a designation following the "G" designation identifies the office that will review the submittal for the Government. The following shall be submitted in accordance with Section 01330 SUBMITTAL PROCEDURES:

SD-03 Product Data

Fluorescent lighting fixtures

Fluorescent electromagnetic ballasts

Exit signs

1.4 QUALITY ASSURANCE

1.4.1 Lighting Fixtures, Complete With Lamps and Ballasts

Submit one sample of each fixture type and large order item for inspection, review, and approval. The sample shall be retained for comparison against the remainder of the fixtures. The sample may be used in the final fixture installation.

PART 2 PRODUCTS

2.1 FLUORESCENT LIGHTING FIXTURES

UL 1598, IEC 60598, BS EN 60598, DIN 49780, or BS 4533. Fluorescent fixtures shall have magnetic ballasts unless specifically indicated otherwise.

2.1.1 Fluorescent Electromagnetic Ballasts

UL 935, BS 4533-102.1, EN 60598-2-1. Ballasts shall be standard high power factor type electromadnetic ballasts and shall be designed to operate on the voltage system to which they are connected. Provide three lamp fixtures with two ballasts per fixture.

Fixtures indicated for use in toilet rooms or other areas subject to exposure to water shall be rated for use in wet areas, per DIN, BS or EN standards.

2.2 SUSPENDED FIXTURES

ASTM A 580/A 580M or ASTM A 641/A 641M. Provide hangers capable of supporting twice the combined weight of fixtures supported by hangers.

2.3 EXIT SIGNS

UL 924, NFPA 70, and NFPA 101.

2.3.1 Self-Powered LED Type Exit Signs (Battery Backup)

Provide with automatic power failure device, test switch, pilot light, and fully automatic high/low trickle charger in a self-contained power pack. Battery shall be sealed electrolyte type, shall operate unattended, and require no maintenance, including no additional water, for a period of not less than 5 years. LED exit sign shall have emergency run time of 1 1/2 hours (minimum). The light emitting diodes shall have rated lamp life of 70,000 hours (minimum).

2.4 SUPPORT HANGERS FOR LIGHTING FIXTURES IN SUSPENDED CEILINGS

2.4.1 Wires

ASTM A 641/A 641M, Galvanized regular coating.

2.4.2 Straps

Galvanized steel, conforming to ASTM A 653/A 653M, with a light commercial zinc coating or ASTM A 1008/A 1008M with an electrodeposited zinc coating conforming to ASTM B 633, Type RS.

2.4.3 Rods

Threaded steel rods.

2.5 LIGHT SWITCHES

Provide explosion-proof switches per DIN, IEC 60079-10, BS, or EN standards for I.E.C. Zone 0 or 1 installations.

Enclose switches that have arcing contacts in explosion-proof housings. Enclosures for these locations must prevent the ignition of an explosive gas or vapor that may surround it. An explosion inside the enclosure shall not start a larger explosion outside. Each enclosure shall have adequate strength to resist explosive force and be flame-tight. The enclosures are not hermetically sealed, but that hot gases resulting from an internal explosion are cooled so that by the time they reach the outside hazardous atmosphere, they are too cool to affect ignition. Openings in an explosion-proof enclosure can be threaded-joint type or flat-joint type.

2.6 LIGHTING FIXTURE SCHEDULE

Light fixture shall be as follows:

1) Fixture A
   Type: Pendant mounted industrial fluorescent Light fixture with wide distribution reflector kit (2 Lamps)
   Lamp: T8/36w
   Volts: 220V
2) Fixture A1
   Type: Surface mounted industrial fluorescent Light fixture with wide distribution reflector kit (2 Lamps)
   Lamp: T8/36w
   Volts: 220V
3) Fixture B
   Type: Surface mounted with prismatic diffuser(2 Lamps)
   Lamp: T8/36w
   Volts: 220V

4) Fixture C
   Type: Pendant mounted industrial (fluorescent light fixture with reflector and acrylic lens (4 Lamps)
   Lamp: T8/36w
   Volts: 220V
5) Fixture C1
   Type: Surface mounted industrial fluorescet light fixture with reflector and acrylic lens (4 Lamps)
   Lamp: T8/36w

Volts: 220V

6) Fixture D
Type: Recessed/grid mounted fixture with acrylicl lens (4 Lamps)
Lamp: T8/36w
Volts: 220V

7) Fixture D1
Type: Recessed/grid mounted fixture for wet locations (4 Lamps)
Lamp: T8/36w
Volts: 220V

8) Fixture E
Type: Surface wall mounted fixture for wet locations (2 Lamps)
Lamp: T8/36w
Volts: 220V

9) Fixture F
Type: Wall mounted compact fluor. vapolets fixture for pits (2 Lamps)
Lamp: CF/26w
Volts: 220V

10) Fixture G
Type: Pendant mounted industrial low bay fixture (1 Lamp)
Lamp: HPS/150w
Volts: 220V

11) Fixture G1
Type: Pendant mounted industrial high bay fixture (1 Lamp)
Lamp: HPS/150w
Volts: 220V

12) Fixture I
Type: Wall mounted fluor. strip fixture for damp location (2 Lamps)
Lamp: TB/36w
Volts: 220V

13) Fixture J
Type: Surface mounted fluor. explosion proof fixture (2 Lamps)
Lamp: 36w
Volts: 220V

14) Fixture X1
Type: Exit sign with directional arrows as required (2 Lamps)
Lamp: 8w
Volts: 220V

15) Fixture X2
Type: Remote battery emergency fixture with halogen lamps (2 Lamps)
Lamp: Halogen/20w
Volts: 220V

PART 3 EXECUTION

3.1 INSTALLATION

3.1.1 Lamps

Lamps of the type, wattage, and voltage rating indicated shall be delivered to the project in the original cartons and installed just prior to project completion. Lamps installed and used for working light during construction

shall be replaced prior to turnover to the Government if more than 15 percent of their rated life has been used. Lamps shall be tested for proper operation prior to turn-over and shall be replaced if necessary with new lamps from the original manufacturer. Provide 10 percent spare lamps of each type from the original manufacturer.

3.1.2 Ballasts

As per manufacturer's recommedation

3.1.3 Exit Signs

Wire exit signs ahead of the switch to the normal lighting circuit located in the same room or area.

-- End of Section --

SECTION 16710

BUILDING TELECOMMUNICATIONS CABLING SYSTEM

PART 1 GENERAL

1.1 REFERENCES

The publications listed below form a part of this specification to the extent referenced. The publications are referred to within the text by the basic designation only.

ASTM INTERNATIONAL (ASTM)

ASTM D 709	(2001) Laminated Thermosetting Materials

ELECTRONIC INDUSTRIES ALLIANCE (EIA)

EIA TIA-455-21-A	(1988) FOTP-21 - Mating Durability of Fiber Optic Interconnecting Devices
EIA TIA/EIA-526-7	(1998) OFSTP-7 Measurement of Optical Power Loss of Installed Single-Mode Fiber Cable Plant (ANSI/TIA/EIA-526-7)
EIA TIA/EIA-568-B.1	(2001; Addendum 2001) Commercial Building Telecommunications Cabling Standard - Part 1: General Requirements (ANSI/TIA/EIA-568-B.1)
EIA TIA/EIA-568-B.2	(2001) Commercial Building Telecommunications Cabling Standard - Part 2: Balanced Twisted Pair Cabling Components (ANSI/TIA/EIA-568-B.2)
EIA TIA/EIA-568-B.3	(2000; Addendum 2002) Optical Fiber Cabling Components Standard (ANSI/TIA/EIA-568-B.3)
EIA TIA/EIA-569-A	(1998; Addenda 2000, 2001) Commercial Building Standards for Telecommunications Pathways and Spaces (ANSI/TIA/EIA-569-A)
EIA TIA/EIA-570-B	(2004) Residential Telecommunications Infrastructure
EIA TIA/EIA-604-3A	(2000) FOCIS 3 Fiber Optic Connector Intermateability Standard - Standard Type SC
EIA TIA/EIA-606-A	(2002) Administration Standard for the Telecommunications Infrastructure (ANSI/TIA/EIA-606)
EIA-310-D	(1992) Racks, Panels, and Associated Equipment

TIA J-STD-607-A	(2002) Commercial Building Grounding (Earthing) and Bonding Requirements for Telecommunications

INSTITUTE OF ELECTRICAL AND ELECTRONICS ENGINEERS (IEEE)

IEEE Std 100	(2000) The Authoritave Dictionary of IEEE Standards Terms

NATIONAL FIRE PROTECTION ASSOCIATION (NFPA)

NFPA 70	(2005) National Electrical Code

U.S. FEDERAL COMMUNICATIONS COMMISSION (FCC)

FCC Part 68	Connection of Terminal Equipment to the Telephone Network (47 CFR 68)

UNDERWRITERS LABORATORIES (UL)

UL 1863	(2004) Communication Circuit Accessories
UL 444	(2002; Rev thru Aug 2002) Communications Cables
UL 467	(2004) Grounding and Bonding Equipment
UL 50	(1995; Rev thru Sep 2003) Enclosures for Electrical Equipment
UL 514C	(1996; Rev thru Nov 2002) Nonmetallic Outlet Boxes, Flush-Device Boxes, and Covers
UL 969	(1995; Rev thru Nov 2001) Marking and Labeling Systems

1.2 RELATED REQUIREMENTS

Section 16402 INTERIOR DISTRIBUTION SYSTEM and Section 16711 TELECOMMUNICATIONS, OUTSIDE PLANT, apply to this section with additions and modifications specified herein.

1.3 DEFINITIONS

Unless otherwise specified or indicated, electrical and electronics terms used in this specification shall be as defined in EIA TIA/EIA-568-B.1, EIA TIA/EIA-568-B.2, EIA TIA/EIA-568-B.3, EIA TIA/EIA-569-A, EIA TIA/EIA-606-A and IEEE Std 100 and herein.

1.3.1 Campus Distributor (CD)

A distributor from which the campus backbone cabling emanates. (International expression for main cross-connect (MC).)

1.3.2 Building Distributor (BD)

A distributor in which the building backbone cables terminate and at which

connections to the campus backbone cables may be made. (International expression for intermediate cross-connect (IC).)

1.3.3 Floor Distributor (FD)

A distributor used to connect horizontal cable and cabling subsystems or equipment. (International expression for horizontal cross-connect (HC).)

1.3.4 Telecommunications Room (TR)

An enclosed space for housing telecommunications equipment, cable, terminations, and cross-connects. The room is the recognized cross-connect between the backbone cable and the horizontal cabling.

1.3.5 Entrance Facility (EF) (Telecommunications)

An entrance to the building for both private and public network service cables (including antennae) including the entrance point at the building wall and continuing to the entrance room or space.

1.3.6 Entrance Room (ER) (Telecommunications)

A centralized space for telecommunications equipment that serves the occupants of a building. Equipment housed therein is considered distinct from a telecommunications room because of the nature of its complexity.

1.3.7 Open Cable

Cabling that is not run in a raceway as defined by NFPA 70. This refers to cabling that is "open" to the space in which the cable has been installed and is therefore exposed to the environmental conditions associated with that space.

1.3.8 Open Office

A floor space division provided by furniture, moveable partitions, or other means instead of by building walls.

1.3.9 Pathway

A physical infrastructure utilized for the placement and routing of telecommunications cable.

1.4 SYSTEM DESCRIPTION

The building telecommunications cabling and pathway system shall include permanently installed backbone and horizontal cabling, horizontal and backbone pathways, service entrance facilities, work area pathways, telecommunications outlet assemblies, conduit, raceway, and hardware for splicing, terminating, and interconnecting cabling necessary to transport telephone and data (including LAN) between equipment items in a building. The horizontal system shall be wired in a star topology from the telecommunications work area to the floor distributor or campus distributor at the center or hub of the star. The backbone cabling and pathway system includes intrabuilding and interbuilding interconnecting cabling, pathway, and terminal hardware. The intrabuilding backbone provides connectivity from the floor distributors to the building distributors or to the campus distributor and from the building distributors to the campus distributor as required.. The backbone system shall be wired in a star topology with the

campus distributor at the center or hub of the star. The interbuilding backbone system provides connectivity between the campus distributors and is specified in Section 16711, TELECOMMUNICATIONS OUTSIDE PLANT. Provide telecommunications pathway systems referenced herein as specified in Section 16402 INTERIOR DISTRIBUTION SYSTEM.

1.5 SUBMITTALS

Government approval is required for submittals with a "G" designation; submittals not having a "G" designation are for information only. When used, a designation following the "G" designation identifies the office that will review the submittal for the Government. The following shall be submitted in accordance with Section 01330 SUBMITTAL PROCEDURES:

SD-02 Shop Drawings

Telecommunications drawings; G TAC

Telecommunications Space Drawings; G TAC

In addition to Section 01330 SUBMITTAL PROCEDURES, provide shop drawings in accordance with paragraph SHOP DRAWINGS.

SD-03 Product Data

Telecommunications cabling (backbone and horizontal); G TAC

Patch panels; G TAC

Telecommunications outlet/connector assemblies; G TAC

Equipment support frame; G TAC

Connector blocks; G TAC

Spare Parts; G TAC

Submittals shall include the manufacturer's name, trade name, place of manufacture, and catalog model or number. Include performance and characteristic curves. Submittals shall also include applicable federal, military, industry, and technical society publication references. Should manufacturer's data require supplemental information for clarification, the supplemental information shall be submitted as specified in paragraph REGULATORY REQUIREMENTS and as required in Section 01330 SUBMITTAL PROCEDURES.

SD-06 Test Reports

Telecommunications cabling testing; G TAC

SD-07 Certificates

Telecommunications Contractor Qualifications; G TAC

Key Personnel Qualifications; G TAC

Manufacturer Qualifications; G TAC

Test plan; G TAC

SD-09 Manufacturer's Field Reports

Factory reel tests; G TAC

SD-11 Closeout Submittals

Record Documentation; G TAC

1.6 QUALITY ASSURANCE

1.6.1 Shop Drawings

In exception to Section 01330, SUBMITTAL PROCEDURES, submit shop drawings a minimum of 355 by 510 mm (14 by 20 inches) in size using a minimum scale of one mm per 100 mm (1/8 inch per foot) except as specified otherwise. Include wiring diagrams and installation details of equipment indicating proposed location, layout and arrangement, control panels, accessories, piping, ductwork, and other items that must be shown to ensure a coordinated installation. Wiring diagrams shall identify circuit terminals and indicate the internal wiring for each item of equipment and the interconnection between each item of equipment. Drawings shall indicate adequate clearance for operation, maintenance, and replacement of operating equipment devices. Submittals shall include the nameplate data, size, and capacity. Submittals shall also include applicable federal, military, industry, and technical society publication references.

1.6.1.1 Telecommunications Drawings

Provide drawings in accordance with EIA TIA/EIA-606-A. The identifier for each termination and cable shall appear on the drawings. Drawings shall depict final telecommunications installed wiring system infrastructure in accordance with EIA TIA/EIA-606-A. The drawings should provide details required to prove that the distribution system shall properly support connectivity from the EF telecommunications and ER telecommunications, CD's, BD's, and FD's to the telecommunications work area outlets. The following drawings shall be provided as a minimum:

a. T1 - Layout of complete building per floor - Building Area/Serving Zone Boundaries, Backbone Systems, and Horizontal Pathways. Layout of complete building per floor. The drawing indicates ocation of building areas, serving zones, vertical backbone diagrams, telecommunications rooms, access points, pathways, grounding system, and other systems that need to be viewed from the complete building perspective.

b. T2 - Serving Zones/Building Area Drawings - Drop Locations and Cable Identification (ID’S). Shows a building area or serving zone. These drawings show drop locations, telecommunications rooms, access points and detail call outs for common equipment rooms and other congested areas.

c. T4 - Typical Detail Drawings - Faceplate Labeling, Firestopping, Americans with Disabilities Act (ADA), Safety, Department of Transportation (DOT). Detailed drawings of symbols and typicals such as faceplate labeling, faceplate types, faceplate population installation procedures, detail racking, and raceways.

1.6.1.2 Telecommunications Space Drawings

Provide T3 drawings in accordance with EIA TIA/EIA-606-A that include telecommunications rooms plan views, pathway layout (cable tray, racks, ladder-racks, etc.), mechanical/electrical layout, and cabinet, rack, backboard and wall elevations. Drawings shall show layout of applicable equipment including incoming cable stub or connector blocks, building protector assembly, outgoing cable connector blocks, patch panels and equipment spaces and cabinet/racks. Drawings shall include a complete list of equipment and material, equipment rack details, proposed layout and anchorage of equipment and appurtenances, and equipment relationship to other parts of the work including clearance for maintenance and operation. Drawings may also be an enlargement of a congested area of T1 or T2 drawings.

1.6.2 Telecommunications Qualifications

Work under this section shall be performed by and the equipment shall be provided by the approved telecommunications contractor and key personnel. Qualifications shall be provided for: the telecommunications system contractor, the telecommunications system installer, and the supervisor (if different from the installer). A minimum of 30 days prior to installation, submit documentation of the experience of the telecommunications contractor and of the key personnel.

1.6.2.1 Telecommunications Contractor

The telecommunications contractor shall be a firm which is regularly and professionally engaged in the business of the applications, installation, and testing of the specified telecommunications systems and equipment. The telecommunications contractor shall demonstrate experience in providing successful telecommunications systems within the past 5 years. Submit documentation for a minimum of three and a maximum of five successful telecommunication system installations for the telecommunications contractor.

1.6.2.2 Key Personnel

Provide key personnel who are regularly and professionally engaged in the business of the application, installation and testing of the specified telecommunications systems and equipment. There may be one key person or more key persons proposed for this solicitation depending upon how many of the key roles each has successfully provided. Each of the key personnel shall demonstrate experience in providing successful telecommunications systems within the past 3 years.

Supervisors and installers assigned to the installation of this system or any of its components shall be Building Industry Consulting Services International (BICSI) Registered Cabling Installers, Technician Level. Submit documentation of current BICSI certification for each of the key personnel.

In lieu of BICSI certification, supervisors and installers assigned to the installation of this system or any of its components shall have a minimum of 5 years experience in the installation of the specified copper and fiber optic cable and components. They shall have factory or factory approved certification from each equipment manufacturer indicating that they are qualified to install and test the provided products. Submit documentation for a minimum of three and a maximum of five successful telecommunication

system installations for each of the key personnel. Documentation for each key person shall include at least two successful system installations provided that are equivalent in system size and in construction complexity to the telecommunications system proposed for this solicitation. Include specific experience in installing and testing telecommunications systems and provide the names and locations of at least two project installations successfully completed using optical fiber and copper telecommunications cabling systems. All of the existing telecommunications system installations offered by the key persons as successful experience shall have been in successful full-time service for at least 18 months prior to the issuance date for this solicitation. Provide the name and role of the key person, the title, location, and completed installation date of the referenced project, the referenced project owner point of contact information including name, organization, title, and telephone number, and generally, the referenced project description including system size and construction complexity.

Indicate that all key persons are currently employed by the telecommunications contractor, or have a commitment to the telecommunications contractor to work on this project. All key persons shall be employed by the telecommunications contractor at the date of issuance of this solicitation, or if not, have a commitment to the telecommunications contractor to work on this project by the date that the bid was due to the Contracting Officer.

Note that only the key personnel approved by the Contracting Officer in the successful proposal shall do work on this solicitation's telecommunications system. Key personnel shall function in the same roles in this contract, as they functioned in the offered successful experience. Any substitutions for the telecommunications contractor's key personnel requires approval from The Contracting Officer.

1.6.2.3 Minimum Manufacturer Qualifications

Cabling, equipment and hardware manufacturers shall have a minimum of 3 years experience in the manufacturing, assembly, and factory testing of components which comply with EIA TIA/EIA-568-B.1, EIA TIA/EIA-568-B.2 and EIA TIA/EIA-568-B.3.

1.6.3 Test Plan

Provide a complete and detailed test plan for the telecommunications cabling system including a complete list of test equipment for the UTP and optical fiber components and accessories 60 days prior to the proposed test date. Include procedures for certification, validation, and testing.

1.6.4 Regulatory Requirements

In each of the publications referred to herein, consider the advisory provisions to be mandatory, as though the word, "shall" had been substituted for "should" wherever it appears. Interpret references in these publications to the "authority having jurisdiction," or words of similar meaning, to mean the Contracting Officer. Equipment, materials, installation, and workmanship shall be in accordance with the mandatory and advisory provisions of NFPA 70 unless more stringent requirements are specified or indicated.

1.6.5 Standard Products

Provide materials and equipment that are products of manufacturers regularly engaged in the production of such products which are of equal material, design and workmanship. Products shall have been in satisfactory commercial or industrial use for 2 years prior to bid opening. The 2-year period shall include applications of equipment and materials under similar circumstances and of similar size. The product shall have been on sale on the commercial market through advertisements, manufacturers' catalogs, or brochures during the 2-year period. Where two or more items of the same class of equipment are required, these items shall be products of a single manufacturer; however, the component parts of the item need not be the products of the same manufacturer unless stated in this section.

1.6.5.1 Alternative Qualifications

Products having less than a 2-year field service record will be acceptable if a certified record of satisfactory field operation for not less than 6000 hours, exclusive of the manufacturers' factory or laboratory tests, is furnished.

1.6.5.2 Material and Equipment Manufacturing Date

Products manufactured more than 3 years prior to date of delivery to site shall not be used, unless specified otherwise.

1.7 DELIVERY AND STORAGE

Provide protection from weather, moisture, extreme heat and cold, dirt, dust, and other contaminants for telecommunications cabling and equipment placed in storage.

1.8 ENVIRONMENTAL REQUIREMENTS

Connecting hardware shall be rated for operation under ambient conditions of 0 to 60 degrees C (32 to 140 degrees F) and in the range of 0 to 95 percent relative humidity, noncondensing.

1.9 WARRANTY

The equipment items shall be supported by service organizations which are reasonably convenient to the equipment installation in order to render satisfactory service to the equipment on a regular and emergency basis during the warranty period of the contract.

1.10 MAINTENANCE

1.10.1 Operation and Maintenance Manuals

Commercial off the shelf manuals shall be furnished for operation, installation, configuration, and maintenance of products provided as a part of the telecommunications cabling and pathway system. In addition to requirements of Section 01060 SPECIAL CLAUSES, include the requirements of paragraphs TELECOMMUNICATIONS DRAWINGS, TELECOMMUNICATIONS SPACE DRAWINGS, and RECORD DOCUMENTATION.

1.10.2 Record Documentation

Provide T5 drawings including documentation on cables and termination

hardware in accordance with EIA TIA/EIA-606-A. T5 drawings shall include schedules to show information for cut-overs and cable plant management, patch panel layouts and cover plate assignments, cross-connect information and connecting terminal layout as a minimum. T5 drawings shall be provided in hard copy format. Provide the following T5 drawing documentation as a minimum:

a. Cables - A record of installed cable shall be provided in accordance with EIA TIA/EIA-606-A. The cable records shall include the required data fields for each cable and complete end-to-end circuit report for each complete circuit from the assigned outlet to the entry facility in accordance with EIA TIA/EIA-606-A. Include manufacture date of cable with submittal.

b. Termination Hardware - A record of installed patch panels, cross-connect points, distribution frames, terminating block arrangements and type, and outlets shall be provided in accordance with EIA TIA/EIA-606-A. Documentation shall include the required data fields as a minimum in accordance with EIA TIA/EIA-606-A.

1.10.3 Spare Parts

In addition to the requirements of Section 01781, OPERATION AND MAINTENANCE DATA, provide a complete list of parts and supplies, with current unit prices and source of supply, and a list of spare parts recommended for stocking.

PART 2 PRODUCTS

2.1 COMPONENTS

UL or third party certified. Where equipment or materials are specified to conform to industry and technical society reference standards of the organizations, submit proof of such compliance. The label or listing by the specified organization will be acceptable evidence of compliance. In lieu of the label or listing, submit a certificate from an independent testing organization, competent to perform testing, and approved by the Contracting Officer. The certificate shall state that the item has been tested in accordance with the specified organization's test methods and that the item complies with the specified organization's reference standard. Provide a complete system of telecommunications cabling and pathway components using star topology. Provide support structures and pathways, complete with outlets, cables, connecting hardware and telecommunications cabinets/racks. Cabling and interconnecting hardware and components for telecommunications systems shall be UL listed or third party independent testing laboratory certified, and shall comply with NFPA 70 and conform to the requirements specified herein.

2.2 TELECOMMUNICATIONS PATHWAY

Provide telecommunications pathways in accordance with EIA TIA/EIA-569-A and as specified in Section 16402 INTERIOR DISTRIBUTION SYSTEM.

2.3 TELECOMMUNICATIONS CABLING

Cabling shall be UL listed for the application and shall comply with EIA TIA/EIA-568-B.1, EIA TIA/EIA-568-B.2, EIA TIA/EIA-568-B.3 and NFPA 70. Provide a labeling system for cabling as required by EIA TIA/EIA-606-A and

UL 969. Ship cable on reels or in boxes bearing manufacture date for UTP in accordance with ICEA S-90-661 and optical fiber cables in accordance with ICEA S-83-596 for all cable used on this project. Cabling manufactured more than 12 months prior to date of installation shall not be used.

2.3.1 Horizontal Cabling

Provide horizontal cable in compliance with NFPA 70 and performance characteristics in accordance with EIA TIA/EIA-568-B.1.

2.3.1.1 Horizontal Copper

Provide horizontal copper cable in accordance with EIA TIA/EIA-568-B.2, UL 444, UTP (unshielded twisted pair), 100 ohm. Provide four each individually twisted pair, 24 AWG conductors, Category 5e, with a blue thermoplastic jacket. Cable shall be imprinted with manufacturers name or identifier, flammability rating, gauge of conductor, transmission performance rating (category designation) at regular intervals not to exceed 1 meter (3.3 feet). The word "METER" or the abbreviation "M" shall appear after each length marking. Provide communications general purpose (CM or CMG), communications plenum (CMP) or communications riser (CMR) rated cabling in accordance with NFPA 70. Type CMP and CMR may be substituted for type CM or CMG and type CMP may be substituted for type CMR in accordance with NFPA 70.

2.3.1.2 Horizontal Coaxial Cable

The coaxial cable shall be 75 ohm, RG 6 with an 18 AWG copper clad steel conductor, polyethylene outer insulation, 2.8 mil aluminum shield, 60% inner braid made of 34 AWG aluminum. The maximum attenuation shall be 5.2 dB @ 55 mHz, 10.1 dB @ 211 mHz, 11.4 dB @ 270 mHz, 12.7 dB @ 330 mHz, 14.1 dB @ 350 mHz, 15 dB @ 450, 15.8 @ 500 mHz, 16.7 dB @ 550 mHz, 17.5 dB @ 600 mHz, 19.6 dB @ 750 mHz, 21.3 dB @ 870 mHz, and 22.9 dB @ 1000 mHz.

2.4 TELECOMMUNICATIONS SPACES

Provide connecting hardware and termination equipment in the telecommunication communications cabinet (TCC) to facilitate installation as shown on design drawings for terminating and cross-connecting permanent cabling. Provide telecommunications interconnecting hardware color coding in accordance with EIA TIA/EIA-606-A.

2.4.1 Backboards for Wall Mounted Components Not in TCCs

Provide void-free, interior grade plywood 19 mm thick 1200 by 2400 mm . Backboards shall be fire rated. Do not cover the fire stamp on the backboard. Backboards shall be mounted 305 mm above finished floor and 305 mm below the ceiling.

2.4.2 Equipment Support Frame

Provide in accordance with EIA-310-D and UL 50.

a. Bracket, wall mounted, 11 gauge steel. Provide hinged swing down bracket compatible with 482.6 mm. Bracket shall be capable of holding 27.2 kg and be 8 units high.

b. Racks, floor mounted welded steel construction , minimum, treated

to resist corrosion. Provide rack with vertical and horizontal cable management channels, top and bottom cable troughs, grounding lug and a power strip with 9 receptacles. Rack shall be compatible with 482.6 mm panel mounting hardware.

2.4.3 Connector Blocks

Provide insulation displacement connector (IDC) Type 110 for Category 5e and higher. Provide blocks for the number of horizontal and backbone cables terminated on the block plus 25 percent spare.

2.4.4 Cable Guides

Provide cable guides specifically manufactured for the purpose of routing cables, wires and patch cords horizontally and vertically on 482.6 mm equipment racks. Cable guides of ring or bracket type devices mounted on backboard for horizontal cable management and individually mounted for vertical cable management. Mount cable guides with screws, and or nuts and lockwashers.

2.4.5 Patch Panels

Provide a minimum 24 port patch panel. Provide pre-connectorized RJ45-RJ45 copper patch cords for patch panels. Provide patch cords, as complete assemblies, with matching connectors. Patch cords shall meet minimum performance requirements specified in EIA TIA/EIA-568-B.1, EIA TIA/EIA-568-B.2 and EIA TIA/EIA-568-B.3 for cables, cable length and hardware specified. Provide one (1) patch cord per patch panel port.

2.4.5.1 Modular to 110 Block Patch Panel

Provide in accordance with EIA TIA/EIA-568-B.1 and EIA TIA/EIA-568-B.2. Panels shall be third party verified and shall comply with EIA/TIA Category 5e requirements. Panel shall be constructed of 2.2 mm (0.09 inch) minimum aluminum and shall be compatible with an EIA-310-D 482.6 mm equipment rails. Panel shall provide 24 non-keyed, 8-pin modular ports, wired to T568A. Patch panels shall terminate the building cabling on Type 110 IDCs and shall utilize a printed circuit board interface. The rear of each panel shall have incoming cable strain-relief and routing guides. Panels shall have each port factory numbered and be equipped with laminated plastic nameplates above each port. The patch panel shall be mounted on a swing down bracket.

2.4.5.2 Fiber Optic Patch Panel

See Section 16711 TELECOMMUNICATIONS OUTSIDE PLANT (OSP).

2.4.6 Coax Patch Panel

The coax patch panel shall be a minimu 16 port, 16 gauge steel, with 16, keystone module, type F female connectors. The coax panel shall be mounted on a swing down bracket. There shall be one coax patch cords, RG 6 Type F female per patch panel port. Commercial quality, signal splitters shall be provided and mounted to the backboard. One splitter port per patch panel port.

2.5 TELECOMMUNICATIONS OUTLET/CONNECTOR ASSEMBLIES

2.5.1 Outlet/Connector Copper

Outlet/connectors shall comply with FCC Part 68EIA TIA/EIA-568-B.1, and EIA TIA/EIA-568-B.2. UTP outlet/connectors shall be UL 1863 listed, non-keyed, 8-pin modular, constructed of high impact rated thermoplastic housing and shall be third party verified and shall comply with EIA TIA/EIA-568-B.2 Category 5e. Outlet/connectors provided for UTP cabling shall meet or exceed the requirements for the cable provided. Outlet/connectors shall be terminated using a Type 110 IDC PC board connector, color-coded for both T568A and T568B wiring. Each outlet/connector shall be wired T568A. UTP outlet/connectors shall comply with EIA TIA/EIA-568-B.2 for 200 mating cycles. The standard outlet configuration shall be a dual plate with either one, RJ45, Cat 5e keystone module and a blank or two RJ45 Cat 5e modules. The drawing indicates the configuration. Wall plates shall be stainless steel with mounting lugs and shall utilize the same keystone RJ45 module as the normal outlets.

2.5.2 Optical Fiber Adapters

Provide optical fiber adapters suitable for duplex SC in accordance with EIA TIA/EIA-604-3A with zirconia ceramic alignment sleeves,. Provide dust cover for adapters. Optical fiber adapters shall comply with EIA TIA-455-21-A for 500 mating cycles.

2.5.3 Optical Fiber Connectors

Provide in accordance with EIA TIA-455-21-A. Optical fiber connectors shall be duplex SC in accordance with EIA TIA/EIA-604-3A with zirconia ceramic ferrule, epoxyless compatible with 125 um single-mode fiber.

2.5.4 Coax Connectors

The coax connectors shall be keystone module, type F female and be mounted in a single gang, duplex plate with one filler plate.

2.5.5 Cover Plates

Telecommunications cover plates shall comply with UL 514C, and EIA TIA/EIA-568-B.1, EIA TIA/EIA-568-B.2, EIA TIA/EIA-568-B.3; flush design constructed of high impact thermoplastic material ivory in color. Provide labeling in accordance with the paragraph LABELING in this section. The outplate shall be duplex plates. Wall phone plates shall be stainless steel with phone mounting lugs.

2.6 TERMINAL CABINETS

Construct of zinc-coated sheet steel, 762 by 610 by 610 mm . Trim shall be fitted with hinged door and locking latch. Doors shall be maximum size openings to box interiors. Boxes shall be provided with 16 mm (5/8 inch) backboard with two-coat varnish finish. Match trim, hardware, doors, and finishes with panelboards. Provide label and identification systems for telecommunications wiring and components consistent with EIA TIA/EIA-606-A. Each cabinet shall be equipped with a hasp and lock. All locks shall be keyed the same.

2.7 GROUNDING AND BONDING PRODUCTS

Provide in accordance with UL 467, TIA J-STD-607-A, and NFPA 70. Components shall be identified as required by EIA TIA/EIA-606-A. Provide ground rods, bonding conductors, and grounding busbars as specified in Section 16402, INTERIOR DISTRIBUTION SYSTEM.

2.8 FIRESTOPPING MATERIAL

Provide as specified in Section 07840, FIRESTOPPING.

2.9 MANUFACTURER'S NAMEPLATE

Each item of equipment shall have a nameplate bearing the manufacturer's name, address, model number, and serial number securely affixed in a conspicuous place; the nameplate of the distributing agent will not be acceptable.

2.10 FIELD FABRICATED NAMEPLATES

ASTM D 709. Provide laminated plastic nameplates for each equipment enclosure, relay, switch, and device; as specified or as indicated on the drawings. Each nameplate inscription shall identify the function and, when applicable, the position. Nameplates shall be melamine plastic, 3 mm (0.125 inch) thick, white with black center core. Surface shall be matte finish. Corners shall be square. Accurately align lettering and engrave into the core. Minimum size of nameplates shall be 25 by 65 mm (one by 2.5 inches). Lettering shall be a minimum of 6.35 mm (0.25 inch) high normal block style.

2.11 TESTS, INSPECTIONS, AND VERIFICATIONS

2.11.1 Factory Reel Tests

Provide documentation of the testing and verification actions taken by manufacturer to confirm compliance with EIA TIA/EIA-568-B.1, EIA TIA/EIA-568-B.3, EIA TIA/EIA-526-7 for single mode optical fiber cables.

PART 3 EXECUTION

3.1 INSTALLATION

Install telecommunications cabling and pathway systems, including the horizontal and backbone cable, pathway systems, telecommunications outlet/connector assemblies, and associated hardware in accordance with EIA TIA/EIA-568-B.1, EIA TIA/EIA-568-B.2, EIA TIA/EIA-568-B.3, EIA TIA/EIA-569-A, NFPA 70, and UL standards as applicable. Provide cabling in a star topology network. Provide residential cabling in a star wiring architecture from the distribution device as required by EIA TIA/EIA-570-B. Pathways and outlet boxes shall be installed as specified in Section 16402 INTERIOR DISTRIBUTION SYSTEM.

3.1.1 Cabling

Install Category 5e UTP, telecommunications cabling system as detailed in EIA TIA/EIA-568-B.1, EIA TIA/EIA-568-B.2, and EIA TIA/EIA-568-B.3. Screw terminals shall not be used except where specifically indicated on plans. Use an approved insulation displacement connection (IDC) tool kit for copper cable terminations. Do not untwist Category 5e UTP cables more than

12 mm (1/2 inch) from the point of termination to maintain cable geometry. Provide service loop on each end of the cable, 3 m in the telecommunications room, and 304 mm (12 inches) in the work area outlet. Do not exceed manufacturers' cable pull tensions for copper and optical fiber cables. Provide a device to monitor cable pull tensions. Do not exceed 110 N (25 pounds) pull tension for four pair copper cables. Do not chafe or damage outer jacket materials. Use only lubricants approved by cable manufacturer. Do not over cinch cables, or crush cables with staples. For UTP cable, bend radii shall not be less than four times the cable diameter. Cables shall be terminated; no cable shall contain unterminated elements. Cables shall not be spliced. Label cabling in accordance with paragraph LABELING in this section.

3.1.1.1 Horizontal Cabling

Install horizontal cabling as indicated on drawings between the TCC and the telecommunications outlet assemblies at workstations.

3.1.2 Pathway Installations

Provide in accordance with EIA TIA/EIA-569-A and NFPA 70. Provide building pathway as specified in Section 16402, INTERIOR DISTRIBUTION SYSTEMS.

3.1.3 Service Entrance Conduit, Overhead

Provide service entrance overhead as specified on the drawings.

3.1.4 Service Entrance Conduit, Underground

Provide service entrance underground as specified on the drawings.

3.1.5 Cable Tray Installation

Install cable tray as specified in Section 16402 INTERIOR DISTRIBUTION SYSTEMS. Only CMP and OFNP type cable shall be installed in a plenum.

3.1.6 Work Area Outlets

3.1.6.1 Terminations

Terminate UTP cable in accordance with EIA TIA/EIA-568-B.1, EIA TIA/EIA-568-B.2 and wiring configuration as specified.

3.1.6.2 Cover Plates

As a minimum, each outlet/connector shall be labeled as to its function and a unique number to identify cable link in accordance with the paragraph LABELING in this section.

3.1.6.3 Cables

Unshielded twisted pair and fiber optic cables shall have a minimum of 304 mm of slack cable loosely coiled into the telecommunications outlet boxes. Minimum manufacturer's bend radius for each type of cable shall not be exceeded.

3.1.6.4 Pull Cords

Pull cords shall be installed in conduit serving telecommunications outlets

that do not have cable installed.

3.1.7 Telecommunications Space Termination

Install termination hardware required for Category 5e system. An insulation displacement tool shall be used for terminating copper cable to insulation displacement connectors.

3.1.7.1 Connector Blocks

Connector blocks shall be wall mounted in orderly rows and columns. Adequate vertical and horizontal wire routing areas shall be provided between groups of blocks. Install in accordance with industry standard wire routing guides in accordance with EIA TIA/EIA-569-A.

3.1.7.2 Patch Panels

Patch panels shall be mounted on the plywood backboard as specified on the drawings..

a. Copper Patch Panel. Copper cable entering a patch panel shall be secured to the panel with cable ties or as recommended by the manufacturer to prevent movement of the cable.

b. Fiber Optic Patch Panel. Fiber optic cable loop shall be 1000 mm in length. The outer jacket of each cable entering a patch panel shall be secured to the panel to prevent movement of the fibers within the panel, using clamps or brackets specifically manufactured for that purpose.

3.1.7.3 Equipment Support Frames

Install in accordance with EIA TIA/EIA-569-A:

a. Bracket, wall mounted. Mount bracket to plywood backboard in accordance with manufacturer's recommendations. Mount rack so height of highest panel does not exceed 1980 mm (78 inches) above floor.

b. Racks, floor mounted modular type. Permanently anchor rack to the floor in accordance with manufacturer's recommendations.

c. Cabinets, freestanding modular type. When cabinets are connected together, remove adjoining side panels for cable routing between cabinets. Mount rack mounted fan in roof and base of cabinet.

d. Cabinets, wall-mounted modular type. Mount cabinet to plywood backboard in accordance with manufacturer's recommendations. Mount cabinet so height of highest panel does not exceed 1980 mm above floor.

3.1.8 Electrical Penetrations

Seal openings around electrical penetrations through fire resistance-rated wall, partitions, floors, or ceilings as specified in Section 07840, FIRESTOPPING.

3.1.9 Grounding and Bonding

Provide in accordance with TIA J-STD-607-A, NFPA 70 and as specified in Section 16402 INTERIOR DISTRIBUTION SYSTEMS.

3.2 LABELING

3.2.1 Labels

Provide labeling in accordance with EIA TIA/EIA-606-A. Handwritten labeling is unacceptable. Stenciled lettering for voice and data circuits shall be provided using thermal ink transfer process or laser printer.

3.2.2 Cable

Cables shall be labeled using color labels on both ends with identifiers in accordance with EIA TIA/EIA-606-A.

3.2.3 Termination Hardware

Workstation outlets and patch panel connections shall be labeled using color coded labels with identifiers in accordance with EIA TIA/EIA-606-A.

3.3 FIELD APPLIED PAINTING

Paint electrical equipment as required to match finish of adjacent surfaces or to meet the indicated or specified safety criteria. Painting shall be as specified in Section 09900 PAINTS AND COATINGS.

3.4 FIELD FABRICATED NAMEPLATE MOUNTING

Provide number, location, and letter designation of nameplates as indicated. Fasten nameplates to the device with a minimum of two sheet-metal screws or two rivets.

3.5 TESTING

3.5.1 Telecommunications Cabling Testing

Perform telecommunications cabling inspection, verification, and performance tests in accordance with EIA TIA/EIA-568-B.1, EIA TIA/EIA-568-B.2, EIA TIA/EIA-568-B.3.

3.5.1.1 Inspection

Visually inspect UTP and optical fiber jacket materials for UL or third party certification markings. Inspect cabling terminations in telecommunications rooms and at workstations to confirm color code for T568A or T568B pin assignments, and inspect cabling connections to confirm compliance with EIA TIA/EIA-568-B.1, EIA TIA/EIA-568-B.2, and EIA TIA/EIA-568-B.3. Visually confirm Category 5e marking of outlets, cover plates, outlet/connectors, and patch panels.

3.5.1.2 Verification Tests

UTP backbone copper cabling shall be tested for DC loop resistance, shorts, opens, intermittent faults, and polarity between conductors, and between conductors and shield, if cable has overall shield. Test operation of shorting bars in connection blocks. Test cables after termination but not

cross-connected.

3.5.1.3 Performance Tests

Perform testing for each outlet and MUTOA as follows:

Perform Category 5e link tests in accordance with EIA TIA/EIA-568-B.1 and EIA TIA/EIA-568-B.2. Tests shall include wire map, length, insertion loss, NEXT, PSNEXT, ELFEXT, PSELFEXT, return loss, propagation delay and delay skew.

3.5.1.4 Final Verification Tests

Perform verification tests for UTP systems after the complete telecommunications cabling and workstation outlet/connectors are installed.

a. Voice Tests. These tests assume that dial tone service has been installed. Connect to the network interface device at the demarcation point. Go off-hook and listen and receive a dial tone. If a test number is available, make and receive a local, long distance, and DSN telephone call.

b. Data Tests. These tests assume the Information Technology Staff has a network installed and are available to assist with testing. Connect to the network interface device at the demarcation point. Log onto the network to ensure proper connection to the network.

-- End of Section --

SECTION 16711

TELECOMMUNICATIONS OUTSIDE PLANT (OSP)

PART 1 GENERAL

1.1 REFERENCES

The publications listed below form a part of this specification to the extent referenced. The publications are referred to in the text by the basic designation only.

ASTM INTERNATIONAL (ASTM)

ASTM B 1	(2001) Hard-Drawn Copper Wire
ASTM B 8	(2004) Concentric-Lay-Stranded Copper Conductors, Hard, Medium-Hard, or Soft
ASTM D 709	(2001) Laminated Thermosetting Materials

ELECTRONIC INDUSTRIES ALLIANCE (EIA)

EIA TIA/EIA-455-107A	(1999) Component Reflectance or Link/System Return Loss using a Loss Test Set
EIA TIA/EIA-455-59A	(2000) FOTP-59 Measurement of Fiber Point Discontinuities Using an OTDR
EIA TIA/EIA-455-61A	(2000) FOTP-61 Measurement of Fiber or Cable Attenuation Using an OTDR
EIA TIA/EIA-526-7	(1998) OFSTP-7 Measurement of Optical Power Loss of Installed Single-Mode Fiber Cable Plant (ANSI/TIA/EIA-526-7)
EIA TIA/EIA-568-B.1	(2001; Addendum 2001) Commercial Building Telecommunications Cabling Standard - Part 1: General Requirements (ANSI/TIA/EIA-568-B.1)
EIA TIA/EIA-568-B.2	(2001) Commercial Building Telecommunications Cabling Standard - Part 2: Balanced Twisted Pair Cabling Components (ANSI/TIA/EIA-568-B.2)
EIA TIA/EIA-568-B.3	(2000; Addendum 2002) Optical Fiber Cabling Components Standard (ANSI/TIA/EIA-568-B.3)
EIA TIA/EIA-569-A	(1998; Addenda 2000, 2001) Commercial Building Standards for Telecommunications Pathways and Spaces (ANSI/TIA/EIA-569-A)
EIA TIA/EIA-590-A	(1997) Standard for Physical Location and Protection of Below Ground Fiber Optic

	Cable Plant
EIA TIA/EIA-606-A	(2002) Administration Standard for the Telecommunications Infrastructure (ANSI/TIA/EIA-606)
EIA TIA/EIA-758	(1999; Addendum 1999) Customer-Owned Outside Plant Telecommunications Cabling Standard (ANSI/TIA/EIA-758)
TIA J-STD-607-A	(2002) Commercial Building Grounding (Earthing) and Bonding Requirements for Telecommunications

INSTITUTE OF ELECTRICAL AND ELECTRONICS ENGINEERS (IEEE)

IEEE C2	(2002) National Electrical Safety Code
IEEE Std 100	(2000) The Authoritave Dictionary of IEEE Standards Terms

INSULATED CABLE ENGINEERS ASSOCIATION (ICEA)

ICEA S-87-640	(1999) Fiber Optic Outside Plant Communications Cable
ICEA S-98-688	(1997) Broadband Twisted Pair, Telecommunications Cable Aircore, Polyolefin Insulated Copper Conductors
ICEA S-99-689	(1997) Broadband Twisted Pair Telecommunications Cable Filled, Polyolefin Insulated Copper Conductors

NATIONAL FIRE PROTECTION ASSOCIATION (NFPA)

NFPA 70	(2005) National Electrical Code

THE SOCIETY FOR PROTECTIVE COATINGS (SSPC)

SSPC SP 6	(2000) Commercial Blast Cleaning

U.S. DEPARTMENT OF AGRICULTURE (USDA)

RUS/REA Bull IP 344-2	(2007) Materials Acceptable for Use on Telecommunications Systems of RUS Borrower's
RUS 1755	Telecommunications Standards and Specifications for Materials, Equipment and Construction
RUS Bul 1753E-001	(1996) RUS General Specification for Digital Stored Program Controlled Central Office Equipment, RUS Form 522
RUS Bul 1753F-151	(2001) Specifications and Drawings for Construction of Underground Plant

RUS Bul 1753F-201	(1997) Acceptance Tests of Telecommunications Plant (PC-4)
RUS Bul 1753F-208	(1993) REA Specification for Filled Telephone Cables with Expanded Insulation (PE-89)
RUS Bul 1753F-401	(1995) Splicing Copper and Fiber Optic Cables (PC-2)
RUS/REA Bull 1753F-601	(1994) REA Specification for Filled Fiber Optic Cables (PE-90)
RUS Bul 1751F-643	(2002) Underground Plant Design
RUS Bul 1753F-644	(2002) Underground Plant Construction
RUS Bul 1751F-815	(1979) Electrical Protection of Outside Plant
RUS Bul 1753F-201	(1997) Acceptance Tests of Telecommunications Plant (PC-4)
RUS Bul 1753F-401	(1995) Splicing Copper and Fiber Optic Cables (PC-2)
RUS Bul 345-65	(1985) Shield Bonding Connectors (PE-65)

UNDERWRITERS LABORATORIES (UL)

UL 510	(2005) Polyvinyl Chloride, Polyethylene, and Rubber Insulating Tape
UL 83	(2003; Rev thru Mar 2004) Thermoplastic-Insulated Wires and Cables

1.2 RELATED REQUIREMENTS

[Section 16710, BUILDING TELECOMMUNICATIONS CABLING SYSTEM,][Section 16301N, OVERHEAD TRANSMISSION AND DISTRIBUTION,][and][Section 16302N, UNDERGROUND TRANSMISSION AND DISTRIBUTION][Section 16370A, ELECTRICAL DISTRIBUTION SYSTEM, AERIAL,][and][Section 16375A, ELECTRICAL DISTRIBUTION SYSTEM, UNDERGROUND] apply to this section with additions and modifications specified herein.

1.3 DEFINITIONS

Unless otherwise specified or indicated, electrical and electronics terms used in this specification shall be as defined in EIA TIA/EIA-568-B.1, EIA TIA/EIA-568-B.2, EIA TIA/EIA-568-B.3, EIA TIA/EIA-569-A, EIA TIA/EIA-606-A, and IEEE Std 100 and herein.

1.3.1 Campus Distributor (CD)

A distributor from which the campus backbone cabling emanates. (International expression for main cross-connect - (MC).)

1.3.2 Entrance Facility (EF) (Telecommunications)

An entrance to the building for both private and public network service cables (including antennae) including the entrance point at the building wall and continuing to the entrance room or space.

1.3.3 Entrance Room (ER) (Telecommunications)

A centralized space for telecommunications equipment that serves the occupants of a building. Equipment housed therein is considered distinct from a telecommunications room because of the nature of its complexity.

1.3.4 Building Distributor (BD)

A distributor in which the building backbone cables terminate and at which connections to the campus backbone cables may be made. (International expression for intermediate cross-connect - (IC).)

1.3.5 Pathway

A physical infrastructure utilized for the placement and routing of telecommunications cable.

1.4 SYSTEM DESCRIPTION

The telecommunications outside plant consists of cable, conduit, manholes, poles, etc. required to provide signal paths from the closest point of presence to the new facility, including free standing frames or backboards, interconnecting hardware, terminating cables, lightning and surge protection modules at the entrance facility. The work consists of providing, testing and making operational cabling, interconnecting hardware and lightning and surge protection necessary to form a complete outside plant telecommunications system for continuous use.

1.5 SUBMITTALS

Government approval is required for submittals with a "G" designation; submittals not having a "G" designation are for information only. When used, a designation following the "G" designation identifies the office that will review the submittal for the Government. The following shall be submitted in accordance with Section 01330 SUBMITTAL PROCEDURES:

SD-02 Shop Drawings

Telecommunications Outside Plant; G TAC

Telecommunications Entrance Facility Drawings; G TAC

In addition to Section 01330 SUBMITTAL PROCEDURES, provide shop drawings in accordance with paragraph SHOP DRAWINGS.

SD-03 Product Data

Fiber Optic Combination Units; G TAC

Wire and cable; G TAC

Cable splice closures, and connectors; G TAC
(Copper and fiber)

Closures; G TAC

Building protector assemblies; G TAC

Protector modules; G TAC

Main Distribution Frame; G TAC

MDF Blocks and Protectors; G TAC

Spare Parts; G TAC

Submittals shall include the manufacturer's name, trade name, place of manufacture, and catalog model or number. Submittals shall also include applicable federal, military, industry, and technical society publication references. Should manufacturer's data require supplemental information for clarification, the supplemental information shall be submitted as specified in paragraph REGULATORY REQUIREMENTS and as required for certificates in Section 01330 SUBMITTAL PROCEDURES.

SD-06 Test Reports

Pre-installation tests; G TAC

Acceptance tests; G TAC

Outside Plant Test Plan; G TAC

SD-07 Certificates

Telecommunications Contractor Qualifications; G TAC

Key Personnel Qualifications; G TAC

Minimum Manufacturer's Qualifications; G TAC

SD-08 Manufacturer's Instructions

Building protector assembly installation; G TAC

Fiber Optic Splices; G TAC

Submit instructions prior to installation.

SD-09 Manufacturer's Field Reports

Factory Reel Test Data; G TAC

SD-11 Closeout Submittals

Record Documentation; G TAC

In addition to other requirements, provide in accordance with paragraph RECORD DOCUMENTATION.

1.6 QUALITY ASSURANCE

1.6.1 Shop Drawings

Include wiring diagrams and installation details of equipment indicating proposed location, layout and arrangement, control panels, accessories, piping, ductwork, and other items that must be shown to ensure a coordinated installation. Wiring diagrams shall identify circuit terminals and indicate the internal wiring for each item of equipment and the interconnection between each item of equipment. Drawings shall indicate adequate clearance for operation, maintenance, and replacement of operating equipment devices. Submittals shall include the nameplate data, size, and capacity. Submittals shall also include applicable federal, military, industry, and technical society publication references.

1.6.1.1 Telecommunications Outside Plant Shop Drawings

Provide Outside Plant Design in accordance with RUS Bul 1751F-643, RUS Bul 1753F-151 and RUS Bul 1753F-644 for underground system design. Provide T0 shop drawings that show the physical and logical connections from the perspective of an entire campus, such as actual building locations, exterior pathways and campus backbone cabling on plan view drawings, major system nodes, and related connections on the logical system drawings in accordance with EIA TIA/EIA-606-A. Drawings shall include wiring and schematic diagrams for fiber optic and copper cabling and splices, copper conductor gauge and pair count, fiber pair count and type, pathway duct and innerduct arrangement, associated construction materials, and any details required to demonstrate that cable system has been coordinated and will properly support the switching and transmission system identified in specification and drawings. Provide Registered Communications Distribution Designer (RCDD) approved drawings of the telecommunications outside plant. Update existing telecommunication Outside Plant T0 drawings to include information modified, deleted or added as a result of this installation in accordance with EIA TIA/EIA-606-A. The telecommunications outside plant (OSP) shop drawings shall be included in the operation and maintenance manuals.

1.6.1.2 Telecommunications Entrance Facility Drawings

Provide T3 drawings for EF Telecommunications in accordance with EIA TIA/EIA-606-A that include telecommunications entrance facility plan views, pathway layout (cable tray, racks, ladder-racks, etc.), mechanical/electrical layout, and cabinet, rack, backboard and wall elevations. Drawings shall show layout of applicable equipment including incoming cable stub or connector blocks, building protector assembly, outgoing cable connector blocks, patch panels and equipment spaces and cabinet/racks. Drawings shall include a complete list of equipment and material, equipment rack details, proposed layout and anchorage of equipment and appurtenances, and equipment relationship to other parts of the work including clearance for maintenance and operation. Drawings may also be an enlargement of a congested area of T1 or T2 drawings. Provide T3 drawings for EF Telecommunications as specified in the paragraph TELECOMMUNICATIONS SPACE DRAWINGS of Section 16710, BUILDING TELECOMMUNICATIONS CABLING SYSTEMS. The telecommunications entrance facility shop drawings shall be included in the operation and maintenance manuals.

1.6.2 Telecommunications Qualifications

Work under this section shall be performed by and the equipment shall be provided by the approved telecommunications contractor and key personnel. Qualifications shall be provided for: the telecommunications system contractor, the telecommunications system installer, the supervisor (if different from the installer), and the cable splicing and terminating personnel. A minimum of 30 days prior to installation, submit documentation of the experience of the telecommunications contractor and of the key personnel.

1.6.2.1 Telecommunications Contractor Qualifications

The telecommunications contractor shall be a firm which is regularly and professionally engaged in the business of the applications, installation, and testing of the specified telecommunications systems and equipment. The telecommunications contractor shall demonstrate experience in providing successful telecommunications systems that include outside plant and broadband cabling within the past 3 years. Submit documentation for a minimum of three and a maximum of five successful telecommunication system installations for the telecommunications contractor. Each of the key personnel shall demonstrate experience in providing successful telecommunications systems in accordance with EIA TIA/EIA-758 within the past 3 years.

1.6.2.2 Key Personnel Qualifications

Provide key personnel who are regularly and professionally engaged in the business of the application, installation and testing of the specified telecommunications systems and equipment. There may be one key person or more key persons proposed for this solicitation depending upon how many of the key roles each has successfully provided.

Cable splicing and terminating personnel assigned to the installation of this system or any of its components shall have training in the proper techniques and have a minimum of 3 years experience in splicing and terminating the specified cables. Modular copper cable splices shall be performed by factory certified personnel for products used. Fiber optic splicers shall have seven (7) years experience in fusion splicing, five (5) years unsupervised experience with the brand of splicing machine and closure, and two (2) years with the model of the fusion splicing machine. The copper splice closures shall be installed by the copper splicers only. The copper splicers shall have a minimum of seven (7) years documented unsupervised experience in installation of the splice closures.

Supervisors and installers assigned to the installation of this system or any of its components shall have factory or factory approved certification from each equipment manufacturer indicating that they are qualified to install and test the provided products.

Submit documentation for a minimum of three and a maximum of five successful telecommunication system installations for each of the key personnel. Documentation for each key person shall include at least two successful system installations provided that are equivalent in system size and in construction complexity to the telecommunications system proposed for this solicitation. Include specific experience in installing and testing telecommunications outside plant systems, including broadband cabling, and provide the names and locations of at least two project installations successfully completed using optical fiber and copper

telecommunications cabling systems. All of the existing telecommunications system installations offered by the key persons as successful experience shall have been in successful full-time service for at least 18 months prior to the issuance date for this solicitation. Provide the name and role of the key person, the title, location, and completed installation date of the referenced project, the referenced project owner point of contact information including name, organization, title, and telephone number, and generally, the referenced project description including system size and construction complexity.

Indicate that all key persons are currently employed by the telecommunications contractor, or have a commitment to the telecommunications contractor to work on this project. All key persons shall be employed by the telecommunications contractor at the date of issuance of this solicitation, or if not, have a commitment to the telecommunications contractor to work on this project by the date that the bid was due to the Contracting Officer.

Note that only the key personnel approved by the Contracting Officer in the successful proposal shall do work on this solicitation's telecommunications system. Key personnel shall function in the same roles in this contract, as they functioned in the offered successful experience. Any substitutions for the telecommunications contractor's key personnel requires approval from The Contracting Officer.

1.6.2.3 Minimum Manufacturer's Qualifications

Cabling, equipment and hardware manufacturers shall have a minimum of 3 years experience in the manufacturing, assembly, and factory testing of components which comply with, EIA TIA/EIA-568-B.1, EIA TIA/EIA-568-B.2 and EIA TIA/EIA-568-B.3. In addition, cabling manufacturers shall have a minimum of 3 years experience in the manufacturing and factory testing of cabling which comply with ICEA S-87-640, ICEA S-98-688, and ICEA S-99-689.

1.6.3 Outside Plant Test Plan

Prepare and provide a complete and detailed test plan for field tests of the outside plant including a complete list of test equipment for the copper conductor and optical fiber cables, components, and accessories for approval by the Contracting Officer. Include a cut-over plan with procedures and schedules for relocation of facility station numbers without interrupting service to any active location. Submit the plan at least 60 days prior to tests for Contracting Officer approval. Provide outside plant testing and performance measurement criteria in accordance with RUS Bul 1753F-201. Include procedures for certification, validation, and testing that includes fiber optic link performance criteria.

1.6.4 Standard Products

Provide materials and equipment that are standard products of manufacturers regularly engaged in the production of such products which are of equal material, design and workmanship and shall be the manufacturer's latest standard design that has been in satisfactory commercial or industrial use for at least 2 years prior to bid opening. The 2-year period shall include applications of equipment and materials under similar circumstances and of similar size. The product shall have been on sale on the commercial market through advertisements, manufacturers' catalogs, or brochures during the 2 -year period. Products supplied shall be specifically designed and manufactured for use with outside plant telecommunications systems. Where

two or more items of the same class of equipment are required, these items shall be products of a single manufacturer; however, the component parts of the item need not be the products of the same manufacturer unless stated in this section.

1.6.4.1 Alternative Qualifications

Products having less than a 2-year field service record will be acceptable if a certified record of satisfactory field operation for not less than 6000 hours, exclusive of the manufacturers' factory or laboratory tests, is provided.

1.6.4.2 Material and Equipment Manufacturing Date

Products manufactured more than 3 years prior to date of delivery to site shall not be used, unless specified otherwise.

1.6.5 Regulatory Requirements

In each of the publications referred to herein, consider the advisory provisions to be mandatory, as though the word, "shall" had been substituted for "should" wherever it appears. Interpret references in these publications to the "authority having jurisdiction," or words of similar meaning, to mean the Contracting Officer. Equipment, materials, installation, and workmanship shall be in accordance with the mandatory and advisory provisions of NFPA 70 unless more stringent requirements are specified or indicated.

1.6.5.1 Independent Testing Organization Certificate

In lieu of the label or listing, submit a certificate from an independent testing organization, competent to perform testing, and approved by the Contracting Officer. The certificate shall state that the item has been tested in accordance with the specified organization's test methods and that the item complies with the specified organization's reference standard.

1.7 DELIVERY, STORAGE, AND HANDLING

Ship cable on reels in cut lengths as required to faciitate installation with a minimum overage of 10 percent. Radius of the reel drum shall not be smaller than the minimum bend radius of the cable. Wind cable on the reel so that unwinding can be done without kinking the cable. Two meters of cable at both ends of the cable shall be accessible for testing. Attach permanent label on each reel showing length, cable identification number, cable size, cable type, and date of manufacture. Provide water resistant label and the indelible writing on the labels. Apply end seals to each end of the cables to prevent moisture from entering the cable. Reels with cable shall be suitable for outside storage conditions when temperature ranges from minus 40 degrees C to plus 65 degrees C, with relative humidity from 0 to 100 percent. Equipment, other than cable, delivered and placed in storage shall be stored with protection from weather, humidity and temperature variation, dirt and dust, or other contaminants in accordance with manufacturer's requirements.

1.8 MAINTENANCE

1.8.1 Record Documentation

Provide the activity responsible for telecommunications system maintenance

and administration a single complete and accurate set of record documentation for the entire telecommunications system with respect to this project.

Provide T5 drawings including documentation on cables and termination hardware in accordance with EIA TIA/EIA-606-A. T5 drawings shall include schedules to show information for cut-overs and cable plant management, patch panel layouts, cross-connect information and connecting terminal layout as a minimum. Update existing record documentation to reflect campus distribution T0 drawings and T3 drawing schedule information modified, deleted or added as a result of this installation. Provide the following T5 drawing documentation as a minimum:

a. Cables - A record of installed cable shall be provided in accordance with EIA TIA/EIA-606-A. The cable records shall include only the required data fields][include the required data fields for each cable and complete end-to-end circuit report for each complete circuit from the assigned outlet to the entry facility in accordance with EIA TIA/EIA-606-A. Include manufacture date of cable with submittal.

b. Termination Hardware - Provide a record of installed patch panels, cross-connect points, campus distributor and terminating block arrangements and type in accordance with EIA TIA/EIA-606-A. Documentation shall include only the required data fields as a minimum in accordance with EIA TIA/EIA-606-A.

Provide record documentation as specified in Section 16710, BUILDING TELECOMMUNICATIONS CABLING SYSTEM.

1.8.2 Spare Parts

In addition to the requirements of Section 01781, OPERATION AND MAINTENANCE DATA, provide a complete list of parts and supplies, with current unit prices and source of supply, and a list of spare parts recommended for stocking. Spare parts shall be provided no later than the start of field testing.

1.9 WARRANTY

The equipment items shall be supported by service organizations which are reasonably convenient to the equipment installation in order to render satisfactory service to the equipment on a regular and emergency basis during the warranty period of the contract.

PART 2 PRODUCTS

2.1 MATERIALS AND EQUIPMENT

Products supplied shall be specifically designed and manufactured for use with outside plant telecommunications systems.

2.2 TELECOMMUNICATIONS ENTRANCE FACILITY

2.2.1 Protected Entrance Terminal (PET)

2.2.1.1 PET 25, 50 or 100 Pairs

These PETs shall consist of an input splice chamber with a 66 block punch

down clip for the outside plant cable, the protector field and the output from the protector field wired to a factory installed 110 type punch down block (PET Block). Another 110 punch down block will be installed next to the PET (station block) and all station cable pairs terminated to that 110 block. Jumpers will be installed to connect the PET and the station blocks. The gas tubes shall be 5 pin heavy duty with two or three element gas tubes. The PETs and the gas tubes shall be listed in RUS/REA Bull IP 344-2.

2.2.1.2 PET 6 Pair

The 6 pair PET shall consist of a thermoplastic base with three (3) 2-pair protector blocks. Connection shall be via stud mounted nuts. The gas tubes shall be heavy duty, 2 element well type. The PET and the gas tubes shall be as listed in RUS/REA Bull IP 344-2. A category 6, 100 type punch down block shall be installed next to the PET. All subscriber cable pairs shall be connected to the punch down block. Jumpers shall be installed from the PET to the punch down block to provide connectivity to the station outlets.

2.2.1.3 Main Distribution Frame (MFD) Copper, Communications Building

The MDF shall be a two sided, painted steel, main distribution frame of welded assembly with bold on frame components. The guard rails shall be adjustable from 775 mm to 927 mm but configured for 858 mm. The frame shall be a 12 vertical frame installed above 114 mm sleeved holes in the floor (12 holes for copper cable). The holes shall go to a cable vault below the room as shown in the drawings. The main frame shall be equipped with mounting brackets for RUS listed 100 pair MDF protector blocks with gas tube protectors. The main frame shall meet the requirement in RUS Bul 1753E-001. The protector blocks shall be annotated in Section 01015 TECHNICAL REQUIREMENTS.

2.2.2 Fiber Optic Terminations, Buildings

The fiber optic terminations shall consist of the outside plant cable being fusion spliced to single mode pigtails with factory installed SC connectors. The fusion splice shall have a splice loss of .02 dB or better as measured by the splicing machine and .2 dB as measured by an OTDR. The pigtails shall have single mode insertion loss of less than .35 dB with the typical being 15 dB and a single mode return loss better than -55 dB. The fusion splices shall be protected by a stainless steel sleeve and heat shrink tube and placed in a splice tray. The terminations shall be contained in a rack mounted combination unit (patching and splice containment). The enclosure shall be equipped with hardware to properly store 1 meter of fiber slack. The enclosure shall be designed to handle adapter panels with three duplex SC connectors per adapter panel. The SC connectors shall hae zirconia ceramic sleeves. The enclosure shall be capable of mounting four (4) adapter panelss. Blank adapter plates shall be used where ever there are no fiber optic adapter panels. One duplex single mode fiber optic patch cord shall be provided for each duplex fiber optic port. The fiber patch cords shall have a mated pair insertion loss of less than .35 dB with a typical loss of .15 dB and a typical mated return loss of less than -55 dB.

2.2.3 Fiber Optic Terminations, MDF, Communications Building

There shall be three (3) holes with sleeves down to the vault on the end of the copper MDF for fiber optic cable. Three (3) 19-inch relay racks shall

be installed by these holes for mounting of the fiber optic hardware necessary for termination and patching of the fiber optic cables. The fiber optic MDF termination hardware for the Communications Building shall be annoted in Section 01015 TECHNICAL REQUIREMENTS.

2.3 CLOSURES

2.3.1 Copper Conductor Closures

2.3.1.1 Underground Cable Closures

In vault or manhole: Provide underground closure suitable to house a straight, butt, and branch splice in a protective housing into which can be poured an encapsulating compound. Closure shall be of suitable thermoplastic, thermoset, or stainless steel material supplying structural strength necessary to pass the mechanical and electrical requirements in a vault or manhole environment. Encapsulating compound shall be reenterable and shall not alter the chemical stability of the closure. The encapsulant must completely fill the splice interstices. The closure shall be flash tested with nitrogen before encapsulation. The closure shall be listed in RUS/REA Bull IP 344-2. Vault closures shall meet the requirements of RUS Form 522.

2.3.2 Fiber Optic Closures

2.3.2.1 In Vault or Manhole

Provide underground closure suitable to house splice organizer in a protective housing into which can be poured an encapsulating compound. Closure shall be of thermoplastic, thermoset, or stainless steel material supplying structural strength necessary to pass the mechanical and electrical requirements in a vault or manhole environment. Encapsulating compound shall be reenterable and shall not alter the chemical stability of the closure. The closure shall be flash tested with nitrogen before encapsulation. The closure shall be listed in RUS/REA Bull IP 344-2.

2.4 CABLE SPLICES, AND CONNECTORS

2.4.1 Copper Cable Splices

Providemodular splices of a moisture resistant, insulation displacement connectors held rigidly in place to assure maximum continuity in accordance with RUS Bul 1753F-401. Cables 25 pairs or greater shall be spliced using multipair splicing connectors, which accommodate 25 pairs of conductors at a time. Provide correct connector size to accommodate the cable gauge of the supplied cable. Descrete modules shall be used on splices less than 25 pairs.

2.4.2 Copper Cable Splice Connector

Provide splice connectors with a polycarbonate body and cap and a tin-plated brass contact element. Connector shall accommodate 22 to 26 AWG solid wire with a maximum insulation diameter of 1.65 mm (0.065 inch). Fill connector with sealant grease to make a moisture resistant connection, in accordance with RUS Bul 1753F-401. Connectors shall be listed in RUS/REA Bull IP 344-2.

2.4.3 Fiber Optic Cable Splices

Provide fiber optic cable splices and splicing materials for fusion mechanical methods. The splice insertion loss shall be 0.2 dB maximum when measured in accordance with EIA TIA/EIA-455-59A using an Optical Time Domain Reflectometer (OTDR) and .02 dB as splices shall be designed for a return loss of 40.0 db max for single mode fiber when tested in accordance with EIA TIA/EIA-455-107A. Physically protect each fiber optic splice by a splice kit (stainless steel rod and heat shrink tube) specially designed for the splice measured by the splicing machine.

2.4.4 Fiber Optic Splice Organizer

Provide splice organizer suitable for housing fiber optic splices in a neat and orderly fashion. Splice organizer shall allow for a minimum of 1 m of fiber for each fiber within the cable to be neatly stored without kinks or twists. Splice organizer shall accommodate individual strain relief for each splice and allow for future maintenance or modification, without damage to the cable or splices. Provide splice organizer hardware, such as splice trays, protective sleeves, and shield bond connectors in a splice organizer kit.

2.4.5 Shield Connectors

Provide connectors with a stable, low-impedance electrical connection between the cable shield and the bonding conductor in accordance with RUS Bul 345-65.

2.5 CONDUIT

Provide conduit as specified in Section 01015 TECHNICAL REQUIREMENTS.

2.6 PLASTIC INSULATING TAPE

UL 510.

2.7 WIRE AND CABLE

2.7.1 Copper Conductor Cable

Solid copper conductors, covered with an extruded solid insulating compound. Insulated conductors shall be twisted into pairs which are then stranded or oscillated to form a cylindrical core. For special high frequency applications, the cable core shall be separated into compartments. Cable shall be completed by the application of a suitable core wrapping material, a corrugated copper or plastic coated aluminum shield, and an overall extruded jacket. Telecommunications contractor shall verify distances between splice points prior to ordering cable in specific cut lengths. Gauge of conductor shall be 24 gauge. Copper conductor shall conform to the following:

2.7.1.1 Underground

Provide filled cable meeting the requirements of ICEA S-99-689, RUS Bul 1753F-208.

2.7.2 Fiber Optic Cable

Provide single-mode, 8/125-um, 0.10 aperture dual window fiber optic cable.

Fiber optic cable shall be specifically designed for outside use with loose buffer construction. Provide fiber optic color code in accordance with RUS/REA Bull 1753F-601. The fiber cable shall have 9 maximum loss of .4 dB Km @ 1310 mm and .3 db Km @ 1550 mm. There shall be no internal fiber splices in the fiber.

2.7.2.1 Strength Members

Provide central, non-metallic strength members with sufficient tensile strength for installation and residual rated loads to meet the applicable performance requirements in accordance with ICEA S-87-640. The strength member is included to serve as a cable core foundation to reduce strain on the fibers, and shall not serve as a pulling strength member.

2.7.2.2 Shielding or Other Metallic Covering

The fiber optic cable shall have a 6 mil copolymer coated steel shield.

2.7.2.3 Performance Requirements

Provide fiber optic cable with optical and mechanical performance requirements in accordance with ICEA S-87-640.

2.7.3 Grounding and Bonding Conductors

Provide grounding and bonding conductors in accordance with RUS 1755.200, TIA J-STD-607-A, IEEE C2, and NFPA 70. Solid bare copper wire meeting the requirements of ASTM B 1 for sizes No. 8 AWG and smaller and stranded bare copper wire meeting the requirements of ASTM B 8, for sizes No. 6 AWG and larger. Insulated conductors shall have 600-volt, Type TW insulation meeting the requirements of UL 83.

2.8 CABLE TAGS IN MANHOLES, HANDHOLES, AND VAULTS

Provide tags for each telecommunications cable or wire located in manholes, handholes, and vaults. Cable tags shall be stainless steel and labeled as indicated in accordance with EIA TIA/EIA-606-A. Handwritten labeling is unacceptable.

2.8.1 Stainless Steel

Provide stainless steel, cable tags 41.25 mm (1 5/8 inches) in diameter 1.58 mm (1/16 inch) thick minimum, and circular in shape. Tags shall be die stamped with numbers, letters, and symbols not less than 6.35 mm (0.25 inch) high and approximately 0.38 mm (0.015 inch) deep in normal block style.

2.8.2 Polyethylene Cable Tags

Provide tags of polyethylene that have an average tensile strength of 22.4 MPa (3250 pounds per square inch); and that are two millimeter (0.08 inch) thick (minimum), non-corrosive non-conductive; resistive to acids, alkalis, organic solvents, and salt water; and distortion resistant to 77 degrees C (170 degrees F). Provide 1.3 mm (0.05 inch) (minimum) thick black polyethylene tag holder. Provide a one-piece nylon, self-locking tie at each end of the cable tag. Ties shall have a minimum loop tensile strength of 778.75 N (175 pounds). The cable tags shall have black block letters, numbers, and symbols 25 mm (one inch) high on a yellow background. Letters, numbers, and symbols shall not fall off or change positions

regardless of the cable tags' orientation.

2.9 BURIED WARNING AND IDENTIFICATION TAPE

Provide fiber optic media marking and protection in accordance with EIA TIA/EIA-590-A. Provide color, type and depth of tape as specified in paragraph BURIED WARNING AND IDENTIFICATION TAPE in Section 02300, EARTHWORK.

2.10 GROUNDING BRAID

Provide grounding braid that provides low electrical impedance connections for dependable shield bonding in accordance with RUS Bul 345-65 and RUS Bul 1753F-401. Braid shall be made from flat tin-plated copper.

2.11 MANUFACTURER'S NAMEPLATE

Each item of equipment shall have a nameplate bearing the manufacturer's name, address, model number, and serial number securely affixed in a conspicuous place; the nameplate of the distributing agent will not be acceptable.

2.12 FIELD FABRICATED NAMEPLATES

Provide laminated plastic nameplates in accordance with ASTM D 709 for each patch panel, protector assembly, rack, cabinet and other equipment or as indicated on the drawings. Each nameplate inscription shall identify the function and, when applicable, the position. Nameplates shall be melamine plastic, 3 mm (0.125 inch) thick, white with black center core. Surface shall be matte finish. Corners shall be square. Accurately align lettering and engrave into the core. Minimum size of nameplates shall be 25 by 65 mm (one by 2.5 inches). Lettering shall be a minimum of 6.35 mm (0.25 inch) high normal block style.

2.13 TESTS, INSPECTIONS, AND VERIFICATIONS

2.13.1 Factory Reel Test Data

Test 100 percent OTDR test of FO media at the factory in accordance with EIA TIA/EIA-526-7 for single mode fiber. Calibrate OTDR to show anomalies of 0.2 dB minimum. Submit test reports, including manufacture date for each cable reel and receive approval before delivery of cable to the project site.

PART 3 EXECUTION

3.1 INSTALLATION

Install all system components and appurtenances in accordance with manufacturer's instructions IEEE C2, NFPA 70, and as indicated. Provide all necessary interconnections, services, and adjustments required for a complete and operable telecommunications system.

3.1.1 Contractor Damage

Promptly repair indicated utility lines or systems damaged during site preparation and construction. Damages to lines or systems not indicated, which are caused by Contractor operations, shall be treated as "Changes" under the terms of the Contract Clauses. When Contractor is advised in

writing of the location of a nonindicated line or system, such notice shall provide that portion of the line or system with "indicated" status in determining liability for damages. In every event, immediately notify the Contracting Officer of damage.

3.1.2 Cable Inspection and Repair

Handle cable and wire provided in the construction of this project with care. Inspect cable reels for cuts, nicks or other damage. Damaged cable shall be replaced or repaired to the satisfaction of the Contracting Officer. Reel wraps shall remain intact on the reel until the cable is ready for placement.

3.1.3 Underground Duct

Provide underground duct and connections in accordance with Section 01015 TECHNICAL REQUIREMENTS.

3.1.4 Penetrations

Caulk and seal cable access penetrations in walls, ceilings and other parts of the building. Seal openings around electrical penetrations through fire resistance-rated wall, partitions, floors, or ceilings in accordance with Section 07840, FIRESTOPPING.

3.1.5 Cable Pulling

Test duct lines with a mandrel and swab out to remove foreign material before the pulling of cables. Avoid damage to cables in setting up pulling apparatus or in placing tools or hardware. Do not step on cables when entering or leaving the manhole. Do not place cables in ducts other than those shown without prior written approval of the Contracting Officer. Roll cable reels in the direction indicated by the arrows painted on the reel flanges. Set up cable reels on the same side of the manhole as the conduit section in which the cable is to be placed. Level the reel and bring into proper alignment with the conduit section so that the cable pays off from the top of the reel in a long smooth bend into the duct without twisting. Under no circumstances shall the cable be paid off from the bottom of a reel. Check the equipment set up prior to beginning the cable pulling to avoid an interruption once pulling has started. Use a cable feeder guide of suitable dimensions between cable reel and face of duct to protect cable and guide cable into the duct as it is paid off the reel. As cable is paid off the reel, lubricate and inspect cable for sheath defects. When defects are noticed, stop pulling operations and notify the Contracting Officer to determine required corrective action. Cable pulling shall also be stopped when reel binds or does not pay off freely. Rectify cause of binding before resuming pulling operations. Provide cable lubricants recommended by the cable manufacturer. Avoid bends in cables of small radii and twists that might cause damage. Do not bend cable and wire in a radius less than 10 times the outside diameter of the cable or wire.

3.1.5.1 Cable Tensions

Obtain from the cable manufacturer and provide to the Contracting Officer, the maximum allowable pulling tension. This tension shall not be exceeded.

3.1.5.2 Pulling Eyes

Equip cables 32 mm (1.25 inches) in diameter and larger with cable

manufacturer's factory installed pulling-in eyes. Provide cables with diameter smaller than 32 mm (1.25 inches) with heat shrinkable type end caps or seals on cable ends when using cable pulling grips. Rings to prevent grip from slipping shall not be beaten into the cable sheath. Use a swivel of 19 mm (3/4 inch) links between pulling-in eyes or grips and pulling strand.

3.1.5.3 Installation of Cables in Manholes, Handholes, and Vaults

Do not install cables utilizing the shortest route, but route along those walls providing the longest route and the maximum spare cable lengths. Form cables to closely parallel walls, not to interfere with duct entrances, and support cables on brackets. In existing manholes, handholes, and vaults where new ducts are to be terminated, or where new cables are to be installed, modify the existing installation of cables, cable supports, and grounding as required with cables arranged and supported as specified for new cables. Identify each cable with corrosion-resistant embossed metal tags.

3.1.6 Cable Splicing

3.1.6.1 Copper Conductor Splices

Perform splicing in accordance with requirements of RUS Bul 1753F-401.

3.1.6.2 Fiber Optic Splices

Fiber optic splicing shall be in accordance with manufacturer's recommendation and shall exhibit an insertion loss not greater than 0.2 dB for fusion splices as measured by the OTDR and .02 dB as measured by the splicing machine.

3.1.7 Surge Protection

All cables and conductors, except fiber optic cable, which serve as communication lines through off-premise lines, shall have surge protection installed at each end which meet the requirements of RUS Bul 1751F-815.

3.1.8 Grounding

Provide grounding and bonding in accordance with RUS 1753F.401, TIA J-STD-607-A, IEEE C2, and NFPA 70. Ground exposed noncurrent carrying metallic parts of telephone equipment, cable sheaths, cable splices, and terminals.

3.1.8.1 Telecommunications Master Ground Bar (TMGB)

The TMGB is the hub of the basic telecommunications grounding system providing a common point of connection for ground from outside cable, CD, and equipment. Establish a TMGB for connection point for cable stub shields to connector blocks and CD protector assemblies as specified in Section 16402 INTERIOR DISTRIBUTION SYSTEMS.

3.1.8.2 Incoming Cable Shields

Shields shall not be bonded across the splice to the cable stubs. Ground shields of incoming cables in the EF Telecommunications to the TMGB.

3.1.8.3 Campus Distributor Grounding

a. PET Protection assemblies: Mount directly on the telecommunications backboard. Connect connector assemblies mounted on each vertical frame with No. 6 AWG copper conductor to provide a low resistance path to TMGB.

b. TMGB connection: Connect TMGB to TGB with copper conductor with a total resistance of less than 0.01 ohms.

3.1.9 Cut-Over

All necessary transfers and cut-overs, shall be accomplished by the telecommunications contractor.

3.2 LABELING

3.2.1 Labels

Provide labeling for new cabling and termination hardware located within the facility in accordance with EIA TIA/EIA-606-A. Handwritten labeling is unacceptable. Stenciled lettering for cable and termination hardware shall be provided using a thermal ink transfer process or laser printer.

3.2.2 Cable Tag Installation

Install cable tags for each telecommunications cable or wire located in manholes, handholes, and vaults including each splice. The labeling of telecommunications cable tag identifiers shall be in accordance with EIA TIA/EIA-606-A. Do not provide handwritten letters. Install cable tags so that they are clearly visible without disturbing any cabling or wiring in the manholes, handholes, and vaults.

3.2.3 Termination Hardware

Label patch panels, distribution panels, connector blocks and protection modules using color coded labels with identifiers in accordance with EIA TIA/EIA-606-A.

3.3 FIELD APPLIED PAINTING

Provide ferrous metallic enclosure finishes in accordance with the following procedures. Ensure that surfaces are dry and clean when the coating is applied. Coat joints and crevices. Prior to assembly, paint surfaces which will be concealed or inaccessible after assembly. Apply primer and finish coat in accordance with the manufacturer's recommendations. Provide ferrous metallic enclosure finishes as specified in Section 09900, PAINTS AND COATINGS.

3.3.1 Cleaning

Clean surfaces in accordance with SSPC SP 6.

3.3.2 Priming

Prime with a two component polyamide epoxy primer which has a bisphenol-A base, a minimum of 60 percent solids by volume, and an ability to build up a minimum dry film thickness on a vertical surface of 0.127 mm (5.0 mils). Apply in two coats to a total dry film thickness of 0.127 to 0.2 mm (5 to 8

mils).

3.3.3 Finish Coat

Finish with a two component urethane consisting of saturated polyester polyol resin mixed with aliphatic isocyanate which has a minimum of 50 percent solids by volume. Apply to a minimum dry film thickness of 0.05 to 0.076 mm (2 to 3 mils). Color shall be the manufacturer's standard.

3.4 FIELD FABRICATED NAMEPLATE MOUNTING

Provide number, location, and letter designation of nameplates as indicated. Fasten nameplates to the device with a minimum of two sheet-metal screws or two rivets.

3.5 FIELD QUALITY CONTROL

Provide the Contracting Officer 30 working days notice prior to each test. Provide labor, equipment, and incidentals required for testing. Correct defective material and workmanship disclosed as the results of the tests. Furnish a signed copy of the test results to the Contracting Officer within 3 working days after the tests for each segment of construction are completed. Perform testing as construction progresses and do not wait until all construction is complete before starting field tests.

3.5.1 Pre-Installation Tests

Perform the following tests on cable at the job site before it is removed from the cable reel. For cables with factory installed pulling eyes, these tests shall be performed at the factory and certified test results shall accompany the cable.

3.5.1.1 Cable Capacitance

Perform capacitance tests on at least 100 percent of the pairs within a cable to determine if cable capacitance is within the limits specified.

3.5.1.2 Loop Resistance

Perform DC-loop resistance on at least 100 percent of the pairs within a cable to determine if DC-loop resistance is within the manufacturer's calculated resistance.

3.5.1.3 Pre-Installation Test Results

Provide results of pre-installation tests to the Contracting Officer at least30 working days before installation is to start. Results shall indicate reel number of the cable, manufacturer, size of cable, pairs tested, and recorded readings. When pre-installation tests indicate that cable does not meet specifications, remove cable from the job site.

3.5.2 Acceptance Tests

Perform acceptance testing in accordance with RUS Bul 1753F-201 and as further specified in this section. Provide personnel, equipment, instrumentation, and supplies necessary to perform required testing. Notification of any planned testing shall be given to the Contracting Officer at least 30 days prior to any test unless specified otherwise. Testing shall not proceed until after the Contractor has received written

Contracting Officer's approval of the test plans as specified. Test plans shall define the tests required to ensure that the system meets technical, operational, and performance specifications. The test plans shall define milestones for the tests, equipment, personnel, facilities, and supplies required. The test plans shall identify the capabilities and functions to be tested. Provide test reports in booklet form showing all field tests performed, upon completion and testing of the installed system. Measurements shall be tabulated on a pair by pair or strand by strand basis.

3.5.2.1 Copper Conductor Cable

Perform the following acceptance tests in accordance with RUS Bul 1753F-201:

a. Ground Resistance

b. Shield Continuity. A shield continuity test set must be used.

c. DC Insulation Resistance

d. DC Loop Resistance and DC Resistance Unbalance Measurement

e. Sybscribe Loop Measurement

f. Shorts, grounds, crosses and opens

3.5.2.2 Fiber Optic Cable

Test fiber optic cable in accordance with RUS Bul 1753F-201 and as further specified in this section. Two optical tests shall be performed on all optical fibers: Optical Time Domain Reflectometry (OTDR) Test, and Attenuation Test. In addition, a Bandwidth Test shall be performed on all multimode optical fibers. These tests shall be performed on the completed end-to-end spans which include the near-end pre-connectorized single fiber cable assembly, outside plant as specified, and the far-end pre-connectorized single fiber cable assembly.

a. OTDR Test: The OTDR test shall be used to determine the adequacy of the cable installations by showing any irregularities, such as discontinuities, micro-bendings or improper splices for the cable span under test. Hard copy fiber signature records shall be obtained from the OTDR for each fiber in each span and shall be included in the test results. The OTDR test shall be measured in both directions. A reference length of fiber,31 m minimum, used as the delay line shall be placed before the new end connector and after the far end patch panel connectors for inspection of connector signature. Conduct OTDR test and provide calculation or interpretation of results in accordance with EIA TIA/EIA-526-7 for single-mode fiber. Splice losses shall not exceed .2 dB as measured by the OTDR and .02 dB as measured by the splicing machine.

b. Attenuation Test: End-to-end attenuation measurements shall be made on all fibers, in both directions, using a 1310 nanometer light source at one end and the optical power meter on the other end to verify that the cable system attenuation requirements are met in accordance with EIA TIA/EIA-526-7 for single-mode fiber optic cables. The measurement method shall be in accordance with EIA TIA/EIA-455-61A. Attenuation losses shall not exceed .4 dB

per Km @ 1310 nm and .3 dB/Km @ 1550 nm.

-- End of Section --

SECTION 16713

FIBER OPTIC (FO) OUTSIDE PLANT (OSP) MEDIA

PART 1 GENERAL

1.1 REFERENCES

The publications listed below form a part of this specification to the extent referenced. The publications are referred to within the text by the basic designation only.

ELECTRONIC INDUSTRIES ALLIANCE (EIA)

EIA TIA/EIA-472D000-A	(1993) Fiber Optic Communications Cable for Outside Plant Use
EIA TIA/EIA-4750000-C	(1996) Generic Specifications for Fiber Optic Connectors (ANSI)
EIA TIA/EIA-526-14A	(1998) OFSTP-14A Optical Power Loss Measurements of Installed Multimode Fiber Cable Plant (ANSI/TIA/EIA-526-14A)
EIA TIA/EIA-568-B.1	(2001; Addendum 2001) Commercial Building Telecommunications Cabling Standard - Part 1: General Requirements (ANSI/TIA/EIA-568-B.1)
EIA TIA/EIA-568-B.3	(2000; Addendum 2002) Optical Fiber Cabling Components Standard (ANSI/TIA/EIA-568-B.3)
EIA TIA/EIA-569-A	(1998; Addenda 2000, 2001) Commercial Building Standards for Telecommunications Pathways and Spaces (ANSI/TIA/EIA-569-A)
EIA TIA/EIA-590-A	(1997) Standard for Physical Location and Protection of Below Ground Fiber Optic Cable Plant
EIA TIA/EIA-598-B	(2001) Optical Fiber Cable Color Coding

INSTITUTE OF ELECTRICAL AND ELECTRONICS ENGINEERS (IEEE)

IEEE C2	(2002) National Electrical Safety Code

INSULATED CABLE ENGINEERS ASSOCIATION (ICEA)

ICEA S-87-640	(1999) Fiber Optic Outside Plant Communications Cable

NATIONAL ELECTRICAL MANUFACTURERS ASSOCIATION (NEMA)

NEMA RN 1	(1998) Polyvinyl Chloride (PVC) Externally Coated Galvanized Rigid Steel Conduit and Intermediate Metal Conduit

NEMA TC 2	(2003) Electrical Polyvinyl Chloride (PVC) Tubing and Conduit
NEMA TC 3	(2004) Polyvinyl Chloride PVC Fittings for Use with Rigid PVC Conduit and Tubing
NEMA TC 6 & 8	(2003) Polyvinyl Chloride PVC Plastic Utilities Duct for Underground Installations
NEMA TC 9	(2004) Fittings for Polyvinyl Chloride (PVC) Plastic Utilities Duct for Underground Installation

NATIONAL FIRE PROTECTION ASSOCIATION (NFPA)

NFPA 70	(2005) National Electrical Code

1.2 RELATED REQUIREMENTS

Section 16050 BASIC ELECTRICAL MATERIALS AND METHODS applies to this section with additions and modifications specified herein.

1.3 SUBMITTALS

The following shall be submitted in accordance with Section 01335 SUBMITTAL PROCEDURES for design built project:

SD-03 Product Data

Fiber Optic Media Types

Fiber Optic Splices Material Data

Fiber Optic Terminations and Connectors Material Data

SD-06 Test Reports

Fiber Optic Factory Test Plan

Fiber Optic Field Tests Plan

1.4 DELIVERY, STORAGE, AND HANDLING

Ship media to job site on factory reels or in factory cartons. Radius of the reel drum shall not be smaller than the minimum bend radius recommended by the manufacturer for the media. Wind cable on the reel so that unwinding can be done without kinking the cable. Two meters of cable at each end of the reel must be readily accessible for testing. Provide a permanent label on each reel showing length, media, identification number, and date of manufacture. Provide water resistant label and ink on the labels. Apply end seals to each end of the media after testing and before terminating to prevent moisture from entering the cable while stored at the job site. Reels with cable shall be suitable for outside storage conditions when temperature ranges from minus 40 degrees C to plus 65 degrees C, with relative humidity from zero to 100 percent. Equipment, other than FO media, delivered and placed in storage shall be stored with protection from weather, humidity and temperature variation, dirt and dust,

or other contaminants.

PART 2 PRODUCTS

2.1 MATERIALS AND EQUIPMENT

Materials and FO system material shall be the standard products of a manufacturer regularly engaged in the manufacturer of such products and shall be the manufacturer's standard commercially available product.

2.1.1 Fiber Optic Media Types

FO media shall meet all performance requirements of EIA TIA/EIA-568-B.1, EIA TIA/EIA-568-B.3 and the physical requirements of ICEA S-87-640 and EIA TIA/EIA-598-B.

Provide multimode Fiber optic cables 6 strands 62.5/125 microns terminated with "ST" connectors at each end as shown on drawings.

2.1.1.1 Multi Mode Fiber Media

Provide FO media with outer sheath jacket, ripcords, water blocking material, core tube, and core fibers as installed in a permanent underground pathway system as shown on the drawings. FO media shall have an all glass, graded index material with a nominal core diameter of 62.5 microns. Provide a cladding material for the fiber which is compatible with the core. Media transmission window shall be centered at 850 and 1300 nanometer wavelengths, attenuation at 1300 nanometers shall be less than 2.0 dB per kilometer. Minimum bandwidth shall be 500 mHz-Km.

2.2 FIBER OPTIC TERMINATIONS AND CONNECTORS

FO connectors shall comply with EIA TIA/EIA-4750000-C and EIA TIA/EIA-604-2 Type "ST" on both ends of cable.

2.3 FIBER OPTIC PATHWAY SYSTEM

Provide an FO pathway system including raceway conduit, duct system, and maintenance manholes and handholes as shown on the drawings. Pathway materials shall comply with EIA TIA/EIA-569-A, and the following commercial standards for construction materials, NEMA RN 1 (PVC), NEMA TC 2 (PVC), NEMA TC 3 (PVC), NEMA TC 6 & 8, and NEMA TC 9.

2.3.1 Conduit

Conduit as specified in Section 16375 ELECTRICAL DISTRIBUTION SYSTEM, UNDERGROUND.

2.4 FACTORY FO QUALITY CONTROL

Conduct factory quality tests of FO media as required by EIA TIA/EIA-472D000-A.

2.5 PREPARATION FOR DELIVERY

Ship media on reels according to required lengths shown on drawings. Provide 2 meters pigtails on each end of media accessible for testing. Reel drum shall comply with manufacturers recommended bend radius for the media. Wind media on reel so that unreeling can be done without kinking

the media. Attach a permanent waterproof label with indelible text on reel showing the length, media type, bandwidth, attenuation, and date of manufacture.

2.6 FACTORY REEL TEST

Test 100 percent OTDR test of FO media at the factory prior to shipment in accordance with EIA TIA/EIA-568-B.1 and EIA TIA/EIA-568-B.3. Use EIA TIA/EIA-526-14A Method B for multi mode fiber measurements. Calibrate OTDR to show anomalies of 0.2 dB minimum. Provide digitized or photographic traces to the Contracting Officer.

2.7 MISCELLANEOUS ITEMS

2.7.1 FO Media Tags

Provide stainless steel, 41.25 mm in diameter 1.58 mm thick, and circular in shape.

2.7.2 Buried Warning and Identification Tape

Provide color, type and depth of tape as specified in paragraph "Buried Warning and Identification Tape" in Section 02316 EXCAVATION, TRENCHING, AND BACKFILLING FOR UTILITIES SYSTEMS, FO media must be marked and protected as required by EIA TIA/EIA-590-A.

PART 3 EXECUTION

3.1 INSTALLATION

Install and test the FO media in accordance with contract drawings, specifications, IEEE C2, NFPA 70, and EIA TIA/EIA-590-A. Provide all necessary power, utility services, technicians, test equipment, calibration equipment as required to perform reel and final acceptance tests of the media. All media which fail the factory or reel tests or final acceptance field tests shall be replaced and re-tested at the contractors expense. Splices are not permitted unless shown on the construction drawings. Field test splices within 24 hours after splice installation. Splices shall be tested to demonstrate a maximum 0.2 dB loss. Provide a splice box for each field splice. Provide a minimum of 2 meters for routing and testing media. Protect media ends of unspliced FO media during splicing operations.

3.1.1 Contractor Damage

Promptly repair indicated utility and communications lines or systems damaged during site preparation and construction. Damage to lines or systems not indicated, which are caused by contractor operations, shall be treated as "Changes" under the terms of the Contract clauses. When Contractor is advised in writing of the location of a non-indicated line or system, such notice shall provide that portion of the line or system with "indicated" status in determining liability for damages. In every event, immediately notify the Contracting Officer of damage.

3.1.2 Direct Burial System

Installation shall be in accordance with EIA TIA/EIA-590-A. Under railroad tracks, paved areas, and roadways install cable in conduit encased in concrete. Slope ducts to drain. Excavate trenches by hand or mechanical trenching equipment. Provide a minimum cable cover of 610 mm below

finished grade. Trenches shall be not less than 155 mm wide and in straight lines between cable markers. Do not use cable plows. Bends in trenches shall have a radius of not less than 915 mm. Where two or more cables are laid parallel in the same trench, space laterally at least 75 mm apart. When rock is encountered, remove it to a depth of at least 75 mm below the cable and fill the space with sand or clean earth free from particles larger than 6 mm. Do not unreel and pull cables into the trench from one end. Cable may be unreeled on grade and lifted into position. Provide color, type and depth of warning tape as specified in Section 02316 EXCAVATION, TRENCHING, AND BACKFILLING FOR UTILITIES SYSTEMS.

3.1.2.1 Media Placement

a. Separate FO media crossing other cables or metal piping from the other cables or pipe by not less than 75 mm of well tamped earth. Do not install FO media under or above traffic signal loops.

b. Media shall be in one continuous length without splices except where splices are shown on the drawings.

c. Do not allow bends in media which exceed the manufacturers minimum recommended radii. Do not bend media to a radius less than 10 times the outside diameter of the media.

d. Leave a horizontal slack of approximately 915 mm in the ground on each end of cable runs, on each side of connection boxes, and at points where connections are brought above ground. Where cable is brought above ground, leave additional slack to make necessary connections.

3.1.3 Underground Duct

Construct underground duct as specified in Section 16375 ELECTRICAL DISTRIBUTION SYSTEM, UNDERGROUND. Encase in concrete any ducts under roads, paved areas, or railroad tracks.

3.1.4 Reconditioning of Surfaces

3.1.4.1 Unpaved Surface Treatment

Restore unpaved surfaces disturbed during the installation of duct or direct burial cable to their original elevation and condition. Carefully preserve existing sod and topsoil and replace after the back-filling is completed. Replace damaged sod with sod of quality equal to that removed. Where the surface is disturbed in a newly seeded area, re-seed the restored surface with the same quantity and formula of seed as that used in the original seeding.

3.1.4.2 Paving Repairs

Where trenches, pits, or other excavations are made in existing roadways and in other areas of pavement where surface treatment of any kind exists, restore such surface treatment or pavement to the same thickness and to the same kind as previously existed. Surface treatment or pavement shall also match and tie into the adjacent and surrounding existing surfaces.

3.1.5 Cable Pulling

Test duct lines with a mandrel and swab out to remove foreign material

before the pulling of FO media. Avoid damage to cables in setting up pulling apparatus or in placing tools or hardware. Do not step on media when entering or leaving the maintenance holes. Do not place media in ducts other than those shown without prior written approval of the Contracting Officer. Roll cable reels in the direction indicated by the arrows painted on the reel flanges. Set up media reels on the same side of the maintenance hole as the pathway section in which the media is to be placed. Level the reel and bring into proper alignment with the pathway section so that the media pays off from the top of the reel in a long smooth bend into the duct without twisting. Under no circumstances shall the media be paid off from the bottom of the reel. Check the equipment set up prior to beginning the media cable pulling to avoid an interruption once pulling has started. Use a cable feeder guide of suitable dimensions between media reel and face of duct to protect media and guide cable into the duct as it is paid off the reel. As media is paid off the reel, lubricate and inspect media for sheath defects. When defects are noticed, stop pulling operations and notify the Contracting Officer to determine required corrective action. Stop media pulling if reel binds or does not pay off freely. Rectify cause of binding before resuming pulling operations. Provide media lubricants recommended by the cable manufacturer. Provide 1 meter of spare media in all manholes and enclosures for final termination and testing.

3.1.5.1 FO Media Tensions

Install FO media as shown on construction drawings. Provide devices to monitor media tension during installation. Do not exceed manufacturers recommended maximum FO tensions and bending radii during installation.

3.1.5.2 Installation of Media in Maintenance Manholes, Handholes, and Vaults

Do not install media utilizing the shortest route, but route along those walls providing the longest route and the maximum spare cable lengths. Form cables to closely parallel walls, not to interfere with duct entrances, and support media on brackets and cable insulators at a maximum of1220 mm. In existing maintenance manholes, handholes, and vaults where new ducts are to be terminated, or where new media are to be installed, modify the existing installation of media, cable supports, and grounding as required with cables arranged and supported as specified for new media.

3.1.6 Grounding

Ground exposed non current carrying metallic parts of telephone equipment, media sheaths, media splices, and terminals.

3.1.7 Housekeeping

The Contractor shall be responsible for cleaning up work area and maintaining the work area in orderly condition.

3.2 FIELD QUALITY CONTROL

Provide the Contracting Officer 10 working days notice prior to each reel and final acceptance test. Provide labor, equipment, and incidentals required for testing. Correct defective material and workmanship disclosed as the results of the tests. Furnish a signed copy of the test results to the Contracting Officer within 3 working days after the tests for each segment of construction are completed. Perform testing as construction progresses and do not wait until all construction is complete before

starting field tests.

3.2.1 Field Reel Tests

Perform the following tests on FO media at the job site before it is removed from the cable reel. For cables with factory installed pulling eyes, these tests shall be performed at the factory and certified test results shall accompany the media. Perform OTDR tests with media on reels and compare factory and field test data.

3.2.1.1 Reel Test Results

Provide results of reel tests to the Contracting Officer at least 5 working days before installation is to commence. Results shall indicate reel number of the media, manufacturer, type and number of fiber tested, and recorded readings. When reel tests indicate that the media does not comply with factory reel test results remove the media from the job site and replace with compliant media.

3.2.2 Final Acceptance Tests

Perform end-to-end tests including power meter light source and OTDR tests. Perform OTDR measurements as required by EIA TIA/EIA-568-B.1 and EIA TIA/EIA-568-B.3. Multi mode fiber shall be tested in accordance with EIA TIA/EIA-526-14A (Optical Power Loss).

3.2.2.1 Test Results

Provide results of final acceptance tests (attenuation tests, OTDR traces, etc.), to the Contracting Officer at least 5 working days after completion of tests.

-- End of Section --

PAKTIKA ANA BRIGADE

PAKTIKA, AFGHANISTAN

26 June 2007

US Army Corps of Engineers
Transatlantic Programs Center

PROJECT TABLE OF CONTENTS

DIVISION 01 - GENERAL REQUIREMENTS

01015 TECHNICAL REQUIREMENTS

DIVISION 02 - SITE CONSTRUCTION

02220 DEMOLITION
02231 CLEARING AND GRUBBING
02300 EARTHWORK
02315 EXCAVATION, FILLING AND BACKFILLING FOR BUILDINGS
02316 EXCAVATION, TRENCHING, AND BACKFILLING FOR UTILITIES SYSTEMS

DIVISION 03 - CONCRETE

03100 STRUCTURAL CONCRETE FORMWORK
03200 CONCRETE REINFORCEMENT
03256 HYDROPHILIC RUBBER WATERSTOPS
03300 CAST-IN-PLACE STRUCTURAL CONCRETE
03351 PENETRATING LIQUID CONCRETE FLOOR TREATMENT

DIVISION 04 - MASONRY

04200 MASONRY

DIVISION 05 - METALS

05120 STRUCTURAL STEEL
05500 MISCELLANEOUS METAL
05811 EXPANSION JOINT SYSTEMS

DIVISION 06 - WOOD AND PLASTICS

06411 ARCHITECTURAL CASEWORK

DIVISION 07 - THERMAL AND MOISTURE PROTECTION

07112 BITUMINOUS DAMPPROOFING
07212 MINERAL FIBER BLANKET INSULATION
07214 BOARD AND BLOCK INSULATION
07416 STRUCTURAL STANDING SEAM METAL ROOF (SSSMR) SYSTEM
07600 SHEET METALWORK, GENERAL
07720 RIDGE VENTS AND ROOF VENTILATORS
07840 FIRESTOPPING
07900 JOINT SEALANTS

DIVISION 08 - DOORS AND WINDOWS

08110 STEEL DOORS AND FRAMES
08330 OVERHEAD ROLLING DOORS
08520 ALUMINUM WINDOWS
08581 BLAST RESISTANT TEMPERED GLASS WINDOWS
08710 DOOR HARDWARE
08810 GLASS AND GLAZING

DIVISION 09 - FINISHES

09100 METAL SUPPORT ASSEMBLIES
09225 CEMENT PLASTER
09250 GYPSUM BOARD
09310 CERAMIC TILE, QUARRY TILE, AND PAVER TILE
09421 TERRAZZO TILE
09900 PAINTS AND COATINGS

DIVISION 10 - SPECIALTIES

10191 CUBICLE CURTAIN, TRACK AND HARDWARE
10201 METAL WALL AND DOOR LOUVERS
10270 ACCESS FLOORING
10800 TOILET ACCESSORIES

DIVISION 11 - EQUIPMENT

11025 FORCED ENTRY RESISTANT COMPONENTS
11193 DETENTION HOLLOW METAL FRAMES, DOORS, AND DOOR FRAMES
11194 DETENTION HARDWARE
11311 PARALLEL PLATE , GRAVITY OIL-WATER SEPARATOR FOR POWER PLANT
11400 FOOD SERVICE EQUIPMENT
11405 PREFABRICATED WALK-IN REFRIGERATORS AND COOLERS

DIVISION 12 - FURNISHINGS

12600 FURNITURE, FURNISHINGS AND EQUIPMENT (FFE)

DIVISION 13 - SPECIAL CONSTRUCTION

13080 SEISMIC PROTECTION FOR MISCELLANEOUS EQUIPMENT
13090 X-RAY SHIELDING
13100 LIGHTNING PROTECTION SYSTEM
13121 METAL BUILDING SYSTEMS
13202 FUEL STORAGE SYSTEMS
13214 WASTE PETROLEUM TANKS
13216 UNDERGROUND PETROLEUM TANKS
13401 FLOW MEASURING EQUIPMENT
13855 FIRE DETECTION EQUIPMENT

DIVISION 14 - CONVEYING SYSTEMS

14630 OVERHEAD ELECTRIC CRANES

DIVISION 15 - MECHANICAL

15050 BASIC MECHANICAL MATERIALS AND METHODS
15080 THERMAL INSULATION FOR MECHANICAL SYSTEMS
15192 FUEL OIL PIPING
15193 GASOLINE/DIESEL DISPENSING SYSTEMS
15400 PLUMBING, GENERAL PURPOSE
15690 EVAPORATIVE COOLING SYSTEMS
15700 UNITARY HEATING AND COOLING EQUIPMENT
15702 COMPUTER ROOM AIR CONDITIONING UNITS
15768 ELECTRIC SPACE HEATING EQUIPMENT
15835 CEILING FANS
15895 AIR SUPPLY, DISTRIBUTION, VENTILATION, AND EXHAUST SYSTEM
15950 HEATING, VENTILATING AND AIR CONDITIONING (HVAC) CONTROL SYSTEMS

15990 TESTING, ADJUSTING, AND BALANCING OF HVAC SYSTEMS

DIVISION 16 - ELECTRICAL

16050 BASIC ELECTRICAL MATERIALS AND METHODS
16070 SEISMIC PROTECTION FOR ELECTRICAL EQUIPMENT
16175 LOCAL CONTROL PANELS FOR SYSTEMS
16263 DIESEL-GENERATOR SET STATIONARY 100-2500 KW, WITH AUXILIARIES
16272 UNIT SUB-STATION TYPE TRANSFORMERS
16370 ELECTRICAL DISTRIBUTION SYSTEM, AERIAL
16375 ELECTRICAL DISTRIBUTION SYSTEM, UNDERGROUND
16402 INTERIOR DISTRIBUTION SYSTEM
16403 PANELBOARDS
16410 AUTOMATIC TRANSFER SWITCHES
16442 SWITCHBOARDS AND SWITCHGEAR
16475 POWER SYSTEM
16510 INTERIOR LIGHTING
16710 BUILDING TELECOMMUNICATIONS CABLING SYSTEM
16711 TELECOMMUNICATIONS OUTSIDE PLANT (OSP)
16713 FIBER OPTIC (FO) OUTSIDE PLANT (OSP) MEDIA

-- End of Project Table of Contents --

SECTION 01015
TECHNICAL REQUIREMENTS

1. GENERAL

1.1 The Contractor's design and construction must comply with technical requirements contained herein. The Contractor shall provide design and construction using the best combination of cost, construction efficiency, system durability, ease of maintenance and environmental compatibility. The Contractor is responsible for master planning and site design; site development, including grading and storm water management; water well, water line, sanitary sewer, and storm sewer construction; road construction; electric; security systems, communications systems and utility buildings required in support of infrastructure and utilities.

1.2 These design and product requirements are minimum standards. The Contractor is encouraged to propose alternate design or products (equipment and material) that are more commonly used in the region; equipment and materials will be equally or more cost effective or allow for more timely completion, but furnish the same system durability, ease of maintenance and environmental compatibility. The Contractor will be required to submit information as requested by the Contracting Officer to make a comparison of the proposed alternate. All variations must be approved by the Contracting Officer. Life expectation for this facility is for twenty-five (25) years minimum. Material and methods used for this project must meet this design requirement. All requirements set forth in the RFP, but not included in the Scope of Work (SOW) shall be considered as set forth in both, and vice versa. Contractor shall provide all hardware, fixtures, etc. to make this a complete usable facility. Any time two or more statements in the RFP, building codes, or standards are in conflict; the most stringent shall apply.

This project consists of new construction of the infrastructure and buildings for an ANA Brigade as defined in Section 01010 SCOPE OF WORK and shall be executed in accordance with the following requirements. The site for this contract is at Paktika, Afghanistan.

1.3 ASBESTOS CONTAINING MATERIALS

Asbestos containing material (ACM) shall not be used in the design and construction of this project. If no other material is available which will perform the required function or where the use of other materials would be cost prohibitive, a waiver for the use of asbestos-containing materials must be obtained from the Contracting Officer.

1.4 SAFETY

1.4.1 UXO/MINE DISCOVERY DURING PROJECT CONSTRUCTION

It is the responsibility of the Contractor to be aware of the risk of encountering UXO and to take all actions necessary to assure a safe work area to perform the requirements of this contract. If, after the entire site has been cleared of UXO/mines per the International Mine Action Standards (IMAS) and clearance is done to the anticipated

foundation depth, the Contractor becomes aware of or encounters UXO or potential UXO during construction, the Contractor shall immediately stop work at the site of the encounter, move to a safe location, notify the COR, and mitigate any delays to scheduled or unscheduled contract work. The Contractor shall remove and dispose of UXOs per the International Mine Action Standards (IMAS). These standards can be found at http://www.mineactionstandards.org. The Contractor assumes the risk of any and all personal injury, property damage or other liability, arising out of and resulting from any Contractor action hereunder. In these cases, the Contractor shall be required to identify and dispose of the ordnance.

NOTE: For previous Demining information, the following points of contact
from the UN Mine Action Center for Afghanistan are provided:

Reiko Kurihara, project manager, email reiko@unmaca.org
Cell phone: +93 070 284 686
Sandy Powell, chief Operations Officer, sandy@unmaca.org
Cell phone: +93 (0) 79 330 992

1.4.2 ACTIVITY HAZARD ANALYSIS (AHA)

a. Activity Hazard Analysis shall be prepared in accordance with the Corps of Engineers Safety and Health Requirements Manual, EM 385-1-1.

b. Hazard analyses will be prepared and briefed by personnel that are knowledgeable in UXO and explosives safety standards and requirements. These personnel should understand the specific operational requirement and hazard analysis methodologies. A hazard analysis will be performed for each activity to determine the significance of any potential explosive-related hazards. Explosive residues may be discovered or exposed during UXO operations in the form of powder or various granular and powder based pellets. These contaminants can enter the body through the skin or by ingestion if proper personal hygiene practices are not followed. Explosive fillers such as white phosphorus are dangerously reactive in air and acute exposure can result in serious injury to the skin, eyes, and mucous membranes. They are also a fire hazard.

Safety requirements (or alternatives) that will either eliminate the identified hazards, mitigate or control them to reduce the associated risks to an acceptable level will be developed. The adequacy of the operational and support procedures that will be implemented to eliminate, control, or abate identified hazards or risks will then be evaluated and a second risk assessment completed to verify that a satisfactory safety level has been achieved.

1.5 NOTIFICATION OF NONCOMPLIANCE

The Contracting Officer will notify the Contractor of any detected noncompliance with the foregoing requirements. The Contractor shall take immediate corrective action after receipt of such notice. Such notice, when delivered to the Contractor at the work site, shall be deemed sufficient for the purpose of notification. If the Contractor fails or refuses to comply promptly, the Contracting Officer may issue an order stopping all or part of the work until satisfactory corrective action has been taken. The Contractor shall make no part of the time

lost due to such stop orders the subject of claim for extension of time or for excess costs or damages.

1.6 WARRANTY

The Contractor shall repair and/or replace all defective materials or workmanship, except for roofs, at his own cost for a warranty period of one (1) year commencing upon the date of final acceptance of the entire project. See roof construction under RFP for warranty.

1.7 TEMPORARY STRUCTURES

The Contractor shall erect suitable temporary fences, lighting, and necessary structures to safeguard the site, materials and plant against damage or theft and for the protection of the general public and shall adequately maintain the same throughout the course of the contract.

1.8 MAN-HOUR EXPOSURE REPORTING REQUIREMENTS

Prime Contractors are required to maintain records for both prime and subcontractor employees to include exposure work hours, a log of occupational injuries and illness and local/international economic data. The Prime Contractor shall submit the information on CEAED Form 385-1-1 to the COR by the 25th of each month. The COR shall submit the information to the Chief, Safety, and the AED Economist by the end of the month. The COR shall assure that the form is properly filled out and that the complete contract number or task order number are clearly indicated. Section III of the form is the Economic Analysis Report and it must contain data itemized by location if the contract has more than one work location. It is extremely important that the economic data be broken out by work location. The contractor may develop their own spreadsheet for a contract with multiple work sites provided the spreadsheet includes the basic information detailed on the Economic Data Report. Accident exposure data does not need to be itemized by location and should be submitted as a total for the entire contract.

2. CIVIL - NOT USED

3. ARCHITECTURAL

3.1 GENERAL

3.1.1 The Scope of Work is stated in Section 01010. All materials approved shall become standardized material to be used throughout the facilities under contract. Different sub-contractors shall not use different materials or standards under the contract.

3.1.2 Intent of the project is to meet the requirements per the RFP, Codes and Standards, and if possible use locally procured materials and labor to the maximum extent possible.

3.1.3 The site is located on undeveloped land. Reference the site map for the project location.

3.1.4 The Contractor shall survey and produce detailed documentation of the site utilities, buildings, and systems for the entire compound. Contractor shall perform detailed site measurement as needed to verify

available printed and electronic documentation. Drawings shall clearly distinguish existing conditions for work performed under this contract. Documentation work shall be performed on computer assisted design and drafting (CADD). New documentation shall be performed on AutoCAD version 2006, conforming to A/E/C Tri Services standards. Units shall be metric. Language for all documents shall be in American English.

3.2 DESIGN PRODUCTS

3.2.1 General

The following are contract deliverables which expound upon and finalize the Design parameters/requirements outlined within the contract documents. They shall be prepared in such a fashion that the Prime Contractor is responsible to the Government and not as an internal document between the Prime Contractor and its Sub Contractors, Vendors, Suppliers, etc.

3.2.2 Design Analysis

The design analysis should be written in the English Language for review by the Government for all buildings and to have indexes, table of contents and each page numbered. Each building shall be listed as indicated in Section 01010. The design analysis is a written explanation of the project design which is expanded and revised (updated) as the design progresses. The design analysis shall contain all explanatory material giving the design rationale for any design decisions which would not be obvious to an engineer reviewing the final drawings and specifications. The design analysis contains the criteria for and the history of the project design, including criteria furnished by the Government, letters, codes, references, conference minutes, and pertinent research. Design calculations, computerized and manual, are included in the design analysis. Narrative descriptions of design solutions are also included. Written material may be illustrated by diagrams and sketches to convey design concepts. Catalog cuts and manufacturer's data for all equipment items required, shall be submitted. Copies of all previous design phase review comments and the actions assigned to them shall be included with each submission of the design analysis. Specific requirements for the design analysis, listed by submittal phase, are contained hereinafter. Provide Code Analysis for each building based on the following items and code sections.

3.2.3 Code Analysis

The following analysis information is required for all buildings submitted in this proposal. List: Seismic Design Category, Wind Speed, and Snow Load.

Analysis Items	Code References - International Building Code (IBC) 2003
1. Type of Construction	IBC Chapter 6
2. Occupancy Classification	IBC Chapter 3 and Table 302.3.2

3. Actual Allowable Area	IBC 503, 505-508 & Table 503
4. Actual Allowable Height	IBC 504 & Table 503
5. Occupant Load (per use)	IBC 1004 & Table 1004.1.2
6. Exits Required/Provided	IBC 1004 & Table 1004.1.2
	IBC 1014, 1018, and 1018.2
7. Required Opening Protection	IBC Table 602
8. Fire Resistive Construction	IBC Table 601

3.2.4 Design Calculations

The design calculations shall be presented in a clean and legible form incorporating a title page and index.

3.2.5 Specifications

Specifications developed for fully designed facilities shall be used. Utility buildings, that will be design-build, shall match the fully designed facilities for type of construction, finishes and overall characteristics. SpecsIntact shall be used for specifications format.

3.2.6 Ambiguities and indefinite specifications

Ambiguities, indefinite specification requirements (e.g., highest quality, workmanlike manner, as necessary, where appropriate, as directed etc.) and language open to interpretation is unacceptable.

4. STRUCTURAL

4.1 Design

Design shall be performed and signed by a structural engineer. The publications listed below form a part of this specification to the extent referenced. Other international standards that comply with these standards may be used upon approval by the Contracting Officer. The publications are referred to within the text by the basic designation only.

All required documents, including drawings, specifications, and design analysis, shall be prepared in accordance with Section 01335 Submittal Procedures for Design Build Projects. Specific submittal requirements in these sections supplement the requirements of Section 01335.

The design analysis shall include detailed calculations and any additional information required, and the information listed below, when applicable.

All structures and all parts of the structures shall be designed and constructed to support safely all loads without exceeding the allowable stress for the materials of construction in the structural members and connections.

4.2 References

American Society of Civil Engineers, Minimum Design Loads for Buildings and Other Structures, ASCE 7-2002

American Concrete Institute, Building Code Requirements for Structural Concrete, ACI-318-2005

International Building Code, IBC-2003

American Society for Testing and Materials (ASTM) Publication, Deformed and Plain Billet-Steel Bars for Concrete Reinforcement, ASTM A 615-2004b

ASTM Publication, Steel Welded Wire Fabric, Plain for Concrete Reinforcement ASTM A 185-2002

ASTM Publication, Potential Alkali Reactivity of Aggregates (Mortar-Bar Method)

American Institute of Steel Construction, Specifications for Structural Steel Buildings, AISC – 9th Edition

American Iron and Steel Institute, Specifications for Design of Cold-Formed Steel Structural Members AISI – 1996

Building Code Requirements for Masonry Structures, ACI 530-2005/ASCE 5-2005/TMS 402-2005.

Metal Building Manufacturers Association. MBMA Low Rise Building System Manual - 2002

4.3 Dead and Live Loads

Dead and live loads used for design shall be in accordance with the International Building Code IBC-2003. Bridges shall be designed for all the applicable design loads and load combinations as defined by the AASHTO Code.

4.4 Wind Loads

Wind loads shall be calculated in accordance with IBC-2003 design standards using a "3-second gust" wind speed of 125 km/hr.

4.5 Seismic

The structure and all parts thereof shall be designed for the seismic requirements as defined by the International Building Code, IBC 2003. For Afghanistan, use Spectral Response S_s= 1.28g and S_1=0.51g, Site soil classification will be determined by Geotechnical investigations at site.

4.6 Concrete

Concrete shall be in accordance with Specification 03300.

4.7 Structural Steel

Structural steel shall be designed and constructed in accordance with the provisions of AISC 13th Edition and design of cold-formed steel structural members shall be in accordance with the provisions of American Iron and Steel Institute, Specifications for Design of Cold-Formed Steel Structural Members-1996, and specification 05120.

4.8 MASONRY.

Masonry shall be designed and constructed in accordance with the provisions of ACI 530-2005/ASCE 5-2005/TMS 402-2005. Mortar shall be Type S and conform to ASTM C 270-94. Masonry shall not be used below grade. Masonry shall be in accordance with Specification 04200.

4.9 PRE-ENGINEERED METAL BUILDING SYSTEM.

Metal building systems shall be in accordance with Specification 13121.

4.10 Force Protection.

Force protection shall comply with the requirements of CENTCOM AT/FP and DoD Minimum Antiterrorism Standards for Buildings; UFC 4-010-01 for medium level of protection.

4.11 Foundations

Foundations shall be in accordance with the Geotechnical requirements of the site and manufactures recommendations.

5. GEOTECHNICAL INVESTIGATION AND REPORT

5.1 Site Specific Information

Site specific geotechnical information necessary to design and construct the foundations, pavements, and other geotechnically related items contained in this project shall be the Contractor's responsibility. Many facilities in this project have already been fully designed based on geotechnical assumptions, not on actual site conditions. The Contractor is responsible for verifying, from his geotechnical investigation as described herein, that all designs presented in this project package are sufficient and will function as intended. If the Contractor determines that designs are not sufficient for site conditions as determined by his geotechnical investigation, the Contractor shall contact the Contracting Officer for direction. The Contractor shall determine all necessary geotechnical conditions by appropriate field and laboratory investigations and supporting calculations. However, as a minimum for structures, the Contractor shall advance three (3) borings within the building footprint of any major structure and three (3) test pits within the building footprint of any minor structure. The depths of these explorations shall be sufficient to determine the subsurface conditions within the influence of the structure's foundation system. For purposes of this paragraph,

a major structure is any structure that meets any of the following criteria: a) reinforced concrete famed structures with a building footprint in excess of 1,000 sq. m., b) steel framed structures with a building footprint in excess of 3,000 sq. m., c) a structure that has a height equal to or greater than one and a half stories, d) steel or concrete tanks in excess of 350 cubic meters. A minor structure is any structure that does not meet any of the four major structure criteria above. As a minimum for pavements such as hard stands and parking lots, except roads, the Contractor shall excavate three (3) test pits for pavements less than or equal to 7,500 sq. m. and one (1) test pit for each additional 5,000 sq. m. of pavement or fraction thereof. As a minimum for roads, the Contractor shall excavate three (3) test pits for pavements less than or equal to 200 linear meters and one (1) test pit for each additional 200 linear meters or fraction thereof.

5.2 Geotechnical Report

The Contractor shall produce a detailed geotechnical report containing the field exploration and testing results, laboratory testing results, evaluations, recommendations, calculations and descriptive supporting text. Information in the report shall include, but not be limited to: existing geotechnical (e.g., surface and subsurface) conditions, location of subsurface exploration logs, exploration point, foundations selected, bearing capacity, pavement design criteria (e.g., CBR values, K Values), ground water levels, and construction materials (e.g., concrete cement, asphalt and aggregates). Two copies of the detailed geotechnical report shall be submitted to the Contracting Officer.

5.3 Geotechnical Qualifications

All geotechnical engineering design parameters shall be developed by a geotechnical engineer or geotechnical firm responsible to the Contractor. The geotechnical engineer or geotechnical firm shall be qualified by: education in geotechnical engineering; professional registration; a minimum of ten (10) years of experience in geotechnical engineering design.

5.4 Design Certification

The Contractor shall certify in writing that the design of the project has been developed consistent with the site-specific geotechnical conditions. The certification shall be stamped by the geotechnical engineer or geotechnical firm and shall be submitted with the final design.

6. MECHANICAL

6.1 SCOPE OF WORK

6.1.1 General

The Contractor shall design, supply, fabricate and install new heating, ventilation and air-conditioning systems and special mechanical systems in the facilities or structures required as part of site utilities systems facilities and as identified under the Civil and Architectural

narratives hereinbefore. Engineering practices recommended in ASHRAE Handbooks shall be followed in regard to special conditions and problems not specifically covered herein.

The work also includes the delivery to site, erection, setting to work, adjusting, testing and balancing, commissioning, and handing over in full operating conditions all of the ventilation equipment and associated mechanical works. All mechanical/electrical controls accessible by the general public shall be lockable and tamper proof.

6.1.2 Standard Products

All materials and equipment shall be standard product of a manufacturer regularly engaged in the manufacture of the product and shall comply with specification and performance requirements described in various mechanical construction specifications sections included in this contract.

6.1.3 Local Standards

Conflicts between criteria and local standards shall be brought to the attention of the Contracting Officer for resolution. In such instances, the Contractor shall furnish all available information with justification to the Contracting Officer.

6.1.4 Seismic Requirements

All mechanical and plumbing equipment and piping shall be installed to meet the seismic requirements as defined by the International Building Code, IBC 2000 and seismic response coefficients as identified in Paragraph 4 “Structural.”

6.2 DESIGN CRITERIA AND REQUIREMENTS

6.2.1 CODES, STANDARDS AND REGULATIONS

The design and installation of equipment, materials and works covered under the mechanical heating, air-conditioning and ventilation services shall conform to the following standards, codes and regulations as applicable except where otherwise indicated under particular clause. The publications to be taken into consideration shall be those of the most recent editions. Standards other than those mentioned herein may be accepted provided that the standards chosen are internationally recognized and meet the minimum requirements of the specified standards. The Contractor shall submit proof of equivalency to the Contracting Officer for approval.

IBC – International Building Code 2000

IMC – International Mechanical Code

NFPA - National Fire Protection Association

ASHRAE – American Society of Heating, Refrigeration and Air-Conditioning Engineers

AABC - Associated Air Balance Council (National Standards for Total System Balance)

ARI - Air-Conditioning and Refrigeration Institute

ASME - American Society of Mechanical Engineers

ASTM - American Society for Testing and Materials

AWS - American Welding Society

SMACNA - Sheet Metal and Air Conditioning Contractors' National Association

ACGIH - American Conference of Governmental Industrial Hygienists

6.2.2 Site Location:

Latitude: 32:00 degrees N
Longitude: 69:00 degrees E
Altitude: 2133 meters (7000 ft)

6.2.3 Outside Design Temperature

Summer: 36.1 C (97° F) DB and 16.7° C (62° F) WB.
Winter: -12.8° C (9° F) DB
Range of DB: Summer 11.1 °C (20° F)
Average Extreme Wind: 24 kph (15 mph)
Prevailing Wind Direction: XXX

6.2.4 Design Conditions

a. Inside Conditions: Summer.

Occupied, Administrative, and Special Use Areas: 25.5°C (78°F) DB, 50% RH.
Shop Areas: 29.4-38.8°C (85 - 102°F) DB.

b. Inside Conditions: Winter.

Occupied, Administrative, and Special Use Areas: 20°C (68°F) DB.
Shop Areas: Heated to 12.8 C (55 F) to prevent freezing of water lines or higher temperature if required for process control.

6.2.5 Ventilation Standards: Minimum

Ventilation (and air-conditioning) systems shall be designed to maintain positive pressure inside the building with respect to the exterior to minimize sand and dirt infiltration. This shall be achieved by allowing more outside air than total exhaust or make-up air requirements. Pressurization air shall typically range between 5-7 percent of the supply air.

(1) Administrative: 9.4 LPS (20 CFM) /person with air conditioning and 33.3 LPS/sq. m. (2 CFM/sq. ft.) with mechanical ventilation.

(2) Mechanical/Electrical Rooms: Mechanical ventilation sufficient to maintain space temperature.

(3) Maintenance Shop: 7 LPS (15 CFM)/person with air conditioning and 50 –83 LPS/sq. m. (3 to 5 CFM/sq. ft.) to maintain space temperature within 6 C (10F) of outdoor ambient if ventilation only is required.

(4) Toilet and Janitor Closets: Exhaust ventilation at 33.3 LPS / sq. m. (2 CFM per square foot of floor area) or 23.6 LPS (50 CFM) for each closet and urinal.

6.2.6 Roof and Wall Insulation. All facilities with comfort conditioning shall be provided with roof U-value of 0.142 W/(m².K) (0.025 BTU/hr/ft^2) and wall U-value of 0.43 W/(m².K) (0.077 BTU/hr/ft^2)or less. Buildings without comfort conditioning shall be insulated to prevent a build-up of internal temperature significantly above the ambient temperature.

6.2.7 Noise. The sound levels for various applications for both centrifugal and propeller type fans shall be as set forth in the ASHRAE Handbooks. Noise levels generated by HVAC systems shall not exceed NC 35 in occupied areas.

6.2.8 Smoke Detection. Smoke detection and emergency automatic controls shall be in accordance with NFPA 90A and NFPA 72.

6.2.9 Temperature Controls.

a. All central type air handling systems shall include seven-day programmable clock controls to allow for night setback and daily/weekend operational control settings for energy conservation.

b. Mini split units shall be equipped with wired controller with Cool/Heat/Auto/Fan operation modes, fan speed selection, temperature setting, timer and sleep modes and LCD display.

6.2.10 Mechanical Rooms

Locate main mechanical room on ground floor with doors opening to exterior. Access to mechanical spaces will be limited to authorized personnel. Mechanical closets shall be accessible from exterior or public corridor or breezeway.

6.2.11 Testing and Commissioning

The contract shall include specifications and requirements for testing and commissioning of all HVAC systems and equipment including air balancing, pressure testing and temperature controls. Complete testing shall be required of all systems. Government shall witness all testing, balancing and commissioning. The Contractor shall provide reports of all tests and commissioning results.

6.3 Equipment

6.3.1 Filtration

a. To reduce sand and dirt migration, outside air intakes shall be located as high as possible within architectural constraints. The intakes shall be sized so that free air velocities are below 2.54 MPS (500 FPM). All outside air intakes shall be through weatherproof louvers with a bird screen.

b. Medium efficiency (30 percent, as defined by ASHRAE 52 Dust Spot Efficiency Criteria) filters, the 50 mm (2 -inch) thick disposable panel type, shall be the second stage of filtration on all units requiring an inertial air separator, other wise they will be the first stage of filtration.

c. Wall and roof intakes and hoods shall have permanent washable metal mesh type filters for filtration of dust.

6.3.2 Heating

a. Heating shall be provided for facility to maintain the required winter indoor design temperature. The heating system shall consist of electric resistant heating coils located within the ductwork or within the air handling unit. The electric heating coils inside the standard air handling units shall be of open resistant type designed for direct exposure to the air stream. Duct mounted heaters shall be finned tubular (enclosed element) type. Electric heating coils shall be completely prepackaged and provided with the required temperature and safety controls.

b. Heating in small office areas shall be provided with ductless mini split units. If air-conditioning heat pumps are used for heating, these may require supplementary electric heating because of low winter ambient at this site. Supplementary heating may be provided either with auxiliary electric resistant heating coils or with baseboard type electric resistant convector heaters.

6.3.3 Ventilation

a. Outside fresh air shall be introduced into the building air handling systems. This air will be of sufficient quantities to maintain ventilation standards for occupants, make up air for exhaust systems, and provide and maintain a positive building and space pressure with respect to outdoors.

b. Toilet areas, shower rooms, janitor closets, and some storage rooms shall be provided with exhaust ventilation systems. The system shall generally consist of exhaust grill or register, ductwork, and wall or roof mounted centrifugal exhaust fan. The ventilation system shall be controlled by: time clock, individual switch, or wired in conjunction with buildings air handling system. Exhaust air shall be drawn in from adjacent spaces into each respective ventilated area through a door undercut when the transfer quantity is 50 CFM or less. For larger air quantities door louvers shall be used or the space may be supplied ducted air.

c. Mechanical exhaust ventilation systems where required shall be sized to maintain a space temperature of 5.6 degree C (10 degrees F) above outdoor ambient. The system shall be comprised of a centrifugal exhaust fan either roof or wall mounted, a motorized damper and wall intake louver set, filters, and thermostatic interlock controls.

e. Special maintenance or process functions that produces noxious fumes or vapors shall be provided with the mechanical exhaust system required to handle the process or pollutant. The system shall include: centrifugal exhaust fan, rigid and/or flexible ductwork, hoods, and necessary controls. Engine generator exhaust shall be piped and vented through exhaust muffler. Make-up air shall be filtered and provided using intake louvers or hoods with filters or a dedicated supply system. For small exhaust systems, make-up air may be pulled in from adjacent rooms or areas.

6.3.4 Air Conditioning

a. Air conditioning for smaller administrative and housing and support facilities shall be accomplished with the use of ductless mini split air conditioners/heat pump as a general rule. These units require little maintenance, provide individual control, and are easy to replace. If these are not equipped with outside air, fresh air ventilation requirements in each area must be satisfied from other air-conditioning system within the facility.

b. Split system air conditioners shall consist of two complete packaged units consisting of a remote air cooled condensing unit and matched evaporator blower unit or an air handling unit as described hereinbefore. The condensing unit shall be as described hereinafter.

c. Temperature Controls. All central type air handling systems shall include seven-day programmable clock controls to allow for night setback and daily/weekend operational control settings for energy conservation.

6.3.5 Refrigeration System

a. Direct Expansion (DX) air cooled condensing unit shall be located outdoors and mounted on slab-on-grade or roof or wall supported platform. Each unit shall consist of weatherproof casing, compressor(s), condenser coil, condenser fans, motor, and appurtenances. Compressor shall be of the hermetic or semi-hermetic reciprocating type. Refrigeration circuit shall be connected to the refrigeration circuit of the split system air conditioning unit enclosed within the unit housing consisting of coils, fans and electric motor drives.

b. Refrigerant: All refrigerants used shall conform to the “Montreal Protocol on Substances That Delete the Ozone Layer” September 1987, sponsored by the United Nations Environmental Programme and shall have Ozone Depletion Allowance (ODA) if 0.05 or less.

6.3.6 Diffusers, registers and grilles shall be factory fabricated of steel or aluminum and distribute the specified air quantity evenly over the space intended. The devices shall be round, half round, square, rectangular, linear, or with perforated face as determined by the

design. Units will be mounted in ceilings, high sidewalls, or directly to ductwork and shall be sized for the airflow to be delivered with a maximum NC rating of 35. Pressure loss through the diffuser shall be considered in sizing the duct system and the system static pressure calculations.

6.3.7 Branch Take-offs

Air extractors or 45° entry corners shall be provided at all branch duct take-offs. Manual volume control dampers shall be included at the branch duct take-offs as shown and where required to facilitate air balancing.

6.3.8 Duct & Piping Insulation.

All intake and supply ductwork, return and exhaust ductwork as required, chilled water equipment, piping, and accessories in air-conditioned facilities, shall be provided insulation and vapor barrier for thermal efficiency, to prevent condensation, and for energy conservation. Insulation exposed to weather or physical damage shall be protected with aluminum jacketing.

6.3.9 Wall Penetrations

Building wall penetrations shall be carefully made so as not to deteriorate the structural integrity of the wall system. Do not run conduit thru bond beams.

6.3.10 Fire and Smoke Dampers

Dampers shall be provided for protection of openings in walls, partitions or floors in accordance with NFPA 90A.

6.3.11 Control Wiring and Protection Devices

Control wiring and protection devices shall be the manufacturer’s standard, pre-wired, and installed at the factory. Operation of the control system shall be manufacturer’s standard configured for 220V/50Hz or 24V operation.

6.3.12 Thermostats

All thermostats shall be located near the return grills and mounted 1.5 meters above the floor and shall be easily accessible. In lieu of a thermostat, a temperature sensor may be located in the room location and connected to the control thermostat near the unit. Thermostats located inside occupied areas shall be provided with lockable covers.

6.3.13 Electric Motors

a. Motors shall be of sufficient size without operating in the service factor for the duty to be performed and will not exceed their full rated load when the driven equipment is operating at specified capacity under the most severe conditions likely to be encountered.

b. All motors exposed to 40.5°C temperature or greater shall be of the totally enclosed fan cooled (TEFC) type continuous duty classifications based upon 50°C ambient temperature of reference.

6.4 HVAC Systems

Requirements in various facilities shall be determined by the designer in coordination with site utility systems designers.

6.5 TESTING AND COMMISSIONING

6.5.1 General

After completing the work, but prior to building acceptance, the Contractor shall demonstrate that the ventilation systems are adjusted and operate correctly to fully satisfy the function for which these systems have been designed. The Contractor shall test, adjust, balance and regulate the system and its controls as necessary until the required designed conditions are met. The Contractor shall include tests for interlocks, safety cutouts and other protective devices to demonstrate safe operation. A description of all equipment or systems to be tested and balanced including the test procedures must be submitted prior to the scheduled testing that will be witnessed by the government. All such tests shall be carried out in the presence of the Contracting Officer or representative and full written records of the test data and final settings shall be submitted to the Contracting Officer.

6.5.2 The following tests data shall be submitted in a tabulated form:

a. Date and time of the test.
b. Outdoor DB and WB temperature.
c. Indoor Room Conditions: DB and WB temperatures and supply return and exhaust airflow.
d. Air Handling Equipment: Air quantities shall be measured by anemometer.

6.5.3 Following readings shall be recorded:

a. Supply, return and outside air CMH (CFM) supplied by each air handling system.
b. Total CMH (CFM) exhausted by each fan.
c. Motor speed, fan speed.(4)Input amperes and power input (KW) for each fan.

7. PLUMBING

7.1 SCOPE OF WORK.

7.1.1 General

The Contractor shall design and build domestic cold and hot water systems, waste, drain and vent systems, and fuel-oil storage and distribution systems (for emergency generators) required in the facilities identified hereinbefore in the Civil and Architectural

paragraphs hereinbefore. The contractor shall be responsible for complete design and construction of all domestic and special plumbing systems required for full and safe operations in Water, Wastewater Treatment, and other facility or structures required as part of the site utilities design in this contract.

There are many facilities at the site that do not have domestic water requirements but are provided with a packaged Heat-Cool Unit located outside the facility. These units are designed for evaporative cooling and require potable water for cooling operation in summer. The contractor utilities designer shall include these water service requirements in its design and provide water connection to Heat-Cool Units as and where required. The service connection shall be designed to prevent freezing of water and allow complete draining of lines in the winter.

The work covered in this scope also includes the delivery to site, erection, setting to work, adjusting, testing and balancing and handing over in full operating condition all of the plumbing equipment and associated plumbing works.

7.1.2 Standard Products

All materials and equipment shall be standard product of a manufacturer regularly engaged in the manufacture of the product and shall comply with specification and performance requirements described in various mechanical construction specifications sections included in this contract

7.1.3 Local Standards

Conflicts between criteria and local standards shall be brought to the attention of the Contracting Officer for resolution. In such instances, the Contractor shall furnish all available information with justification to the Contracting Officer.

7.1.4 Seismic Requirements

All mechanical and plumbing equipment and piping shall be installed to meet the seismic requirements as defined by the international Building Code, IBC 2000 and seismic response coefficients as identified in Paragraph 4 “Structural.”

7.2 CODES, STANDARDS AND REGULATIONS

The design and installation of equipment, materials and works covered under the plumbing services shall conform to the following standards, codes and regulations where applicable except where otherwise indicated under particular clause. The publications to be taken into consideration shall be those of the most recent editions. Standards other than those mentioned herein may be accepted provided that the standards chosen are internationally recognized and meet the minimum requirements of the specified standards. The Contractor shall submit proof of equivalency if requested by the Contracting Officer.

IPC - International Plumbing Code
NFPA - National Fire Protection Association
ASHRAE - American Society of Heating, Refrigeration and Air-Conditioning Engineers
ASME - American Society of Mechanical Engineers
ASTM - American Society for Testing and Materials
AWS - American Welding Society

7.3 Plumbing Systems Requirements

a. Cold water shall be provided to the facility to serve the water usage and plumbing fixtures provided for the facility. Water service to each facility shall enter the building in a mechanical, toilet, storage, or similar type space. All water piping shall be routed parallel to the building lines and concealed in all finished areas. Insulation shall be provided where required to control sweating of pipes. Cold water piping shall be insulated using cellular glass or flexible elastomeric cellular insulation.

b. Plumbing Fixtures: Plumbing fixtures requirements shall be determined by the designer. Selected fixtures shall conform to specifications and requirements in Specification 15400 Plumbing , General Purpose and shall also comply with the following guidance:

   (1)All toilets shall be eastern style with a wall-mounted faucet and spray hose and shall be laid facing North/South away from Mecca, for cultural reasons.
   (2)Do not provide urinals for cultural reasons.

c. Floor drains shall be provided in each room that contains a water source. Floor drains shall be provided in the mechanical equipment and toilet rooms as required. Drains shall be located near urinals or toilet partitions in toilet rooms. In mechanical rooms, floor drains shall be provided to avoid running drain piping long distances above or over the floor. Provide all floor drains with deep-seal traps; Include provision of primer traps when required to prevent drying out of traps.

d. Hot water shall be provided for the facility to supply 140 degrees F (60 degree C) hot water to fixtures and outlets requiring hot water. Hot water of a higher temperature shall be provided where required for special use or process. The hot water shall be generated using electric type water heater(s). The unit shall be located in a mechanical room, storage room, toilet/janitor room or similar type space. The unit shall be of the commercially available tank type having low or medium watt density electric heating elements. Hot water piping shall be routed parallel to the building lines and concealed within finished rooms. All hot water piping shall be insulated.

7.4 Corrosion

Pipe subject to corrosion passing through or under corrosive fill such as cinders, concrete, or other corrosive material, shall be protected against external corrosion by protective coating, wrapping, or other means which will resist such corrosion. Piping made of inherently noncorrosive material will be used to the greatest extent

possible. Dielectric unions shall be used where dissimilar metals are used in the same piping system.

7.5 Testing and Inspection.

Testing of each piping system shall be as per International Plumbing Codes. The contractor's designer shall specify that all new, altered, extended, or replaced plumbing systems shall be left uncovered and unconcealed until it has been tested and approved. The installation contractor shall furnish all equipment, materials, and labor required for testing a plumbing system. All such tests shall be carried out in the presence of the Contracting Officer and full written records of the test data and final settings shall be submitted to the Contracting Officer.

The final test shall include a smoke test for drainage and vent system and pressure test for the domestic water piping. After completing the work, the Contractor shall demonstrate that all plumbing systems operate to fully satisfy the function for which these systems have been designed. The Contractor shall test, adjust, balance and regulate the system and its controls as necessary until the required designed conditions are met. The Contractor shall include tests for interlocks, safety cutouts and other protective devices to demonstrate safe operation. After all tests are complete, the entire domestic hot and cold water distribution system shall be disinfected. The system shall not be accepted until satisfactory bacteriological results have been obtained.

8. NOT USED

9. ELECTRICAL

9.1 SCOPE OF WORK

9.1.1 General. Contractor shall design and construct Exterior manhole ductbank Primary and Secondary Power Distribution System, to include pad mounted transformer sub-stations and all building/facility service entrance cables from transformer sub-stations.. The Contractor shall design and construct any other required systems described in section 01015 not provided as part of the design drawings and specifications to ensure a complete and usable facilities, to include electrical systems required for scope of work described under the Civil section of 01015. The contractor shall construct in accordance with the contract design drawings, specifications, and section 01015: (a) Interior Secondary Distribution System (b) Lighting and power branch circuitry, (c) Premise telephone and network/data wiring and (d) Interior Fire Detection and Alarm System. The site power distribution system shall be designed for the ultimate demand loads plus 20% spare capacity.

9.1.2 Temporary Electrical Service: Contractor shall be responsible for providing necessary temporary electrical service to all facilities which may be built/occupied prior to the completion of the Power Plant. Temporary service to each facility shall meet all required electrical demands of that facility plus 20% for spare capacity and shall be operational until such time the Base Power Plant and the exterior power distribution system is in place and becomes operational.

9.1.3 All equipment shall be tested, commissioned, and operational at time of turn-over to the government. Contractor shall provide all necessary operating instructions, commissioning reports, spare parts, and related items at time of turn-over.

9.2 DESIGN AND CONSTRUCTION CRITERIA

9.2.1 Applicable Standards

ANSI/IEEE C57.12.22-1993 (R1998) - American National Standard for Transformers— Pad-Mounted, Compartmental-Type, Self- Cooled Three-Phase Distribution Transformers With High-Voltage Bushings, 2500 kVA and Smaller: High Voltage, 34 500 Grd Y/19 920 Volts and Below; Low Voltage, 480 Volts and Below

ANSI/IEEE Std 81-1983

ANSI/NETA ETT-2000

ANSI/NETA MTS 7.2.2-2001

ANSI/TIA/EIA-568 Commercial Building Telecommunications Cabling Standard

ANSI/TIA/EIA-569 Commercial Building Standard for Telecommunication Pathways and Spaces

ANSI/TIA/EIA-942 Telecommunications Infrastructure Standard for Data Centers

EIA ANSI/TIA/EIA-607: (1994) Commercial Building Grounding/Bonding Requirement Standard.

EIA ANSI/TIA/EIA-607: (1994) Commercial Building Grounding/Bonding Requirement Standard.

EIA ANSI/TIA/EIA-607 Commercial Building Grounding/Bonding Requirement Standard.

ETL 1110-3-412 Transformer Application Guide

ETL 1110-3-502, Telephone and Network Distribution System Design and Implementation Guide.

Factory Mutual (FM) Approval Guide-Fire Protection (2002).

IBC - International Building Code

IMC – International Mechanical Code

IPC – International Plumbing Code

IEEE C2 National Electrical Safety Code (NESC)

IEEE C57.12.28 - IEEE Standard for Pad-Mounted Equipment—Enclosure Integrity

IEEE C57.12.34-2004 - Errata to IEEE Standard Requirements for Pad-Mounted, Compartmental-Type, Self-Cooled, Three-phase Distribution Transformers (2500 kVA and Smaller)- High-Voltage: 34 500 GrdY/19 920 Volts and Below; Low Voltage: 480 Volts and Below

IEEE C57.12.80-2002 - IEEE Standard Terminology for Power and Distribution Transformers

IEEE 48 IEEE Standard Test Procedures and Requirements for Alternating-Current Cable Terminations 2.5 kV Through 765 Kv

IEEE Std 62™-1995 (R2005)

IEEE Std 81-1983

IEEE Std 81.2-1991

IEEE standard 400-1991

IEEE standard 519-1992

IEEE standard 602-1996 , Recommended Practices for Electric Systems in Health Care Facilities

IEEE standard 1100, Powering and Grounding Electronic Equipment (aka Emerald Book)

IESNA Lighting Handbook

International Electrical Testing Association Inc. (NETA) Acceptance Testing Specifications for Electrical Power Distribution Equipment and Systems

MIL-HDBK-1003/11 Diesel-Electric Generating Plants

MIL-HDBK-1004/21 Power Distribution Systems

MIL-HDBK-1012/3

NFPA 10, Portable Fire Extinguishers

NFPA 70, National Electrical Code

NFPA 72, National Fire Alarm Code, 2002 edition

NFPA 99, Health Care Facilities

NFPA 101, Life Safety Code, 2003 edition

NFPA 110, Emergency and Stand-by Power Systems, 2005

NFPA 780, Lightning Protection

TI 800-01 Design Criteria

TM 5-684 Facilities Engineering - Electrical Exterior Facilities

TM 5-688 Foreign Voltages and Frequencies Guide

TM 5-803-14 Site Planning and Design

TM 5-811-1 Design: Electrical Power Supply and Distribution

TM 5-811-3 Electrical Design: Lightning and Static Electricity Protection

UFC 1-200-01, Design: General Building Requirements, 31 July 2002

UFC 1-300-09N, Design Procedures, 25 May 2005

UFC 3-501-03N Electrical Engineering Preliminary Considerations

UFC 3-520-01 Interior Electrical Systems, 10 June 2002

UFC 3-530-01AN Design: Interior and Exterior Lighting and Controls 19 Aug 2005

UFC 3-540-04N Design: Diesel Electric Generating Plants 16 Jan 2004

UFC 3-550-03FA Electrical Power Supply and Distribution

UFC 3-550-03N Power Distribution Systems

UFC 3-560-10N, O&M: Safety of Electrical Transmission and Distribution Systems

UFC 3-600-01: Fire Protection Engineering for Facilities

UFC 4-010-01, Design: Minimum DoD Antiterrorism Standards for Buildings, 8 Oct 2003

UFC 4-010-02, DoD Minimum Antiterrorism Standoff Distances for Buildings, 8 Oct 2003

UFC 4-510-01, Design Medical Military Facilities

Underwriters' Laboratories (UL) Fire Protection Equipment Directory (2002).

USCINCCENT OPORD 97-1

UL 467 Grounding and Bonding Equipment

MIL-HDBK-1004/21 Power Distribution Systems

9.2.2 Design shall be in metric units.

9.3 MATERIAL

9.3.1 General

Unless noted otherwise, all material used shall be in compliance with the requirements of UL standards. In the event that UL compliant

materials are not available, Contractor may then select applicable British Standards (BS), IEC, CE, CSA, GS, or DIN listed material, but the contractor must prove equivalence and must provide the government with a full copy of the relevant specification(s). Material and equipment installed under this contract shall be for the appropriate application and installed in accordance with manufacturers recommendations.

Equipment enclosure types shall be in compliance with the National Electrical Manufacturer's Association (NEMA) or the International Electro-Technical Committee (IEC) standards.

Material and equipment installed under this contract shall be for the appropriate application. Materials and equipment shall be installed in accordance with recommendations of the manufacturer. Major components of equipment shall have the manufacturer's name, address, type or style, voltage and current rating, and catalog number on a non-corrosive and non-heat sensitive plate, securely attached to the equipment. All equipment delivered and placed in storage, prior to installation, shall be protected from the weather, humidity and temperature variation, dirt and dust, and any other contaminants. All equipment shall be in new condition, undamaged and unused.

9.3.2 Standard Product: All material and equipment shall be a standard product of a manufacturer regularly engaged in the manufacture of the product and shall essentially duplicate items that have been in satisfactory use for at least two (2) years prior to bid opening.

9.3.3 Design Conditions: All equipment shall be rated and designed for 50 Degree Centigrade and elevation of 2,000 meters above sea level.

All medium voltage installations shall comply with the requirements of the National Electrical Safety Code (NESC, aka IEEE C2) and the National Electrical Code (NEC, aka NFPA 70), as well as appropriate UFCs and IEEE standards listed above.

9.3.4 Restrictions: Aluminum conductors shall only be used for overhead lines. Aluminum windings shall **NOT** be used in transformers.

Any references to 120/208/220/277/480 volt, 60Hz systems in any code or standard shall be interpreted as 220/380 volt, 50Hz systems, unless otherwise modified or directed in this RFP. References in the National Electrical Code to 120 or 125 volt receptacles shall be taken to mean 220v receptacles.

9.4 DESIGN REQUIREMENTS

9.4.1 Site Primary & Secondary Power Distribution System

Primary (15kV ‘Delta’) and secondary power distribution (380/220V ‘Wye’) shall be underground. Design and installation of primary and secondary power distribution systems shall be complete and in compliance with the requirements of the National Electrical Safety Code (ANSI/IEEE C2), UFC 3-550-03FA (also called Army TM 5-811-1), National Electrical Code (NFPA 70), and other electrical references listed in this RFP. Site-wide primary power distribution system shall be designed (laid-out) to be serviced by a minimum of three (3) high

voltage feeders. All feeders shall be provided with feeder-to-feeder tie capabilities to transfer loads between feeders. Feeder tie points shall be located in the field and away from the Power Plant. Primary power distribution shall be complete, to include but not be limited to, fused cut-outs, arresters, terminals, cable guards, circuit breakers, transformers, and related items. All primary feeder taps shall be protected with fused cutouts. Long feeder runs shall be provided with sectionalizing devices, such as, in-line fuses, sectionalizer or reclouser, as necessary. Minimum of 3 fuses, with appropriate rating, shall be provided as spares at each fused cut-out location.

Primary Distribution shall be installed in accordance with the NESC, UFC 3-550-03FA, and other applicable standards listed in this RFP.

9.4.1.1 Raceways

Exterior raceways (conduits) shall be installed at a slope towards a manhole or hand-hole to avoid collection of water in the raceway. Conduit shall be PVC, thin-wall for concrete encasement and hard-wall (Schedule 40) for direct burial. Direct buried conduit shall only be installed for street lighting circuits. Direct buried conduits shall be encased in concrete, when under paved areas or under road crossings. High voltage cables shall be installed in conduit no less than 100mm (4 inch) in diameter. Secondary cable shall be installed in conduit no less than 50mm (2 inch). Direct buried conduit shall be installed 800mm (32 inch) below grade.

All underground conduits shall use long-sweeping elbows. All communications conduits shall use long-sweeping elbows.

9.4.2. Existing Services / Building Loads

Contractor shall connect all existing active electric services to facilities in the Base, to the new power distribution system provided under this contract. Connection of existing services to the new system shall be via appropriately sized pad-mount transformer(s) and coordinated with the Contracting Officer.

9.4.3 Provide telephone lines to the Corps, Brigade, and Battalion Headquarters Buildings.

9.4.4 Transformer Substations: Transformer substations shall be strategically located close to the loads. Dedicated transformer substations shall be provided for large loads. Transformers shall be Primary ‘Delta’ and Secondary ‘Wye’ connected. Primary side load-break disconnecting means shall be provided with all transformers. All transformers shall be sized for known projected demand loads, plus (+) 20% spare capacity for future growth. Transformer substations shall be dead-front, loop-feed, pad-mounted, compartmental, self-cooled type. Transformers shall come complete from manufacturer; use of third-party transformer housings or add-on transformer housings shall not be permitted. Transformers shall have no exposed live components.

Transformer selection, design, and installation shall be governed by NEC, NESC, ETL 1110-3-412, TM 5-684, UFC 4-510-01, UFC 3-550-03FA, UFC 3-550-03N, IEEE C57.12.28, ANSI/IEEE C57.12.22, IEEE C57.12.34, and C57.12.80.

Medical Clinic: Electrical system shall be designed as a double-ended substation, fed from two different feeder circuits, to two different transformers. Installation shall be per UFC 4-510-01 paragraphs 10.2.3 and 10.3 (including 10.3.1 thru 10.3.5) and figure 10-1. Power system for medical clinic shall be a "type 1 EES" as defined in NFPA 99. Size of transformers, generators, and power feeds shall be governed by UFC 4-510-01, NFPA 99, and the NEC. In case of conflict between transformer design criteria between the above named standards, UFC 4-510-01 shall govern; in cases where UFC 4-510-01 can not resolve the conflict, it shall be brought to the attention of the Contracting Officer for resolution.

9.4.5 Underground Conductors: All underground conductors shall meet the requirements of the codes and standards listed in this RFP, including but not limited to: NESC, NEC, UFC 3-550-03FA, and related.

9.4.6 Secondary Power Distribution System

Secondary Power shall be 380/220 volts, 3 phase, 4 wire, 50 Hz. Building secondary power distribution system shall include main distribution, lighting and power panels as required. All panel boards shall be circuit breaker 'bolt-on' type panels. In large buildings separate lighting and power panels shall be provided. The minimum size circuit breaker shall be rated at 20 amperes. Circuit breakers shall be connected to bus bar(s) within the panel boards. Daisy chain (breaker-to-breaker) connection(s) shall not be acceptable. Indoor distribution panels and load centers shall be flush mounted in finished areas. All circuit breakers shall be labeled with an identification number corresponding to the panel schedule. A 3-pole circuit breaker shall be a single unit and not made up of 3 single pole circuit breakers connected with a wire or bridged to make a 3-pole breaker. All wiring shall be copper, minimum # 12 AWG (4mm sq), recessed in finished areas and surface mounted in metal conduits in unfinished areas. All panels shall be provided with a minimum of 20% spare capacity for future load growth. Power receptacles (outlets) shall be duplex, 240 volts, 50 HZ, German (DIN) Standard. All splicing and terminations of wires shall be performed in a junction or device boxes. Proper wire nuts/connectors shall be used for splicing wire. No twist-wire connections with electrical tape wrapped around it shall be acceptable. All electrical installation shall be in accordance with the requirements of NFPA 70 (National Electric Code). Main Distribution Panel shall be provided with an ammeter, voltmeter and kilowatt-hour meter. Selector switch shall be provided for reading all 3 phases. All service entrance cables and equipment, such as main distribution panels etc., to the facilities shall be sized for the ultimate facility loads, to include any heating loads (infrared heating), initial and future provided by others.

9.4.6.1 Receptacles

General purpose receptacles shall be duplex, grounding (earthed) type, "flush" or "semi-flush" wall mounted type, color ivory and installed 500 mm above finished floor (AFF). In office or similar areas receptacles shall be provided at every 1.8 M intervals. In maintenance buildings 3-duplex receptacles shall be provided at each vehicle

maintenance bay. In storage buildings, receptacles shall be provided in 5 m intervals. In communications rooms, receptacles shall be provided at 1 m intervals or closer. CEE Type receptacles with plugs 2P+E (240v) or 3P+E (380v) and with appropriate rating, shall be provided for, but not be limited to, washers, dryers, kitchen equipment and any other type of large plug-able equipment. Receptacle shall be complete to include box, cover plate and necessary screws/connectors and of the type most commonly used in Afghanistan. Receptacles near sinks or lavatories shall be switch operated and Ground Fault Circuit Interrupter (GFCI), or Residual Current Disconnect (RCD) type, with the trip setting of 30 milliampere or less.

Sinks will have a receptacle above, with one dual receptacle serving two sinks that are side-by-side. Receptacles in wet/damp areas or within 1 meter (~3 feet) of sinks, lavatories, or wash-down areas shall be ground fault circuit interrupter (GFCI) type or Residual Current Disconnect (RCD) type, with the trip setting of 30 milliamperes or less.

Total number of duplex receptacles shall be limited to six (6) per 16- or 20-ampere circuit breaker.

Medical Clinic: Provide receptacles at patient beds per NEC 517.18 and 517.19. Provide and install electrical receptacles no more than three (3) meters apart on all other interior walls. All receptacles shall be Hospital Grade, per NEC requirements. Receptacles shall be complete to include box, cover plate and necessary screws/connectors and shall be type CEE 7/7. Provide no less than two separate 16A circuits per room, unless more are required per NEC, NFPA 99, and UFC 4-510-01.

9.4.6.2 Lighting

Light Fixtures: Lighting fixtures shall be a standard manufacturer’s product. Fluorescent light fixtures shall be power factor corrected and equipped with standard magnetic ballast(s). All light fixtures shall be capable of receiving standard lamps used locally. Light fixtures shall be mounted at 2.7M, minimum, AFF. Fixtures may be pendant or ceiling mounted, depending on the ceiling height. All fixtures shall be fully factory wired. Lighting levels shall be as follows:

General Office Space / Computer Rooms	40 FC (400 Lux)
Conference Rooms	30 FC (300 Lux)
Dinning Rooms	70 FC (700 Lux)
Laundry Rooms	30 FC (300 Lux)
Bed Rooms	30 FC (300 Lux)
Kitchen	70 FC (700 Lux)
Lobbies	15 FC (150 Lux)
Lounges	15 FC (150 Lux)
Mechanical & Electrical Equipment Rooms	20 FC (200 Lux)
Stairways	20 FC (200 Lux)
Toilets	20 FC (200 Lux)
Soccer Field with Bleachers & Running Track	30 FC (300 Lux)

Medical Clinic Lighting: Lighting in the medical clinic shall be per UFC 4-510-01 Appendix A. High frequency electronic ballasts shall NOT be used in the medical clinic.

9.4.6.2.1 High Ceilings

Contractor may provide high bay High Pressure Sodium (HPS) vapor light fixtures in facilities with high ceilings, provided that the replacement lamps for the fixtures are available locally.

9.4.6.2.2 Light Switch

Light switch shall be single pole. Minimum of one light switch shall be provided in every room. Lighting in large rooms/areas may be controlled from multiple switches. Lighting contactors may be used to operate lighting in open or large bay areas. Rooms with multiple entrances shall have multi-way switches.

9.4.6.3 Dedicated Service

Contractor shall provide and install a dedicated 3-phase service for X-Ray machine in X-Ray Room of the Clinic. Service shall include a 3-pole, 40 ampere circuit breaker at 440V, 50 Hz, with a safety disconnect switch provided in the X-Ray Room. Final location of disconnect switch shall be coordinated with the Contracting Officer. Wiring shall be installed in conduit.

9.5 CONDUCTORS

All cable and wire conductors shall be copper; except overhead medium voltage conductors may be aluminum. Conductor jacket or insulation shall be color coded to satisfy local utility requirements. Conductors shall be sized in accordance with the this RFP and the listed codes and standards.

For interior wiring, the use of 75 or 90 degree C (minimum) terminals and insulated conductors is required. Use of 75 degree C conductors on circuits with protective device terminals rated for 60 degree C is inappropriate.

9.6 GROUNDING AND BONDING

In general, grounding and bonding shall comply with the requirements of NFPA 70 and NFPA 780. Underground connections shall be exothermal welded. All exposed non-current carrying metallic parts of electrical equipment in the electrical system shall be grounded. Insulated grounding conductor (separate from the electrical system neutral conductor) shall be installed in all feeder and branch circuit raceways. Grounding conductor shall be green-colored, unless the local authority requires a different color-coded conductor. Ground rods shall be copper-clad steel. Ground resistance shall not exceed 25 ohms when measured more than 48 hours after rainfall using the fall of potential method outlined in IEEE 81.

Communications Building: Grounding and Bonding shall meet the requirements of ANSI/TIA/EIA-942, IEEE 81.2 and IEEE 1100, as well as the NEC. Ground resistance shall not exceed 5 ohms when measured more than 48 hours after rainfall using the fall of potential method outlined in IEEE 81. A ground ring shall be installed around the communications building.

Medical Clinic: Grounding and Bonding shall meet the requirements of ANSI/TIA/EIA-942, IEEE 81.2, IEEE 1100, NFPA 99, and UFC 4-510-01, as well as the NEC. Ground resistance shall not exceed 5 ohms when measured more than 48 hours after rainfall using the fall of potential method outlined in IEEE 81.

Power plant: Grounding and Bonding shall meet the requirements of ANSI/TIA/EIA-942, IEEE 81.2 and IEEE 1100, as well as the NEC. Ground resistance shall not exceed 5 ohms when measured more than 48 hours after rainfall using the fall of potential method outlined in IEEE 81. A ground ring shall be installed around the Power Plant.

9.6.1 Lightning Protection

Communications Building, Medical Clinic, Ammo Supply Point, Propane Tanks, Fuel Point and Power Plant including Fuel storage tanks shall have a lightning protection system installed per the NEC and NFPA 780, as well as other applicable standards listed in this document. Medical clinic lightning protection requirements shall also meet the requirements in UFC 4-510-01.

Ammo Supply Point and all fueling areas shall also implement static electricity controls in accordance with standards listed in this document.

9.7 ENCLOSURES

Enclosures for exterior applications shall be NEMA Type 4X (IEC Classification IP56) or better and for dry interior locations NEMA Type 1 (IEC Classification IP10) or better. For wet indoor locations, NEMA type 3S (IEC Classification IP54) or better shall be used.

9.8 FIRE DETECTION & ALARM SYSTEM

Per directions from the Host Nation, no Fire Detection and Alarm System shall be provided in the facilities to be used by the Host Nation’s personnel. However, Fire Alarm System shall be provided, as described below, in the facilities to be used by the U.S. Personnel. In U.S. Barracks Fire Detection and Alarm System shall consist of hard-wired, multi-station smoke detectors, with building wide annunciation. In the U.S. Headquarters Building complete Fire Detection and Alarm System shall be provided, to include, fire alarm control panel, pull (or push button) stations, horns, strobe lights, smoke and/or heat detectors, as required. No Fire Alarm System shall be provided in the Dining/MWR Facility. Fire alarm cable shall be installed in recessed hard wall PVC conduit and plastered over it. In addition to building wide fire alarm annunciation, the system shall also be capable of automatically transmitting the alarm signal via telephone lines to the local Base Fire Department / Fire Station. System design shall be in accordance with the requirements of NFPA 72. Fire alarm system shall be complete and a standard product of one manufacturer. Contractor shall provide hard-wired carbon monoxide (CO_2) detectors, with local in-room annunciation, in all rooms where wood burning or oil-fired heaters will be provided.

9.9 TELEPHONE/COMPUTER NETWORK SYSTEM

Each Corps, Brigade, and Battalion HQ building office, room shall have telephone and computer data outlets. Telephone/data System shall include cross-connect boxes, duplex RJ-45 telephone outlets with a minimum of 4 pair Category 5 Enhanced (CAT 5e) cable terminating at each outlet (jack). The Contracting Officer shall determine outlet locations for individual rooms. Telephone wiring shall be recessed in finished areas and surface mounted in metal conduits in unfinished areas. Two (2) appropriately sized empty conduits (not less than 100 mm) shall be provided from the cross connect box to an outside communication hand-hole 1.5 meter from exterior walls. All empty conduits shall have pull wires and shall be capped and sealed. See Paragraph 10 below for additional requirements for communications systems.

9.10 TELEVISION SYSTEM

Television System shall consist of television outlets and an empty metal conduit raceway system, to include necessary junction boxes and pull wire. The Contracting Officer shall determine outlet locations. Television monitors, coaxial cable any amplification devices shall be provided by others. One 2-inch (50mm) conduit shall be provided from the television junction box to the outside communication hand-hole.

9.11 IDENTIFICATION NAMEPLATES

Major items of electrical equipment, such as the transformers, manholes, hand holes, panel boards and load centers, shall be provided with a permanently installed engraved identification nameplate.

9.12 SCHEDULES

All panel boards and load centers shall be provided with a panel schedule. Schedule shall be typed written in English and Afghan languages.

9.13 SINGLE LINE DIAGRAM

Complete single line diagram shall be provided in every transformer distribution panel and in Main Distribution Panel in each building. Single line diagram shall show all panels serviced from the transformer distribution panel and the MDP respectively.

9.14 MEDICAL CLINIC

All electrical work in the medical clinic shall comply with the health-care-facility specific requirements outlined in UFC 4-510-01 and NFPA 99, in addition to the general requirements of the NEC and other general electrical codes and standards listed above.

The medical clinic shall be provided with an overhead paging system (Public Address System), as outlined in UFC 4-510-01.

Backup power systems shall be installed per the requirements of UFC 4-510-01, NFPA 99, and NEC. Power systems for the medical clinic shall

be designed as a double-ended substation with two or more transformers, fed from two different feeders. Hospital power system shall be a "type 1 EES" system, as defined in NFPA 99, and shall meet the design criteria defined in UFC 4-510-01, chapter 10.

UPS systems for the medical clinic shall be provided as required in UFC 4-510-01.

The terms "double ended" and "double ended substation" are defined in IEEE 602.

Provide power for X-ray equipment in accordance with UFC 4-510-01.

In case of conflict between transformer design criteria between the above named standards, UFC 4-510-01 shall govern; in cases where UFC 4-510-01 can not resolve the conflict, it shall be brought to the attention of the Contracting Officer for resolution.

9.15 Electrically Operated Equipment

Contractor shall design, provide and install circuits for all water treatment, waste water treatment plant equipment, lab equipment, Pumps, HVAC equipment, electric water heater, exhaust fans, and any other equipment requiring power in all infrastructure support facilities as identified in Civil and Architectural section of and make final connections.

10. COMMUNICATIONS SYSTEM

10.1 General

10.1.1. Applicable Specifications

The Publications listed below form a part of this specification to the extent referenced. The publications are referred to in the text by designation only.

United States Department of Agriculture, Rural Utilities Service

RUS Bulletin 1751F-643	(2002) Underground Plant Design
RUS Bulletin 1751F-644	(2002) Underground Plant Construction
RUS Bulletin 1753F-151	(2001) Construction of Underground Plant, Parts II & III
RUS Bulletin 1753F-201	(1997) Acceptance Test and Measurements Of Telecommunications Plant
RUS Bulletin 1753F-208	(1993) Specifications for Filled Telephone Cables with Expanded Insulation (PE-89)
RUS Bulletin 1753F-401	(1995) Standards for Splicing Copper And Fiber Optic Cable (PC-2)
RUS Bulletin 1753F-601	(1994) Specifications for Filled

	Fiber Optic Cables (PE-90)
RUS Bulletin 1753E-001	(1996) RUS General Specification for Digital, Stored Program Controlled, Central Office Equipment, RUS Form 522.
RUS Publication IP 344-2	(2006) List of Materials Acceptable For Use on Telecommunications Systems Of RUS Borrowers.
RUS Bulletin 345-65	(1978) Shield Bonding Connectors (PE-33)
RUS Bulletin 345-83	(1982) REA Specification for Gas Tube Surge Arrestors (PE-80)

American National Standards Institute/Telecommunications Industry Association/Electronics Industry Association

ANSI TIA/EIA 606-A	(2002) Administration Standard for The Telecommunications Infrastructure
ANSI TIA/EIA 607-A	(2002) Commercial Building Grounding (Earthing) and Bonding Requirements for Telecommunications

10.1.2 Communication Systems Design

The outside plant communications system for Paktika is to be designed, supplied and constructed by the Contractor. The design and construction of the systems shall be in accordance with the references and the requirements contained herein. The design and selection of materials and equipment shall be submitted to TAC through the Contracting Officer for approval. The inside plant (building communications cabling) shall use the existing design provided by the Government.

10.2 Exterior Communication Manhole System

The contractor shall install a manhole/handhole and duct system. The manholes and hand-holes shall be constructed in accordance with the contract drawings. The maximum distance between manholes and/or hand-holes shall be 150 m. The ducts shall be direct buried with a minimum of 1000 mm of properly tamped dirt/backfill on the top. Hand-holes shall be installed in laterals in between manholes and buildings and only where the distance between the main duct system and the building is 100 meters or more. The maximum number of ducts in a hand-hole wall shall be two, with one having four (4) inner ducts installed.

10.3 Exterior Conduit

The underground conduit for the manhole and duct system shall be direct buried (1 meter below surface), 114 mm DB type PVC or schedule 40, PVC. Innerducts shall be four(4) 25mm PVC or PE innerducts field installed in the outer-duct. The inner ducts shall be installed in the duct face and secured with properly sized duct plugs which expand to seal the

duct. The ducts will be reinforced concrete encased where a road or taxi way is crossed. The duct will be listed on the RUS list of materials acceptable for use on RUS projects. Cable racking diagrams (manhole/hand-hole butterflies) shall be provided for the manholes and hand-holes. The minimum duct configuration in the main duct system shall be a six way duct, being three conduits wide by two conduits deep (3 X 2) with two of the conduits having inner-ducts installed. Laterals off of the main duct system manhole to manhole shall be a minimum of a 4 way (2x2) with one duct having innerducts. The duct system from the manhole/handhole to a building with cable installed shall be a 1x 2, 110 mm PVC duct bank with one duct having innerducts. The duct system from a manhole/handhole to a building with allocations only shall be two (2), four inch (114mm) DB type PVC conduits stubbed out 3 meters from the manhole/handhole.

10.4 Exterior Telephone Cable

The Contractor shall install copper and fiber optic cable in accordance with the references and the cable requirements listed below. The copper cable shall be 24 AWG, RUS PE89 type, foam skin polyolefin, with an outer layer of solid colored polyolefin and a copolymer coated 8 mil aluminum tape shield. The fiber optic cable shall be a single mode, RUS PE90 type, with a 6 mil, copolymer coated steel shield. The fiber shall not have any internal splices and have a maximum loss of .4dB/Km at 1310nm and .3dB/Km at 1550nm. The copper and fiber optic cable shall be installed, grounded/bonded, spliced and tested in accordance with RUS standards.

10.5 Splices

10.5.1 Copper splices. 25 pair modules shall be used on copper splices 25 pairs or greater and discrete connectors shall be used on lesser count cable splices. The copper splice closures shall be flash tested with nitrogen in accordance with the manufacturer’s recommendations before encapsulation. The encapsulant shall fill all of the splice interstices. The copper splicing connectors, bonding hardware, splice closures and encapsulant shall be on the RUS list of material acceptable for use on RUS projects, IP 344-2. Bonding and grounding shall be in accordance with the RUS standards. The copper splice closure shall be installed by the copper splicer only. The copper cable splicer (s) shall have 7 years documented unsupervised experience in the installation of the splice closure being used.

10.5.2 Fiber Optic splices. The fiber optic splice closure shall be equipped with splice trays that properly hold the fusion splice protectors (stainless steel rod with heat shrink tube). The splice loss shall be .02dB or less as measured by the fusion splicing machine and .2dB as measured by an OTDR. The fiber optic splice closure shall be flash tested with nitrogen in accordance with the manufacturer’s recommendations and also be listed in RUS IP 344-2. All bonding hardware shall also be listed in RUS IP 344-2. Bonding and grounding shall be in accordance with the RUS standards. The fiber optic splice closure shall be installed by the fiber optic splicer only. The fiber optic cable splicer (s) shall have 7 years documented unsupervised experience in the installation of the splice closure being used.

10.6 Protector blocks on the Main Distribution Frame (MDF).
The contractor shall install 100 pair copper protector units with cable stubs on the MDF. The protectors shall be equipped with heavy duty gas tube protector units and both the connectors and gas tubes shall be on the RUS list IP 344-2. The Switch side of the protector units shall be equipped for wire wrap terminations. The protector stubs (TIP Cables) shall be spliced to the incoming outside plant cables. The tip cable splice closures shall be mounted on formed metal channel (Kindorf,Unistrut,BeeLine etc.) frame work in the cable vault on galvanized cable racks (the same as installed in the manholes and hand-holes) and cable rack hooks. The distance between the cable racks shall be no more than 30 inches, meaning that the vertical members on the formed metal channel structure will be no more than 30 inches apart. Rust Resistant hardware (galvanized) shall be used on the formed metal channel framework. The copper splice closures shall be flame retardant and listed on RUS Bulletin 344-2. Bonding and grounding of the MDF and the cable vault shall be in accordance with the referenced RUS standards. Each incoming cable pair will be protected on the MDF.

10.7 Fiber optic patch panels. The fiber optic patch panels used for the Fiber MDF shall be relay rack mounted combination units that provide for patching and splicing. The combination unit shall have fusion splice trays and be equipped to use pre-connectorized panels. Each panel shall be equipped with six duplex SC connectors with zirconia ceramic sleeves per panel. The combination unit enclosure shall be able to properly store one meter of de-sheathed fiber optic cable. The combination units shall be mounted on the relay racks at the end of the copper main distribution frame. The fiber optic terminations shall consist of the outside plant cable being fusion spliced to single mode pigtails with factory installed SC connectors. The fusion splice shall have a splice loss of .02dB or better as measured by the splicing machine and .2dB as measured by an OTDR. The pigtails shall have a single mode insertion loss of less than .35dB with the typical being 15dB and a single mode return loss of better than -55dB. The fusion splices shall be protected by a stainless steel rod and heat shrink tube and placed in a splice tray. The combination unit enclosure shall be capable of mounting 15 panels. Blank adapter plates shall be used fill up all unused spaces on the combination unit. One duplex, single mode patch cord SC-SC shall be provided for each patch panel port. The fiber patch cords shall have a mated pair insertion loss of less than .35dB with a typical loss of .15dB and a typical mated return loss of less than -55dB.

10.8 Outside plant cable. The outside plant cable (cable size and cable counts) shall be engineered and installed in accordance with the referenced standards. The OSP cable engineering shall be approved at TAC before any cable is ordered.

10.8.1 Spare cable pairs and fiber optic strands. There shall be spare cable pairs and fiber strands in the manholes/hand holes as required ensuring that standard sized cables are used. Dead Cable pairs shall be spliced through and cleared and capped in proper connectors. The 25 pair binder grouping of the cable shall be maintained. When the smaller (6 pair or 12 pair) counts are used, the first 6 pair count or first two 6 pair counts are used, the 13th pair of the count is cleared and capped, and then the second pair counts 14th through 25 pair count

will be used. Under no circumstances will a split binder count be used. The 6 strand grouping of the fiber optic cable plant shall also be maintained.

10.9 The following buildings will either have the cables installed and terminated in the building OR have the cable allocated in the cable count and left in the manhole/handhole cable splice closures.

10.9.1 DPW building, 50 pairs copper, 6 strands single mode fiber optic cable. Copper and fiber shall be installed in the building, terminated and tested.

10.9.2 Detention Facility, 25 pairs copper, 12 strands single mode fiber optic cable.

10.10 Embedded Training Facility

10.10.1 Embedded Training, MWR building, 50 pairs copper, 12 strands single mode fiber optic cable. Copper and fiber shall be installed in the building, terminated and tested.

10.10.2 Embedded Training Barracks building, 6 pairs copper, cable count allocated in the outside plant and accessible in the nearest manhole. No requirement for fiber optic cable.

10.10.3 Embedded Training Storage building, 6 pairs copper, cable count allocated in the outside plant and accessible in the nearest manhole. No requirement for fiber optic cable.

10.10.4 Embedded Training Laundry building, 6 pairs copper, cable count allocated in the outside plant and accessible in the nearest manhole. No requirement for fiber optic cable.

10.10.5 Embedded Training DFAC building, 12 pairs copper, 6 strands single mode fiber optic cable. Copper and fiber shall be installed in the building, terminated and tested.

NOTE: In the Embedded Training Facility area there shall be 12 strands of single mode cable allocated in the fiber optic cable distribution plant dedicated for use by embedded area buildings that don’t have fiber installed.
These fiber strands shall be contained in the fiber count in cable and available in the splice closures in the area manholes.

10.11 Interpreter Facilities

10.11.1 Interpreter Barracks, building, 12 pairs copper, cable count allocated in the outside plant and accessible in the nearest manhole. No requirement for fiber optic cable.

10.11.2 Interpreter MWR building, 100 pairs copper, 12 strands single mode fiber optic cable. Copper and fiber shall be installed in the building, terminated and tested.

10.11.3 Interpreter DFAC building, 12 pairs copper, 6 strands single mode fiber optic cable. Copper and fiber shall be installed in the building, terminated and tested.

NOTE: In the Interpreter Facility area there shall be 12 strands of single mode cable allocated in the fiber optic cable distribution plant dedicated for use by the interpreter facility area buildings that don't have fiber installed.

10.12 Fire Station, 25 pairs copper, 12 strands single mode fiber optic cable. Copper and fiber shall be installed in the building, terminated and tested.

10.13 Range

10.13.1 Range Observation Tower 6 pairs copper. Copper shall be installed in the tower, terminated and tested. No requirement for fiber optic cable.

10.13.2 Range Ammunition Breakdown Building, 12 pairs copper, cable count allocated in the outside plant and accessible in the nearest manhole. No requirement for fiber optic cable.

10.13.3 Range Covered bleachers, 6 pairs copper cable count allocated in the outside plant and accessible in the nearest manhole. No requirement for fiber optic cable.

10.14 MWR building, 100 pairs copper, 12 strands single mode fiber optic cable. Copper and fiber shall be installed in the building, terminated and tested.

10.15 Field Housing facility 6 pair copper count allocated in the outside plant and accessible in the nearest manhole. No requirement for fiber optic cable.

10.16 Transportation, 12 pair copper count allocated in the outside plant and accessible in the nearest manhole. No requirement for fiber optic cable.

10.17 Stone/fence/gates, 6 pair copper count allocated in the outside plant and accessible in the nearest manhole. No requirement for fiber optic cable.

10.18 Guard tower, 25 pair cable dedicated for towers, looping around tied down to all guard towers. Copper shall be installed in the tower PETs, terminated and tested.

10.19 Reception building, 12 pairs copper, 6 strands single mode fiber optic cable. Copper and fiber shall be installed in the building, terminated and tested.

10.20 DFAC, 12 pairs copper, 6 strands single mode fiber optic cable. Copper and fiber shall be installed in the building, terminated and tested.

10.21 Power Plant, 12 pairs copper, 12 strands single mode fiber optic cable. Copper and fiber shall be installed in the building, terminated and tested.

10.22 Brigade and Garrison HQ Complex,

10.22.1 Brigade Barracks; Type A, 6 pair copper count allocated in the outside plant and accessible in the nearest manhole. No requirement for fiber optic cable.

10.22.2 Brigade Barracks, Type D, 6 pair copper count allocated in the outside plant and accessible in the nearest manhole. No requirement for fiber optic cable.

10.22.3 Brigade Senior NCO Building, 6 pair copper count allocated in the outside plant and accessible in the nearest manhole. No requirement for fiber optic cable.

10.22.4 Brigade Toilet/Shower building, 6 pair copper count allocated in the outside plant and accessible in the nearest manhole. No requirement for fiber optic cable.

10.22.5 Brigade Headquarters, 50 pairs copper, 6 strands single mode fiber optic cable. Copper and fiber shall be installed in the building, terminated and tested.

10.22.6 Brigade/Garrison HQ building. 50 pairs copper, 6 strands single mode fiber optic cable. Copper and fiber shall be installed in the building, terminated and tested.

10.22.7 Brigade/Garrison Arms Storage building. 6 pair copper count allocated in the outside plant and accessible in the nearest manhole. No requirement for fiber optic cable.

10.22.8 Brigade/Garrison Motor pool, 12 pair copper count allocated in the outside plant and accessible in the nearest manhole. No requirement for fiber optic cable.

10.22.9 Brigade/Garrison POL Storage building. 6 pair copper count allocated in the outside plant and accessible in the nearest manhole. No requirement for fiber optic cable.

10.22.10 Brigade/Garrison Motor Pool. 12 pair copper count allocated in the outside plant and accessible in the nearest manhole. No requirement for fiber optic cable.

10.22.11 Brigade/Garrison Maintenance Garage. 12 pair copper count and 6 strands single mode fiber optic cable count allocated in the outside plant and accessible in the nearest manhole.

10.22.12 Brigade/Garrison Refueling Point. 12 pair copper count allocated in the outside plant and accessible in the nearest manhole. No requirement for fiber optic cable.

NOTE: In the Brigade & Garrison HQ Complex area there shall be 12 strands of single mode cable allocated in the fiber optic cable distribution plant dedicated for use by the Brigade & Garrison area buildings that don’t have fiber installed.

10.23 Bachelor Officer Quarters. 50 pairs copper, 6 strands single mode fiber optic cable. Copper and fiber shall be installed in the building, terminated and tested.

10.24 Infantry Battalion Complex

10.24.1 Infantry Battalion Barracks, Type A, 6 pair copper count allocated in the outside plant and accessible in the nearest manhole. No requirement for fiber optic cable.

10.24.2 Infantry Battalion Barracks, Type B, 6 pair copper count allocated in the outside plant and accessible in the nearest manhole. No requirement for fiber optic cable.

10.24.3 Infantry Battalion Toilet/Shower building, 6 pair copper count allocated in the outside plant and accessible in the nearest manhole. No requirement for fiber optic cable.

10.24.4 Infantry Battalion Headquarters Building, 50 pairs copper, 6 strands single mode fiber optic cable. Copper and fiber shall be installed in the building, terminated and tested.

10.24.5 Infantry Battalion Arms storage building. 6 pair copper count allocated in the outside plant and accessible in the nearest manhole. No requirement for fiber optic cable.

10.24.6 Infantry Battalion Storage building. 6 pair copper count allocated in the outside plant and accessible in the nearest manhole. No requirement for fiber optic cable.

10.24.7 Infantry Battalion Motor pool. 12 pair copper count allocated in the outside plant and accessible in the nearest manhole. No requirement for fiber optic cable.

10.24.8 Infantry Battalion POL Storage building. 12 pair copper count allocated in the outside plant and accessible in the nearest manhole. No requirement for fiber optic cable.

NOTE: In the Infantry Battalion Complex area there shall be 12 strands of single mode cable allocated in the fiber optic cable distribution plant dedicated for use by the Infantry Battalion facility area buildings that don’t have fiber installed.

10.25 Combat Support Battalion Complex

10.25.1 Combat Support Battalion Barracks, Type A, 6 pair copper count allocated in the outside plant and accessible in the nearest manhole. No requirement for fiber optic cable.

10.25.2 Combat Support Battalion Barracks, Type B, 6 pair copper count allocated in the outside plant and accessible in the nearest manhole. No requirement for fiber optic cable.

10.25.3 Combat Support Battalion Barracks, Type C, 6 pair copper count allocated in the outside plant and accessible in the nearest manhole. No requirement for fiber optic cable.

10.25.4 Combat Support Battalion Barracks, Type D, 6 pair copper count allocated in the outside plant and accessible in the nearest manhole. No requirement for fiber optic cable.

10.25.5 Combat Support Battalion Toilet/Shower building, 6 pair copper count allocated in the outside plant and accessible in the nearest manhole. No requirement for fiber optic cable.

10.25.6 Combat Support Battalion Headquarters Building, 50 pairs copper, 6 strands single mode fiber optic cable. Copper and fiber shall be installed in the building, terminated and tested.

10.25.7 Combat Support Battalion Storage building. 6 pair copper count allocated in the outside plant and accessible in the nearest manhole. No requirement for fiber optic cable.

10.25.8 Combat Support Battalion Motor pool. 12 pair copper count allocated in the outside plant and accessible in the nearest manhole. No requirement for fiber optic cable.

10.25.9 Combat Support Battalion POL Storage building. 6 pair copper count allocated in the outside plant and accessible in the nearest manhole. No requirement for fiber optic cable.

10.25.10 Combat Support Battalion Arms storage building. 6 pair copper count allocated in the outside plant and accessible in the nearest manhole. No requirement for fiber optic cable.

10.25.11 Combat Support Maintenance Garage. 12 pair copper count and 6 strands single mode fiber optic cable allocated in the outside plant and accessible in the nearest manhole.

NOTE: In the Combat Support Battalion Complex area there shall be 12 strands of single mode cable allocated in the fiber optic cable distribution plant dedicated for use by the Combat Support Battalion area buildings that don’t have fiber installed.

10.26 Combat Support Battalion (2)

10.26.1 Combat Support Battalion (2) Barracks, Type A, 6 pair copper count allocated in the outside plant and accessible in the nearest manhole. No requirement for fiber optic cable.

10.26.2 Combat Support Battalion (2) Barracks, Type B 6 pair copper count allocated in the outside plant and accessible in the nearest manhole. No requirement for fiber optic cable.

10.26.3 Combat Support Battalion (2) Barracks, Type D6 pair copper count allocated in the outside plant and accessible in the nearest manhole. No requirement for fiber optic cable.

10.26.4 Combat Support Battalion (2) Toilet/Shower building, 6 pair copper count allocated in the outside plant and accessible in the nearest manhole. No requirement for fiber optic cable.

10.26.5 Combat Support Battalion (2) Headquarters Building, 50 pairs copper, 6 strands single mode fiber optic cable. Copper and fiber shall be installed in the building, terminated and tested.

10.26.6 Combat Support Battalion (2) Storage building. 6 pair copper count allocated in the outside plant and accessible in the nearest manhole. No requirements for fiber optic cable.

10.26.7 Combat Support Battalion (2) Motor pool. 12 pair copper count and 6 strand single mode fiber optic count allocated in the outside plant and accessible in the nearest manhole.

10.26.8 Combat Support Battalion (2) POL Storage building. 6 pair copper count allocated in the outside plant and accessible in the nearest manhole. No requirements for fiber optic cable.

10.26.9 Combat Support Battalion (2) Arms storage building, 6 pair copper count allocated in the outside plant and accessible in the nearest manhole. No requirements for fiber optic cable.

10.26.10 Combat Support (2) Maintenance Garage. 12 pair copper count and 6 strand single mode fiber optic count allocated in the outside plant and accessible in the nearest manhole.

NOTE: In the Combat Support Battalion Complex (2) area there shall be 12 strands of single mode cable allocated in the fiber optic cable distribution plant dedicated for use by the Combat Support Battalion (2) area buildings that don’t have fiber installed.

10.27 Central Maintenance

10.27.1 Central Maintenance Garage, 12 pair copper count and 6 strand single mode fiber optic count allocated in the outside plant and accessible in the nearest manhole.

10.27.2 Central Maintenance Motor Pool, 12 pair copper count and 6 strand single mode fiber optic count allocated in the outside plant and accessible in the nearest manhole.

10.27.3 Central Maintenance POL Storage building. 12 pair copper count allocated in the outside plant and accessible in the nearest manhole. No requirement for fiber optic cable.

10.27.4 Central Receiving Warehouse, 12 pair copper and 6 strand single mode fiber optic count allocated in the outside plant and accessible in the nearest manhole.

10.28 Communications Building. All copper and fiber cables originate from this building.

10.29 Training Building, 12 pair copper count and 6 strand single mode fiber optic count allocated in the outside plant and accessible in the nearest manhole.

10.30 Arms Storage building, 6 pairs copper cable count allocated in the outside plant and accessible in the nearest manhole. No requirement for fiber optic cable.

10.31 Ammunition Supply point

10.31.1 Ammunition Supply point 6 pair copper count allocated in the outside plant and accessible in the nearest manhole. No requirement for fiber optic cable.

10.31.2 Ammunition Supply point perimeter fence, No copper or fiber optic cable required.

10.31.3 Ammunition Supply Guard house, 6 pairs copper out of the 25 pair guard tower cable.

10.31.4 Ammunition Supply Guard towers, 25 pair cable dedicated for towers, looping around tied down to all guard towers. This 25 pair is not the 25 pair for the other towers.

10.32 Helipad, 6 pairs copper, cable count allocated in the outside plant and accessible in the nearest manhole. No requirement for fiber optic cable.

10.33 Community center, 100 pairs copper cable, 6 strands single mode fiber optic cable.

10.34 Medical Clinic, 100 pairs copper cable, 12 strands single mode fiber optic cable.

-- End of Section --

SECTION 02220

DEMOLITION

PART 1 GENERAL

1.1 GENERAL REQUIREMENTS

Do not begin demolition until authorization is received from the Contracting Officer. Remove rubbish and debris from the project site; do not allow accumulations inside or outside the site. The work includes demolition, and removal of resulting rubbish and debris. Rubbish and debris shall be removed from Government property daily, unless otherwise directed, to avoid accumulation at the demolition site. Materials that cannot be removed daily shall be stored in areas specified by the Contracting Officer.

1.2 DUST AND DEBRIS CONTROL

Prevent the spread of dust and debris to occupied portions of the site and avoid the creation of a nuisance or hazard in the surrounding area. Do not use water if it results in hazardous or objectionable conditions such as, but not limited to, ice, flooding, or pollution.

1.3 PROTECTION

1.3.1 Traffic Control Signs

Where pedestrian and driver safety is endangered in the area of removal work, use traffic barricades with flashing lights. Notify the Contracting Officer prior to beginning such work.

1.3.2 Existing Work

Before beginning any demolition work, the Contractor shall survey the site and examine the drawings and specifications to determine the extent of the work. The Contractor shall take necessary precautions to avoid damage to existing items to remain in place, to be reused, or to remain the property of the Government; any damaged items shall be repaired or replaced as approved by the Contracting Officer. The Contractor shall coordinate the work of this section with all other work and shall construct and maintain shoring, bracing, and supports as required. The Contractor shall ensure that structural elements are not overloaded and shall be responsible for increasing structural supports or adding new supports as may be required as a result of any cutting, removal, or demolition work performed under this contract. Do not overload pavements to remain. Provide new supports and reinforcement for existing construction weakened by demolition or removal work. Repairs, reinforcement, or structural replacement must have Contracting Officer approval.

1.3.3 Facilities

Protect electrical and mechanical services and utilities. Where removal of existing utilities and pavement is specified or indicated, provide approved barricades, temporary covering of exposed areas, and temporary services or connections for electrical and mechanical utilities. Floors, roofs, walls, columns, pilasters, and other structural components that are designed and

constructed to stand without lateral support or shoring, and are determined to be in stable condition, shall remain standing without additional bracing, shoring, of lateral support until demolished, unless directed otherwise by the Contracting Officer. The Contractor shall ensure that no elements determined to be unstable are left unsupported and shall be responsible for placing and securing bracing, shoring, or lateral supports as may be required as a result of any cutting, removal, or demolition work performed under this contract.

1.3.4 Protection of Personnel

During the demolition work the Contractor shall continuously evaluate the condition of the structure being demolished and take immediate action to protect all personnel working in and around the demolition site. No area, section, or component of floors, roofs, walls, columns, pilasters, or other structural element will be allowed to be left standing without sufficient bracing, shoring, or lateral support to prevent collapse or failure while workmen remove debris or perform other work in the immediate area.

1.4 USE OF EXPLOSIVES

Use of explosives will not be permitted.

PART 2 PRODUCTS

Not Applicable.

PART 3 EXECUTION

3.1 EXISTING FACILITIES TO BE REMOVED

3.1.1 Structures

Existing structures indicated shall be removed to below grade. Interior walls, other than retaining walls and partitions, shall be removed to grade or to top of concrete slab on ground. Basement slabs shall be broken up to permit drainage. Sidewalks, curbs, gutters and street light bases shall be removed as indicated.

3.1.2 Utilities and Related Equipment

Remove existing utilities, as indicated on drawings and as uncovered by work and terminate in a manner conforming to the nationally recognized code covering the specific utility and approved by the Contracting Officer. When utility lines are encountered that are not indicated on the drawings, the Contracting Officer shall be notified prior to further work in that area. Remove meters and related equipment and deliver to a location in accordance with instructions of the Contracting Officer. If utility lines are encountered that are not shown on drawings, contact the Contracting Officer for further instructions.

3.1.3 Paving and Slabs

Remove concrete and asphaltic concrete paving and slabs including aggregate base as indicated to a depth below new finish grade. Provide neat sawcuts at limits of pavement removal as indicated.

3.2 FILLING

Holes, open basements and other hazardous openings shall be filled in accordance with Section 02315.

3.3 DISPOSITION OF MATERIAL

3.3.1 Unsalvageable Material

Concrete, masonry, and other noncombustible material, except concrete permitted to remain in place, shall be disposed of in the disposal area located as designated by Contracting Officer. The fill in the disposal area shall remain below grade elevation and after disposal is completed, the disposal area shall be uniformly graded to drain.

3.4 CLEANUP

Debris and rubbish shall be removed from basement and similar excavations. Debris shall be removed and transported in a manner that prevents spillage on streets or adjacent areas. Local regulations regarding hauling and disposal shall apply.

3.4.1 Debris and Rubbish

Debris and rubbish shall be removed from basement and similar excavations. Debris shall be removed and transported in a manner that prevents spillage on streets or adjacent areas. Local regulations regarding hauling and disposal shall apply.

-- End of Section --

SECTION 02231

CLEARING AND GRUBBING

PART 1 GENERAL

Not Applicable

PART 2 PRODUCTS

Not Applicable

PART 3 EXECUTION

3.1 PROTECTION

3.1.1 Roads and Walks

Keep roads and walks free of dirt and debris at all times.

3.1.2 Trees, Shrubs, and Existing Facilities

Trees and vegetation to be left standing shall be protected from damage incident to clearing, grubbing, and construction operations by the erection of barriers or by such other means as the circumstances require.

3.1.3 Utility Lines

Protect existing utility lines that are indicated to remain from damage. Notify the Contracting Officer immediately of damage to or an encounter with an unknown existing utility line. The Contractor shall be responsible for the repairs of damage to existing utility lines that are indicated or made known to the Contractor prior to start of clearing and grubbing operations. When utility lines which are to be removed are encountered within the area of operations, the Contractor shall notify the Contracting Officer in ample time to minimize interruption of the service.

3.2 CLEARING

Clearing shall consist of the felling, trimming, and cutting of trees into sections and the satisfactory disposal of the trees and other vegetation designated for removal, including downed timber, snags, brush, and rubbish occurring within the areas to be cleared. Clearing shall also include the removal and disposal of structures that obtrude, encroach upon, or otherwise obstruct the work. Trees, stumps, roots, brush, and other vegetation in areas to be cleared shall be cut off flush with or below the original ground surface, except such trees and vegetation as may be indicated or directed to be left standing.

3.3 TREE REMOVAL

Where indicated or directed, trees and stumps that are designated as trees shall be removed from areas outside those areas designated for clearing and grubbing. This work shall include the felling of such trees and the removal of their stumps and roots as specified in paragraph GRUBBING. Trees shall be disposed of as specified in paragraph DISPOSAL OF MATERIALS.

3.4 GRUBBING

Grubbing shall consist of the removal and disposal of stumps, roots larger than 75 mm in diameter, and matted roots from the designated grubbing areas. Material to be grubbed, together with logs and other organic or metallic debris not suitable for foundation purposes, shall be removed to a depth of not less than 455 mm below the original surface level of the ground in areas indicated to be grubbed and in areas indicated as construction areas under this contract, such as areas for buildings, and areas to be paved. Depressions made by grubbing shall be filled with suitable material and compacted to make the surface conform with the original adjacent surface of the ground.

3.5 DISPOSAL OF MATERIALS

3.5.1 Nonsaleable Materials

Logs, stumps, roots, brush, rotten wood, and other refuse from the clearing and grubbing operations, shall be disposed of in the designated waste disposal area.

-- End of Section --

SECTION 02300

EARTHWORK

PART 1 GENERAL

1.1 REFERENCES

The publications listed below form a part of this specification to the extent referenced. The publications are referred to in the text by basic designation only.

ASTM INTERNATIONAL (ASTM)

ASTM C 136	(1996a) Sieve Analysis of Fine and Coarse Aggregates
ASTM D 422	(1963; R 1998) Particle-Size Analysis of Soils
ASTM C 33	(2003) Concrete Aggregates
ASTM D 1140	(1997) Amount of Material in Soils Finer than the No. 200 (75-micrometer) Sieve
ASTM D 1556	(2000) Density and Unit Weight of Soil in Place by the Sand-Cone Method
ASTM D 1557	(1998) Laboratory Compaction Characteristics of Soil Using Modified Effort (56,000 ft-lbf/cu. ft. (2,700 kN-m/cu.m.))
ASTM D 2216	(1998) Laboratory Determination of Water (Moisture) Content of Soil and Rock by Mass
ASTM D 2487	(2000) Classification of Soils for Engineering Purposes (Unified Soil Classification System)
ASTM D 3017	(1988; R 1996e1) Water Content of Soil and Rock in Place by Nuclear Methods (Shallow Depth)
ASTM D 4318	(2000) Liquid Limit, Plastic Limit, and Plasticity Index of Soils

1.2 DEFINITIONS

1.2.1 Satisfactory Materials

Satisfactory materials shall comprise any materials classified by ASTM D 2487 as SM, SW-SM, SC, SW-SC, or as listed below. Satisfactory materials for grading shall be comprised of stones less than 200 mm , except for fill material for pavements which shall be comprised of stones

less than 75 mm in any dimension.

1.2.1.1 Soil Classifications for Satisfactory Materials per ASTM D 2487

A. GW: Well graded gravel with or without sand
B. GP: Poorly graded gravel with or without sand
C. GM: Silty gravel with or without sand
D. GP-GM: Poorly graded gravel with or without silt and sand
E. GW-GM: Well graded gravel with or without silt and sand
F. GC: Clayey gravel with or without sand
G. GP-GC: Poorly graded gravel with or without clay and sand (or silty clay and sand)
H. GM-GC: Silty, clayey gravel with or without sand
I. SW: Well graded sand with or without gravel
J. SM: Silty sand with or without gravel
K. SW-SM: Well graded sand with or without silt and gravel
L. SC: Clayey sand with or without gravel
M. SW-SC: Well graded sand with or without clay and gravel (or silty clay and gravel)

1.2.2 Unsatisfactory Materials

Materials which do not comply with the requirements for satisfactory materials are unsatisfactory. Unsatisfactory materials also include man-made fills; trash; refuse; backfills from previous construction; and material classified as satisfactory which contains root and other organic matter or frozen material. The Government shall be notified of any contaminated materials.

1.2.3 Cohesionless and Cohesive Materials

Cohesionless materials include materials classified in ASTM D 2487 as GW, GP, SW, and SP, or as listed below. Cohesive materials include materials classified as GC, SC, ML, CL, MH, and CH, or as listed below. Materials classified as GM and SM will be identified as cohesionless only when the fines are nonplastic. Testing required for classifying materials shall be in accordance with ASTM D 4318, ASTM C 136, ASTM D 422, and ASTM D 1140.

1.2.3.1 Cohesionless and Cohesive Materials per ASTM D 2487

Cohesionless Materials:

GW: Well graded gravel with or without sand
GP: Poorly graded gravel with or without sand
SW: Well graded sand with or without gravel
SP: Poorly graded sand with or without gravel

Cohesive Materials:

GC: Clayey gravel with or without sand
SC: Clayey sand with or without gravel
ML: Silt with or without sand or gravel, or sandy silt with or without gravel, or gravelly silt with or without sand
CL: Lean clay with or without sand or gravel, or sandy lean clay with or without gravel, or gravelly lean clay with or without sand
MH: Elastic silt with or without sand or gravel, or sandy elastic silt with or without gravel, or gravelly elastic silt with or without sand
CH: Fat clay with or without sand or gravel, or sandy fat clay with or without gravel, or gravelly fat clay with or without sand

Other Types:

GM: Silty gravel with sand will be identified as cohesionless only when the fines are nonplastic.
SM: Silty sand with gravel will be identified as cohesionless only when the fines are nonplastic.

1.2.4 Degree of Compaction

Degree of compaction required is expressed as a percentage of the maximum density obtained by the test procedure presented in ASTM D 1557. Required moisture range is plus or minus 2 percent of optimum moisture content.

1.2.5 Expansive Soils

Expansive soils are defined as soils classified as CH, MH, ML, and CL that have liquid limits equal to or greater than 45 and plasticity indices equal to or greater than 25 when tested in accordance with ASTM D 4318.

1.2.6 Gypsiferous Soils

Gypsiferous soils are those found to contain 15% or more gypsum as determined by visual inspection. If there is a disargeement with the classification by visual inspection, the following test shall apply. A 1000 gram sample shall be heated to 110 degrees C for 24 hours. At this point the sample will be broken apart. The gypsum can be identified by its white color. The gypsum content can be determined by weight from a chemical analysis, if necessary, to establish exact quantities. All testing will be done at the expense of the Contractor.

1.2.7 Rock

Rock includes all natural solid mineral materials occurring in masses or fragments not classified as soil according to ASTM D 3017.

1.2.8 Topsoil

Topsoil shall be the uppermost part or layer of the soil normally moved in tillage or cultivation. Topsoil shall be considered to be the topmost mineral soil horizon containing an admixture of humified organic matter. Topsoil is located at or near the surface and characterized as the zone of maximum leaching or eluviation.

1.3 SUBMITTALS

Items with a "G" designation require Government approval; items not having a "G" designation are for information only. The following is submitted in accordance with Section 01335 SUBMITTAL PROCEDURES FOR DESIGN/BUILD PROJECT. It is included in the Design Analysis for this project.

SD-03 Product Data

Earthwork; G.

Proposed source of borrow material.

Notification of encountering rock in the project. Advance notice on the opening of excavation or borrow areas.

SD-06 Test Reports

Testing

Borrow Site Testing

Within 24 hours of conclusion of physical tests, thre (3) copies of test results, including calibration curves and results of calibration tests. Results of testing at the borrow site.

SD-07 Certificates

Testing

Qualifications of the Corps validated commercial testing laboratory or the Contractor's validated testing facilities.

1.4 CLASSIFICATION OF EXCAVATION

No consideration will be given to the nature of the materials, and all excavation will be designated as unclassified excavation.

1.5 BLASTING

Blasting will not be permitted.

1.6 UTILIZATION OF EXCAVATED MATERIALS

Unsatisfactory materials removed from excavations shall be disposed of in designated waste disposal or spoil areas. Satisfactory material removed from excavations shall be used, insofar as practicable, in the construction of fills, embankments, subgrades, shoulders, bedding (as backfill), and for similar purposes. No satisfactory excavated material shall be wasted without specific written authorization. Satisfactory material authorized to be wasted shall be disposed of in designated areas approved for surplus material storage or designated waste areas as directed. Newly designated waste areas on Government-controlled land shall be cleared and grubbed before disposal of waste material thereon. Coarse rock from excavations shall be stockpiled and used for constructing slopes or embankments adjacent to streams, or sides and bottoms of channels and for protecting against erosion. No excavated material shall be disposed of to obstruct the flow of any stream, endanger a partly finished structure, impair the efficiency or appearance of any structure, or be detrimental to the completed work in any way.

PART 2 PRODUCTS

2.1 CAPILLARY WATER BARRIER

Provide capillary water barrier of clean, poorly graded crushed rock, crushed gravel, or uncrushed gravel placed beneath a building slab with a vapor barrier as shown on drawings to cut off the capillary flow of pore water to the area immediately below. Conform to ASTM C 33 for fine aggregate grading with a maximum of 3 percent by weight passing ASTM D 1140, 75 micrometers No. 200 sieve.

PART 3 EXECUTION

3.1 STRIPPING OF TOPSOIL

Topsoil, where encountered, shall be stripped to its full depth within the designated excavations and grading lines and disposited in storage piles for later use. Excess topsoil shall be removed from the site and disposed of.

3.2 GENERAL EXCAVATION

The Contractor shall perform excavation of every type of material encountered within the limits of the project to the lines, grades, and elevations indicated and as specified. Grading shall be in conformity with the typical sections shown and the tolerances specified in paragraph FINISHING. Satisfactory excavated materials shall be transported to and placed in fill or embankment within the limits of the work. Unsatisfactory materials encountered within the limits of the work shall be excavated below grade and replaced with satisfactory materials as directed. Such excavated material and the satisfactory material ordered as replacement shall be included in excavation. Surplus satisfactory excavated material not required for fill or embankment shall be disposed of in areas approved for surplus material storage or designated waste areas. Unsatisfactory excavated material shall be disposed of in designated waste or spoil areas. During construction, excavation and fill shall be performed in a manner and sequence that will provide proper drainage at all times. Material required for fill or embankment in excess of that produced by excavation within the grading limits shall be excavated from the borrow areas indicated or from other approved areas selected by the Contractor as specified.

3.2.1 Ditches, Gutters, and Channel Changes

Excavation of ditches, gutters, and channel changes shall be accomplished by cutting accurately to the cross sections, grades, and elevations shown. Ditches and gutters shall not be excavated below grades shown. Excessive open ditch or gutter excavation shall be backfilled with satisfactory, thoroughly compacted, material or with suitable stone or cobble to grades shown. Material excavated shall be disposed of as shown or as directed, except that in no case shall material be deposited less than 1 meter from the edge of a ditch. The Contractor shall maintain excavations free from detrimental quantities of leaves, brush, sticks, trash, and other debris until final acceptance of the work.

3.2.2 Drainage Structures

Excavations shall be made to the lines, grades, and elevations shown, or as directed. Trenches and foundation pits shall be of sufficient size to permit the placement and removal of forms for the full length and width of structure footings and foundations as shown. Rock or other hard foundation material shall be cleaned of loose debris and cut to a firm, level, stepped, or serrated surface. Loose disintegrated rock and thin strata shall be removed. When concrete or masonry is to be placed in an excavated area, the bottom of the excavation shall not be disturbed. Excavation to the final grade level shall not be made until just before the concrete or masonry is to be placed.

3.2.3 Drainage

Provide for the collection and disposal of surface and subsurface water encountered during construction. Completely drain construction site during periods of construction to keep soil materials sufficiently dry. Construct storm drainage features (ponds/basins) at the earliest stages of site development, and throughout construction grade the construction area to provide positive surface water runoff away from the construction activity or provide temporary ditches, swales, and other drainage features and equipment as required to maintain dry soils. When unsuitable working platforms for equipment operation and unsuitable soil support for subsequent construction features develop, remove unsuitable material and provide new soil material as specified herein. It is the responsibility of the Contractor to assess the soil and ground water conditions presented by the plans and specifications and to employ necessary measures to permit construction to proceed.

3.2.4 Jacking, Boring, and Tunneling

Unless otherwise indicated, provide excavation by open cut except that sections of a trench may be jacked, bored, or tunneled if, in the opinion of the Contracting Officer, the pipe, cable, or duct can be safely and properly installed and backfill can be properly compacted in such sections.

3.3 SELECTION OF BORROW MATERIAL

Borrow material shall be selected to meet the requirements and conditions of the particular fill or embankment for which it is to be used. Borrow material shall be obtained from the borrow areas within the limits of the project site, selected by the Contractor. Unless otherwise provided in the contract, the Contractor shall obtain from the Government the right to procure material, pay royalties and other charges involved, and bear the expense of developing the sources, including rights-of-way for hauling. Borrow material from approved sources on Government-controlled land may be obtained without payment of royalties. Unless specifically provided, no borrow shall be obtained within the limits of the project site without prior written approval. Necessary clearing, grubbing, and satisfactory drainage of borrow pits and the disposal of debris thereon shall be considered related operations to the borrow excavation.

3.4 BACKFILL

Backfill shall be placed in lifts and compacted to at least 95 percent laboratory maximum density for all materials. Ground surface on which backfill is to be placed shall be prepared as specified in paragraph PREPARATION OF GROUND SURFACE FOR EMBANKMENTS. Compaction requirements for backfill materials shall also conform to the applicable portions of paragraphs PREPARATION OF GROUND SURFACE FOR EMBANKMENTS, EMBANKMENTS, and SUBGRADE PREPARATION. Compaction shall be accomplished by sheepsfoot rollers, pneumatic-tired rollers, steel-wheeled rollers, vibratory compactors, or other approved equipment as appropriate for the soil type.

3.5 STRUCTURAL EXCAVATION

Ensure that footing subgrades have been inspected and approved by the Contracting Officer prior to concrete placement.

3.6 PREPARATION OF GROUND SURFACE FOR EMBANKMENTS

3.6.1 General Requirements

Ground surface on which fill is to be placed shall be stripped of live, dead, or decayed vegetation, rubbish, debris, and other unsatisfactory material; plowed, disked, or otherwise broken up to a depth of 200 mm ; pulverized; moistened or aerated as necessary; thoroughly mixed; and compacted to at least 95 percent laboratory maximum density for all materials. Compaction shall be accomplished by sheepsfoot rollers, pneumatic-tired rollers, steel-wheeled rollers, vibratory compactors, or other approved equipment. The prepared ground surface shall be scarified and moistened or aerated as required just prior to placement of embankment materials to assure adequate bond between embankment material and the prepared ground surface.

3.6.2 Frozen Material

Embankment shall not be placed on a foundation which contains frozen material, or which has been subjected to freeze-thaw action. This prohibition encompasses all foundation types, including the natural ground, all prepared subgrades (whether in an excavation or on an embankment) and all layers of previously placed and compacted earth fill which become the foundations for successive layers of earth fill. All material that freezes or has been subjected to freeze-thaw action during the construction work, or during periods of temporary shutdowns, such as, but not limited to, nights, holidays, weekends, winter shutdowns, or earthwork operations, shall be removed to a depth that is acceptable to the Government and replaced with new material. Alternatively, the material will be thawed, dried, reworked, and recompacted to the specified criteria before additional material is placed. The Government will determine when placement of fill shall cease due to cold weather. The Government may elect to use average daily air temperatures, and/or physical observation of the soils for his determination. Embankment material shall not contain frozen clumps of soil, snow, or ice.

3.7 EMBANKMENTS

3.7.1 Earth Embankments

Earth embankments shall be constructed from satisfactory materials free of organic or frozen material and rocks with any dimension greater than 75 mm. The material shall be placed in successive horizontal layers of loose material not more than 200 millimeters in depth. Each layer shall be spread uniformly on a soil surface that has been moistened or aerated as necessary, and scarified or otherwise broken up so that the fill will bond with the surface on which it is placed. After spreading, each layer shall be plowed, disked, or otherwise broken up; moistened or aerated as necessary; thoroughly mixed; and compacted to at least 95 percent laboratory maximum density for all materials. Compaction requirements for the upper portion of earth embankments forming subgrade for pavements shall be identical with those requirements specified in paragraph SUBGRADE PREPARATION. Compaction shall be accomplished by sheepsfoot rollers, pneumatic-tired rollers, steel-wheeled rollers, vibratory compactors, or other approved equipment.

3.8 SUBGRADE PREPARATION

3.8.1 Construction

Subgrade shall be shaped to line, grade, and cross section, and compacted as specified. This operation shall include plowing, disking, and any moistening or aerating required to obtain specified compaction. Soft or otherwise unsatisfactory material shall be removed and replaced with satisfactory excavated material or other approved material as directed. Rock encountered in the cut section shall be excavated to a depth of 150 mm below finished grade for the subgrade. Low areas resulting from removal of unsatisfactory material or excavation of rock shall be brought up to required grade with satisfactory materials, and the entire subgrade shall be shaped to line, grade, and cross section and compacted as specified. The elevation of the finish subgrade shall not vary more than 15 mm from the established grade and cross section.

3.8.2 Compaction

Compaction shall be accomplished by sheepsfoot rollers, pneumatic-tired rollers, steel-wheeled rollers, vibratory compactors, or other approved equipment. Except for paved areas, each layer of the embankment shall be compacted to at least 95 percent of laboratory maximum density.

3.8.2.1 Subgrade for Pavements

Subgrade for pavements shall be compacted to at least 95 percentage laboratory maximum density for the depth below the surface of the pavement shown.

3.9 OPENING AND DRAINAGE OF EXCAVATION AND BORROW PITS

Except as otherwise permitted, excavate borrow pits and other excavation areas providing adequate drainage. Transport overburden and other spoil material to designated spoil areas or otherwise dispose of as directed. Provide neatly trimmed and drained borrow pits after the excavation is completed. Ensure that excavation of any area, operation of borrow pits, or dumping of spoil material results in minimum detrimental effects on natural environmental conditions.

3.10 FINISHING

The surface of excavations, embankments, and subgrades shall be finished to a smooth and compact surface in accordance with the lines, grades, and cross sections or elevations shown. The degree of finish for graded areas shall be within 30 mm of the grades and elevations indicated except that the degree of finish for subgrades shall be specified in paragraph SUBGRADE PREPARATION. Gutters and ditches shall be finished in a manner that will result in effective drainage. The surface of areas to be turfed shall be finished to a smoothness suitable for the application of turfing materials.

3.10.1 Subgrade and Embankment Protection

During construction, embankments and excavations shall be kept shaped and drained. Ditches and drains along subgrade shall be maintained to drain effectively at all times. The finished subgrade shall not be disturbed by traffic or other operation and shall be protected and maintained by the Contractor in a satisfactory condition until ballast, subbase, base, or pavement is placed. The storage or stockpiling of materials on the

finished subgrade will not be permitted. No subbase, base course, or pavement shall be laid until the subgrade has been checked and approved, and in no case shall subbase, base, surfacing, or pavement, be placed on a muddy, spongy, or frozen subgrade.

3.10.2 Capillary Water Barrier

Place a capillary water barrier under concrete floor and area-way slabs grade directly on the subgrade and compact with a minimum of two passes of a hand-operated plate-type vibratory compactor.

3.10.3 Grading Around Structures

Construct areas within 1.5 m outside of each building and structure line true-to-grade, shape to drain, and maintain free of trash and debris until final inspection has been completed and the work has been accepted.

3.18 TESTING

Perform testing by a Corps validated commercial testing laboratory or the Contractor's validated testing facility. If the Contractor elects to establish testing facilities, do not permit work requiring testing until the Contractor's facilities have been inspected, Corps validated and approved by the Contracting Officer. Determine field in-place density in accordance with ASTM D 1556. When test results indicate, as determined by the Contracting Officer, that compaction is not as specified, remove the material, replace and recompact to meet specification requirements. Perform tests on recompacted areas to determine conformance with specification requirements. Appoint a registered professional civil engineer to certify inspections and test results. These certifications shall state that the tests and observations were performed by or under the direct supervision of the engineer and that the results are representative of the materials or conditions being certified by the tests. The following number of tests, if performed at the appropriate time, will be the minimum acceptable for each type operation.

3.11 Fill and Backfill Material Gradation

One test per 1150 cubic meters stockpiled or in-place source material. Determine gradation of fill and backfill material in accordance with ASTM C 136, ASTM D 422 and ASTM D 1140.

3.12 In-Place Densities

3.12.2 In-Place Densities

a. One test per 185 square meters, or fraction thereof, of each lift of fill or backfill for paved areas shall be performed.

b. One test per 100 linear meters, or fraction thereof, of each lift of excavated trench of embankment or backfill for paved areas shall be performed.

c. One test per 350 square meters, or fraction thereof, of each lift of fill or backfill for unpaved areas shall be performed.

d. One test per 200 linear meters, or fraction thereof, of each lift of excavated trench in unpaved areas shall be performed.

3.13 Moisture Contents

In the stockpile, excavation, or borrow areas, perform a minimum of two tests per day per type of material or source of material being placed during stable weather conditions in accordance with ASTM D 2216. During unstable weather, perform tests as dictated by local conditions and approved by the Contracting Officer.

3.14 Optimum Moisture and Laboratory Maximum Density

Perform tests for each type material or source of material including borrow material to determine the optimum moisture and laboratory maximum density values. One representative test per 1150 cubic meters of fill and backfill, or when any change in material occurs which may affect the optimum moisture content or laboratory maximum density.

3.15 Tolerance Tests for Subgrades

Perform continuous checks on the degree of finish specified in paragraph SUBGRADE PREPARATION during construction of the subgrades.

-- End of Section --

SECTION 02315

EXCAVATION, FILLING AND BACKFILLING FOR BUILDINGS

PART 1 GENERAL

1.1 REFERENCES

The publications listed below form a part of this specification to the extent referenced. The publications are referred to in the text by basic designation only.

ASTM INTERNATIONAL (ASTM)

ASTM D 1556	(2000) Density and Unit Weight of Soil in Place by the Sand-Cone Method
ASTM D 1557	(1998) Laboratory Compaction Characteristics of Soil Using Modified Effort (56,000 ft-lbf/cu. ft. (2,700 kN-m/cu.m.))
ASTM D 2167	(1994) Density and Unit Weight of Soil in Place by the Rubber Balloon Method
ASTM D 2216	(1998) Laboratory Determination of Water (Moisture) Content of Soil and Rock
ASTM D 2487	(2000) Classification of Soils for Engineering Purposes (Unified Soil Classification System)
ASTM D 2922	(1996e1) Density of Soil and Soil-Aggregate in Place by Nuclear Methods (Shallow Depth)
ASTM D 2937	(1994) Density of Soil in Place by the Drive-Cylinder Method
ASTM D 3017	(1988; R 1996e1) Water Content of Soil and Rock in Place by Nuclear Methods (Shallow Depth)
ASTM D 4318	(2000) Liquid Limit, Plastic Limit, and Plasticity Index of Soils

1.2 DEGREE OF COMPACTION

Degree of compaction is expressed as a percentage of the maximum density obtained by the test procedure presented in ASTM D 1557, abbreviated as percent laboratory maximum density. Required moisture range is plus or minus 2 percent of optimum moisture content.

PART 2 PRODUCTS

2.1 MATERIALS

2.1.1 Satisfactory Materials

Satisfactory materials shall comprise any materials classified by ASTM D 2487.

2.1.1.1 Soil Classifications for Satisfactory Materials per ASTM D 2487

GW: Well graded gravel with or without sand
GP: Poorly graded gravel with or without sand
GM: Silty gravel with or without sand
GP-GM: Poorly graded gravel with or without silt and sand
GW-GM: Well graded gravel with or without silt and sand
GC: Clayey gravel with or without sand
GP-GC: Poorly graded gravel with or without clay and sand (or silty clay and sand)
GM-GC: Silty, clayey gravel or without with sand
SW: Well graded sand with or without gravel
SM: Silty sand with or without gravel
SW-SM: Well graded sand with or without silt and gravel
SC: Clayey sand with or without gravel
SW-SC: Well graded sand with or without clay and gravel (or silty clay and gravel)

2.1.2 Unsatisfactory Materials

Materials which do not comply with the requirements for satisfactory materials are unsatisfactory. Unsatisfactory materials also include man-made fills, trash, refuse, or backfills from previous construction. Unsatisfactory material also includes material classified as satisfactory which contains root and other organic matter, frozen material, and stones larger than 75 mm . The Government shall be notified of any contaminated materials.

2.1.3 Cohesionless and Cohesive Materials

Cohesionless materials include materials classified in ASTM D 2487, or as listed below. Cohesive materials include materials classified as such in ASTM D 2487, or as listed below.

2.1.3.1 Cohesionless and Cohesive Materials per ASTM D 2487

Cohesionless Materials:

GW: Well graded gravel with or without sand
GP: Poorly graded gravel with or without sand
SW: Well graded sand with or without gravel
SP: Poorly graded sand with or without gravel

Cohesive Materials:

GC: Clayey gravel with or without sand
SC: Clayey sand with or without gravel
ML: Silt with or without sand or gravel, or sandy silt with or without gravel, or gravelly silt with or without sand
CL: Lean clay with or without sand or gravel, or sandy lean clay with

or without gravel, or gravelly lean clay with or without sand
MH: Elastic silt with or without sand or gravel, or sandy elastic silt with or without gravel, or gravelly elastic silt with or without sand
CH: Fat clay with or without sand or gravel, or sandy fat clay with or without gravel, or gravelly fat clay with or without sand

Other Types:

GM: Silty gravel with sand will be identified as cohesionless only when the fines are nonplastic.
SM: Silty sand with gravel will be identified as cohesionless only when the fines are nonplastic.

2.1.4 Expansive Soils

Expansive soils are defined as soils classified as CH, MH, ML, and CL that have liquid limits equal to or greater than 45 and plasticity indices equal to or greater than 25 when tested in accordance with ASTM D 4318.

2.1.5 Gypsiferous Soils

Gypsiferous soils are those found to contain 15% or more gypsum as determined by visual inspection. If there is a disargeement with the classification by visual inspection, the following test shall apply. A 1000 gram sample shall be heated to 110 degrees C for 24 hours. At this point the sample will be broken apart. The gypsum can be identified by its white color. The gypsum content can be determined by weight from a chemical analysis, if necessary, to establish exact quantities. All testing will be done at the expense of the Contractor.

2.1.6 Rock

Rock includes all natural solid mineral materials occurring in masses or fragments not classified as soil according to ASTM D 3017.

2.1.7 Topsoil

Topsoil shall be the uppermost part or layer of the soil normally moved in tillage or cultivation. Topsoil shall be considered to be the topmost mineral soil horizon containing an admixture of humified organic matter. Topsoil is located at or near the surface and characterized as the zone of maximum leaching or eluviation.

2.2 CAPILLARY WATER BARRIER

Capillary Water Barrier shall consist of clean, crushed, nonporous rock, crushed gravel, or uncrushed gravel. The maximum particle size shall be 37.5 mm and no more than 2 percent by weight shall pass the 4.75 mm size sieve. Thickness of capillary water barrier shall be as indicated on Drawings, but not less than 100 mm.

PART 3 EXECUTION

3.1 CLEARING AND GRUBBING

Clearing and grubbing is specified in Section 02231 CLEARING AND GRUBBING.

3.2 EXCAVATION

Excavation shall conform to the dimensions and elevations indicated for each building, structure, and footing except as specified, and shall include trenching for utility and foundation drainage systems to a point 1.5 m beyond the building line of each building and structure, excavation for outside grease interceptors, underground fuel tanks, and all work incidental thereof. Excavation shall extend a sufficient distance from walls and footings to allow for placing and removal of forms. Excavations below indicated depths will not be permitted except to remove unsatisfactory material. Unsatisfactory material encountered below the grades shown shall be removed as directed. Satisfactory material removed below the depths indicated, without specific direction of the Government, shall be replaced, at no additional cost to the Government, with satisfactory materials to the indicated excavation grade; except that concrete footings shall be increased in thickness to the bottom of the overdepth excavations and over-break in rock excavation. Satisfactory material shall be placed and compacted as specified in paragraph FILLING AND BACKFILLING. Determination of elevations and measurements of approved overdepth excavation of unsatisfactory material below grades indicated shall be done under the direction of the Government.

3.3 SHORING

Shoring, including sheet piling, shall be furnished and installed as necessary to protect workmen, banks, adjacent paving, structures, and utilities. Shoring, bracing, and sheeting shall be removed as excavations are backfilled, in a manner to prevent caving.

3.4 CLASSIFICATION OF EXCAVATION

Excavation will be unclassified regardless of the nature of material encountered.

3.5 BLASTING

Blasting will not be permitted.

3.6 UTILITY AND DRAIN TRENCHES

Trenches for underground utilities systems and drain lines shall be excavated to the required alignments and depths. The bottoms of trenches shall be graded to secure the required slope and shall be tamped if necessary to provide a firm pipe bed. Recesses shall be excavated to accommodate bells and joints so that pipe will be uniformly supported for the entire length. Rock, where encountered, shall be excavated to a depth of at least 150 mm below the bottom of the pipe, and the overdepth shall be backfilled with satisfactory material placed and compacted in conformance with paragraph FILLING AND BACKFILLING.

3.7 BORROW

Where satisfactory materials are not available in sufficient quantity from required excavations, approved materials shall be obtained as specified in Section 02300 EARTHWORK.

3.8 EXCAVATED MATERIALS

Satisfactory excavated material required for fill or backfill shall be

placed in the proper section of the permanent work required under this section or shall be separately stockpiled if it cannot be readily placed. Satisfactory material in excess of that required for the permanent work and all unsatisfactory material shall be disposed of as specified in Section 02300 EARTHWORK.

3.9 FINAL GRADE OF SURFACES TO SUPPORT CONCRETE

Excavation to final grade shall not be made until just before concrete is to be placed. Only excavation methods that will leave the foundation rock in a solid and unshattered condition shall be used. Approximately level surfaces shall be roughened, and sloped surfaces shall be cut as indicated into rough steps or benches to provide a satisfactory bond. Shales shall be protected from slaking and all surfaces shall be protected from erosion resulting from ponding or flow of water.

3.10 SUBGRADE PREPARATION

Unsatisfactory material in surfaces to receive fill or in excavated areas shall be removed and replaced with satisfactory materials as directed by the Government. Additional excavation and fill beyond the contract assumed quantites shall be paid by the Government at a negotiated unit rate. The surface shall be scarified to a depth of 150 mm before the fill is started. Sloped surfaces steeper than 1 vertical to 4 horizontal shall be plowed, stepped, benched, or broken up so that the fill material will bond with the existing material. When subgrades are less than the specified density, the ground surface shall be broken up to a minimum depth of 150 mm pulverized, and compacted to the specified density. When the subgrade is part fill and part excavation or natural ground, the excavated or natural ground portion shall be scarified to a depth of 300 mm and compacted as specified for the adjacent fill. Material shall not be placed on surfaces that are muddy, frozen, or contain frost. Compaction shall be accomplished by sheepsfoot rollers, pneumatic-tired rollers, steel-wheeled rollers, or other approved equipment well suited to the soil being compacted. Material shall be moistened or aerated as necessary to plus 2 percent and minus 1 percent of optimum moisture. Minimum subgrade density shall be as specified in paragraph FILLING AND BACKFILLING.

3.11 FILLING AND BACKFILLING

Satisfactory materials shall be used in bringing fills and backfills to the lines and grades indicated and for replacing unsatisfactory materials. Satisfactory materials shall be placed in horizontal layers not exceeding 200 mm in loose thickness, or 150 mm when hand-operated compactors are used. After placing, each layer shall be plowed, disked, or otherwise broken up, moistened or aerated as necessary, thoroughly mixed and compacted as specified. Backfilling shall not begin until construction below finish grade has been approved, underground utilities systems have been inspected, tested and approved, forms removed, and the excavation cleaned of trash and debris. Backfill shall be brought to indicated finish grade and shall include backfill for outside grease interceptors and underground fuel tanks. Backfill shall not be placed in wet or frozen areas. Where pipe is coated or wrapped for protection against corrosion, the backfill material up to an elevation 600 mm above sewer lines and 300 mm above other utility lines shall be free from stones larger than 25 mm in any dimension. Heavy equipment for spreading and compacting backfill shall not be operated closer to foundation or retaining walls than a distance equal to the height of backfill above the top of footing; the area remaining shall be compacted in layers not more than 100 mm in compacted

thickness with power-driven hand tampers suitable for the material being compacted. Backfill shall be placed carefully around pipes or tanks to avoid damage to coatings, wrappings, or tanks. Backfill shall not be placed against foundation walls prior to 7 days after completion of the walls. As far as practicable, backfill shall be brought up evenly on each side of the wall and sloped to drain away from the wall. Each layer of fill and backfill shall be compacted to not less than the percentage of maximum density specified below:

	Percent Laboratory maximum density	
	Cohesive material	Cohesionless material
Fill, embankment, and backfill		
Under structures, building slabs, steps, paved areas, around footings, and in trenches	95	95
Under sidewalks and grassed areas	95	95
Nonfrost susceptible materials	95	95
Subgrade		
Under building slabs, steps, and paved areas, top 300 mm	95	95
Under sidewalks, top 150 mm	95	95

Approved compacted subgrades that are disturbed by the Contractor's operations or adverse weather shall be scarified and compacted as specified herein before to the required density prior to further construction thereon. Recompaction over underground utilities and heating lines shall be by hand tamping.

3.12 TESTING

Testing shall be the responsibility of the Contractor and shall be performed at no additional cost to the Government. Testing shall be performed by an approved commercial testing laboratory or may be performed by the Contractor subject to approval. Field in-place density shall be determined in accordance with standard tests methods of testing soil in place by Sand-Cone method, Rubber Balloon Method, or by Nuclear Method (Shallow depth) as according to ASTM D 1556, ASTM D 2167, or ASTM D 2922. When ASTM D 2922 standard test methods for density of soil and soil-aggregate in place are used, the calibration curves shall be checked and adjusted if necessary by the procedure described in ASTM D 2922. ASTM D 2922 results in a wet unit weight of soil and when using this method ASTM D 3017 shall be used to determine the moisture content of the soil. The calibration curves furnished with the moisture gauges shall also be checked along with density calibration checks as described in ASTM D 3017. The calibration checks of both the density and moisture gauges shall be

made at the beginning of a job on each different type of material encountered and at intervals as directed by the Government. ASTM D 2937 or standard test method for density of soil in place by Drive-Cylinder Method shall be used only for soft, fine-grained, cohesive soils. The following number of tests, if performed at the appropriate time, shall be the minimum acceptable for each type operation.

3.12.1 In-Place Densities

In-place density and moisture content test results shall be included with the Contractor's daily construction quality control reports.

3.12.1.1 In-Place Density of Subgrades

Testing frequency to be determined by Government.

3.12.1.2 In-Place Density of Fills and Backfills

Testing frequency to be determined by Government for fill or backfill areas compacted by other than hand or hand-operated machines. The density for each lift of fill or backfill materials for trenches, pits, building perimeters or other structures or areas, which are compacted with hand or hand-operated machines shall be tested as determined by Government.

3.12.2 Moisture Content

In the stockpile, excavation or borrow areas, a minimum of two tests per day per type of material or source of materials being placed is required during stable weather conditions. During unstable weather, tests shall be made as dictated by local conditions and approved moisture content shall be tested in accordance with ASTM D 2216.

3.12.3 Optimum Moisture and Laboratory Maximum Density

Tests shall be made for each type material or source of material, including borrow material to determine the optimum moisture and laboratory maximum density values. Testing frequency to be determined by Government for fill and backfill, or when any change in material occurs which may affect the optimum moisture content or laboratory maximum density will be made.

3.13 CAPILLARY WATER BARRIER

Capillary water barrier under concrete floor and area-way slabs on grade shall be placed directly on the subgrade and shall be compacted with a minimum of two passes of a hand-operated plate-type vibratory compactor.

3.14 PROTECTION

Settlement or washing that occurs in graded, topsoiled, or backfilled areas prior to acceptance of the work, shall be repaired and grades reestablished to the required elevations and slopes.

-- End of Section --

SECTION 02316

EXCAVATION, TRENCHING, AND BACKFILLING FOR UTILITIES SYSTEMS

PART 1 GENERAL

1.1 REFERENCES

The publications listed below form a part of this specification to the extent referenced. The publications are referred to in the text by basic designation only.

ASTM INTERNATIONAL (ASTM)

ASTM D 1557	(1998) Laboratory Compaction Characteristics of Soil Using Modified Effort (56,000 ft-lbf/cu. ft. (2,700 kN-m/cu.m.))
ASTM D 2487	(2000) Classification of Soils for Engineering Purposes (Unified Soil Classification System)
ASTM D 3017	(1988; R 1996e1) Water Content of Soil and Rock in Place by Nuclear Methods (Shallow Depth)
ASTM D 4318	(2000) Liquid Limit, Plastic Limit, and Plasticity Index of Soils

1.2 DEGREE OF COMPACTION

Degree of compaction shall be expressed as a percentage of the maximum density obtained by the test procedure presented in ASTM D 1557. Required moisture range is plus or minus 2 percent of optimum moisture content.

PART 2 PRODUCTS

2.1 MATERIALS

2.1.1 Satisfactory Materials

Satisfactory materials shall comprise any materials so classified by ASTM D 2487, or as listed below.

2.1.1.1 Soil Classifications for Satisfactory Materials

A. GW: Well graded gravel with or without sand
B. GP: Poorly graded gravel with or without sand
C. GM: Silty gravel with or without sand
D. GP-GM: Poorly graded gravel with or without silt and sand
E. GW-GM: Well graded gravel with or without silt and sand
F. GC: Clayey gravel with or without sand
G. GP-GC: Poorly graded gravel with or without clay and sand (or silty clay and sand)

H. GM-GC: Silty, clayey gravel or without with sand
I. SW: Well graded sand with or without gravel
J. SM: Silty sand with or without gravel
K. SW-SM: Well graded sand with or without silt and gravel
L. SC: Clayey sand with or without gravel
M. SW-SC: Well graded sand with or without clay and gravel (or silty clay and gravel)

2.1.2 Unsatisfactory Materials

Materials which do not comply with the requirements for satisfactory materials are unsatisfactory. Unsatisfactory materials also include man-made fills, trash, refuse, or backfills from previous construction. Unsatisfactory material also includes material classified as satisfactory which contains root and other organic matter, frozen material, and stones larger than 75mm. The Government shall be notified of any contaminated materials.

2.1.3 Cohesionless and Cohesive Materials

Cohesionless materials shall include materials classified as suchin ASTM D 2487s, or as listed below. Cohesive materials shall include materials classified as such in ASTM D 2487, or as listed below.

2.1.3.1 Cohesionless and Cohesive Materials per ASTM D 2487

Cohesionless Materials:

GW: Well graded gravel with or without sand
GP: Poorly graded gravel with or without sand
SW: Well graded sand with or without gravel
SP: Poorly graded sand with or without gravel

Cohesive Materials:

GC: Clayey gravel with or without sand
SC: Clayey sand with or without gravel
ML: Silt with or without sand or gravel, or sandy silt with or without gravel, or gravelly silt with or without sand
CL: Lean clay with or without sand or gravel, or sandy lean clay with or without gravel, or gravelly lean clay with or without sand
MH: Elastic silt with or without sand or gravel, or sandy elastic silt with or without gravel, or gravelly elastic silt with or without sand
CH: Fat clay with or without sand or gravel, or sandy fat clay with or without gravel, or gravelly fat clay with or without sand

Other Types:

GM: Silty gravel with sand will be identified as cohesionless only when the fines are nonplastic.
SM: Silty sand with gravel will be identified as cohesionless only when the fines are nonplastic.

2.1.4 Expansive Soils

Expansive soils are defined as soils classified as CH, MH, ML, and CL that have liquid limits equal to or greater than 45 and plasticity indices equal to or greater than 25 when tested in accordance with ASTM D 4318.

2.1.5 Gypsiferous Soils

Gypsiferous soils are those found to contain 15% or more gypsum as determined by visual inspection. If there is a disargeement with the classification by visual inspection, the following test shall apply. A 1000 gram sample shall be heated to 110 degrees C for 24 hours. At this point the sample will be broken apart. The gypsum can be identified by its white color. The gypsum content can be determined by weight from a chemical analysis, if necessary, to establish exact quantities. All testing will be done at the expense of the Contractor.

2.1.6 Rock

Rock includes all natural solid mineral materials occurring in masses or fragments not classified as soil according to ASTM D 3017.

2.1.7 Topsoil

Topsoil shall be the uppermost part or layer of the soil normally moved in tillage or cultivation. Topsoil shall be considered to be the topmost mineral soil horizon containing an admixture of humified organic matter. topsoil is located at or near the surface and characterized as the zone of maximum leaching or eluviation.

2.1.8 Unyielding Material

Unyielding material shall consist of rock and gravelly soils with stones greater than 75 millimeters in any dimension or as defined by the pipe manufacturer, whichever is smaller.

2.1.9 Unstable Material

Unstable material shall consist of materials too wet to properly support the utility pipe, conduit, or appurtenant structure.

2.1.10 Select Granular Material

Select granular material shall consist of well-graded sand, gravel, crushed gravel, crushed stone or crushed slag composed of hard, tough and durable particles, and shall contain not more than 10 percent by weight of material passing a 0.075 mm mesh sieve and no less than 95 percent by weight passing the 25 mm sieve. The maximum allowable aggregate size shall be 38 millimeters, or the maximum size recommended by the pipe manufacturer, whichever is smaller.

2.1.11 Initial Backfill Material

Initial backfill shall consist of select granular material or satisfactory materials free from rocks 38 millimeters or larger in any dimension or free from rocks of such size as recommended by the pipe manufacturer, whichever is smaller. When the pipe is coated or wrapped for corrosion protection, the initial backfill material shall be free of stones larger than 38 millimeters in any dimension or as recommended by the pipe manufacturer, whichever is smaller.

2.2 PLASTIC MARKING TAPE

Basis of Design: Terra Tape, Sentry line Detectable

Plastic marking tape shall be acid and alkali-resistant polyethylene film, minimum 75 mm (3 inches) wide with minimum thickness of 0.102 mm (0.004 inch). The tape shall be manufactured with integral wires, foil backing or other means to enable detection by a metal detector. The tape shall be of a type specifically manufactured for marking and locating underground utilities. The metallic core of the tape shall be encased in a protective jacket or provided with other means to protect it from corrosion. Tape color shall be as specified in TABLE 1 and shall bear a continuous printed inscription describing the specific utility.

TABLE 1. Tape Color

Red:	Electric
Yellow:	Gas, Oil, Dangerous Materials
Orange:	Telephone, Telegraph, Television, Police, and Fire Communications
Blue:	Water Systems
Green:	Sewer Systems

PART 3 EXECUTION

3.1 EXCAVATION

Excavation shall be performed to the lines and grades indicated. Rock excavation shall include removal and disposition of material defined as rock in paragraph MATERIALS. Earth excavation shall include removal and disposal of material not classified as rock excavation. During excavation, material satisfactory for backfilling shall be stockpiled in an orderly manner at a distance from the banks of the trench equal to 1/2 the depth of the excavation, but in no instance closer than 600 mm. Excavated material not required or not satisfactory for backfill shall be removed from the site. Grading shall be done as may be necessary to prevent surface water from flowing into the excavation, and any water accumulating shall be removed to maintain the stability of the bottom and sides of the excavation. Unauthorized overexcavation shall be backfilled in accordance with paragraph BACKFILLING AND COMPACTION at no additional cost to the Government.

3.1.1 Trench Excavation Requirements

The trench shall be excavated as recommended by the manufacturer of the pipe to be installed. Trench walls below the top of the pipe shall be sloped, or made vertical, and of such width as recommended in the manufacturer's installation manual. Where no manufacturer's installation manual is available, trench walls shall be made vertical. Trench walls more than 1.5 meters high shall be shored, cut back to a stable slope, or provided with equivalent means of protection for employees who may be exposed to moving ground or cave in. Vertical trench walls more than 1.5 meters high shall be shored. Trench walls which are cut back shall be excavated to at least the angle of repose of the soil. Special attention shall be given to slopes which may be adversely affected by weather or moisture content. The trench width below the top of pipe shall not exceed 600 mm (24 inches) plus pipe outside diameter (O.D.) for pipes of less than 600 mm (24 inches) inside diameter and shall not exceed 900 mm (36 inches) plus pipe outside diameter for sizes larger than 600 mm (24 inches) inside diameter. Where recommended trench widths are exceeded, redesign, stronger pipe, or special installation procedures shall be utilized by the Contractor. The cost of redesign, stronger pipe, or special installation procedures shall be borne by the Contractor without any additional cost to

the Government.

3.1.1.1 Bottom Preparation

The bottoms of trenches shall be accurately graded to provide uniform bearing and support for the bottom quadrant of each section of the pipe. Bell holes shall be excavated to the necessary size at each joint or coupling to eliminate point bearing. Stones of 75 millimeters or greater in any dimension, or as recommended by the pipe manufacturer, whichever is smaller, shall be removed to avoid point bearing.

3.1.1.2 Removal of Unyielding Material

Where overdepth is not indicated and unyielding material is encountered in the bottom of the trench, such material shall be removed 100 millimeters below the required grade and replaced with suitable materials as provided in paragraph BACKFILLING AND COMPACTION.

3.1.1.3 Removal of Unstable Material

Where unstable material is encountered in the bottom of the trench, such material shall be removed to the depth directed and replaced to the proper grade with select granular material as provided in paragraph BACKFILLING AND COMPACTION. When removal of unstable material is required due to the Contractor's fault or neglect in performing the work, the resulting material shall be excavated and replaced by the Contractor without additional cost to the Government.

3.1.1.4 Excavation for Appurtenances

Excavation for manholes, catch-basins, inlets, or similar structures shall be sufficient to leave at least 300 mm clear between the outer structure surfaces and the face of the excavation or support members. Rock shall be cleaned of loose debris and cut to a firm surface either level, stepped, or serrated, as shown or as directed. Loose disintegrated rock and thin strata shall be removed. Removal of unstable material shall be as specified above. When concrete or masonry is to be placed in an excavated area, special care shall be taken not to disturb the bottom of the excavation. Excavation to the final grade level shall not be made until just before the concrete or masonry is to be placed.

3.1.1.5 Jacking, Boring, and Tunneling

Unless otherwise indicated, excavation shall be by open cut except that sections of a trench may be jacked, bored, or tunneled if, in the opinion of the Government, the pipe, cable, or duct can be safely and properly installed and backfill can be properly compacted in such sections.

3.1.2 Stockpiles

Stockpiles of satisfactory and unsatisfactory and wasted materials shall be placed and graded as specified. Stockpiles shall be kept in a neat and well drained condition, giving due consideration to drainage at all times. The ground surface at stockpile locations shall be cleared, grubbed, and sealed by rubber-tired equipment, excavated satisfactory and unsatisfactory materials shall be separately stockpiled. Stockpiles of satisfactory materials shall be protected from contamination which may destroy the quality and fitness of the stockpiled material. If the Contractor fails to protect the stockpiles, and any material becomes unsatisfactory, such

material shall be removed and replaced with satisfactory material from approved sources at no additional cost to the Government. Locations of stockpiles of satisfactory materials shall be subject to prior approval of the Government.

3.2 BACKFILLING AND COMPACTION

Backfill material shall consist of satisfactory material, select granular material, or initial backfill material as required. Backfill shall be placed in layers not exceeding 150 mm loose thickness for compaction by hand operated machine compactors, and 200 mm loose thickness for other than hand operated machines, unless otherwise specified. Each layer shall be compacted to at least 95 percent maximum density for all soils, unless otherwise specified.

3.2.1 Trench Backfill

Trenches shall be backfilled to the grade shown. The trench shall be backfilled to 0.6 meters above the top of pipe prior to performing the required pressure tests. The joints and couplings shall be left uncovered during the pressure test.

3.2.1.1 Replacement of Unyielding Material

Unyielding material removed from the bottom of the trench shall be replaced with select granular material or initial backfill material.

3.2.1.2 Replacement of Unstable Material

Unstable material removed from the bottom of the trench or excavation shall be replaced with select granular material placed in layers not exceeding 150 mm loose thickness.

3.2.1.3 Bedding and Haunching

Bedding and Haunching shall be graded coarse sand and gravels, granular and noncohesive with maximum size of 19 mm and not more than 5% passing No. 200 (75 µm) sieve. Bedding for all culverts and sewer, water pipes less that 1.25 meters under road crossings shall have reinforced concrete cover at least 150 mm thick around pipe. See details on sheet SC-10.

3.2.1.4 Initial backfill

Initial backfill shall be finely divided, job-excavated sand, or borderline clean with fines sand-clay or gravel-clay material free from debris, stones larger than 19 mm, organic matter, and frozen material, with less than 12% passing a No. 200 (75 µm) sieve.

3.2.1.5 Carefully placed backfill

Carefully placed backfill shall be job excavated material free from debris, stones larger than 1/2" (13 mm), organic matter, and frozen material.

3.2.1.6 Remaining Backfill

The remainder of the trench, except for special materials for roadways, shall be filled with satisfactory material. Backfill material shall be placed and compacted as follows:

a. Roadways: Backfill shall be placed up to the elevation at which the requirements in Section 02300 EARTHWORK control. Water flooding or jetting methods of compaction will not be permitted.

b. Sidewalks, Turfed or Seeded Areas and Miscellaneous Areas: Backfill shall be deposited in layers of a maximum of 300 mm loose thickness, and compacted to 95 percent maximum density for all soils. Compaction by water flooding or jetting will not be permitted. This requirement shall also apply to all other areas not specifically designated above.

3.2.2 Backfill for Appurtenances

After the manhole, catchbasin, inlet, or similar structure has been constructed and the concrete has been allowed to cure for 7 days, backfill shall be placed in such a manner that the structure will not be damaged by the shock of falling earth. The backfill material shall be deposited and compacted as specified for final backfill, and shall be brought up evenly on all sides of the structure to prevent eccentric loading and excessive stress.

3.3 SPECIAL REQUIREMENTS

Special requirements for both excavation and backfill relating to the specific utilities are as follows:

3.3.1 Water Lines and Sanitary Sewers

Trenches shall be of a depth to provide a minimum cover of 0.8 meters from the existing ground surface, or from the indicated finished grade, whichever is lower, to the top of the pipe.

3.3.2 Electrical Distribution System

Direct burial cable and conduit or duct line shall have a minimum cover of 600 mm from the finished grade, unless otherwise indicated. Special trenching requirements for direct-burial electrical cables and conduits are specified in Section 16375 ELECTRICAL DISTRIBUTION SYSTEM, UNDERGROUND.

3.3.3 Plastic Marking Tape

Warning tapes shall be installed directly above the pipe, at a depth of 450 millimeters below finished grade unless otherwise shown.

3.4 INSPECTION

Inspection shall be the responsibility of the Contractor and shall be performed at no additional cost to the Government.

3.4.1 Displacement of Sewers

After trench backfill has been compacted to 0.6 meters above the top of the pipe, the pipe shall be inspected to determine whether significant displacement has occurred. This inspection shall be conducted in the presence of the Government. Pipe sizes larger than 900 mm (36 inches) shall be entered and examined, while smaller diameter pipe shall be inspected by shining a light between manholes or manhole locations. If, in the judgement of the Government , the interior of the pipe shows poor alignment or any other defects that would cause improper functioning of the

system, the defects shall be remedied as directed at no additional cost to the Government.

-- End of Section --

SECTION 03100

STRUCTURAL CONCRETE FORMWORK

PART 1 GENERAL

1.1 REFERENCES

The publications listed below form a part of this specification to the extent referenced. The publications are referred to in the text by basic designation only.

ACI INTERNATIONAL (ACI)

ACI 347R (1994) Guide to Formwork for Concrete

1.2 SUBMITTALS

Government approval is required for submittals with a "G" designation; submittals not having a "G" designation are for information only. When used, a designation following the "G" designation identifies the office that will review the submittal for the Government. The following shall be submitted in accordance with Section 01330 SUBMITTAL PROCEDURES:

SD-02 Shop Drawings

Formwork; G AED

Drawings showing details of formwork, including dimensions of fiber voids, joints, supports, studding and shoring, and sequence of form and shoring removal.

SD-03 Product Data

Design

Design analysis and calculations for form design and methodology used in the design.

Form Materials

Manufacturer's data including literature describing form materials, accessories, and form releasing agents.

Form Releasing Agents

Manufacturer's recommendation on method and rate of application of form releasing agents.

1.3 DESIGN

Formwork shall be designed in accordance with methodology of ACI 347R for anticipated loads, lateral pressures, and stresses. Forms shall be capable of producing a surface which meets the requirements of the class of finish specified in Section 03300 CAST-IN-PLACE STRUCTURAL CONCRETE. Forms shall

be capable of withstanding the pressures resulting from placement and vibration of concrete.

PART 2 PRODUCTS

2.1 FORM MATERIALS

2.1.1 Forms

Forms for finished surfaces, except where concrete is placed against earth, shall be wood or steel or other approved concrete form material.

2.1.2 Form Releasing Agents

Form releasing agents shall be commercial formulations that will not bond with, stain or adversely affect concrete surfaces. Agents shall not impair subsequent treatment of concrete surfaces depending upon bond or adhesion nor impede the wetting of surfaces to be cured with water or curing compounds.

PART 3 EXECUTION

3.1 INSTALLATION

3.1.1 Formwork

Forms shall be mortar tight, properly aligned and adequately supported to produce concrete surfaces meeting the surface requirements specified in Section 03300 CAST-IN-PLACE STRUCTURAL CONCRETE and conforming to construction tolerance given in TABLE 1. Where forms for continuous surfaces are placed in successive units, the forms shall fit over the completed surface to obtain accurate alignment of the surface and to prevent leakage of mortar. Forms shall not be reused if there is any evidence of surface wear and tear or defects which would impair the quality of the surface. Surfaces of forms to be reused shall be cleaned of mortar from previous concreting and of all other foreign material before reuse. Form ties that are to be completely withdrawn shall be coated with a nonstaining bond breaker.

3.2 CHAMFERING

Except as otherwise shown, external corners that will be exposed shall be chamfered, beveled, or rounded by moldings placed in the forms.

3.3 COATING

The coating shall be used as recommended in the manufacturer's printed or written instructions. Forms for finished surfaces may be wet with water in lieu of coating immediately before placing concrete, except that in cold weather with probable freezing temperatures, coating shall be mandatory. Surplus coating on form surfaces and coating on reinforcing steel and construction joints shall be removed before placing concrete.

3.4 REMOVAL OF FORMS

Forms shall be removed preventing injury to the concrete and ensuring the complete safety of the structure. Formwork for columns, walls, side of beams and other parts not supporting the weight of concrete may be removed when the concrete has attained sufficient strength to resist damage from

the removal operation but not before at least 24 hours has elapsed since concrete placement. Supporting forms and shores shall not be removed from beams, floors and walls until the structural units are strong enough to carry their own weight and any other construction or natural loads. Supporting forms or shores shall not be removed before the concrete strength has reached 70 percent of design strength, as determined by field cured cylinders or other approved methods. This strength shall be demonstrated by job-cured test specimens, and by a structural analysis considering the proposed loads in relation to these test strengths and the strength of forming and shoring system. The job-cured test specimens for form removal purposes shall be provided in numbers as directed and shall be in addition to those required for concrete quality control. The specimens shall be removed from molds at the age of 24 hours and shall receive, insofar as possible, the same curing and protection as the structures they represent.

TABLE 1

TOLERANCES FOR FORMED SURFACES

1.	Variations from the plumb:	In any 3 m of length -------- 6 mm
	a. In the lines and surfaces of walls	Maximum for entire length -- 25 mm
2.	Variation from the level or from the grades indicated on the drawings:	In any 3 m of length ------- 6 mm In any bay or in any 6 m of length ---------- 10 mm
	a. In beam soffits	Maximum for entire length - 20 mm
	b. In exposed lintels, sills, bond beams, and other conspicuous lines	In any bay or in any 6 m of length ---------- 6 mm Maximum for entire length - 13 mm
3.	Variation of the linear building lines from established position in plan	In any 6 m ---------- 13 mm Maximum ---------- 25 mm
4.	Variation in cross-sectional dimensions of beams and walls	Minus ---------- 6 mm Plus ---------- 13 mm
5.	Footings:	
	a. Variation of dimensions in plan	Minus ---------- 13 mm Plus ---------- 50 mm when formed or plus 75 mm when placed against unformed excavation
	b. Misplacement of eccentricity	2 percent of the footing width in the direction of misplacement but not more than --------- 50 mm

TABLE 1

TOLERANCES FOR FORMED SURFACES

c.	Reduction in thickness	Minus ---------- 5 percent of specified thickness

-- End of Section --

SECTION 03200

CONCRETE REINFORCEMENT

PART 1 GENERAL

1.1 REFERENCES

The publications listed below form a part of this specification to the extent referenced. The publications are referred to in the text by basic designation only.

ACI INTERNATIONAL (ACI)

ACI 318M/318RM	(2002) Building Code Requirements for Structural Concrete and Commentary (Metric)

ASTM INTERNATIONAL (ASTM)

ASTM A 82	(2001) Steel Wire, Plain, for Concrete Reinforcement
ASTM A 615/A 615M	(2001b) Deformed and Plain Billet-Steel Bars for Concrete Reinforcement
ASTM A 706/A 706M	(1998) Low-Alloy Steel Deformed and Plain Bars for Concrete Reinforcement

1.2 SUBMITTALS

Government approval is required for submittals with a "G" designation; submittals not having a "G" designation are for information only. The following shall be submitted in accordance with Section 01335 SUBMITTAL PROCEDURES for design built project:

SD-07 Mill Certificate

Reinforcing Steel; G

1.3 DELIVERY AND STORAGE

Reinforcement and accessories shall be stored off the ground on platforms, skids, or other supports.

PART 2 PRODUCTS

2.1 REINFORCING STEEL

Reinforcing steel shall be deformed bars conforming to ASTM A 615/A 615M or ASTM A 706/A 706M, grade 60 sizes as indicated. Cold drawn wire used for spiral reinforcement shall conform to ASTM A 82.

2.2 WIRE TIES

Wire ties shall be 1.6 mm(16 gauge) or heavier black steel wire.

2.3 Welded Wire Fabric (WWF)

WWF shall conform to ASTM A185

PART 3 EXECUTION

3.1 REINFORCEMENT

Reinforcement shall be fabricated to shapes and dimensions shown and shall conform to the requirements of ACI 318M/318RM. Reinforcement shall be cold bent unless otherwise authorized. Bending may be accomplished in the field or at the mill. Bars shall not be bent after embedment in concrete. Safety caps shall be placed on all exposed ends of vertical concrete reinforcement bars that pose a danger to life safety. Wire tie ends shall face away from the forms.

3.1.1 Placement

Reinforcement shall be free from loose rust and scale, dirt, oil, or other deleterious coating that could reduce bond with the concrete. Reinforcement shall be placed in accordance with ACI 318M/318RM at locations shown plus or minus one bar diameter. Reinforcement shall not be continuous through expansion joints and shall be as indicated through construction or contraction joints. Concrete coverage shall be as indicated or as required by ACI 318M/318RM. If bars are moved more than one bar diameter to avoid interference with other reinforcement, conduits or embedded items, the resulting arrangement of bars, including additional bars required to meet structural requirements, shall be approved before concrete is placed.

3.1.2 Splicing

Splices of reinforcement shall conform to ACI 318M/318RM and shall be made only as required or indicated. Splicing shall be by lapping or by mechanical connection; except that lap splices shall not be used for bars larger than No. 11 (35 mm)unless otherwise indicated. Lapped bars shall be placed in contact and securely tied or spaced transversely apart to permit the embedment of the entire surface of each bar in concrete. Lapped bars shall not be spaced farther apart than one-fifth the required length of lap or 150 mm. Mechanical butt splices shall be in accordance with the recommendation of the manufacturer of the mechanical splicing device. Butt splices shall develop 125 percent of the specified minimum yield tensile strength of the spliced bars or of the smaller bar in transition splices. Bars shall be flame dried before butt splicing. Adequate jigs and clamps or other devices shall be provided to support, align, and hold the longitudinal centerline of the bars to be butt spliced in a straight line.

3.2 WELDED-WIRE FABRIC PLACEMENT

Welded-wire fabric shall be placed as indicated on Drawings. Fabric placed in slabs on grade shall be continuous between expansion, construction, and contraction joints. Fabric placement at joints shall be as indicated. Lap splices shall be made in such a way that the overlapped area equals the distance between the outermost crosswires plus 50 mm. Laps shall be staggered to avoid continuous laps in either direction. Fabric shall be

wired or clipped together at laps at intervals not to exceed 1.2 m. Fabric shall be positioned by the use of supports.

3.3 DOWEL INSTALLATION

Dowels shall be installed in slabs on grade at locations indicated and at right angles to joint being doweled. Dowels shall be accurately positioned and aligned parallel to the finished concrete surface before concrete placement. Dowels shall be rigidly supported during concrete placement. One end of dowels shall be coated with a bond breaker.

-- End of Section --

SECTION 03256

HYDROPHILIC RUBBER WATERSTOPS

PART 1 GENERAL

1.1 REFERENCES

The publications listed below form a part of this specification to the extent referenced. The publications are referred to within the text by the basic designation only.

ASTM INTERNATIONAL (ASTM)

ASTM D 1149	(1999) Standard Test Method for Rubber Deterioration-Surface Ozone Cracking in a Chamber
ASTM D 1203	(2003) Standard Test Methods for Volatile Loss From Plastics Using Activated Carbon Methods
ASTM D 2240	(2004) Standard Test Method for Rubber Property - Durometer Hardness
ASTM D 638	(2002) Tensile Properties of Plastics

1.2 SUBMITTALS

Government approval is required for submittals with a "G" designation; submittals not having a "G" designation are for information only. When used, a designation following the "G" designation identifies the office that will review the submittal for the Government. The following shall be submitted in accordance with Section 01330 SUBMITTAL PROCEDURES:

SD-03 Product Data; G

Hydrophilic Rubber Waterstop

Manufacturer's printed data and literature for all specified materials and locations where materials are to be used.

1.3 QUALITY ASSURANCE

A. Reject and replace waterstops which have become wet or exhibit swelling prior to concrete placement.

B. Require a manufacturer's representative to visit the job site before any waterstops are installed to demonstrate the correct installation and splicing procedures.

C. Position waterstops in joints as indicated.

D. Provide waterstops in maximum practical lengths to minimize joints.

E. Use adhesives manufactured by or recommended by the waterstop manufacturer for attachment of the waterstop to concrete.

F. Waterstops shall be positioned to provide a minimum of 75 mm concrete cover.

1.4 DELIVERY, STORAGE, AND HANDLING

A. Transport, handle and deliver materials to the job site in the manufacturer's sealed bags, unopened containers or banded pallets.

B. Store materials off the ground on a platform or skids and protect with covers from snow, rain and ground splatter.

C. Store hydrophilic waterstops under cover in a dry cool location, out of direct sunlight. Waterstops shall be maintained in a dry condition until concrete placement.

PART 2 PRODUCTS

2.1 HYDROPHILIC RUBBER WATERSTOPS

A. Provide hydrophilic rubber gasket waterstops fabricated of non-vulcanized rubber, chloroprene rubber, urethane polymers, vinylester polymers or combinations of these materials.

B. Waterstops shall be of solid construction and 10 mm x 20 mm minimum in cross section.

C. Provide waterstop as recommended by manufacturer for specific installation.

D. Waterstops containing bentonite shall not be used.

E. Provide hydrophilic gasket waterstops which meet or exceed the criteria in Table 03256-1.

Table 03256-1

Property	Test Method	Limit
Ultimate Elongation	ASTM D 638	70% minimum
Tensile Strength	ASTM D 638	170 kPa minimum
Ozone Resistance	ASTM D 1149	No Failure
Volatile Loss	ASTM D 1203	0.50% maximum
Hardness, Shore A	ASTM D 2240	20 to 60

PART 3 EXECUTION

3.1 INSTALLATION

A. Provide hydrophilic rubber gasket waterstops where specifically indicated.

B. Center waterstops in joints unless otherwise indicated.

C. Consolidate concrete during placement in vicinity of waterstop without damaging or dislodging waterstop.

D. Clean joint surface of dirt, dust, debris and laitence immediately before applying waterstop and remove standing water.

E. Protect waterstops from moisture until concrete is placed. Waterstops which exhibit swelling prior to concrete placement shall be removed and replaced at the contractor's expense.

3.2 HYDROPHILIC GASKET WATERSTOPS

A. Install hydrophilic gasket waterstops in continuous lengths to minimize joints. Provide waterstop in one continuous length insofar as practicable. Butt ends at joints of waterstop or overlap a minimum of 50 mm per manufacturer's instructions.

B. Seal joints in hydrophilic gasket waterstops with a hydrophilic rubber paste compound as recommended by the manufacturer.

C. Do not bend hydrophilic gasket waterstop. Cut square and butt joints at corners.

D. Waterstop shall be in continuous contact with the concrete surface.

E. Attach hydrophilic gasket waterstop to concrete surface by one of the following methods:

1. Fix hydrophilic gasket waterstop to concrete surface with continuous bead of hydrophilic rubber paste or adhesive. Paste or adhesive shall be provided by or as recommended by the waterstop manufacturer.

2. Fix hydrophilic gasket waterstop to concrete surface with masonry or concrete nails or powder activated fasteners at a maximum 300 mm spacing.

F. Provide one fastener one inch from the top and a second fastener four inches from the top of vertical hydrophilic gasket waterstops regardless of which fastening method is used.

G. Do not compress or otherwise deform hydrophilic gasket waterstop when fastening to concrete.

H. Do not wrap hydrophilic gasket waterstops around pipes less than the minimum diameter recommended in the manufacturer's printed instructions.

-- End of Section --

SECTION 03300

CAST-IN-PLACE STRUCTURAL CONCRETE

PART 1 GENERAL

1.1 REFERENCES

The publications listed below form a part of this specification to the extent referenced. The publications are referred to in the text by basic designation only.

ACI INTERNATIONAL (ACI)

ACI 117/117R	(1990; Errata) Standard Tolerances for Concrete Construction and Materials
ACI 305R	(1999) Hot Weather Concreting

ASTM INTERNATIONAL (ASTM)

ASTM C 143/C 143M	(2000) Slump of Hydraulic Cement Concrete
ASTM C 150	(2002) Portland Cement
ASTM C 171	(1997a) Sheet Materials for Curing Concrete
ASTM C 172	(1999) Sampling Freshly Mixed Concrete
ASTM C 231	(1997el) Air Content of Freshly Mixed Concrete by the Pressure Method
ASTM C 260	(2000) Air-Entraining Admixtures for Concrete
ASTM C 31/C 31M	(2000e1) Making and Curing Concrete Test Specimens in the Field
ASTM C 39/C 39M	(2001) Compressive Strength of Cylindrical Concrete Specimens
ASTM C 42/C 42M	(1999) Obtaining and Testing Drilled Cores and Sawed Beams of Concrete
ASTM C 494/C 494M	(1999ae1) Chemical Admixtures for Concrete
ASTM C 94/C 94M	(2000e2) Ready-Mixed Concrete
ASTM E 96	(2000e1) Water Vapor Transmission of Materials

U.S. ARMY CORPS OF ENGINEERS (USACE)

COE CRD-C 400	(1963) Requirements for Water for Use in Mixing or Curing Concrete

COE CRD-C 521	(1981) Standard Test Method for Frequency and Amplitude of Vibrators for Concrete
COE CRD-C 540	(1971; R 1981) Standard Specification for Nonbituminous Inserts for Contraction Joints in Portland Cement Concrete Airfield Pavements, Sawable Type
COE CRD-C 572	(1974) Corps of Engineers Specifications for Polyvinylchloride Waterstop
COE CRD-C 94	(1995) Surface Retarders

1.2 SUBMITTALS

Government approval is required for submittals with a "G" designation; submittals not having a "G" designation are for information only. When used, a designation following the "G" designation identifies the office that will review the submittal for the Government. The following shall be submitted in accordance with Section 01330 SUBMITTAL PROCEDURES:

SD-03 Product Data

Mixture Proportions; G AED

The results of trial mixture design studies along with a statement giving the maximum nominal coarse aggregate size and the proportions of ingredients that will be used in the manufacture of each strength or class of concrete, at least 14 days prior to commencing concrete placing operations. Aggregate weights shall be based on the saturated surface dry condition. The statement shall be accompanied by test results from an approved independent commercial testing laboratory, showing that mixture design studies have been made with materials proposed for the project and that the proportions selected will produce concrete of the qualities indicated. No substitutions shall be made in the materials used in the mixture design studies without additional tests to show that the quality of the concrete is satisfactory.

SD-04 Samples

Surface Retarder

Sample of surface retarder material with manufacturer's instructions for application in conjunction with air-water cutting.

SD-06 Test Reports

Testing and Inspection for Contractor Quality Control; G AED

Certified copies of laboratory test reports, including mill tests and all other test data, for portland cement, blended cement, pozzolan, ground granulated blast furnace slag, silica fume, aggregate, admixtures, and curing compound proposed for use on this project.

SD-07 Certificates

Qualifications

Written documentation for Contractor Quality Control personnel.

1.3 GENERAL REQUIREMENTS

1.3.1 Tolerances

Except as otherwise specified herein, tolerances for concrete batching, mixture properties, and construction as well as definition of terms and application practices shall be in accordance with ACI 117/117R. Level and grade tolerance measurements of slabs shall be made as soon as possible after finishing; when forms or shoring are used, the measurements shall be made prior to removal.

1.3.1.1 Floors

For the purpose of this Section the following terminology correlation between ACI 117/117R and this Section shall apply:

Floor Profile Quality Classification From ACI 117/117R	This Section
Conventional Bullfloated	Same
Conventional Straightedged	Same

Levelness tolerance shall not apply where design requires floors to be sloped to drains or sloped for other reasons.

1.3.2 Strength Requirements and w/c Ratio

1.3.2.1 Strength Requirements

Specified compressive strength (f'c) shall be as follows:

COMPRESSIVE STRENGTH	STRUCTURE OR PORTION OF STRUCTURE
280 kg per cm sq. at 28 days	ALL CONCRETE WORK

a. Evaluation of Concrete Compressive Strength. Compressive strength specimens (152 by 305 mm cylinders) shall be fabricated by the Contractor and laboratory cured in accordance with ASTM C 31/C 31M and tested in accordance with ASTM C 39/C 39M. The strength of the concrete will be considered satisfactory so long as the average of all sets of three consecutive test results equals or exceeds the specified compressive strength f'c and no individual test result falls below the specified strength f'c by more than 3.5 MPa. A "test" is defined as the average of two companion cylinders, or if only one cylinder is tested, the results of the single cylinder test. Additional analysis or testing, including taking cores and/or load tests may be required at the Contractor's expense when the strength of the concrete in the structure is considered potentially deficient.

b. Investigation of Low-Strength Compressive Test Results. When any strength test of standard-cured test cylinders falls below the specified strength requirement by more than 2.11 MPa or if tests of field-cured cylinders indicate deficiencies in protection and curing, steps shall be taken to assure that the load-carrying

capacity of the structure is not jeopardized. When the strength of concrete in place is considered potentially deficient, cores shall be obtained and tested in accordance with ASTM C 42/C 42M. At least three representative cores shall be taken from each member or area of concrete in place that is considered potentially deficient. The location of cores will be determined by the Government to least impair the strength of the structure. Concrete in the area represented by the core testing will be considered adequate if the average strength of the cores is equal to at least 85 percent of the specified strength requirement and if no single core is less than 75 percent of the specified strength requirement. Non-destructive tests (tests other than test cylinders or cores) shall not be used as a basis for acceptance or rejection. The Contractor shall perform the coring and repair the holes. Cores will be tested by the Government .

1.3.2.2 Water-Cement Ratio

Maximum water-cement ratio (w/c) for normal weight concrete shall be as follows:

WATER-CEMENT RATIO, BY WEIGHT	STRUCTURE OR PORTION OF STRUCTURE
0.45	ALL STRUCTURES

1.3.3 Air Entrainment

Normal weight concrete shall be air entrained to contain between 3 and 5 percent total air.Specified air content shall be attained at point of placement into the forms. Air content for normal weight concrete shall be determined in accordance with ASTM C 231.

1.3.4 Slump

Slump of the concrete, as delivered to the point of placement into the forms, shall be within the following limits. Slump shall be determined in accordance with ASTM C 143/C 143M .

Structural Element	Slump Minimum	Slump Maximum
Foundation walls, substructure walls, footings, slabs	25 mm	100 mm

1.3.5 Concrete Temperature

The temperature of the concrete as delivered shall not exceed 32 degrees C. When the ambient temperature during placing is 5 degrees C or less, or is expected to be at any time within 6 hours after placing, the temperature of the concrete as delivered shall be between 12 and 25 degrees C.

1.3.6 Size of Coarse Aggregate

The largest feasible nominal maximum size aggregate (NMSA) specified in paragraph AGGREGATES shall be used in each placement. However, nominal maximum size of aggregate shall not exceed any of the following: three-fourths of the minimum cover for reinforcing bars, three-fourths of

the minimum clear spacing between reinforcing bars, one-fifth of the narrowest dimension between sides of forms, or one-third of the thickness of slabs or toppings.

1.4 MIXTURE PROPORTIONS

Concrete shall be composed of portland cement, other cementitious and pozzolanic materials as specified, aggregates, water and admixtures as specified. Mixture shall follow approved proportions at all times.

1.5 STORAGE OF MATERIALS

Cement and other cementitious materials shall be stored in weathertight buildings, bins, or silos which will exclude moisture and contaminants and keep each material completely separated. Aggregate stockpiles shall be arranged and used in a manner to avoid excessive segregation and to prevent contamination with other materials or with other sizes of aggregates. Aggregate shall not be stored directly on ground unless a sacrificial layer is left undisturbed. Reinforcing bars and accessories shall be stored above the ground on platforms, skids or other supports. Other materials shall be stored in such a manner as to avoid contamination and deterioration. Admixtures which have been in storage at the project site for longer than 6 months or which have been subjected to freezing shall not be used unless retested and proven to meet the specified requirements. Materials shall be capable of being accurately identified after bundles or containers are opened.

1.6 GOVERNMENT ASSURANCE INSPECTION AND TESTING

Day-to day inspection and testing shall be the responsibility of the Contractor Quality Control (CQC) staff. However, representatives of the Government can and will inspect construction as considered appropriate and will monitor operations of the Contractor's CQC staff. Government inspection or testing will not relieve the Contractor of any of his CQC responsibilities.

1.6.1 Materials

The Government will sample and test aggregates, cementitious materials, other materials, and concrete to determine compliance with the specifications as considered appropriate. The Contractor shall provide facilities and labor as may be necessary for procurement of representative test samples. Samples of aggregates will be obtained at the point of batching. Other materials will be sampled from storage at the jobsite or from other locations as considered appropriate. Samples may be placed in storage for later testing when appropriate.

1.6.2 Fresh Concrete

Fresh concrete will be sampled as delivered in accordance with ASTM C 172 and tested in accordance with these specifications, as considered necessary.

1.6.3 Hardened Concrete

Tests on hardened concrete will be performed by the Government when such tests are considered necessary.

1.6.4 Inspection

Concrete operations may be tested and inspected by the Government as the project progresses. Failure to detect defective work or material will not prevent rejection later when a defect is discovered nor will it obligate the Government for final acceptance.

PART 2 PRODUCTS

2.1 MANUFACTURER

Basis of Design: As indicated in this section.

Acceptable Manufacturers:

1. Basis of Design manufacturers.
2. Equivalent product complying with requirements of this specification for proposed variant products.

2.2 CEMENTITIOUS MATERIALS

Cementitious Materials shall be portland cement, portland-pozzolan cement, or portland cement in combination with pozzolan and shall conform to appropriate specifications listed below. Use of cementitious materials in concrete which will have surfaces exposed in the completed structure shall be restricted so there is no change in color, source, or type of cementitious material.

2.2.1 Portland Cement

Hydraulic cement produced by pulverizing clinker consisting primarily of hydraulic calcium silicates, typically containing forms of calcium sulfate as interground addition and shall conform with ASTM C 150, Type I (one) cement.

2.3 AGGREGATES

Locally available, and acceptable to Government.

2.4 CHEMICAL ADMIXTURES

2.4.1 Air-Entraining Admixture

ASTM C 260 and shall consistently entrain the air content in the specified ranges under field conditions.

2.4.2 Water-Reducing or Retarding Admixture

ASTM C 494/C 494M Type A, B, or D, except that the 6-month and 1-year compressive and flexural strength tests are waived.

2.4.3 Surface Retarder

COE CRD-C 94.

2.5 CURING MATERIALS

2.5.1 Impervious-Sheet

Impervious-sheet materials shall conform to ASTM C 171 type optional.

2.5.2 Burlap and Cotton Mat

Burlap and cotton mat may be used for curing .

2.6 WATER

Fresh, clean, potable mixing water or nonpotable water which meets the requirements of COE CRD-C 400 shall be used.

2.7 VAPOR BARRIER

Vapor barrier shall be polyethylene sheeting with a minimum thickness of 0.15 mm (6 mils) or other equivalent material having a vapor permeance rating not exceeding 30 nanograms per Pascal per second per square meter (0.5 perms) as determined in accordance with ASTM E 96.

2.8 JOINT MATERIALS

2.8.1 Waterstops

Intersection and change of direction waterstops shall be shop fabricated. See Section 03256 HYDROPHOLIC RUBBER WATERSTOPS.

2.8.2 Control Joints in Slabs

Sawable type control joint inserts shall conform to COE CRD-C 540. Nonsawable joint inserts shall have sufficient stiffness to permit placement in plastic concrete without undue deviation from a straight line and shall conform to the physical requirements of COE CRD-C 540, with the exception of Section 3.4 "Resistance to Sawing". Plastic inserts shall be polyvinyl chloride conforming to the materials requirements of COE CRD-C 572.

2.9 ACCESSORIES

2.9.1 Expansion Board

For expansion board indicated at concrete joints on Drawings, provide asphalt impregnated fiberboard and sealing compound. Install as indicated on Drawings.

Basis of Design: Bitucell, fiber board sheet, by FOSROC.

2.9.2 Joint Backing

Closed-cell polyethylene cord, refer to Section 07900

2.9.3 Joint Sealant

Refer to Section 07900.

2.10 EPOXY ANCHOR ADHESIVES

An epoxy-resin grout shall be used to bond steel anchors to concrete, and

shall be a moisture insensitive, low creep, structural adhesive. The epoxy shall conform to manufacturer's recommendations for the application. The epoxy adhesive shall be conditioned, proportioned, mixed, and applied in accordance with the manufacturer's recommendations, except as otherwise specified herein or indicated on the drawings.

PART 3 EXECUTION

3.1 PREPARATION FOR PLACING

Before commencing concrete placement, the following shall be performed. Surfaces to receive concrete shall be clean and free from frost, ice, mud, and water. Forms shall be in place, cleaned, coated, and adequately supported, in accordance with Section 03100 STRUCTURAL CONCRETE FORMWORK. Reinforcing steel shall be in place, cleaned, tied, and adequately supported, in accordance with Section 03200 CONCRETE REINFORCEMENT. Transporting and conveying equipment shall be in-place, ready for use, clean, and free of hardened concrete and foreign material. Equipment for consolidating concrete shall be at the placing site and in proper working order. Equipment and material for curing and for protecting concrete from weather or mechanical damage shall be at the placing site, in proper working condition and in sufficient amount for the entire placement. When hot, windy conditions during concreting appear probable, equipment and material shall be at the placing site to provide windbreaks, shading, fogging, or other action to prevent plastic shrinkage cracking or other damaging drying of the concrete.

3.1.1 Foundations

3.1.1.1 Concrete on Earth Foundations

Earth (subgrade, base, or subbase courses) surfaces upon which concrete is to be placed shall be clean, damp, and free from debris, frost, ice, and standing or running water. Prior to placement of concrete, the foundation shall be well drained and shall be satisfactorily graded and uniformly compacted.

3.1.1.2 Excavated Surfaces in Lieu of Forms

Concrete for footings and walls may be placed directly against the soil provided the earth or rock has been carefully trimmed, is uniform and stable, and meets the compaction requirements of Section 02315 EXCAVATION, FILLING, AND BACKFILLING FOR BUILDINGS. The concrete shall be placed without becoming contaminated by loose material, and the outline of the concrete shall be within the specified tolerances.

3.1.2 Vapor Barrier

Vapor barrier shall be provided beneath the interior on-grade concrete floor slabs. The greatest widths and lengths practicable shall be used to eliminate joints wherever possible. Joints shall be lapped a minimum of 300 mm. Torn, punctured, or damaged vapor barrier material shall be removed and new vapor barrier shall be provided prior to placing concrete. For minor repairs, patches may be made using laps of at least 300 mm. Lapped joints shall be sealed and edges patched with pressure-sensitive adhesive or tape not less than 50 mm wide and compatible with the membrane. Vapor barrier shall be placed directly on underlying subgrade, base course, or capillary water barrier, unless it consists of crushed material or large granular material which could puncture the vapor barrier.

In this case, the surface shall be choked with a light layer of sand, as approved, before placing the vapor barrier. A 50 mm layer of compacted, clean concrete sand (fine aggregate) shall be placed on top of the vapor barrier before placing concrete. Concrete placement shall be controlled so as to prevent damage to the vapor barrier, or any covering sand.

Capillary water barrier shall consist of #057 stone porous fill, thickness as indicated on Drawings, 10 cm minimum.

3.2 CONCRETE PRODUCTION

3.2.1 Batching, Mixing, and Transporting Concrete

3.2.1.1 Stationary Mixers

Concrete plant mixers shall be drum-type mixers of tilting, nontilting, horizontal-shaft, or vertical-shaft type, or shall be pug mill type and shall be provided with an acceptable device to lock the discharge mechanism until the required mixing time has elapsed. The mixing time and uniformity shall conform to all the requirements in ASTM C 94/C 94M applicable to central-mixed concrete.

3.3 PLACING CONCRETE

Mixed concrete shall be discharged within 1-1/2 hours, whichever comes first after the introduction of the mixing water to the cement and aggregates. When the concrete temperature exceeds 30 degrees C, the time shall be reduced to 45 minutes. Concrete shall be placed within 15 minutes after it has been discharged from the transporting unit. Concrete shall be handled from mixer or transporting unit to forms in a continuous manner until the approved unit of operation is completed. Adequate scaffolding, ramps and walkways shall be provided so that personnel and equipment are not supported by in-place reinforcement. Placing will not be permitted when the sun, heat, wind, or limitations of facilities furnished by the Contractor prevent proper consolidation, finishing and curing. Sufficient placing capacity shall be provided so that concrete can be kept free of cold joints.

3.3.1 Depositing Concrete

Concrete shall be deposited as close as possible to its final position in the forms, and there shall be no vertical drop greater than 1.5 meters except where suitable equipment is provided to prevent segregation and where specifically authorized. Depositing of the concrete shall be so regulated that it will be effectively consolidated in horizontal layers not more than 300 mm thick, except that all slabs shall be placed in a single layer. Concrete to receive other construction shall be screeded to the proper level. Concrete shall be deposited continuously in one layer or in layers so that fresh concrete is deposited on in-place concrete that is still plastic. Fresh concrete shall not be deposited on concrete that has hardened sufficiently to cause formation of seams or planes of weakness within the section. Concrete that has surface dried, partially hardened, or contains foreign material shall not be used. When temporary spreaders are used in the forms, the spreaders shall be removed as their service becomes unnecessary. Concrete shall not be placed in slabs over columns and walls until concrete in columns and walls has been in-place at least two hours or until the concrete begins to lose its plasticity. Concrete for beams, girders, brackets, column capitals, haunches, and drop panels shall be placed at the same time as concrete for adjoining slabs.

3.3.2 Consolidation

Immediately after placing, each layer of concrete shall be consolidated by internal vibrators, except for slabs 100 mm thick or less. The vibrators shall at all times be adequate in effectiveness and number to properly consolidate the concrete; a spare vibrator shall be kept at the jobsite during all concrete placing operations. The vibrators shall have a frequency of not less than 10,000 vibrations per minute, an amplitude of at least 0.6 mm, and the head diameter shall be appropriate for the structural member and the concrete mixture being placed. Vibrators shall be inserted vertically at uniform spacing over the area of placement. The distance between insertions shall be approximately 1-1/2 times the radius of action of the vibrator so that the area being vibrated will overlap the adjacent just-vibrated area by a reasonable amount. The vibrator shall penetrate rapidly to the bottom of the layer and at least 150 mm into the preceding layer if there is such. Vibrator shall be held stationary until the concrete is consolidated and then vertically withdrawn slowly while operating. Form vibrators shall not be used unless specifically approved and unless forms are constructed to withstand their use. Vibrators shall not be used to move concrete within the forms. Slabs 100 mm and less in thickness shall be consolidated by properly designed vibrating screeds or other approved technique. Excessive vibration of concrete resulting in segration or flotation of coarse aggregate shall be prevented. Frequency and amplitude of vibrators shall be determined in accordance with COE CRD-C 521. Grate tampers ("jitterbugs") shall not be used.

3.3.3 Cold Weather Requirements

Special protection measures, approved by the Government, shall be used if freezing temperatures are anticipated before the expiration of the specified curing period. The ambient temperature of the air where concrete is to be placed and the temperature of surfaces to receive concrete shall be not less than 5 degrees C. The temperature of the concrete when placed shall be not less than 10 degrees C nor more than 25 degrees C. Heating of the mixing water or aggregates will be required to regulate the concrete placing temperature. Materials entering the mixer shall be free from ice, snow, or frozen lumps. Salt, chemicals or other materials shall not be incorporated in the concrete to prevent freezing. Upon written approval, an accelerating admixture conforming to ASTM C 494/C 494M, Type C or E may be used, provided it contains no calcium chloride. Calcium chloride shall not be used.

3.3.4 Hot Weather Requirements

When the ambient temperature during concrete placing is expected to exceed 30 degrees C, the concrete shall be placed and finished with procedures previously submitted and as specified herein. The concrete temperature at time of delivery to the forms shall not exceed the temperature shown in the table below. Cooling of the mixing water or aggregates or placing concrete in the cooler part of the day may be required to obtain an adequate placing temperature. A retarder may be used, as approved, to facilitate placing and finishing. Steel forms and reinforcements shall be cooled as approved prior to concrete placement when steel temperatures are greater than 49 degrees C. Conveying and placing equipment shall be cooled if necessary to maintain proper concrete-placing temperature.

Maximum Allowable Concrete Placing Temperature

Relative Humidity, Percent, During Time of Concrete Placement	Maximum Allowable Concrete Temperature Degrees
Greater than 60	33 C
40-60	30 C
Less than 40	27 C

3.3.5 Prevention of Plastic Shrinkage Cracking

During hot weather with low humidity, and particularly with appreciable wind, as well as interior placements when space heaters produce low humidity, the Contractor shall be alert to the tendency for plastic shrinkage cracks to develop and shall institute measures to prevent this. Particular care shall be taken if plastic shrinkage cracking is potentially imminent and especially if it has developed during a previous placement. Periods of high potential for plastic shrinkage cracking can be anticipated by use of Fig. 2.1.5 of ACI 305R. In addition the concrete placement shall be further protected by erecting shades and windbreaks and by applying fog sprays of water, sprinkling, ponding or wet covering. Plastic shrinkage cracks that occur shall be filled by injection of epoxy resin as directed, after the concrete hardens. Plastic shrinkage cracks shall never be troweled over or filled with slurry.

3.4 JOINTS

Joints shall be located and constructed as indicated or approved. Joints not indicated on the drawings shall be located and constructed to minimize the impact on the strength of the structure. All reinforcement shall be continued across joints; except that reinforcement or other fixed metal items shall not be continuous through expansion joints, or through construction or control joints in slabs on grade. Reinforcement shall be 50 mm clear from each joint. Except where otherwise indicated, construction joints between interior slabs on grade and vertical surfaces shall consist of 1.5 kg per square meter asphalt-saturated felt, extending for the full depth of the slab. The perimeters of the slabs shall be free of fins, rough edges, spalling, or other unsightly appearance. Reservoir for sealant for construction and control joints in slabs shall be formed to the dimensions shown on the drawings by removing snap-out joint-forming inserts, by sawing sawable inserts, or by sawing to widen the top portion of sawed joints. Joints to be sealed shall be cleaned and sealed as indicated and in accordance with Section 07900 JOINT SEALING.

3.4.1 Control Joints in Slabs on Grade

Control joints shall be located and detailed as shown on the drawings. Control Joints shall be produced by forming a weakened plane in the concrete slab by sawing a continuous slot with a concrete saw. Regardless of method used to produce the weakened plane, it shall be 1/4 the depth of the slab thickness and between 3 and 5 mm wide. For saw-cut joints, cutting shall be timed properly with the set of the concrete. Cutting shall be started as soon as the concrete has hardened sufficiently to prevent ravelling of the edges of the saw cut. Cutting shall be completed before shrinkage stresses become sufficient to produce cracking. Reservoir

for joint sealant shall be formed as previously specified.

3.5 FINISHING UNFORMED SURFACES

The finish of all unformed surfaces shall meet the requirements of paragraph Tolerances in PART 1, when tested as specified herein.

3.5.1 Floated Finish

Slabs to receive more than a rough slab finish shall next be given a wood float finish. Areas to receive terrazzo tile shall be given only a float finish. The screeding shall be followed immediately by darbying or bull floating before bleeding water is present, to bring the surface to a true, even plane. Then, after the concrete has stiffened so that it will withstand a man's weight without imprint of more than 6 mm and the water sheen has disappeared, it shall be floated to a true and even plane free of ridges. Floating shall be performed by use of suitable hand floats or power driven equipment. Sufficient pressure shall be used on the floats to bring a film of moisture to the surface. Hand floats shall be made of wood, magnesium, or aluminum. Concrete that exhibits stickiness shall be floated with a magnesium float. Care shall be taken to prevent over-finishing or incorporating water into the surface.

3.5.2 Troweled Finish

Areas to receive sealer or enamel paint coating shall be given a trowel finish. After floating is complete and after the surface moisture has disappeared, unformed surfaces shall be steel-troweled to a smooth, even, dense finish, free from blemishes including trowel marks. In lieu of hand finishing, an approved power finishing machine may be used in accordance with the directions of the machine manufacturer. Additional trowelings shall be performed, either by hand or machine until the surface has been troweled 2 times, with waiting period between each. Care shall be taken to prevent blistering and if such occurs, troweling shall immediately be stopped and operations and surfaces corrected. A final hard steel troweling shall be done by hand, with the trowel tipped, and using hard pressure, when the surface is at a point that the trowel will produce a ringing sound. The finished surface shall be thoroughly consolidated and shall be essentially free of trowel marks and be uniform in texture and appearance. The concrete mixture used for troweled finished areas shall be adjusted, if necessary, in order to provide sufficient fines (cementitious material and fine sand) to finish properly.

3.6 EXTERIOR SLAB AND RELATED ITEMS

3.6.1 Pavements

Pavements shall be constructed where shown on the drawings. After forms are set and underlying material prepared as specified, the concrete shall be placed uniformly throughout the area and thoroughly vibrated. As soon as placed and vibrated, the concrete shall be struck off and screeded to the crown and cross section and to such elevation above grade that when consolidated and finished, the surface of the pavement will be at the required elevation. The entire surface shall be tamped with the strike off, or consolidated with a vibrating screed, and this operation continued until the required compaction and reduction of internal and surface voids are accomplished. Care shall be taken to prevent bringing excess paste to the surface. Immediately following the final consolidation of the surface, the pavement shall be floated longitudinally from bridges resting on the

side forms and spanning but not touching the concrete. If necessary, additional concrete shall be placed and screeded, and the float operated until a satisfactory surface has been produced. The floating operation shall be advanced not more than half the length of the float and then continued over the new and previously floated surfaces. After finishing is completed but while the concrete is still plastic, minor irregularities and score marks in the pavement surface shall be eliminated by means of long-handled cutting straightedges. Straightedges shall be 3.75 m in length and shall be operated from the sides of the pavement and from bridges. A straightedge operated from the side of the pavement shall be equipped with a handle 1 m longer than one-half the width of the pavement. The surface shall then be tested for trueness with a 3.75 m straightedge held in successive positions parallel and at right angles to the center line of the pavement, and the whole area covered as necessary to detect variations. The straightedge shall be advanced along the pavement in successive stages of not more than one-half the length of the straightedge. Depressions shall be immediately filled with freshly mixed concrete, struck off, consolidated, and refinished. Projections above the required elevation shall also be struck off and refinished. The straightedge testing and finishing shall continue until the entire surface of the concrete is true. Before the surface sheen has disappeared and well before the concrete becomes nonplastic, the surface of the pavement shall be given a nonslip sandy surface texture by use of a burlap drag. A strip of clean, wet burlap from 1.0 to 1.5 m wide and 0.7 m longer than the pavement width shall be carefully pulled across the surface. Edges and joints shall be rounded with an edger having a radius of 3 mm. Curing shall be as specified.

3.6.2 Curbs and Gutters

Concrete shall be formed, placed, and finished by hand using a properly shaped "mule" or constructed using a slipform machine specially designed for this work. Control joints shall be cut 75 mm deep with a jointing tool after the surface has been finished. Expansion joints (12 mm wide) shall be provided at 35 m maximum spacing unless otherwise indicated. Exposed surfaces shall be finished using a stiff bristled brush.

3.6.3 Pits and Trenches

Pits and trenches shall be constructed as indicated on the drawings. Bottoms and walls shall be placed monolithically or waterstops and keys, shall be provided as approved.

3.7 CURING AND PROTECTION

3.7.1 General

Concrete shall be cured by an approved method for the period of time given below:

All concrete	7 days

Immediately after placement, concrete shall be protected from premature drying, extremes in temperatures, rapid temperature change, mechanical injury and damage from rain and flowing water for the duration of the curing period. Air and forms in contact with concrete shall be maintained at a temperature above 10 degrees C for the first 3 days and at a temperature above 0 degrees C for the remainder of the specified curing period. Exhaust fumes from combustion heating units shall be vented to the

outside of the enclosure, and heaters and ducts shall be placed and directed so as not to cause areas of overheating and drying of concrete surfaces or to create fire hazards. Materials and equipment needed for adequate curing and protection shall be available and at the site prior to placing concrete. No fire or excessive heat, including welding, shall be permitted near or in direct contact with the concrete at any time. Moist curing shall be provided for any areas to receive floor hardener, any paint or other applied coating, or to which other concrete is to be bonded. Except for plastic coated burlap, impervious sheeting alone shall not be used for curing.

3.7.2 Moist Curing

Concrete to be moist-cured shall be maintained continuously wet for the entire curing period, commencing immediately after finishing. If water or curing materials used stain or discolor concrete surfaces which are to be permanently exposed, the concrete surfaces shall be cleaned as approved. When wooden forms are left in place during curing, they shall be kept wet at all times. If steel forms are used in hot weather, nonsupporting vertical forms shall be broken loose from the concrete soon after the concrete hardens and curing water continually applied in this void. If the forms are removed before the end of the curing period, curing shall be carried out as on unformed surfaces, using suitable materials. Surfaces shall be cured by ponding, by continuous sprinkling, by continuously saturated burlap or cotton mats, or by continuously saturated plastic coated burlap. Burlap and mats shall be clean and free from any contamination and shall be completely saturated before being placed on the concrete. The Contractor shall have an approved work system to ensure that moist curing is continuous 24 hours per day.

3.7.3 Ponding or Immersion

Concrete shall be continually immersed throughout the curing period. Water shall not be more than 10 degrees C less than the temperature of the concrete.

3.7.4 Cold Weather Curing and Protection

When the daily ambient low temperature is less than 0 degrees C the temperature of the concrete shall be maintained above 5 degrees C for the first seven days after placing. During the period of protection removal, the air temperature adjacent to the concrete surfaces shall be controlled so that concrete near the surface will not be subjected to a temperature differential of more than 13 degrees C as determined by suitable temperature measuring devices furnished by the Contractor, as required, and installed adjacent to the concrete surface and 50 mm inside the surface of the concrete. The installation of the thermometers shall be made by the Contractor as directed.

3.8 SETTING BASE PLATES AND BEARING PLATES

After being properly positioned, column base plates, bearing plates for beams and similar structural members, and machinery and equipment base plates shall be set to the proper line and elevation with damp-pack bedding mortar, except where nonshrink grout is indicated. The thickness of the mortar or grout shall be approximately 1/24 the width of the plate, but not less than 20 mm. Concrete and metal surfaces in contact with grout shall be clean and free of oil and grease, and concrete surfaces in contact with grout shall be damp and free of laitance when grout is placed.

3.8.1 Damp-Pack Bedding Mortar

Damp-pack bedding mortar shall consist of 1 part cement and 2-1/2 parts fine aggregate having water content such that a mass of mortar tightly squeezed in the hand will retain its shape but will crumble when disturbed. The space between the top of the concrete and bottom of the bearing plate or base shall be packed with the bedding mortar by tamping or ramming with a bar or rod until it is completely filled.

3.8.2 Nonshrink Grout

Nonshrink grout shall be a ready-mixed material requiring only the addition of water. Water content shall be the minimum that will provide a flowable mixture and completely fill the space to be grouted without segregation, bleeding, or reduction of strength.

3.8.2.1 Mixing and Placing of Nonshrink Grout

Mixing and placing shall be in conformance with the material manufacturer's instructions and as specified therein. Ingredients shall be thoroughly dry-mixed before adding water. After adding water, the batch shall be mixed for 3 minutes. Batches shall be of size to allow continuous placement of freshly mixed grout. Grout not used within 30 minutes after mixing shall be discarded. The space between the top of the concrete or machinery-bearing surface and the plate shall be filled solid with the grout. Forms shall be of wood or other equally suitable material for completely retaining the grout on all sides and on top and shall be removed after the grout has set. The placed grout shall be carefully worked by rodding or other means to eliminate voids; however, overworking and breakdown of the initial set shall be avoided. Grout shall not be retempered or subjected to vibration from any source. Where clearances are unusually small, placement shall be under pressure with a grout pump. Temperature of the grout, and of surfaces receiving the grout, shall be maintained at 18 to 30 degrees C until after setting.

3.8.2.2 Treatment of Exposed Surfaces

For metal-oxidizing nonshrink grout, exposed surfaces shall be cut back 25 mm and immediately covered with a parge coat of mortar consisting of 1 part portland cement and 2-1/2 parts fine aggregate by weight, with sufficient water to make a plastic mixture. The parge coat shall have a smooth finish. For other mortars or grouts, exposed surfaces shall have a smooth-dense finish and be left untreated. Curing shall comply with paragraph CURING AND PROTECTION.

3.9 TESTING AND INSPECTION FOR CONTRACTOR QUALITY CONTROL

The Contractor shall perform the inspection and tests described below and, based upon the results of these inspections and tests, and shall take the action required. When, in the opinion of the Government, the concreting operation is out of control, concrete placement shall cease and the operation shall be corrected. Materials may be subjected to check testing by the Government from samples obtained at the manufacturer, at transfer points, or at the project site. The Government will inspect the equipment, and test procedures prior to start of concreting operations and subsequently thereafter for conformance.

3.9.1 Concrete Mixture

a. Air Content Testing. Air content tests shall be made when test specimens are fabricated. In addition, at least two tests for air content shall be made on randomly selected batches of each separate concrete mixture produced during each 8-hour period of concrete production. Additional tests shall be made when excessive variation in workability is reported by the placing foreman or Government's inspector. Tests shall be made in accordance with ASTM C 231 for normal weight concrete. Test results shall be recorded and shall at all times be readily available to the Government. Copies of the test results shall be kept in the field by testing crews and recorded as tests are made. When a single test result reaches either the upper or lower action limit, a second test shall immediately be made. The results of the two tests shall be averaged and this average used as the record air content of the batch and for determining need for any remedial action. Samples for air content may be taken at the mixer, however, the Contractor is responsible for delivering the concrete to the placement site at the stipulated air content. If the Contractor's materials or transportation methods cause air content loss between the mixer and the placement, correlation samples shall be taken at the placement site as required by the Government, and the air content at the mixer controlled as directed.

b. Air Content Corrective Action. Whenever air content reaches either upper or lower action limits, an adjustment shall immediately be made in the amount of air-entraining admixture batched. As soon as practical after each adjustment, another test shall be made to verify the result of the adjustment. Whenever air content exceeds action limits, the air content shall be considered out of control and the concreting operation shall immediately be halted until the air content is under control. Additional air content tests shall be made when concreting is restarted.

c. Slump Testing. In addition to slump tests which shall be made when test specimens are fabricated, at least four slump tests shall be made on randomly selected batches in accordance with ASTM C 143/C 143M for each separate concrete mixture produced during each 8-hour or less period of concrete production each day. Also, additional tests shall be made when excessive variation in workability is reported by the placing foreman or Government's inspector. Test results shall be recorded and shall at all times be readily available to the Government. Copies of the test results shall be kept in the field by testing crews and recorded as tests are made. When a single slump test reaches or goes beyond either the upper or lower action limit, a second test shall immediately be made. The results of the two tests shall be averaged and this average used as the record slump of the batch, and for determining need for any remedial action. Samples for slump shall be taken at the mixer. However, the Contractor is responsible for delivering the concrete to the placement site at the stipulated slump. If the Contractor's materials or transportation methods cause slump loss between the mixer and the placement, correlation samples shall be taken at the placement site as required by the Government, and the slump at the mixer controlled as directed.

d. Slump Corrective Action. Whenever slump reaches the upper action limit, an adjustment shall immediately be made in the batch weights of water and fine aggregate. The adjustments are to be made so that the total water content does not exceed that amount allowed by the maximum w/c ratio specified, based on aggregates which are in a saturated surface dry condition. When a single slump reaches the upper or lower action limit, no further concrete shall be delivered to the placing site until proper adjustments have been made. Immediately after each adjustment, another test shall be made to verify the correctness of the adjustment. Whenever two consecutive individual slump tests, made during a period when there was no adjustment of batch weights, produce slump at or above the upper action limit, the concreting operation shall immediately be halted, and the Contractor shall take appropriate steps to bring the slump under control. Additional slump tests shall be made as directed.

3.9.2 Inspection Before Placing

Foundations, construction joints, forms, and embedded items shall be inspected by the Contractor in sufficient time prior to each concrete placement in order to certify to the Government that they are ready to receive concrete. The results of each inspection shall be reported in writing.

3.9.3 Placing

The placing foreman shall supervise placing operations, shall determine that the correct quality of concrete or grout is placed in each location as specified and as directed by the Government, and shall be responsible for measuring and recording concrete temperatures and ambient temperature hourly during placing operations, weather conditions, time of placement, volume placed, and method of placement. The placing foreman shall not permit batching and placing to begin until it has been verified that an adequate number of vibrators in working order and with competent operators are available. Placing shall not be continued if any pile of concrete is inadequately consolidated. If any batch of concrete fails to meet the temperature requirements, immediate steps shall be taken to improve temperature controls.

3.9.4 Curing Inspection

a. Moist Curing Inspections. At least once each shift, and not less than twice per day on both work and non-work days, an inspection shall be made of all areas subject to moist curing. The surface moisture condition shall be noted and recorded.

b. Moist Curing Corrective Action. When a daily inspection report lists an area of inadequate curing, immediate corrective action shall be taken, and the required curing period for those areas shall be extended by 1 day.

e. Sheet Curing Inspection. At least once each shift and once per day on non-work days, an inspection shall be made of all areas being cured using impervious sheets. The condition of the covering and the tightness of the laps and tapes shall be noted and recorded.

f. Sheet Curing Corrective Action. When a daily inspection report lists any tears, holes, or laps or joints that are not completely closed, the tears and holes shall promptly be repaired or the sheets replaced, the joints closed, and the required curing period for those areas shall be extended by 1 day.

3.9.5 Cold-Weather Protection

At least once each shift and once per day on non-work days, an inspection shall be made of all areas subject to cold-weather protection. Any deficiencies shall be noted, corrected, and reported.

3.9.6 Reports

All results of tests or inspections conducted shall be reported informally as they are completed and in writing daily. A weekly report shall be prepared for the updating of control charts covering the entire period from the start of the construction season through the current week. During periods of cold-weather protection, reports of pertinent temperatures shall be made daily. These requirements do not relieve the Contractor of the obligation to report certain failures immediately as required in preceding paragraphs. Such reports of failures and the action taken shall be confirmed in writing in the routine reports. The Government has the right to examine all contractor quality control records.

-- End of Section --

SECTION 03351

PENETRATING LIQUID CONCRETE FLOOR TREATMENT

PART 1 GENERAL

1.1 MATERIAL AUTHENTICATION DATA INCLUDED IN DESIGN ANALYSIS

Government approval is required for submittals with a "G" designation; submittals not having a "G" designation are for information only. When used, a designation following the "G" designation identifies the office that will review the submittal for the Government. The following shall be submitted in accordance with Section 01330 SUBMITTAL PROCEDURES:

SD-03 Product Data; G

Liquid Floor Treatments

Manufacturers descriptive data, catalog cuts, and application instructions

1.2 DELIVERY, STORAGE, AND HANDLING

Store materials in a dry area at a temperature between 4 and 40 degrees C. Provide adequate ventilation and keep away from ignition sources.

PART 2 PRODUCTS

2.1 FLOOR AND SLAB TREATMENTS

2.1.1 Liquid Floor Treatments

Clear, penetrating, chemically reactive, waterborne solution of inorganic silicate or siliconate materials and proprietary components; odorless; colorless; that penetrates, hardens, and densifies concrete surfaces.

PART 3 EXECUTION

3.1 EXAMINATION

Examine areas and conditions, with Applicator present, for compliance with requirements for existing coatings and treatments, including curing compounds, and other conditions affecting performance of work.

3.1.1 Suitability and Compatibility

Verify suitability of substrates, including compatibility with existing finishes, coatings, or treatments.

3.1.2 Unsatisfactory Conditions

Begin application only after unsatisfactory conditions have been corrected and surfaces are dry.

3.1.3 Acceptance

Application indicates acceptance of surfaces and conditions.

3.2 PREPARATION AND APPLICATION

Prepare, apply, and finish penetrating liquid floor treatment according to manufacturer's written instructions.

3.2.1 Preparation

Remove curing compounds, sealers, oil, dirt, laitance, and other contaminants and complete surface repairs.

3.2.2 Substrate Conditions

Do not apply to concrete that is less than 28 days old.

3.2.3 Application

Apply liquid until surface is saturated, scrubbing into surface until a gel forms; rewet; and repeat brooming or scrubbing. Rinse with water; remove excess material until surface is dry. Apply a second coat in a similar manner if surface is rough or porous.

3.2.4 Sealing Coat

Uniformly apply a continuous sealing coat of liquid according to manufacturer's written instructions, immediately prior to substantial completion.

-- End of Section --

SECTION 04200

MASONRY

PART 1 GENERAL

1.1 REFERENCES

The publications listed below form a part of this specification to the extent referenced. The publications are referred to within the text by basic designation only.

ACI INTERNATIONAL (ACI)

ACI 530	(1999) Building Code Requirements for Masonry Structures
ACI 530.1	(1999) Specifications for Masonry Structures and Related Commentaries
ACI SP-66	(1994) ACI Detailing Manual

AMERICAN SOCIETY OF CIVIL ENGINEERS (ASCE)

ASCE 5	(1999) Building Code Requirements for Masonry Structures

ASTM INTERNATIONAL (ASTM)

ASTM A 615/A 615M	(2001b) Deformed and Plain Billet-Steel Bars for Concrete Reinforcement
ASTM C 90	(2002) Loadbearing Concrete Masonry Units
ASTM C 270	(2001a) Mortar for Unit Masonry
ASTM C 476	(2001) Grout for Masonry
ASTM C 494/C 494M	(1999ae1) Chemical Admixtures for Concrete
ASTM C 780	(2000) Preconstruction and Construction Evaluation of Mortars for Plain and Reinforced Unit Masonry
ASTM C 1019	(2000b) Sampling and Testing Grout

1.2 SUBMITTALS

Government approval is required for submittals with a "G" designation; submittals not having a "G" designation are for information only. When used, a designation following the "G" designation identifies the office that will review the submittal for the Government. Submit the following in accordance with Section 01330 SUBMITTAL PROCEDURES:

SD-02 Shop Drawings

Structural Masonry; G AED

Drawings including plans, elevations, and details of wall reinforcement; details of reinforcing bars at corners and wall intersections; offsets; tops, bottoms, and ends of walls; control and expansion joints; lintels; and wall openings. Bar splice locations shall be shown. If the Contractor opts to furnish inch-pound CMU products, drawings showing elevation of walls exposed to view and indicating the location of all cut CMU products shall be submitted for approval. Bent bars shall be identified on a bending diagram and shall be referenced and located on the drawings. Wall dimensions, bar clearances, and wall openings greater than one masonry unit in area shall be shown. No approval will be given to the shop drawings until the Contractor certifies that all openings, including those for mechanical and electrical service, are shown. If, during construction, additional masonry openings are required, the approved shop drawings shall be resubmitted with the additional openings shown along with the proposed changes. Location of these additional openings shall be clearly highlighted. The minimum scale for wall elevations shall be 1 to 50. Reinforcement bending details shall conform to the requirements of ACI SP-66.

SD-03 Product Data

Local/Regional Materials; (LEED)

Documentation indicating distance between manufacturing facility and the project site. Indicate distance of raw material origin from the project site. Indicate relative dollar value of local/regional materials to total dollar value of products included in project.

Environmental Data
Concrete Masonry Units (CMU); G AED
Cement; G AED
Insulation; G AED
Flashing; G AED
Water-Repellant Admixture; G AED

Manufacturer's descriptive data. Documentation indicating percentage of post-industrial and post-consumer recycled content per unit of product. Indicate relative dollar value of recycled content products to total dollar value of products included in project.

Cold Weather Installation; G AED

Cold weather construction procedures.

SD-04 Samples

Concrete Masonry Units (CMU); G AED

Color samples of three stretcher units and one unit for each type of special shape. Units shall show the full range of color and texture. Submit sample of colored mortar with applicable masonry unit.

Anchors, Ties, and Bar Positioners; G AED

Two of each type used.

Expansion-Joint Materials; G AED

One piece of each type used.

Joint Reinforcement; G AED

One piece of each type used, including corner and wall intersection pieces, showing at least two cross wires.

SD-05 Design Data

Pre-mixed Mortar; G AED
Unit Strength Method; G AED

Pre-mixed mortar composition. Calculations and certifications of masonry unit and mortar strength.

SD-06 Test Reports

Field Testing of Mortar; G AED
Field Testing of Grout; G AED
Masonry Cement; G AED
Fire-rated CMU; G AED

Test reports from an approved independent laboratory. Test reports on a previously tested material shall be certified as the same as that proposed for use in this project.

SD-07 Certificates

Concrete Masonry Units (CMU)
Control Joint Keys
Anchors, Ties, and Bar Positioners
Expansion-Joint Materials
Joint Reinforcement
Reinforcing Steel Bars and Rods
Masonry Cement
Precast Concrete Items

Certificates of compliance stating that the materials meet the specified requirements.

Insulation

Certificate attesting that the polyurethane or polyisocyanurate insulation furnished for the project contains recovered material, and showing an estimated percent of such recovered material.

Contamination

SD-08 Manufacturer's Instructions

Masonry Cement; G AED

When masonry cement is used, submit the manufacturer's printed

instructions on proportions of water and aggregates and on mixing to obtain the type of mortar required.

1.3 DELIVERY, HANDLING, AND STORAGE

Materials shall be delivered, handled, stored, and protected to avoid chipping, breakage, and contact with soil or contaminating material.

1.3.1 Masonry Units

Masonry units shall be covered or protected from inclement weather. Store Type II, masonry units at the site for a minimum of 28 days for air cured units, 10 days for atmospheric steam or water cured units, and 3 days for units cured with steam at a pressure of 800 to 1000 kPa and at a temperature of 180 to 185 degrees C for at least 5 hours. Protect moisture controlled Type I units from rain and ground water.

1.3.2 Cementitious Materials, Sand and Aggregates

Cementitious and other packaged materials shall be delivered in unopened containers, plainly marked and labeled with manufacturers' names and brands. Cementitious material shall be stored in dry, weathertight enclosures or be completely covered. Cement shall be handled in a manner that will prevent the inclusion of foreign materials and damage by water or dampness. Sand and aggregates shall be stored in a manner to prevent contamination or segregation.

1.4 STRUCTURAL MASONRY

1.4.1 Unit Strength Method

Compute compressive strength of masonry system "Unit Strength Method," ACI 530.1. Submit calculations and certifications of unit and mortar strength.

Masonry wall assembly shall have a compressive strength of not less than 140 kg/sq. cm.

1.4.2 Design Requirments

Design criteria shall include requirements of TM5-809-3(working stress). Seismic Load shall be based on the Internaional Building Code (2000)using spectral Ordinates SS=1.65g, S1=0.75g, Group I, Site Class D and Importance factor I=1.0

PART 2 PRODUCTS

2.1 CONCRETE MASONRY UNITS (CMU)

Cement shall have a low alkali content and be of one brand. Units shall be of modular dimensions and air, water, or steam cured. Surfaces of units which are to be plastered shall be sufficiently rough to provide bond; exposed surfaces of units shall be smooth and of uniform texture.

a. Hollow Load-Bearing Units: Meeting ACI 530, ASCE 5, or ASTM C 90, made with normal weight aggregate. Provide load-bearing units for exterior walls, foundation walls, load-bearing walls, and shear walls.

2.2 PRECAST CONCRETE ITEMS

2.2.1 Splash Blocks

Splash blocks shall be as detailed. Reinforcement shall be the manufacturer's standard.

2.3 MORTAR FOR STRUCTURAL MASONRY

ASTM C 270, Type S. Compressive Strength 130 kg/sq. cm minimum. Use ASTM C 150 Type I or II portland cement. Do not use admixtures containing chlorides. When structural reinforcement is incorporated, maximum air-content shall be 12 percent in cement-lime mortar mortar.

2.4 GROUT AND READY-MIXED GROUT

Grout shall conform to ASTM C 476 coarse. Cement used in grout shall have a low alkali content. Grout slump shall be between 200 and 250 mm. Minimum grout strength shall be 14 MPa in 28 days, as tested by ASTM C 1019. Grout shall be used subject to the limitations of Table III. Proportions shall not be changed and materials with different physical or chemical characteristics shall not be used in grout for the work unless additional evidence is furnished that the grout meets the specified requirements.

2.4.1 Admixtures for Grout

In cold weather, a non-chloride based accelerating admixture may be used subject to approval; accelerating admixture shall be non-corrosive, shall contain less than 0.2 percent chlorides, and shall conform to ASTM C 494/C 494M, Type C. In general, air-entrainment, anti-freeze or chloride admixtures shall not be used except as approved by the Government.

2.4.2 Grout Barriers

Grout barriers for vertical cores shall consist of fine mesh wire, fiberglass, or expanded metal.

2.5 Reinforcement

Reinforcing steel bar and rods shall conforn to ASTM A 615 grade 60. Joint reinforcement: Standard 9 gauge minimum, Ladder Type.

2.6 EXPANSION AND CONTROL JOINTS

General: Install control and expansion-joint materials in unit masonry as masonry progresses. Do not allow materials to span control and expansion joints without provision to allow for in-plane wall or partition movement.

Install expansion board as indicated at control joints on Drawings, provide asphalt impregnated fiberboard and sealing compound. Install as indicated on Drawings.

2.7 REINFORCING STEEL BARS AND RODS

Reinforcing steel bars and rods shall conform to ASTM A 615/A 615M, Grade 60.

2.8 FLASHING

Flashing shall be as specified in Section 07600 SHEET METALWORK, GENERAL. Material shall be one which is not adversely affected by dampproofing material.

PART 3 EXECUTION

3.1 PREPARATION

Prior to start of work, masonry inspector shall verify the applicable conditions as set forth in ACI 530.1 inspection. The Government will serve as inspector or will select a masonry inspector.

3.1.1 Hot Weather Installation

The following precautions shall be taken if masonry is erected when the ambient air temperature is more than 37 degrees C in the shade and the relative humidity is less than 50 percent or the ambient air temperature exceeds 32 degrees C and the wind velocity is more than 13 km/h . All masonry materials shall be shaded from direct sunlight; mortar beds shall be spread no more than 1.2 m ahead of masonry; masonry units shall be set within one minute of spreading mortar; and after erection, masonry shall be protected from direct exposure to wind and sun for 48 hours.

3.1.2 Cold Weather Installation

Before erecting masonry when ambient temperature or mean daily air temperature falls below 4 degrees C or temperature of masonry units is below 4 degrees C , a written statement of proposed cold weather construction procedures shall be submitted for approval. The following precautions shall be taken during all cold weather erection.

3.1.2.1 Protection

Ice or snow formed on the masonry bed shall be thawed by the application of heat. Heat shall be applied carefully until the top surface of the masonry is dry to the touch. Sections of masonry deemed frozen and damaged shall be removed before continuing construction of those sections.

a. Air Temperature 4 to 0 degrees C. Sand or mixing water shall be heated to produce mortar temperatures between 4 and 49 degrees C.

b. Air Temperature 0 to minus 4 degrees C . Sand and mixing water shall be heated to produce mortar temperatures between 4 and 49 degrees C. Temperature of mortar on boards shall be maintained above freezing.

c. Air Temperature minus 4 to minus 7 degrees C. Sand and mixing water shall be heated to provide mortar temperatures between 4 and 49 degrees C. Temperature of mortar on boards shall be maintained above freezing. Sources of heat shall be used on both sides of walls under construction. Windbreaks shall be employed when wind is in excess of 24 km/hour .

d. Air Temperature minus 7 degrees C and below. Sand and mixing water shall be heated to provide mortar temperatures between 4 and 49 degrees C. Enclosure and auxiliary heat shall be provided to maintain air temperature above 0 degrees C. Temperature of units

when laid shall not be less than minus 7 degrees C.

3.1.2.2 Completed Masonry and Masonry Not Being Worked On

a. Mean daily air temperature 4 to 0 degrees C . Masonry shall be protected from rain or snow for 24 hours by covering with weather-resistive membrane.

b. Mean daily air temperature 0 to minus 4 degrees C . Masonry shall be completely covered with weather-resistant membrane for 24 hours.

c. Mean Daily Air Temperature minus 4 to minus 7 degrees C . Masonry shall be completely covered with insulating blankets or equally protected for 24 hours.

3.1.3 Stains

Protect exposed surfaces from mortar and other stains. When mortar joints are tooled, remove mortar from exposed surfaces with fiber brushes and wooden paddles. Protect base of walls from splash stains by covering adjacent ground with sand, sawdust, or polyethylene.

3.1.4 Loads

Do not apply uniform loads for at least 12 hours or concentrated loads for at least 72 hours after masonry is constructed. Provide temporary bracing as required.

3.1.5 Surfaces

Surfaces on which masonry is to be placed shall be cleaned of laitance, dust, dirt, oil, organic matter, or other foreign materials and shall be slightly roughened to provide a surface texture with a depth of at least 3 mm . Sandblasting shall be used, if necessary, to remove laitance from pores and to expose the aggregate.

3.2 LAYING MASONRY UNITS

Coordinate masonry work with the work of other trades to accommodate built-in items and to avoid cutting and patching. Masonry units shall be laid in running bond pattern. Facing courses shall be level with back-up courses, unless the use of adjustable ties has been approved in which case the tolerances shall be plus or minus 13 mm . Each unit shall be adjusted to its final position while mortar is still soft and plastic. Units that have been disturbed after the mortar has stiffened shall be removed, cleaned, and relaid with fresh mortar. Air spaces, cavities, chases, expansion joints, and spaces to be grouted shall be kept free from mortar and other debris. Units used in exposed masonry surfaces shall be selected from those having the least amount of chipped edges or other imperfections detracting from the appearance of the finished work. Vertical joints shall be kept plumb. Units being laid and surfaces to receive units shall be free of water film and frost. Solid units shall be laid in a nonfurrowed full bed of mortar. Units shall be shoved into place so that the vertical joints are tight. Vertical joints of block and the vertical face shells of concrete masonry units, except where indicated at control, expansion, and isolation joints, shall be completely filled with mortar. Mortar will be permitted to protrude up to 13 mm into the space or cells to be grouted. Means shall be provided to prevent mortar from dropping into the space below.

3.2.1 Reinforced Concrete Masonry Units Walls

Where vertical reinforcement occurs, fill cores solid with grout. Lay units in such a manner as to preserve the unobstructed vertical continuity of cores to be filled. Embed the adjacent webs in mortar to prevent leakage of grout. Remove mortar fins protruding from joints before placing grout. Minimum clear dimensions of vertical cores shall be 50 by 75 mm. Position reinforcing accurately as indicated before placing grout. As masonry work progresses, secure vertical reinforcing in place at vertical intervals not to exceed 160 bar diameters. Use puddling rod or vibrator to consolidate the grout. Minimum clear distance between masonry and vertical reinforcement shall be not less than 12 mm. Unless indicated or specified otherwise, form splices by lapping bars not less than 40 bar diameters and wire tying them together.

3.2.2 Concrete Masonry Units

Units in piers, pilasters, columns, starting courses on footings, solid foundation walls, lintels, and beams, and where cells are to be filled with grout shall be full bedded in mortar under both face shells and webs. Other units shall be full bedded under both face shells. Head joints shall be filled solidly with mortar for a distance in from the face of the unit not less than the thickness of the face shell. Jamb units shall be of the shapes and sizes to conform with wall units. Solid units may be incorporated in the masonry work where necessary to fill out at corners, gable slopes, and elsewhere as approved.

3.2.3 Tolerances

Masonry shall be laid plumb, true to line, with courses level. Bond pattern shall be kept plumb throughout. Corners shall be square unless noted otherwise. Except for walls constructed of prefaced concrete masonry units, masonry shall be laid within the following tolerances (plus or minus unless otherwise noted):

TABLE II

TOLERANCES

Variation from the plumb in the lines and surfaces of columns, walls and arises	
In adjacent masonry units	3 mm
In 3 m	6 mm
In 6 m	10 mm
In 12 m or more	13 mm
Variations from the plumb for external corners, expansion joints, and other conspicuous lines	
In 6 m	6 mm
In 12 m or more	13 mm
Variations from the level for exposed lintels, sills, parapets, horizontal grooves, and other conspicuous lines	

TOLERANCES

In 6 m	6 mm
In 12 m or more	13 mm
Variation from level for bed joints and top surfaces of bearing walls	
In 3 m	6 mm
In 12 m or more	13 mm
Variations from horizontal lines	
In 3 m	6 mm
In 6 m	10 mm
In 12 m or more	13 mm
Variations in cross sectional dimensions of columns and in thickness of walls	
Minus	6 mm
Plus	13 mm

3.2.4 Cutting and Fitting

Full units of the proper size shall be used wherever possible, in lieu of cut units. Cutting and fitting, including that required to accommodate the work of others, shall be done by masonry mechanics using power masonry saws. Concrete masonry units may be wet or dry cut. Wet cut units, before being placed in the work, shall be dried to the same surface-dry appearance as uncut units being laid in the wall. Cut edges shall be clean, true and sharp. Openings in the masonry shall be made carefully so that wall plates, cover plates or escutcheons required by the installation will completely conceal the openings and will have bottoms parallel with the masonry bed joints.

Do not cut masonry unit face shells, grout, and mortar joints, and reinforced concrete bond beams in the field to facilitate placement of electrical conduit, J-boxes, plumbing or other non structural items. Building wall penetrations shall be carefully made so as not to reduce the structural integrity of the wall system in any way.

3.2.5 Jointing

Joints shall be tooled when the mortar is thumbprint hard. Horizontal joints shall be tooled last. Joints shall be brushed to remove all loose and excess mortar. Mortar joints shall be finished as follows:

3.2.5.1 Tooled Joints

Joints in exposed exterior and interior masonry surfaces shall be tooled slightly concave. Joints shall be tooled with a jointer slightly larger than the joint width so that complete contact is made along the edges of the unit. Tooling shall be performed so that the mortar is compressed and

the joint surface is sealed. Jointer of sufficient length shall be used to obtain a straight and true mortar joint.

3.2.5.2 Door and Window Frame Joints

On the exposed interior side of exterior frames, joints between frames and abutting masonry walls shall be raked to a depth of 10 mm . On the exterior side of exterior frames, joints between frames and abutting masonry walls shall be raked to a depth of 10 mm .

3.2.6 Joint Widths

Joint widths shall be as follows:

3.2.6.1 Concrete Masonry Units

Concrete masonry units shall have 9 mm joints.

3.2.7 Embedded Items

Spaces around built-in items shall be filled with mortar. Openings around flush-mount electrical outlet boxes in wet locations shall be pointed with mortar. Anchors, ties, wall plugs, accessories, flashing, pipe sleeves and other items required to be built-in shall be embedded as the masonry work progresses. Anchors, ties and joint reinforcement shall be fully embedded in the mortar. Cells receiving anchor bolts and cells of the first course below bearing plates shall be filled with grout.

3.2.8 Unfinished Work

Unfinished work shall be stepped back for joining with new work. Toothing may be resorted to only when specifically approved. Loose mortar shall be removed and the exposed joints shall be thoroughly cleaned before laying new work.

3.2.9 Masonry Wall Intersections

Each course shall be masonry bonded at corners and elsewhere as shown. Masonry walls shall be anchored or tied together at corners and intersections with bond beam reinforcement and prefabricated corner or tee pieces of joint reinforcement as shown.

3.2.10 Partitions

Partitions shall be continuous from floor to underside of floor or roof deck where shown. Openings in firewalls around joists or other structural members shall be filled as indicated or approved. Where suspended ceilings on both sides of partitions are indicated, the partitions other than those shown to be continuous may be stopped approximately 100 mm above the ceiling level. An isolation joint shall be placed in the intersection between partitions and structural or exterior walls as shown. Interior partitions having 100 mm nominal thick units shall be tied to intersecting partitions of 100 mm units. Cells within vertical plane of ties shall be filled solid with grout for full height of partition or solid masonry units may be used. Interior partitions having masonry walls over 100 mm thick shall be tied together with joint reinforcement. Partitions containing joint reinforcement shall be provided with prefabricated pieces at corners and intersections or partitions.

3.3 MORTAR

Mortar shall be mixed in a mechanically operated mortar mixer for at least 3 minutes, but not more than 5 minutes. Measurement of ingredients for mortar shall be by volume. Ingredients not in containers, such as sand, shall be accurately measured by the use of measuring boxes. Water shall be mixed with the dry ingredients in sufficient amount to provide a workable mixture which will adhere to the vertical surfaces of masonry units. Mortar that has stiffened because of loss of water through evaporation shall be retempered by adding water to restore the proper consistency and workability. Mortar that has reached its initial set or that has not been used within 2-1/2 hours after mixing shall be discarded.

3.4 REINFORCING STEEL

Reinforcement shall be cleaned of loose, flaky rust, scale, grease, mortar, grout, or other coating which might destroy or reduce its bond prior to placing grout. Bars with kinks or bends not shown on the drawings shall not be used. Reinforcement shall be placed prior to grouting. Unless otherwise indicated, vertical wall reinforcement shall extend to within 50 mm of tops of walls.

3.4.1 Positioning Bars

Vertical bars shall be accurately placed within the cells at the positions indicated on the drawings. A minimum clearance of 13 mm shall be maintained between the bars and masonry units. Minimum clearance between parallel bars shall be one diameter of the reinforcement. Vertical reinforcing may be held in place using bar positioners located near the ends of each bar and at intermediate intervals of not more than 192 diameters of the reinforcement. Column and pilaster ties shall be wired in position around the vertical steel. Ties shall be in contact with the vertical reinforcement and shall not be placed in horizontal bed joints.

3.4.2 Splices

Bars shall be lapped a minimum of 48 diameters of the reinforcement. Welded or mechanical connections shall develop at least 125 percent of the specified yield strength of the reinforcement.

3.5 PLACING GROUT

Cells containing reinforcing bars shall be filled with grout. Hollow masonry units in walls or partitions supporting plumbing, heating, or other mechanical fixtures, voids at door and window jambs, and other indicated spaces shall be filled solid with grout. Cells under lintel bearings on each side of openings shall be filled solid with grout for full height of openings. Lintels and bond beams shall be filled solid with grout. Units other than open end units may require grouting each course to preclude voids in the units. Grout not in place within 1-1/2 hours after water is first added to the batch shall be discarded. Sufficient time shall be allowed between grout lifts to preclude displacement or cracking of face shells of masonry units. If blowouts, flowouts, misalignment, or cracking of face shells should occur during construction, the wall shall be torn down and rebuilt.

3.5.1 Grout Holes and Cleanouts

3.5.1.1 Grout Holes

Grouting holes shall be provided in spandrel beams, and other in-place overhead construction. Holes shall be located over vertical reinforcing bars or as required to facilitate grout fill in bond beams. Additional openings spaced not more than 400 mm on centers shall be provided where grouting of all hollow unit masonry is indicated. Openings shall not be less than 100 mm in diameter or 75 by 100 mm in horizontal dimensions. Upon completion of grouting operations, grouting holes shall be plugged and finished to match surrounding surfaces.

3.5.1.2 Cleanouts for Hollow Unit Masonry Construction

Cleanout holes shall be provided at the bottom of every pour in cores containing vertical reinforcement when the height of the grout pour exceeds 1.5 m . Where all cells are to be grouted, cleanout courses shall be constructed using bond beam units in an inverted position to permit cleaning of all cells. Cleanout holes shall be provided at a maximum spacing of 800 mm where all cells are to be filled with grout. A new series of cleanouts shall be established if grouting operations are stopped for more than 4 hours. Cleanouts shall not be less than 75 by 100 mm openings cut from one face shell. Manufacturer's standard cutout units may be used at the Contractor's option. Cleanout holes shall not be closed until masonry work, reinforcement, and final cleaning of the grout spaces have been completed and inspected. For walls which will be exposed to view, cleanout holes shall be closed in an approved manner to match surrounding masonry.

3.5.2 Grouting Equipment

3.5.2.1 Grout Pumps

Pumping through aluminum tubes will not be permitted. Pumps shall be operated to produce a continuous stream of grout without air pockets, segregation, or contamination. Upon completion of each day's pumping, waste materials and debris shall be removed from the equipment, and disposed of outside the masonry.

3.5.3 Grout Placement

Masonry shall be laid to the top of a pour before placing grout. Grout shall not be placed in hollow unit masonry until mortar joints have set for at least 24 hours. Grout shall be placed using a hand bucket, concrete hopper, or grout pump to completely fill the grout spaces without segregation of the aggregates. The height of grout pours and type of grout used shall be limited by the dimensions of grout spaces as indicated in Table III. Low-lift grout methods may be used on pours up to and including 1.5 m in height. High-lift grout methods shall be used on pours exceeding 1.5 m in height.

3.5.3.1 Low-Lift Method

Grout shall be placed at a rate that will not cause displacement of the masonry due to hydrostatic pressure of the grout. Mortar protruding more than 13 mm into the grout space shall be removed before beginning the grouting operation. Grout pours 300 mm or less in height shall be consolidated by mechanical vibration or by puddling. Grout pours over 300

mm in height shall be consolidated by mechanical vibration and reconsolidated by mechanical vibration after initial water loss and settlement has occurred. Low-lift grout shall be used subject to the limitations of Table III.

3.5.3.2 High-Lift Method

Mortar droppings shall be cleaned from the bottom of the grout space and from reinforcing steel. Mortar protruding more than 6 mm into the grout space shall be removed by dislodging the projections with a rod or stick as the work progresses. Reinforcing, bolts, and embedded connections shall be rigidly held in position before grouting is started. CMU units shall not be pre-wetted. Grout, from the mixer to the point of deposit in the grout space shall be placed as rapidly as practical by pumping and placing methods which will prevent segregation of the mix and cause a minimum of grout splatter on reinforcing and masonry surfaces not being immediately encased in the grout lift. The individual lifts of grout shall be limited to 1.2 m in height. The first lift of grout shall be placed to a uniform height within the pour section and vibrated thoroughly to fill all voids. This first vibration shall follow immediately behind the pouring of the grout using an approved mechanical vibrator. After a waiting period sufficient to permit the grout to become plastic, but before it has taken any set, the succeeding lift shall be poured and vibrated 300 to 450 mm into the preceding lift. If the placing of the succeeding lift is going to be delayed beyond the period of workability of the preceding, each lift shall be reconsolidated by reworking with a second vibrator as soon as the grout has taken its settlement shrinkage. The waiting, pouring, and reconsolidation steps shall be repeated until the top of the pour is reached. The top lift shall be reconsolidated after the required waiting period. The high-lift grouting of any section of wall between vertical grout barriers shall be completed to the top of a pour in one working day unless a new series of cleanout holes is established and the resulting horizontal construction joint cleaned.

TABLE III

POUR HEIGHT AND TYPE OF GROUT FOR VARIOUS GROUT SPACE DIMENSIONS

Maximum Grout Pour Height (m) (4)	Grout Type	Grouting Procedure	Minimum Dimensions of the Total Clear Areas Within Grout Spaces and Cells (mm) (1,2) Multiwythe Masonry (3)	Hollow-unit Masonry
0.3	Fine	Low Lift	20	40 x 50
1.5	Fine	Low Lift	50	50 x 75
2.4	Fine	High Lift	50	50 x 75
3.6	Fine	High Lift	65	65 x 75
7.3	Fine	High Lift	75	75 x 75
0.3	Coarse	Low Lift	40	40 x 75
1.5	Coarse	Low Lift	50	65 x 75
2.4	Coarse	High Lift	50	75 x 75
3.6	Coarse	High Lift	65	75 x 75
7.3	Coarse	High Lift	75	75 x 100

Notes:

(1) The actual grout space or cell dimension must be larger than the

sum of the following items:
a) The required minimum dimensions of total clear areas given in the table above;
b) The width of any mortar projections within the space;
c) The horizontal projections of the diameters of the horizontal reinforcing bars within a cross section of the grout space or cell.

(2) The minimum dimensions of the total clear areas shall be made up of one or more open areas, with at least one area being 20 mm or greater in width.

(3) For grouting spaces between masonry wythes.

(4) Where only cells of hollow masonry units containing reinforcement are grouted, the maximum height of the pour shall not exceed the distance between horizontal bond beams.

3.6 POINTING AND CLEANING

After mortar joints have attained their initial set, but prior to hardening, mortar and grout daubs or splashings shall be completely removed from masonry-unit surfaces that will be exposed or painted. Before completion of the work, defects in joints of masonry to be exposed or painted shall be raked out as necessary, filled with mortar, and tooled to match existing joints. Immediately after grout work is completed, scum and stains which have percolated through the masonry work shall be removed using a high pressure stream of water and a stiff bristled brush. Masonry surfaces shall not be cleaned, other than removing excess surface mortar, until mortar in joints has hardened. Masonry surfaces shall be left clean, free of mortar daubs, dirt, stain, and discoloration, including scum from cleaning operations, and with tight mortar joints throughout. Metal tools and metal brushes shall not be used for cleaning.

3.6.1 Concrete Masonry Unit

Exposed concrete masonry unit shall be dry-brushed at the end of each day's work and after any required pointing, using stiff-fiber bristled brushes.

3.7 BEARING PLATES

Bearing plates for beams, joists, and similar structural members shall be set to the proper line and elevation with damp-pack bedding mortar, except where non-shrink grout is indicated. Bedding mortar and non-shrink grout shall be as specified in Section 03300 CAST-IN-PLACE STRUCTURAL CONCRETE.

3.8 PROTECTION

Top of unfinished walls shall be covered with nonstaining waterproof covering or membrane during adverse weather conditions (rain or snow) when work is not in progress. Covering shall extend a minimum of 600 mm down on each side of the wall and shall be held securely in place. Before starting or resuming, top surface of masonry in place shall be cleaned of loose mortar and foreign material.

3.9 MORTAR AND GROUT TESTS

3.9.1 Field Testing of Mortar

At least three specimens of mortar shall be taken each day. A layer of mortar 13 to 16 mm thick shall be spread on the masonry units and allowed to stand for one minute. The specimens shall then be prepared and tested for compressive strength in accordance with ASTM C 780.

3.9.2 Field Testing of Grout

Field sampling and testing of grout shall be in accordance with the applicable provisions of ASTM C 1019. A minimum of three specimens of grout per day shall be sampled and tested. Each specimen shall have a minimum ultimate compressive strength of 14.0 MPa at 28 days.

-- End of Section --

SECTION 05120

STRUCTURAL STEEL

PART 1 GENERAL

1.1 REFERENCES

The publications listed below form a part of this specification to the extent referenced. The publications are referred to in the text by the basic designation only.

AMERICAN INSTITUTE OF STEEL CONSTRUCTION (AISC)

AISC 316	(1989) ASD Manual of Steel Construction
AISC 317	(1992; Errata 1994) Connections
AISC 303	(2000) Code of Standard Practice for Steel Buildings and Bridges
AISC 348	(2003) Specification for Structural Joints Using ASTM A325 or A490 Bolts
AISC 335	(1989) Structural Steel Buildings Allowable Stress Design, and Plastic Design
AISC S340	(1992) Metric Properties of Structural Shapes with Dimensions According to ASTM A6M

ASTM INTERNATIONAL (ASTM)

ASTM A 36/A 36M	(2000a) Carbon Structural Steel
ASTM A 53	(1996) Pipe, Steel, Black and Hot-Dipped, Zinc-Coated Welded and Seamless
ASTM A 307	(2002) Carbon Steel Bolts and Studs, 60 000 PSI Tensile Strength
ASTM A 325M	(2002) Specification for High-Strength Bolts for Structural Steel Joints (Metric)
ASTM A 325	(2000) Structural Bolts, Steel, Heat Treated, 120/105 ksi Minimum Tensile Strength
ASTM A 490M	(2000) High-Strength Steel Bolts, Classes 10.9 and 10.9.3, for Structural Steel Joints (Metric)
ASTM A 563M	(2001) Specification for Carbon and Alloy Steel Nuts (Metric)
ASTM A 563	(1997) Carbon and Alloy Steel Nuts

ASTM C 827	(1995; R 1997) Change in Height at Early Ages of Cylindrical Specimens from Cementitious Mixtures
ASTM C 1107	(2002) Specification for Packaged Dry, Hydraulic-Cement Grout (Nonshrink)
ASTM F 436M	(2000) Hardened Steel Washers (Metric)
ASTM F 844	(2000) Washers, Steel, Plain (Flat), Unhardened for General Use

AMERICAN WELDING SOCIETY (AWS)

AWS D1.1/D1.1M	(1998) Structural Welding Code - Steel

1.2 SYSTEM DESCRIPTION

Provide the structural steel system, including shop primer, complete and ready for use. Structural steel systems including design, materials, installation, workmanship, fabrication, assembly, erection, inspection, quality control, and testing shall be provided in accordance with AISC 316 and AISC 317 except as modified in this contract.

1.3 MODIFICATIONS TO REFERENCES

In AISC 316, AISC 317, AISC 335, AISC 303, AISC 348, and AISC S340, except as modified in this section, shall be considered a part of AISC 316 and AISC 317 and is referred to in this section as AISC 316 and AISC 317.

1.4 SUBMITTALS

Government approval is required for submittals with a "G" designation; submittals not having a "G" designation are for information only. When used, a designation following the "G" designation identifies the office that will review the submittal for the Government. Submit the following in accordance with Section 01330 SUBMITTAL PROCEDURES:

SD-02 Shop Drawings

Erection Plan, including description of temporary supports; G AED

Fabrication drawings including description of connections; G AED

SD-03 Product Data

Shop primer

SD-06 Test Reports

Bolts, nuts, and washers

Supply the certified manufacturer's mill reports which clearly show the applicable ASTM mechanical and chemical requirements together with the actual test results for the supplied fasteners.

SD-07 Certificates

Steel

Bolts, nuts, and washers

Welding procedures and qualifications

PART 2 PRODUCTS

2.1 STEEL

2.1.1 Structural Steel

ASTM A 36/A 36M or general purpose structural grade, with minimum yield strength of 240 MPa. Provide A36, S.T. 37-2 steel, or equal.

2.1.2 Steel Pipe

ASTM A 53, Type E or S, Grade B; Electric resistance welded or seamless per DIN, BS, AISC, or EN standards, with minimum yield strength of 245 MPa.

2.2 BOLTS, NUTS, AND WASHERS

Provide the following unless indicated otherwise.

2.2.1 Structural Steel, Steel Pipe

2.2.1.1 Bolts

ASTM A 307, Grade A;Carbon steel bolts with minimum tensile strength of 414 MPa. ASTM A 325 and ASTM A 490M bolts shall be used where indicated on Drawings.

2.2.1.2 Nuts

ASTM A 563M, Grade A, heavy hex style, except nuts under M36 may be provided in hex style.

2.2.1.3 Washers

ASTM F 844 Plain, flat, unhardened steel washers for ASTM A 307 bolts, and ASTM F 436M washers for ASTM A 325M and ASTM A 490M bolts.

2.2.2 Foundation Anchorage

2.2.2.1 Bolts

ASTM A 307. Carbon steel bolts with minimum tensile strength of 414 MPa. The bolt heads of the supplied fasteners must be marked with the manufacturer's identification mark, the strength grade and type specified.

2.2.2.2 Nuts

ASTM A 563ASTM A 563, Grade A, hex style.

2.2.2.3 Washers

ASTM F 844.

2.3 STRUCTURAL STEEL ACCESSORIES

2.3.1 Welding Electrodes and Rods

AWS D1.1/D1.1M.

2.3.2 Nonshrink Grout

ASTM C 1107; Packaged, dry, non-shrink hydraulic cement, structurals grout, with no ASTM C 827 shrinkage. Grout shall be nonmetallic.

2.4 SHOP PRIMER

Provide red iron oxide primer.

2.5 FABRICATION

2.5.1 Shop Primer

2.5.1.1 Cleaning

Maintain steel surfaces free from rust, dirt, oil, grease, and other contaminants through final assembly.

2.5.1.2 Primer

Apply primer to a minimum dry film thickness of 0.05 mm. Repair damaged primed surfaces with an additional coat of primer.

PART 3 EXECUTION

3.1 ERECTION

3.1.1 STORAGE

Material shall be stored out of contact with the ground in such manner and location as will minimize deterioration.

3.2 CONNECTIONS

Except as modified in this section, connections not detailed shall be designed in accordance with AISC 335. Build connections into existing work. Do not tighten anchor bolts set in concrete with impact torque wrenches. Punch, subpunch and ream, or drill bolt holes. Bolts, nuts, and washers shall be clean of dirt and rust, and lubricated immediately prior to installation.

3.2.1 Common Grade Bolts

ASTM A 307; bolts shall be tightened to a "snug tight" fit. "Snug tight" is the tightness that exists when plies in a joint are in firm contact. If firm contact of joint plies cannot be obtained with a few impacts of an impact wrench, or the full effort of a man using a spud wrench, contact the Government for further instructions.

3.3 WELDING

AWS D1.1/D1.1M.

3.4 SHOP PRIMER REPAIR

Repair shop primer in accordance with the paint manufacturer's recommendation for surfaces damaged by handling, transporting, cutting, welding, or bolting.

3.4.1 Field Priming

Field priming of steel exposed to the weather, or located in building areas without HVAC for control of relative humidity. After erection, the field bolt heads and nuts, field welds, and any abrasions in the shop coat shall be cleaned and primed with paint of the same quality as that used for the shop coat.

3.5 FIELD QUALITY CONTROL

Perform field tests, and provide labor, equipment, and incidentals required for testing. The Government shall be notified in writing of defective welds, bolts, nuts, and washers within 7 working days of the date of weld inspection.

3.5.1 Welds

3.5.1.1 Visual Inspection

AWS D1.1/D1.1M. Furnish the services of AWS-certified welding inspectors for fabrication and erection inspection and testing and verification inspections. Welding inspectors shall visually inspect and mark welds, including fillet weld end returns.

-- End of Section --

SECTION 05500

MISCELLANEOUS METAL

PART 1 GENERAL

1.1 REFERENCES

The publications listed below form a part of this specification to the extent referenced. The publications are referred to in the text by basic designation only.

ASTM INTERNATIONAL (ASTM)

ASTM A 36/A 36M	(2000a) Carbon Structural Steel
ASTM A 500	(1999) Cold-Formed Welded and Seamless Carbon Steel Structural Tubing in Rounds and Shapes
ASTM A 53/A 53M	(2001) Pipe, Steel, Black and Hot-Dipped, Zinc-Coated, Welded and Seamless

AMERICAN SOCIETY OF CIVIL ENGINEERS (ASCE)

ASCE 7	(1998) Minimum Design Loads for Buildings and Other Structures

AMERICAN WELDING SOCIETY (AWS)

AWS D1.1/D1.1M	(1998) Structural Welding Code - Steel

NATIONAL ASSOCIATION OF ARCHITECTURAL METAL MANUFACTURERS (NAAMM)

NAAMM MBG 531	(1994) Metal Bar Grating Manual

1.2 GENERAL REQUIREMENTS

The Contractor shall verify all measurements and shall take all field measurements necessary before fabrication. Welding to or on structural steel shall be in accordance with AWS D1.1/D1.1M. Items specified to be galvanized, when practicable and not indicated otherwise, shall be hot-dip galvanized after fabrication. Exposed fastenings shall be compatible materials, shall generally match in color and finish, and shall harmonize with the material to which fastenings are applied. Materials and parts necessary to complete each item, even though such work is not definitely shown or specified, shall be included. Poor matching of holes for fasteners shall be cause for rejection. Fastenings shall be concealed where practicable. Thickness of metal and details of assembly and supports shall provide strength and stiffness. Joints exposed to the weather shall be formed to exclude water.

1.3 SUBMITTALS

Government approval is required for submittals with a "G" designation; submittals not having a "G" designation are for information only. When

used, a designation following the "G" designation identifies the office that will review the submittal for the Government. The following shall be submitted in accordance with Section 01330 SUBMITTAL PROCEDURES:

SD-02 Shop Drawings

Fabrication drawings of steel stairs; G AED

Handrails, installation drawings; G AED

Ladders, installation drawings; G AED

Submit fabrication drawings showing layout(s), connections to structural system, and anchoring details as specified in AISC 303.

Submit templates, erection and installation drawings indicating thickness, type, grade, class of metal, and dimensions. Show construction details, reinforcement, anchorage, and installation with relation to the building construction.

SD-03 Product Data

Access doors and panels

Cover plates and frames

Control-joint covers

Expansion joint covers

Handrails

Ladders

Steel stairs

Steel Stairs, circular

SD-04 Samples

Expansion joint covers

Control-joint covers

Samples shall be full size, taken from manufacturer's stock, and shall be complete as required for installation in the structure. Samples may be installed in the work, provided each sample is clearly identified and its location recorded.

1.4 DISSIMILAR MATERIALS

Where dissimilar metals are in contact, or where aluminum is in contact with concrete, mortar, masonry, wet or pressure-treated wood, or absorptive materials subject to wetting, the surfaces shall be protected with a coat of bituminous paint or asphalt varnish.

1.5 WORKMANSHIP

Miscellaneous metalwork shall be well formed to shape and size, with sharp

lines and angles and true curves. Drilling and punching shall produce clean true lines and surfaces. Welding shall be continuous along the entire area of contact except where tack welding is permitted. Exposed connections of work in place shall not be tack welded. Exposed welds shall be ground smooth. Exposed surfaces of work in place shall have a smooth finish, and unless otherwise approved, exposed riveting shall be flush. Where tight fits are required, joints shall be milled. Corner joints shall be coped or mitered, well formed, and in true alignment. Work shall be accurately set to established lines and elevations and securely fastened in place. Installation shall be in accordance with manufacturer's installation instructions and approved drawings, cuts, and details.

1.6 ANCHORAGE

Anchorage shall be provided where necessary for fastening miscellaneous metal items securely in place. Anchorage not otherwise specified or indicated shall include slotted inserts made to engage with the anchors, expansion shields, and powder-driven fasteners when approved for concrete; toggle bolts and through bolts for masonry; machine and carriage bolts for steel; and lag bolts and screws for wood.

1.6.1 Powder Driven Fasteners

Powder-Actuated Drive-Pin Fasteners: Powder-actuated-type, drive-pin attachments with pull-out and shear capacities appropriate for supported loads and building materials where used. Fastener system of type suitable for application indicated, fabricated from corrosion-resistant materials, with capability to sustain, without failure, a load equal to 10 times design load .

1.7 ALUMINUM FINISHES

Unless otherwise specified, aluminum items shall have standard mill finish. The thickness of the coating shall be not less than that specified for protective and decorative type finishes for items used in interior locations or architectural Class I type finish for items used in exterior locations. Items to be anodized shall receive a polished satin finish. Aluminum surfaces to be in contact with plaster or concrete during construction shall be protected with a field coat.

1.8 SHOP PAINTING

Surfaces of ferrous metal except galvanized surfaces, shall be cleaned and shop coated with the manufacturer's standard protective coating unless otherwise specified. Surfaces of items to be embedded in concrete shall not be painted. Items to be finish painted shall be prepared according to manufacturer's recommendations or as specified.

PART 2 PRODUCTS

2.1 HANDRAILS

Handrails shall be designed to resist a concentrated load of 890 N (200 pounds) in any direction at any point of the top of the rail or 292 Newtons per meter (20 pounds per foot) applied horizontally to top of the rail, whichever is more severe.

2.1.1 Steel Handrails, Including Carbon Steel Inserts

Steel handrails, including inserts in concrete, shall be steel pipe conforming to ASTM A 53/A 53M or structural tubing conforming to ASTM A 500, Grade A or B of equivalent strength. Steel railings shall be 50 mm nominal size. Railings shall be hot-dip galvanized and shop painted. Pipe collars shall be hot-dip galvanized steel.

a. Joint posts, rail, and corners shall be fabricated by one of the following methods:

(1) Flush type rail fittings of commercial standard, welded and ground smooth with railing splice locks secured with 10 mm hexagonal recessed-head setscrews.

(2) Mitered and welded joints by fitting post to top rail and intermediate rail to post, mitering corners, groove welding joints, and grinding smooth. Railing splices shall be butted and reinforced by a tight fitting interior sleeve not less than 150 mm long.

(3) Railings may be bent at corners in lieu of jointing, provided bends are made in suitable jigs and the pipe is not crushed.

b. Removable sections, toe-boards, and brackets shall be provided as indicated.

2.2 LADDERS

Ladders shall be galvanized steel or aluminum, fixed rail type. Fabrication of ladders shall consist of solid-section rod rungs fitted into holes in bar side rails and welded. Splices in side rails shall be made using full penetration welds and shall provide a flush and smooth transition between connecting ends. All welds shall be ground smooth Ladder rails shall be welded to bent-bar supporting brackets anchored to supporting structure as shown. Provide nonslip surfaces on top of each rung.

2.2.1 Ladder Cages

Provide where required by code. Fabricate 50 by 6 mm horizontal bands and 40 by 5 mm vertical bars. Provide attachments for fastening bands to the side rails of ladders or directly to the structure. Provide and fasten vertical bars on the inside of the horizontal bands. Extend cages not less than 690 mm or more than 710 mm from the centerline of the rungs, excluding the flare at the bottom of the cage, and not less than 690 mm in width. Clear the inside of the cage of projections.

2.3 FLOOR GRATINGS AND FRAMES

Carbon steel grating shall be designed to meet the indicated load requirements. Edges shall be banded with bars 6 mm less in height than bearing bars for grating sizes above 19 mm. Banding bars shall be flush with the top of bearing grating. Frames shall be of welded steel construction finished to match the grating. Floor gratings and frames shall be galvanized after fabrication.

2.4 STEEL STAIRS

Steel stairs shall be complete with structural or formed channel stringers,

steel plate treads, landings, columns, handrails, and necessary bolts and other fastenings as indicated. Structural steel shall conform to ASTM A 36/A 36M. Stairs and accessories shall be painted. Risers on stairs with metal pan treads shall be deformed to form a sanitary cove to retain the tread concrete. Integral nosings shall have braces extended into the concrete fill. Gratings for treads and landings shall conform to NAAMM MBG 531. Grating treads shall have slip-resistant nosings.

2.5 CHIMNEYS, VENTS, AND FLUES

Chimney connectors shall be formed of not lighter than 1.01 mm (20 gauge) galvanized steel. Stacks shall be designed and constructed to withstand a wind velocity of 122 km/h in accordance with ASCE 7. Unlined stacks shall be constructed of black-steel plates not less than 5 mm thick conforming to ASTM A 36/A 36M. Seams and joints shall be welded, except that an angle flange shall be provided for connection to the boiler, other equipment, and stack support.

2.6 MISCELLANEOUS

Miscellaneous plates and shapes for items that do not form a part of the structural steel framework, such as lintels, sill angles, miscellaneous mountings, and frames, shall be provided to complete the work.

2.7 SAFETY CHAINS

Safety chains shall be galvanized welded steel. Safety chains shall be straight link style, 5 mm diameter, minimum 39 links per meter (12 links per foot) and with bolt type snap hooks on each end.

2.8 ACCESS PANELS

Fabricate frame of preformed angle or channel with welded joints. Perforate wide leg or flange of frame section or extend frame section into expanded metal wings to provide a key for the plaster. Cover shall be hinged or snap-on type with turn-latch or spring catch. Fabricate access panels not larger than 600 by 900 mm from 1.8 mm thick steel with frames not lighter than 1.5 mm thick. Fabricate access panels larger than 600 by 900 mm as indicated. Factory-prime panels with rust-inhibitive paint.

2.9 MISCELLANEOUS METAL SUPPORTS

Provide miscellaneous steel framing and supports not specified in other Sections as needed to complete the Work. Fabricate units from steel shapes, plates, and bars of welded construction, unless otherwise indicated. Fabricate to sizes, shapes, and profiles indicated and as necessary to receive adjacent construction retained by framing and supports. Cut, drill, and tap units to receive hardware, hangers, and similar items.

2.10 WINDOW SUB-SILL

Window sub-sill shall be of 20 gauge steel of size and design indicated. Not less than two anchors per window section shall be provided for securing into mortar joints of masonry sill course. Sills for banks of windows shall have standard mill finish with a protective coating.

Product shall be Galvanized steel window sill 1 mm thick (20 gauge.

2.11 CLOTHES LINE ASSEMBLY

Fabricate clothes line assembly to comply with requirements indicated on Drawing for design, dimensions, member sizes and spacing, details, finish, and anchorage.

Assemble clothes line assembly in the shop to greatest extent possible to minimize field splicing and assembly. Disassemble units only as necessary for shipping and handling limitations. Clearly mark units for reassembly and coordinated installation.

Wire-rope assemblies (clothes line cable). Minimize amount of turnbuckle take-up used for dimensional adjustment so maximum amount is available for tensioning wire ropes. Wire rope shall be nylon covered.

Cut, drill, and punch metals cleanly and accurately. Remove burrs and ease edges to a radius of approximately 1 mm (1/32 inch), unless otherwise indicated. Remove sharp or rough areas on exposed surfaces.

Form work true to line and level with accurate angles and surfaces.

Fabricate connections that will be exposed to weather in a manner to exclude water. Provide weep holes where water may accumulate.

Cut, reinforce, drill, and tap as indicated to receive finish hardware, screws, and similar items.

Welded Connections: Cope components at connections to provide close fit, or use fittings designed for this purpose. Weld all around at connections, including at fittings.

2.12 WELDING HOOD

Welding hoods shall be provided where indicated on the drawings. Hoods shall be the canopy type and the plan dimensions shall be as indicated on the drawings. Hoods shall be fabricated of black carbon steel sheets or zinc coated steel sheets no less than 18 gauge. All metal edges shall be hemmed. Provide adequate steel shapes to properly stiffen the hood and retain its shape. Steel shapes shall be the same material as the hood material. Hoods fabricated from black steel shall be primed and painted in accordance with Division 9. The top of the hood shall be tapered at a 45 degree angle to the size of the exhaust fan suction duct indicated on the drawings. The front, sides, and back of the hood shall be 460 mm high from the air inlet (prior to the taper). The hoods shall be erected with steel shapes and rods and adequately braced. Erect the hood 1219 mm above the work table (welding bench furnished by owner). Any areas where the zinc coating is damaged from handling or welding shall be painted with zinc-rich paint.

2.13 GALVANIZED SECURITY GRILLES

Space 22 mm diameter, double-ribbed bars not to exceed 150 mm on center passing through and interlocking with 10 mm thick by 60 mm wide horizontal flat bars not exceeding 400 mm on center.

Plug weld and/or stitch weld security grating bar assembly to full perimeter plate frame and sub-frame at 255 mm on center with 12 mm diameter plug welds and/or 37 mm long stitch welds at 255 mm on center staggered.

Security round and flat bars, perimeter plate frame, and perimeter sub-frame members shall be fabricated from 1018-alloy steel and made tool-resistant.

2.14 GUARD POSTS (BOLLARDS/PIPE GUARDS)

Provide standard weight steel pipe as indicated on Drawings. Anchor posts in concrete as indicated and fill solidly with concrete with minimum compressive strength as indicated on Structural Drawings for footings.

2.15 Repair of Zinc-Coated Surfaces

Repair damaged surfaces with galvanizing repair method and paint conforming to ASTM A 780 or by application of stick or thick paste material specifically designed for repair of galvanizing. Clean areas to be repaired and remove slag from welds. Heat surfaces to which stick or paste material is applied, with a torch to a temperature sufficient to melt the metallics in stick or paste; spread molten material uniformly over surfaces to be coated and wipe off excess material.

PART 3 EXECUTION

3.1 GENERAL INSTALLATION REQUIREMENTS

All items shall be installed at the locations shown and according to the manufacturer's recommendations. Items listed below require additional procedures as specified.

3.2 REMOVABLE ACCESS PANELS

A removable access panel not less than 300 by 300 mm shall be installed directly below each valve, flow indicator, damper, or air splitter that is located above the ceiling, other than an acoustical ceiling, and that would otherwise not be accessible.

3.3 ATTACHMENT OF HANDRAILS

3.3.1 Installation of Steel Handrails

Installation shall be masonry with expansion shields and bolts, through-bolts, or toggle bolts. Rail ends shall be secured by steel pipe flanges through-bolted to a back plate or by 6 mm lag bolts to studs or solid backing.

3.4 INSTALLATION OF CHIMNEYS, VENTS, AND FLUES

A top band shall be provided on stacks for attachment of seismic bracing. Provide roof housing, rain cap, and other means required for a complete installation to prevent accumulation of water in the chimney, vent, or flue.

3.5 TRENCH FRAMES AND COVERS

Trench frames and covers shall finish flush with the floor.

3.6 INSTALLATION OF GUARD POSTS (BOLLARDS/PIPE GUARDS)

Pipe guards shall be set vertically in concrete piers. Piers shall be constructed of, and the hollow cores of the pipe filled with, concrete specified in Section 03300 CAST-IN-PLACE CONCRETE.

-- End of Section --

SECTION 05811

EXPANSION JOINT SYSTEMS

PART 1 GENERAL

1.1 DEFINITIONS

1.1.1 Expansion Joint System (Architectural Joint System)

Any filler or cover used to span, fill, cover, or seal a joint, except expanding foam seals and poured or foamed in-place sealants.

1.1.2 Cyclic Movement

Periodic change between widest and narrowest joint widths in an automatically mechanically controlled system.

1.1.3 Fire Barriers

Any material or material combination, when fire tested after cycling, designated to resist passage of flame and hot gases through a movement joint.

1.1.4 Maximum Joint Width

Widest linear gap a joint system tolerates and performs its designed function without damaging its functional capabilities.

1.1.5 Minimum Joint Width

Narrowest linear gap a joint system tolerates and performs its designed function without damaging its functional capabilities.

1.1.6 Movement Capability

Value obtained from the difference between widest and narrowest widths of a joint opening typically expressed in numerical values (mm or inches) or a percentage of nominal value of joint width.

1.1.7 Nominal Joint Width

Width of linear gap indicated as representing the conditions existing when architectural joint systems will be installed or, if no nominal joint width is indicated, a width equal to the sum of maximum and minimum joint widths divided by two.

1.2 PERFORMANCE REQUIREMENTS

1.2.1 General

Provide factory-fabricated architectural joint systems capable of withstanding the types of loads and of accommodating the kinds of movement, and the other functions for which they are designed including those specified below, without failure. Types of failure include those listed below.

Visual metal fatigue.
Disengagement of components.
Broken component.
Permanent deformation of component.
Loose components after test.
Deep scratches in component.
Scaling or cracking of the component.
Tearing (cohesive failure) of the component.
Loss of component.
Loss of component bonding (adhesive failure).
Dislocation of the component during testing.
Loss of component recovery during testing.

1.2.1.1 Exterior Joints

Provide joint systems that prevent penetration of water, moisture, and other substances deleterious to building components or content.

1.3 SUBMITTALS

Government approval is required for submittals with a "G" designation; submittals not having a "G" designation are for information only. When used, a designation following the "G" designation identifies the office that will review the submittal for the Government. Submit the following in accordance with Section 01330 SUBMITTAL PROCEDURES:

SD-02 Shop Drawings

Waterstops; G AED

Shop drawings and fabrication drawings provided by the manufacturer or prepared by the Contractor.

SD-03 Product Data

Preformed Expansion Joint Filler
Sealant
Waterstops

Manufacturer's literature, including safety data sheets, for preformed fillers and the lubricants used in their installation; field-molded sealants and primers (when required by sealant manufacturer); preformed compression seals; and waterstops. Manufacturer's recommended instructions for installing preformed fillers, field-molded sealants; preformed compression seals; and waterstops; and for splicing non-metallic waterstops.

SD-04 Samples

Lubricant for Preformed Compression Seals

Specimens identified to indicate the manufacturer, type of material, size and quantity of material, and shipment or lot represented. Each sample shall be a piece not less than 3 m of 25 mm nominal width or wider seal or a piece not less than 4 m of compression seal less than 25 mm nominal width. One L of lubricant shall be provided.

Field-Molded Type

Four liters of field-molded sealant and one L of primer (when primer is recommended by the sealant manufacturer) identified to indicate manufacturer, type of material, quantity, and shipment or lot represented.

Non-metallic Materials

Specimens identified to indicate manufacturer, type of material, size, quantity of material, and shipment or lot represented. Each sample shall be a piece not less than 300 mm long cut from each 61 m of finished waterstop furnished, but not less than a total of 1 m of each type, size, and lot furnished. One splice sample of each size and type for every 50 splices made in the factory and every 10 splices made at the job site. The splice samples shall be made using straight run pieces with the splice located at the mid-length of the sample and finished as required for the installed waterstop. The total length of each splice shall be not less than 300 mm long.

SD-07 Certificates

Preformed Expansion Joint Filler
Sealant
Waterstops

Certificates of compliance stating that the joint filler and sealant materials and waterstops conform to the requirements specified.

1.4 QUALITY ASSURANCE

1.4.1 Source Limitations

Obtain architectural joint systems through one source from a single manufacturer. Coordinate compatibility with adjoining joint systems specified in other Sections.

PART 2 PRODUCTS

2.1 MATERIALS

2.1.1 Aluminum

Aluminum extrusion minimum tensile ad yield strength 22 and 16 ksi respectively and 38 and 35 ksi for aluminum sheet and plate.

Apply manufacturer's standard protective coating on aluminum surfaces to be placed in contact with cementitious materials.

2.1.2 Preformed Seals

Single or multicellular extruded elastomeric seals designed with or without continuous, longitudinal, internal baffles. Formed to be installed in frames or with anchored flanges, in color indicated or, if not indicated, as selected by Architect from manufacturer's standard colors.

2.1.3 Accessories

Manufacturer's standard anchors, clips, fasteners, set screws, spacers, flexible moisture barrier and filler materials, drain tubes, lubricants, adhesives, and other accessories compatible with material in contact, as indicated or required for complete installations.

2.2 EXPANSION JOINT SYSTEMS

2.2.1 General

Provide expansion joint systems of design, basic profile, materials, and operation indicated. Provide units with the capability to accommodate joint widths indicated and variations in adjacent surfaces.

a. Furnish units in longest practicable lengths to minimize number of end joints. Provide hairline mitered corners where joint changes directions or abuts other materials.

b. Include closure materials and transition pieces, tee-joints, corners, curbs, cross-connections, and other accessories as required to provide continuous joint systems.

2.2.2 Interior Joints

Provide interior joint profiles for use in walls, floors and ceilings. All profiles, side plates and mounting brackets shall be made of aluminum. Flexible insert is shall be made of synthetic rubber, long wearing, temperature resistant, weather resistant, extensively resistant to oils, acid and bitumen. Joints shall be fixed to the surface by adhesive or mechanical means.

2.2.3 Exterior Joints

2.2.3.1 Exterior Seismic joint

Provide manufacturer's assemblies designed to accommodate seismic movement. Provide prefabricated units for corner and joint intersections and horizontal and vertical transitions, splicing units, inner seals, adhesives, coatings, and other components as recommended by joint unit manufacturer for complete installation.

2.2.3.2 Aluminum Expansion Joint Assemblies

Assemblies consisting of pairs of aluminum units and provisions for anchoring and sealing to roofing membrane or flashing or wall finish, as applicable, in a waterproof-sealed joint. Provide free-to-move, extruded-aluminum cap anchored against displacement and waterproofed by integral seals.

a. Base frame shall be extruded aluminum with mill finish, minimum 2.0-mm-thick with mill finish.

b. Moisture barrier shall be semiconcealed, captive, polymeric sheet bellows unit of neoprene, EPDM, reinforced chlorinated polyethylene, or PVC, not less than 0.8 mm thick.

PART 3 EXECUTION

3.1 PREPARATION

3.1.1 General

Prepare substrates according to architectural joint system manufacturer's written instructions.

3.1.2 Coordination

Coordinate and furnish anchorages, Placement Drawings, and instructions for installing joint systems to be embedded in or anchored to concrete or to have recesses formed into edges of concrete slab for later placement and grouting-in of frames.

3.1.3 Fastening to In-Place Construction

Provide anchorage devices and fasteners where necessary to secure joint systems to in-place construction, including threaded fasteners with drilled-in expansion shields for masonry and concrete where anchoring members are not embedded in concrete. Provide fasteners of metal, type, and size to suit type of construction indicated and to provide for secure attachment of joint systems.

3.2 INSTALLATION

3.2.1 General

Comply with manufacturer's written instructions for handling and installing architectural joint assemblies and materials, unless more stringent requirements are indicated.

3.2.2 Coordination

Coordinate installation of architectural joint assembly materials and associated work so complete assemblies comply with assembly performance requirements.

3.2.3 Terminations

Terminate exposed ends of exterior architectural joint assemblies with factory-fabricated termination devices to maintain waterproof system.

3.2.4 Transitions

Install factory-fabricated transitions between wall expansion-joint cover assemblies and roof expansion-joint assemblies to provide continuous, uninterrupted, watertight construction.

3.2.5 Cutting, Fitting, and Placement

Perform cutting, drilling, and fitting required to install joint systems.

a. Install joint cover assemblies in true alignment and proper relationship to joints and adjoining finished surfaces measured from established lines and levels.

b. Allow adequate free movement for thermal expansion and contraction of

metal to avoid buckling.

c. Set covers in horizontal surfaces at elevations that place exposed surfaces flush with adjoining finishes.

d. Locate wall, ceiling, and soffit covers in continuous contact with adjacent surfaces.

e. Securely attach in place with required accessories.

f. Locate anchors at interval recommended by manufacturer, but not less than 75 mm from each end and not more than 600 mm o.c.

3.2.6 Continuity

Maintain continuity of joint systems with a minimum number of end joints and align metal members. Cut and fit ends to produce joints that will accommodate thermal expansion and contraction of metal to avoid buckling of frames. Adhere flexible filler materials, if any, to frames with adhesive or pressure-sensitive tape as recommended by manufacturer.

3.2.7 Joint Systems with Seals

Seal end joints within continuous runs and joints at transitions according to manufacturer's written instructions to provide a watertight installation.

3.2.8 Expansion Seals

Install interior seals in continuous lengths. Install exterior seal in standard lengths and vulcanize or heat-weld field splice joints to provide watertight joints using manufacturer's recommended procedures. Seal transitions and end joints according to manufacturer's written instructions.

3.3 CLEANING AND PROTECTION

Do not remove protective covering until finish work in adjacent areas is complete. When protective covering is removed, clean exposed metal surfaces to comply with manufacturer's written instructions.

-- End of Section --

SECTION 06411

ARCHITECTURAL CASEWORK

PART 1 GENERAL

1.1 REFERENCES

The publications listed below form a part of this specification to the extent referenced. The publications are referred to in the text by basic designation only.

AMERICAN NATIONAL STANDARDS INSTITUTE (ANSI)

ANSI A208.1	(1999) Particleboard Mat Formed Woods
ANSI A208.2	(1994) Medium Density Fiberboard (MDF)

ASTM INTERNATIONAL (ASTM)

ASTM D 1037	(1999) Evaluating Properties of Wood-Base Fiber and Particle Panel Materials

ARCHITECTURAL WOODWORK INSTITUTE (AWI)

AWI Qual Stds	(1999) Architectural Woodwork Quality Standards

1.2 GENERAL DESCRIPTION

Work in this section includes custom casework cabinets as shown on the drawings and as described in this specification. This Section includes cabinet hardware. All exposed and semi-exposed surfaces, whose finish is not otherwise noted on the drawings or finish schedule, shall be sanded smooth and shall receive a clear finish of polyurethane. Wood finish may be shop finished or field applied in accordance with Section 09900 PAINTING, GENERAL.

1.3 SUBMITTALS

Government approval is required for submittals with a "G" designation; submittals not having a "G" designation are for information only. When used, a designation following the "G" designation identifies the office that will review the submittal for the Government. All items designated with a "G", including product literature, calculations, component data, certificates, diagrams, drawings, and samples shall be submitted concurrently in one complete system submittal. Omission of any required submittal item from the package shall be sufficient cause for disapproval of the entire submittal. Unless otherwise indicated in the submittal review commentary, disapproval of any item within the package shall require a re-submittal of the entire system package, in which all deficiencies shall be corrected. The following shall be submitted in accordance with Section 01330 SUBMITTAL PROCEDURES:

SD-02 Shop Drawings

Shop Drawings
Installation

Shop drawings showing all fabricated casework items in plan view, elevations and cross-sections to accurately indicate materials used, details of construction, dimensions, methods of fastening and erection, and installation methods proposed. Shop drawing casework items shall be clearly cross-referenced to casework items located on the project drawings. Shop drawings shall include a color schedule of all casework items to include all countertop, exposed, and semi-exposed cabinet finishes to include finish material manufacturer, pattern, and color.

SD-03 Product Data

Wood Materials
Wood Finishes
Finish Schedule

Descriptive data which provides narrative written verification of all types of construction materials and finishes, methods of construction, etc. not clearly illustrated on the submitted shop drawings. Data shall provide written verification of conformance with AWI Qual Stds for the quality indicated to include materials, tolerances, and types of construction. Both the manufacturer of materials and the fabricator shall submit available literature which describes re-cycled product content, operations and processes in place that support efficient use of natural resources, energy efficiency, emissions of ozone depleting chemicals, management of water and operational waste, indoor environmental quality, and other production techniques supporting sustainable design and products.

SD-04 Samples

Plastic Laminates

Two samples of each plastic laminate pattern and color. Samples shall be a minimum of 120 by 170 mm in size.

Cabinet Hardware

One sample of each cabinet hardware item specified to include hinges, pulls, and drawer glides.

SD-07 Certificates

Quality Assurance
Laminate Clad Casework

A quality control statement which illustrates compliance with and understanding of AWI Qual Stds requirements, in general, and the specific AWI Qual Stds requirements provided in this specification. The quality control statement shall also certify a minimum of ten years Contractor's experience in laminate clad casework fabrication and construction. The quality control statement shall provide a list of a minimum of five successfully completed projects of a similar scope, size, and complexity.

1.4 QUALITY ASSURANCE

Unless otherwise noted on the drawings, all materials, construction methods, and fabrication shall conform to and comply with the custom grade quality standards as outlined in AWI Qual Stds, Section 400G and Section 400B for laminate clad cabinets. These standards shall apply in lieu of omissions or specific requirements in this specification. Contractors and their personnel engaged in the work shall be able to demonstrate successful experience with work of comparable extent, complexity and quality to that shown and specified. Contractor must demonstrate knowledge and understanding of AWI Qual Stds requirements for the quality grade indicated.

1.5 DELIVERY AND STORAGE

Casework may be delivered knockdown or fully assembled. All units shall be delivered to the site in undamaged condition, stored off the ground in fully enclosed areas, and protected from damage. The storage area shall be well ventilated and not subject to extreme changes in temperature or humidity.

1.6 SEQUENCING AND SCHEDULING

Work shall be coordinated with other trades. Units shall not be installed in any room or space until painting, and ceiling installation are complete within the room where the units are located. Floor cabinets shall be installed before finished flooring materials are installed.

1.7 PROJECT/SITE CONDITIONS

Field measurements shall be verified as indicated in the shop drawings before fabrication.

PART 2 PRODUCTS

2.1 WOOD MATERIALS

2.1.1 Veneer

Plain-Sliced Red Oak-A-Grade Select.

2.1.2 Panel Products

2.1.2.1 Plywood

All plywood panels used for framing purposes shall be veneer core plywood. Nominal thickness of plywood panels shall be as indicated in this specification and on the drawings.

2.1.2.2 Particleboard

All particleboard shall be industrial grade, medium density (640 to 800 kg per cubic meter), 18 mm thick. A moisture-resistant particleboard in grade Type 2-M-2 or 2-M-3 shall be used as the substrate for plastic laminate covered countertops and other areas subjected to moisture. Particleboard shall meet the minimum standards listed in ASTM D 1037 and ANSI A208.1.

2.1.2.3 Medium Density Fiberboard

Medium density fiberboard (MDF) shall be an acceptable panel substrate where noted on the drawings. Medium density fiberboard shall meet the minimum standards listed in ANSI A208.2.

2.2 CABINET HARDWARE

All hardware shall consist of the following components:

a. Door Hinges: Self-closing, concealed type.

b. Cabinet Pulls: Wire type.

c. Drawer Slide: Side mounted type with full extension and a minimum 45kg load capacity. Slides shall include an integral stop to avoid accidental drawer removal.

d. Cabinet locks: Provide integral door and drawer locks for all cabinets in medical clinic. Locks shall be deadbolt type locks, surface mounted on inside of door or drawer with only the cylinder exposed on outside.

e. Adjustable Shelf Support System:

12) Multiple holes with metal pin supports.

All cabinet hardware shall have satin chrome finish to match door hardware in Section 08710.

2.3 FASTENERS

Nails, screws, and other suitable fasteners shall be the size and type best suited for the purpose and as recommended by casework manufacturer.

2.4 ADHESIVES, CAULKS, AND SEALANTS

2.4.1 Adhesives

Adhesives shall be of a formula and type specifically recommended by manufacturer for intended use. Adhesives shall be selected for their ability to provide a durable, permanent bond and shall take into consideration such factors as materials to be bonded, expansion and contraction, bond strength, fire rating, and moisture resistance.

2.4.1.1 Wood Joinery

Adhesives used to bond wood members shall be for exterior use. Use multiple Dovetail for Drawer Assembly.

2.4.1.2 Laminate Adhesive

Adhesive used to join high-pressure decorative laminate to wood shall be a water-based contact adhesive . PVC edgebanding shall be adhered using a polymer-based hot melt glue.

2.4.2 Sealant

Sealant shall be of a type and composition recommended by the substrate

manufacturer to provide a moisture barrier at sink cutouts and all other locations where unfinished substrate edges may be subjected to moisture.

2.5 WOOD FINISHES

As selected by government from Manufacturer's standard list.

2.6 Countertops

Provide "Chem surf" for clinic Wood particle core with acid resistant plastic laminate surface, color Black, square edge, self edge. Provide High pressure laminate for reception desk.

2.7 ACCCESSORIES

2.7.1 Grommets

Grommets diameter shall be of 30 mm minimum. Locations shall be as indicated on the drawings.

2.8 FABRICATION

Fabrication and assembly of components shall be accomplished at the shop site to the maximum extent possible. Construction and fabrication of cabinets and their components shall meet or exceed the requirements for AWI custom grade unless otherwise indicated in this specification. Cabinet style shall be flush overlay, in accordance with AWI Qual Stds, Section 400-G descriptions .

PART 3 EXECUTION

3.1 INSTALLATION

Installation shall comply with applicable requirements for AWI Qual Stds custom quality standards. Countertops and fabricated assemblies shall be installed level, plumb, and true to line, in locations shown on the drawings. Cabinets and other casework assemblies shall be attached and anchored securely to the floor and walls with mechanical fasteners that are appropriate for the wall and floor construction.

3.1.1 Anchoring Systems

3.1.1.1 Wall

Cabinet to be wall mounted shall utilize manufacturer's recommended anchering system.

3.1.2 Countertops

Countertops shall be installed in locations as indicated on the drawings. Countertops shall be fastened to supporting casework structure with mechanical fasteners, hidden from view. All joints formed by the countertop and adjacent wall surfaces shall be filled.

3.1.3 Hardware

Casework hardware shall be installed in types and locations as indicated on the drawings.

3.1.4 Doors, Drawers and Removable Panels

The fitting of doors, drawers and removable panels shall be accomplished within target fitting tolerances for gaps and flushness in accordance with AWI Qual Stds custom grade.

3.1.5 Plumbing Fixtures

Sinks, sink hardware, and other plumbing fixtures shall be installed in locations as indicated on the drawings and in accordance with Section 15400 PLUMBING, GENERAL PURPOSE.

-- End of Section --

SECTION 07112

BITUMINOUS DAMPPROOFING

PART 1 GENERAL

1.1 REFERENCES

The publications listed below form a part of this specification to the extent referenced. The publications are referred to within the text by the basic designation only.

ASTM INTERNATIONAL (ASTM)

ASTM D 1187	(1997; R 2002e1) Asphalt-Base Emulsions for Use as Protective Coatings for Metal
ASTM D 1227	(1995; R 2000) Emulsified Asphalt Used as a Protective Coating for Roofing

BRITISH STANDARDS INSTITUTION (BSI)

BS 6949:1991	(1991) Specification for bitumen-based coatings for cold application excluding use in contact with potable water

1.2 SUBMITTALS

Government approval is required for submittals with a "G" designation; submittals not having a "G" designation are for information only. When used, a designation following the "G" designation identifies the office that will review the submittal for the Government. The following shall be submitted in accordance with Section 01330 SUBMITTAL PROCEDURES:

SD-07 Certificates

Materials

1.3 DELIVERY AND STORAGE

Deliver materials in sealed containers bearing manufacturer's original labels. Labels shall include date of manufacture, contents of each container, performance standards that apply to the contents and recommended shelf life.

1.4 SAFETY AND HEALTH REQUIREMENTS

Refer to manufacturer's Materials safety Data Sheet

PART 2 PRODUCTS

2.1 EMULSION-BASED ASPHALT DAMPPROOFING

2.1.1 Non-Fibrated Emulsion-Based Asphalt

Non-fibrated emulsion-based asphalt dampproofing shall be cold-applied type conforming to ASTM D 1187 Type II, ASTM D 1227 Type III or BS 6949:1991.

Asphalt shall contain a minimum 58 percent solids by weight, 55 percent solids by volume.

PART 3 EXECUTION

3.1 APPLICATION

Apply per manufacturers written instructions

-- End of Section --

SECTION 07212

MINERAL FIBER BLANKET INSULATION

PART 1 GENERAL

1.1 REFERENCES

The publications listed below form a part of this specification to the extent referenced. The publications are referred to in the text by the basic designation only.

ASTM INTERNATIONAL (ASTM)

ASTM C 665	(2001e1) Specification for Mineral-Fiber Blanket Thermal Insulation for Light Frame Construction and Manufactured Housing
ASTM E 96	(2000e1) Water Vapor Transmission of Materials
ASTM E 136	(1996; Rev. A) Behavior of Materials in a Vertical Tube Furnace at 750 Degrees C

BRITISH STANDARDS INSTITUTION (BSI)

BS 874	(1986) Methods for determining thermal insulating properties.

U.S. NATIONAL ARCHIVES AND RECORDS ADMINISTRATION (NARA)

29 CFR 1910.134	Respiratory Protection

NATIONAL FIRE PROTECTION ASSOCIATION (NFPA)

NFPA 70	(2005) National Electrical Code

1.2 SUBMITTALS

Government approval is required for submittals with a "G" designation; submittals not having a "G" designation are for information only. When used, a designation following the "G" designation identifies the office that will review the submittal for the Government. The following shall be submitted in accordance with Section 01330 SUBMITTAL PROCEDURES:

SD-03 Product Data

Blanket insulation

Accessories

1.3 DELIVERY, STORAGE, AND HANDLING

1.3.1 Delivery

Deliver materials to site in original sealed wrapping bearing

manufacturer's name and brand designation, specification number, type, grade, R-value, and class. Store and handle to protect from damage. Do not allow insulation materials to become wet, soiled, crushed, or covered with ice or snow. Comply with manufacturer's recommendations for handling, storing, and protecting of materials before and during installation.

1.3.2 Storage

Inspect materials delivered to the site for damage; unload and store out of weather in manufacturer's original packaging. Store only in dry locations, not subject to open flames or sparks, and easily accessible for inspection and handling.

1.4 SAFETY PRECAUTIONS

1.4.1 Respirators

Provide installers with dust/mist respirators, training in their use, and protective clothing, all approved by National Institute for Occupational Safety and Health (NIOSH)/Mine Safety and Health Administration (MSHA) in accordance with 29 CFR 1910.134.

1.4.2 Smoking

Do not smoke during installation of blanket thermal insulation.

PART 2 PRODUCTS

2.1 MANUFACTURERS

Basis of Design: Izocam Glassfiber Type 16 kg/m3, 75 mm Unfaced Blankets by IMBT Group; Building Roll KBR16 by Kimmo (Kuwait Insulating Materials Manufacturing Company); or Polyglass Poly Building Insulation by Poly Glass Fibre (M) BHD.

Acceptable Manufacturers: Izocam by IMBT Group, Kimmco, or equal.

1. Basis of Design manufacturer.
2. Kimmo (Kuwait Insulating Materials Manufacturing Company).
3. Isover.
4. Poly Glass Fibre (M) BHD.
5. Equivalent product complying with requirements of this specification for proposed variant products.

2.2 BLANKET INSULATION

ASTM C 665 or BS 874, Types I, II, or III Glass fiber blankets.

2.2.1 Prohibited Materials

Do not provide asbestos-containing materials.

2.3 BLOCKING

Wood, metal, unfaced mineral fiber blankets in accordance with ASTM C 665, Type I , or other approved materials. Use only non-combustible materials meeting the requirements of ASTM E 136 for blocking around chimneys and heat producing devices.

2.4 PRESSURE SENSITIVE TAPE

As recommended by the insulation manufacturer.

2.5 ACCESSORIES

2.5.1 Adhesive

As recommended by the insulation manufacturer.

2.5.2 Mechanical Fasteners

Corrosion resistant fasteners as recommended by the insulation manufacturer.

2.5.3 Wire Mesh

Corrosion resistant and as recommended by the insulation manufacturer.

2.5.4 VAPOR BARRIER

Vapor barrier shall be polyethylene sheeting with a minimum thickness of 0.15 mm (6 mils) or other equivalent material having a vapor permeance rating not exceeding 30 nanograms per Pascal per second per square meter (0.5 perms) as determined in accordance with ASTM E 96.

PART 3 EXECUTION

3.1 PREPARATION

3.1.1 Blocking at Soffit Vents

Prior to installation of insulation, install permanent blocking to prevent insulation from slipping over, clogging, or restricting air flow through soffit vents at eaves.

3.1.2 Blocking Around Heat Producing Devices

Install non-combustible blocking around heat producing devices to provide the following clearances:

a. Recessed lighting fixtures, including wiring compartments, ballasts, and other heat producing devices, unless these are certified by the manufacturer for installation surrounded by insulation: 75 mm from outside face of fixtures and devices or as required by NFPA 70, if insulation is to be placed above fixture or device, 600 mm above fixture.

b. Vents and vent connectors used for venting the products of combustion. Provide 50 mm minimum clearance or as required by equipment manufacturer.

3.2 INSTALLATION

3.2.1 Insulation

Install and handle insulation in accordance with manufacturer's instructions. Keep material dry and free of extraneous materials. Ensure personal protective clothing and respiratory equipment is used as required. Observe safe work practices.

3.2.1.1 Electrical wiring

Do not install insulation in a manner that would sandwich electrical wiring between two layers of insulation.

3.2.1.2 Continuity of Insulation

Install blanket insulation to butt tightly against adjoining blankets and to joists, and any obstructions. Provide continuity and integrity of insulation at corners, wall to ceiling joints, and roof. Avoid creating thermal bridges. Offset insulation butt joints in adjacent layers.

3.2.1.3 Cold Climate Requirement

Place insulation to the outside of pipes.

3.2.1.4 Insulation without Affixed Vapor Retarder

Provide snug friction fit to hold insulation in place. Stuff pieces of insulation into cracks between trusses, joists, studs and other framing, such as at attic access doors, door and window heads, jambs, and sills, band joists, and headers.

3.2.1.5 Sizing of Blankets

Provide only full width blankets when insulating between joists. Size width of blankets for a snug fit where joists are irregularly spaced.

3.2.1.6 Thickness of Blankets

Provide overall insualtion assembly thickness of not less than 15 cm.

3.2.1.7 Special Requirements for Ceilings

Place insulation under electrical wiring occurring across joists. Pack insulation into narrowly spaced framing. Do not block flow of air through soffit vents.

-- End of Section --

SECTION 07214

BOARD AND BLOCK INSULATION

PART 1 GENERAL

1.1 REFERENCES

The publications listed below form a part of this specification to the extent referenced. The publications are referred to within the text by the basic designation only.

ASTM INTERNATIONAL (ASTM)

ASTM C 1289	(2003) Faced Rigid Cellular Polyisocyanurate Thermal Insulation Board
ASTM C 552	(2003) Cellular Glass Thermal Insulation
ASTM C 578	(2004) Rigid, Cellular Polystyrene Thermal Insulation
ASTM C 59/C 59M1	(2001) Unfaced Preformed Rigid Cellular Polyisocyanurate Thermal Insulation
ASTM C 612	(2004) Mineral Fiber Block and Board Thermal Insulation
ASTM E 84	(2004) Surface Burning Characteristics of Building Materials

1.2 SUBMITTALS

Government approval is required for submittals with a "G" designation; submittals not having a "G" designation are for information only. When used, a designation following the "G" designation identifies the office that will review the submittal for the Government. The following shall be submitted in accordance with Section 01330 SUBMITTAL PROCEDURES:

SD-03 Product Data

Block or board insulation; G AED

Vapor retarder

Pressure sensitive tape

Protection board or coating

Accessories

SD-08 Manufacturer's Instructions

Block or Board Insulation

Adhesive

1.3 DELIVERY, STORAGE, AND HANDLING

1.3.1 Delivery

Deliver materials to the site in original sealed wrapping bearing manufacturer's name and brand designation, specification number, type, grade, R-value, and class. Store and handle to protect from damage. Do not allow insulation materials to become wet, soiled, crushed, or covered with ice or snow. Comply with manufacturer's recommendations for handling, storing, and protecting of materials before and during installation.

1.3.2 Storage

Inspect materials delivered to the site for damage; unload and store out of weather in manufacturer's original packaging. Store only in dry locations, not subject to open flames or sparks, and easily accessible for inspection and handling.

1.4 SAFETY PRECAUTIONS

Refer to manufacturer's Safety instructions

PART 2 PRODUCTS

2.1 BLOCK OR BOARD INSULATION

Provide only thermal insulating materials recommended by manufacturer for type of application indicated. Provide board or block thermal insulation conforming to the following standards and the physical properties listed below:

a. Cellular Glass: ASTM C 552

b. Extruded Preformed Cellular Polystyrene: ASTM C 578

c. Mineral Fiber Block and Board: ASTM C 612

d. Unfaced Preformed Rigid Polyurethane and Polyisocyanurate Board: ASTM C 59/C 59M1

e. Faced Rigid Cellular Polyisocyanurate and Polyurethane Insulation: ASTM C 1289

2.1.1 Thermal Resistance

Ceiling R-30 Wall R-20.

2.1.2 Fire Protection Requirement

a. Flame spread index of 75 or less when tested in accordance with ASTM E 84.

b. Smoke developed index of 150 or less when tested in accordance with ASTM E 84.

2.2 PROTECTION BOARD OR COATING

As recommended by insulation manufacturer.

2.3 ACCESSORIES

2.3.1 Adhesive

As recommended by insulation manufacturer.

2.3.2 Mechanical Fasteners

Corrosion resistant fasteners as recommended by the insulation manufacturer.

PART 3 EXECUTION

3.1 EXISTING CONDITIONS

Before installing insulation, ensure that all areas that will be in contact with the insulation are dry and free of projections which could cause voids, compressed insulation, or punctured vapor retarders. If installing perimeter or under slab insulation, check that the fill is flat, smooth, dry, and well tamped. If moisture or other conditions are found that do not allow the proper installation of the insulation, do not proceed but notify the Contracting Officer of such conditions.

3.2 INSTALLATION

3.2.1 Insulation Board

Install and handle insulation in accordance with the manufacturer's installation instructions. Keep material dry and free of extraneous materials. Observe safe work practices.

3.2.2 Electrical Wiring

Do not install insulation in a manner that would sandwich electrical wiring between two layers of insulation.

3.2.3 Cold Climate Requirement

Place insulation to the outside of pipes.

3.2.4 Continuity of Insulation

Butt tightly against adjoining boards, studs, rafters, joists, sill plates, headers and obstructions. Provide continuity and integrity of insulation at corners, wall to ceiling joint, roof, and floor. Avoid creating any thermal bridges or voids.

3.3 INSTALLATION ON WALLS

3.3.1 Installation using Furring Strips

Install insulation between members as recommended by insulation manufacturer.

3.3.2 Installation on Masonry Walls

Apply board directly to masonry with adhesive or fasteners as recommended by the insulation manufacturer. Fit between obstructions without impaling board on ties or anchors. Apply in parallel courses with joints breaking midway over course below. Put ends in moderate contact with adjoining

insulation without forcing. Cut and shape as required to fit around wall penetrations, projections or openings to accommodate conduit or other services. Seal around cut-outs with sealant.

-- End of Section --

SECTION 07416

STRUCTURAL STANDING SEAM METAL ROOF (SSSMR) SYSTEM

PART 1 GENERAL

1.1 REFERENCES

The publications listed below form a part of this specification to the extent referenced. The publications are referred to within the text by the basic designation only.

ALUMINUM ASSOCIATION (AA)

AA ADM1	(2005) Aluminum Design Manual

AMERICAN INSTITUTE OF STEEL CONSTRUCTION (AISC)

AISC 360	(2005) Specification for Structural Steel Buildings

AMERICAN IRON AND STEEL INSTITUTE (AISI)

AISI SG-973	(2002) Cold-Formed Steel Design Manual

AMERICAN SOCIETY OF CIVIL ENGINEERS (ASCE)

ASCE 7	(2005) Minimum Design Loads for Buildings and Other Structures

ASTM INTERNATIONAL (ASTM)

ASTM A 463/A 463M	(2006) Steel Sheet, Aluminum-Coated, by the Hot-Dip Process
ASTM A 653/A 653M	(2006a) Steel Sheet, Zinc-Coated (Galvanized) or Zinc-Iron Alloy-Coated (Galvannealed) by the Hot-Dip Process
ASTM A 792/A 792M	(2006a) Steel Sheet, 55% Aluminum-Zinc Alloy-Coated by the Hot-Dip Process
ASTM C 1177/C 1177M	(2006) Glass Mat Gypsum Substrate for Use as Sheathing
ASTM C 1289	(2006) Faced Rigid Cellular Polyisocyanurate Thermal Insulation Board
ASTM C 991	(2003) Flexible Glass Fiber Insulation for Metal Buildings
ASTM D 1308	(2002e1) Effect of Household Chemicals on Clear and Pigmented Organic Finishes
ASTM D 1654	(2005) Evaluation of Painted or Coated Specimens Subjected to Corrosive

	Environments
ASTM D 2244	(2005) Calculation of Color Tolerances and Color Differences from Instrumentally Measured Color Coordinates
ASTM D 2247	(2002) Testing Water Resistance of Coatings in 100% Relative Humidity
ASTM D 2794	(1993; R 2004) Resistance of Organic Coatings to the Effects of Rapid Deformation (Impact)
ASTM D 3359	(2002) Measuring Adhesion by Tape Test
ASTM D 4214	(1998) Evaluating the Degree of Chalking of Exterior Paint Films
ASTM D 4397	(2002) Polyethylene Sheeting for Construction, Industrial, and Agricultural Applications
ASTM D 522	(1993a; R 2001) Mandrel Bend Test of Attached Organic Coatings
ASTM D 523	(1989; R 1999) Specular Gloss
ASTM D 5894	(1996) Cyclic Salt Fog/UV Exposure of Painted Metal, (Alternating Exposures in a Fog/Dry Cabinet and a UV/Condensation Cabinet)
ASTM D 610	(2001) Evaluating Degree of Rusting on Painted Steel Surfaces
ASTM D 714	(2002e1) Evaluating Degree of Blistering of Paints
ASTM D 968	(2005) Abrasion Resistance of Organic Coatings by Falling Abrasive
ASTM E 1592	(2001) Structural Performance of Sheet Metal Roof and Siding Systems by Uniform Static Air Pressure Difference
ASTM E 84	(2007) Standard Test Method for Surface Burning Characteristics of Building Materials
ASTM E 96/E 96M	(2005) Water Vapor Transmission of Materials
ASTM G 154	(2000ae1) Operating Fluorescent Light Apparatus for UV Exposure of Nonmetallic Materials

1.2 SUBMITTALS

Government approval is required for submittals with a "G" designation;

submittals not having a "G" designation are for information only. When used, a designation following the "G" designation identifies the office that will review the submittal for the Government. The following shall be submitted in accordance with Section 01330 SUBMITTAL PROCEDURES:

SD-02 Shop Drawings

Structural Standing Seam Metal Roof; G AED

Metal roofing drawings and specifications and erection drawings; shop coating and finishing specifications; and other data as necessary to clearly describe design, materials, sizes, layouts, standing seam configuration, construction details, provisions for thermal movement, line of panel fixity, fastener sizes and spacings, sealants and erection procedures. Drawings shall reflect the intent of the architectural detailing using the manufacturer's proprietary products and fabricated items as required. The SSSMR system shop drawings shall be provided by the metal roofing manufacturer.

SD-03 Product Data

Design Analysis; G AED

Design analysis signed by a Registered Professional Engineer employed by the SSSMR manufacturer. The design analysis shall include a list of the design loads, and complete calculations for the support system (when provided by the Contractor), roofing system and its components; valley designs, gutter/downspout calculations, screw pullout test results, and shall indicate how expected thermal movements are accommodated.

Qualifications

Qualifications of the manufacturer and installer.

SD-04 Samples

Accessories

One sample of each type of flashing, trim, closure, thermal spacer block, cap and similar items. Size shall be sufficient to show construction and configuration.

Roof Panels

One piece of each type to be used, 225 mm long, full width.

Factory Color Finish

Three 75 by 125 mm samples of each type and color.

Fasteners

Two samples of each type to be used, with statement regarding intended use. If so requested, random samples of bolts, nuts, and washers as delivered to the job site shall be taken in the presence of the Contracting Officer and provided to the Contracting Officer for testing to establish compliance with

specified requirements.

Insulation

One piece, 300 by 300 mm, of each type and thickness to be used, with a label indicating the rated permeance (if faced) and R-values. The flame spread, and smoke developed rating shall be shown on the label or provided in a letter of certification.

Gaskets and Insulating Compounds

Two samples of each type to be used and descriptive data.

Sealant

One sample, approximately 0.5 kg, and descriptive data.

Concealed Anchor Clips

Two samples of each type used.

Subpurlins

One piece, 225 mm long.

EPDM Rubber Boots

One piece of each type.

SD-06 Test Reports

Wind Uplift Resistance; G AED

The report shall include the following information:

a. Details of the SSSMR system showing the roof panel cross-section with dimensions and thickness.

b. Details of the anchor clip, dimensions, and thickness.

c. Type of fasteners, size, and the number required for each connection.

d. Purlins/subpurlins size and spacing used in the test.

e. Description of the seaming operation including equipment used.

f. Maximum allowable uplift pressures. These pressures are determined from the ultimate load divided by a factor of safety equal to 1.65.

g. Any additional information required to identify the SSSMR system tested.

h. Signature and seal of an independent registered engineer who witnessed the test.

SD-07 Certificates

Structural Standing Seam Metal Roof

a. Certification that the actual thickness of uncoated sheets used in SSSMRS components including roofing panels, subpurlins, and concealed anchor clips complies with specified requirements.

b. Certification that materials used in the installation are mill certified.

c. Previous certification of SSSMR system tested under the Corps of Engineers' Standard Test Method in lieu of ASTM E 1592 testing.

d. Certification that the sheets to be furnished are produced under a continuing quality control program and that a representative sample consisting of not less than three pieces has been tested and has met the quality standards specified for factory color finish.

e. Certification of installer. Installer certification shall be furnished.

f. Warranty certificate. At the completion of the project the Contractor shall furnish signed copies of the 5-year Warranty for Structural Standing Seam Metal Roof (SSSMR) System, a sample copy of which is attached to this section, and the 20-year Manufacturer's Material Warranties, and the manufacturer's 20-year system weathertightness warranty.

Insulation

Certificate attesting that the polyisocyanurate insulation furnished for the project contains recovered material, and showing an estimated percent of such recovered material.

1.3 GENERAL REQUIREMENTS

The Contractor shall furnish a commercially available roofing system which satisfies all requirements contained herein and has been verified by load testing and independent design analyses to meet the specified design requirements.

1.3.1 Structural Standing Seam Metal Roof

The SSSMR system covered under this specification shall include the entire roofing system; the standing seam metal roof panels, fasteners, connectors, roof securement components, and assemblies tested and approved in accordance with ASTM E 1592. In addition, the system shall consist of panel finishes, slip sheet, insulation, vapor retarder, all accessories, components, and trim and all connections with roof panels. This includes roof penetration items such as vents, curbs, skylights; interior or exterior gutters and downspouts; eaves, ridge, hip, valley, rake, gable, wall, or other roof system flashings installed and any other components specified within this contract to provide a weathertight roof system.

1.3.2 Qualifications

1.3.2.1 Manufacturer

The SSSMR system shall be the product of a manufacturer who has been in the practice of manufacturing and designing SSSMR systems for a period of not less than 3 years and has been involved in at least five projects similar in size and complexity to this project.

1.3.2.2 Installer

The installer shall be certified by the SSSMR system manufacturer to have experience in installing at least three projects that are of comparable size, scope and complexity as this project for the particular roof system furnished. The installer may be either employed by the manufacturer or be an independent installer.

1.4 DESIGN ANALYSIS

The design of the SSSMR system shall be provided by the Contractor as a complete system. Members and connections not indicated on the drawings shall be designed by the Contractor. Roof panels, components, transitions, accessories, and assemblies shall be supplied by the same roofing system manufacturer.

1.4.1 Design Criteria

Design criteria shall be in accordance with ASCE 7.

1.4.2 Dead Loads

The dead load shall be the weight of the SSSMR system. Collateral loads such as sprinklers, mechanical and electrical systems, and ceilings shall not be attached to the panels.

1.4.3 Live Loads

1.4.3.1 Concentrated Loads

The panels and anchor clips shall be capable of supporting a 1335 N concentrated load. The concentrated load shall be applied at the panel midspan and will be resisted by a single standing seam metal roof panel assumed to be acting as a beam. The undeformed shape of the panel shall be used to determine the section properties.

1.4.3.2 Uniform Loads

The panels and concealed anchor clips shall be capable of supporting a minimum uniform live load of 960 Pa.

1.4.4 Roof Snow Loads

The design roof snow loads shall be in accordance with ASCE 7.

1.4.5 Wind Loads

The design wind uplift pressure for the roof system shall be as shown on the contract drawings. The design uplift force for each connection assembly shall be that pressure given for the area under consideration,

multiplied by the tributary load area of the connection assembly. The safety factor listed below shall be applied to the design force and compared against the ultimate capacity. Prying shall be considered when figuring fastener design loads.

a. Single fastener in each connection.....3.00

b. Two or more fasteners in each connection...2.25

1.4.6 Thermal Loads

Roof panels shall be free to move in response to the expansion and contraction forces resulting from a total temperature range of 104 degrees C during the life of the structure.

1.4.7 Framing Members Supporting the SSSMR System

Any additions/revisions to framing members supporting the SSSMR system to accommodate the manufacturer/fabricator's design shall be the Contractor's responsibility and shall be submitted for review and approval. New or revised framing members and their connections shall be designed in accordance with AISC 360. Maximum deflection under applied live load, snow, or wind load shall not exceed 1/180 of the span length.

1.4.8 Roof Panels Design

Steel panels shall be designed in accordance with AISI SG-973. Aluminum panels shall be designed in accordance with AA ADM1. The structural section properties used in the design of the panels shall be determined using the unloaded shape of the roof panels. The calculated panel deflection from concentrated loads shall not exceed 1/180 of the span length. The calculated panel deflection under applied live load, snow, or wind load shall not exceed 1/180 times the span length. Deflections shall be based on panels being continuous across three or more supports. Deflection shall be calculated and measured along the major ribs of the panels.

1.4.9 Accessories and Their Fasteners

Accessories and their fasteners shall be capable of resisting the specified design wind uplift forces and shall allow for thermal movement of the roof panel system. Exposed fasteners shall not restrict free movement of the roof panel system resulting from thermal forces. There shall be a minimum of two fasteners per clip. Single fasteners with a minimum diameter of 9 mm will be allowed when the supporting structural members are prepunched or predrilled.

1.5 PERFORMANCE REQUIREMENTS

The SSSMR shall be tested for wind uplift resistance in accordance with ASTM E 1592; SSSMR systems previously tested and approved by the Corps of Engineers' STANDARD TEST METHOD FOR STRUCTURAL PERFORMANCE OF SSMRS BY UNIFORM STATIC AIR PRESSURE DIFFERENCE may be acceptable. Two tests shall be performed. Test 1 shall simulate the edge condition with one end having crosswise restraint and other end free of crosswise restraint. The maximum span length for the edge condition shall be 750 mm. Test 2 shall simulate the interior condition with both ends free of crosswise restraint. The maximum span length for the interior condition shall be 1.5 m. External reinforcement, such as clamps on the ribs, may be installed to improve

uplift resistance. Bolts through seams shall not be installed.

1.6 DELIVERY AND STORAGE

Materials shall be delivered to the site in a dry and undamaged condition and stored out of contact with the ground. Materials shall be covered with weathertight coverings and kept dry. Storage conditions shall provide good air circulation and protection from surface staining.

1.7 WARRANTIES

The SSSMR system shall be warranted as outlined below. Any emergency temporary repairs conducted by the owner shall not negate the warranties.

1.7.1 Contractor's Weathertightness Warranty

The SSSMR system shall be warranted by the Contractor on a no penal sum basis for a period of five years against material and workmanship deficiencies; system deterioration caused by exposure to the elements and/or inadequate resistance to specified service design loads, water leaks, and wind uplift damage. The SSSMR system covered under this warranty shall include the entire roofing system including, but not limited to, the standing seam metal roof panels, fasteners, connectors, roof securement components, and assemblies tested and approved in accordance with ASTM E 1592. In addition, the system shall consist of panel finishes, slip sheet, insulation, vapor retarder, all accessories, components, and trim and all connections with roof panels. This includes roof penetration items such as vents, curbs, and skylights; interior or exterior gutters and downspouts; eaves, ridge, hip, valley, rake, gable, wall, or other roof system flashings installed and any other components specified within this contract to provide a weathertight roof system; and items specified in other sections of these specifications that are part of the SSSMR system. All material and workmanship deficiencies, system deterioration caused by exposure to the elements and/or inadequate resistance to specified design loads, water leaks and wind uplift damage shall be repaired as approved by the Contracting Officer. See the attached Contractor's required warranty for issue resolution of warrantable defects. This warranty shall warrant and cover the entire cost of repair or replacement, including all material, labor, and related markups. The Contractor shall supplement this warranty with written warranties from the installer and system manufacturer, which shall be submitted along with Contractor's warranty; however, the Contractor shall be ultimately responsible for this warranty. The Contractor's written warranty shall be as outlined in attached WARRANTY FOR STRUCTURAL STANDING SEAM METAL ROOF (SSSMR) SYSTEM, and shall start upon final acceptance of the facility. It is required that the Contractor provide a separate bond in an amount equal to the installed total roofing system cost in favor of the owner (Government) covering the Contractor's warranty responsibilities effective throughout the five year Contractor's warranty period for the entire SSSMR system as outlined above.

1.7.2 Manufacturer's Material Warranties.

The Contractor shall furnish, in writing, the following manufacturer's material warranties which cover all SSSMR system components such as roof panels, anchor clips and fasteners, flashing, accessories, and trim, fabricated from coil material:

a. A manufacturer's 20 year material warranty warranting that the aluminum, zinc-coated steel, aluminum-zinc alloy coated steel or

aluminum-coated steel as specified herein will not rupture, structurally fail, fracture, deteriorate, or become perforated under normal design atmospheric conditions and service design loads. Liability under this warranty shall be limited exclusively to the cost of either repairing or replacing nonconforming, ruptured, perforated, or structurally failed coil material.

b. A manufacturer's 20 year exterior material finish warranty on the factory colored finish warranting that the finish, under normal atmospheric conditions at the site, will not crack, peel, or delaminate; chalk in excess of a numerical rating of eight, as determined by ASTM D 4214 test procedures; or change color in excess of five CIE or Hunter Lab color difference (delta E) units in accordance with ASTM D 2244. Liability under this warranty is exclusively limited to refinishing with an air-drying version of the specified finish or replacing the defective coated material.

c. A roofing system manufacturer's 20 year, non-prorated, system weathertightness warranty.

1.8 COORDINATION MEETING

A coordination meeting shall be held 30 days prior to the first submittal, for mutual understanding of the Structural Standing Seam Metal Roof (SSSMR) System contract requirements. This meeting shall take place at the building site and shall include representatives from the Contractor, the roof system manufacturer, the roofing supplier, the erector, the SSSMR design engineer of record, and the Contracting Officer. All items required by paragraph SUBMITTALS shall be discussed, including applicable standard manufacturer shop drawings, and the approval process. The Contractor shall coordinate time and arrangements for the meeting.

PART 2 PRODUCTS

2.1 ROOF PANELS

Panels shall be steel and shall have a factory color finish. Length of sheets shall be sufficient to cover the entire length of any unbroken roof slope for slope lengths that do not exceed 9 m. When length of run exceeds 9 m and panel laps are provided, each sheet in the run shall extend over three or more supports. Sheets longer than 30 m may be furnished if approved by the Contracting Officer. Width of sheets shall provide not more than 600 mm of coverage in place. SSSMR system with roofing panels greater than 300 mm in width shall have standing seams rolled during installation by an electrically driven seaming machine. Height of standing seams shall be not less than 60 mm for rolled seam and 45 mm for seams that are not rolled.

2.1.1 Steel Panels

Steel panels shall be zinc-coated steel conforming to ASTM A 653/A 653M; aluminum-zinc alloy coated steel conforming to ASTM A 792/A 792M, AZ 50 coating; or aluminum-coated steel conforming to ASTM A 463/A 463M, Type 2, coating designation T2 65. Zinc, zinc-aluminum alloy or aluminum coated panels shall be 0.584 mm thick minimum. Panels shall be within 95 percent of reported tested thickness as noted in wind uplift resistance testing required in paragraph PERFORMANCE REQUIREMENTS. Panels that have become wet during shipment and have started to oxidize shall be rejected.

2.2 CONCEALED ANCHOR CLIPS

Concealed anchor clips shall be the same as the tested roofing system. Clip bases shall have factory punched or drilled holes for attachment. Clips shall be made from multiple pieces with the allowance for the total thermal movement required to take place within the clip. Single piece clips may be acceptable when the manufacturer can substantiate that the system can accommodate the thermal cyclic movement under sustained live or snow loads.

2.3 ACCESSORIES

Flashing, trim, metal closure strips, caps and similar metal accessories shall be the manufacturer's standard products. Exposed metal accessories shall be finished to match the panels furnished. Die cast metal closures shall be installed with double bead tape sealant and fasteners that stitch the panel to a 2 mm preformed backer plate to ensure a positive compression of the tape sealant. The use of a continuous angle butted to the panel ends to form a closure will not be allowed.

2.4 FASTENERS

Fasteners for steel roof panels shall be zinc-coated steel, aluminum, corrosion resisting steel, or nylon capped steel, type and size specified below or as otherwise approved for the applicable requirements. Fasteners for aluminum roof panels shall be aluminum or corrosion resisting steel. Fasteners for structural connections shall provide both tensile and shear ultimate strengths of not less than 3340 N per fastener. Fasteners for accessories shall be the manufacturer's standard. Exposed roof fasteners shall be sealed or have sealed washers on the exterior side of the roof to waterproof the fastener penetration. Washer material shall be compatible with the roofing; have a minimum diameter of 10 mm for structural connections; and gasketed portion of fasteners or washers shall be neoprene or other equally durable elastomeric material approximately 3 mm thick. Exposed fasteners for factory color finished panels shall be factory finished to match the color of the panels.

2.4.1 Screws

Screws for attaching anchor devices shall be not less than No. 14. Actual screw pull out test results shall be performed for the actual material gage and yield strength of the structural purlins or subpurlins to which the clip is to be anchored/attached. Other screws shall be as recommended by the manufacturer to meet the strength design requirements of the panels.

2.4.2 Bolts

Bolts shall be not less than 6 mm diameter, shouldered or plain shank as required, with locking washers and nuts.

2.4.3 Structural Blind Fasteners

Blind screw-type expandable fasteners shall be not less than 6 mm diameter. Blind (pop) rivets shall be not less than 7 mm minimum diameter.

2.5 SUBPURLINS

Cold formed supporting structural members/subpurlins shall have a minimum thickness of 1.5 mm and a minimum tensile yield strength of 345 MPa. Hot

rolled structural members shall have a minimum thickness of 6 mm and a minimum tensile yield strength of 248 MPa. Subpurlins shall be shop painted.

2.6 FACTORY COLOR FINISH

Panels shall have a factory applied polyvinylidene fluoride finish on the exposed side. The exterior finish shall consist of a baked-on topcoat with an appropriate prime coat. Color shall match the color indicated in Section 09 06 90 COLOR SCHEDULE. The exterior coating shall be a nominal 0.050 mm thickness consisting of a topcoat of not less than 0.018 mm dry film thickness and the paint manufacturer's recommended primer of not less than 0.005 mm thickness. The interior color finish shall consist of the same coating and dry film thickness as the exterior a nominal 0.025 mm thick finish otherwise the same as the exterior, 0.005 mm thick prime coat. The exterior color finish shall meet the test requirements specified below.

2.6.1 Salt Spray Test

A sample of the sheets shall withstand a cyclic corrosion test for a minimum of 2016 hours in accordance with ASTM D 5894, including the scribe requirement in the test. Immediately upon removal of the panel from the test, the coating shall receive a rating of not less than 10, no blistering, as determined by ASTM D 714; 10, no rusting, as determined by ASTM D 610; and a rating of 6, over 2 0 to 3.0 mm failure at scribe, as determined by ASTM D 1654.

2.6.2 Formability Test

When subjected to testing in accordance with ASTM D 522 Method B, 3 mm diameter mandrel, the coating film shall show no evidence of cracking to the naked eye.

2.6.3 Accelerated Weathering, Chalking Resistance and Color Change

A sample of the sheets shall be tested in accordance with ASTM G 154, test condition UVA-340 lamp, 8h UV at 60 degrees C followed by 4h CON at 45 degrees C] for 12 total hours. The coating shall withstand the weathering test without cracking, peeling, blistering, loss of adhesion of the protective coating, or corrosion of the base metal. Protective coating with an adhesion rating less than 4B when tested in accordance with ASTM D 3359, Test Method B, shall be considered as an area indicating loss of adhesion. Following the accelerated weathering test, the coating shall have a chalk rating not less than No. 8 in accordance with ASTM D 4214 test procedures, and the color change shall not exceed 5 CIE or Hunter Lab color difference (delta E) units in accordance with ASTM D 2244.

2.6.4 Humidity Test

When subjected to a humidity cabinet test in accordance with ASTM D 2247 for 1000 hours, a scored panel shall show no signs of blistering, cracking, creepage or corrosion.

2.6.5 Impact Resistance

Factory-painted sheet shall withstand direct and reverse impact in accordance with ASTM D 2794 13 mm diameter hemispherical head indenter, equal to 6.7 times the metal thickness in mm, expressed in Newton-meters, with no cracking.

2.6.6 Abrasion Resistance Test

When subjected to the falling sand test in accordance with ASTM D 968, Method A, the coating system shall withstand a minimum of 80 liters of sand before the appearance of the base metal. The term "appearance of base metal" refers to the metallic coating on steel or the aluminum base metal.

2.6.7 Specular Gloss

Finished roof surfaces shall have a specular gloss value of 10 or less at an angle of 85 degrees when measured in accordance with ASTM D 523.

2.6.8 Pollution Resistance

Coating shall show no visual effects when covered spot tested in a 10 percent hydrochloric acid solution for 24 hours in accordance with ASTM D 1308.

2.7 INSULATION

Thermal resistance of insulation shall be not less than the R-values shown on the contract drawings. R-values shall be R=3.5 sq m - C/Watt (R=20) for walls; and R=5.5 sq m - C/Watt (R=30) for roofs. Insulation shall be a standard product with the insulation manufacturer, factory marked or identified with insulation manufacturer's name or trademark and R-value. Identification shall be on individual pieces or individual packages. Blanket insulation shall have a facing as specified in paragraph VAPOR RETARDER. Insulation, including facings, shall have a flame spread not in excess of 75 and a smoke developed rating not in excess of 150 when tested in accordance with ASTM E 84. The stated R-value of the insulation shall be certified by an independent Registered Professional Engineer if tests are conducted in the insulation manufacturer's laboratory. Contractor shall comply with EPA requirements in accordance with Section 01 62 35 RECYCLED / RECOVERED MATERIALS.

2.7.1 Polyisocyanurate Rigid Board Insulation

Polyisocyanurate insulation for use above a roof deck shall conform to ASTM C 1289, Type II, (having a minimum recovered material content of 85 percent by weight of core material in the polyisocyanurate portion). For impermeable faced polyisocyanurate (Ex: aluminum foil), the maximum design R-value per 25 mm of insulation used shall be 1.27. Facings shall be non-asphaltic, glass fiber reinforced.

2.7.2 Blanket Insulation

Blanket insulation shall conform to ASTM C 991.

2.7.3 Glass Mat Gypsum Roof Board

Glass mat gypsum roof board for use above the deck or insulation for thermal protection shall have a flame spread - 0, smoke developed - 0, shall be water resistant and have a compressive strength of 3.4 kPa. Glass mat gypsum roof board shall conform to ASTM C 1177/C 1177M.

2.8 INSULATION RETAINERS

Insulation retainers shall be type, size, and design necessary to

adequately hold the insulation and to provide a neat appearance. Metallic retaining members shall be nonferrous or have a nonferrous coating. Nonmetallic retaining members, including adhesives used in conjunction with mechanical retainers or at insulation seams, shall have a fire resistance classification not less than that permitted for the insulation.

2.9 SEALANT

Sealants shall be elastomeric type containing no oil or asphalt. Exposed sealant shall be colored to match the applicable building color and shall cure to a rubberlike consistency. Sealant placed in the roof panel standing seam ribs shall be provided in accordance with the manufacturer's recommendations.

2.10 GASKETS AND INSULATING COMPOUNDS

Gaskets and insulating compounds shall be nonabsorptive and suitable for insulating contact points of incompatible materials. Insulating compounds shall be nonrunning after drying.

2.11 VAPOR RETARDER

2.11.1 Vapor Retarders as Integral Facing

Insulation facing shall have a permeability of 5.7 ng per Pa-second-square meter or less when tested in accordance with ASTM E 96/E 96M. Facing shall be white. Facings and finishes shall be factory applied.

2.11.2 Vapor Retarders Separate from Insulation

Vapor retarder material shall be polyethylene sheeting conforming to ASTM D 4397. A single ply of 0.25 mm polyethylene sheet; or, at the Contractor's option, a double ply of 0.15 mm polyethylene sheet shall be used. A fully compatible polyethylene tape which has equal or better water vapor control characteristics than the vapor retarder material shall be provided. A cloth industrial duct tape in a utility grade shall also be provided to use as needed to protect the vapor retarder from puncturing.

2.11.3 Slip Sheet for Use With Vapor Retarder

Slip sheet for use with vapor retarder shall be a 0.24 kg per square meter rosin-sized, unsaturated building paper.

2.12 EPDM RUBBER BOOTS

Flashing devices around pipe penetrations shall be flexible, one-piece devices molded from weather-resistant EPDM rubber. Rubber boot material shall be as recommended by the manufacturer. The boots shall have base rings made of aluminum or corrosion resisting steel that conform to the contours of the roof panel to form a weather-tight seal.

2.13 PREFABRICATED CURBS AND EQUIPMENT SUPPORTS

Prefabricated curbs and equipment supports shall be of structural quality, hot-dipped galvanized or galvanized sheet steel, factory primed and prepared for painting with mitered and welded joints. Integral base plates and water diverter crickets shall be provided. Minimum height of curb shall be 200 mm above finish roof. Curbs shall be constructed to match roof slope and to provide a level top surface for mounting of equipment.

Curb flange shall be constructed to match configuration of roof panels. Curb size shall be coordinated, prior to curb fabrication, with the mechanical equipment to be supported. Strength requirements for equipment supports shall be coordinated to include all anticipated loads. Flashings shall not be rigidly attached to underline structure.

PART 3 EXECUTION

3.1 INSTALLATION

Installation shall be in accordance with the manufacturer's erection instructions and drawings. Dissimilar materials which are not compatible when contacting each other shall be insulated by means of gaskets or insulating compounds. Molded closure strips shall be installed wherever roofing sheets terminate in open-end configurations, exclusive of flashings. The closure strip installation shall be weather-tight and sealed. Screws shall be installed with a clutching screw gun, to assure screws are not stripped. Field test shall be conducted on each gun prior to starting installation and periodically thereafter to assure it is adjusted properly to install particular type and size of screw as recommended by manufacturer's literature. Improper or mislocated drill holes shall be plugged with an oversize screw fastener and gasketed washer; however, sheets with an excess of such holes or with such holes in critical locations shall not be used. Exposed surfaces and edges shall be kept clean and free from sealant, metal cuttings, hazardous burrs, and other foreign material. Stained, discolored, or damaged sheets shall be removed from the site.

3.1.1 Field Forming of Panels for Unique Area

When roofing panels are formed from factory-color-finished steel coils at the project site, the same care and quality control measures that are taken in shop forming of roofing panels shall be observed. Rollformer shall be operated by the metal roofing manufacturer's representative. In cold weather conditions, preheating of the steel coils to be field formed shall be performed as necessary just prior to the rolling operations.

3.1.2 Subpurlins

Unless otherwise shown, subpurlins shall be anchored to the purlins or other structural framing members with bolts or screws. Attachment to the substrate (when provided) or to the panels is not permitted. The subpurlin spacing shall not exceed 750 mm on centers at the corner, edge and ridge zones, and 1500 mm maximum on centers for the remainder of the roof. Corner, edge, and ridge zones are as defined in ASCE 7.

3.1.3 Roof Panel Installation

Roof panels shall be installed with the standing seams in the direction of the roof slope. The side seam connections for installed panels shall be completed at the end of each day's work. Method of applying joint sealant shall conform to the manufacturer's recommendation to achieve a complete weather-tight installation. End laps of panels shall be provided in accordance with the manufacturer's instructions. Closures, flashings, EPDM rubber boots, roof curbs, and related accessories shall be installed according to the manufacturer's drawings. Fasteners shall not puncture roofing sheets except as provided for in the manufacturer's instructions for erection and installation. Expansion joints for the standing seam roof system shall be installed at locations indicated on the contract drawings

and other locations indicated on the manufacturer's drawings.

3.1.4 Concealed Anchor Clips

Concealed anchor clips shall be fastened directly to the structural framing members. Attachment to the substrate (when provided) or to the metal deck is not permitted. The maximum distance, parallel to the seams, between clips shall be 750 mm on center at the corner, edge, and ridge zones, and 1500 mm maximum on centers for the remainder of the roof.

3.2 INSULATION INSTALLATION

Insulation shall be continuous over entire roof surface. Where expansion joints, terminations, and other connections are made, the cavity shall be filled with batt insulation with vapor retarder providing equivalent R-value and perm rating as remaining insulation. Insulation shall be installed as indicated and in accordance with manufacturer's instructions.

3.2.1 Blanket Insulation

Blanket insulation shall be installed between and parallel to the purlins with tabs of a facer lapping on the top face of the purlins. Thermal blocks shall be provided over purlins, between clips. A second layer of unfaced insulation shall be added between purlins to provide full R-value. Blanket insulation shall be supported by an integral facing or other commercially available support system.

3.3 PROTECTION OF VAPOR RETARDER FROM ROOF DECK

A cloth industrial duct tape shall be applied over the seams of metal roof decks, at penetration edges, and at surface areas exhibiting sharp burrs or similar protrusions. For other types of roof decks, cloth industrial duct tape shall be applied over irregularities which could potentially puncture polyethylene membrane.

3.4 VAPOR RETARDER INSTALLATION

3.4.1 Integral Facing on Blanket Insulation

Integral facing on blanket insulation shall have the facing lapped and sealed with a compatible tape to provide a vapor tight membrane.

3.5 SLIP SHEET INSTALLATION

A slip sheet shall be laid over the blanket insulation facing to prevent the vinyl facing from adhering to the metal roofing.

3.6 CLEANING AND TOUCH-UP

Exposed SSSMR systems shall be cleaned at completion of installation. Debris that could cause discoloration and harm to the panels, flashings, closures and other accessories shall be removed. Grease and oil films, excess sealants, and handling marks shall be removed and the work shall be scrubbed clean. Exposed metal surfaces shall be free of dents, creases, waves, scratch marks, and solder or weld marks. Immediately upon detection, abraded or corroded spots on shop-painted surfaces shall be wire brushed and touched up with the same material used for the shop coat. Factory color finished surfaces shall be touched up with the manufacturer's recommended touch up paint.

CONTRACTOR'S FIVE (5) YEAR NO PENAL SUM WARRANTY
FOR
STRUCTURAL STANDING SEAM METAL ROOF (SSSMR) SYSTEM

FACILITY DESCRIPTION_____

BUILDING NUMBER:_____

CORPS OF ENGINEERS CONTRACT NUMBER:_____

CONTRACTOR

CONTRACTOR:_____

ADDRESS:_____

POINT OF CONTACT:_____

TELEPHONE NUMBER:_____

OWNER

OWNER:_____

ADDRESS:_____

POINT OF CONTACT:_____

TELEPHONE NUMBER:_____

CONSTRUCTION AGENT

CONSTRUCTION AGENT:_____

ADDRESS:_____

POINT OF CONTACT:_____

TELEPHONE NUMBER:_____

CONTRACTOR'S FIVE (5) YEAR NO PENAL SUM WARRANTY
FOR
STRUCTURAL STANDING SEAM METAL ROOF (SSSMR) SYSTEM
(continued)

THE SSSMR SYSTEM INSTALLED ON THE ABOVE NAMED BUILDING IS WARRANTED BY _____ FOR A PERIOD OF FIVE (5) YEARS AGAINST WORKMANSHIP AND MATERIAL DEFICIENCES, WIND DAMAGE, STRUCTURAL FAILURE, AND LEAKAGE. THE SSSMR SYSTEM COVERED UNDER THIS WARRANTY SHALL INCLUDE, BUT SHALL NOT BE LIMITED TO, THE FOLLOWING: THE ENTIRE ROOFING SYSTEM, MANUFACTURER SUPPLIED FRAMING AND STRUCTURAL MEMBERS, METAL ROOF PANELS, FASTENERS, CONNECTORS, ROOF SECUREMENT COMPONENTS, AND ASSEMBLIES TESTED AND APPROVED IN ACCORDANCE WITH ASTM E 1592. IN ADDITION, THE SYSTEM PANEL FINISHES, SLIP SHEET, INSULATION, VAPOR RETARDER, ALL ACCESSORIES, COMPONENTS, AND TRIM AND ALL CONNECTIONS ARE INCLUDED. THIS INCLUDES ROOF PENETRATION ITEMS SUCH AS VENTS, CURBS, SKYLIGHTS; INTERIOR OR EXTERIOR GUTTERS AND DOWNSPOUTS; EAVES, RIDGE, HIP, VALLEY, RAKE, GABLE, WALL, OR OTHER ROOF SYSTEM FLASHINGS INSTALLED AND ANY OTHER COMPONENTS SPECIFIED WITHIN THIS CONTRACT TO PROVIDE A WEATHERTIGHT ROOF SYSTEM; AND ITEMS SPECIFIED IN OTHER SECTIONS OF THE SPECIFICATIONS THAT ARE PART OF THE SSSMR SYSTEM.

ALL MATERIAL DEFICIENCIES, WIND DAMAGE, STRUCTURAL FAILURE, AND LEAKAGE ASSOCIATED WITH THE SSSMR SYSTEM COVERED UNDER THIS WARRANTY SHALL BE REPAIRED AS APPROVED BY THE CONTRACTING OFFICER. THIS WARRANTY SHALL COVER THE ENTIRE COST OF REPAIR OR REPLACEMENT, INCLUDING ALL MATERIAL, LABOR, AND RELATED MARKUPS. THE ABOVE REFERENCED WARRANTY COMMENCED ON THE DATE OF FINAL ACCEPTANCE ON _____ AND WILL REMAIN IN EFFECT FOR STATED DURATION FROM THIS DATE.

SIGNED, DATED, AND NOTARIZED (BY COMPANY PRESIDENT)

_____

(Company President) (Date)

CONTRACTOR'S FIVE (5) YEAR NO PENAL SUM WARRANTY
FOR
STRUCTURAL STANDING SEAM METAL ROOF (SSSMR) SYSTEM
(continued)

THE CONTRACTOR SHALL SUPPLEMENT THIS WARRANTY WITH WRITTEN WARRANTIES FROM THE MANUFACTURER AND/OR INSTALLER OF THE SSSMR SYSTEM, WHICH SHALL BE SUBMITTED ALONG WITH THE CONTRACTOR'S WARRANTY. HOWEVER, THE CONTRACTOR WILL BE ULTIMATELY RESPONSIBLE FOR THIS WARRANTY AS OUTLINED IN THE SPECIFICATIONS AND AS INDICATED IN THIS WARRANTY EXAMPLE.

EXCLUSIONS FROM COVERAGE

1. NATURAL DISASTERS, ACTS OF GOD (LIGHTNING, FIRE, EXPLOSIONS, SUSTAINED WIND FORCES IN EXCESS OF THE DESIGN CRITERIA, EARTHQUAKES, AND HAIL).

2. ACTS OF NEGLIGENCE OR ABUSE OR MISUSE BY GOVERNMENT OR OTHER PERSONNEL, INCLUDING ACCIDENTS, VANDALISM, CIVIL DISOBEDIENCE, WAR, OR DAMAGE CAUSED BY FALLING OBJECTS.

3. DAMAGE BY STRUCTURAL FAILURE, SETTLEMENT, MOVEMENT, DISTORTION, WARPAGE, OR DISPLACEMENT OF THE BUILDING STRUCTURE OR ALTERATIONS MADE TO THE BUILDING.

4. CORROSION CAUSED BY EXPOSURE TO CORROSIVE CHEMICALS, ASH OR FUMES GENERATED OR RELEASED INSIDE OR OUTSIDE THE BUILDING FROM CHEMICAL PLANTS, FOUNDRIES, PLATING WORKS, KILNS, FERTILIZER FACTORIES, PAPER PLANTS, AND THE LIKE.

5. FAILURE OF ANY PART OF THE SSSMR SYSTEM DUE TO ACTIONS BY THE OWNER TO INHIBIT FREE DRAINAGE OF WATER FROM THE ROOF AND GUTTERS AND DOWNSPOUTS OR ALLOW PONDING WATER TO COLLECT ON THE ROOF SURFACE. CONTRACTOR'S DESIGN SHALL INSURE FREE DRAINAGE FROM THE ROOF AND NOT ALLOW PONDING WATER.

6. THIS WARRANTY APPLIES TO THE SSSMR SYSTEM. IT DOES NOT INCLUDE ANY CONSEQUENTIAL DAMAGE TO THE BUILDING INTERIOR OR CONTENTS WHICH IS COVERED BY THE WARRANTY OF CONSTRUCTION CLAUSE INCLUDED IN THIS CONTRACT.

7. THIS WARRANTY CANNOT BE TRANSFERRED TO ANOTHER OWNER WITHOUT WRITTEN CONSENT OF THE CONTRACTOR; AND THIS WARRANTY AND THE CONTRACT PROVISIONS WILL TAKE PRECEDENCE OVER ANY CONFLICTS WITH STATE STATUTES.

**

CONTRACTOR'S FIVE (5) YEAR NO PENAL SUM WARRANTY
FOR
STRUCTURAL STANDING SEAM METAL ROOF (SSSMR) SYSTEM
(continued)

**REPORTS OF LEAKS AND SSSMR SYSTEM DEFICIENCIES SHALL BE RESPONDED TO WITHIN 48 HOURS OF RECEIPT OF NOTICE, BY TELEPHONE OR IN WRITING, FROM EITHER THE OWNER OR CONTRACTING OFFICER. EMERGENCY REPAIRS TO PREVENT FURTHER ROOF LEAKS SHALL BE INITIATED IMMEDIATELY; A WRITTEN PLAN SHALL BE SUBMITTED FOR APPROVAL TO REPAIR OR REPLACE THIS SSSMR SYSTEM WITHIN SEVEN (7) CALENDAR DAYS. ACTUAL WORK FOR PERMANENT REPAIRS OR REPLACEMENT SHALL BE STARTED WITHIN 30 DAYS AFTER RECEIPT OF NOTICE, AND COMPLETED WITHIN A REASONABLE TIME FRAME. IF THE CONTRACTOR FAILS TO ADEQUATELY RESPOND TO THE WARRANTY PROVISIONS, AS STATED IN THE CONTRACT AND AS CONTAINED HEREIN, THE CONTRACTING OFFICER MAY HAVE THE SSSMR SYSTEM REPAIRED OR REPLACED BY OTHERS AND CHARGE THE COST TO THE CONTRACTOR.

IN THE EVENT THE CONTRACTOR DISPUTES THE EXISTENCE OF A WARRANTABLE DEFECT, THE CONTRACTOR MAY CHALLENGE THE OWNER'S DEMAND FOR REPAIRS AND/OR REPLACEMENT DIRECTED BY THE OWNER OR CONTRACTING OFFICER EITHER BY REQUESTING A CONTRACTING OFFICER'S DECISION UNDER THE CONTRACT DISPUTES ACT, OR BY REQUESTING THAT AN ARBITRATOR RESOLVE THE ISSUE. THE REQUEST FOR AN ARBITRATOR MUST BE MADE WITHIN 48 HOURS OF BEING NOTIFIED OF THE DISPUTED DEFECTS. UPON BEING INVOKED, THE PARTIES SHALL, WITHIN TEN (10) DAYS, JOINTLY REQUEST A LIST OF FIVE (5) ARBITRATORS FROM THE FEDERAL MEDIATION AND CONCILIATION SERVICE. THE PARTIES SHALL CONFER WITHIN TEN (10) DAYS AFTER RECEIPT OF THE LIST TO SEEK AGREEMENT ON AN ARBITRATOR. IF THE PARTIES CANNOT AGREE ON AN ARBITRATOR, THE CONTRACTING OFFICER AND THE PRESIDENT OF THE CONTRACTOR'S COMPANY WILL STRIKE ONE (1) NAME FROM THE LIST ALTERNATIVELY UNTIL ONE (1) NAME REMAINS. THE REMAINING PERSON SHALL BE THE DULY SELECTED ARBITRATOR. THE COSTS OF THE ARBITRATION, INCLUDING THE ARBITRATOR'S FEE AND EXPENSES, COURT REPORTER, COURTROOM OR SITE SELECTED, ETC., SHALL BE BORNE EQUALLY BETWEEN THE PARTIES. EITHER PARTY DESIRING A COPY OF THE TRANSCRIPT SHALL PAY FOR THE TRANSCRIPT. A HEARING WILL BE HELD AS SOON AS THE PARTIES CAN MUTUALLY AGREE. A WRITTEN ARBITRATOR'S DECISION WILL BE REQUESTED NOT LATER THAN 30 DAYS FOLLOWING THE HEARING. THE DECISION OF THE ARBITRATOR WILL NOT BE BINDING; HOWEVER, IT WILL BE ADMISSIBLE IN ANY SUBSEQUENT APPEAL UNDER THE CONTRACT DISPUTES ACT.

A FRAMED COPY OF THIS WARRANTY SHALL BE POSTED IN THE MECHANICAL ROOM OR OTHER APPROVED LOCATION DURING THE ENTIRE WARRANTY PERIOD.

-- End of Section --

SECTION 07600

SHEET METALWORK, GENERAL

PART 1 GENERAL

1.1 REFERENCES

The publications listed below form a part of this specification to the extent referenced. The publications are referred to in the text by basic designation only.

ASTM INTERNATIONAL (ASTM)

ASTM D 543	(1995) Evaluating the Resistance of Plastics to Chemical Reagents
ASTM D 822	(1996) Conducting Tests on Paint and Related Coatings and Materials Using Filtered Open-Flame Carbon-Arc Exposure Apparatus
ASTM D 828	(1997) Tensile Properties of Paper and Paperboard Using Constant-Rate-of-Elongation-Apparatus
ASTM E 96	(2000e1) Water Vapor Transmission of Materials

SHEET METAL AND AIR CONDITIONING CONTRACTORS' NATIONAL ASSOCIATION (SMACNA)

SMACNA Arch. Manual	(1993; Errata; Addenda Oct 1997) Architectural Sheet Metal Manual

1.2 GENERAL REQUIREMENTS

Sheet metalwork shall be accomplished to form weathertight construction without waves, warps, buckles, fastening stresses or distortion, and shall allow for expansion and contraction. Cutting, fitting, drilling, and other operations in connection with sheet metal required to accommodate the work of other trades shall be performed by sheet metal mechanics. Installation of sheet metal items used in conjunction with roofing shall be coordinated with roofing work to permit continuous roofing operations. Sheet metalwork pertaining to heating, ventilating, and air conditioning is specified in Division 15 section.

1.3 SUBMITTALS

Government approval is required for submittals with a "G" designation; submittals not having a "G" designation are for information only. When used, a designation following the "G" designation identifies the office that will review the submittal for the Government. Submit the following in accordance with Section 01330 SUBMITTAL PROCEDURES:

SD-02 Shop Drawings

Covering on flat, sloped, or curved surfaces; G AED

Gutters; G AED

Downspouts; G AED

Expansion joints; G AED

Gravel stops and fascias; G AED

Splash pans; G AED

Flashing for roof drains; G AED

Base flashing; G AED

Counterflashing; G AED

Flashing at roof penetrations; G AED

Reglets; G AED

Scuppers; G AED

Copings; G AED

Drip edge; G AED

Conductor heads

Open valley flashing; G AED

Eave flashing; G AED

Indicate thicknesses, dimensions, fastenings and anchoring methods, expansion joints, and other provisions necessary for thermal expansion and contraction. Scaled manufacturer's catalog data may be submitted for factory fabricated items.

1.4 DELIVERY, STORAGE, AND HANDLING

Materials shall be adequately packaged and protected during shipment and shall be inspected for damage, dampness, and wet-storage stains upon delivery to the jobsite. Materials shall be clearly labeled as to type and manufacturer. Sheet metal items shall be carefully handled to avoid damage. Materials shall be stored in dry, ventilated areas until immediately before installation.

PART 2 PRODUCTS

2.1 MATERIALS

Lead, and lead-coated metal shall not be used. Any metal listed by SMACNA Arch. Manual for a particular item may be used, unless otherwise specified or indicated. Materials shall conform to the requirements specified below and to the thicknesses and configurations established in SMACNA Arch. Manual. Different items need not be of the same metal, except that if copper is selected for any exposed item, all exposed items shall be

copper.

Acceptable materials for flashing include, but are not limited to:

1. Galvanized steel.
2. Stainless steel.
3. Copper.
4. Aluminum.
5. Zinc.

2.1.1 Accessories

Accessories and other items essential to complete the sheet metal installation, though not specifically indicated or specified, shall be provided.

2.1.2 Sealant

Unless otherwise specified, sealant shall be an elastomeric weather resistant sealant as specified in Section 07900 JOINT SEALING.

2.1.3 Fasteners

Fasteners shall be compatible with the fastened material and shall be the type best suited for the application.

2.1.4 Felt

Asphalt saturated, organic felt, Type I.

2.1.5 Stainless Steel

Type 302 or 304; fully annealed, dead soft temper.

2.1.6 Solder

95-5 tin-antimony.

2.1.7 Through-Wall Flashing

a. Stainless steel, Type 304, not less than 0.25 mm thick, completely encased by and permanently bonded on both sides to 23 kg high strength bituminized crepe kraft paper, using hot asphalt, heat, and pressure.

b. Nonreinforced, waterproof, impermeable extruded elastomeric single ply sheeting not less than 0.76 mm thick.

c. Other through-wall flashing material may be used provided the following performance criteria are met.

(1) No cracking or flaking when bent 180 degrees over a 0.8 mm mandrel and rebent at the same point over the same mandrel in an opposite direction at 0 degree C .

(2) Water vapor permeability not more than 115 ng per Paper second per square meter (2 perms) when tested in accordance with ASTM E 96.

(3) Minimum breaking strength of 24 kgf/15 mm width in the weakest direction when tested in accordance with ASTM D 828.

(4) No visible deterioration after being subjected to a 400-hour direct weathering test in accordance with ASTM D 822.

(5) No shrinkage in length or width and less than 5 percent loss of breaking strength after a 10-day immersion, per ASTM D 543, in 5 percent (by weight) solutions, respectively, of sulfuric acid, hydrochloric acid, sodium hydroxide or saturated lime (calcium hydroxide).

PART 3 EXECUTION

3.1 GENERAL REQUIREMENTS

Gutters and downspouts shall be designed and fabricated in conformance with SMACNA Arch. Manual;and louvers shall be fabricated in conformance with SMACNA Arch. Manual and as indicated. Unless otherwise specified or indicated, exposed edges shall be folded back to form a 13 mm (1/2 inch) hem on the concealed side, and bottom edges of exposed vertical surfaces shall be angled to form drips. Bituminous cement shall not be placed in contact with roofing membranes other than built-up roofing.

3.2 EXPANSION JOINTS

Expansion joints shall be provided as specified in SMACNA Arch. Manual. Expansion joints in continuous sheet metal shall be provided at 12.0 meter intervals for stainless steel. Joints shall be evenly spaced. An additional joint shall be provided where the distance between the last expansion joint and the end of the continuous run is more than half the required interval spacing.

3.3 PROTECTION OF ALUMINUM

Aluminum shall not be used where it will be in contact with copper or where it will contact water which flows over copper surfaces.

3.3.1 Paint

Aluminum surfaces shall be solvent cleaned and given one coat of zinc-molybdate primer and one coat of aluminum paint as specified in Section 09900 PAINTING, GENERAL.

3.3.2 Nonabsorptive Tape or Gasket

Nonabsorptive tape or gasket shall be placed between the adjoining surfaces and cemented to the aluminum surface using a cement compatible with aluminum.

3.4 CONNECTIONS AND JOINTING

3.4.1 Soldering

Soldering shall apply to copper, and stainless steel items. Edges of sheet metal shall be pretinned before soldering is begun. Soldering shall be done slowly with well heated soldering irons so as to thoroughly heat the seams and completely sweat the solder through the full width of the seam. Edges of stainless steel to be pretinned shall be treated with soldering

acid flux. Soldering shall follow immediately after application of the flux. Upon completion of soldering, the acid flux residue shall be thoroughly cleaned from the sheet metal with a water solution of washing soda and rinsed with clean water.

3.4.2 Riveting

Joints in aluminum sheets 1.0 mm or less in thickness shall be mechanically made.

3.4.3 Seaming

Flat-lock and soldered-lap seams shall finish not less than 25 mm wide. Unsoldered plain-lap seams shall lap not less than 75 mm unless otherwise specified. Flat seams shall be made in the direction of the flow.

3.5 CLEATS

A continuous cleat shall be provided where indicated or specified to secure loose edges of the sheet metalwork. Butt joints of cleats shall be spaced approximately 3 mm apart. The cleat shall be fastened to supporting wood construction with nails evenly spaced not over 300 mm on centers. Where the fastening is to be made to concrete or masonry, screws shall be used and shall be driven in expansion shields set in concrete or masonry.

3.6 GUTTERS AND DOWNSPOUTS

Gutters and downspouts shall be installed as indicated. Gutters shall be supported by continuous cleats or by cleats spaced not less than 915 mm (36 inches) apart. Downspouts shall be rigidly attached to the building. Supports for downspouts shall be spaced according to manufacturer's recommendations.

3.7 FLASHINGS

Flashings shall be installed at locations indicated and as specified below. Sealing shall be according to the flashing manufacturer's recommendations. Flashings shall be installed at intersections of roof with vertical surfaces and at projections through roof, except that flashing for heating and plumbing, including piping, roof, and floor drains, and for electrical conduit projections through roof or walls are specified in other sections. Except as otherwise indicated, counter flashings shall be provided over base flashings. Perforations in flashings made by masonry anchors shall be covered up by an application of bituminous plastic cement at the perforation. Flashing shall be installed on top of joint reinforcement. Flashing shall be formed to direct water to the outside of the system.

3.7.1 Through-Wall Flashing

Through-wall flashing includes sill, lintel, and spandrel flashing. The flashing shall be laid with a layer of mortar above and below the flashing so that the total thickness of the two layers of the mortar and flashing are the same thickness as the regular mortar joints. Flashing shall not extend further into the masonry backup wall than the first mortar joint. Joints in flashing shall be lapped and sealed. Flashing shall be one piece for lintels and sills.

3.7.1.1 Lintel Flashing

Lintel flashing shall extend the full length of lintel. Flashing shall extend through the wall one masonry course above the lintels and shall be bent down over the vertical leg of the outer steel lintel angle not less than 50 mm, or shall be applied over top of masonry and precast concrete lintels. Bedjoints of lintels at control joints shall be underlaid with sheet metal bond breaker.

3.7.1.2 Sill Flashing

Sill flashing shall extend the full width of the sill and not less than 100 mm beyond ends of sill except at control joint where the flashing shall be terminated at the end of the sill.

3.8 SCUPPERS

Parapet Scuppers: Fabricate scuppers of dimensions required with closure flange trim to exterior, 100-mm- wide wall flanges to interior, and base extending 100 mm beyond cant or tapered strip into field of roof. Fasten gravel guard angles to base of scupper. Scuppers shall be made with minimum 0.8 mm thick material.

3.9 INSTALLATION OF LOUVERS

Louvers shall be rigidly attached to the supporting construction. The installation shall be rain-tight. Louver screen shall be installed as indicated.

3.10 CONTRACTOR QUALITY CONTROL

The Contractor shall establish and maintain a quality control procedure for sheet metal used in conjunction with roofing to assure compliance of the installed sheet metalwork with the contract requirements. Any work found not to be in compliance with the contract shall be promptly removed and replaced or corrected in an approved manner. Quality control shall include, but not be limited to, the following:

a. Observation of environmental conditions; number and skill level of sheet metal workers; condition of substrate.

b. Verification of compliance of materials before, during, and after installation.

c. Inspection of sheet metalwork for proper size and thickness, fastening and joining, and proper installation.

The actual quality control observations and inspections shall be documented and a copy of the documentation furnished to the Government at the end of each day.

-- End of Section --

SECTION 07720

RIDGE VENTS AND ROOF VENTILATORS

PART 1 GENERAL

1.1 REFERENCES

The publications listed below form a part of this specification to the extent referenced. The publications are referred to in the text by basic designation only.

ASTM INTERNATIONAL (ASTM)

ASTM A 653/A 653M	(2001a) Steel Sheet, Zinc-Coated (Galvanized) or Zinc-Iron Alloy-Coated (Galvannealed) by the Hot-Dip Process

SHEET METAL AND AIR CONDITIONING CONTRACTORS' NATIONAL ASSOCIATION (SMACNA)

SMACNA Arch. Manual	(1993; Errata; Addenda Oct 1997) Architectural Sheet Metal Manual

1.2 SUBMITTALS

Government approval is required for submittals with a "G" designation; submittals not having a "G" designation are for information only. When used, a designation following the "G" designation identifies the office that will review the submittal for the Government. The following shall be submitted in accordance with Section 01330 SUBMITTAL PROCEDURES:

SD-02 Shop Drawings

Roof Ventilators; G AED

Dimensioned drawings indicating location of each type of ventilator including details of construction, gauges of metal, and methods of operation of dampers and controls.

1.3 DESIGN REQUIREMENTS

Ventilators shall be designed for use with the specific type of project roofing system, and shall provide uniform and continuous air flow. Ventilator design shall provide protection against rain and snow, and shall be provided with a continuous weep along the bottom of both sides of wind band. Units shall be self-cleaning by the action of the elements, and shall have provisions for carrying water and normal wind-transported soil matter to the outside. Ventilators shall be free of internal obstructions or moving parts which will require maintenance, and shall be complete with type of mounting indicated on drawings.

1.4 PROJECT/SITE CONDITIONS

Rough openings shall be field-measured and recorded prior to fabrication

of roof ventilators. Fabrication shall be scheduled with construction schedule.

PART 2 PRODUCTS

2.1 MATERIALS

2.1.1 Galvanized Steel Sheets

Steel sheets shall be commercial quality, zinc-coated steel (hot-dip galvanized) of quality established by ASTM A 653/A 653M, minimum G90 coating thickness.

2.1.2 Ridge Vents

Roof ridge vent meant to vent the air space between the gypsum board and the corragated sheet metal roof (enclosing the mineral fiber insulation) shall be fabricated of galvanized steel of similar properties as the roof material. Size and shape as shown on drawings.

2.2 RIDGE VENTILATORS

Roof ridge ventilators shall be fabricated of galvanized steel, and shall be assembled to any desired length. Continuous-run ridge ventilators shall be connected with splice plates of type which will telescope together and not require fasteners, soldering or welding. Ventilators shall be provided with metal insect screening and suitable filter material to prevent dust penetration into the building. Dampers and airshafts shall be complete with urethane gasketing for extra-tight enclosures. Metal closure strips which match the panel roof rib contours shall be provided to close out weather and provide a secure seat for ventilators.

2.3 STATIONARY VENTILATORS

Stationary roof ventilators shall be fabricated of galvanized steel with weathercap, and shall have straight-through drainage for eliminating the possibility of air-borne debris collecting in the ventilator openings. Bird screens shall be provided.

2.4 TURBINE VENTILATORS

Turbine ventilators shall be fabricated of galvanized steel sheets, complete with sensitive ball-bearing action to enable the slightest motion of air to move the rotor head where suction is maintained at low wind velocities. Ventilators shall have 360 degree operating surface to assure access of wind currents regardless of wind velocities. Rotor head shall be anchored to prevent head from lifting or jumping off the rotor in high winds. Rotor crown plate shall be seamless. Birdscreens shall be provided.

2.4.1 Dampers

Where indicated on drawings. Turbine ventilators shall be provided with dampers manually-operated with direct pull-chain or rack and pinion.

2.4.2 Rotor Shaft

Rotor shaft bearings shall be entirely shielded in corrosion-resistant. Bearings shall be pre-lubricated and shall have life-time warranty. Bearings shall be at top and bottom to assure accurate alignment. Shaft

and bearings shall be easily replaceable as a unit. Rotor collar shall be rolled and welded.

2.5 FABRICATION

Welds, soldered seams, rivets and fasteners shall be clean, secure, watertight, and smooth. Edges shall be wired or beaded, where necessary, to ensure rigidity. Joints between sections shall be watertight and shall allow for expansion and contraction. Galvanic action between different metals in direct contact shall be prevented by nonconductive separators.

2.6 CURB BASES

Ventilator bases for curb-mounted installations shall be of size indicated on drawings, and shall be designed specifically for the type of ventilator and roofing system approved for this project. Curb bases shall be factory-formed and flashed for a watertight installation. Curb bases shall be fabricated of material and finish to match the ventilator.

2.7 SCREENS

Screens shall be furnished by ventilator manufacturer as part of ventilator assembly. Screen (with frames) shall be manufactured of material to match ventilators, and shall be designed to be easily removed for cleaning purposes.

2.8 FINISH

2.8.1 Galvanized Steel Finish

Galvanized steel roof ventilators shall be factory-coated with rust-resistant primer and field-painted in accordance with Section 09900 PAINTING, GENERAL.

PART 3 EXECUTION

3.1 PREPARATION

Rough openings and other roof conditions shall be prepared in accordance with approved shop drawings and manufacturer's recommendations. Before starting the ventilator work, surrounding roof surfaces shall be protected from damage.

3.2 INSTALLATION

Roof ventilator installation shall be coordinated with roofing work, and shall be installed in accordance with approved drawings and chapter 8 of SMACNA Arch. Manual. The ventilator installation shall be watertight and shall be free of vibration noise. Roof ventilators shall be cleaned in accordance with ventilator manufacturer's recommendations.

3.3 PROTECTION

Exposed ventilator finish surfaces shall be protected against the accumulation of paint, grime, mastic, disfigurement, discoloration and damage for duration of construction activities.

-- End of Section --

SECTION 07840

FIRESTOPPING

PART 1 GENERAL

1.1 REFERENCES

The publications listed below form a part of this specification to the extent referenced. The publications are referred to within the text by the basic designation only.

ASTM INTERNATIONAL (ASTM)

ASTM E 814	(2002) Fire Tests of Through-Penetration Fire Stops
ASTM E 84	(2004) Surface Burning Characteristics of Building Materials

FM GLOBAL (FM)

FM P7825a	(2003) Approval Guide Fire Protection

UNDERWRITERS LABORATORIES (UL)

UL 1479	(2003) Fire Tests of Through-Penetration Firestops
UL 723	(2003) Test for Surface Burning Characteristics of Building Materials
UL Fire Resist Dir	(1999) Electrical Appliance and Utilization Equipment Directory

1.2 SUBMITTALS

Government approval is required for submittals with a "G" designation; submittals not having a "G" designation are for information only. When used, a designation following the "G" designation identifies the office that will review the submittal for the Government. The following shall be submitted in accordance with Section 01330 SUBMITTAL PROCEDURES:

SD-02 Shop Drawings

Firestopping Materials.

Detail drawings including manufacturer's descriptive data, typical details conforming to UL Fire Resist Dir or other details certified by another nationally recognized testing laboratory, installation instructions or UL listing details for a firestopping assembly in lieu of fire-test data or report. For those firestop applications for which no UL tested system is available through a manufacturer, a manufacturer's engineering judgement, derived from similar UL system designs or other tests, shall be submitted for review and approval prior to installation. Submittal shall

indicate the firestopping material to be provided for each type of application. When more than a total of 5 penetrations and/or construction joints are to receive firestopping, provide drawings that indicate location, "F" and "T" ratings, and type of application.

SD-07 Certificates

Firestopping Materials.

Certificates attesting that firestopping material complies with the specified requirements. In lieu of certificates, drawings showing UL classified materials as part of a tested assembly may be provided. Drawings showing evidence of testing by an alternate nationally recognized independent laboratory may be substituted.

Installer Qualifications.

Documentation of training and experience.

Inspection.

Manufacturer's representative certification stating that firestopping work has been inspected and found to be applied according to the manufacturer's recommendations and the specified requirements.

1.3 GENERAL REQUIREMENTS

Firestopping shall consist of furnishing and installing tested and listed firestop systems, combination of materials, or devices to form an effective barrier against the spread of flame, smoke and gases, and maintain the integrity of fire resistance rated walls, partitions, including through-penetrations and construction joints and gaps. Through-penetrations include the annular space around conduit, and wires.

1.4 DELIVERY AND STORAGE

Materials shall be delivered in the original unopened packages or containers showing name of the manufacturer and the brand name. Materials shall be stored off the ground and shall be protected from damage and exposure to elements. Damaged or deteriorated materials shall be removed from the site.

1.5 COORDINATION

The specified work shall be coordinated with other trades.

PART 2 PRODUCTS

2.1 FIRESTOPPING MATERIALS

Firestopping materials shall consist of commercially manufactured, asbestos-free, containing no water soluble intumescent imgredients, noncombustible products FM P7825a approved for use with applicable construction and penetrating items, complying with the following minimum requirements:

2.1.1 Fire Hazard Classification

Material shall have a flame spread of 25 or less, and a smoke developed rating of 50 or less, when tested in accordance with ASTM E 84 or UL 723. Material shall be an approved firestopping material as listed in UL Fire Resist Dir or by a nationally recognized testing laboratory.

2.1.2 Toxicity

Material shall be nontoxic to humans at all stages of application or during fire conditions.

2.1.3 Fire Resistance Rating

Firestop systems shall be UL Fire Resist Dir listed or FM P7825a approved with "F" rating at least equal to fire-rating of fire wall or floor in which penetrated openings are to be protected, except that "F" rating may be 3 hours in through-penetrations of 4 hour fire rated wall or floor. Firestop systems shall also have "T" rating where required.

2.1.3.1 Through-Penetrations

Firestopping materials for through-penetrations, as described in paragraph GENERAL REQUIREMENTS, shall provide "F" and "T" fire resistance ratings in accordance with ASTM E 814 or UL 1479. Fire resistance ratings shall be as follows:

a. Penetrations of Fire Resistance Rated Walls and Partitions: Rating of wall or partition being penetrated.

PART 3 EXECUTION

3.1 PREPARATION

Areas to receive firestopping shall be free of dirt, grease, oil, or loose materials which may affect the fitting or fire resistance of the firestopping system. For cast-in-place firestop devices, formwork or metal deck to receive device prior to concrete placement shall be sound and capable of supporting device. Surfaces shall be prepared as recommended by the manufacturer.

3.2 INSTALLATION

Firestopping material shall completely fill void spaces regardless of geometric configuration, subject to tolerance established by the manufacturer. Firestopping shall be installed in accordance with manufacturer's written instructions. Tested and listed firestop systems shall be provided in the following locations, except in floor slabs on grade:

a. Penetrations of duct, conduit, tubing, cable and pipe through floors and through fire-resistance rated walls, partitions, and ceiling-floor assemblies.

b. Gaps at perimeter of fire-resistance rated walls and partitions, such as between the top of the walls and the bottom of roof decks.

3.3 INSPECTION

For all projects,the firestopped areas shall not be covered or enclosed until inspection is complete and approved by the manufacturer's technical representative. Inspect the applications initially to ensure adequate preparations (clean surfaces suitable for application, etc.) and periodically during the work to assure that the completed work has been accomplished according to the manufacturer's written instructions and the specified requirements. The Contractor shall submit written reports indicating locations of and types of penetrations and types of firestopping used at each location; type shall be recorded by UL listed printed numbers.

-- End of Section --

SECTION 07900

JOINT SEALANTS

PART 1 GENERAL

1.1 SUBMITTALS

Government approval is required for submittals with a "G" designation; submittals not having a "G" designation are for information only. When used, a designation following the "G" designation identifies the office that will review the submittal for the Government. Submit the following in accordance with Section 01330 SUBMITTAL PROCEDURES:

SD-03 Product Data

Sealants

Primers

Bond breakers

Backstops

Manufacturer's descriptive data including storage requirements, shelf life, curing time, instructions for mixing and application, and primer data (if required). Provide a copy of the Material Safety Data Sheet for each solvent, primer or sealant material.

SD-07 Certificates

Sealant

Certificates of compliance stating that the materials conform to the specified requirements.

1.2 ENVIRONMENTAL REQUIREMENTS

The ambient temperature shall be within the limits of 4 to 32 degrees C when the sealants are applied.

1.3 DELIVERY AND STORAGE

Materials shall be delivered to the job in the manufacturer's original unopened containers. The container label or accompanying data sheet shall include the following information as applicable: manufacturer, name of material, formula or specification number, lot number, color, date of manufacture, mixing instructions, shelf life, and curing time at the standard conditions for laboratory tests. Materials shall be handled and stored to prevent inclusion of foreign materials. Materials shall be stored at temperatures between 4 and 32 degrees C unless otherwise specified by the manufacturer.

PART 2 PRODUCTS

2.1 BACKING

Backing shall be 25 to 33 percent oversize for closed cell polyethylene rod material, unless otherwise indicated.

2.2 BOND-BREAKER

Bond-breaker shall be as recommended by the sealant manufacturer to prevent adhesion of the sealant to backing or to bottom of the joint.

2.3 Joint Filler

Refer to section 03300 CAST-IN-PLACE STRUCTURAL CONCRETE

2.4 PRIMER

Primer shall be non-staining type as recommended by sealant manufacturer for the application.

2.5 SEALANT

2.5.1 Interior

Interior use only; limited joint movement only: Sealant single or Multiple-component, Acrylic, polyuretlane or latex formulation with fillers, pigments, and chemical additives.

2.5.1.1 Acrylic Joint Sealant

Basis of Design: Acrylic emulsion based joint sealant Nitoseal 105 by FOSROC, Sikacryl-s, or Sikamastik by Sika or Sonolastic NP1 or NP2 by degussa.

2.5.1.2 Mildew Resistant Sealant

Where mildew-resistance (moisture conditions) occur such as kitchens, bathrooms, and toilet/shower areas use a silicone sealant per sealant manufacturer's recommedations.

2.5.2 Exterior

Exterior sealer shall be a one or two component, gun grade, moisture curing silicone, polyurethane, two part polyurethane, or two part polysulfide sealant to be used for sealing and caulking applications in active exterior joints. Joint movement capability shall be -25% to +25%. Sealer shall be weather resistant.

2.5.2.1 Fuel and Chemical Resistant Sealant

Exterior Horizontal Surfaces: Provide single- or multi-component; pourable for horizontal surface, non-sag for vertical surfaces; joint movement capabilities consistent with anticipated, maximum joint movement; fuel- and chemical-resistant for horizontal, traffic surfaces per sealant manufacturer's recommendations.

2.6 SOLVENTS AND CLEANING AGENTS

Solvents, cleaning agents, and accessory materials shall be provided as recommended by the manufacturer.

PART 3 EXECUTION

3.1 GENERAL

3.1.1 Surface Preparation

The surfaces of joints to receive sealant shall be free of all frost, condensation and moisture. Oil, grease, dirt, chalk, particles of mortar, dust, loose rust, loose mill scale, and other foreign substances shall be removed from surfaces of joints to be in contact with the sealant. Oil and grease shall be removed with solvent and surfaces shall be wiped dry with clean cloths. For surface types not listed below, the sealant manufacturer shall be contacted for specific recommendations.

3.1.2 Concrete and Masonry Surfaces

Where surfaces have been treated with curing compounds, oil, or other such materials, the materials shall be removed by sandblasting or wire brushing. Laitance, efflorescence and loose mortar shall be removed from the joint cavity.

3.1.3 Steel Surfaces

Steel surfaces to be in contact with sealant shall be sandblasted or, if sandblasting would not be practical or would damage adjacent finish work, the metal shall be scraped and wire brushed to remove loose mill scale. Protective coatings on steel surfaces shall be removed by sandblasting or by a solvent that leaves no residue.

3.1.4 Wood Surfaces

Wood surfaces to be in contact with sealants shall be free of splinters and sawdust or other loose particles.

3.2 APPLICATION

3.2.1 Masking Tape

Masking tape shall be placed on the finish surface on one or both sides of a joint cavity to protect adjacent finish surfaces from primer or sealant smears. Masking tape shall be removed within 10 minutes after joint has been filled and tooled.

3.2.2 Backing

Backing shall be installed to provide the indicated sealant depth. The installation tool shall be shaped to avoid puncturing the backing.

3.2.3 Bond-Breaker

Bond-breaker shall be applied to fully cover the bottom of the joint without contaminating the sides where sealant adhesion is required.

3.2.4 Primer

Primer shall be used on concrete masonry units, wood, or other porous surfaces in accordance with instructions furnished with the sealant. Primer shall be applied to the joint surfaces to be sealed. Surfaces adjacent to joints shall not be primed.

3.2.5 Sealant

Sealant shall be used before expiration of shelf life. Multi-component sealants shall be mixed according to manufacturer's printed instructions. Sealant in guns shall be applied with a nozzle of proper size to fit the width of joint. Joints shall be sealed as detailed in the drawings. Sealant shall be forced into joints with sufficient pressure to expel air and fill the groove solidly. Sealant shall be installed to the indicated depth without displacing the backing. Unless otherwise indicated, specified, or recommended by the manufacturer, the installed sealant shall be dry tooled to produce a uniformly smooth surface free of wrinkles and to ensure full adhesion to the sides of the joint; the use of solvents, soapy water, etc., will not be allowed. Sealants shall be installed free of air pockets, foreign embedded matter, ridges and sags. Sealer shall be applied over the sealant when and as specified by the sealant manufacturer.

3.3 CLEANING

The surfaces adjoining the sealed joints shall be cleaned of smears and other soiling resulting from the sealant application as work progresses.

-- End of Section --

SECTION 08110

STEEL DOORS AND FRAMES

PART 1 GENERAL

1.1 REFERENCES

The publications listed below form a part of this specification to the extent referenced. The publications are referred to in the text by the basic designation only.

AMERICAN NATIONAL STANDARDS INSTITUTE (ANSI)

ANSI A250.6	(1997) Hardware on Standard Steel Doors (Reinforcement - Application)
ANSI A250.8	(1998) SDI-100 Recommended Specifications for Standard Steel Doors and Frames

ASTM INTERNATIONAL (ASTM)

ASTM C 578	(2004) Rigid, Cellular Polystyrene Thermal Insulation
ASTM C 591	(2001) Unfaced Preformed Rigid Cellular Polyisocyanurate Thermal Insulation
ASTM C 612	(2004) Mineral Fiber Block and Board Thermal Insulation
ASTM D 2863	(1997) Measuring the Minimum Oxygen Concentration to Support Candle-Like Combustion of Plastics (Oxygen Index)

NATIONAL FIRE PROTECTION ASSOCIATION (NFPA)

NFPA 80	(1999) Fire Doors and Fire Windows
NFPA 105	(1999) The Installation of Smoke-Control Door Assemblies
NFPA 252	(1999) Standard Methods of Fire Tests of Door Assemblies

STEEL DOOR INSTITUTE (SDI)

SDI 111-F	Recommended Existing Wall Anchors for Standard Steel Doors and Frames
SDI 113	(1979) Apparent Thermal Performance of STEEL DOOR and FRAME ASSEMBLIES

UNDERWRITERS LABORATORIES (UL)

UL 10B (1997) Fire Tests of Door Assemblies

1.2 SUBMITTALS

Government approval is required for submittals with a "G" designation; submittals not having a "G" designation are for information only. When used, a designation following the "G" designation identifies the office that will review the submittal for the Government. The following shall be submitted in accordance with Section 01330 SUBMITTAL PROCEDURES:

SD-02 Shop Drawings

Doors; G AED

Frames; G AED

Accessories

Weatherstripping

Show elevations, construction details, metal gages, hardware provisions, method of glazing, and installation details.

Schedule of doors; G AED

Schedule of frames; G AED

Submit door and frame locations.

SD-03 Product Data

Doors; G AED

Frames; G AED

Accessories

Weatherstripping

Submit manufacturer's descriptive literature for doors, frames, and accessories. Include data and details on door construction, panel (internal) reinforcement, insulation, and door edge construction. When "custom hollow metal doors" are provided in lieu of "standard steel doors," provide additional details and data sufficient for comparison to SDI/DOOR A250.8 requirements.

SD-04 Samples

Factory-applied enamel finish; G AED

Where colors are not indicated, submit manufacturer's standard colors and patterns for selection.

1.3 DELIVERY, STORAGE, AND HANDLING

Deliver doors, frames, and accessories undamaged and with protective wrappings or packaging. Provide temporary steel spreaders securely fastened

to the bottom of each welded frame. Store doors and frames on platforms under cover in clean, dry, ventilated, and accessible locations, with 6 mm airspace between doors. Remove damp or wet packaging immediately and wipe affected surfaces dry. Replace damaged materials with new.

PART 2 PRODUCTS

2.1 STANDARD STEEL DOORS

ANSI A250.8, except as specified otherwise. Prepare doors to receive hardware specified in Section 08710, "Door Hardware." Undercut where indicated. Exterior doors shall have top edge closed flush and sealed to prevent water intrusion. Doors shall be 44.5 mm thick, unless otherwise indicated.

All exterior doors shall be hollow metal doors.

2.2 ACCESSORIES

2.2.1 Louvers

2.2.1.1 Interior Louvers

Louvers shall be stationary sightproof type. Detachable moldings on room or non security side of door; on security side of door, moldings to be integral part of louver. Form louver frames of 0.9 mm thick steel and louver blades of a minimum 0.6 mm. Sightproof louvers to be inverted "V" blade design or inverted "Y" blade design.

2.2.2 Astragals

For pairs of exterior steel doors which will not have astragals or removable mullions, as specified in Section 08710, "Door Hardware," provide overlapping steel astragals with the doors.

2.2.3 Moldings

Provide moldings around glass of interior and exterior doors and louvers of interior doors. Provide nonremovable moldings on outside of exterior doors and on corridor side of interior doors. Other moldings may be stationary or removable. Secure inside moldings to stationary moldings, or provide snap-on moldings.

2.3 INSULATION CORES

Insulated cores shall be of type specified, and provide an apparent U-factor of .48 in accordance with SDI 113 and shall conform to:

a. Rigid Polyurethane Foam: ASTM C 591, Type 1 or 2 . Foamed-in-place or in board form, with oxygen index of not less than 22 percent when tested in accordance with ASTM D 2863; or

b. Rigid Polystyrene Foam Board: ASTM C 578, Type I or II , Board form; or

c. Mineral board: ASTM C 612, Type I, Block or board form.

Basis of Design: Imperial Doors.

2.4 STANDARD STEEL FRAMES

ANSI A250.8, except as otherwise specified. Form frames to sizes and shapes indicated, with welded corners. Provide steel frames for doors, unless otherwise indicated.

2.4.1 Steel Thickness (nominal):

For heavy duty doors: 1.5 mm.
For extra heavy duty doors: 1.9 mm.
For maximum duty doors: 2.7 mm.

2.4.2 Welded Frames

Continuously weld frame faces at corner joints. Mechanically interlock or continuously weld stops and rabbets. Grind welds smooth.

2.4.3 Mullions

Mullions shall be closed or tubular construction and shall member with heads and jambs butt-welded thereto. Bottom of door mullions shall have adjustable floor anchors and spreader connections.

2.4.4 Stops and Beads

Form stops and beads from 0.9 mm thick steel. Provide for glazed and other openings in standard steel frames. Secure beads to frames with oval-head, countersunk Phillips self-tapping sheet metal screws or concealed clips and fasteners. Space fasteners approximately 300 to 400 mm on centers. Miter molded shapes at corners. Butt or miter square or rectangular beads at corners.

2.4.5 Anchors

Provide anchors to secure the frame to adjoining construction. Provide steel anchors, zinc-coated or painted with rust-inhibitive paint, not lighter than 1.2 mm thick.

2.4.5.1 Wall Anchors

Provide at least three anchors for each jamb. For frames which are more than 2285 mm in height, provide one additional anchor for each jamb for each additional 760 mm or fraction thereof.

a. Masonry: Provide anchors of corrugated or perforated steel straps or 5 mm diameter steel wire, adjustable or T-shaped;

b. Completed openings: Secure frames to completed masonry with expansion bolts in accordance with SDI 111-F.

2.4.5.2 Floor Anchors

Provide floor anchors drilled for 10 mm anchor bolts at bottom of each jamb member.

2.5 FIRE AND SMOKE DOORS AND FRAMES

NFPA 80 and NFPA 105 and this specification. The requirements of NFPA 80 and NFPA 105 shall take precedence over details indicated or specified.

2.5.1 Labels

Fire doors and frames shall bear the label of Underwriters Laboratories (UL), Factory Mutual Engineering and Research (FM), or Warnock Hersey International (WHI) or independent testing organization attesting to the rating required. Testing shall be in accordance with NFPA 252 or UL 10B. Labels shall be metal with raised letters, and shall bear the name or file number of the door and frame manufacturer. Labels shall be permanently affixed at the factory to frames and to the hinge edge of the door. Door labels shall not be painted.

2.5.2 Astragal on Fire and Smoke Doors

On pairs of labeled fire doors, conform to NFPA 80 and UL. On smoke control doors, conform to NFPA 105.

2.6 WEATHERSTRIPPING

2.6.1 Integral Gasket

Black synthetic rubber gasket with tabs for factory fitting into factory slotted frames, or extruded neoprene foam gasket made to fit into a continuous groove formed in the frame, may be provided in lieu of head and jamb seals specified in Section 08710, "Door Hardware." Insert gasket in groove after frame is finish painted. Air leakage of weatherstripped doors shall not exceed 2.19 by 10-5 cubic meters per second of air per square meter of door area.

2.7 HARDWARE PREPARATION

Provide minimum hardware reinforcing gages as specified by door manufacturer's recommendations. Drill and tap doors and frames to receive finish hardware. Prepare doors and frames for hardware in accordance with the applicable requirements of ANSI A250.8 and ANSI A250.6. Drill and tap for surface-applied hardware at the project site. Build additional reinforcing for surface-applied hardware into the door at the factory. Locate hardware in accordance with the requirements of ANSI A250.8. Punch door frames, with the exception of frames that will have weatherstripping, to receive a minimum of two rubber or vinyl door silencers on lock side of single doors and one silencer for each leaf at heads of double doors. Set lock strikes out to provide clearance for silencers.

2.8 FINISHES

2.8.1 Factory-Primed Finish

All surfaces of doors and frames shall be thoroughly cleaned, chemically treated and factory primed with a rust inhibiting coating. Where coating is removed by welding, apply touchup of factory primer.

Bssis of Design: Jotun, Penguard Special.

2.8.2 Factory-Primed Finish

Thoroughly clean and chemically treat to insure maximum paint adhesion. Factory prime as recommended by door manufacturer. Provide for exterior doors and interior doors, indicated.

2.9 FABRICATION AND WORKMANSHIP

Finished doors and frames shall be strong and rigid, neat in appearance, and free from defects, waves, scratches, cuts, dents, ridges, holes, warp, and buckle. Molded members shall be clean cut, straight, and true, with joints coped or mitered, well formed, and in true alignment. Dress exposed welded and soldered joints smooth. Design door frame sections for use with the wall construction indicated. Corner joints shall be well formed and in true alignment. Conceal fastenings where practicable. On wraparound frames for masonry partitions, provide a throat opening 3 mm larger than the actual masonry thickness. Design other frames in exposed masonry walls or partitions to allow sufficient space between the inside back of trim and masonry to receive calking compound.

2.9.1 Grouted Frames

Fill the stops with strips of rigid insulation to keep the grout out of the stops and to facilitate installation of stop-applied head and jamb seals.

PART 3 EXECUTION

3.1 INSTALLATION

3.1.1 Frames

Set frames in accordance with door manufacturer's recommendations. Plumb, align, and brace securely until permanent anchors are set. Anchor bottoms of frames with expansion bolts or powder-actuated fasteners. Build in or secure wall anchors to adjoining construction. Backfill frames with mortar. When an additive is provided in the mortar, coat inside of frames with corrosion-inhibiting bituminous material. Ensure that stops are filled with rigid insulation before grout is placed.

3.1.2 Doors

Hang doors in accordance with clearances recommended by door manufacturer. After erection and glazing, clean and adjust hardware.

3.2 Fire and Smoke Doors and Frames

Install fire doors and frames, including hardware, in accordance with NFPA 80. Install fire rated smoke doors and frames in accordance with NFPA 80 and NFPA 105.

3.3 PROTECTION

Protect doors and frames from damage. Repair damaged doors and frames prior to completion and acceptance of the project or replace with new, as directed. Wire brush rusted frames until rust is removed. Clean thoroughly. Apply an all-over coat of rust-inhibitive paint of the same type used for shop coat.

3.4 CLEANING

Upon completion, clean exposed surfaces of doors and frames thoroughly. Remove mastic smears and other unsightly marks.

3.5 SCHEDULE

Some metric measurements in this section are based on mathematical conversion of inch-pound measurements, and not on metric measurement commonly agreed to by the manufacturers or other parties. The inch-pound and metric measurements are as follows:

PRODUCTS	INCH-POUND	METRIC
Door thickness	1 3/4 inches	44.5 mm
Steel channels	16 gage	1.5 mm
Steel Sheet	23 gage	0.7 mm
	16 gage	1.5 mm
	20 gage	0.9 mm
	18 gage	1.2 mm
Anchor bolts	3/8 inches	10 mm

-- End of Section --

SECTION 08330

OVERHEAD ROLLING DOORS

PART 1 GENERAL

1.1 DESCRIPTION

Overhead rolling doors shall be spring counterbalanced, rolling type, with interlocking slats, complete with guides, fastenings, hood, brackets, and operating mechanisms, and shall be designed for use on openings as indicated. Each door shall be provided with a permanent label showing the manufacturer's name and address and the model/serial number of the door. Doors in excess of the labelled size shall be deemed oversize and shall be provided with a listing agency oversize label, or a listing agency oversize certificate, or a certificate signed by an official of the manufacturing company certifying that the door and operator have been designed to meet the specified requirements.

1.1.1 Wind Load Requirements

Doors and components shall be designed to withstand the minimum design wind load of 960 Pa . Doors shall be constructed to sustain a superimposed load, both inward and outward, equal to 1-1/2 times the minimum design wind load. Recovery shall be at least 3/4 of the maximum deflection within 24 hours after the test load is removed. Sound engineering principles may be used to interpolate or extrapolate test results to door sizes not specifically tested

1.1.2 Operational Cycle Life

All portions of the door and door operating mechanism that are subject to movement, wear, or stress fatigue shall be designed to operate through a minimum number of 10 cycles per day. One complete cycle of door operation is defined as when the door is in the closed position, moves to the full open position, and returns to the closed position.

1.2 SUBMITTALS

Government approval is required for submittals with a "G" designation; submittals not having a "G" designation are for information only. When used, a designation following the "G" designation identifies the office that will review the submittal for the Government. The following shall be submitted in accordance with Section 01330 SUBMITTAL PROCEDURES:

SD-02 Shop Drawings

Approved Detail Drawings
Installation

Drawings showing the location of each door including schedules. Drawings shall include elevations of each door type, details and method of anchorage, details of construction, location and installation of hardware, shape and thickness of materials, details of joints and connections, and details of guides, power operators, controls, and other fittings.

SD-03 Product Data

Overhead Rolling Doors

Manufacturer's catalog data, test data, and summary of forces and loads on the walls/jambs.

Manufacturer's preprinted installation instructions.

SD-06 Test Reports

Tests

Written record of fire door drop test.

SD-04 Samples

Overhead Rolling Doors

Submit three color samples of factory applied finishes.

SD-07 Certificates

Fire Doors

Oversize labels or certificates stating that the overhead rolling doors conform to requirements of this section. Certificates for oversize fire doors stating that the doors and hardware are manufactured in compliance with the requirements for doors of this type and class and have been tested and meet the requirements for the class indicated. Certificate is not required when fire door has a listing agency label or oversize label on the door bottom bar.

1.3 DELIVERY AND STORAGE

Doors shall be delivered to the jobsite wrapped in a protective covering with the brands and names clearly marked thereon. Doors shall be stored in a dry location that is adequately ventilated and free from dirt and dust, water, and other contaminants, and in a manner that permits easy access for inspection and handling.

PART 2 PRODUCTS

2.1 OVERHEAD ROLLING DOORS

Doors shall be surface-mounted type with guides at jambs set back a sufficient distance to clear the opening. Exterior doors shall be mounted as indicated on Drawings.

2.1.1 Curtains

The curtains shall roll up on a barrel supported at the head of opening on brackets, and shall be balanced by helical torsion springs. Steel slats for doors less than 4.6 m wide shall be minimum bare metal thickness of 0.71 mm. Slats shall be of the minimum bare metal decimal thickness required for the width indicated and the wind pressure specified above.

2.1.1.1 Non-Insulated Curtains

Curtains shall be formed of interlocking slats of shapes standard with the manufacturer. Slats for exterior doors shall be flat type.

2.1.2 Endlocks and Windlocks

The ends of each alternate slat for interior doors shall have steel endlocks of manufacturer's stock design. In addition to endlocks, non-rated exterior doors shall have the manufacturer's standard windlocks as required to withstand the wind load. Windlocks shall prevent the curtain from leaving guides because of deflection from specified wind pressure.

2.1.3 Bottom Bar

The curtain shall have a standard bottom bar consisting of two hot-dip galvanized steel angles for steel doors or as standard with manufacturer.

2.1.4 Guides

Guides shall be steel structural shapes or formed steel shapes, of a size and depth to provide proper clearance for operation and resistance under the design windload. Guides shall be attached to adjoining construction with fasteners recommended by the manufacturer. Spacing of fasteners shall be as required to meet the minimum design windload. Doors and guides in hazardous areas shall have static grounding.

2.1.5 Barrel

The barrel shall be steel pipe or commercial welded steel tubing of proper diameter for the size of curtain. Deflection shall not exceed 2.5 mm per meter of span. Ends of the barrel shall be closed with metal plugs, machined to fit the pipe. Aluminum plugs are acceptable on non-fire door barrels.

2.1.6 Springs

Counter-balance torsion springs shall be installed within the barrel and shall be capable of producing sufficient torque to assure easy operation of the door curtain. Access shall be provided for spring tension adjustment from outside of the bracket without removing the hood.

2.1.7 Brackets

Brackets shall be of steel plates to close the ends of the roller-shaft housing, and to provide mounting surfaces for the hood. An operation bracket hub and shaft plugs shall have sealed prelubricated ball bearings.

2.1.8 Hoods

Hoods shall be steel with minimum bare metal thickness of 0.56 mm formed to fit contour of the end brackets, and shall be reinforced with steel rods, rolled beads, or flanges at top and bottom edges. Multiple segment and single piece hoods shall be provided with support brackets of the manufacturer's standard design as required for adequate support.

2.1.9 Weatherstripping

Exterior doors shall be fully weatherstripped. A compressible and replaceable weather seal shall be attached to the bottom bar. Weather seal at door guides shall be continuous vinyl or neoprene, bulb or leaf type, or shall be nylon-brush type. A weather baffle shall be provided at the lintel or inside the hood. Weatherstripping shall be easily replaced without special tools.

2.1.10 Operation

Doors shall be operated by means of manual hand-chain

2.1.10.1 Manual Hand-Chain Operation

Operation shall be by means of a steel endless chain extending to within 915 mm of floor. Reduction shall be provided by use of roller chain and sprocket drive or suitable gearing, to reduce the pull required on hand chain to 150 N to 160 N.

2.1.11 Locking

Locking shall consist of chain lock keeper, suitable for padlock by others, for chain operated doors

2.1.12 Finish

Steel slats and hoods shall receive a factory baked-on prime coat for field finishing Surfaces other than slats, hood, and faying surfaces shall be cleaned and treated to assure maximum paint adherence and shall be given a factory dip or spray coat of rust inhibitive metallic oxide or synthetic resin primer.

2.2 ROLLING COUNTER FIRE DOOR

Rolling counter Fire Door shall be mounted at face of wall as indicated on drawings, labled with UL 3/4 hour fire rating, operation shall be manual push up with conventional release system and Automatic closer activated by fisible Link.

PART 3 EXECUTION

3.1 INSTALLATION

Doors shall be installed in accordance with approved detail drawings and manufacturer's instructions. Anchors and inserts for guides, brackets, hardware, and other accessories shall be accurately located. Upon completion, doors shall be free from warp, twist, or distortion. Doors shall be lubricated, properly adjusted, and demonstrated to operate freely.

3.2 FIELD PAINTED FINISH

Steel doors and frames shall be field painted in accordance with Section 09900 PAINTING, GENERAL. Weatherstrips shall be protected from paint. Finish shall be free of scratches or other blemishes. Color shall be gloss white.

3.3 CONTINUED OPERATION

Operate and maintain doors per manufacturer's operation and maintenance manuals requirements.

-- End of Section --

SECTION 08520

ALUMINUM WINDOWS

PART 1 GENERAL

1.1 REFERENCES

The publications listed below form a part of this specification to the extent referenced. The publications are referred to within the text by the basic designation only.

AMERICAN ARCHITECTURAL MANUFACTURERS ASSOCIATION (AAMA)

AAMA 101	(1999) Voluntary Specifications for Aluminum, Vinyl (PVC) and Wood Windows and Glass Doors

BRITISH STANDARDS INSTITUTION (BSI)

BS 1474	(1987) Specification for wrought aluminium and aluminium alloys for general engineering purposes: bars, extruded round tubes and sections

1.2 PERFORMANCE REQUIREMENTS

Window sash shall not be operable or removable from the outside when closed. Window sashes shall not rattle in frames under normally occurring site conditions. Significant water shall not penetrate sashes, frames, connections of either, or fully assembled window units under conditions of driving precipitation. Force required to operate window shall not exceed that applied by an average person using one hand. At the same time, windows must resist site conditions with the potential to force the window open or shut. Windows shall be weather-stripped or otherwise designed to prevent the transmission of drafts. Frame shall provide means for condensation or otherwise trapped moisture within the window unit itself to escape to the exterior. Frame shall allow for connection of insect screening without gaps or openings that might allow the passage of insects or windblown debris.

1.3 SUBMITTALS

Government approval is required for submittals with a "G" designation; submittals not having a "G" designation are for information only. When used, a designation following the "G" designation identifies the office that will review the submittal for the Government. The following shall be submitted in accordance with Section 01330 SUBMITTAL PROCEDURES:

SD-02 Shop Drawings

Aluminum Windows
Insect Screens

Drawings indicating elevations of window, rough-opening dimensions for each type and size of window, full-size sections,

thicknesses of metal, fastenings, methods of installation and anchorage, connections with other work, type of wall construction, size and spacing of anchors, method of glazing, types and locations of operating hardware, mullion details, weatherstripping details, screen details including method of attachment, and window schedules showing locations of each window type.

SD-03 Product Data

Aluminum Windows

Manufacturer's descriptive data and catalog cut sheets. Manufacturer's preprinted installation instructions and cleaning instructions.

SD-04 Samples

Aluminum Windows

Submit three color samples of the specified finishes.

SD-06 Test Reports

Aluminum Windows

Reports for each type of aluminum window attesting that identical windows have been tested and meet all performance requirements established under paragraph WINDOW PERFORMANCE.

SD-07 Certificates

Aluminum Windows

Certificates stating that the aluminum windows are AAMA certified conforming to requirements of this section. Labels or markings permanently affixed to the window will be accepted in lieu of certificates. Product ratings determined using NFRC 100 and NFRC 200 shall be authorized for certification and properly labeled by the manufacturer.

1.4 DELIVERY AND STORAGE

Deliver windows to project site in an undamaged condition. Use care in handling and hoisting windows during transportation and at the jobsite. Store windows and components out of contact with the ground, under a weathertight covering, so as to prevent bending, warping, or otherwise damaging the windows. Damaged windows shall be repaired to an "as new" condition as approved. If windows can not be repaired, provide a new unit.

1.5 PROTECTION

Protect finished surfaces during shipping and handling using the manufacturer's standard method, except that no coatings or lacquers shall be applied to surfaces to which calking and glazing compounds must adhere.

PART 2 PRODUCTS

2.1 MATERIALS

2.1.1 Aluminum

Aluminum shall meet BS 1474.

2.2 WINDOWS

2.2.1 Horizontal Sliding Windows (HS)

As indicated on drawings.

2.2.2 Hopper Windows

As indicated on drawings. Windows shall swing inwards.

2.2.3 Fixed Windows (F)

As indicated on drawings.

2.2.4 Glass and Glazing

Materials are specified in Section 08810 GLAZING.

2.2.5 Calking and Sealing

Are specified in Section 07900 JOINT SEALANTS.

2.2.6 Weatherstripping

AAMA 101.

2.3 FABRICATION

Fabrication shall be such that window units shall meet performance requirements as stated in this section.

2.3.1 Provisions for Glazing

Design windows and rabbets suitable for glass thickness specified. Exterior glazing shall have a minimum frame bite sufficent to meet requirements of installation location for glass retention. Design sash for inside glazing and for securing glass with metal beads, or glazing compound.

2.3.2 Weatherstripping

Provide easily replaceable factory-applied weatherstripping. Use molded vinyl,or molded or expanded Ethylene Propylene Diene Terpolymer (EPDM) weatherstripping for compression contact surfaces. Use treated woven pile or wool, or polypropylene or nylon pile bonded to nylon fabric and metal or plastic backing strip weatherstripping for sliding surfaces. Do no use neoprene or polyvinylchloride weatherstripping.

2.3.3 Fasteners

Use fasteners as standard with the window manufacturer for windows, trim, and accessories. Self-tapping sheet-metal screws are not acceptable for

material more than 2 mm thick.

2.3.4 Combination Windows

Windows used in combination shall be the same class and grade and shall be factory assembled. Where factory assembly of individual windows into larger units is limited by transportation considerations, prefabricate, match mark, transport, and field assemble.

2.3.5 Mullions and Transom Bars

Secure transom bars to adjoining construction and window units in such a manner as to permit expansion and contraction and to form a weathertight joint.

2.3.6 Accessories

Provide windows complete with necessary hardware, fastenings, clips, fins, anchors, glazing beads, and other appurtenances necessary for complete installation and proper operation. Furnish extruded aluminum subframe receptors and subsill with each window unit.

2.3.6.1 Hardware

The item, type, and functional characteristics shall be the manufacturer's standard for the particular window type. Provide hardware of suitable design and of sufficient strength to perform the function for which it is used. Equip all operating ventilators with a lock or latching device which can be secured from the inside.

2.3.6.2 Fasteners

Provide concealed anchors of the type recommended by the window manufacturer for the specific type of construction. Anchors and fasteners shall be compatible with the window and the adjoining construction. Provide a minimum of three anchors for each jamb located approximately 150 mm from each end and at midpoint.

2.3.7 Finishes

Exposed aluminum surfaces shall be factory finished with baked finish. Color shall be as selected. All windows for each building shall have the same finish.

2.3.8 Screens

Provide one insect screen permenently fixed to the exterior for each operable sash or ventilator. Design screens to be rewirable, and to permit easy access to operating hardware.

PART 3 EXECUTION

3.1 INSTALLATION

3.1.1 Method of Installation

Install in accordance with the window manufacturer's printed instructions and details. Build in windows as the work progresses or install without forcing into prepared window openings. Set windows at proper elevation,

location, and reveal; plumb, square, level, and in alignment; and brace, strut, and stay properly to prevent distortion and misalignment. Protect ventilators and operating parts against accumulation of dirt and building materials by keeping ventilators tightly closed and locked to frame. Bed screws or bolts in sill members, joints at mullions, contacts of windows with sills, built-in fins, and subframes in mastic sealant of a type recommended by the window manufacturer. Install windows in a manner that will prevent entrance of water and wind. Fasten insect screens securely in place.

3.1.2 Dissimilar Materials

Where aluminum surfaces are in contact with, or fastened to masonry, concrete, wood, or dissimilar metals, except stainless steel or zinc, the aluminum surface shall be protected from dissimilar materials as recommended by the manufacturer. Surfaces in contact with sealants after installation shall not be coated with any type of protective material.

3.1.3 Anchors and Fastenings

Make provision for securing units to each other, to masonry, and to other adjoining construction. Windows installed in masonry walls shall have head and jamb members designed to recess into masonry wall not less than 11 mm.

3.1.4 Adjustments After Installation

After installation of windows and completion of glazing and field painting, adjust all ventilators and hardware to operate smoothly and to provide weathertight sealing when ventilators are closed and locked. Lubricate hardware and operating parts as necessary.

3.2 CLEANING

Clean interior and exterior surfaces of window units of mortar, plaster, paint spattering spots, and other foreign matter to present a neat appearance, to prevent fouling of weathering surfaces and weather-stripping, and to prevent interference with the operation of hardware. Replace all stained, discolored, or abraded windows that cannot be restored to their original condition with new windows.

3.3 SCHEDULE

Some metric measurements in this section are based on mathematical conversion of inch-pound measurements, and not on metric measurement commonly agreed to by the manufacturers or other parties. The inch-pound and metric measurements are as follows:

PRODUCTS	INCH-POUND	METRIC
Metal Casing	0.0625 inch	1.59 mm
Aluminum Tube	0.0625 inch	1.59 mm
(Diameter)	1 inch	25 mm

-- End of Section --

SECTION 08581

BLAST RESISTANT TEMPERED GLASS WINDOWS

PART 1 GENERAL

1.1 REFERENCES

The publications listed below form a part of this specification to the extent referenced. The publications are referred to within the text by the basic designation only.

ALUMINUM ASSOCIATION (AA)

AA DAF-45	(2003) Designation System for Aluminum Finishes

AMERICAN ARCHITECTURAL MANUFACTURERS ASSOCIATION (AAMA)

AAMA 101	(2005) Voluntary Specifications for Aluminum, Vinyl (PVC) and Wood Windows and Glass Doors

AMERICAN NATIONAL STANDARDS INSTITUTE (ANSI)

ANSI Z97.1	(2004) Safety Glazing Materials Used in Buildings

ASTM INTERNATIONAL (ASTM)

ASTM C 1048	(2004) Heat-Treated Flat Glass - Kind HS, Kind FT Coated and Uncoated Glass
ASTM C 509	(2000) Elastomeric Cellular Preformed Gasket and Sealing Material
ASTM C 920	(2005) Elastomeric Joint Sealants

GLASS ASSOCIATION OF NORTH AMERICA (GANA)

GANA Glazing Manual	(2004) Glazing Manual

1.2 SUBMITTALS

Government approval is required for submittals with a "G" designation; submittals not having a "G" designation are for information only. When used, a designation following the "G" designation identifies the office that will review the submittal for the Government. The following shall be submitted in accordance with Section 01330 SUBMITTAL PROCEDURES:

SD-02 Shop Drawings

All Window units

Submit drawings indicating elevations of windows, full-size sections, thickness of metal, fastenings, proposed method of anchoring, size and spacing of anchors, details of construction,

complete details of setting methods and materials for each type of glazing material, details of hardware, mullion details, method and materials for weatherstripping, support conditions for the glass, material and method of attaching subframes, stools, casings, sills, trim, installation details, and other related items.

SD-03 Product Data

All Window units

Hardware

Setting materials

Weatherstripping

Submit window frame data for each type and finish.

SD-04 Samples

Window units

Submit when factory-finished color coating is provided.

SD-08 Manufacturer's Instructions

Glass

Submit glass manufacturer's instructions for setting and sealing materials and for installation of each type of glazing material specified.

1.3 QUALITY ASSURANCE

1.3.1 Label

Each prime window unit shall bear the AAMA Label warranting that the product complies with AAMA 101. Certificates of Compliance attesting that the prime window units meet the requirements of AAMA 101 will be acceptable in lieu of product labeling.

1.3.2 Glass and Glazing

Provide materials that are certified to meet ANSI Z97.1 by an independent testing laboratory.

1.3.3 Independent Testing

Testing shall be performed by an independent testing laboratory (certified by the Contracting Officer) and test report shall be signed by a registered professional engineer and shall include results from tests in the calculations.

1.4 DELIVERY, STORAGE, AND HANDLING

a. Deliver products to the site in unopened containers, labeled plainly with manufacturers' name and brands. Deliver window assemblies in an undamaged condition. Exercise care in handling and hoisting windows during transportation and at the job site.

Store windows and components out of contact with the ground, under a weathertight covering, so as to prevent bending, warping, or otherwise damaging the windows.

b. Finished surfaces shall be protected during shipping and handling using the manufacturer's standard method, except that no coatings or lacquers shall be applied to surfaces to which sealants, caulking, or glazing compounds must adhere.

1.5 ENVIRONMENTAL CONDITIONS

Do not start glazing work until the outdoor temperature is above 4 degrees C and rising unless approved provisions are made to warm the glass and rabbet surfaces. Provide sufficient ventilation to prevent condensation of moisture on glazing work during installation. Do not perform glazing work if moisture collects on window assemblies or during rainy weather.

PART 2 PRODUCTS

2.1 WINDOW UNITS

Primed window frames shall conform to AAMA 101 and the requirements specified herein. Provide windows of types, grades, performance classes, combinations, and sizes indicated or specified. Provide windows to accommodate hardware, glass, weatherstripping and accessories. Each window shall be a complete factory-assembled unit with glass factory or field installed.

2.2 WEATHERSTRIPPING

Weatherstripping shall conform to AAMA 101.

2.3 GLASS

Use ASTM C 1048 and ANSI Z97.1 Grade B (tempered), Style I (uncoated), Type 2, Class 1 (transparent).

2.4 SETTING MATERIALS

Provide types required for the applicable setting method specified in the GANA Glazing Manual, unless specified otherwise herein. Do not use metal sash putty, non-skinning compounds, nonresilient preformed sealers, or impregnated preformed gaskets. Materials exposed to view and unpainted shall be neutral color.

2.4.1 Elastomeric Sealant

ASTM C 920, Type S or M, Grade NS, Class 12.5, Use NT. Use for channel or stop glazing and metal sash. Sealant shall be chemically compatible with setting blocks, edge blocks, and sealing tapes. Color of sealant shall be white.

2.4.2 Sealing Tapes, Beads or Gaskets

Gaskets or beads shall be at least 9.5 mm wide with a Shore "A" durometer hardness of 50 and conform to ASTM C 509.

2.4.3 Setting Blocks and Edge Blocks

Use neoprene of 70 to 90 Shore "A" durometer hardness, chemically compatible with sealants used, and of sizes recommended by the glass manufacturer.

2.4.4 Accessories

Use accessories as required to provide a complete installation, including glazing points, clips, shims, angles, beads, and spacer strips. Provide noncorroding metal accessories. Provide primer-sealers and cleaners as recommended by the glass and sealant manufacturers.

2.5 WINDOW ASSEMBLIES

Window units shall conform to AAMA 101.

2.5.1 Provisions for Glazing

Provide windows and rabbets suitable for specified glass thickness. Provide sash for glazing and for securing glass with glazing channels and glazing compound.

2.5.2 Sealant, Gaskets, and Beads

Sealant, gaskets, and beads shall be continuous around the perimeter of the glass.

2.5.3 Weatherstripping

Provide for ventilating sections of windows to ensure a weathertight seal meeting the infiltration requirements specified in AAMA 101. Provide factory-applied weatherstripping that can be replaced by field repair mechanics. Use molded vinyl, molded or molded-expanded neoprene for weatherstripping for compression contact surfaces. Do not use neoprene or polyvinyl chloride weatherstripping where it will be exposed to direct sunlight.

2.5.4 Fasteners

Provide flathead, cross-recessed type, exposed head screws and bolts with standard threads for use on windows, trim, and accessories. Screw heads shall finish flush with adjoining surfaces. Self-tapping sheet-metal screws are not acceptable for material more than 1.59 mm thick.

2.5.5 Drips and Weep Holes

Provide continuous drips over heads of top ventilators. Where fixed windows adjoin ventilators, drips shall be continuous across tops of fixed windows. Provide drips and weep holes as required to return water to the outside.

2.5.6 Combination Windows

Windows used in combination shall be the same grade and performance class and shall be factory assembled. Where factory assembly of individual windows into larger units is limited by transportation considerations, prefabricate, match mark, transport, and field assemble.

2.5.7 Accessories

Provide windows complete with necessary hardware, fastenings, clips, fins, anchors, glazing beads, and other appurtenances necessary for complete installation and proper operation.

2.5.8 Hardware

The item, type, and functional characteristics shall be the manufacturer's standard for the particular window type and shall conform to AAMA 101. Provide hardware that functions after the window assembly has withstood the application of the design blast pressure causing the development of a static design resistance, ru, uniformally applied over both glazing and frame as defined in paragraph entitled "Certificates of Compliance" of this section. Equip operating ventilators with a lock or latching device which can be secured from the inside.

2.5.9 Anchors

Provide concealed anchors of the type recommended by the window manufacturer for the specific type of construction. Anchors and fasteners shall be compatible with the window and the adjoining construction. Provide a minimum of three anchors for each jamb located approximately 150 mm from each end and at midpoint.

2.5.10 Finishes

Exposed aluminum surfaces shall be factory finished with an anodic coating. Windows for each building shall have the same finish. Color shall be chosen from three (3) color samples submitted.

2.5.10.1 Anodic Coating

Clean exposed aluminum surfaces and provide an anodized finish conforming to AA DAF-45.

2.6 SOURCE QUALITY CONTROL

2.6.1 Window Assembly Structural Test

2.6.1.1 Test Sample Number

At least two sample window assemblies for each type of window provided shall be tested, under an increasing uniform static load. Number of samples, beyond two, is left up to the vendor. However, it is noted that the acceptance criteria encourages a larger number of test samples.

2.6.1.2 Test Procedure

Test windows (glass panes and support frame) shall be identical in type, size, sealant, gasket or bead and construction to those furnished by the window manufacturer. The frame assembly in the test setup shall be secured by boundary conditions that simulate the adjoining walls of the structure for intended installation. The simulation securing boundary conditions shall be verified and attested by an attending Professional Engineer. Using either a vacuum or a liquid-filled bladder, an increasing uniform load shall be applied to the entire window assembly (glass and frame) until failure occurs in either the glass or frame. Failure shall be defined as either breaking of glass or loss of frame resistance. The failure load,

rf, shall be recorded to three significant figures. The load should be applied at a rate of 0.5 ru per minute where ru is the static design resistance:

2.6.1.3 Acceptance Criteria

The static load capacity (rs) of a glass pane for the specified acceptance test procedure is:

rs = 0.876 ru (1)

The window assembly (frame and glass) is considered acceptable when the arithmetic mean of all the samples tested, r- such that:

r- => rs + sA (2)

where: rs = static load capacity of the glass pane for certification testing
s = sample standard deviation
A = acceptance coefficient (Table 1)

a. Arithmetic mean/standard deviation: For n test samples, r- is defined as:

r- = sum from i = 1 thru n for rfi divided by n (3)

where rfi is the recorded failure load of the ith test sample.

The sample standard deviation, s, is defined as:

s = the square root of the quantity of the sum from i = 1 thru n for (rfi - r-2) divided by (n - 1) (4)

The minimum value of the sample standard deviation, s, permitted to be employed in Equation (2) is:

s = 0.145 rs (5)

This assures a sample standard deviation no better than observed for the general population of tempered glass.

b. Additional sampled determination: The following equation can be used by tester to determine if additional test samples are justified. If:

r- =< rs + sB (6)

then with 90% confidence, the design will not prove to be adequate with additional tests. Obtain rejection coefficient, B, from Table 1.

Table 1. Statistical Acceptance and Rejection Coefficients

Number of Window Assemblies n	Acceptance Coefficient A	Rejection Coefficient B
2	4.14	.546
3	3.05	.871

Table 1. Statistical Acceptance and Rejection Coefficients

Number of Window Assemblies n	Acceptance Coefficient A	Rejection Coefficient B
4	2.78	1.14
5	2.65	1.27
6	2.56	1.36
7	2.50	1.42
8	2.46	1.48
9	2.42	1.49
10	2.39	1.52
11	2.37	1.54
12	2.35	1.57
13	2.33	1.58
14	2.32	1.60
15	2.31	1.61
16	2.30	1.62
17	2.28	1.64
18	2.27	1.65
19	2.27	1.65
20	2.26	1.66
21	2.25	1.67
22	2.24	1.68
23	2.24	1.68
24	2.23	1.69
25	2.22	1.70
30	2.19	1.72
40	2.17	1.75
50	2.14	1.77

PART 3 EXECUTION

3.1 INSTALLATION

3.1.1 Method of Installation

Install in accordance with the window manufacturer's printed instructions and details. Set windows at proper elevation, location, and reveal. Brace properly to prevent distortion and misalignment. Bed screws or bolts in sill members, joints at mullions, contacts of windows with sills, built-in fins, and subframes in mastic sealant of a type recommended by the window manufacturer. Install windows in a manner that will prevent entrance of water. Fasten hardware to windows.

3.1.2 Glass Setting

Items to be glazed shall be either shop or field glazed using glass of the quality and thickness specified or indicated. Preparation and glazing, unless otherwise approved, shall conform to applicable recommendations in the GANA Glazing Manual. Windows may be glazed in conformance with one of the glazing methods described in the standards under which they are produced, except that face puttying with no bedding will not be permitted. Handle and install glazing materials in accordance with manufacturer's instructions. Use beads or stops furnished with items to be glazed, to secure glass in place.

3.1.3 Dissimilar Materials

Where aluminum surfaces are in contact with, or fastened to, masonry, wood, or dissimilar metals, except stainless steel or zinc, the aluminum surface shall be protected from dissimilar materials as recommended in the Appendix to AAMA 101. Do not coat surfaces on which sealants are to adhere.

3.1.4 Anchors and Fastenings

Make provision for securing units to each other and to adjoining construction.

3.1.5 Adjustments After Installation

After installation of windows and completion of glazing and field painting, adjust ventilators and hardware to operate smoothly and to provide weathertight sealing when ventilators are closed and locked. Lubricate hardware and operating parts as recommended by the manufacturer.

3.2 CLEANING

Clean interior and exterior surfaces of window units of mortar, plaster, paint spattering spots, and other foreign matter to present a neat appearance, to prevent fouling of weathering surfaces and weatherstripping, and to prevent interference with the operation of hardware. Remove stained, discolored, or abraded windows that cannot be restored to their original condition, and replace with new windows.

3.3 SCHEDULE

Some metric measurements in this section are based on mathematical conversion of English unit measurements, and not on metric measurements commonly agreed to by the manufacturers or other parties. The English and metric units for the measurements shown are as follows:

Products	English Units	Metric Units
Gaskets	3/8 inch	9.5 mm
Glass	1/4 inch	6.0 mm
	5/16 inch	8.0 mm
	3/8 inch	10.0 mm
	1/2 inch	12.0 mm
	5/8 inch	16.0 mm
	3/4 inch	19.0 mm
	7/8 inch	22.0 mm
	1 inch	25.0 mm

-- End of Section --

SECTION 08710

DOOR HARDWARE

PART 1 GENERAL

1.1 REFERENCES

The publications listed below form a part of this specification to the extent referenced. The publications are referred to in the text by the basic designation only.

BRITISH STANDARDS INSTITUTION (BSI)

BS 7352	(1990) Specification for strength and durability performance of metal hinges for side hanging applications and dimensional requirements for template drilled hinges

NATIONAL FIRE PROTECTION ASSOCIATION (NFPA)

NFPA 80	(1999) Fire Doors and Fire Windows
NFPA 101	(2000) Life Safety Code

1.2 SUBMITTALS

Government approval is required for submittals with a "G" designation; submittals not having a "G" designation are for information only. When used, a designation following the "G" designation identifies the office that will review the submittal for the Government. The following shall be submitted in accordance with Section 01330 SUBMITTAL PROCEDURES:

SD-02 Shop Drawings

Hardware schedule; G AED

Keying system

SD-03 Product Data

Hardware items; G AED

SD-08 Manufacturer's Instructions

Installation

1.3 QUALITY ASSURANCE

1.3.1 Hardware Manufacturers and Modifications

Provide, as far as feasible, locks, hinges, and closers of one lock, hinge, or closer manufacturer's make. Modify hardware as necessary to provide features indicated or specified.

1.4 DELIVERY, STORAGE, AND HANDLING

Deliver hardware in original individual containers, complete with necessary appurtenances including fasteners and instructions. Mark each individual container with item number as shown in hardware schedule.

PART 2 PRODUCTS

2.1 TEMPLATE HARDWARE

Hardware to be applied to metal shall be made to template. Promptly furnish template information or templates to door and frame manufacturers. Coordinate hardware items to prevent interference with other hardware.

2.2 HARDWARE ITEMS

Hinges, locks, latches, exit devices, bolts, and closers shall be clearly and permanently marked with the manufacturer's name or trademark where it will be visible after the item is installed. For closers with covers, the name or trademark may be beneath the cover. Provide hardware items in quantities and locations as per approved hardware schedule.

2.2.1 Hinges

BS 7352. Construct 5-knuckle, 4-hole, satin finsh hinges so that pins will be nonremovable. Provide three hinges for doors 2200 mm or less in height; one additional hinge for each additional 800 mm of door height.

2.2.2 Locks and Latches

2.2.2.1 Lock Function Definitions

Privacy Function: Latch bolt by knobs/levers, dead bolt by turn inside or emergency key.

Office/Bedroom Function: Deadbolt locked by key from outside or thumbturn from inside. Latch operates from both sides by knob/lever.

Emergency Exit (Egress) Function: Latch bolt by exit device or from inside at all times and by knob/lever from outside. Outside lever/knob to be locked/unlocked by thumbturn from inside.

2.2.2.2 Mortise Lock with Cylinder (Wide Type)

Case: Steel, painted or zinc plated
Forend plate: Steel and chrome-nickel plated.
Deadbolt: Brass.
Latch: Brass.

2.2.2.3 Interior Mortise Bathroom Lock with Thumbturn and emergency release.

Case: Steel painted.
Forend plate: Steel and chrome plated.
Deadbolt: Zinc alloy and chrome plated.
Latch: Zinc alloy and chrome-nickel plated.

2.2.2.4 Security Mortise Lock with Cylinder

Case: Steel, painted or zinc plated.

Forend plate: Stainless Steel, Brass or Steel chrome plated.
Deadbolt: Steel, Brass 2 bars, chrome-nickel plated.

2.2.3 Exit Devices

Provide adjustable strikes for rim type or vertical rod devices. Touch bars may be provided in lieu of conventional crossbars and arms.

2.2.4 Cylinders

Cylinders shall be products of one manufacturer.

Body: Brass or brass chrome plated, standard size, euro profile.
Key: Multiwave (Standard).
Cam: Steel.
Key : minimum 5 pin.
Springs: Phosphorus bronze or magnizium.
Pins: Brass.

2.2.5 Keying System

Eight master keys fitting all locks and eight sub-master keys fitting all exterior doors shall be provided for each building. Three keys shall be provided for each interior door . Provide a numbering system identifying key to associated room door. Furnish 25% of the total number of keys as spare blanks.

2.2.6 Lock Trim

Commercial design with satin finish escutcheons and levers or knobs.

2.2.6.1 Lever Handles

Basis of Design: Politeknik, Model 303-251 SS, Diamond SD D01, or Consort CH 100.

2.2.6.2 Building Entrance Handles and Pulls

Basis of Design: Politeknik, Model 225 SS 200, or Consort CH 100.

2.2.6.3 Other Handles and Pulls

Basis of Design: Consort, or Politeknik, Model 302-251 SS WC.

2.2.7 Door Bolts

Provide dustproof strikes for bottom bolts, except for doors having metal thresholds.

2.2.8 Closers

Provide with brackets, arms, mounting devices, fasteners, and other features necessary for the particular application. Size closers in accordance with manufacturer's recommendations, or provide multi-size closers.

2.2.8.1 Interior Doors:

Basis of Design: GEZE TS 1500

2.2.8.2 Exterior Doors:

Basis of Design: GEZE TS 1500

2.2.9 Door Protection Plates

2.2.9.1 Sizes of Armor, Kick, and Push Plates

Width for single doors shall be 50 mm less than door width; width for pairs of doors shall be 25 mm less than door width. Height of kick plates shall be 200 mm for flush doors. Height of armor plates shall be not less than 900 mm for flush doors. Dimension of stainless steel push plates is 150 x 300 mm.

2.2.10 Door Stops

Basis of Design: Hagar, or Meysan.

2.2.11 Thresholds

Basis of Design: Hagar.

2.2.12 Weather Stripping Gasketing

Provide the type and function designation where specified in paragraph entitled "Hardware Schedule". A set shall include head and jamb seals, sweep strips, and, for pairs of doors, astragals.

2.2.12.1 Door Gasketing

General: Provide continuous weather-strip gasketing on exterior doors and provide smoke, light, or sound gasketing on interior doors where indicated or scheduled. Provide noncorrosive fasteners for exterior applications and elsewhere as indicated.

1. Perimeter Gasketing: Apply to head and jamb, forming seal between door and frame.

2. Meeting Stile Gasketing: Fasten to meeting stiles, forming seal when doors are closed.

3. Door Bottoms: Apply to bottom of door, forming seal with threshold when door is closed.

2.2.12.2 Door Sweeps

Door Sweeps: Gasket material held in place by flat metal housing or flange; surface mounted to face of door with screws.

1. Gasket Material: Brush as standard with manufacturer.
2. Housing Material: Housing metal as standard with manufacturer.

2.2.13 Overhead Rain Drips

Approximately 38 mm high by 64 mm projection, with length equal to overall width of door frame. Align bottom with door frame rabbet.

2.2.14 Special Tools

Provide special tools, such as spanner and socket wrenches and dogging keys, required to service and adjust hardware items.

2.2.15 Miscellaneous Hardware

Provide the following as required:

Swing Door Roller Lockset

2.3 FASTENERS

Provide fasteners of proper type, quality, size, quantity, and finish with hardware. Fasteners exposed to weather shall be of nonferrous metal or stainless steel. Provide fasteners of type necessary to accomplish a permanent installation.

2.4 FINISHES

Hardware shall have satin stainless steel finish, unless specified otherwise. Provide items not manufactured in stainless steel in satin chromium plated over brass or bronze finish, except surface door closers which shall have aluminum paint finish. Hinges for exterior doors shall be stainless steel or chromium plated brass or bronze finish. Exit devices may be provided in aluminum color or bronze finish in lieu of stainless steel finish. Exposed parts of concealed closers shall have finish to match lock and door trim.

PART 3 EXECUTION

3.1 INSTALLATION

Install hardware in accordance with manufacturers' printed instructions. Provide machine screws set in expansion shields for fastening hardware to solid masonry surfaces. Provide toggle bolts where required for fastening to hollow core construction. Provide through bolts where necessary for satisfactory installation.

3.1.1 Weather Stripping Installation

Handle and install weather stripping so as to prevent damage. Provide full contact, weather-tight seals. Doors shall operate without binding.

3.2 EXIT DOORS

Install hardware in accordance with NFPA 101.

3.3 FIRE DOORS AND EXIT DOORS

Install hardware in accordance with NFPA 80 for fire doors.

3.4 HARDWARE LOCATIONS

As indicated on Drawings.

a. Kick and Armor Plates: Push side of single-acting doors. Both sides of double-acting doors.

3.5 FIELD QUALITY CONTROL

After installation, protect hardware from paint, stains, blemishes, and other damage until acceptance of work. Submit notice of testing 15 days before scheduled, so that testing can be witnessed by the Government. Adjust hinges, locks, latches, bolts, holders, closers, and other items to operate properly. Demonstrate that permanent keys operate respective locks, and give keys to the Government . Correct, repair, and finish, as directed, errors in cutting and fitting and damage to adjoining work.

3.6 HARDWARE SCHEDULE

DH-1 Exterior Entrance Doors (each pair)

3 Pair Hinges
1 Lockset - Office/Bedroom function
1 set Flush bolts for inactive leaf
2 Closers
2 Kick Plates
2 Floor Stops
1 Overhead Rain Drip
1 Set Weatherstripping
2 Handles

DH-1A Exterior Entrance Doors (each pair) - Dining Facility Room 101 and Training Building

3 Pair Hinges
2 Exit Devices
2 Closers
2 Kick Plates
2 Floor Stops
1 Overhead Rain Drip
1 Set Weatherstripping
1 Handle

DH-2 Exterior Vestibule or Corridor Single Doors (each leaf)

1-1/2 Pair Hinges
1 Lockset - Office/Bedroom function
1 Closer
1 Kick Plate
1 Floor Stop
1 Overhead Rain Drip
1 Set Weatherstripping

DH-3 Exterior Egress Doors (each leaf)

1-1/2 Pair Hinges
1 Lockset office/Bedroom function.
1 Closer
1 Kick Plate
1 Floor Stop
1 Overhead Rain Drip
1 Set Weatherstripping

DH-3A Exterior Egress Doors (each leaf) - Training Building

1-1/2 Pair Hinges

1 Exit Device
1 Closer
1 Kick Plate
1 Floor Stop
1 Overhead Rain Drip
1 Set Weatherstripping

DH-4 Exterior Double Doors (each pair)

3 Pair Hinges
1 Lockset - Office/Bedroom function
1 Handle
1 Set Door Bolts (Inactive leaf)
2 Stops
1 Overhead Rain Drip (except at screen doors D-10 and D-11)
1 Set Weatherstripping

DH-5 Interior Single Doors (each pair) - Not Used

DH-6 Interior Double Doors (each pair)

3 Pair Hinges
1 Lockset - Office/Bedroom function
1 Closer on Active Door (Not required at BOQ closets)
2 Door Stops
1 Set Door Bolts
1 Handle

DH-7 Interior Single Doors (each leaf)

1-1/2 Pair Hinges
1 Lockset - Office/Bedroom function
1 Closer (Administrative and Computer Rooms only)
1 Door Stop

DH-8 Kitchen Double Action Door

1-1/2 Pair Spring Hinges
2 Push Plates
2 Armor Plates

DH-9 Toilet Room Entrance Door

1-1/2 Pair Hinges
1 Dead lock
1 Push Plate
1 Pull
1 Closer

DH-10 Toilet Cubicle Doors

1-1/2 Pair Hinges
1 Lockset - Privacy function
1 Handle

DH-11 Interior Double Egress Doors (each pair)

3 Pair Hinges - centered in frame to allow doors opening in opposite directions to close to a single flush plane.

1 Closer on each leaf operating in opposite directions
2 Door Stops
1 Handle per leaf

-- End of Section --

SECTION 08810

GLASS AND GLAZING

PART 1 GENERAL

1.1 REFERENCES

The publications listed below form a part of this specification to the extent referenced. The publications are referred to in the text by basic designation only.

AMERICAN NATIONAL STANDARDS INSTITUTE (ANSI)

ANSI Z97.1	(1984; R 1994) Safety Performance Specifications and Methods of Test for Safety Glazing Materials Used in Buildings

ASTM INTERNATIONAL (ASTM)

ASTM C 920	(2002) Elastomeric Joint Sealants
ASTM C 1036	(1991; R 1997) Flat Glass
ASTM E 1300	(1998) Determining the Minimum Thickness and Type of Glass Required to Resist a Specified Load

1.2 SUBMITTALS

Government approval is required for submittals with a "G" designation; submittals not having a "G" designation are for information only. When used, a designation following the "G" designation identifies the office that will review the submittal for the Government. The following shall be submitted in accordance with Section 01330 SUBMITTAL PROCEDURES:

SD-02 Shop Drawings

Installation

Drawings showing complete details of the proposed setting methods, mullion details, edge blocking, size of openings, frame details, materials, and types and thickness of glass.

SD-03 Product Data

Insulating Glass

Documentation for Energy Star qualifications.

Plastic Glazing

Glazing Accessories

Manufacturer's descriptive product data, handling and storage

recommendations, installation instructions, and cleaning instructions.

SD-04 Samples

Insulating Glass

Plastic Sheet

Glazing Compound

Glazing Tape

Sealant

Two 203 x 254 mm samples of each of the following: tinted glass, patterned glass, heat-absorbing glass, and insulating glass units.

Three samples of each indicated material. Samples of plastic sheets shall be minimum 125 by 175 mm .

SD-07 Certificates

Insulating Glass

Plastic Glazing

Certificates stating that the glass meets the specified requirements. Labels or manufacturers marking affixed to the glass will be accepted in lieu of certificates.

SD-08 Manufacturer's Instructions

Setting and sealing materials

Glass setting

Submit glass manufacturer's recommendations for setting and sealing materials and for installation of each type of glazing material specified.

1.3 SYSTEM DESCRIPTION

Glazing systems shall be fabricated and installed watertight and airtight to withstand thermal movement and wind loading without glass breakage, gasket failure, deterioration of glazing accessories, and defects in the work. Glazed panels shall comply with the safety standards, as indicated in accordance with ANSI Z97.1. Glazed panels shall comply with indicated wind/snow loading in accordance with ASTM E 1300.

1.4 DELIVERY, STORAGE AND HANDLING

Glazing compounds shall be delivered to the site in the manufacturer's unopened containers. Glass shall be stored indoors in a safe, well ventilated dry location in accordance with manufacturer's instructions, and shall not be unpacked until needed for installation. Glass shall not be stored on site over 1 month.

1.5 PROJECT/SITE CONDITIONS

Glazing work shall not be started until outdoor temperature is above 5 degrees C and rising, unless procedures recommended by glass manufacturer and approved by Government are made to warm the glass and rabbet surfaces. Ventilation shall be provided to prevent condensation of moisture on glazing work during installation. Glazing work shall not be performed during damp or raining weather.

PART 2 PRODUCTS

2.1 FLAT GLASS

Untreated glass shall be type I transparent flat type, Class 1 - clear quality q4 or q3, conforming to ASTM C 1036.

2.2 WIRED GLASS

Wired glass shall be Type II flat type, Class 1 - translucent , Quality q8 - glazing, Form 1 - wired and polished both sides. Wire mesh shall be polished stainless steel Mesh 1 - diamond or 2 - square. Wired glass for fire-rated windows shall bear an identifying UL label or the label of a nationally recognized testing agency, and shall be rated for 45 minutes when tested in accordance with DIN, BS, or EN standards. Wired glass for fire-rated doors shall be tested as part of a door assembly in accordance with DIN, BS, or EN stardards.

2.3 HEAT-TREATED GLASS

Heat-treated glass shall conform to the following requirements.

2.3.1 Tempered Glass

Tempered glass shall be kind FT fully tempered transparent flat type, Class 1-clear, Condition A uncoated surface, Quality q3 - glazing select, conforming to DIN, BS, or EN standards. Color shall be clear.

2.3.2 Heat-Strengthened Glass

Heat-strengthened glass shall be kind HS heat-strengthened transparent flat type, Class 1-clear, Condition A uncoated surface, Quality q3 - glazing select, conforming to DIN, BS, or EN standards. Color shall be clear.

2.4 GLAZING ACCESSORIES

2.4.1 Sealant

Sealant shall be elastomeric conforming to ASTM C 920, Type S or M, Grade NS, Class 12.5, Use G, of type chemically compatible with setting blocks, preformed sealing tape and sealants used in manufacturing insulating glass. Color of sealant shall be as selected from manufacturer's full range of standard colors by Government.

2.4.2 Glazing Gaskets

Glazing gaskets shall be extruded with continuous integral locking projection designed to engage into metal glass holding members to provide a watertight seal during dynamic loading, building movements and thermal movements.

2.4.3 Setting and Edge Blocking

Profiles, lengths and locations shall be as required and recommended by glass manufacturer.

PART 3 EXECUTION

3.1 PREPARATION

Detrimental materials shall be removed from glazing rabbet and glass surfaces and wiped dry with solvent. Glazing surfaces shall be dry and free of frost.

3.2 INSTALLATION

Glass and glazing work shall be performed in accordance with glass manufacturer's instructions and warranty requirements. Glass shall be installed with factory labels intact and removed only when instructed. Edges and corners shall not be ground, nipped or cut after leaving factory. Springing, forcing or twisting of units during installation will not be permitted.

3.3 CLEANING

Upon completion of project, outside surfaces of glass shall be washed clean and the inside surfaces of glass shall be washed and polished in accordance with glass manufacturer's recommendations.

3.4 PROTECTION

Glass work shall be protected immediately after installation. Glazed openings shall be identified with suitable warning tapes, cloth or paper flags, attached with non-staining adhesives. Reflective glass shall be protected with a protective material to eliminate any contamination of the reflective coating. Protective material shall be placed far enough away from the coated glass to allow air to circulate to reduce heat buildup and moisture accumulation on the glass. Glass units which are broken, chipped, cracked, abraded, or otherwise damaged during construction activities shall be removed and replaced with new units.

-- End of Section --

SECTION 09100

METAL SUPPORT ASSEMBLIES

PART 1 GENERAL

1.1 REFERENCES

The publications listed below form a part of this specification to the extent referenced. The publications are referred to in the text by the basic designation only.

ASTM INTERNATIONAL (ASTM)

ASTM A 463/A 463M	(2000) Steel Sheet, Aluminum-Coated, by the Hot-Dip Process
ASTM A 500	(1999) Cold-Formed Welded and Seamless Carbon Steel Structural Tubing in Rounds and Shapes
ASTM A 513	(2000) Electric-Resistance-Welded Carbon and Alloy Steel Mechanical Tubing
ASTM A 653/A 653M	(2001a) Steel Sheet, Zinc-Coated (Galvanized) or Zinc-Iron Alloy-Coated (Galvannealed) by the Hot-Dip Process
ASTM C 645	(2000) Nonstructural Steel Framing Members
ASTM C 754	(1999a) Installation of Steel Framing Members to Receive Screw-Attached Gypsum Panel Products
ASTM C 841	(1999) Installation of Interior Lathing and Furring

AMERICAN WELDING SOCIETY (AWS)

AWS D1.1/D1.1M	(1998) Structural Welding Code - Steel

DUETSCHES INSTITUTE FUR NORMUNG (DIN)

DIN 18182	Accessoires for use with gypsum plasterboards; steel plate sections

1.2 SUBMITTALS

Government approval is required for submittals with a "G" designation; submittals not having a "G" designation are for information only. When used, a designation following the "G" designation identifies the office that will review the submittal for the Government. The following shall be submitted in accordance with Section 01 33 00 SUBMITTAL PROCEDURES:

SD-02 Shop Drawings

Metal support systems; G AED

Submit for the erection of metal framing, furring, and ceiling suspension systems. Indicate materials, sizes, thicknesses, and fastenings.

1.3 DELIVERY, STORAGE, AND HANDLING

Deliver materials to the job site and store in ventilated dry locations. Storage area shall permit easy access for inspection and handling. If materials are stored outdoors, stack materials off the ground, supported on a level platform, and fully protected from the weather. Handle materials carefully to prevent damage. Remove damaged items and provide new items.

PART 2 PRODUCTS

2.1 MATERIALS

Provide steel materials for metal support systems with galvanized coating ASTM A 653/A 653M, Z180; aluminum coating ASTM A 463/A 463M, T1-75 ; or a 55-percent aluminum-zinc coating. Galvanized, aluminum, or 0.5 mm hot dip zinc cated steel sheets according to DIN 18182-Z100(100gr/m2), BS, or EN standards are also acceptable.

2.1.1 Materials for Attachment of Lath

2.1.1.1 Framed Ceiling Systems

ASTM C 841 or DIN 18182. Steel Studs: Cold-formed steel sheet with minimum yield strength of not less than 230 MPa, but not thinner than 0.85 mm thickness.

Connections: Self-drilling, self-tapping, corrosion-resistant steel screws

2.1.1.2 Furred (Sloped only) Ceiling Systems

Steel Tubing: ASTM A 500 or ASTM A 513; sizes and wall thicknesses as indicated.

2.1.2 Materials for Attachment of Gypsum Wallboard

2.1.2.1 Framed Ceiling Systems

ASTM C 645 . Steel Studs: Cold-formed steel sheet with minimum yield strength of not less than 230 MPa. Deflection shall be limited to l/360 member span.

2.1.2.2 Nonload-Bearing Wall Framing and Furring

ASTM C 645, but not thinner than 0.45 mm thickess, with 0.85 mm minimum thickness supporting wall hung items such as cabinetwork, equipment and fixtures 0.85 mm thickness.

Connections: Self-drilling, self-tapping, corrosion-resistant steel screws

2.2 SUSPENDED CEILING FRAMING

Suspended ceiling framing system shall have the capability to support the finished ceiling, light fixtures, air diffusers, and accessories, as shown. The suspension system shall have a maximum deflection of L/240. Carrying channels shall be formed from minimum 1.40 mm thick cold-rolled steel, 38

mm wide by 11 mm deep. Cross furring members shall conform to ASTM C 645, and shall be formed from cold-rolled steel, 19 mm wide by 11 mm deep. Carrying channels and furring members shall be made from hot-dip galvanized coated sheet.

2.3 TRIM, MOLDINGS, AND ACCESSORIES

2.3.1 Hangers

Suspended ceiling runner channel hangers shall be soft, annealed steel wire not less than No. 8 SWG nominal diameter.

2.3.2 Fastenings

Tie wire, rings, and other fastenings shall be corrosion-resisting steel.

2.3.2.1 Tie Wire

Tie wire for securing metal lath to supports, and for lacing shall be not less than No. 18 SWG diameter. Tie wire for all other applications shall be not less than No. 16 SWG diameter.

2.3.2.2 Clips

Clips used in lieu of tie wire for securing furring channels to the runner channels in ceiling construction shall be made from strips not less than 3 mm thick or shall be hairpin clip formed of No. 8 SWG wire. Other clips and rings or fastenings of similar materials shall be equivalent in holding power to that provided by tie wire for the specific application.

PART 3 EXECUTION

3.1 INSTALLATION

3.1.1 Systems for Attachment of Lath

3.1.1.1 Framed Ceiling Systems

ASTM C 841, except that framing members shall be 400 mm o.c. unless indicated otherwise.

3.1.1.2 Furred (Sloped only) Ceiling Framing Installation

Steel tubes at continuous furred, sloped plaster ceilings shall be applied directly to structural steel members and secured thereto by welding, each side for full width/length of interface. Space steel tubes as indicated. Welding shall be in accordance with AWS D1.1/D1.1M. Locate butt-welded splices at structural steel members only, staggered in adjacent rows.

3.1.2 Systems for Attachment of Gypsum Wallboard

3.1.2.1 Framed Ceiling Systems

ASTM C 754, except that framing members shall be 400 mm o.c. unless indicated otherwise.

3.2 SUSPENDED CEILING FRAMING INSTALLATION

Suspended system shall be installed in accordance with ASTM C 841. Where

channels are spliced, the ends shall be overlapped not less than 300 mm for 38 mm channels and not less than 200 mm for 20 mm channels with flanges of channels interlocked and securely tied near each end of the splice with two loops of the tie wire. Splices shall be staggered.

3.2.1 Hangers

Wire or strap hangers shall be attached to structural members in accordance with ASTM C 841, except hangers shall be spaced not more than 1220 mm along runner channels and 900 mm in the other direction or 1050 mm in both directions unless otherwise indicated or approved. Locations of hangers shall be coordinated with other work. Hangers at ends of runner channels shall be located not more than 150 mm from wall. Hanger wire shall be looped around bottom chord of open-web steel joist or secured to structural elements with suitable fasteners. Sags or twists in the suspended system shall be adjusted. Damaged or faulty parts shall be replaced.

3.2.2 Main Runners

Main runner channels shall be installed in accordance with ASTM C 841. Hanger wire shall be saddle-tied to runner channels, and the end of hanger wires shall be twisted three times around itself. Main runners shall not come in contact with abutting masonry or concrete walls and partitions. Main runners shall be located within 150 mm of the paralleling wall to support the ends of cross furring.

3.2.3 Furring Channels

Furring channels shall be spaced in accordance with ASTM C 841 for the type of lath used. Furring channels shall be securely saddle-tied to the runner channels and to structural supports at each crossing with tie wire, hairpin clips, or equivalent clips or fastenings. Furring channels shall be located within 50 mm of parallel walls and beams, and 15 mm from abutting walls. When gypsum lath is used on ceilings, hat-shaped sheetmetal furring channels may be used in lieu of 19 mm rolled steel furring channels. Gypsum lath shall be screw-applied at 200 mm on centers along supports and not less than 10 mm from edges of lath.

3.2.4 Light Fixtures and Air Diffusers

Light fixtures and air diffusers shall be supported directly from suspended ceiling runners. Wires shall be provided at appropriate locations to carry the weight of recessed or surface mounted light fixtures and air diffusers.

3.3 ERECTION TOLERANCES

Framing members which will be covered by finish materials such as wallboard, or plaster, shall be within the following limits:

a. Studs: 5 mm in 1.9 meters out of level, not cumulative; and

b. Face of framing members: 5 mm in 1.9 meters from a true plane.

-- End of Section --

SECTION 09225

CEMENT PLASTER

PART 1 GENERAL

1.1 REFERENCES

The publications listed below form a part of this specification to the extent referenced. The publications are referred to in the text by basic designation only.

ASTM INTERNATIONAL (ASTM)

ASTM A 185	(1997) Steel Welded Wire Fabric, Plain, for Concrete Reinforcement
ASTM C 150	(2002) Portland Cement
ASTM C 926	(1998a) Application of Portland Cement-Based Plaster

1.2 SUBMITTALS

Government approval is required for submittals with a "G" designation; submittals not having a "G" designation are for information only. When used, a designation following the "G" designation identifies the office that will review the submittal for the Government. Submit the following in accordance with Section 01330 SUBMITTAL PROCEDURES:

SD-03 Product Data

Plaster accessories

1.3 DELIVERY AND STORAGE

Packaged materials shall be delivered to the site in the original packages and containers with labels intact and seals unbroken. Cementitious materials shall be kept dry and stored off the ground under cover away from damp surfaces until ready to be used. Aggregate shall be covered to prevent the absorption or loss of moisture.

1.4 ENVIRONMENTAL CONDITIONS

Cement plaster shall not be applied when the ambient temperature is 4 degrees C or lower, or when a drop in temperature below 4 degrees C is expected within 48 hours after application.

PART 2 PRODUCTS

2.1 PORTLAND CEMENT

Portland cement shall conform to ASTM C 150, gray portland cement Type I or II.

2.2 CEMENT PLASTER COATS

Cement plaster coats shall be a field mixed product using portland cement and requiring the addition of and mixing with water for application. Add polypropylene fibers per manufacturer's recommendations

Basis of Design: Rheofibre by Degussa.

2.3 LIME

Lime shall be special hydrated finishing lime composed primarily of calcuim and magnesium oxides and suitable for use in cement plaster base coats.

2.4 SAND

Sand aggregate for job-mixed base coat cement plaster shall be natural or manufactured sand suitable for use in cement plaster.

2.5 METAL LATH

2.5.1 Woven Wire Lath (Chicken Wire)

Lath shall be flat base type with stiffeners, with backing fabricated from copper-bearing, cold-drawn, galvanized steel wire not less than 1.40 mm (0.0548 in), thick with openings not to exceed 50 x 50 mm.

2.6 ACCESSORIES

Accessories shall be roll formed galvanized steel, except that cornerite and striplath shall be formed from steel sheets with manufacturer's standard galvanized coating. Welded wire corner reinforcements shall be zinc coated, galvanized 1.4 mm (17 gauge) steel wire conforming to ASTM A 185.

2.6.1 Fastenings

Tie wire, rings, and other fastenings shall be corrosion-resisting stainless steel or nickel-copper alloy. Walls, partitions, and other vertical surfaces not incorporated in ceiling construction may be erected with soft, annealed steel.

2.6.1.1 Tie Wire

Tie wire for for lacing shall be not less than 1.22 mm diameter. Tie wire for all other applications shall be not less than 1.57 mm diameter.

2.6.2 Expanded Flange Corner Beads

Expanded flange corner beads shall be fabricated of 0.50 mm thick (0.0210 in) galvanized steel, with 64 mm wide flanges and 3 mm wide bead.

2.6.3 Cornerites

Cornerites shall be fabricated of galvanized expanded metal lath to form an angle of at least 100 degrees, with outstanding legs of not less than 50 mm.

2.6.4 Striplath

Striplath shall be fabricated of galvanized steel sheet, 1.4 kg per square

meter.

2.6.5 Casing Beads

Casing beads shall be fabricated of galvanized 0.70 mm (0.0276 inch) thick steel 19 mm depth, minimum 50 mm wide expansion wings, front edge of face flange shaved for intended use, back slightly arched to provide a spring effect.

2.6.6 Control Joints

Control joints shall be designed for expansion and contraction of plaster work due to thermal exposure. Control joints shall comprise of back-to-back casing beads.

2.6.7 Screws

Screws shall be self-drill steel.

2.7 WATER

Water shall be clean, fresh, and free from amounts of oils, acids, alkalis and organic matter that would be injurious to the cement plaster.

2.8 FINISH

Paint for cement plaster shall be per Section 09900.

PART 3 EXECUTION

3.1 PREPARATION OF SURFACES

Preparation of surfaces for application of cement plaster to masonry shall conform to the applicable requirements of ASTM C 926.

3.2 LATHING INSTALLATION

3.2.1 Metal Lath

Metal lath shall be applied with the long dimension across the supports, with true even surfaces, and without sags or buckles. The lath shall be secured to supports at intervals not exceeding 150 mm. Nails or staples shall be used for securing lath to wood supports. Side-laps shall be tied or otherwise secured at intervals not exceeding 225 mm between supports, in addition to being secured to supports.

3.2.2 Side and End Laps

Side and end laps of metal plaster bases shall be one full mesh.

3.3 OPENINGS

Reinforcement shall be provided at corners of openings in plastered areas extending 300 mm or more in any dimension by securing striplath diagonally at corners. Striplath shall be at least 150 mm wide by 400 mm long. Shorter lengths shall be used to preclude lapping striplath. Striplath shall be secured to lathing without extending fastenings into or around supporting members. Where plaster is applied directly to masonry surfaces, striplath shall be secured to the masonry.

3.4 CONTROL JOINTS

Furring shall be installed to true lines and surfaces and shall be rigidly supported and secured in place.

3.4.1 Installation Of Trim, Moldings, And Accessories

Trim, moldings, and accessories shall be installed in standard lengths level and plumb to straight lines, rigidly supported and secured in place, and as indicated on drawings. Fastenings shall be spaced not over 300 mm on centers for single-flanged accessories and not over 600 mm on centers on each flange of double-flanged accessories. Items shall be mitered or coped at corners, or prefabricated corners shall be used. Joints in straight runs shall be formed with splice or tie plates.

3.5 CORNER BEADS

Corner beads shall be installed in standard lengths at external plastered corners, and shall be secured to furring members or supports.

3.6 CORNERITES

Cornerites shall be installed at internal angles formed by abutting surfaces of metal lath not turned down at horizontal corners or returned around vertical corners. Cornerites shall be secured to lathed surfaces. Cornerites shall be secured to masonry where plaster is applied directly to masonry surfaces. Cornerites shall not be installed at unrestrained ceilings.

3.7 CASING BEADS

Casing beads shall be installed at the joints of dissimilar base materials in the same plane and at exposed edges of plaster including junctions of walls and ceilings except that beads shall not be installed at restrained ceilings abutting plastered surfaces. At the perimeter of unrestrained suspended ceilings, the casing bead shall be secured to the ceiling to provide a 10 mm opening between the abutting surfaces. The opening shall be sealed prior to plastering with sealant as specified in Section 07900 JOINT SEALING.

3.8 EXPANSION AND CONTROL JOINTS

Expansion joint shall be installed in plasterwork at the locations indicated or not more than 5 m on center. Plaster base shall not be run continuous through control joints. Additional supports shall be installed as required to support expansion and control joints.

3.9 TRIM

Trim shall be installed where indicated and as required to complete the plaster work.

3.10 PROPORTIONS AND MIXING

Proportions and mixing for job-mixed base coats shall conform to the requirements of ASTM C 926. Mixing of mill-mixed finish coat shall be in accordance with the manufacturer's directions.

3.11 CEMENT PLASTER APPLICATION

Cement plaster shall be applied in two coats to a total thickness of 20 mm as measured from the face of solid backing to the finished surface, including moderate texture variations. Cement plaster application shall conform to the applicable requirements of ASTM C 926 and the following:

3.11.1 Workmanship

Items or features of the work in connection with or adjoining the cement plaster shall be in place, plumb, straight, and true prior to beginning the cement plaster work. Masonry surfaces to receive cement plaster shall be evenly dampened immediately prior to application of cement plaster. Each cement plaster coat shall be applied continuously in one general direction, without allowing mortar to dry at edges. Where it is impossible to work the full dimension of a wall surface in a continuous operation, jointing shall be made at a break, opening, or other natural division of the surface. Edges to be joined shall be dampened slightly to produce a smooth confluence. Corners of cement plaster shall be slightly rounded.

3.11.2 Scratch Coat

Scratch coat shall be applied approximately 10 mm thick under sufficient pressure to form good keys and to completely embed the reinforcement. Before the scratch coat has set, it shall be lightly scratched in one direction and vertical surfaces shall be scratched in the horizontal direction only. The scratch coat shall be fog cured for a minimum of 72 hours.

3.11.3 Finish Coat

Surfaces of the scratch coat shall be dampened not more than 1 hour before the finish coat is to be applied to a uniform wetness with no free-standing water on the surface. The finish coat shall have a float finish and shall conform to the approved sample. The finish coat shall be fog cured for a minimum of 48 hours. Care shall be taken to prevent staining.

3.11.4 Surface Tolerance

When a 3 m straightedge is placed at any location on the finished surface of the cement plaster, excluding rough-textured finish, the surface shall not vary more than 3 mm from the straightedge.

3.11.5 Finishing cement plaster

Paint exterior cement plaster flat tan and interior cement plaster semi-gloss off-white per Section 09900.

3.12 CURING AND PROTECTION

Fog curing shall be accomplished by applying a fine mist of water to the cement plaster. Care shall be exercised during fog curing to avoid erosion damage to the cement plaster surfaces. A solid stream of water shall not be used. Frequency of fogging shall be not less than three times daily. When directed the Contractor shall protect the cement plaster from the direct rays of the sun during severe drying conditions using canvas, cloth or other approved sheet material.

3.13 PATCHING AND POINTING

Loose, cracked, damaged or defective work shall be replaced or patched as directed. Patching shall match existing work in texture and color and shall be finished flush.

-- End of Section --

SECTION 09250

GYPSUM BOARD

PART 1 GENERAL

1.1 REFERENCES

The publications listed below form a part of this specification to the extent referenced. The publications are referred to in the text by the basic designation only.

ASTM INTERNATIONAL (ASTM)

ASTM C 36/C 36M	(1999) Gypsum Wallboard
ASTM C 630/C 630M	(2001) Water-Resistant Gypsum Backing Board
ASTM C 1396/C 1396M	(2000) Standard Specification for Gypsum Board

1.2 SUBMITTALS

Government approval is required for submittals with a "G" designation; submittals not having a "G" designation are for information only. When used, a designation following the "G" designation identifies the office that will review the submittal for the Government. Submit the following in accordance with Section 01330 SUBMITTAL PROCEDURES:

SD-03 Product Data

Cementitious backer units

Glass Mat Water-Resistant Gypsum Tile Backing Board

Water-Resistant Gypsum Backing Board

Glass Mat Covered or Reinforced Gypsum Sheathing

Glass Mat Covered or Reinforced Gypsum Sheathing Sealant

Impact Resistant Gypsum Board

Accessories

Submit for each type of gypsum board and for cementitious backer units.

Gypsum Board

Submit documentation indicating percentage of post-industrial and post-consumer recycled content per unit of product. Indicate relative dollar value of recycled content products to total dollar value of products included in project.

Adhesives

Joint Treatment Materials

Submit manufacturer's product data, indicating VOC content.

Environmental Data

SD-04 Samples

Predecorated gypsum board; G AED

Submit for each color and pattern of predecorated gypsum board. Where colors are not indicated, submit color selection samples of not less than eight of the manufacturer's standard colors.

SD-07 Certificates

Asbestos Free Materials; G AED

Certify that gypsum board types, gypsum backing board types, cementitious backer units, and joint treating materials do not contain asbestos.

SD-08 Manufacturer's Instructions

Material Safety Data Sheets

SD-10 Operation and Maintenance Data

Manufacturer maintenance instructions

Waste Management

1.3 DELIVERY, STORAGE, AND HANDLING

1.3.1 Delivery

Deliver materials in the original packages, containers, or bundles with each bearing the brand name, applicable standard designation, and name of manufacturer, or supplier.

1.3.2 Storage

Keep materials dry by storing inside a sheltered building. Where necessary to store gypsum board units outside, store off the ground, properly supported on a level platform, and protected from direct exposure to rain, snow, sunlight, and other extreme weather conditions. Provide adequate ventilation to prevent condensation.

1.3.3 Handling

Neatly stack gypsum board units flat to prevent sagging or damage to the edges, ends, and surfaces.

1.4 ENVIRONMENTAL CONDITIONS

1.4.1 Temperature

Maintain a uniform temperature of not less than 10 degrees C in the structure for application of gypsum board, and joint treatment materials.

1.4.2 Exposure to Weather

Protect gypsum board unit products from direct exposure to rain, snow, sunlight, and other extreme weather conditions.

PART 2 PRODUCTS

2.1 MATERIALS

Conform to specifications, standards and requirements specified herein. Provide gypsum board types, gypsum backing board types, and joint treating materials manufactured from asbestos free materials only.

2.1.1 Gypsum Board

ASTM C 36/C 36M, or ASTM C 1396/C 1396M.

2.1.1.1 Regular

1200 mm wide, 12.5 mm thick, square or tapered edges.

2.1.2 Regular Water-Resistant Gypsum Backing Board

ASTM C 630/C 630M.

1200 mm wide, 12.5 mm thick, square or tapered edges.

2.1.3 Joint Treatment Materials

As recommended by gypsum board manufacturer.

2.1.3.1 Embedding Compound

Formulated and manufactured for use in embedding tape at gypsum board joints and compatible with tape, substrate and fasteners.

2.1.3.2 All-Purpose Compound

Formulated and manufactured to serve as both a taping and a finishing compound and compatible with tape, substrate and fasteners.

2.1.3.3 Setting or Hardening Type Compound

Formulated and manufactured for use with tape.

2.1.3.4 Joint Tape

As recommended by the gypsum board manufacturer.

2.1.3.5 Corner Tape

As recommended by gypsum board manufacturer.

2.1.4 Fasteners

2.1.4.1 Screws

Steel drill screws for fastening gypsum board to gypsum board, wood framing

members and steel framing members.

2.1.5 Adhesives

Do not use adhesive containing benzene, carbon tetrachloride, or trichloroethylene.

2.1.6 Water

Clean and fresh.

PART 3 EXECUTION

3.1 EXAMINATION

3.1.1 Framing and Furring

Verify that framing and furring are securely attached and of sizes and spacing to provide a suitable substrate to receive gypsum board.

3.2 APPLICATION OF GYPSUM BOARD

Apply gypsum board to framing and furring members in accordance with the requirements specified herein. Apply gypsum board with separate panels in moderate contact; do not force in place. Stagger end joints of adjoining panels. Neatly fit abutting end and edge joints. Use gypsum board of maximum practical length. Cut out gypsum board as required to make neat close joints around openings. Surfaces of gypsum board and substrate members may be bonded together with an adhesive, except where prohibited by fire rating(s). Treat edges of cutouts for plumbing pipes, screwheads, and joints with water-resistant compound as recommended by the gypsum board manufacturer. Provide type of gypsum board for use in each system specified herein as indicated.

3.2.1 Application to Masonry or Concrete Walls

Apply furring to face of cementitious wall. Attach dry wall to ensure that gypsum board does not contact cementitious surface.

3.2.2 Application of Gypsum Board to Steel Framing and Furring

Apply in accordance with manufacturer's recommendations and IBC requirements.

3.2.3 Control Joints

Install expansion and contraction joints in ceilings and walls in accordance with manufacturer's recommendations and IBC requirements, unless indicated otherwise.

3.3 FINISHING OF GYPSUM BOARD

Tape and finish gypsum board in accordance with manufacturer's recommendations. Unless otherwise specified, all gypsum board walls, partitions and ceilings shall be finished with skim coat of finishing or topping compound over entire surface. Provide joint, fastener depression, and corner treatment. Do not use fiber glass mesh tape with conventional drying type joint compounds; use setting or hardening type compounds only.

3.4 PATCHING

Patch surface defects in gypsum board to a smooth, uniform appearance, ready to receive finish as specified.

-- End of Section --

SECTION 09310

CERAMIC TILE, QUARRY TILE, AND PAVER TILE

PART 1 GENERAL

1.1 REFERENCES

The publications listed below form a part of this specification to the extent referenced. The publications are referred to in the text by basic designation only.

AMERICAN NATIONAL STANDARDS INSTITUTE (ANSI)

ANSI A108.1A	(1992) Installation of Ceramic Tile in the Wet-Set Method, with Portland Cement Mortar
ANSI A108.1B	(1992) Installation of Ceramic Tile on a Cured Portland Cement Mortar Setting Bed with Dry-Set or Latex Portland Cement Mortar
ANSI A108.5	(1992) Installation of Ceramic Tile with Dry-Set Portland Cement Mortar or Latex-Portland Cement Mortar
ANSI A118.1	(1992) Dry-Set Portland Cement Mortar
ANSI A118.4	(1992) Latex-Portland Cement Mortar
ANSI A118.6	(1992) Ceramic Tile Grouts
ANSI A137.1	(1988) Ceramic Tile

ASTM INTERNATIONAL (ASTM)

ASTM C 241	(1997) Abrasion Resistance of Stone Subjected to Foot Traffic

DUETSCHES INSTITUTE FUR NORMUNG (DIN)

DIN EN 87	(1992) Ceramic floor and wall tiles: definitions, classification, characteristics and marking.
DIN 1164	(2000) Special Cement - Compositions, specifications and attestation of conformity.

EUROPEAN COMMITTEE FOR STANDARDIZATION (CEN)

EN 87	(1992) Ceramic floor and wall tiles: definitions, classification, characteristics and marking.
EN 12004	(2002) Adhesives for tiles - Definitions

and specifications (includes amedment A1:2002).

MARBLE INSTITUTE OF AMERICA (MIA)

MIA Design Manual (1991) Design Manual IV Dimensional Stone

1.2 SUBMITTALS

Government approval is required for submittals with a "G" designation; submittals not having a "G" designation are for information only. When used, a designation following the "G" designation identifies the office that will review the submittal for the Government. Submit the following in accordance with Section 01330 SUBMITTAL PROCEDURES:

SD-02 Shop Drawings

Detail Drawings; G AED

Drawings showing ceramic tile pattern [elevations][floor plans].

SD-03 Product Data

Tile; G AED
Setting-Bed; G AED
Mortar, Grout, and Adhesive; G AED

Manufacturer's catalog data and preprinted installation and cleaning instructions.

SD-04 Samples

Tile; G AED
Accessories; G AED
Marble Thresholds; G AED
Grout; G AED

Samples of sufficient size to show color range, pattern, type and joints.

SD-07 Certificates

Tile; G AED
Mortar, Grout, and Adhesive; G AED

Certificates indicating conformance with specified requirements. Furnish a master grade certificate for tile.

1.3 DELIVERY AND STORAGE

Materials shall be delivered to the project site in manufacturer's original unopened containers with seals unbroken and labels and hallmarks intact. Materials shall be kept dry, protected from weather, and stored under cover in accordance with manufacturer's instructions.

1.4 ENVIRONMENTAL REQUIREMENTS

Ceramic tile work shall not be performed unless the substrate and ambient

temperature is at least 10 degrees C and rising. Temperature shall be maintained above 10 degrees C while the work is being performed and for at least 7 days after completion of the work. When temporary heaters are used they shall be vented to the outside to avoid carbon dioxide damage to new tilework.

PART 2 PRODUCTS

2.1 TILE

Tile shall be standard grade conforming to ANSI A137.1 or EN 87, DIN EN 87. Containers shall be grade sealed. Seals shall be marked to correspond with the marks on the signed master grade certificate. Color shall be selected from manufacturer's full range of standard colors by Government.

2.1.1 Glazed Wall Tile

Glazed wall tile and trim shall be cushion edged with matte glaze as selected by Government. Tile shall be 150 x 150 mm. Color shall be selected from manufacturer's full range of standard colors by Government.

2.2 WATER

Water shall be potable.

2.3 MORTAR AND GROUT

Mortar, grout, and adhesive shall conform to the following:

2.3.1 Dry-Set Portland Cement Mortar

ANSI A118.1.

2.3.2 Latex-Portland Cement Mortar

ANSI A118.4 or EN 12004.

2.3.3 Ceramic Tile Grout

ANSI A118.6 or DIN 1164; sand portland cement grout, latex-portland cement grout or commercial portland cement grout.

2.4 MARBLE THRESHOLDS

Marble thresholds shall be of size required by drawings or conditions. Marble shall be Group A as classified by MIA Design Manual. Marble shall have a fine sand-rubbed finish and shall be in color as approved by the Government. Marble abrasion shall be not less than 12.0 when tested in accordance with ASTM C 241.

PART 3 EXECUTION

3.1 PREPARATORY WORK AND WORKMANSHIP

Surface to receive tile shall be inspected and shall conform to the requirements of ANSI A108.1A or ANSI A108.1B for surface conditions for the type setting bed specified and for workmanship. Variations of surface to be tiled shall fall within maximum values shown below:

TYPE	WALLS
Dry-Set Mortar	3 mm in 2.4 meters
Latex portland cement mortar	3 mm in 2.4 meters

3.2 GENERAL INSTALLATION REQUIREMENTS

Tile work shall not be started until roughing in for mechanical and electrical work has been completed and tested, and built-in items requiring membrane waterproofing have been installed and tested.

3.3 INSTALLATION OF WALL TILE

3.3.1 Dry-Set Mortar and Latex-Portland Cement Mortar

Dry-set or Latex-portland cement shall be used to install tile in accordance with ANSI A108.5. Latex portland cement shall be used when installing porcelain ceramic tile.

3.4 INSTALLATION OF MARBLE THRESHOLDS

Thresholds shall be installed where indicated in a manner similar to that of the ceramic tile floor. Thresholds shall be the full width of the opening. Head joints at ends shall not exceed 6 mm in width and shall be grouted full as specified for ceramic tile.

3.5 EXPANSION JOINTS

Joints shall be formed every 5 m and sealed as specified in Section 07900 JOINT SEALING.

3.5.1 Walls

Expansion joints shall be provided at control joints in backing material. Wherever backing material changes, an expansion joint shall be installed to separate the different materials.

3.6 CLEANING AND PROTECTING

Upon completion, tile surfaces shall be thoroughly cleaned in accordance with manufacturer's approved cleaning instructions. Acid shall not be used for cleaning glazed tile.

-- End of Section --

SECTION 09421

TERRAZZO TILE

PART 1 GENERAL

1.1 REFERENCES

The publications listed below form a part of this specification to the extent referenced. The publications are referred to in the text by basic designation only.

ASTM INTERNATIONAL (ASTM)

ASTM C 1028	(1996) Standard Test Method for Determining the Static Coefficient of Friction of Ceramic Tile and Other Like Surfaces by the Horizontal Dynamometer Pull-meter Method
ASTM D 2047	(1999) Static Coefficient of Friction of Polish-Coated Floor Surfaces as Measured by the James Machine

1.2 GENERAL REQUIREMENTS

1.2.1 Standard Products

Materials shall be the standard products of a manufacturer regularly engaged in the manufacture of the material and shall essentially duplicate products that have been in satisfactory use at least 2 years prior to bid opening.

1.2.2 Verification of Dimensions

The Contractor shall become familiar with details of the work, verify dimensions in the field, and shall advise the Government of any discrepancy before performing the work.

1.3 SUBMITTALS

Government approval is required for submittals with a "G" designation; submittals not having a "G" designation are for information only. When used, a designation following the "G" designation identifies the office that will review the submittal for the Government. The following shall be submitted in accordance with Section 01330 SUBMITTAL PROCEDURES:

SD-02 Shop Drawings

Terrazzo Tile; G AED

Drawings indicating pattern, size, style, and color of tiles.

SD-03 Product Data

Installation

The manufacturer's printed installation instructions for the conditions indicated.

SD-04 Samples

Terrazzo Tile
Resilient Base
Terrazzo Base/Strips
Metal Edge Strips

Two 150 by 150 mm minimum samples of each color and pattern of terrazzo tile to be used, one 150 mm long sample of metal edge strip and two 100 mm long samples of each type and color of trim pieces and base.

SD-07 Certificates

Terrazzo Tile
Adhesive
Resilient Base

Certificates indicating that the materials conform to the specified requirements and flooring manufacturer's approval of underlayment, adhesive, and cleaners.

1.3 DELIVERY AND STORAGE

Materials shall be delivered to the jobsite in the manufacturer's original unopened containers marked with the manufacturer's brand name, color, and pattern. Materials delivered and placed in storage shall be stored to protect from damage, weather, dirt and dust, or other contaminants.

1.4 SITE CONDITIONS

Tiles shall not be installed until other work that could cause damage to the finished flooring has been completed.

PART 2 PRODUCTS

2.1 TERRAZZO TILE

Terrazzo tile shall be of the indicated colors and shall consist of aggregate, marble or granite chips embedded in a cementitious matrix. Tiles shall be nominal 300 by 300 mm. Tiles shall have a finish as selected from manufacturer's standard range of textures by Government with uniform color distribution of chips. Tile shall have the following properties per ASTM standard.

TERRAZZO TILE PROPERTIES

PROPERTY	TEST METHOD		VALUE
Coefficient of Friction	ASTM D 2047 ASTM C 1028	or	0.5 wet

2.2 COLOR

Color shall be selected from manufacturer's full range of standard colors by Government.

PART 3 EXECUTION

3.1 GENERAL

Flooring and base shall be provided on floor surfaces where indicated. Except as required for installation of new tile, traffic shall be kept off new tile for at least 24 hours after installation.

3.2 INSTALLATION

3.2.1 Tile

Tile shall be installed in a mortar bed 2 to 3 cm thick on top of a 5 cm thick leveling sand layer. Tile shall be layed symmetrical about center lines of rooms or areas. Joints shall be tight, and in alignment. Tile shall be cut to fit snugly at pipes and other vertical surfaces. Joints at pipes shall be sealed. Entire surface of finished tile floor shall be smooth, straight, and free from bleeding , buckles, waves, or projecting tile edges upon completion. Damaged or rejected tiles shall be removed and replaced. Floor shall slope to floor drains.

3.3 CLEANING

Upon completion of the installation, flooring shall be thoroughly cleaned in accordance with the manufacturer's recommendations.

3.4 PROTECTION

The terrazzo tile work shall be covered and protected from damage until completion of the work of all other trades. Defects which develop, such as loose or broken, shall be removed and replaced.

-- End of Section --

SECTION 09900

PAINTS AND COATINGS

PART 1 GENERAL

1.1 REFERENCES

The publications listed below form a part of this specification to the extent referenced. The publications are referred to within the text by the basic designation only.

AMERICAN CONFERENCE OF GOVERNMENTAL INDUSTRIAL HYGIENISTS (ACGIH)

ACGIH Limit Values	(1991-1992) Threshold Limit Values (TLVs) for Chemical Substances and Physical Agents and Biological Exposure Indices (BEIs)
ACGIH TLV-DOC	Documentation of Threshold Limit Values and Biological Exposure Indices

AMERICAN NATIONAL STANDARDS INSTITUTE (ANSI)

ANSI A13.1	(1996) Scheme for the Identification of Piping Systems

ASTM INTERNATIONAL (ASTM)

ASTM D 523	(1999) Standard Test Method for Specular Gloss
ASTM D 2092	(1995) Preparation of Zinc-Coated (Galvanized) Steel Surfaces for Painting
ASTM D 4263	(1983; R 1999) Indicating Moisture in Concrete by the Plastic Sheet Method
ASTM D 4444	(1998) Standard Test Methods for Use and Calibration of Hand-Held Moisture Meters
ASTM F 1869	(1998) Measuring Moisture Vapor Emission Rate of Concrete Subfloor Using Anhydrous Calcium Chloride

CODE OF FEDERAL REGULATIONS (CFR)

29 CFR 1910.1000	Air Contaminants

MASTER PAINTERS INSTITUTE (MPI)

MPI 107	(2001) Rust Inhibitive Primer (Water-Based)

U.S. DEPARTMENT OF DEFENSE (DOD)

MIL-STD-101	(Rev. B) Color Code for Pipelines and for Compressed Gas Cylinders

THE SOCIETY FOR PROTECTIVE COATINGS (SSPC)

SSPC PA 1	(2000) Shop, Field, and Maintenance Painting
SSPC VIS 1	(1989) Visual Standard for Abrasive Blast Cleaned Steel (Standard Reference Photographs)
SSPC VIS 4	(2001) Guide and Reference Photographs for Steel Surfaces Prepared by Waterjetting
SSPC SP 1	(1982) Solvent Cleaning
SSPC SP 6	(2000) Commercial Blast Cleaning (NACE No. 3)
SSPC SP 7	(2000) Brush-Off Blast Cleaning
SSPC SP 10	(1994; R 1995) Near-White Blast Cleaning
SSPC SP 12	(1995) Surface Preparation and Cleaning of Steel and Other Hard Materials by High-and Ultra high-Pressure Water Jetting Prior to Recoating

Government approval is required for submittals with a "G" designation; submittals not having a "G" designation are for information only. When used, a designation following the "G" designation identifies the office that will review the submittal for the Government. The following shall be submitted in accordance with Section 01330 SUBMITTAL PROCEDURES:

The current MPI, "Approved Product List" which lists paint by brand, label, product name and product code as of the date of contract award, will be used to determine compliance with the submittal requirements of this specification. The Contractor may choose to use a subsequent MPI "Approved Product List", however, only one list may be used for the entire contract and each coating system is to be from a single manufacturer. All coats on a particular substrate must be from a single manufacturer. No variation from the MPI Approved Products List is acceptable.

Samples of specified materials may be taken and tested for compliance with specification requirements.

SD-02 Shop Drawings

Piping identification

Submit color stencil codes

SD-03 Product Data

Coating; G AED

Manufacturer's Technical Data Sheets

Sealant

SD-04 Samples

Color; G AED

Submit manufacturer's samples of paint colors. Cross reference color samples to color scheme as indicated.

Textured Wall Coating System; G AED

Sample Textured Wall Coating System Mock-Up; G AED

SD-07 Certificates

Applicator's qualifications

Qualification Testing laboratory for coatings[; G][; G, [_____]]

SD-08 Manufacturer's Instructions

Application instructions

Mixing

Detailed mixing instructions, minimum and maximum application temperature and humidity, potlife, and curing and drying times between coats.

Manufacturer's Material Safety Data Sheets

Submit manufacturer's Material Safety Data Sheets for coatings, solvents, and other potentially hazardous materials, as defined in

FED-STD-313.

1.2 REGULATORY REQUIREMENTS

1.2.1 Lead Content

Do not use coatings having a lead content over 0.06 percent by weight of nonvolatile content.

1.2.2 Chromate Content

Do not use coatings containing zinc-chromate or strontium-chromate.

1.2.3 Asbestos Content

Materials shall not contain asbestos.

1.2.4 Mercury Content

Materials shall not contain mercury or mercury compounds.

1.2.5 Silica

Abrasive blast media shall not contain free crystilline silica.

1.2.6 Human Carcinogens

Materials shall not contain ACGIH Limit Values and ACGIH TLV-DOC confirmed human carcinogens (A1) or suspected human carcinogens (A2).

1.3 PACKAGING, LABELING, AND STORAGE

Paints shall be in sealed containers that legibly show the contract specification number, designation name, formula or specification number, batch number, color, quantity, date of manufacture, manufacturer's formulation number, manufacturer's directions including any warnings and special precautions, and name and address of manufacturer. Pigmented paints shall be furnished in containers not larger than 20 liters. Paints and thinners shall be stored in accordance with the manufacturer's written directions, and as a minimum, stored off the ground, under cover, with sufficient ventilation to prevent the buildup of flammable vapors, and at temperatures between 4 to 35 degrees C.

1.4 SAFETY AND HEALTH

1.4.1 Toxic Materials

To protect personnel from overexposure to toxic materials, conform to the most stringent guidance of:

a. The applicable Manufacturer's Material Safety Data Sheets (MSDS).

b. 29 CFR 1910.1000.

1.5 ENVIRONMENTAL CONDITIONS

1.5.1 Coatings

Do not apply coating when air or substrate conditions are:

a. Less than 3 degrees C above dew point;

b. Below 10 degrees C or over 35 degrees C, unless specifically pre-approved by the Government and the product manufacturer. Under no circumstances shall application conditions exceed manufacturer recommendations.

1.6 COLOR SELECTION

Colors of finish coats shall be as selected by the Government. Manufacturers' names and color identification are used for the purpose of color identification only. Named products are acceptable for use only if they conform to specified requirements. Products of other manufacturers are acceptable if the colors approximate colors indicated and the product conforms to specified requirements.

Tint each coat progressively darker to enable confirmation of the number of coats.

Color, texture, and pattern of wall coating systems shall be as indicated.

1.7 LOCATION AND SURFACE TYPE TO BE PAINTED

1.7.1 Painting Included

Where a space or surface is indicated to be painted, include the following unless indicated otherwise.

a. Surfaces behind portable objects and surface mounted articles readily detachable by removal of fasteners, such as screws and bolts.

b. New factory finished surfaces that require identification or color coding and factory finished surfaces that are damaged during performance of the work.

c. Existing coated surfaces that are damaged during performance of the work.

1.7.1.1 Exterior Painting

Includes new surfaces of the buildings and appurtenances as indicated. Also included are existing coated surfaces made bare by cleaning operations.

a. Colors:

Exterior Concrete, cement plaster: Tan (flat)
Doors, wood fascia and soffits: Gloss white

1.7.1.2 Interior Painting

Includes new surfaces of the buildings and appurtenances unless specifically excluded and existing coated surfaces made bare by cleaning operations. Where a space or surface is to be painted, include the following items, unless indicated otherwise.

a. Other contiguous surfaces.
b. Colors:

Walls: Off-white (semi-gloss)
Ceilings: White (flat, unless noted otherwise)

1.7.2 Painting Excluded

Do not paint the following unless indicated otherwise.

a. Surfaces concealed and made inaccessible by panelboards.

b. Surfaces in concealed spaces. Concealed spaces are defined as furred spaces, and chases.

c. Steel to be embedded in concrete.

d. Copper, stainless steel, aluminum, and lead.

e. Hardware, fittings, and other factory finished items.

1.7.3 Mechanical and Electrical Painting

Includes field coating of interior and exterior new surfaces.

a. Where a space or surface is indicated to be painted, include the following items unless indicated otherwise.

(1) Exposed piping, conduit, and ductwork;

(2) Supports, hangers, air grilles, and registers;

(3) Miscellaneous metalworks.

1.7.4 Definitions and Abbreviations

1.7.4.1 Coating

A film or thin layer applied to a base material called a substrate. A coating may be a metal, alloy, paint, or solid/liquid suspensions on various substrates (metals, plastics, wood, paper, leather, cloth, etc.). They may be applied by electrolysis, vapor deposition, vacuum, or mechanical means such as brushing, spraying, calendering, and roller coating. A coating may be applied for aesthetic or protective purposes or both. The term "coating" as used herein includes emulsions, enamels, stains, varnishes, sealers, epoxies, and other coatings, whether used as primer, intermediate, or finish coat. The terms paint and coating are used interchangeably.

1.7.4.2 DFT or dft

Dry film thickness, the film thickness of the fully cured, dry paint or coating.

1.7.4.3 DSD

Degree of Surface Degradation, the MPI system of defining degree of surface degradation. Five (5) levels are generically defined under the Assessment sections in the MPI Maintenance Repainting Manual.

1.7.4.4 EXT

Short term designation for an exterior coating system.

1.7.4.5 INT

Short term designation for an interior coating system.

1.7.4.6 micron / microns

The metric measurement for 0.001 mm or one/one-thousandth of a millimeter.

1.7.4.7 mm

The metric measurement for millimeter, 0.001 meter or one/one-thousandth of a meter.

1.7.4.8 MPI, Gloss Levels

Use either the MPI system or DIN system of defining gloss. Traditionally, Flat refers to G1/G2, Eggshell refers to G3, Semigloss refers to G5, and Gloss refers to G6. Use DIN gloss levels as defined in DIN 67 530, equivalent to MPI levels below.

Gloss levels are defined by MPI as follows:

Gloss Level	Description	Units @ 60 degrees	Units @ 85 degrees
G1	Matte or Flat	0 to 5	10 max
G2	Velvet	0 to 10	10 to 35
G3	Eggshell	10 to 25	10 to 35
G4	Satin	20 to 35	35 min
G5	Semi-Gloss	35 to 70	
G6	Gloss	70 to 85	
G7	High Gloss		

Gloss is tested in accordance with ASTM D 523. Historically, the Government has used Flat (G1 / G2), Eggshell (G3), Semi-Gloss (G5), and Gloss (G6).

1.7.4.9 MPI System Number

The MPI coating system number in each Division found in either the MPI Architectural Painting Specification Manual or the Maintenance Repainting Manual and defined as an exterior (EXT/REX) or interior system (INT/RIN). The Division number follows the CSI Master Format.

1.7.4.10 Paint

See Coating definition.

PART 2 PRODUCTS

2.1 MATERIALS

Conform to the coating specifications and standards referenced in PART 3. Submit Manufacturer's Technical Data Sheets for specified coatings and solvents.

2.1.1 Wood Putty: Alkyd-based, quick-drying synthetic putty.

Acceptable Products: SCIB Wood Putty by SCIB Paints.

2.1.2 Surface Filler

Basis of Design: SCIB Unoshield 203 by SCIB Paints.

PART 3 EXECUTION

3.1 PROTECTION OF AREAS AND SPACES NOT TO BE PAINTED

Prior to surface preparation and coating applications, remove, mask, or otherwise protect, hardware, hardware accessories, machined surfaces, radiator covers, plates, lighting fixtures, public and private property, and other such items not to be coated that are in contact with surfaces to be coated. Following completion of painting, workmen skilled in the trades involved shall reinstall removed items. Restore surfaces contaminated by coating materials, to original condition and repair damaged items.

3.2 SURFACE PREPARATION

Remove dirt, splinters, loose particles, grease, oil, and other foreign matter and substances deleterious to coating performance as specified for each substrate before application of paint or surface treatments. Oil and grease shall be removed prior to mechanical cleaning. Cleaning shall be programmed so that dust and other contaminants will not fall on wet, newly painted surfaces. Exposed ferrous metals such as nail heads on or in contact with surfaces to be painted with water-thinned paints, shall be spot-primmed with a suitable corrosion-inhibitive primer capable of preventing flash rusting and compatible with the coating specified for the adjacent areas.

3.3 PREPARATION OF METAL SURFACES

3.3.1 New Ferrous Surfaces

a. Ferrous Surfaces including Shop-coated Surfaces and Small Areas That Contain Rust, Mill Scale and Other Foreign Substances: Solvent clean or detergent wash in accordance with SSPC SP 1 to remove oil and grease. Where shop coat is missing or damaged, clean according to SSPC SP 6. Shop-coated ferrous surfaces shall be protected from corrosion by treating and touching up corroded areas immediately upon detection.

b. Surfaces With More Than 20 Percent Rust, Mill Scale, and Other Foreign Substances: Clean entire surface in accordance with SSPC SP 6/SSPC SP 12 WJ-3 .

3.3.2 Final Ferrous Surface Condition:

For abrasive blast cleaned surfaces, the requirements are stated in SSPC SP 7, SSPC SP 6, and SSPC SP 10. As a visual reference, cleaned surfaces shall be similar to photographs in SSPC VIS 1.

For waterjet cleaned surfaces, the requirements are stated in SSPC SP 12. As a visual reference, cleaned surfaces shall be similar to photographs in SSPC VIS 4.

3.3.3 Galvanized Surfaces

a. New Galvanized Surfaces With Only Dirt and Zinc Oxidation Products: Clean with solvent, steam, or non-alkaline detergent solution in accordance with SSPC SP 1. If the galvanized metal has been passivated or stabilized, the coating shall be completely removed by brush-off abrasive blast. New galvanized steel to be coated shall not be "passivated" or "stabilized" If the absence of hexavalent stain inhibitors is not documented, test as described in ASTM D 2092, Appendix X2, and remove by one of the methods described therein.

3.3.4 Non-Ferrous Metallic Surfaces

Aluminum and aluminum-alloy, lead, copper, and other nonferrous metal surfaces.

a. Surface Cleaning: Solvent clean in accordance with SSPC SP 1 and wash with mild non-alkaline detergent to remove dirt and water soluble contaminants.

3.4 PREPARATION OF CONCRETE AND CEMENTITIOUS SURFACE

3.4.1 Concrete and Masonry

a. Curing: Concrete, and cement plaster surfaces shall be allowed to cure for a minimum of 7 days and as recommended by manufacturer before painting.

b. Surface Cleaning: Remove the following deleterious substances.

(1) Dirt, Grease, and Oil: Wash new surfaces with a solution composed of 0.2 liter trisodium phosphate, 0.1 liter household detergent, and 6.4 liters of warm water. Then rinse thoroughly with fresh water.

(2) Fungus and Mold: Wash new surfaces with a solution composed of 0.2 liter trisodium phosphate, 0.1 liter household detergent, 1.6 liters 5 percent sodium hypochlorite solution and 4.8 liters of warm water. Rinse thoroughly with fresh water.

(3) Paint and Loose Particles: Remove by wire brushing.

(4) Efflorescence: Remove by scraping or wire brushing followed by washing with a 5 to 10 percent by weight aqueous solution of hydrochloric (muriatic) acid. Do not allow acid to remain on the surface for more than five minutes before rinsing with fresh water. Do not acid clean more than 0.4 square meter of surface, per workman, at one time.

c. Cosmetic Repair of Minor Defects: Repair or fill minor defects, including but not limited to spalls, in accordance with manufacturer's recommendations and prior to coating application.

d. Allowable Moisture Content: Latex coatings may be applied to damp surfaces, but not to surfaces with droplets of water. Do not apply epoxies to damp vertical surfaces as determined by ASTM D 4263 or horizontal surfaces that exceed 3 lbs of moisture per 1000 square feet in 24 hours as determined by ASTM F 1869. In all cases follow manufacturers recommendations.

3.4.2 Gypsum Board, Plaster, and Exterior Cement Plaster

a. Surface Cleaning: Plaster and Exterior Cement Plaster shall be clean and free from loose matter; gypsum board shall be dry. Remove loose dirt and dust by brushing with a soft brush, rubbing with a dry cloth, or vacuum-cleaning prior to application of the first coat material. A damp cloth or sponge may be used if paint will be water-based.

b. Repair of Minor Defects: Prior to painting, repair joints, cracks, holes, surface irregularities, and other minor defects with patching plaster or spackling compound and sand smooth.

c. Allowable Moisture Content: Latex coatings may be applied to damp surfaces, but not surfaces with droplets of water. Do not apply epoxies to damp surfaces as determined by ASTM D 4263. New plaster to be coated shall have a maximum moisture content of 8 percent, when measured in accordance with ASTM D 4444, Method A,

unless otherwise authorized. In addition to moisture content requirments, allow new plaster to age a minimum of 7 days before preparation for painting or as recommended by manufacturer.

3.5 PREPARATION OF WOOD AND PLYWOOD SURFACES

3.5.1 New Plywood and Wood Surfaces:

a. Wood surfaces shall be cleaned of foreign matter.

   Surface Cleaning: Surfaces shall be free from dust and other deleterious substances and in a condition approved by the Government prior to receiving paint or other finish. Do not use water to clean uncoated wood.

b. Moisture content of the wood shall not exceed 12 percent as measured by a moisture meter in accordance with ASTM D 4444, Method A, unless otherwise authorized.

c. Wood surfaces adjacent to surfaces to receive water-thinned paints shall be primed and/or touched up before applying water-thinned paints.

d. Cracks and Nailheads: Set and putty stop nailheads and putty cracks after the prime coat has dried.

e. Cosmetic Repair of Minor Defects:

   (1) Knots and Resinous Wood: Prior to application of coating, cover knots and stains with two or more coats of 1.3-kg-cut shellac varnish, plasticized with 0.14 liters of castor oil per liter. Prime before applying any putty over shellacked area.

   (2) Open Joints and Other Openings: Fill with whiting putty, linseed oil putty. Sand smooth after putty has dried.

   (3) Checking: Where checking of the wood is present, sand the surface, wipe and apply a coat of pigmented orange shellac. Allow to dry before paint is applied.

f. Prime Coat For New Exterior Surfaces: Prime coat trim before wood becomes dirty, warped, or weathered.

3.6 APPLICATION

3.6.1 Coating Application

Painting practices shall comply with laws enacted to insure compliance with International Building Code requirements and ASTM standards clean air standards. Apply coating materials in accordance with SSPC PA 1. SSPC PA 1 methods are applicable to all substrates, except as modified herein.

At the time of application, paint shall show no signs of deterioration. Uniform suspension of pigments shall be maintained during application.

Unless otherwise specified or recommended by the paint manufacturer, paint may be applied by brush, roller, or spray. Rollers for applying paints and enamels shall be of a type designed for the coating to be applied and the surface to be coated.

Paints, except water-thinned types, shall be applied only to surfaces that are completely free of moisture as determined by sight or touch.

Thoroughly work coating materials into joints, crevices, and open spaces. Special attention shall be given to insure that all edges, corners, crevices, welds, and rivets receive a film thickness equal to that of adjacent painted surfaces.

Each coat of paint shall be applied so dry film shall be of uniform thickness and free from runs, drops, ridges, waves, pinholes or other voids, laps, brush marks, and variations in color, texture, and finish. Hiding shall be complete.

Touch up damaged coatings before applying subsequent coats. Interior areas shall be broom clean and dust free before and during the application of coating material.

a. Drying Time: Allow time between coats, as recommended by the coating manufacturer, to permit thorough drying, but not to present topcoat adhesion problems. Provide each coat in specified condition to receive next coat.

b. Primers, and Intermediate Coats: Do not allow primers or intermediate coats to dry more than 30 days, or longer than recommended by manufacturer, before applying subsequent coats. Follow manufacturer's recommendations for surface preparation if primers or intermediate coats are allowed to dry longer than recommended by manufacturers of subsequent coatings. Each coat shall cover surface of preceding coat or surface completely, and there shall be a visually perceptible difference in shades of successive coats.

c. Finished Surfaces: Provide finished surfaces free from runs, drops, ridges, waves, laps, brush marks, and variations in colors.

3.6.2 Mixing and Thinning of Paints

Reduce paints to proper consistency by adding fresh paint, except when thinning is mandatory to suit surface, temperature, weather conditions, application methods, or for the type of paint being used. Obtain written permission from the Government to use thinners. The written permission shall include quantities and types of thinners to use.

When thinning is allowed, paints shall be thinned immediately prior to application with not more than 0.125 L of suitable thinner per liter. The use of thinner shall not relieve the Contractor from obtaining complete hiding, full film thickness, or required gloss. Thinning shall not cause the paint to exceed limits on volatile organic compounds. Paints of different manufacturers shall not be mixed.

3.6.3 Coating Systems

a. Systems by Substrates: Apply coatings that conform to the respective specifications listed in the following Tables:

Table

Division 3. Exterior Concrete Paint Table

Division 4. Exterior Concrete Masonry Units Paint Table
Division 5. Exterior Metal, Ferrous and Other Metals Paint Table
Division 6. Exterior Wood; Dressed Lumber, Paint Table
Division 6: Exterior Plastics Paint Table
Division 9: Exterior Cement Plaster Paint Table
Division 3. Interior Concrete Paint Table
Division 5. Interior Metal, Ferrous and Non-Ferrous Paint Table
Division 6. Interior Wood Paint Table
Division 9: Interior Plaster, Paint Table

b. Minimum Dry Film Thickness (DFT): Apply paints, primers, varnishes, enamels, undercoats, and other coatings to a minimum dry film thickness of 0.038 mm each coat unless specified otherwise in the Tables. Coating thickness where specified, refers to the minimum dry film thickness.

c. Coatings for Surfaces Not Specified Otherwise: Coat surfaces which have not been specified, the same as surfaces having similar conditions of exposure.

d. Existing Surfaces Damaged During Performance of the Work, Including New Patches In Existing Surfaces: Coat surfaces with the following:

(1) One coat of primer.

(2) One coat of undercoat or intermediate coat.

(3) One topcoat to match adjacent surfaces.

3.7 COATING SYSTEMS FOR METAL

Apply coatings of Tables in Division 5 for Exterior and Interior.

a. Apply specified ferrous metal primer on the same day that surface is cleaned, to surfaces that meet all specified surface preparation requirements at time of application.

b. Inaccessible Surfaces: Prior to erection, use one coat of specified primer on metal surfaces that will be inaccessible after erection.

c. Shop-primed Surfaces: Touch up exposed substrates and damaged coatings to protect from rusting prior to applying field primer.

e. Pipes and Tubing: The semitransparent film applied to some pipes and tubing at the mill is not to be considered a shop coat, but shall be overcoated with the specified ferrous-metal primer prior to application of finish coats.

f. Exposed Nails, Screws, Fasteners, and Miscellaneous Ferrous Surfaces. On surfaces to be coated with water thinned coatings, spot prime exposed nails and other ferrous metal with latex primer MPI 107.

3.8 COATING SYSTEMS FOR CONCRETE AND CEMENTITIOUS SUBSTRATES

Apply coatings of Tables in Divisions 3, 4, and 9 for Exterior and Interior.

3.9 COATING SYSTEMS FOR WOOD AND PLYWOOD

Apply coatings of Tables in Division 6 for Exterior and Interior. Prior to erection, apply two coats of specified primer to treat and prime wood and plywood surfaces which will be inaccessible after erection.

3.10 PIPING IDENTIFICATION

Piping Identification, Including Surfaces In Concealed Spaces: Provide in accordance with MIL-STD-101, ANSI A13.1. Place stenciling in clearly visible locations. On piping not covered by MIL-STD-101, ANSI A13.1, stencil approved names or code letters, in letters a minimum of 13 mm high for piping and a minimum of 50 mm high elsewhere. Stencil arrow-shaped markings on piping to indicate direction of flow using black stencil paint.

3.11 INSPECTION AND ACCEPTANCE

In addition to meeting previously specified requirements, demonstrate mobility of moving components, including swinging and sliding doors, cabinets, and windows with operable sash, for inspection by the Government. Perform this demonstration after appropriate curing and drying times of coatings have elapsed and prior to invoicing for final payment.

3.12 PAINT TABLES

All spreading rates are maximum values.

3.12.1 Exterior Paint Tables

All manufacturers specific product listed in following tables shall be bases of design.

DIVISION 3: EXTERIOR CONCRETE PAINT TABLE

A. New concrete; vertical surfaces, excluding tops of slabs:

1. Acrylic Emulsion:
   New; (Matte)
   Primer: SCIB SEALCOAT 101.
   Spreading (coverage) Rate: 10 to 16 square meters per liter per coat.

   Intermediate and Topcoat: Exterior waterborne, acrylic copolymer emulsion, matte. SCIB Acrycoat Matt 344.
   Spreading (coverage) Rate: 10 to 12 square meters per liter per coat.

2. Acrylic:
   Primer: Mastercure 101.
   Spreading (coverage) Rate: 5 square meters per liter per coat.
   Intermediate and Topcoat: Masterseal 300H.
   Spreading (coverage) Rate: 1 to 2 square meters per liter per coat.

DIVISION 4: EXTERIOR CONCRETE MASONRY UNITS PAINT TABLE

A. New concrete masonry on uncoated surface:

1. Latex:
   New; (Matte)
   Primer/Block filler: SCIB SEALCOAT 101.
   Spreading (coverage) Rate: 10 to 16 square meters per liter per coat.

DIVISION 4: EXTERIOR CONCRETE MASONRY UNITS PAINT TABLE

Intermediate: Exterior waterborne, acrylic copolymer emulsion, matte. SCIB Acrycoat Matt 344.
Spreading (coverage) Rate: 10 to 12 square meters per liter per coat.
Topcoat: Exterior waterborne, acrylic copolymer emulsion, matte. SCIB Acrycoat Matt 344.
Spreading (coverage) Rate: 10 to 12 square meters per liter per coat.

DIVISION 5: EXTERIOR METAL, FERROUS AND OTHER METALS PAINT TABLE

STEEL / FERROUS SURFACES

A. New Steel that has been blast-cleaned to SSPC SP 6:

1. Alkyd
New; (Gloss)
Primer: Alkyd metal primer: SCIB Rust Proof 111 or equal.
Spreading (coverage) Rate: 7 to 11 square leters per liter.
Intermediate and Topcoat: High gloss alkyd enamel. SCIB Scilac Gloss 425 or equal.
Spreading (coverage) 11 to 15 square meters per liter per coat.

2. Alkyd (Alternate)
New; (Gloss)
Primer: Alkyd metal primer: Betek Antirust for doors.
Spreading (coverage) Rate: 55 to 85 mL per square meter per coat.
Intermediate and Topcoat: High gloss alkyd enamel. Betek Synthetic Paint or equal.
Spreading (coverage) 50 to 65 mL per square meter per coat.

DIVISION 6: EXTERIOR WOOD; DRESSED LUMBER PAINT TABLE

A. New Dressed lumber, Wood and plywood, trim, not otherwise specified:

1. Alkyd (Gloss)
Primer: Aklyd primer. SCIB Wood Primer and Undercoat or wood filler to fill heavy imperfection in wood or equal.
Spreading (coverage) Rate: 13 to 16 square meters per liter
Intermediate and Topcoat: High gloss alkyd enamel. SCIB Scilac Gloss 425 or equal.
Spreading (coverage) Rate: 11 to 15 square meters per liter per coat.

2. Alkyd (Alternate)
New; (Gloss)
Primer: Alkyd metal primer: Betek Synthetic Primer.
Spreading (coverage) Rate: 55 to 85 mL per square meter per coat.
Intermediate and Topcoat: High gloss alkyd enamel. Betek Synthetic Paint or equal.
Spreading (coverage) 50 to 65 mL per square meter per coat.

DIVISION 6: EXTERIOR PLASTICS PAINT TABLE

A. New PVC:

1. Acrylic Emulsion (Flat)
Primer: Interior/Exterior high performance acrylic primer. SCIB SEALCOAT 101 or equal.
Spreading (coverage) Rate: 10 to 16 square meters per liter per coat.

DIVISION 6: EXTERIOR PLASTICS PAINT TABLE
Intermediate and Topcoat: Intermediate Exterior latex, flat. SCIB Acrycoat Matt 344 or equal.
Spreading (coverage) Rate: 10 to 12 square meters per liter per coat.

DIVISION 9: EXTERIOR CEMENT PLASTER PAINT TABLE

A. New exterior cement plaster:

1. Acrylic Emulsion
New; (Flat)
Primer, Intermediate, and Topcoat: Exterior waterborne, acrylic copolymer emulsion, matte.
Primer: Interior/exterior high performance acrylic copolymer primer. SCIB SEALCOAT 101 or equal.
Spreading (coverage) Rate: 10 to 16 square meters per liter per coat.
Intermediate and Topcoat: Exterior waterborne, acrylic copolymer emulsion, matte. SCIB Acrycoat Matt 344 or equal.
Spreading (coverage) Rate: 10 to 12 square meters per liter per coat.

2. Acrylic:
Primer: Mastercure 101.
Spreading (coverage) Rate: 5 square meters per liter per coat.
Intermediate and Topcoat: Masterseal 300H.
Spreading (coverage) Rate: 1 to 2 square meters per liter per coat.

3. Acrylic
Acrylic emulsion flat.
Primer: Alkyd metal primer: Betek Universal Primer.
Spreading (coverage) Rate: 100 mL per square meter per coat.
Intermediate and Topcoat: Acrylic emulsion, Betekril or equal.
Spreading (coverage) 100 to 135 mL per square meter per coat.

3.12.2 Interior Paint Tables

DIVISION 3: INTERIOR CONCRETE PAINT TABLE

A. New concrete surfaces: Epoxy as follows:

1. Epoxy Paint
New
Primer: Epoxy primer undercoat. Jotafloor Sealer, FOSROC Nitoprime 25 (for Nitoflor FC140).
Spreading (coverage) Rate: 25 square meters per pack (Nitoprime), 10 square meter/liters per Jotafloor.
Intermediate and Topcoat: Solvent based, Two component epoxy coating. FOSROC Nitoflor FC140, Amerilock 400C, Jotafloor Top coat, or equal.
Spreading (coverage) Rate: 35 to 40 square meters per pack per coat 10 square meters/L for Jotafloor.

2. Non Slip Epoxy Paint
New
Primer: Jotafloor solvent free primer
Spreading (coverage): 10 square meter/Liter
Aggregate: Jotafloor non slip aggregate (for jotun)
Spreading (coverage): 3 kg/square meter
Top coat: Jotafloor Coating or Amerlock 400 C NS (3 componants)

DIVISION 3: INTERIOR CONCRETE PAINT TABLE
Spreading (coverage): 3.3 meter square/liter (Jotafloor)

DIVISION 4: INTERIOR CONCRETE MASONRY UNITS PAINT TABLE

A. New concrete masonry on uncoated surface:

1. Epoxy Paint
New; (Semi-gloss)
Primer: Epoxy primer undercoat. FOSROC Nitoprime 25 (for Nitoflor FC140).
Spreading (coverage) Rate: 25 square meters per pack.
Intermediate and Topcoat: Solvent based, two component epoxy coating. FOSROC Nitoflor FC140, Amerilock 400C, or equal.
Spreading (coverage) Rate: 35 to 40 square meters per pack per coat.

DIVISION 5: INTERIOR METAL, FERROUS AND NON-FERROUS PAINT TABLE

INTERIOR STEEL / FERROUS SURFACES

A. Metal, Mechanical, Electrical, Surfaces adjacent to painted surfaces (Match surrounding finish), exposed copper piping, and miscellaneous metal items not otherwise specified except floors, hot metal surfaces, and new prefinished equipment:

1. Alkyd (Gloss)
Primer: Alkyd metal primer. SCIB Rust Proff 111 or equal.
Spreading (coverage) Rate: 7 to 11 square meters per liter.
Intermediate, and Topcoat: High gloss alkyd enamel. SCIB Scilac Gloss 425 or equal.
Spreading (coverage) Rate: 11 to 15 square meters per liter per coat.

2. Alkyd (Alternate)
New; (Gloss)
Primer: Alkyd metal primer: Betek antirust.
Spreading (coverage) Rate: 55 to 85 mL per square meter per coat.
Intermediate and Topcoat: High gloss alkyd enamel. Betek Synthetic Paint or equal.
Spreading (coverage) 50 to 65 mL per square meter per coat.

B. All exposed metal surfaces including, but not limited to lintels, louvers, doors and door frames found in Water Booster Pump Station Water Disinfection Room No 101 and Dry Storage Room Room No 103. (Process equipment and piping covered elsewhere).

1. Epoxy
Primer: 1 Coat :Sherwin Williams Kem Bond HS primer (low VOC) B50Z Series or equal.
Primer Shop Primed surfaces: Compatible zinc-rich primer as furnished for materials requiring touchup
Finish Coats: 1 coat Sherwin Williams “Tile-Clad” high-solids epoxy B62Z-100 Series or equal.
Spreading rate: per manufactures recommendation

DIVISION 6: INTERIOR WOOD PAINT TABLE

A. New Wood and plywood not otherwise specified:

DIVISION 6: INTERIOR WOOD PAINT TABLE

1. Alkyd (Gloss)
   Primer: Alkyd primer. SCIB Wood Primer and Undercoat or wood filler to fill heavy imperfection in wood or equal.
   Spreading (coverage) Rate: 13 to 16 square meters per liter.
   Intermediate and Topcoat: High gloss alkyd enamel. SCIB Scilac Gloss 425 or equal.
   Spreading (coverage) Rate: 11 to 15 square meters per liter per coat.

2. Alkyd (Alternate)
   New; (Gloss)
   Primer: Alkyd metal primer: Betek Synthetic Primer for doors.
   Spreading (coverage) Rate: 55 to 85 mL per square meter per coat.
   Intermediate and Topcoat: High gloss alkyd enamel. Betek Synthetic Paint or equal.
   Spreading (coverage) 50 to 65 mL per square meter per coat.

DIVISION 9: INTERIOR PLASTER AND DRYWALL PAINT TABLE

A. New Plaster not otherwise specified:

1. Acrylic Emulsion (Semigloss)
   Primer: Interior, waterborne, acrylic copolymer emulsion transparent primer. SCIB SEALCOAT 101 or equal.
   Spreading (coverage) Rate: 10 to 16 square meters per liter per coat.
   Intermediate and Topcoat: Interior waterborne semigloss 100% acrylic emulsion. SCIB Acrycoat Silk 366 or equal.
   Spreading (coverage) Rate: 6 to 9 sqaure meters per liter per coat.

2. Acrylic
   New; Semi Gloss
   Primer: Alkyd metal primer: Betek Universal Primer.
   Spreading (coverage) Rate: 100 mL per square meter per coat.
   Intermediate and Topcoat: High gloss alkyd enamel. Betek satin Paint or equal.
   Spreading (coverage) 55 mL per square meter per coat.

B. New Plaster and Gypsum board; ceilings:

1. Acrylic Emulsion (Matte)
   Primer: SCIB SEALCOAT 101 or equal.
   Spreading (coverage) Rate: 5 to 7 sqaure meters per liter per coat.
   Topcoat: SCIB ACRYCOAT matt 344 or equal.
   Spreading (coverage) Rate: 5 to 7 sqaure meters per liter per coat.

2. Acrylic
   New; Matt
   Primer: Alkyd metal primer: Betek Universal Primer for Plaster ceiling & Betek GYP primer
   Spreading (coverage) Rate: 100 mL per square meter per coat.
   Intermediate and Topcoat: High gloss alkyd enamel. Betek Ceiling Satin. or equal.
   Spreading (coverage) 65 mL per square meter per coat.

3. Acrylic
   New; Matt
   Primer: Alkyd metal primer: Betek Hygienic Primer.
   Spreading (coverage) Rate: 90 mL per square meter per coat.
   Intermediate and Topcoat: High gloss alkyd enamel. Betek Hygienic

DIVISION 9: INTERIOR PLASTER AND DRYWALL PAINT TABLE

Paint or equal.

Spreading (coverage) 55 mL per square meter per coat.

-- End of Section --

SECTION 10191

CUBICLE CURTAIN, TRACK AND HARDWARE

PART 1 GENERAL

1.1 REFERENCES

The publications listed below form a part of this specification to the extent referenced. The publications are referred to in the text by the basic designation only.

ALUMINUM ASSOCIATION (AA)

AA DAF-45	(1997) Designation System for Aluminum Finishes

ASTM INTERNATIONAL (ASTM)

ASTM B 221M	(2000) Aluminum and Aluminum-Alloy Extruded Bars, Rods, Wire, Profiles, and Tubes (Metric)
ASTM B 456	(1995) Electrodeposited Coatings of Copper Plus Nickel Plus Chromium and Nickel Plus Chromium

1.2 SUBMITTALS

Government approval is required for submittals with a "G" designation; submittals not having a "G" designation are for information only. When used, a designation following the "G" designation identifies the office that will review the submittal for the Government. The following shall be submitted in accordance with Section 01330 SUBMITTAL PROCEDURES:

SD-02 Shop Drawings

Cubicle track layout

SD-08 Manufacturer's Instructions

Cubicle track installation

1.3 DELIVERY AND STORAGE

Deliver tracks, curtains, and accessory items to site in unopened containers clearly labeled with manufacturer's name and contents. Store in safe, dry, and clean location. Do not open containers until contents are to be installed.

1.4 QUALITY CONTROL

Allow smooth, rapid, and complete travel with no gaps at corners or ends of track. The track of an individual room or cubicle shall have no joints. Form corner bends in a single continuous piece on a 300 mm radius to exactly 90 degrees. Other track lengths to 4800 mm shall have no joints.

PART 2 PRODUCTS

2.1 TRACK SYSTEM

Track shall be suspended or ceiling surface mounted. Bends shall be minimum 300 mm radius.

2.1.1 Extruded Aluminum Tracks

ASTM B 221M and ASTM B 456; alloy 6063-TS, channel shape 35-mm wide by 19-mm deep,, 1.25 mm minimum wall thickness. Inside raceway to be smooth for interior carriers and must be able to receive wheel carriers. Finish as designated for aluminum finishes in AA DAF-45.

2.1.2 End Stop and Pull-out

Fabricate from aluminum or nylon with an anodized finish matching the track finish.

2.1.3 Metal Finishes

Satin, clear anodized.

2.2 CARRIER UNIT

2.2.1 Curtain Carriers

Nylon axle and two-wheel carriers with nickel-plated, beaded, drop chain and hook. Furnish one carrier for each 150 mm of curtain width unless otherwise recommended by manufacturer.

2.3 CURTAIN

2.3.1 Curtain Fabric

2.3.1.1 Fiber Content

100 percent polyester, inherently and permanently flame-resistant.

2.3.1.2 Pattern and Color

Fabric color and pattern shall be selected from manufacturer's full range by Contracting Officer. Items where color, pattern, or fabric are be selected by Contracting Officer from manufacturer's full range shall have choices submitted to Contracting Officer simultaneously with other items requiring finish selection.

2.3.2 Mesh Top

12 mm, open nylon mesh.

2.3.3 Grommets

Two-piece, rolled-edge, rustproof, nickel-plated brass; spaced not more than 152 mm o.c.; machined into top hem.

2.4 FASTENERS

Stainless steel.

2.5 CURTAIN FABRICATION

Provide curtain fabrication as indicated below:

2.5.1 Width

Width shall be equal to track length from which curtain is hung plus 10 percent added fullness, but not less than 305 mm added fullness.

2.5.2 Length

Length shall be equal to floor-to-track height, minus 305 mm distance above finished floor.

2.5.3 Bottom Hem

Not less than 25.4 mm and not more than 38 mm wide, not less than double thickness and double stitched.

2.5.4 Side Hems

Not less than 12.7 mm and not more than 31.8 mm wide, with not less than double thickness edges, and lock stitched.

2.5.5 Vertical Hems

Not less than 12.7 mm wide, double turned and double stitched.

PART 3 EXECUTION

3.1 INSTALLATION

3.1.1 General

Verify dimensions prior to installation. Install track after painting and finishing operations are complete. Provide labor and all materials indicated, specified or necessary for a complete finished installation. Install track plumb, level and true, and securely anchored to the ceiling to form a neat, rigid installation. Remove damaged or defective components and replace with new components.

3.1.2 Installation Details

Install tracks ceiling surface mounted. Install tracks where indicated. Install end cap at each end of the track and pull-out at the end where curtains are stacked to permit insertion and removal of carrier units. Securely fasten end stops to prevent their being forced out by striking weight of carrier units.

-- End of Section --

SECTION 10201

METAL WALL AND DOOR LOUVERS

PART 1 GENERAL

1.1 REFERENCES

The publications listed below form a part of this specification to the extent referenced. The publications are referred to in the text by the basic designation only.

ASTM INTERNATIONAL (ASTM)

ASTM A 653/A 653M	(2001a) Steel Sheet, Zinc-Coated (Galvanized) or Zinc-Iron Alloy-Coated (Galvannealed) by the Hot-Dip Process

1.2 DELIVERY, STORAGE, AND PROTECTION

Deliver materials to the site in an undamaged condition. Carefully store materials off the ground to provide proper ventilation, drainage, and protection against dampness. Louvers shall be free from nicks, scratches, and blemishes. Replace defective or damaged materials with new.

PART 2 PRODUCTS

2.1 MATERIALS

2.1.1 Galvanized Steel Sheet

ASTM A 653/A 653M, coating designation Z275.

2.2 METAL WALL LOUVERS

Weather resistant type, with bird screens and made to withstand a wind load of not less than 1.2 kilopascals.

2.2.1 Formed Metal Louvers

Formed of aluminum sheet not less than 1.2 mm thick.

2.2.2 Mullions and Mullion Covers

Same material and finish as louvers. Provide mullions for all louvers more than 1500 mm in width at not more than 1500 mm on centers. Provide mullions covers on both faces of joints between louvers.

2.2.3 Screens and Frames

Provide screens as detailed below. Mount screens in removable, rewirable frames of same material and finish as the louvers.

2.2.3.1 Louver Screening for Louvers

Use the following for applications as indicated on Drawings.

a. Bird Screening: Galvanized steel or Aluminum; 12.0-mm square mesh.

b. Insect Screening: Aluminum, 1.4-by-1.6-mm mesh, 0.30-mm wire.

2.3 DOOR LOUVERS

Inverted "V" sightproof type not less than 25 mm thick with matching metal trim. Louvers for exterior doors shall be weather resistant type.

2.3.1 Formed Metal Door Louvers

Fabricate of 0.9 mm thick steel sheet or sheet aluminum not less than 1.25 mm thick. Trim shall be beveled "Z" molding both sides.

2.3.2 Screens and Frames

For exterior doors, provide aluminum insect screens, 1.4-by-1.6-mm mesh, 0.30-mm wire or 1.4-by-1.8-mm mesh, 0.30-mm wire. Mount screens in removable, rewirable frames of same material and finish as the louvers.

2.3.3 Louvers for Rated Openings

Basis of Design: For doors rated up to 1-1/2 hours, use Air Louvers Inc., Model 1900-A.

2.4 FASTENERS AND ACCESSORIES

Provide stainless steel screws and fasteners for aluminum louvers and zinc-coated screws and fasteners for steel louvers. Provide other accessories as required for complete and proper installation.

For galvanized security grilles for use at the Ammunition Storage Building louver applications, refer to Section 05500.

2.5 FINISHES

2.5.1 Steel

Provide factory-applied coating. Clean and phosphate treat exposed surfaces and apply rust-inhibitive primer and baked enamel finish coat, 0.025 mm minimum total dry film thickness, color as selected by Government.

PART 3 EXECUTION

3.1 INSTALLATION

3.1.1 Wall Louvers

Install using stops or moldings, flanges, strap anchors, or jamb fasteners as appropriate for the wall construction and in accordance with manufacturer's recommendations.

3.1.2 Door Louvers

Install louvers in wood doors by using metal "Z" or "L" moldings. Fasten moldings to door with screws.

3.1.3 Screens and Frames

Attach frames to louvers with screws or bolts.

3.2 PROTECTION FROM CONTACT OF DISSIMILAR MATERIALS

3.2.1 Copper or Copper-Bearing Alloys

Paint copper or copper-bearing alloys in contact with dissimilar metal with heavy-bodied bituminous paint or separate with inert membrane.

3.2.2 Aluminum

Where aluminum contacts metal other than zinc, paint the dissimilar metal with a primer and two coats of aluminum paint.

3.2.3 Metal

Paint metal in contact with mortar, concrete, or other masonry materials with alkali-resistant coatings such as heavy-bodied bituminous paint.

-- End of Section --

SECTION 10270

ACCESS FLOORING

PART 1 GENERAL

1.1 REFERENCES

The publications listed below form a part of this specification to the extent referenced. The publications are referred to within the text by the basic designation only.

ASTM INTERNATIONAL (ASTM)

ASTM E 84	(2004) Surface Burning Characteristics of Building Materials
ASTM F 1066	(1999) Vinyl Composition Floor Tile

CEILINGS & INTERIOR SYSTEMS CONSTRUCTION ASSOCIATION (CISCA)

CISCA Access Floors	(1987) Test Procedures for Access Floors

NATIONAL FIRE PROTECTION ASSOCIATION (NFPA)

NFPA 99	(1999) Health Care Facilities

1.2 SUBMITTALS

Government approval is required for submittals with a "G" designation; submittals not having a "G" designation are for information only. When used, a designation following the "G" designation identifies the office that will review the submittal for the Government. The following shall be submitted in accordance with Section 01330 SUBMITTAL PROCEDURES:

SD-02 Shop Drawings

Detail Drawings; G AED

Drawings showing details at floor perimeter, method of grounding, description of shop coating, installation height above structural floor, and other details as specified.

SD-03 Product Data

Access Flooring System

Manufacturer's descriptive data, catalog cuts, and installation instructions. The data shall include information about any design and production techniques, procedures and policies used to conserve energy, reduce material, improve waste management or incorporate green building/recycled products into the manufacturer of their components or products. Cleaning and maintenance instructions shall be included.

SD-04 Samples

Floor Panels
Panel Support System

One sample of each panel type and suspension system proposed for use.

SD-05 Design Data

Seismic Calculations

Design calculations which demonstrate that the proposed floor system meets requirements for seismic loading. Certified copies of test reports may be submitted in lieu of calculations.

SD-06 Test Reports

Factory Tests
Electrical Resistance
Field Tests

Certified copies of test reports from an approved testing laboratory, attesting that the proposed floor system components meet the performance requirements specified.

SD-07 Certificates

Access Flooring System

Certificate of compliance attesting that the access floor system meets specification requirements.

1.3 SYSTEM DESCRIPTION

Access flooring shall be installed at the location and elevation and in the arrangement shown on the drawings. The floor system shall be of the stringer type, complete with all supplemental items, and shall be the standard product of a manufacturer specializing in the manufacture of access flooring systems. Provide for self-alignment of floor panels, adjustable pedestals and readily removable floor panels covered as specified. Lateral stability of floor system shall be independent of panels. Finished assembly shall be rigid and free of vibration, noises, and rocking panels. Provide bolted stringer system for equipotential plane grounding.

1.3.1 Allowable Tolerances

a. Floor Panel Flatness: Plus or minus 0.5 mm on diagonal on top of panel or underneath edge.

b. Floor Panel Length: Plus or minus 0.4 mm .

c. Floor Panel Squareness: Plus or minus 0.5 mm in panel length.

d. Finish Floor: Level within plus or minus 1.6 mm in 2 meters , and plus or minus 2.5 mm for entire floor.

1.3.2 Floor Panels

Floor panel testing shall be conducted in accordance with CISCA Access Floors. When tested as specified, all deflection and deformation measurements shall be made at the point of load application on the top surface of the panel. Floor panels shall be capable of supporting the following loads:

a. Concentrated load of 4450 N on 645 square mm, at any point on panel, without deflecting more than 2 mm, with a safety factor of 2 based on static design load, without permanent deformation in excess of 0.25mm in any of the specified tests.

b. Uniform live load of 14.36 kN/square meter , without deflecting more than 1 mm .

c. A rolling load of 2670 N applied through a 75 mm diameter by 30 mm wide caster for 10 cycles over the same path, without deflecting more than 1 mm and without permanent deformation in excess of 0.5 mm .

d. An impact load of 68 kg on 645 square mm from a height of 300 mm with permanent set not to exceed 1.5 mm .

1.3.3 Stringers

Stringers shall be capable of supporting a 560 kg concentrated load at midspan without permanent deformation in excess of 0.25 mm .

1.3.4 Pedestals

Pedestals shall be capable of supporting a 2270 kg axial load without permanent deformation.

1.3.5 Pedestal Adhesive

Adhesive shall be capable of securing a pedestal in place with sufficient bonding strength to resist an overturning force of 113 Nm .

1.3.6 Bond Strength of Factory Installed Covering

Bond strength of floor covering shall be sufficient to permit handling of the panels by use of the panel lifting device, and to withstand moving caster loads up to 4.45 kN , without separation of the covering from the panel.

1.3.7 Grounding

The access flooring system shall be grounded for safety hazard and static suppression. Provide positive contact between components for safe, continuous electrical grounding of entire floor system. Total system resistance from wearing surface of floor to building grounding electrode shall be within range of 0.2 to 2.0 megohms.

1.3.7.1 Joint Resistance

Electrical joint resistance between individual stringer and pedestal junctions shall be less than 0.1 milliohms. Electrical resistance between stringers and floor panels as mounted in normal use shall be less than 3 ohms.

1.4 DELIVERY, STORAGE, AND HANDLING

1.4.1 Delivery

Deliver materials to site in undamaged condition, in original containers or packages, complete with accessories and instructions. Label packages with manufacturer's name and brand designations. Where materials are covered by referenced specification, containers or packages shall also bear specification number, type, and class as applicable.

1.4.2 Storage

Materials shall be stored in original protective packaging in a safe, dry, and clean location.

1.4.3 Handling

Materials shall be handled and protected in a manner to prevent damage during the entire construction period.

PART 2 PRODUCTS

2.1 FLOOR PANELS

2.1.1 Panel Construction

Base access floor system on a 600 by 600 mm square module providing minimum of 380 mm clearance between structural floor and top of finished floor. Fabricate so accurate job cutting and fitting may be done using standard sizes for perimeters and around columns. Do not expose metal on finished top surface of panels. Provide cutouts and cutout closures to accommodate utility systems and equipment intercabling. Reinforce cutouts to meet design load requirements. Provide extra support pedestals at each corner of cutout for cutout panels that do not meet specified design load requirements. Use panels of uniform dimensions within specified tolerances. Panels shall be permanently marked to indicate model number.

2.1.1.1 Metal-Clad Cementitious Fill (Composite Panels)

Composite panels shall be of die-formed steel construction totally enclosing the panel, including the top surface. The void spaces between the top sheet and the formed steel bottom sheet shall be completely filled with an incombustible cementitious or concrete material. Seal cut edges in accordance with manufacturer's recommendations. Gravity held panels with bolted stringer understructure: Fasten end of each stringer and mid-point of each 1212 mm stringer positively to pedestal heads, using manufacturer's standard screws. Provide screws that are removable from top.

2.1.1.2 Metal-Clad Wood Core

Wood core panels shall have cores of wood particleboard or of plywood. The core shall be not less than 25 mm thick, and shall be faced on both sides with structurally bonded zinc-coated steel sheets not lighter than 0.70 mm . All edges and corners shall be sealed with zinc-coated steel or extruded aluminum. The completed panels shall have a flame spread rating of 25 or less when tested in accordance with ASTM E 84. Provide zinc-coated steel, extruded aluminum, fire resistant vinyl, or other fire resistant edging to protect shop and field edge cuts and cutouts through the face of panels in

a manner to meet specified flame spread requirements.

2.1.2 Floor Covering

Floor panels shall be surfaced with materials firmly bonded in place with waterproof adhesive. The electrical resistance shall remain stable over the life expectancy of the floor covering. Any antistatic agent used in the manufacturing process shall be an integral part of the material, and shall not be surface applied. Bolt heads or similar attachments shall not rise above the traffic surface.

2.1.2.1 Vinyl Composition Tile

Vinyl composition tile surfacing shall be 3 mm thick conforming to ASTM F 1066, Type IV, Composition 1 or 2. Tiles may be approximately 300 mm square or may be the full size of the panel.

2.1.3 Accessories

Registers, grilles, perforated panels, and plenum dividers shall be provided where indicated, and shall be the manufacturer's standard type. Registers, grilles, and perforated panels shall be designed to support the same static loads as floor panels without structural failure, and shall be capable of delivering the air volumes indicated. Registers and perforated panels shall be 25 percent open area and shall be equipped with adjustable dampers.

2.1.4 Lifting Device

Each individual room shall be provided with one floor panel lifting device standard with the floor manufacturer. A minimum of two devices shall be furnished.

2.2 PANEL SUPPORT SYSTEM

Design support system to allow for 360 degree clearance in laying out cable and cutouts for service to machines and so that panel and stringer together take up maximum of 50 mm .

2.2.1 Pedestals

Pedestals shall be of steel or aluminum or a combination thereof. Ferrous materials shall have a factory-applied corrosion-resistant finish. Pedestal shafts shall be threaded to permit height adjustment within a range of approximately 50 mm , to permit overall floor adjustment within plus or minus 2.5 mm of the required elevation, and to permit leveling of the finished floor surface within 1.56 mm in 3000 mm in all directions. Locking devices shall be provided to positively lock the final pedestal vertical adjustments in place. Pedestal caps shall interlock with stringers to preclude tilting or rocking of the panels.

2.2.2 Stringers

Stringers shall be of steel or extruded aluminum, and shall interlock with the pedestal heads to prevent lateral movement. Provide stringers that can be added or removed after floor is in place.

2.3 COLOR

Color shall be as selected by Contracting Officer.

PART 3 EXECUTION

3.1 INSTALLATION

The floor system shall be installed in accordance with the manufacturer's instructions and with the approved detail drawings. Open ends of the floor, where the floor system does not abut wall or other construction, shall have positive anchorage and rigid support.

3.1.1 Preparation for Installation

The area in which the floor system is to be installed shall be cleared of all debris. Structural floor surfaces shall be thoroughly cleaned and all dust shall be removed. Floor coatings required for dust, water, or vapor control shall be installed prior to installation of pedestals only if the pedestal adhesive will not damage the coating. If the coating/ waterproofing and adhesive are not compatible, the coating/waterproofing shall be applied after the pedestals have been installed and the adhesive has cured.

3.1.2 Pedestals

Pedestals shall be accurately spaced, and shall be set plumb and in true alignment. Base plates shall be in full and firm contact with the structural floor, and shall be secured to the structural floor.

3.1.3 Stringers

Stringers shall be interlocked with the pedestal caps to preclude lateral movement, and shall be spaced uniformly in parallel lines at the indicated elevation.

3.1.4 Auxiliary Framing

Auxiliary framing or pedestals shall be provided around columns and other permanent construction, at sides of ramps, at open ends of the floor, and beneath panels that are substantially cut to accommodate utility systems. Special framing for additional lateral support shall be as shown on the approved detail drawings. Provide additional pedestals and stringers designed to specific heights and lengths to meet structural irregularities and design loads. Connect auxiliary framing to main framing.

3.1.5 Panels

The panels shall be interlocked with supports in a manner that will preclude lateral movement. Perimeter panels, cutout panels, and panels adjoining columns must be fastened to the supporting components to form a rigid boundary for the interior panels. Floors shall be level within the specified tolerances. Cut edges of steel and wood-core panels shall be painted as recommended by the panel manufacturer. Cut edges of composite panels shall be coated with a silicone rubber sealant or with an adhesive recommended by the panel manufacturer. Extruded vinyl edging shall be secured in place at all cut edges of all panel cut-outs to prevent abrasion of cables. Where the space below the floor is a plenum, cutouts for conduit and similar penetrations shall be closed using self-extinguishing

sponge rubber.

3.1.6 Repair of Zinc Coating

Zinc coating that has been damaged, and cut edges of zinc-coated components and accessories, shall be repaired by the application of a galvanizing repair paint. Areas to be repaired shall be thoroughly cleaned prior to application of the paint.

3.2 FIELD TESTS

3.2.1 Electrical Resistance

Testing of electrical resistance in the completed installation shall be conducted in the presence of the Contracting Officer. Testing shall be in accordance with NFPA 99 modified by placing one electrode on the center of the panel surface and connecting the other electrode to the metal flooring support. Measurements shall be made at five or more locations. Each measurement shall be the average of five readings of 15 seconds duration at each location. During the tests, relative humidity shall be 45 to 55 percent and temperature shall be 21 to 24 degrees C . The panels used in the testing will be selected at random and will include two panels most distant from the ground connection. Electrical resistance shall be measured with instruments that are accurate within 2 percent and that have been calibrated within 60 days prior to the performance of the resistance tests. The metal-to-metal resistance from panel to supporting pedestal shall not exceed 10 ohms. The resistance between the wearing surface of the floor covering and the ground connection, as measured on the completed installation, shall be in accordance with paragraph FLOOR COVERING.

3.3 CLEANING AND PROTECTION

3.3.1 Cleaning

The space below the completed floor shall be free of all debris. Before any traffic or other work on the completed raised floor is started, the completed floor shall be cleaned in accordance with the floor covering manufacturer's instructions.

3.3.2 Protection

Traffic areas of raised floor systems shall be protected with a covering of building paper, fiberboard, or other suitable material to prevent damage to the surface. Cutouts shall be covered with material of sufficient strength to support the loads to be encountered. Plywood or similar material shall be placed on the floor to serve as runways for installation of heavy equipment not in excess of design load capacity. Protection shall be maintained until the raised floor system is accepted.

-- End of Section --

SECTION 10800

TOILET ACCESSORIES

PART 1 GENERAL

1.1 SUBMITTALS

Government approval is required for submittals with a "G" designation; submittals not having a "G" designation are for information only. When used, a designation following the "G" designation identifies the office that will review the submittal for the Government. Submit the following in accordance with Section 01330 SUBMITTAL PROCEDURES:

SD-03 Product Data

Finishes; G AED
Accessory Items; G AED

Manufacturer's descriptive data and catalog cuts indicating materials of construction, fasteners proposed for use for each type of wall construction, mounting instructions, operation instructions, and cleaning instructions.

SD-04 Samples

Finishes; G AED
Accessory Items; G AED

One sample of each accessory proposed for use. Incorporate approved samples into the finished work, provided they are identified and their locations noted.

SD-07 Certificates

Accessory Items

Certificate for each type of accessory specified, attesting that the items meet the specified requirements.

1.2 DELIVERY, STORAGE, AND HANDLING

Toilet accessories shall be wrapped for shipment and storage, delivered to the jobsite in manufacturer's original packaging, and stored in a clean, dry area protected from construction damage and vandalism.

1.3 WARRANTY

Manufacturer's standard performance guarantees or warranties that extend beyond a 1 year period shall be provided.

PART 2 PRODUCTS

2.1 MANUFACTURED UNITS

Toilet accessories shall be provided where indicated on the Drawings. Each

accessory item shall be complete and shall be of sturdy construction with corrosion resistant surface.

2.1.1 Anchors and Fasteners

Anchors and fasteners shall be capable of developing a restraining force commensurate with the strength of the accessory to be mounted and shall be suited for use with the supporting construction. Exposed fasteners shall be finished to match the accessory.

2.1.2 Finishes

Except where noted otherwise, finishes on metal shall be satin finish.

2.2 ACCESSORY ITEMS

Accessory items shall conform to the requirements specified below.

2.2.1 Stainless Steel Toilet Tissue Dispenser (SSTTD)

Toilet tissue holder shall be stainless steel, surface mounted with one or two rolls of standard tissue mounted horizontally. Cabinet shall be stainless steel, satin finish.

2.2.2 Coat Hook

Coat Hook shall have a pin integral or permanently fastened to wall flange. Maximum projection shall be 100 mm. Finish shall be satin finish.

PART 3 EXECUTION

3.1 INSTALLATION

Surfaces of fastening devices exposed after installation shall have the same finish as the attached accessory. Install accessories at the location and height indicated. Protect exposed surfaces of accessories with strippable plastic or by other means until the installation is accepted. After acceptance of accessories, remove and dispose of strippable plastic protection. Coordinate accessory manufacturer's mounting details with other trades as their work progresses. After installation, thoroughly clean exposed surfaces and restore damaged work to its original condition or replace with new work.

3.1.1 Recessed Accessories

Fasten accessories to backing construction. Set anchors in mortar in masonry construction.

3.1.2 Surface Mounted Accessories

Mount on concealed backplates, unless specified otherwise. Accessories without backplates shall have concealed fasteners. Unless indicated or specified otherwise, install accessories with sheet metal screws or wood screws in lead-lined braided jute, teflon or neoprene sleeves, or lead expansion shields, or with toggle bolts or other approved fasteners as required by the construction. Install backplates in the same manner, or provide with lugs or anchors set in mortar, as required by the construction.

3.2 CLEANING

Material shall be cleaned in accordance with manufacturer's recommendations. Alkaline or abrasive agents shall not be used. Precautions shall be taken to avoid scratching or marring of surfaces.

-- End of Section --

SECTION 11025

FORCED ENTRY RESISTANT COMPONENTS

PART 1 GENERAL

1.1 REFERENCES

The publications listed below form a part of this specification to the extent referenced. The publications are referred to within the text by the basic designation only.

ALUMINUM ASSOCIATION (AA)

AA DAF-45	(2003) Designation System for Aluminum Finishes

AMERICAN WELDING SOCIETY (AWS)

AWS D1.1/D1.1M	(2006) Structural Welding Code - Steel

ASTM INTERNATIONAL (ASTM)

ASTM A 123/A 123M	(2002) Zinc (Hot-Dip Galvanized) Coatings on Iron and Steel Products
ASTM A 653/A 653M	(2004a) Steel Sheet, Zinc-Coated (Galvanized) or Zinc-Iron Alloy-Coated (Galvannealed) by the Hot-Dip Process
ASTM C 1036	(2001) Flat Glass
ASTM D 4802	(2002) Poly(Methyl Methacrylate) Acrylic Plastic Sheet
ASTM D 542	(2000) Index of Refraction of Transparent Organic Plastics
ASTM D 5420	(2004) Impact Resistance of Flat, Rigid Plastic Specimen by Means of a Strike Impacted by a Falling Weight (Gardner Impact)
ASTM E 1300	(2004e1) Determining Load Resistance of Glass in Buildings

BUILDERS HARDWARE MANUFACTURERS ASSOCIATION (BHMA)

BHMA A115.1	(1990) Preparation of 1-3/8" and 1-3/4" Standard Steel Doors and Steel Frames for Series 1000 Mortise Locks and Latches
BHMA A156.1	(2000) Butts and Hinges
BHMA A156.13	(2002) Mortise Locks & Latches, Series 1000

BHMA A156.16	(2002) Auxiliary Hardware
BHMA A156.18	(2000) Materials and Finishes
BHMA A156.4	(2000) Door Controls - Closers

GLASS ASSOCIATION OF NORTH AMERICA (GANA)

GANA Glazing Manual	(2004) Glazing Manual

NATIONAL ASSOCIATION OF ARCHITECTURAL METAL MANUFACTURERS (NAAMM)

NAAMM HMMA 801	(2005) Glossary of Terms for Hollow Metal Doors and Frames
NAAMM HMMA 802	(1992) Manufacturing of Hollow Metal Doors and Frames
NAAMM HMMA 810	(1987) Hollow Metal Doors
NAAMM HMMA 820	(1987) Hollow Metal Frames

UNDERWRITERS LABORATORIES (UL)

UL 10B	(1997; Rev thru Oct 2001) Fire Tests of Door Assemblies

1.2 COMPONENT DESCRIPTION

Components covered in this specification are designed to resist forced entry attacks with increasing severity levels of hand, power, and thermal tools and weapons and explosives. The components include forced entry resistant personnel door/frame assembliesglazing for doors. Each type of forced entry resistant component shall be a complete assembly produced by a single manufacturer. Movable and operable components shall operate smoothly and freely. Items for exterior installation shall be designed to resist water and vapor penetration or entrapment.

1.3 SUBMITTALS

Government approval is required for submittals with a "G" designation; submittals not having a "G" designation are for information only. When used, a designation following the "G" designation identifies the office that will review the submittal for the Government. The following shall be submitted in accordance with Section 01330 SUBMITTAL PROCEDURES:

SD-02 Shop Drawings

Installation

Drawings showing anchorage of components and appurtenances into the actual surrounding construction and clearances for operation. Drawings sufficient to show hardware location and installation details. Complete drawings for forced entry resistant prefabricated guardhouses.

SD-03 Product Data

Forced Entry Resistant Components

Manufacturer's descriptive data and finish samples. The forced entry resistant door lock functions, for selection by the Contracting Officer. Airflow calculations for louvers.

Installation

A copy of installation instructions and recommended cleaning and maintenance instructions.

Components

Lists including schedule of components to be incorporated in the work with manufacturer's model or catalog numbers, specification and drawing reference numbers, warranty information, threat level designated, fire ratings, sound transmission coefficient ratings, insulation "U" value, and number of items provided. Listing of similar products that have been satisfactorily in use for two years or more, including name of purchasers, locations of installations, dates of installations, and service organizations.

SD-07 Certificates

Forced Entry Resistant Components

Manufacturer's certificates attesting that components conform to the requirements on drawings and in specifications. Testing reports from independent testing laboratories indicating conformance to regulatory requirements shall be included. Fire rated doors may be furnished with certificate in lieu of a label. Certificate shall indicate compliance with the requirements for doors of the type and fire rating class. Manufacturer shall certify that compliance with the installation instructions and/or drawings will provide the specified degree of forced entry resistance.

1.4 STANDARD PRODUCTS

Each type of forced entry resistant component shall be the standard product of a manufacturer regularly engaged in the manufacture of such products and shall duplicate items that have been tested and approved in accordance with the forced entry test standard specified in paragraph COMPONENT TEST REQUIREMENTS. Manufacturer's descriptive data, installation instructions, and certificate and test report showing compliance with the specified forced entry test standard as specified in paragraph COMPONENT TEST REQUIREMENTS shall be submitted for all components. Following approval of manufacturer's descriptive data, a schedule listing the items and components to be furnished shall be submitted. Manufacturer's certificate shall be submitted indicating that compliance with the installation instructions [and drawings] will provide the specified degree of forced entry resistance.

1.5 QUALIFICATIONS

Welding procedures, welders, and welding operators shall be qualified in accordance with AWS D1.1/D1.1M.

1.6 DELIVERY, STORAGE, AND HANDLING

Components shall be delivered to the job site with the manufacturer, name, and model number clearly marked thereon. Components shall be delivered, stored, and handled so as not to be damaged or deformed and shall be in accordance with ASTM D 3951. Components shall be handled carefully to prevent damage to the faces, edges, corners, ends, and glazing where applicable. Abraded, scarred, or rusty areas shall be cleaned, repaired, or replaced immediately upon detection of the damage. Damaged components that cannot be restored shall be replaced. Components and equipment shall be stored in a dry location on platforms or pallets that are ventilated adequately, free of dust, water, and other contaminants, and stored in a manner which permits easy access for inspection and handling.

1.7 SEQUENCING AND SCHEDULING

When testing of a previously untested component is specified, sufficient lead time shall be allowed so that testing will not delay construction. The test results and component shall be approved by the Contracting Officer before delivery of the component to the job site.

1.8 WARRANTY

Manufacturer's warranty for _10____ years shall be furnished for glazing materials. Warranty shall provide for replacement and installation of glazing if delamination, discoloration, or cracking or crazing occurs.

PART 2 PRODUCTS

2.1 FORCED ENTRY RESISTANT PERSONNEL DOOR AND FRAME ASSEMBLIES

Doors and frames shall be factory fabricated assemblies. Sizes shall be as indicated. Doors shall be of steel, hardened steel, or be reinforced internally with steel shapes and clad with aluminum. Interior composition and reinforcement shall be determined by the manufacturer. Rubber silencers shall be installed on door frames. Exterior doors shall have top edges closed flush and sealed against water penetration, be insulated, and shall be provided with weatherstripping and thresholds. Locks and hinges shall be the same or equal in performance and number as the hardware used on the tested door. Lock and hardware shall be provided by the manufacturer as a complete assembly. Frames shall be furnished by the door fabricator, with anchorage to wall construction completely specified as to number of anchors, anchor size, material, and length.

2.1.1 Fire Rated Doors

Fire rated doors shall be provided at locations indicated. Door assemblies shall comply with the forced entry test standard specified and shall bear the listing identification label of the Underwriters' Laboratories, Inc. or a nationally recognized testing laboratory that is qualified to perform tests of fire door assemblies in accordance with UL 10B, and that has a listing service for the tested assemblies. Door assemblies include door, hardware, frame, closers, and glazing. A certificate indicating that the units were inspected in accordance with NFPA 80 and NFPA 80Amay be furnished in lieu of label. For oversized doors, a certificate from Underwriters' Laboratories, Inc. or a nationally recognized testing laboratory may be furnished in lieu of label. The certificate shall state that oversized doors are manufactured in compliance with the requirements

for doors of the type and fire rating class. Manufacturer's descriptive data shall be submitted.

2.1.2 [Enter Appropriate Subpart Title Here]

2.1.3 Door and Frame Fabrication

The subsurfaces shall be flat, parallel, and plumb after fabrication. Doors shall be reinforced and fully insulated in accordance with manufacturer's design. Door frames shall be anchored as specified by the door manufacturer. The Contractor shall coordinate the door manufacturer's requirements for welding to wall reinforcement or casting frame embedments into wall before wall is placed. Steel door frames shall be mitered or coped and welded at the corners with welds ground smooth. Where structural channel frames are used the size, weight, stops, welding, and anchorage into surrounding construction must be specified and tested along with the door as an assembly. Any necessary reinforcements in the door and the frame shall be made in the factory. Door and frame shall be drilled and tapped as required for the specified hardware. Frame channels shall be mitered or coped and welded at corners with full penetration groove welds. Exposed welds shall be dressed smooth. Hollow metal doors and frames shall be manufactured in accordance with NAAMM HMMA 801, NAAMM HMMA 802, NAAMM HMMA 810, and NAAMM HMMA 820 as a standard of quality, and shall meet the specified forced entry testing standard.

2.1.4 Sidelight Frames and Door Glazing

Sidelight frames shall be constructed using forced entry resistant door frame sections. For glazing in door or sidelight, stop height and rabbet depth shall be as required to accommodate the glazing material that is resistant to the forced entry test standard specified. The assembly shall be tested with the specified glazing and stops installed. Exterior glazing stops shall be welded or integral to the frame. Interior protected side glazing stops shall be removable stops attached with high-strength alloy steel machine screws with tamper-resistant heads or as required by the manufacturer. Glazing is specified in paragraph Forced Entry Resistant Glazing Materials.

2.1.5 Preparation for Hardware

Doors and frames shall be prepared for hardware in accordance with manufacturer's instructions. Surface applied hardware shall be drilled and tapped in the field.

2.1.6 Hardware

Hardware for forced entry resistant door assemblies shall be provided by the door assembly manufacturer to ensure a complete forced entry resistant assembly. Where test standard requires hardware to be tested with the door assembly, locks and hinges shall be included in the labeling and/or test certification. Locks and hinges shall be the same or equal in performance, quality, grade, and quantity as used on the successfully tested door assembly in accordance with the specified forced entry testing standard. The Contractor shall provide certification that the locks, latches, and hinges provide the same degree of forced entry resistance as required by the specified forced entry testing standard. Keying shall be as specified in Section 08710 DOOR HARDWARE.

2.1.6.1 Locks and Latchsets

The door manufacturer shall submit available lock functions for selection of function by the Contracting Officer. Mortise lock and latchsets shall be, as a minimum, series 1000, operational Grade 1, Security Grade 1 or 1A, and shall conform to BHMA A156.13. Strikes for mortise locks and latches (including deadbolt locks), as a minimum, shall conform to BHMA A115.1 except strikes shall be rectangular without curved lip. Mortise-type locks and latches for doors 45 mm thick and over shall have adjustable bevel fronts or otherwise conform to the shape of the door. Mortise locks shall have armored fronts. Mortise locks and latches shall have full escutcheon, through-bolted, extruded stainless steel trim. Lock finish shall be 630 in accordance with BHMA A156.18.

2.1.6.2 Hinges

Steel doors and frames required to resist the "very low" or "low" threat severity level that are up to and including 2.13 m high shall, as a minimum, be equipped with three Grade 1 hinges in accordance with BHMA A156.1, minimum size 125 mm high, heavy, double, or triple weight as required for weight of door. For each additional 300 mm of door height beyond 2.13 m, provide a minimum of one more hinge. Hinges shall be full mortise, half mortise, full surface, or half surface design as recommended by the manufacturer for frame and door design and shall be tamperproof unless mounted on the protected side of the door. Hinges shall have security pins . Spot welding of hinge pin will not be acceptable. The Contractor shall provide hinge manufacturer's certification that the hinge supplied meets applicable test requirements for BHMA A156.1 type number of hinge specified and that the hinge is suitable for the size and weight of the door assembly on which it will be utilized. Continuous extra heavy-duty piano-type hinge sized to carry the weight of the door without sagging is permitted. If continuous piano-type hinges are provided with the door, independent laboratory reports covering both the door weight capacity and a 2,500,000 cycle testing to match the BHMA A156.1 Grade 1 requirements shall be furnished by the Contractor. Interior door hinges shall be furnished in prime coated steel. Exterior door hinges shall be furnished in nonferrous metal or stainless steel.

2.1.6.3 Door Closers

Closers shall be extra heavy duty of size and type recommended by the manufacturer and shall be Grade 1 conforming to BHMA A156.4. Door closer finish shall be 600] in accordance with BHMA A156.18.

2.1.6.4 Door Stops and Holders

Door stops and holdersshall be extra heavy duty, conforming to BHMA A156.16, Type L11251 for floor mounted installation or BHMA A156.16, Type L11271 for wall mounted installation.

2.1.7 Frame Anchors

Jamb and head anchors shall be provided with door/frame assembly and shall be as specified by the manufacturer and forced entry resistant to the same degree as the component. Contractor shall coordinate concrete work with component manufacturers when the manufacturer specifies frame anchors to be embedded into a concrete or concrete masonry unit surface during construction.

2.1.8 Weatherstripping

Head and jambs of exterior doors shall be provided with compression-type neoprene bulb or closed-cell neoprene adjustable type weatherstripping. Door stops shall be weatherstripped with a surface-mounted sponge neoprene strip in bronze housing not less than 1.78 mm thick installed to make contact with the door. Weatherstripping shall be installed in conformance with the manufacturer's directions after completion of finish painting.

2.1.9 [Enter Appropriate Subpart Title Here]

2.2 [Enter Appropriate Subpart Title Here]

2.3 FORCED ENTRY RESISTANT WINDOW ASSEMBLIES

Forced entry resistant window assemblies shall be constructed using forced entry resistant frame sections. Frames shall be welded units of sizes and shapes indicated with minimum frame face dimensions of 50 mm. Frame anchorage shall be as specified by the manufacturer and forced entry resistant to the same degree as the component. Top height and rabbet depth shall be as required to accommodate the glazing material resistant to the forced entry test standard specified. Exterior glazing stops shall be welded to or integral to the frame. Interior protected side glazing stops shall be removable stops attached with high-strength alloy steel machine screws with tamper-resistant heads, or as required by the manufacturer.

2.3.1 Deal Trays

Deal tray shall provide nominal 325 mm wide by 40 mm high opening in sill of window frame. Deal tray shall be of the same materials and finish, shall be a welded subassembly of the window assembly, and shall conform to specified forced entry requirements for the entire window assembly.

2.3.2 Forced Entry Resistant Glazing Material

Glazing material shall be plastic, orcomposite and shall conform to applicable requirements ASTM C 1036, ASTM E 1300, and ASTM C 1048. Glazing materials shall be tested in accordance with the applicable sections of the following test procedures: ASTM D 905, ASTM D 1003, ASTM F 428, ASTM F 548, ASTM D 4093, and ASTM F 520. Plastic glazing shall be acrylic plastic sheets, polycarbonate plastic sheets, or approved equal. Plastic glazing shall be smooth and clear on both sides. Glazing material shall be factory installed. Factory-glazed components shall be covered to protect them from damage during adjacent finish work.

2.3.2.1 Laminated Glass

Laminated glass shall be all glass laminated construction conforming to applicable sections of ASTM C 1172. The adhesive interlayer material for bonding glass to glass shall be chemically compatible with surfaces which are to be bonded. Materials selected for lamination purposes shall be tested in accordance with the following testing procedures: ASTM D 905, ASTM D 1044, ASTM F 735, ASTM D 4093, ASTM F 521, ASTM F 520, and ASTM D 1003. Glass plies used in the lamination shall be annealed float glass conforming to Type I, quality q3, Class 1, ASTM C 1036.

2.3.2.2 Acrylic Plastic Sheets

Acrylic plastic glazing sheets shall be for use "as cast" and in stretching

operations with improved moisture absorption resistance conforming to ASTM D 4802. Acrylic materials shall be tested in accordance with the applicable sections of the following testing procedures: ASTM D 256, ASTM D 5420, ASTM D 542, ASTM D 570, ASTM D 635, ASTM D 648, ASTM D 638, ASTM D 696, ASTM D 792, ASTM D 1003, ASTM E 831, ASTM F 791, and ASTM G 155.

2.3.2.3 Polycarbonate Plastic Sheets

Polycarbonate plastic sheet shall be laminated or solid, ultraviolet stabilized flame resistant sheets shall conform to ASTM D 3595. Polycarbonate materials shall be tested in accordance with the applicable sections of the following testing procedures: ASTM D 256, ASTM D 5420, ASTM D 648, ASTM D 792, ASTM F 735, ASTM D 1003, ASTM D 635, ASTM D 638, ASTM D 1044, ASTM D 882, ASTM D 1922, ASTM D 570, ASTM F 520, ASTM E 168, ASTM E 169, ASTM G 155, and ASTM F 791. Polyvinyl butyral shall not be used in contact with polycarbonate because its placticizer may craze polycarbonate.

2.3.2.4 Glass/Plastic Laminate Glazing

Glass/plastic laminated glazing materials shall be glass/plastic laminated construction or glass-clad plastic "sandwich" construction conforming to applicable sections of ASTM C 1172.

2.3.2.5 Glass/Plastic Air-Gap Glazing

Forced entry resistant glass/plastic air-gap glazing shall consist of an assembly in which glass forms the exterior and interior protected side layer, separated by an air space from the laminated plastic plies. Glass plies shall be annealed float glass conforming to Type I, quality q3, Class 1. Plastic plies shall consist of laminated ultraviolet stabilized polycarbonate sheets, conforming to paragraph Polycarbonate Plastic Sheets and/or acrylic sheets for use "as cast" and in stretching operations with improved moisture absorption resistance conforming to paragraph Acrylic Plastic Sheets.

2.3.3 Adhesive Interlayer Materials

Adhesive interlayer material for bonding laminates glass-plastic, or plastic-plastic bondsshall be chemically compatible with the surfaces bonded. Interlayer materials may be polyvinyl butyral, cast-in-place urethane, proprietary materials, sheet from urethane and other materials. Polyvinyl butyral shall not be used to bond polycarbonate. Adhesives shall conform to ASTM D 905 and the manufacturer's recommendations.

2.3.4 Sealants

Sealants for glazings shall be chemically compatible with the glazing materials they are in contact with and shall have no deleterious effects to the glazing materials or to the adhesives used in glazing laminates. Sealants shall conform to the glazing manufacturer's recommendations and the requirements of GANA Glazing Manual.

2.4 [Enter Appropriate Subpart Title Here]

2.5 [Enter Appropriate Subpart Title Here]

2.6 ACCESSORIES

Accessories shall be provided for the installation of components into the surrounding structure. Anchorage shall be forced entry resistant to the same degree as the component. Installation shall be in accordance with the manufacturer's recommended instructions. Materials, parts, bolts, anchors, supports, braces, fasteners, and connections necessary for completion of the work.

2.7 LABELING

Forced entry resistant components shall be plainly and permanently labeled as to the applicable forced entry test standard and level within the test standard under which the component was tested and approved. Label shall be visible only from the protected side after component installation and shall include the following information: (1) manufacturer's name or identifying symbol; (2) model number, control number, or equivalent; (3) date of manufacture with the week, month or quarter, and year (this may be abbreviated or be in a traceable code such as the lot number); (4) correct mounting position (by removable label); and (5) forced entry resistant rating by indicating the test standard, level within the test standard (if any), and minutes of attack time withstood (if variable in the standard).

PART 3 EXECUTION

3.1 FABRICATION

Components shall be constructed, assembled, welded, and equipped with all hardware and accessories required to complete the assembly in the shop of a competent fabricator.

3.2 FASTENERS

Fasteners exposed to view shall match in color and finish and shall harmonize with the material to which fasteners are applied. Holes for bolts and screws shall be drilled or neatly punched. Poor matching of holes shall be cause for rejection of the work. Fasteners shall be concealed where practicable. Unless otherwise specified, fasteners shall conform to Section 05500 METAL: MISCELLANEOUS AND FABRICATIONS.

3.3 SHOP/FACTORY FINISHING

Unless otherwise specified, all factory or manufactured components shall be shop finished as indicated below.

3.3.1 Ferrous Metal

Surfaces of ferrous metal, except galvanized and stainless steel surfaces, shall be cleaned and factory primed for painting. Finish painting shall be in accordance with Section 09900 PAINTS AND COATINGS. Prior to shop painting, surfaces shall be cleaned with solvents to remove grease and oil and with power wire-brushing or sandblasting to remove loose rust, loose mill scale, and other foreign substances. Surfaces of items to be embedded in concrete shall not be shop painted.

3.3.2 Galvanizing

Items specified to be galvanized shall be hot-dip processed after fabrication. Galvanizing shall be in accordance with ASTM A 123/A 123M or ASTM A 653/A 653M.

3.3.3 Aluminum

Unless otherwise specified, aluminum items shall be standard mill finish. When anodic coatings are specified, coatings shall conform to AA STFA-601711, with treatment to a coating thickness not less than that specified for protective and decorative type finish in AA DAF-45. Items to be anodized shall receive a polished satin finish pretreatment and a clear lacquer overcoat conforming to the above-referenced standard.

3.4 CORROSION PROTECTION - DISSIMILAR MATERIALS

Contact surfaces between dissimilar metals and aluminum surfaces in contact with concrete, masonry, pressure-treated wood, or absorptive materials subject to wetting shall be given a protective coating in accordance with Section 09900 PAINTS AND COATINGS.

3.5 PREPARATION AND PROTECTION

The Contractor shall field verify dimensions of rough openings for components and shall verify that surfaces of openings are level, plumb, and provide required clearances. Components shall be examined for racking, twisting, and other malformation and corrected prior to installation. Damaged components that cannot be corrected shall be replaced. The Contractor shall protect surrounding work prior to installation of forced entry resistant components. Surrounding work which is damaged as a result of the installation of forced entry resistant components shall be repaired in an approved manner prior to acceptance. Glazed units shall be protected from damage during adjacent work.

3.6 INSTALLATION

The finished work shall be free from defects. Components shall be installed plumb and level and secured rigidly in place. Components shall be installed in accordance with approved manufacturer's recommended instructions. Operable parts of components shall be tested for smooth operation in the presence of the Contracting Officer. The Contractor shall coordinate frame embedments into the construction where required by the component manufacturer. Materials which incur damage as a result of adjacent finish work shall be replaced or repaired as specified above. Window assemblies which are not specified as factory glazed shall have glazing installed in accordance with GANA Glazing Manual and the manufacturer's recommended instructions. Field glazing shall occur only after concrete, masonry, ceiling, electrical, mechanical, plumbing and adjacent finish work has been completed. The Contractor shall be responsible for proper installation of forced entry resistant door assemblies so that operating clearances and bearing surfaces conform to the manufacturer's instructions. The bottom of door frames shall be secured to the floor slab in accordance with the manufacturer's recommendations. Weatherstripping and thresholds shall be installed at exterior door openings to provide a weathertight installation.

3.7 MANUFACTURER'S SERVICES

The manufacturer shall provide the services of a manufacturer's representative who is experienced in the installation, adjustment, and operation of the component specified. At the request of the Contracting Officer, the representative shall supervise the installation, adjustment, and operation (if operable) of the component. The representative shall be onsite 2 working days.

3.8 ADJUSTING/CLEANING

Adjustments shall be made to assure smooth operation. Units shall be weathertight when closed and locked. All Components shall be cleaned in accordance with manufacturer's instructions. Only cleanser recommended by the manufacturer shall be used to clean polycarbonate, plastic, and applied hardcoats.

-- End of Section --

SECTION 11193

DETENTION HOLLOW METAL FRAMES, DOORS, AND DOOR FRAMES

PART 1 GENERAL

1.1 REFERENCES

The publications listed below form a part of this specification to the extent referenced. The publications are referred to within the text by the basic designation only.

ASTM INTERNATIONAL (ASTM)

ASTM A 366/A 366M	(1997e1) Commercial Steel, Sheet, Carbon,(0.15 Maximum Percent Cold-Rolled

NATIONAL ASSOCIATION OF ARCHITECTURAL METAL MANUFACTURERS (NAAMM)

NAAMM HMMA 863	(2004) Guide Specifications for Detention Security Hollow Metal Doors and Frames

1.2 SUBMITTALS

Government approval is required for submittals with a "G" designation; submittals not having a "G" designation are for information only. When used, a designation following the "G" designation identifies the office that will review the submittal for the Government. The following shall be submitted in accordance with Section 01330 SUBMITTAL PROCEDURES:

SD-02 Shop Drawings

Detention hollow metal doors and frames

Submit details at not less than 1/4 full size for each frame type, and elevations of door design type at 1:50minimum, show conditions at openings, details of construction, location and installation requirements of finish hardware and reinforcements, and details of joints and connections. Indicate fabrication, erection, anchorage, and accessory items.

Submit a schedule listing the location of each door and frame using indicated reference numbers for details and openings shown.

SD-03 Product Data

Detention hollow metal doors and frames

Submit manufacturer's material and fabrication specifications.

SD-06 Test Reports

Door fabrication

Prior to fabrication, submit test report for reinforced flush door of the type to be provided on this project.

1.3 DELIVERY, STORAGE, AND HANDLING

Deliver hollow metal work with packaging to provide protection during transit and job storage as recommended by the manufacturer. Door frames shall be provided with steel spreader angles, temporarily attached to the bottom of both jambs, one on each side of the opening to serve as a brace during shipping and handling. Inspect hollow metal work upon delivery for damage. Store hollow metal units on raised platforms in vertical positions with blocking between units to allow air circulation. Keep stored material covered and protected from damage and rust. Do not cover with plastic or unvented canvas.

1.4 HARDWARE COORDINATION CONFERENCE

Conduct a conference for hardware and hollow metal work prior to submittals for the purpose of coordinating the interface of materials that are furnished by the participants listed. Require that a representative of the entity responsible for each of the following functions attend the conference. Notify the following participants a minimum of 5 working days before the conference:

a. Contractor

b. Hollow metal supplier and installer

c. Detention hollow metal supplier and installer

d. Hardware supplier

e. Hardware installer

f. Detention hardware supplier

g. Detention hardware installer

PART 2 PRODUCTS

2.1 MATERIALS

2.1.1 Hot-Rolled Carbon Steel

ASTM A 569/A 569M, commercial quality, 14 gage and thicker.

2.1.2 Cold-Rolled Carbon Steel

ASTM A 366/A 366M, commercial quality, stretcher level sheets, 12 gage.

2.1.3 Galvanized Steel

ASTM A 653/A 653M, CQ, mill phosphatized tested by ASTM G 60.

2.2 DETENTION HOLLOW METAL DOORS AND FRAMES

2.2.1 Door Fabrication

a. Provide doors fabricated of cold rolled, pickled and oiled

stretcher leveled steel sheets with clean smooth surfaces. Gages shall be as indicated for each type of door. Form molded members straight with joints coped or mitered, and in true alignment. Welded joints on exposed surfaces shall be dressed smooth, to be invisible. Doors shall be custom made full flush design, internally reinforced, sound deadened and insulated, 50 mm thick to receive detention locks, of the elevations, types and sizes shown on the approved shop drawings and schedules.

b. Face sheets shall be mild steel fully welded on edges with continuous inner-reinforcements full height and width. Provide internally 10 gage steel channel banding around complete door perimeter, spot welded to face sheet 75 mm on center. Inner reinforcements shall be truss design with triangular form, or interlocking channels with "Z" bar stiffeners, the shape of which cannot be altered without changing the length of the sides. Flat apexes shall be resistance spot welded on 70 mm centers horizontally and 75 mmcenters vertically. Insulate each flute of reinforcement with 96 kg/cubic meter density rock wool.

c. Bevel vertical door edges 3 mm in 50 mm and internally reinforced full length with 3 mm thick steel channels spot welded not over 75 mm on center inside both door faces. Close top and bottom door edges with continuous recessed 10 gage channels extending the full width of the door and welded 75 mm on center maximum to both faces and continuously welded to the vertical door edge channels to form a single perimeter frame inside the door. Top and bottom edges of doors shall be finished flush, except for provisions for weatherproofing. Mortise, reinforce, drill and tap door edges to receive templated specified hardware in accordance with the approved hardware schedule and the hardware manufacturer's recommendations for the proper installation of hardware and detention equipment.

d. Clearances shall be coordinated with frame and in accordance with NAAMM HMMA 863, Part 2, Section 2.02.

e. Doors shall be free from warpage, wind or buckle. Bends shall be of minimum radius for the gage of metal used.

f. The removable glass stop shall consist of 10 gage angle securely fastened to the frame using machine screws (6 mm #20UNRC: 25 mm at 150 mm on center and no more than 100 mm from corners). Exposed screw heads shall be button head type, and shall be torx fitting tamperproof. The finished glass stop shall be tight fitting and mitered at the corner joints. There shall be a minimum 25 mm glass engagement.

2.2.2 Door and View Window Frame Fabrication

a. Custom-made, fully assembled, factory-welded units of the size and shapes shown on the approved shop drawings. "Knock-down" frames will not be accepted. Coordinate frame dimension to thickness of door or glass.

b. Strong, rigid, neat in appearance, and free from defects. Frame members shall be clean cut, straight, and of uniform profile.

c. Form frames to provide mitered trim and butted stops. Join head

and jamb members by continuous welds occupying the full depth and width of the frame. Grind exposed welds smooth and flush.

d. When frames are for door light or food pass, fabricate members as closed tubular shapes having no visible seams or joints on exposed surfaces. Grind exposed welds smooth and flush.

e. Frames over 1200 mm wide installed in masonry partitions shall have a channel stiffener not less than 13 gage welded into the head at the factory.

f. Protect cutouts and reinforcements with pressed steel mortar guards on the inside of the frame.

g. Floor anchors formed of not less than 12 gage steel shall be securely welded to the bottom of each jamb.

h. Frames for installation in masonry walls shall be provided with non-removable adjustable jamb anchors constructed of not less than 14 gage material. Provide jamb anchors at 400 mm on center.

i. Welded frames that are to be installed in previously prepared masonry openings shall be 12 mm smaller in width and 6 mm smaller in height than the masonry opening to provide 6 mm clearance on all sides.

j. Removable glass stop for view window frame shall consist of 10 gage angle securely fastened to the frame using machine screws of 6 by 32 mm spaced at 200 mm on center maximum. Exposed screw heads shall be round, pan, or oval type, and shall be torx drive, tamperproof. The finished glass stop shall be tight fitting and mitered at the corner joints. There shall be a minimum of 25 mm glass engagement. Install plaster guards covering the glass stop screws on masonry grouted frames.

k. When shipping limitations dictate, frames for large openings shall be fabricated in sections designed for field welded splicing. Welds shall be ground smooth and primed for painting. Sections shall be assembled at the factory to ensure proper fit and be clearly marked for field reassembly.

2.2.3 Door Reinforcement for Hardware

a. Mortise, reinforce, drill, and tap doors at the factory for mortised hardware in accordance with the approved hardware schedule and templates. Doors to receive surface-mounted hardware shall have inner reinforcing plates for drilling and tapping to be performed in the field.

b. For each mortised hinge, provide a reinforcing plate measuring 5 by 38 by 250 mm that is continuously welded inside the edge channel. The top hinge preparation shall be additionally braced by a channel, welded to the back of the hinge reinforcing plate and inside the edge reinforcing channel.

c. Where detention locks are scheduled, provide reinforced pocket to receive locks. The secure side of the door shall be finished flush with a 5 mm backup plate to protect lock. Form the pocket perimeter of 12 gage channels on three sides with the door edge

channel completing the perimeter frame. Do not cut the door edge channel except for passage of the lock bolt. Provide a 5 mm thick steel mounting and protection plate to cover the lock pocket and extend at least 20 mm on three sides beyond the cutout. Secure the lock to the protection plate in accordance with the lock manufacturer's instructions. Secure the cover plate to the door by at least six 6 mm security-type machine screws. Make provisions so that removal of the lock is impossible when the lock bolt is extended.

d. Reinforcements for door pulls shall be 5 mm steel welded inside door. Reinforcement size shall be 38 by 250 mm for loop type pull and 150 by 175 mm for flush type pull. Minimum 12 gage reinforcing shall be welded inside the door for all other surface hardware items.

2.2.4 Frame Reinforcement for Hardware

a. Mortise, reinforce, drill, and tap frames at the factory for templated mortised hardware, in accordance with the approved hardware schedules and templates. Where surface-mounted hardware is to be applied, frames shall have reinforcing plates completely drilled and tapped for installation in the field.

b. For each mortised hinge, provide a 7 gage, off-set reinforcing plate that is factory drilled and tapped and measures 38 by 250 mm. Top hinge reinforcement shall be additionally braced by a 7 gage backup angle welded to the reinforcement and to the inside of the frame trim.

c. Where electrical frame-mounted locks are used, provide a special housing with a 7 gage backup for attachment of the lock and a lock cover plate of the same thickness. Provide a junction box or enclosure behind each item of electrical hardware on the frame. Conduit shall be factory installed between interconnecting electrical items within each frame.

d. All other mortised and surface-mounted hardware reinforcements shall be not less than 12 gage.

2.2.5 Factory Finishing

a. After fabrication, dress, fill, and sand tool marks and surface imperfections to make faces and vertical edges smooth, level, and free of irregularities.

b. Surfaces shall be chemically treated and cleansed of rust, oil, and impurities and given a phosphate treatment to ensure paint adhesion.

c. Paint exposed surfaces of doors, and both inside and outside of frames with a minimum of one-mil thickness of rust inhibitive primer which shall be dried and completely cured to develop hardness before shipment.

2.3 ACCESS PANELS

Provide steel access panels of sizes and locations as indicated and where required for access to utilities, equipment, and controls.

a. Doors shall be 10 gage steel, flanged 32 mm on four sides, with welded corners.

b. Frame shall be composed of steel angles measuring 5 by 50 by 50 mm. Weld and grind joints smooth.

c. Provide detention type hinges with nonremovable pin, three per frame. Weld to door and frames.

d. Weld steel stop angles measuring 3 by 25 by 25 mm to frame on all four sides.

e. Masonry anchors shall be welded at factory, 3 by 25 by 150 mm, minimum four per panel.

f. Factory finish with prime coat of rust-inhibitive, baked-on enamel.

g. Provide locks at panels within the security perimeter . Lock case and cover shall be malleable iron and steel. Bolt shall be high strength bronze and project 20 mm from case when retracted and have a throw of not less than 16 mm. Locks shall have five tumblers, each actuated by phosphor bronze springs. Locks shall operate from one side only. Attach to panel with detention type screws. Locks shall be keyed alike. Enter coded keys into keying system as specified in Section 11194 DETENTION HARDWARE.

2.4 OPENING PROVISION

Louvers shall be manufactured as indicated.

2.5 SOURCE QUALITY CONTROL

Prior to fabrication, perform the following minimum performance test on a 12 gage reinforced flush door of the type to be provided on this project:

a. Test "A" - Static Load: Under centrally applied load of 62 kN (32 kPa) at quarter points, the maximum permitted deflection shall be 15 mm with a rebound of 0.4 mm after release of load.

b. Test "B" - Rack Test: Under a concentrated load of 33 kN on one unsupported corner of door, the maximum deflection shall not exceed 90 mm without failure.

PART 3 EXECUTION

3.1 INSTALLATION

3.1.1 Door Schedule

Refer to door schedule on drawings for location of doors, door frames, and door hardware.

3.1.2 Frames

Set frames accurately in position, plumbed, aligned, and braced securely until permanent anchors are set. After completing wall construction, remove temporary braces and spreaders. Do not use any part of the frame as lintels or load-carrying members. Anchor frame to masonry with flat head

security type machine screws into expansion shields or attached to a pre-set rough buck anchored to the masonry in the same way. Install five anchors on each jamb for doors up to and including 2250 mm in height and six on each jamb for taller doors.

3.1.3 Doors

Fit hollow metal doors accurately in frames. Provide metal shims where necessary.

3.1.4 Access Panels

Prepare openings as required to receive frame. Use fasteners as specified and required by type of surrounding construction. Ensure that frames are properly seated into opening with steel shims and that doors are true, in alignment, and completely flush in appearance. Maintain 3 mm maximum clearance between door and frame.

3.2 ADJUSTMENT AND CLEANING

Remove and replace defective work which is warped, bowed, or otherwise damaged. Adjust hollow metal work for smooth operation. Touch up scratches and bare edges in the field with a rust inhibiting primer prior to painting.

-- End of Section --

SECTION 11194

DETENTION HARDWARE

PART 1 GENERAL

1.1 REFERENCES

The publications listed below form a part of this specification to the extent referenced. The publications are referred to within the text by the basic designation only.

BUILDERS HARDWARE MANUFACTURERS ASSOCIATION (BHMA)

BHMA A156.1	(2000) Butts and Hinges
BHMA A156.16	(2002) Auxiliary Hardware
BHMA A156.18	(2000) Materials and Finishes
BHMA A156.4	(2000) Door Controls - Closers
BHMA A156.5	(2001) Auxiliary Locks & Associated Products
BHMA A156.6	(2001) Architectural Door Trim
BHMA A156.7	(2003) Template Hinge Dimensions

UNDERWRITERS LABORATORIES (UL)

UL 437	(2000; Rev thru Mar 2004) Key Locks

1.2 SUBMITTALS

Government approval is required for submittals with a "G" designation; submittals not having a "G" designation are for information only. When used, a designation following the "G" designation identifies the office that will review the submittal for the Government. The following shall be submitted in accordance with Section 01330 SUBMITTAL PROCEDURES:

SD-01 Preconstruction Submittals

Detention hardware schedule

SD-02 Shop Drawings

Type 1 lock

Detention hinges

Submit complete system wiring diagrams for locks and controls, following approval of the detention hardware schedule. Indicate electrical requirements for locks and controls.

SD-03 Product Data

Keys and cylinders

Detention hinges

Detention locks

Door trim

Security door accessories

Submit details of construction and methods of installation, finishes, sizes, shape, alloy and thickness of materials. Include wiring details and electrical specifications.

1.3 QUALITY ASSURANCE

1.3.1 Qualifications of Installer

The work shall be installed by a detention equipment installer approved by the detention hardware manufacturer.

1.3.2 Regulatory Requirements

c. Detention hardware for doors that are considered "Means of Egress" shall meet applicable requirements of NFPA 101.

1.3.3 Schedule Requirements

Submit detention hardware schedule at the same time hardware samples are submitted. Schedule shall include quantities, manufacturer's catalog numbers, descriptive information, location, sizes, finish, key control symbols including keying systems for each piece. Use the same door marks as shown on the schedule in the contract documents.

1.4 DELIVERY, STORAGE, AND HANDLING

1.4.1 Keys

Send to the Contracting Officer directly from the manufacturer via registered mail.

1.4.2 Detention Hardware

Deliver in a timely manner and store in accordance with the manufacturer's recommendations. Deliver in manufacturer's original container and protect from damage by weather.

1.5 HARDWARE COORDINATION CONFERENCE

Conduct a hardware coordination conference for hardware and hollow metal

work prior to submittals for the purpose of coordinating the interface of materials that are furnished by the participants listed. Require that a representative of the entity responsible for each of the following functions attend the conference. Notify participants a minimum of 5 working days before the conference.

a. Contractor

b. Hollow metal supplier and installer

c. Detention hollow metal supplier and installer

d. Hardware supplier

e. Hardware installer

f. Detention hardware supplier

g. Detention hardware installer

h. Locking control system supplier and installer

j. Contracting Officer

1.6 MAINTENANCE TOOLS

Furnish six tool holders and bits for each different size and type of screw and fastener.

1.7 TEMPLATES

Furnish templates for door and frame preparation.

PART 2 PRODUCTS

2.1 FINISH

Finish surfaces, painted surfaces and painted items shall be in accordance with BHMA A156.18 and as follows:

2.1.1 Painted Surfaces

600.

2.1.2 Finish Surfaces

626 or 630.

2.1.3 Painted Items

689.

2.2 KEYS AND CYLINDERS

BHMA A156.5.

2.2.1 Mogul Keys

Keys for pin tumbler locks shall be not less than 73 mm in length, blade shall be 14 mm wide by 3.2 mm thick. Handle shall be 25 mm in diameter. Stamp each key with number or letter per code.

2.2.2 Mogul Cylinder

Provide a special "Mogul" cylinder approximately twice the diameter of a commercial mortise lock cylinder with internal parts proportionately larger. Special "Mogul" keys and restricted keying are required. The sale of cut keys and blanks shall be factory regulated to control usage and reproduction. The design shall be wear and pick resistant and shall include a minimum of five stainless steel 4 mm diameter pin tumblers, stainless steel springs, and stainless steel ball bearings which intermesh with the key and pin tumblers. Cylinder shall conform to UL 437.

2.2.3 Builders Cylinder

Type E09211A. Keys shall be for restricted use. Cylinder shall conform to UL 437.

2.3 KEYING SYSTEM

Keying system shall consist of dissimilar combinations with external doors keyed alike; internal corridor doors keyed alike; utility spaces; each group of cells keyed alike but different from other groups. Establish two separate detention key systems; one system shall be for the security Mogul type hardware, and one for the paracentric key system.

2.4 DETENTION HINGES

Provide hinges in accordance with BHMA A156.1 and BHMA A156.7. Type A8191 HT with stainless steel maximum security pin. Type A8192 HT with stainless steel maximum security pin. The 225 mm denotes 4 wire continuous conduction. Screws shall be twist-off or spanner head. Sizing shall be in accordance with standard. Hinges shall be drilled and counter-sunk for proper size machine screws. Use zinc coated hinges on exterior doors with a prime coat.

2.5 DETENTION LOCKS

2.5.1 Type 1 Lock

Electro-mechanical solenoid operation lock; jamb mounted for use with security hollow metal doors with the following features:

b. Cylinder operated one or two sides using mogul or builders cylinders.

c. Lock case 10 gage minimum galvanized cold-rolled steel.

d. Latch Bolt 20 mm throw stainless steel.

e. Bronze or stainless steel face plate.

g. Strike and mounting screws.

h. Push button in frame if on a cell door.

2.5.2 Type 2 Lock

Mechanical deadlock; lever tumbler deadlock for use with security hollow metal doors with the following features:

a. Paracentric key operated one or two sides.

b. Six lever tumblers with spring temper brass/bronze springs.

c. Steel or stainless steel deadbolt with saw resistant insets.

d. Bolt 20 by 50 mm with 20 mm throw.

e. Lock case primed for paint or galvanized.

f. Lock mount plate including escutcheon, mounting screws, and strike.

2.5.3 Type 7 Lock

Mechanical spring lock for use on chase and access doors with the following features.

a. Mogul key operated one side only.

b. Five lever tumblers with spring temper brass/bronze springs.

c. Malleable iron case and cover.

d. Bolt retracted by key 25 by 12.7 mm with 11 mm throw.

e. Lock case and cover primed for paint.

f. Mounting screws and strike.

2.6 DOOR CLOSERS

2.6.1 Type 1 Door Closers

Surface mounted door closer shall conform to test requirements of BHMA A156.4, PT 1, Grade 1.

b. C02021: Parallel Arm Type

2.6.2 Type 2 Door Closer

Conceale

2.7 STRIKES

Mortised strikes shall be compatible with the lock which it serves. Provide dust box and switch to monitor lock bolt where indicated in set numbers.

2.8 DOOR TRIM

2.8.1 Loop Type Pulls

stainless steel 200 mm center-to-center surface mounted with spanner type screws. Pulls shall be in accordance with BHMA A156.6 J401.

2.8.2 Flush Type Pulls

stainless steel set for one side or back to back mounting with spanner type screws. Pulls shall be in accordance with BHMA A156.6 J403.

2.8.3 Door Stops and Holders

2.8.3.1 Type PH1

2.8.3.2 Type PH2

2.8.3.3 Type OH3

2.8.3.4 [Enter Appropriate Subpart Title Here]

2.8.3.5 Type FS3

2.9 DEADBOLTS

Surface mounted and 25 mm diameter with 20 mm throw. Bolt shall be operated by spanner key case, be malleable iron, or steel with cover. Attachment shall be with spanner head screws.

2.10 DOOR POSITION SWITCHES

2.10.1 Type 1 Door Position Switch

Mechanically mortised door position switch with the following features:

a. Components concealed when door is in closed position.

d. Actuator arm track mortises into the top rail of the door.

e. Allows door opening 180 degrees.

2.10.2 Type 2 Door Position Switch

2.11 SECURITY DOOR ACCESSORIES

2.11.1 Wall Bumpers

In accordance with BHMA A156.16 Type L02101.

2.11.2 Thresholds

Aluminum extrusion minimum thickness 4.4 by 125 mm wide by 12 mm .

2.11.3 Drip Strip

Extruded galvanized steel strip 64 mm wide with 16 mm back strip. Attach to shower doors with a continuous weld.

2.11.4 Weatherstrip

Apply for head and jambs, pressure sensitive adhesive silicone rubber seal.

2.12 SCREWS AND FASTENERS

Comply with detention manufacturer's standard fastening hardware and recommendations for size, type, and material.

2.12.1 Fabrication

Finish exposed fasteners to match hardware fastened. Fabricate fasteners of the same metal as hardware fastened, except use plated brass or stainless steel for fastening aluminum.

2.12.2 Location

Provide spanner head screws and fasteners for exposed hardware.

2.13 TEMPLATE HARDWARE

Hardware to be applied to frames and to doors shall be made to template.

PART 3 EXECUTION

3.1 EXAMINATION

Examine doors, frames, and hardware for damage, defects, and suitability for intended use. Inspect components and adjacent areas of construction for conditions that could be detrimental to the proper operation or performance of the detention hardware.

3.2 INSTALLATION

Sequence and procedures for installation shall be in accordance with detention hardware manufacturer's instructions.

3.3 ADJUSTMENT AND CLEANING

Examine hardware for complete and proper installation. Lubricate bearing surfaces of moving parts. Adjust hinges, locks, and keepers to function properly. Test keys for smooth operation and for conformance to approved keying system. Hardware shall operate freely without binding and be properly aligned. Protect hardware from paint, stains, weather, and other damage until acceptance of the work.

3.4 FIELD QUALITY CONTROL

After hardware has been installed and placed in operating order, conduct performance tests which shall demonstrate to the Contracting Officer that

the hardware operates as specified. Remove items that fail to conform to the requirements specified and replace with new.

3.5 TRAINING

Upon completion of the work and at a time designated by the Contracting Officer, a manufacturer's technical service representative or manufacturer's authorized representative for the locking control system, shall instruct Government personnel in the proper operation, troubleshooting, maintenance, safety, and emergency procedures of the system. The period of instruction shall be four 8-hour sessions. Conduct training at the job site. The Government shall have the option to video tape training sessions. Notify the Contracting Officer at least two weeks in advance.

3.6 HARDWARE SETS

Abbreviations Used in Hardware Sets

PC	-	Prime Coat
EC	-	Solenoid operated continuous duty
MC	-	Motor operated continuous duty
L	-	Limit switch tripped by spring bolt
LL	-	Limit switch tripped by spring bolt and roller bolt
H	-	Holdback feature
S	-	Square bolt
K	-	Knob feature
SHS	-	Scanner Head Screws
AL	-	Aluminum

SH-1

(3) Type A8191HT hinges x Prime Coat x Spanner Head Screws
(1) Type 1 lock x keyed 1 side x EMCLL x SHS
(1) Loop type door pulls
(1) Flush type pull x SHS
(1) Wall Bumper x SHS

SH-2

(3) Type A8191HT hinges x PC x SHS
(1) Type 1 lock x keyed 2 sides x EHMLL x SHS
(2) Loop type door pulls
(1) Type 1 door position switch x SHS
(1) Type 1 door closer x AL x SHS
(1) Wall bumpers x SHS

SECTION 11311

PARALLEL PLATE , GRAVITY OIL-WATER SEPARATOR FOR POWER PLANT

PART 1 GENERAL

1.1 REFERENCES

The publications listed below form a part of this specification to the extent referenced. The publications are referred to in the text by the basic designation only.

AMERICAN ASSOCIATION OF STATE HIGHWAY AND TRANSPORTATION OFFICIALS (AASHTO)

AASHTO HB-17	Highway Bridges-Division I-Section 14: Bearings

ASME INTERNATIONAL (ASME)

ASME B16.5	(1996) Pipe Flanges and Flanged Fittings

ASTM INTERNATIONAL (ASTM)

ASTM A 36/A 36M	(2000a) Carbon Structural Steel
ASTM E 165	(1996) Liquid Penetrant Examination

AMERICAN WELDING SOCIETY (AWS)

AWS D1.1/D1.1M	(1998) Structural Welding Code - Steel

FEDERAL STANDARDS (FED-STD)

FS SS-S-210	(Rev. A Reinst) Sealing Compound, Preformed Plastic, for Expansion Joints and Pipe Joints

MILITARY SPECIFICATIONS (MS)

MIL-P-24441	(Rev. B; Supp. 1) Paint, Epoxy-Polyamide
MIL-S-45180	(Rev. D) Sealing Compound, Gasket, Hydrocarbon Fluid and Water Resistant

THE SOCIETY FOR PROTECTIVE COATINGS (SSPC)

SSPC SP 10	(1994; R 1995) Near-White Blast Cleaning

STEEL TANK INSTITUTE (STI)

STI P3	(1999) Specification and Manual for External Corrosion Protection of Underground Steel Storage Tanks

1.2 SYSTEM DESCRIPTION

1.2.1 Applications

The separator shall remove free oil and emulsified oil and suspended solids from oil-in-water mixtures of oily waste originating from engine/generator room. The influent oil-in-water mixture will flow by gravity to the unit which will not be located in an area with a corrosive atmosphere.

1.2.2 Influent Characteristics

Provide oil-water separator designed for a maximum flow of 3.5 liters per second. Operating temperatures of the influent oil-in-water mixture will range from 10 to 30 degrees C and ambient air temperatures will range from -12 to 35 degrees C. The specific gravity of the oil at operating oil-water temperatures will range from 0.79 to 0.95. The specific gravity of the freshwater at operating temperatures will be 1.0.

1.2.3 Performance Requirements

The grease and oil concentration in the effluent from the oil-water separator shall not exceed the following limitations:

Contaminants	Maximum
Total grease and oil, 30-day average	10.0 mg/L

To achieve this goal, it will be necessary to remove all free oil droplets equal to or greater than 20 microns.

1.3 MATERIAL AUTHENTICATION DATA INCLUDED IN DESIGN ANALYSIS

The following is submitted in accordance with Section 01335 SUBMITTAL PROCEDURES FOR DESIGN/BUILD PROJECT. It is included in the Design Analysis for this project.

SD-02 Shop Drawings

Separator

Accessory equipment

Submit shop drawings for separator and accessory equipment including principal dimensions, location of fittings and unit foundation. Include data to verify center of gravity with the unit empty and filled with water.

SD-05 Design Data

Separator

Accessory equipment

Submit analysis, signed by a registered professional engineer, which indicates that at the calculated overflow rate, the separator will be provided with the required square meter of projected plate separation area to achieve the specified performance under laminar flow (i.e. Reynolds number of less than 500) conditions. Calculations shall take into account the rate of

flow, potential surge flow, influent concentrations, particle characteristics, fluid temperature, fluid specific gravities, and pH.

1.4 SUBMITTALS

The following shall be submitted in accordance with Section 01335 SUBMITTAL PROCEDURES for design built project:

SD-06 Test Reports

Shop hydrostatic test

Submit results of hydrostatic and dynamic testing.

Inspection

Field hydrostatic test

Preoperational test

In-service test

SD-07 Certificates

Separator corrosion protection

Submit written verification on the fabricator's letterhead that surface preparation and coating application were performed in accordance with the manufacturer's printed recommendations for the coating system.

SD-08 Manufacturer's Instructions

Separator system

SD-10 Operation and Maintenance Data

Separator system

Accessory equipment

1.5 DOCUMENTATION FOR PROPOSED VARIANT PRODUCTS

For products not explicitly named in the specification that meet product requirement criteria named herein, product data as listed in article titled MATERIAL AUTHENTICATION DATA INCLUDED IN DESIGN ANALYSIS shall be submitted for review. Product information will be provided to establish that proposed product meets the requirements of this specification and has the indicated qualities related to type, function, dimension, in-service performance, physical properties, appearance, or other relevant characteristics that equal or exceed those of specified product. Product is consistent with the Contract Documents and will produce the indicated results, and is compatible with other portions of the Work.

1.6 DELIVERY, STORAGE, AND HANDLING

1.6.1 Delivery and Storage

Inspect materials delivered to site for damage; unload and store with minimum handling. Store materials on-site in enclosures or under protective coverings. Protect materials not suitable for outdoor storage to prevent damage during periods of inclement weather, such as subfreezing temperatures, precipitation, and high winds. Store materials susceptible to deterioration by direct sunlight under cover and avoid damage due to high temperatures. Do not store materials directly on ground. If special precautions are required, prominently and legibly stencil instructions for such precautions on outside of equipment or its crating.

1.6.2 Handling

Handle separator in such a manner as to ensure delivery to final location in sound, undamaged condition. Take special care not to damage interior and exterior surfaces of separator, coalescing plates, and associated supports and pipe coatings or linings. Make satisfactory repairs to damaged materials at no cost to Government. Carry and do not drag materials.

PART 2 PRODUCTS

Oil separator for the Maintenance Garage shall be as specified in section 15400.

2.1 MANUFACTURERS

Basis of Design: Highland Tank, Model HTC-G-H-EZ 550.

Acceptable Manufacturers:

1. Basis of Design manufacturer.
2. Equivalent product complying with requirements of this specification for proposed variant products.

2.2 MATERIALS

Use 4.6 mm (inner) and 3.4 mm (outer)minimum thick carbon steel conforming to ASTM A 36/A 36M or material having equivalent structural properties and corrosion resistance for separator, hoppers, stationary and adjustable weirs, nozzles, flow distributor and energy dissipator device, bolts, seals, stiffeners, washers, separator cover and nuts. Weld in accordance with AWS D1.1/D1.1M to provide watertight separator that will not warp or deform under load. Use welders qualified in accordance with AWS Standard Qualification Procedure. Grind welds smooth and remove weld spatter. Fabricate free of kinks and sharp bends in a manner not to reduce the strength of steel to a value less than that intended by the design. Size and shape of bends shall be uniform. Clean and finish carbon steel surfaces as described in paragraph entitled "Separator Corrosion Protection."

2.2.1 Separator Corrosion Protection

2.2.1.1 Steel Separator

After shop conducted hydrostatic tests have been successfully completed,

provide a MIL-P-24441 coating system to the interior and exterior surfaces of the separator. Exterior coating shall meet STI P3. Prior to shop painting, abrasive blast clean the surfaces in accordance with SSPC SP 10 (internal) and SP6 (external). Apply two-component polyurethane coating to a minimum dry film thickness of 0.25 mm (internal) and 0.38 mm (external). Repair and replace areas of the coating system which are found to be damaged or defective upon delivery of equipment to the site or found to be defective due to work of the applicator.

External Coating: Chemthane 2240 or equal.

Internal Coating: Highland Tank Internal Polyurethane Tank Lining or equal.

2.2.1.2 Cathodic Protection

For below ground metal separators, provide cathodic protection with test stations shall be in accordance with STI P3.

2.2.2 External Surfaces

External surfaces and appurtenances shall be resistant to corrosion from the in situ soil, backfill material, groundwater, and surface runoff .

2.2.3 Internal Surfaces

Parallel plate material and orientation shall enhance oil coalescence and solids removal, and be corrosion and chemically resistant to the oil-in-water mixture.

2.2.4 Hardware

Bolts, stiffeners, washers, nuts, screws, pins, and fittings as required shall be corrosion resistant. Provide materials that are inherently corrosion resistant and not merely treated with a corrosion-resistant coating, such as provided by the galvanizing process.

2.2.5 Accessibility

As a minimum provide access hatches over the following areas: parallel plates, oil storage compartments, Influent sampling area, effluent sampling area, oil skimmer, and weirs. Parts subject to wear or requiring adjustment, inspection, cleaning or repair shall be accessible and capable of convenient removal when required.

2.3 SEPARATION CHAMBER

Provide below ground separator to withstand hydraulic and soil loadings under static and dynamic conditions while empty and during operating conditions. Provide adequate support for additional loadings from separator appurtenances including weirs, hoppers, internal supports, parallel plate oil coalescers, equipment transportation, and rapid lowering and braking of load during handling operations. Bolt separator and accessories to weld-fabricated, structural steel skid base, or mount on manufacturer's standard base.

2.3.1 Lifting Mechanism

Fit separator with lifting lugs, straps, padeyes, supports for handling and

installation. Each lug, strap, padeye,. support shall carry the total dry weight of the separator and attendant appurtenances. Prominently display lifting instructions on plate located on outside of separator.

2.3.2 Flanges

Use only flat face flanges and drill 1,034 kPa ANSI Standard bolt circle and remove burrs. Use flanged piping connections that conform to ASME B16.5, Slip-on type.

2.3.3 Weirs

Attach stationary weirs and adjustable weir supports to separator side walls to provide a watertight seal between adjoining compartments and trough to prevent hydraulic short-circuiting. Use carbon steel for weir plates and baffles. Provide sharp crested weirs of size and section specified by manufacture. Provide slotted holes in weir plates and baffles or supports to permit horizontal and vertical adjustment of weir or baffle. Use nondeteriorating sealant or gaskets for mounting weir plates. Fill voids between separator wall and weir plate with sealant to make watertight.

2.3.4 Identification Plates

Provide anodized aluminum identification and instruction plates and stamp necessary data. Securely affix plates, in prominent location, to separator with nonferrous screws or bolts of not less than 3 mm in diameter.

2.3.5 Instruction Plates

Instruction plates shall describe special or required procedures to operate and service equipment, and shall include warnings of hazardous procedures and notice of safety and health requirements. Plates shall be durable and legible throughout equipment life.

2.3.6 Warning Sign

On entrances to the separator (and entrances to the vault) place a permanent sign which states the following: "DO NOT ENTER separator (OR VAULT) OR PERFORM HOT WORK ON OR IN separator UNTIL THE ATMOSPHERE HAS BEEN TESTED AND CERTIFIED GAS FREE AND SAFE."

2.4 INLET COMPARTMENT

Provide inlet compartment of sufficient volume to effectively reduce influent suspended and settleable solids and dissipate energy. Use inlet compartment that provides a minimum of 4.5 minutes detention ahead of the oil coalescing compartment. Provide nonclogging flow distributor and energy dissipator device and the primary solids collection hopper as specified in paragraph entitled "Reduction of Solids". Locate adjustable, primary surface oil overflow weir and sample ports as recommended by the manufacturer.

2.5 OIL SEPARATION COMPARTMENT

2.5.1 General

The maximum surface loading rate for the oil separation compartment shall be as recommended by manufacturer. The separator will also provide a minimum detention time within the oil separation compartment of 10 minutes

at design flow. Detention time will recomputed by calculating the volume of the separation zone within the separator and dividing this volume by the design flow rate.

2.5.2 Parallel Plates

Provide parallel plates at an angle from 0.70 to 1.05 rad with respect to longitudinal axis of the plate corrugations and space not less than 19 mm apart for removal of free oil and settleable solids. Configuration used shall not promote solids buildup on plates which would increase velocities to point of discharging an effluent of unacceptable quality. Maintain laminar flow at maximum design flow rate throughout plate packs including entrance and exit so as to prevent re-entrainment of oil(s) with water. Flow through plate packs shall be in a downflow mode parallel to plate corrugations or cross-flow perpendicular to plate corrugations, so that the oil collects and coalesces at high point of corrugations and rises to top of pack without clogging from oil or settleable solids. .

2.5.3 Supports

Brace and support individual plates or plate packs to withstand loads associated with transportation and operation of units, including inplace cleaning. Equip each plate pack with lifting lugs or other attachments for handling and installation. Each lug shall carry total weight of plate pack . Provide adequate structural supports to facilitate inplace cleaning of plate pack bundles.

2.5.4 Baffles

Provide oil retention baffle, adjustable surface oil overflow weir with trough, and stationary underflow baffle. Position underflow baffle to prevent resuspension of solids that have accumulated in secondary solids hopper.

2.6 OUTLET COMPARTMENT

Provide outlet compartment of manufacturer's recommended size, an adjustable overflow effluent weir, a sampling port, and nozzles.

2.7 ACCESSORIES AND ACCESSORY EQUIPMENT

Provide bolts, stiffeners, washers, nuts, screws, pins, gaskets, and fittings as required for adjustable weirs, separator covers and parallel plate packs. Provide separator covers with a vapor proof seal for vapor control with vents and suitable access manways to each separator compartment.

2.7.1 Hold Down Straps

100% Nylon webbing with reinforced end loops. Provide with wire rope, clamps, turnbuckles, and other hardware for anchoring tank.

Manufacter: Highland Tank, Nylon Hold Down Straps or equal.

2.7.2 Manholes

9.5 mm thick diamond steel plate covers with frame, 1.9 mm thick formed steel skirts, and steel channel anchors for concrete embedment. Covers shall have minimum H-20 load rating, and protective paint coating.

All manholes at ground level shall be capable of withstanding H-20 highway loading as defined by AASHTO HB-17.

Manufacturer: Fairfield Industries, Inc., Models 300HD, 360HD, and 7248/R or equal.

2.8 FABRICATION

Provide shop fabricated unit approved by the Contracting Officer, which is comprised of a separator containing an inlet compartment, parallel plate oil coalescing compartment, outlet compartment and the following accessories:

2.8.1 Shop Hydrostatic Test

Prior to applying coatings, perform hydrostatic test at atmospheric pressure by filling separator with water in the shop for a minimum of 4 hours. Testing shall be conducted after all seams have been cleaned and all welds have been inspected in accordance with ASTM E 165. Acceptance criteria, for the hydrostatic test, is no leakage after 4 hours using a thorough visual inspection for the leaks.

2.8.2 Reduction of Solids

Inlet compartment shall reduce suspended and settleable solids to nonclogging level for parallel plates and provide a uniform oily wastewater hydraulic loading across inlet face of oil coalescing compartment, under laminar flow conditions. Equip compartment with an inlet nozzle with wastewater sampling port, nonclogging flow distributor and energy dissipator device, primary solids collection hopper, primary solids outlet nozzle, oil retention weir, adjustable surface oil overflow weir with trough, primary oil outlet nozzles. The oil-water separator shall be preceded by a solid water basin which includes a removable solids or trash basket. Equip the solid water basin with a hoist for servicing the trash basket. Size the basket to retain all solids larger than 75 mm in any dimensions. The solid waste basin shall have a minimum storage volume of 945 liters (245 gallons).

2.8.3 Oil Coalescing Compartment

Equip oil coalescing compartment with easily removable and reinstallable, parallel, corrugated plates arranged to optimize separation of free oil from liquid carrier. Use parallel plates that are easily removable without dismantling packs and without confined space entry. Provide adjustable surface oil overflow weir with trough, oil outlet nozzle and stationary underflow baffle, oil retention baffle positioned to prevent discharge of free oil that has been separated from the carrier liquid in inlet and oil coalescing compartments. Provide access to each plate pack from top. Each bundle shall be equipped with handles or lifting rings. Plate designs that permit cleaning of plate packs in place are not acceptable.

2.8.4 Wastewater Sampling Port

Equip inlet and outlet compartments, adjustable overflow effluent weir, effluent trough, and wastewater outlet nozzle with wastewater sampling ports permitting easy access for obtaining isokinetic influent and effluent samples.

2.8.5 Connections

Connect the separator at the inlet and outlet pipe invert elevations indicated. Follow equipment manufacturer's recommendation for setting and adjusting top of weir elevations throughout unit.

2.8.6 Storage

Provide oil and suspended solids collection, storage, and transfer systems as an integral part of proposed oil-water separator system. As a minimum, the separator oil storage compartment shall have a capacity of not less than 10 percent of the total separator volume.

PART 3 EXECUTION

3.1 INSPECTION

Inspect each component of separator for compliance with requirements specified in PART 2 PRODUCTS. Redesign or modification of equipment to comply with specified requirements, or necessary redesign or modification following failure to meet specified requirements, shall receive particular attention for adequacy and suitability. This element of inspection shall encompass visual examinations and dimensional measurements.Noncompliance with specified requirements, or presence of one or more defects preventing or lessening maximum efficiency of separator operation, shall constitute cause for rejection.

3.2 INSTALLATION

Lift separator as required without parallel plate packs in place onto level foundation using lifting mechanism provided. Level separator and bolt to supports to prevent hydrostatic uplift and ensure unit stability. Use a lifting bar through lugs to insert plate packs into separator and place on supports. Caulk around packs and pack supports with sealing compound conforming to FS SS-S-210 or to MIL-S-45180 to prevent hydraulic short-circuiting. Avoid abrupt contact between the packs and the separator walls and pack supports to avoid damage. Separator system installation shall be conducted in accordance with manufacturer's recommendations.

3.3 FIELD QUALITY CONTROL

3.3.1 Field Hydrostatic Test

After separator has been leveled and secured to foundation and parallel plate packs are in place, level effluent overflow weir at elevation specified by manufacturer and hydrostatically test unit at atmospheric or operational pressure (for no leakage) for an additional 8 hours by filling with water. Perform the hydrostatic test prior to backfilling below ground or partially below ground installations.

3.3.2 Preoperational Test

The manufacturer's service representative shall inspect, operate, and test unit before in-service testing by the Contractor.

3.3.2.1 Tests

Tests shall include but not be limited to the following:

a. Soundness (without cracked or otherwise damaged parts).

b. Completeness in all details, as specified.

c. Correctness of setting, alignment, and relative arrangement of each component.

d. Verification of proper operation for all system components.

3.3.2.2 Preoperational Investigation and Test Report

Submit preoperational test report. Document inspections, operations, adjustments, and tests performed and indicate whether they were acceptable or not. For unacceptable items, describe corrective action taken or recommended. Include detailed descriptions of points inspected, tests and adjustments made, quantitative results obtained if such are specified, and suggestions for precautions to be taken to ensure proper maintenance. Include the manufacturer's certificate that equipment conforms to specified requirements and is ready for permanent operation and that nothing in installation will render manufacturer's warranty null and void.

3.3.3 In-Service Test

After hydrostatic test and preoperational test have been successfully completed and unit has been properly connected to influent and effluent piping, allow influent oil-in-water mixture previously described in paragraph entitled "SYSTEM DESCRIPTION" to flow into separator filled with water. Adjust and level primary and secondary surface oil overflow weirs to optimize oil skimming and minimize water overflow to oil recovery. Optimize operation of unit within 5 working days.

-- End of Section --

SECTION 11400

FOOD SERVICE EQUIPMENT

PART 1 GENERAL

1.1 REFERENCES

The publications listed below form a part of this specification to the extent referenced. The publications are referred to in the text by basic designation only.

ASTM INTERNATIONAL (ASTM)

ASTM A 123/A 123M	(2001) Zinc (Hot-Dip Galvanized) Coatings on Iron and Steel Products
ASTM A 167	(1999) Stainless and Heat-Resisting Chromium-Nickel Steel Plate, Sheet, and Strip
ASTM A 240/A 240M	(2000) Heat-Resisting Chromium and Chromium-Nickel Stainless Steel Plate, Sheet, and Strip for Pressure Vessels
ASTM A 269	(2000) Seamless and Welded Austenitic Stainless Steel Tubing for General Service
ASTM D 520	(2000) Zinc Dust Pigment

AMERICAN WELDING SOCIETY (AWS)

AWS A5.8	(1992) Filler Metals for Brazing and Braze Welding

NSF INTERNATIONAL (NSF)

NSF 2	(1996) Food Equipment

SHEET METAL AND AIR CONDITIONING CONTRACTORS' NATIONAL ASSOCIATION (SMACNA)

SMACNA HVAC Duct Const Stds	(1995; Addenda Nov 1997) HVAC Duct Construction Standards - Metal and Flexible

1.2 GENERAL REQUIREMENTS

Food service equipment shall be of the sizes listed in this section and the types shown. Equipment, materials, and fixtures required for use in conjunction with the items to be furnished by the Government shall be furnished and installed by the Contractor. Equipment, materials, and fixtures indicated on the drawings and schedules shown as Contractor furnished and installed, shall be furnished and installed by the Contractor.

1.2.1 Mechanical, Electrical, and Plumbing Work

Plumbing systems, including final connections, shall be in accordance with Section 15400 PLUMBING, GENERAL PURPOSE. Duct work and accessories shall be in accordance with Section 15895 AIR SUPPLY, DISTRIBUTION, VENTILATION, AND EXHAUST SYSTEM. Painting shall be in accordance with Section 09900 PAINTS AND COATINGS. Air-conditioning systems shall be in accordance with Section 15700 UNITARY HEATING AND COOLING EQUIPMENT.

1.2.2 Sanitation Standards

Food service equipment shall meet the requirements set forth by the National Sanitation Foundation (NSF) sanitation standards.

1.2.3 Verification of Dimensions and Coordination of Project Data

The Contractor shall become familiar with all details of the work and shall advise the Contracting Officer of any discrepancy before performing any work. The Contractor shall perform the following:

a. Horizontal and vertical dimensions shall be field verified.

b. Contract drawings and submittal data shall be reviewed for accuracy and completeness.

c. The installed utility capacity and location shall be field checked.

d. Critical systems/components shall be reviewed for application and capacities such as for exhaust hoods, refrigeration systems, fire suppression systems, gas, water, and steam/condensate line sizes and manifold configurations.

e. Delivery shall be coordinated for access through finished openings and vertical handling limitation within the building.

1.2.4 Standard Products

Materials and equipment shall be the standard products of manufacturer regularly engaged in the manufacture of the products and shall essentially duplicate items that have been in satisfactory use for at least 2 years prior to bid opening. The experience used shall include applications of equipment and materials under similar circumstances and of similar size. When two or more of the same products are supplied they shall be products of one manufacturer. Equipment shall be supported by a service organization that is, in the opinion of the Contracting Officer, reasonably convenient to the site.

1.2.5 Nameplates

Each item of equipment shall bear a stainless steel, aluminum, or engraved polyester nameplate, as standard with the manufacturer, located in a conspicuous position and permanently fastened to the equipment. Name or identification plates shall be of the size standard with the manufacturer for the particular piece of equipment provided. Name plates shall reflect the name of the manufacturer/trade name, serial number, make, and model number, pertinent ratings, operating characteristics, and other information as standard with the manufacturer, date of manufacture, electrical characteristics, and other applicable data, such as flow rate, temperature, pressure, capacity, and material of construction. Separate equipment

identification plates with the contract number marked thereon, shall be securely fastened to the surface of each piece of equipment.

1.3 SUBMITTALS

Government approval is required for submittals with a "G" designation; submittals not having a "G" designation are for information only. When used, a designation following the "G" designation identifies the office that will review the submittal for the Government. Submit the following in accordance with Section 01330 SUBMITTAL PROCEDURES:

SD-03 Product Data

Table and Shelves

1.4 DELIVERY AND STORAGE

1.4.1 Delivery

Unless otherwise directed, the following procedures shall apply:

a. Field assembled fixed equipment integrated into structure shall be sent to jobsite when required.

b. Fixed equipment not integrated into structure shall be sent to the jobsite after completion of finished ceilings, lighting, and acidizing of the finished floor and wall systems, including painting.

c. Major movable equipment shall be delivered to inventory in a secured area for interim jobsite storage, or if secured area is not available, when fixed equipment installation/clean-up has been completed.

1.4.2 Storage

Items delivered and placed into storage shall be stored with protection from weather, humidity, and temperature variation, dirt and dust, or other contaminants.

1.4.3 Protection of Fixed/Fabricated Manufactured Equipment

Fiberboard or plywood shall be taped to surfaces as required by equipment shape and installation access requirements.

1.4.4 Prohibited Use of Equipment

Food service equipment shall not be used as tool and material storage, work bench, scaffold, or stacking area.

1.4.5 Damaged Equipment

Contractor shall immediately submit documentation to the Contracting Officer with a recommendation of action for repair or replacement and the impact on project schedule.

PART 2 PRODUCTS

2.1 MATERIALS

Materials shall conform to the following:

2.1.1 Stainless Steel, Nonmagnetic

ASTM A 167 or ASTM A 240/A 240M: 18-8, 300 Series, austenitic, polished to No. 3 or 4 finish on exposed surfaces.

2.1.2 Stainless Steel Pipe and Tubing

ASTM A 269. Pipe and tubing shall be seamless or welded, of the gauge specified, of true roundness, and of material as specified for stainless steel. Seamless tubing shall be thoroughly annealed, pickled, and ground smooth. Welded tubing shall be thoroughly heat-treated, quenched to eliminate carbide precipitation and then drawn true to size and roundness, and ground. Tubing shall be given a No. 3 or 4 finish when exposed to view.

2.1.3 Galvanizing Repair Compound

Pigment per ASTM D 520.

2.1.4 Brazing Material

Class shall be as applicable per AWS A5.8.

2.1.5 Steel Structural Shapes for Framing

Structural shapes shall be uniform, ductile in quality, and shall be free of hard spots, runs, checks, cracks and other surface defects. Sections shall be galvanized by the hot-dip process, conforming to ASTM A 123/A 123M.

2.1.6 Coatings

Coatings shall be of a durable, nontoxic, nondusting, nonflaking, and mildew-resistant type, suitable for use with food service equipment and in conformance with NSF 2. Application shall be in accordance with the recommendations of the manufacturer.

2.1.6.1 Exterior Parts

Exterior, galvanized parts, exposed members of framework, and wrought steel pipe, where specified to be painted, shall be cleaned, and free of foreign matter before applying a rust inhibiting prime and two coats of epoxy-based paint in accordance with Section 09900 PAINTS AND COATINGS, unless otherwise specified. Color shall be selected by the Contracting Officer from manufacturer's standard colors.

> Items where color, pattern, or fabric are be selected by Contracting Officer from manufacturer's full range shall have choices submitted to Contracting Officer simultaneously with other items requiring finish selection.

2.1.6.2 Solder Material

Manufacturer's recommended material.

2.2 WORK SURFACES

Work surfaces shall be constructed in accordance with applicable portions of NSF 2.

2.2.1 Stainless Steel

Work surfaces shall be constructed of 1.9 mm (14 gauge) stainless steel with all seams and corners welded, ground smooth, and polished. Countertops may be constructed of 1.6 mm (16 gauge) stainless steel.

2.2.2 Marble

Work surfaces shall be constructed of 40 mm thick marble.

2.2.3 Pitch and Drainage of Equipment Surfaces

Wherever a fixture has a waste or drain outlet, the surface shall have a distinct pitch toward such outlet.

2.3 COUNTER BASES

2.3.1 Legs

Legs shall be of 1.6 mm (16 gauge), stainless steel 3 cm diameter tubing or 1.2 mm (18 gauge) 4 cm square tubing.

2.3.2 Feet

Feet for stationary equipment shall be hard plastic and shall provide for height adjustment.

2.3.3 Wheels

12.5 cm diameter lockable swivel rolling casters shall be provided on 8 sets of the stainless steel open slotted/perforated shelves

2.3.4 Shelving

2.3.4.1 Shelves

Shelves shall be constructed of 1.9 mm (14 gauge) open slotted/perforated stainless steel with all edges turned down with a tight hem at bottom. Corners shall be notched and welded from underside to completely fill the gap, ground and polished. Eash set of shelves shall be 100 cm wide×50cm deep×1.8m high, 4 tier with 3 cm adjustable stainless steel legs.

2.4 SINKS

Sinks shall be constructed of stainless steel.

2.5 EXHAUST HOODS OVER COOKING EQUIPMENT

Hoods shall conform to SMACNA HVAC Duct Const Stds. Ducts and hoods shall be secured to building so as to be level and free from vibration under all conditions of operations.

2.5.1 Hood Support

Wall mounted or island type hoods shall be supported from the structure with stainless steel mounting brackets.

2.5.2 Filter Type Hoods

2.5.2.1 Grease Filters

Grease filters shall be in accordance with manufacturer's recommendations. Filters shall remove heat, odor, smoke, residue, and grease vapors from the exhaust of the applicable cooking process. Filter design shall result in optimum air velocity for the removal of residues and grease. Construction shall be aluminum.

2.6 DRAIN TRENCH LINER/GRATING

Drain trench liner/grating shall be of cast iron construction with galvanized body and chromium plated bronze, nickel-bronze, or nickel brass strainer or of 1.2 mm (18 gauge) stainless steel in sizes as indicated with a perimeter shoulder at the top, turned up flush and level with finished floor, tight-hemmed back down to the shoulder level and flanged out for attachment to the slab.

2.7 KITCHEN EQUIPMENT

All kitchen equipment listed herein shall be UL and NSF listed.

2.7.1 Dual Tray & Silverware Dispenser

Self-leveling mobile tray and silver dispenser shall hold two stacks of 150 trays. Minimum features:

14-3/8" x 18-3/4" Maximum size trays
Storage capacity of 150 trays per stack for 2 stacks (300 total)
Self-lubricating delrin wheels with locks
Self-leveling mechanism lifts out for easy cleaning
Field adjustable to accommodate different weights
Removable stainless steel carrier tray provides bottom support for trays being dispensed
Base fabricated from stainless steel and reinforced with stainless steel angles
Tubular frames fabricated from stainless steel tubing securely welded to stainless steel angles on underside of base
Frames reinforced by horizontal stainless steel rods welded to each vertical frame
Top-mounted stainless steel silverware holder includes plastic silverware cylinders
Non-marking bumper attached at each corner
Four 4" heavy-duty non-marking swivel casters

Dimensions: 22" L x 37" W (559mm L x 940mm W)

2.7.2 Dual Plate Dispenser

Minimum features:

Frames constructed of all welded 1" O.D. 16 ga. stainless steel tubing, welded to 16 ga. stainless steel shelves - turned down, hemmed and notched

to mate with the uprights
Adjustable, drop-in dish dispensers
Units mounted on four, 4'' diameter heavy duty, double ball bearing swivel casters with non-marking rubber tires

Dimensions: 30" L x 17" W (762mm L x 432mm W)

2.7.3 Iced Tea Brewer and Dispenser

Iced tea brewer shall be electric and constructed of stainless steel. Tea shall be brewed directly into a stainless steel dispenser. Brewer and dispenser shall be a matched pair produced by a single manufacturer. Minimum features:

Brewing capacity of 26.7 gal. (101 liters) /hr based upon incoming water temp of 60?F/15?C (140?F/60?C rise) per 1.9 liter (1/2 gallon) brew time of 4 minutes.
Dispenser capacity of 3 gal (11.4 liters)

Dimensions: 34" H x 11.6" W x 22.4"D (86.4cm H x 29.5cm W x 58.4cm D).

2.7.4 Coffee Brewer and Dispenser

Coffee brewer shall be urn type combined brewer and dispenser. Coffee brewer shall be electric, constructed of stainless steel with coffee and hot water serving outlets. Minimum features:

Brewing capacity of 11.4 gal. (43.2 liters) /hr based upon incoming water temp of 60?F/15?C (140?F/60?C rise)
Water tank capacity of 10 gallons (37.9 liters)
Dispenser capacity of 3 gal (11.4 liters)

Dimensions: 34" H x 11.6" W x 22.4"D (86.4cm H x 29.5cm W x 58.4cm D).

2.7.5 Cold Food Counter

Cold food counter shall provide mechanical refrigeration for a total of six (6) 12"x20" pans. Minimum features:

14-gauge stainless steel top with 1-1/2" turndown on all sides
Top secured by recessed bolts
14-gauge stainless steel legs fastened to 18-gauge stainless steel bottom shelf
20-gauge stainless steel end and front panels are attached to legs
20-gauge stainless steel fully welded 5" deep well with drain
Well is enclosed with insulation on sides, end and bottom
1" drain with ¾" FPT shut off valve
Open control side for additional storage capacity
Sliding doors
Louvered panels for ventilation of condensing unit
End louver panel removable to access compressor
5" diameter swivel plate casters, 2 with brakes
Eight foot electrical cord
On/Off switch and pilot light mounted on control panel of unit's operator side
Buffet single side protector guard with fluorescent lights

Dimensions: 88" L x 28" W x 36" H (2235mm L x 711mm x 914mm)

2.7.6 Hot Food Counter

Hot food counter shall provide electrical heating for a total of six (6) wells. Minimum features:

14-gauge stainless steel top with 1-1/2" turndown on all sides
Top secured by recessed bolts for easy access
14-gauge stainless steel legs fastened to 18-gauge stainless steel bottom shelf, open control side
Open control side for additional storage capacity
20-gauge stainless steel end and front panels are attached to legs
20-gauge stainless steel bottom-mounted wells, 6-1/2" deep with coved corners
2" insulation on sides and between wells, 1-1/2" on bottom, 1" on the ends and 1/4" fiber insulation all around
1000 watt tubular heating element for each well which is individually and thermostatically controlled
Wells can be run wet or dry
5" diameter swivel plate casters, 2 with brakes
3/4" drain with ¾" FPT shut off valve
Eight foot electrical cord
On/Off switch and pilot light mounted on control panel of unit's operator side
Buffet single side protector guard with fluorescent lights

Dimensions: 88" L x 28" W x 36" H (2235mm L x 711mm x 914mm)

2.7.7 Electric Griddle

Griddle shall be electric-heated unit, with a hermetically-sealed vacuum chamber that produces steam and heats the 8-gauge stainless steel griddle plate. Efficient steam heat transfer provides 200-400°F (93-204°C) operating temperature range and uniform griddle surface temperatures of ±3°F (±1°C). Griddle fabricated from cold-rolled stainless steel with 4.5" high back splash, sides that taper from 4.5" to 1.7", a 4" wide by 1" deep full front grease trough and 11?2-2 gallon grease drawer. 36" cooking surface height. Minimum features:

Power-On switch & indicator light
Heating indicator light
200-400°F (93-204°C) solid state thermostat
Easy front service access to controls

Dimensions: 48" W x 29" D (1219mm W x 734mm D)

2.7.8 Beverage Refrigerator

Beverage refrigerator shall have two glass, self-closing, sliding doors. Refrigeration system shall use R-134a refrigerant. Minimum features:

Refrigeration system capable of 33°F to 38°F (.5°C to 3.3°C) cooler temperatures
Exterior of laminated vinyl
Interior liner with 300 series stainless steel floor
Self closing doors with counterbalanced weight system
"Low-E", double pane thermal glass door assemblies
Entire cabinet structure foamed-in-place using high density, CFC free, polyurethane insulation
Easily accessible condenser coil for cleaning

Eight (8) adjustable, heavy duty PVC coated wire shelves 22.9"L x 20.6"D (583mm x 523mm)
Safety shielded fluorescent interior lighting
Cabinet lighting utilizes electronic ballast and T-8 bulbs for brighter illumination, longer bulb life and increased energy efficiency
Epoxy coated evaporator
Bottom mounted condensing unit

Dimensions: 51.1" W x 29.6" D x 78.6" H (1299mm W x 753mm D x 1998mm H)

2.7.9 Reach-In Single Door Refrigerator

Refrigerator shall have a single, hinged door. Refrigeration system shall use R-134a refrigerant. Minimum features:

Refrigeration system capable of 33°F to 38°F (0.5°C to 3.3°C) cooler temperatures
Exterior shall have 300 series stainless steel front with anodized aluminum exterior ends, back and top
Interior shall be NSF-7 compliant, white aluminum liner with 300 series stainless floor (with coved corners)
Entire cabinet structure foamed-in-place using high density, CFC free, polyurethane insulation
Welded, heavy duty galvanized base rail with corrosion protection and leg levelers
Door shall extend full width of cabinet shell and be constructed of 300 series stainless steel exterior with white aluminum liner to match cabinet interior
Provide lifetime guaranteed 12" (305mm) long recessed handle that is foamed in-place with a sheet metal interlock
Door shall be positive seal, self-closing type with lifetime guaranteed door hinges and torsion type closure system with locks
Door gasket shall be magnetic, of one piece construction, removable without tools for ease of cleaning.
Interior shall contain three (3) adjustable, heavy duty PVC coated wire shelves 20-13/16"L x 17"D (529mm x 432mm)
Shelf support pilasters made of same material as cabinet interior; shelves are adjustable on 1/2" (13mm) increments
Interior lighting shall be incandescent with safety shield, activated by rocker switch mounted below door
Epoxy coated evaporator
Bottom mounted condensing unit

Dimensions: 24.8" W x 23.1" D x 64" H (631mm W x 585mm D x 1626mm H)

2.7.10 Reach-In Three Door Refrigerator

Refrigerator shall have three hinged doors. Refrigeration system shall use R-134a refrigerant. Minimum features:

Refrigeration system capable of 33°F to 38°F (0.5°C to 3.3°C) cooler temperatures
Exterior shall have 300 series stainless steel front with anodized aluminum exterior ends, back and top
Interior shall be NSF-7 compliant, white aluminum liner with 300 series stainless floor (with coved corners)
Entire cabinet structure foamed-in-place using high density, CFC free, polyurethane insulation
Welded, heavy duty galvanized base rail with corrosion protection and 6"

(153mm) seismic/flanged legs
Door shall extend full width of cabinet shell and be constructed of 300 series stainless steel exterior with white aluminum liner to match cabinet interior
Provide lifetime guaranteed 12" (305mm) long recessed handle that is foamed in-place with a sheet metal interlock
Door shall be positive seal, self-closing type with lifetime guaranteed door hinges and torsion type closure system with locks
Door gasket shall be magnetic, of one piece construction, removable without tools for ease of cleaning
Interior compartments shall contain three (3) adjustable, heavy duty PVC coated wire shelves 24-1/8" L x 22-3/8" D (613mm x 569mm)
Shelf support pilasters made of same material as cabinet interior; shelves are adjustable on 1/2" (13mm) increments
Interior lighting shall be incandescent with safety shield, activated by rocker switch mounted below door
Epoxy coated evaporator
Bottom mounted condensing unit

Dimensions: 78-1/8" W x 29-1/2" D x 84-1/16" H (1985mm W x 750mm D x 2136mm H)

2.7.11 Reach-In Two Door Freezer

Freezer shall have two hinged doors. Refrigeration system shall use R-404a refrigerant. Minimum features:

Refrigeration system capable of -10°F (-23.3°C) freezer temperatures
External digital temperature monitor
Exterior shall have 300 series stainless steel front with anodized aluminum exterior ends, back and top
Interior shall be NSF-7 compliant, white aluminum liner with 300 series stainless floor (with coved corners)
Entire cabinet structure foamed-in-place using high density, CFC free, polyurethane insulation
Welded, heavy duty galvanized base rail with corrosion protection and 6" (153mm) seismic/flanged legs
Door shall extend full width of cabinet shell and be constructed of 300 series stainless steel exterior with white aluminum liner to match cabinet interior
Provide lifetime guaranteed 12" (305mm) long recessed handle that is foamed in-place with a sheet metal interlock
Door shall be positive seal, self-closing type with lifetime guaranteed door hinges and torsion type closure system with locks
Door gasket shall be magnetic, of one piece construction, removable without tools for ease of cleaning
Interior compartments shall contain three (3) adjustable, heavy duty PVC coated wire shelves 24-9/16" L x 22-3/8" D (624mm x 569mm)
Shelf support pilasters made of same material as cabinet interior; shelves are adjustable on 1/2" (13mm) increments
Interior lighting shall be incandescent with safety shield, activated by rocker switch mounted below door
Epoxy coated evaporator
Bottom mounted condensing unit

Dimensions: 54-1/8" W x 29-1/2" D x 83-5/16" H (1375mm W x 750mm D x 2117mm H)

2.7.12 Ice Machine

Ice machine shall be self-contained air-cooled unit with bin located on top of unit accessible through uplifting swing door. Unit shall be certified in accordance with ARI 820. Minimum features:

Cleanable condenser air filter
Cube size of 7/8" x 7/8" x 7/8" (19mm x 19mm x 19mm)
52 lbs (24 kgs) of ice cube production over a 24 hour period at a water temperature of 52 deg F (24 deg C) and an air temperature of 90 deg F (32 deg C)
Unit drain
Adjustable legs
Internal insulation

Dimensions: 19.7" W x 22.3" D x 36" H (500mm W x 567mm D x 914mm H)

2.7.13 Double-Basket Electric Fryer

Fryer shall be double-basket, electric type and shall have immersion type heating elements with high temperature alloy stainless steel sheath. Fryer shall have high input elements and oil filtration system. Fryer temperature control shall consist of a solid state thermostat with melt cycle. Fryer shall have a deep cool zone; minimum 20% of total oil capacity to trap burnt particles, crumbs and black specs. Minimum features:

Welded tank with an extra smooth peened finish
Stainless steel front, door, side panels, and splashback
Heavy duty 3/16" (48mm) door hinge.
Digital controller which maintains the fryer temperature between 250°F (122°C) and 380°F (193°C)
Digital controller with built-in melt cycle and boil-out capability
Temperature limit switch safely shuts off the fryer if the oil temperature exceeds the upper limit.
Drain valve interlock switch shuts disables the fryer if the drain is opened preventing accidental fires
Filter system on self aligning roller-less guides
Filter media
1-1/4" NPT drain valve for quick draining on both full and twin tanks
Filter piping integrated into the fryer
3" drain manifold
Clean out rod and cleaning brush
Adjustable legs

Dimensions: 31-1/4" W x 34-3/8" D x 48-15/32" H (1230mm W x 873mm D x 1231mm H)

2.7.14 Flat Top Electric Range

Range shall be electric, medium duty, with full size, all porcelain oven interior, contoured front stainless steel plate rail. Minimum features:

36" (914mm) wide with 36" griddle top
Griddle shall be 5/8" (16mm) thick and thermostatically controlled
1 large, full-size oven with complete porcelain interior finish
Chrome plated, 4-position, removable rack guides with one oven rack
Electro-mechanical heavy duty oven thermostat (150°F/66°C - 550°F/288°C)
Heating elements for small pot work, infinite switch controlled
Stainless steel exterior with stainless steel 10" (254 mm) high backguard

with slotted black enameled angled cap
Heat resistant, cool touch oven door handle

Dimensions: 36" W x 31-1/4" D x 40-7/8" H (914mm W x 794mm D x 1038mm H)

2.7.15 Electric Range

Range shall be electric, medium duty, with full size, all porcelain oven interior, contoured front stainless steel plate rail. Minimum features:

36" (914mm) wide with 6 all purpose sealed heating elements
1 large, full-size oven with complete porcelain interior finish
Chrome plated, 4-position, removable rack guides with one oven rack
Electro-mechanical heavy duty oven thermostat (150°F/66°C - 550°F/288°C)
Heating elements for small pot work, infinite switch controlled
Stainless steel exterior with stainless steel 10" (254 mm) high backguard
with slotted black enameled angled cap
Heat resistant, cool touch oven door handle

Dimensions: 36" W x 31-1/4" D x 40-7/8" H (914mm W x 794mm D x 1038mm H)

PART 3 EXECUTION

3.1 INSTALLATION

Equipment shall be installed at locations shown in accordance with the manufacturer's written instructions. The Contractor shall make provision for the plumbing, heating, and electrical connections and for equipment indicated as being furnished and installed by the Government.

3.2 TESTING

Equipment shall be inspected and tested under operating conditions after installation. If inspection or test shows defects, such defects shall be corrected, and inspection and test shall be repeated.

-- End of Section --

SECTION 11405

PREFABRICATED WALK-IN REFRIGERATORS AND COOLERS

PART 1 GENERAL

1.1 REFERENCES

The publications listed below form a part of this specification to the extent referenced. The publications are referred to in the text by basic designation only.

AIR CONDITIONING AND REFRIGERATION INSTITUTE (ARI)

ARI 365	(1994) Commercial and Industrial Unitary Air-Conditioning Condensing Units
ARI 420	(1995) Unit Coolers for Refrigeration

ASTM INTERNATIONAL (ASTM)

ASTM B 280	(1999) Seamless Copper Tube for Air Conditioning and Refrigeration Field Service
ASTM D 520	(2000) Zinc Dust Pigment

AMERICAN WELDING SOCIETY (AWS)

AWS A5.8	(1992) Filler Metals for Brazing and Braze Welding

NATIONAL FIRE PROTECTION ASSOCIATION (NFPA)

NFPA 70	(2005) National Electrical Code

NSF INTERNATIONAL (NSF)

NSF 7	(1999) Commercial Refrigerators and Storage Freezers

UNDERWRITERS LABORATORIES (UL)

UL 207	(1993; Rev thru Oct 1997) Refrigerant-Containing Components and Accessories, Nonelectrical
UL 303	(1987; R 1995, Bul. 1997) Refrigeration and Air-Conditioning Condensing and Compressor Units
UL 412	(1993; R 1996, Bul. 1997) Refrigeration Unit Coolers
UL 471	(1995; Rev thru Apr 1998) Commercial Refrigerators and Freezers

UL Elec Equip Dir	(1999) Electrical Appliance and Utilization Equipment Directory

1.2 GENERAL REQUIREMENTS

Food service equipment shall be of the sizes and types shown. Equipment, materials, and fixtures required for use in conjunction with the items to be furnished by the Government shall be furnished and installed by the Contractor. Equipment, materials, and fixtures indicated on the drawings and schedules shown as Contractor furnished and installed, shall be furnished and installed by the Contractor. Refrigeration systems shall be remote type. Provide security fence or wall to protect outside refrigeration units.

1.2.1 Mechanical, Electrical, and Plumbing Work

Plumbing systems, including final connections, shall be in accordance with Section 15400 PLUMBING, GENERAL PURPOSE. Electrical equipment, motors, wiring, and final connections shall be in accordance with Section 16402 INTERIOR DISTRIBUTION SYSTEM. Painting shall be in accordance with Section 09900 PAINTS AND COATINGS.

1.2.2 Verification of Dimensions and Coordination of Project Data

The Contractor shall become familiar with all details of the work and shall advise the Contracting Officer of any discrepancy before performing any work. The Contractor shall perform the following:

a. Horizontal and vertical dimensions shall be field verified.

b. Contract drawings and submittal data shall be reviewed for accuracy and completeness.

c. The installed utility capacity and location shall be field checked.

d. Critical systems/components shall be reviewed for application and capacities such as for, refrigeration systems, AND condensate line sizes .

e. Delivery shall be coordinated for access through finished openings and vertical handling limitation within the building.

1.2.3 Standard Products

Materials and equipment shall be the standard products of manufacturer regularly engaged in the manufacture of the products and shall essentially duplicate items that have been in satisfactory use for at least 2 years prior to bid opening. The experience used shall include applications of equipment and materials under similar circumstances and of similar size. When two or more of the same products are supplied they shall be products of one manufacturer. Equipment shall be supported by a service organization that is, in the opinion of the Contracting Officer, reasonably convenient to the site.

1.2.4 Underwriters Laboratories Standards

Electrically operated equipment shall be in accordance with applicable standards such as UL 412 and UL 303. Evidence of meeting the requirements

shall be a UL label on the equipment, a UL listing mark per UL Elec Equip Dir, or I.E.C. standards or a certified test report from a nationally recognized independent testing laboratory indicating that the specific food service equipment has been tested and conforms to the applicable UL standards.

1.3 SUBMITTALS

Government approval is required for submittals with a "G" designation; submittals not having a "G" designation are for information only. When used, a designation following the "G" designation identifies the office that will review the submittal for the Government. Submit the following in accordance with Section 01330 SUBMITTAL PROCEDURES:

SD-03 Product Data

Food Service Equipment

Manufacturer's descriptive and technical literature, performance charts and curves, catalog cuts, and installation instructions. Brochures shall have front and rear protective covers with labeled project name and include an index indicating item number, quantity, description, and manufacturer, a fly sheet for each component indicating item number, name, quantity, manufacturer, optional equipment, modification, special instruction, and utility requirements, and catalog specifications sheets.

Data consisting of a complete list of equipment and materials. Detail drawings showing complete wiring, piping, and schematic diagrams, and any other details required to demonstrate that the system has been coordinated and will properly function as a unit. Drawings shall show proposed layout and anchorage of equipment and appurtenances, and equipment relationship to other parts of the work, including clearances for maintenance and operation.

Detail drawings by the Contractor that show the size, type, and location of equipment drain lines, and floor drains. Drawings shall indicate drain lines from equipment, distances of drain lines and floor drain receptacles from equipment and aisles, and elevation views of drain piping and floor drains.

1.4 DELIVERY AND STORAGE

1.4.1 Delivery

Unless otherwise directed, the following procedures shall apply:

a. Field assembled fixed equipment integrated into structure shall be sent to jobsite when required.

b. Fixed equipment not integrated into structure shall be sent to the jobsite after completion of finished ceilings, lighting, and acidizing of the finished floor and wall systems, including painting.

c. Major movable equipment shall be delivered to inventory in a secured area for interim jobsite storage, or if secured area is not available, when fixed equipment installation/clean-up has been

completed.

d. Minor appliances and loose items shall be delivered to the jobsite when the Contracting Officer is prepared to receive and inventory such items.

1.4.2 Storage

Items delivered and placed into storage shall be stored with protection from weather, humidity, and temperature variation, dirt and dust, or other contaminants.

1.4.3 Protection of Fixed/Fabricated Manufactured Equipment

Fiberboard or plywood shall be taped to surfaces as required by equipment shape and installation access requirements.

1.4.4 Prohibited Use of Equipment

Food service equipment shall not be used as tool and material storage, work bench, scaffold, or stacking area.

1.4.5 Damaged Equipment

Contractor shall immediately submit documentation to the Contracting Officer with a recommendation of action for repair or replacement and the impact on project schedule.

PART 2 PRODUCTS

2.1 MATERIALS

2.1.1 Refrigeration Pipe and Tubing

Refrigeration piping shall be annealed or hard drawn seamless copper tubing in conformance with ASTM B 280.

2.1.2 Galvanizing Repair Compound

ASTM D 520, Type I pigment.

2.1.3 Brazing Material

AWS A5.8, class shall be as applicable.

2.1.4 Steel Structural Shapes for Framing

As per manufacturer's recommendations.

2.1.5 Coatings

Coatings shall be of a durable, nontoxic, nondusting, nonflaking, and mildew-resistant type, suitable for use with food service equipment. Application shall be in accordance with the recommendations of the manufacturer.

2.2 PREFABRICATED WALK-IN REFRIGERATORS AND COOLERS

Refrigerators and coolers shall be prefabricated, commercial, walk-in type

suitable for the intended use. Mercury shall not be used in thermometers. Units shall conform to UL 207, UL 471, and NSF 7 floor panel design type and size as indicated, and the following:

2.2.1 Panel Construction

Interchangeable, thickness as standard with manufacturer, filled with insulation. Provide preformed corner units. Panels to have profiles edges with extruded polyethylene gaskets to assure air and vapor tight joints. Provide panels with fasteners around perimeter edges.

a. Insulation: Foamed-in-place (non-CFC) polyurethane with "K" factor of 0.336W/m2K and density of not less than 40 kg per cu meter.

b. Finish: PVC-coated, galvanized steel sheet.

2.2.2 Miscellaneous Requirements

2.2.2.1 Closure Panels

Closure panels and/or trim strips to the building walls and ceiling shall be installed with concealed attachments. Closure/trim shall be of the same material as the wall panels unless otherwise noted.

2.2.2.2 I-Beam Supports

Wherever compartment dimension exceeds the clear-span ability of ceiling panels, I-beam supports shall be provided on the exterior of the ceiling or supported by spline-hangers. Thirteen millimeter diameter steel rods shall be installed through beam/hangers and secured to the structure above. Beams or posts within compartments will not be acceptable.

2.2.2.3 Cold Room Doors

Doors shall be filled with insulation. Hardware shall be steel. Provide door latch with key lock and with internal safety-release handle.

2.2.2.4 Self Service Units (Doors and Shelves)

Door panels shall be insulated glass doors, sizes and locations as indicated on Drawings. Cast metal supports shall be positioned behind glass doors inside of cold room to allow storage and display of goods through self service doors. Doors shall be double glazed with safety glass and an airspace. Self serve structure shall contain appropriate lighting and be pre-wired with condensers and starter. Interior grille-type shelves shall be adjustable for height and inclination, and made of galvanized steel, plastic-coated for foods; shelving supports shall be galvanized steel with a factory applied epoxy-polyester powder coated finish.

2.2.2.5 Door Stops

Door stops shall be provided, where necessary, to prevent walk-in doors from striking adjacent walls, plumbing fixtures or food service equipment when door is open.

2.2.2.6 Gasket

Gasket material shall be either natural or synthetic rubber and conform to DIN, BS, or EN standards. Where frames are used, the panels shall fit

together with gaskets that are designed for 50 percent compression.

2.2.2.7 Alarm System

An alarm system shall be provided consisting of a controller, pilot and warning lights, and audible alarm as specified by the manufacturer. The controller shall be equipped with normally-open and normally-closed contacts for remote monitoring of the temperature warning alarms and the power-off conditions.

2.2.2.8 Recording Thermometer

A 7-day, high/low temperature data recorder with battery backup power,complete with manufacturer's standard sensors/thermocouples, wiring, and other accessory components.

2.2.3 Floor

2.2.3.1 Prefabricated Floor Panels

Prefabricated floor panels shall be of the same construction as wall/ceiling except with plastified galvanized finish, 0.7 mm slip-resistant finish. Prefabricated floor panels which are recessed, shall have sloping interior floor ramps at exterior entrance doors. Two sets of erection tools, compatible with fasteners, shall be furnished with each unit.

2.2.4 Refrigeration Equipment

Refrigeration equipment shall be designed for remote installation. Design units for 16 to 18 hour operation at the indicated interior temperature in -18 degree C ambient temperature. Capacities, air delivery, and dimensions shall be as indicated. Remote condensing units shall be factory fabricated and rated in accordance with UL 303 and ARI 365. Provide motor, air-cooled condenser, receiver, and compressors, all mounted on a common base. Compressors shall be hermetic type. Evaporators shall be factory fabricated and rated in accordance with UL 412 and ARI 420. Forced convection, unit cooler type, made to suspend from the ceiling panels, with forced air discharged parallel to ceiling. Provide with air circulating motor, multifin tube type coil, and grille assembled within a protective housing. Air circulation motors shall be lifetime sealed, and the entire unit-cooler assembly shall be accessible for cleaning. Provide a drip pan and drain connection. When the cold storage room is used for freezing, provide an automatic mechanism to accomplish this.

2.3 UTILITY DISTRIBUTION SYSTEMS

Utility distribution systems shall be UL listed and conform to NFPA 70. Systems shall be prewired and preplumbed to one final connection point. Systems shall include an electrical distribution assembly and a mechanical manifold assembly as indicated. Systems shall be provided with removable 1.6 mm (16 gauge) stainless steel panels for ease of access. Systems shall be provided with floor mounting pedestals with vertical extensions for overhead service connections.

2.3.1 Electrical Distribution Assembly

The internal electrical main feeder shall be copper cable bus with the equipment ground connected to a grounding stud. Electrical assembly shall

be prewired with easily removable and resettable stainless steel connection plates housing receptacle and circuit breaker. Each receptacle shall be of standard NEMA configuration and shall be positively grounded to both the receptacle connection plate and body of the enclosure. Each connection plate shall have identification plate giving voltage, amperage, phase, item number, and description of equipment connected to the receptacle. Electrical equipment shall be ground fault protected in accordance with NFPA 70. A main service disconnect shall be provided. Coded indicator lights shall be provided to indicate the status of power to each piece of equipment. Controls shall be mounted where indicated.

2.3.2 Mechanical Manifold Assembly

Mechanical manifold assembly shall be in accordance with Section 15400 PLUMBING, GENERAL PURPOSE.

2.4 ELECTRICAL WORK

Electrical systems, components and accessories shall be certified to be in accordance with NFPA 70 and the following:

2.4.1 Installed Equipment Load

Should the electrical load of the approved equipment differ from that specified or shown on the drawings, the contractor shall provide and install electrical service compatible with the approved equipment.

2.4.2 Electrical Equipment and Components

Food service equipment furnished under this section shall have loads, voltages, and phases compatible with building system, and shall conform to manufacturer standards.

2.4.3 Light Fixtures

Provide two (2) each single tube fluorescent fixtures end to end in each refrigerator and freezer with switch. Light fixtures with lamps which are installed in/on fabricated or field-assembled equipment shall be prewired to a junction box for final connection (fixtures shall be continuous run when indicated). Cold storage light fixtures shall be electrically connected through the hub fitting located on the top of the fixture. Horizontal conduit shall be above the ceiling panels. Plastic sleeves shall be installed through ceiling panels for electrical conduit and the penetrations shall be sealed airtight at both sides of panel.

2.4.4 Final Electrical Connection Provisions

Provide final electrical connections to ensure fully functional operation of all components and in a manner so as not to void manufacturer's warranty.

2.4.5 Lamps

Food service equipment containing light fixtures shall have standard appliance type bulbs or energy efficient appliance type bulbs as indicated on the drawings. Exposed fluorescent lamps above or within a food zone shall have plastic coated T-8 energy efficient lamps or standard lamps, sleeved in plastic tube with end caps.

2.5 COLOR

Color shall be as selected by Contracting Officer from manufacturer's full range of standard colors.

Items where color, pattern, or fabric are be selected by Contracting Officer from manufacturer's full range shall have choices submitted to Contracting Officer simultaneously with other items requiring finish selection.

PART 3 EXECUTION

3.1 INSTALLATION

Equipment shall be installed at locations shown in accordance with the manufacturer's written instructions. The Contractor shall make provision for the plumbing, heating, and electrical connections and for equipment indicated as being furnished and installed by the Government.

3.1.1 Equipment Connections

Equipment connections shall be complete for all utilities. Unless otherwise specified, exposed piping shall be stainless steel.

3.1.2 Plumbing Work

Plumbing final connection points of equipment shall be tagged, indicating item number, name of devices or components, and type of utility (drain). Extensions of indirect waste fitting shall be provided to open-sight hub drain, floor sink or floor drains from food service equipment.

3.2 CONSTRUCTION OF FABRICATED EQUIPMENT

3.2.1 Grinding, Polishing, and Finishing

Exposed welded joints shall be ground smooth and finished to match the adjoining material. Wherever materials have been depressed or sunken by welding operation, such depressions shall be hammered and peened flush with the adjoining surface, and again ground to eliminate high spots. Ground surfaces shall then be polished or buffed to match adjoining surfaces. Care shall be exercised in the grinding operations to avoid excessive heating of the metal and metal discoloration. Abrasives, wheels, and belts used in grinding shall be free of iron and shall not have been used on carbon steel. In all cases, the grain of rough grinding shall be removed by several successively finer polishing operations. The texture of the final polishing operation shall be uniform, smooth, and consistent. The grain direction of horizontal stainless steel surface shall be longitudinal, including the splash back. Polishing at right angle corners shall provide a mitered appearance. Butt and contact joints shall be close fitting and not require solder as a filler. Wherever brake bends occur, the bends shall be free of open texture or orange peel appearance. Where brake work does mar the uniform appearance of the material, such marks shall be removed by grinding, polishing, and finishing. Sheared edges shall be free of burrs, projections, and fins. Where miters or bullnosed corners occur, such miters and corners shall be finished with the underage of the material and ground to a uniform condition. Overlapping of material is not acceptable. Exposed stainless steel surfaces shall have a No. 3 or 4 finish. Finishes of materials, other than stainless steel, shall be comparable in appearance to commercial mill finish. Exposed surfaces shall

include:

a. Exterior surfaces exposed to view.

b. Interior surfaces exposed to view in doorless cabinets.

c. Undersides of shelves shall have a ground finish of No. 90 grit or finer.

3.2.2 Fastening Devices

Fastening devices shall be of the same material as the metal being joined when joint pieces are of similar metal. Fastening devices shall be stainless steel when stainless steel is joined to dissimilar metal. Stud bolts shall be a minimum of M6 stainless steel with length necessary to accept washers, and required nuts, and shall be welded 225 mm on center maximum. Exposed surfaces of equipment shall be free of bolts, screws, and rivet heads. Threads of stud bolts which are on the inside of fixtures and are either visible or might come in contact with a wiping cloth, shall be capped with chrome plated washers, lock washers, and chromium-plated brass cap nuts.

3.2.3 Welding

3.2.3.1 Welding Rods

Welding shall be done with welding rods of the same composition as the sheets or parts welded.

3.2.3.2 Weld Quality

Welds shall be strong and ductile. Welds shall be free of imperfections such as pits, runs, spatter, cracks, low spots, voids, and shall be finished to have the same color as the adjoining surfaces. Butt welds made by welding straps under seams, or by filling in with solder, or by grinding will not be acceptable. Welded joints shall be homogeneous with the sheet metal. Spot welding shall not be substituted for continuous welding. Joints shall be joined by heli-arc welding or a process other than carbon-arc welding or one that will permit carbon pick-up. Joints shall be fully welded. Exposed welds shall be ground smooth, flush with adjacent surface and free of burrs and sharp edges. Wherever welds occur on nonfood contact surfaces not suitable for grinding or polishing, such welds and the accompanying discoloration shall be sandblasted and coated in the factory with a nontoxic metallic-base paint. Bolts and screws shall be welded by a process that will minimize the possibility of carbide precipitation. Welds in galvanized steel made after galvanizing, and the adjacent areas where galvanizing is damaged, shall be cleaned and coated with galvanizing repair compound.

3.2.4 Soldering

Soldering shall serve only as a filler to prevent leakage and shall be made with solder material. Stainless steel requiring soldering shall first be cleaned of discoloration and then have a soldering flux applied. Excess or remaining flux and catalytic material shall be removed after the soldering has been completed, and the entire soldered joint and adjacent metallic surfaces shall be cleaned with a liquid alkaline or neutralizing agent to prevent any attack on the surrounding metallic surfaces by the soldering flux.

3.2.5 Brazing

Brazing shall be accomplished with brazing material. Brazing shall be used only on copper tubing to brass and bronze connection fittings.

3.3 TESTING

Equipment shall be inspected and tested under operating conditions after installation. If inspection or test shows defects, such defects shall be corrected, and inspection and test shall be repeated. Refrigerator tests shall include the following:

3.3.1 Performance Tests

A detail written test procedure shall be submitted prior to performance of tests. The Contractor shall furnish all instruments, test equipment, and personnel required for the tests; Government will furnish the necessary water and electricity for the installed equipment. Evidence shall be submitted that the instruments have been properly calibrated by an independent laboratory at the Contractor's expense.

3.3.2 Operating Tests

An operating test shall be performed on all items after complete installation and adjustment. The failed test item shall be corrected and the test shall be rerun.

3.3.3 Clean and Adjust

Debris resulting from this work, as the installation progresses, shall be removed from the jobsite. All food service equipment, prior to demonstration, shall be cleaned and polished, both interior/exterior. Thermostatic controls, and temperature sensors shall be adjusted, as required, for proper operation. Damage to painted finishes shall be touched up.

3.3.4 Equipment Start-Up/Demonstration

The Contractor shall obtain the services of the manufacturer's representative experienced in the installation, adjustment and operation of the equipment specified. The representative shall supervise the start-up, adjustment, and testing of the equipment, prior to the demonstration. Equipment shall be carefully tested, adjusted, and regulated in accordance with the manufacturer's instructions and shall be so certified in writing. A thorough operational demonstration shall be provided of all equipment and instructions furnished for general and specific care and maintenance. Selected items of equipment and attendees shall be scheduled, with the Contracting Officer, at least 2 weeks in advance of demonstration periods.

-- End of Section --

SECTION 12600

FURNITURE, FURNISHINGS AND EQUIPMENT (FFE)

PART 1 GENERAL

1.1 SUBMITTALS

Government approval is required for submittals with a "G" designation; submittals not having a "G" designation are for information only. When used, a designation following the "G" designation identifies the office that will review the submittal for the Government. Submit the following in accordance with Section 01330 SUBMITTAL PROCEDURES:

SD-03, Data

Furniture, Furnishings and Equipment; G.

As soon as practical and before start of installation, submit a complete list of furniture, furnishings, and equipment for approval. The list shall include, manufacturers' names, addresses and model, style or catalog numbers with trade names and include catalog cuts, colors, diagrams, drawings, and other descriptive data as may be required.

1.2 SUMMARY

This Section covers all materials, labor, services, and incidentals necessary for procurement, delivery and installation of furniture, furnishings, and equipment (FFE). All FFE shall be new and shall conform to the drawings and specifications. Manufacturers and model numbers are listed to establish required quality characteristics and materials of items to be provided. Installation shall be where indicated on the drawings or as specified herein.

1.3 GENERAL REQUIREMENTS

1.3.1 Quality

All materials and products shall be new material.

1.4 DELIVERY AND STORAGE

All equipment delivered and placed in storage shall be stored with protection from damage, the weather, humidity, temperature variations, dirt and dust, or other contaminants.

PART 2 PRODUCTS

2.1 STACK CHAIR

Total Quantity: 1002 in Dining Facility.
Dimensions: 0.55 m × 0.50 m × 0.79 m.
Salient Features: Four leg stack chair with wooden back and seat. Tubular steel frame shall be electro statically painted. Provide ganging capability.

2.2 FOLDING TABLE

Total Quantity: 167 in Dining Facility.
Salient Features: Rectangular, Folding tubular steel.
Dimensions: 2.00 m × 0.90 m × 0.76 m, 2 cm thick top.
Solid wood or MDF Top with PVC edging. Metal legs, electro statically painted.

PART 3 EXECUTION

3.1 PREPARATION

Prior to installation of FFE items, clean and vacuum floor surface to remove dust, debris and loose particles. Verify that components, including size and finish, are those specified before installing.

3.2 ASSEMBLY AND TESTING

Uncrate and completely assemble all FFE items. Uncrating, assembly and installation of items shall be accomplished by workmen skilled in this type of work. After placement, each item shall be tested as necessary to assure readiness for operation and use.

3.3 FIELD QUALITY CONTROL

Remove and replace items or components which are chipped, scratched or otherwise damaged.

3.4 INSPECTION AND CLEANING

A. Immediately prior to acceptance of the contract work, inspect and clean all items of FFE. Cleaning shall be as recommended by the manufacturer of the item.

B. Remove all surplus materials, rubbish and debris resulting from installation upon completion of work and leave areas of installation in neat and clean condition.

3.5 PROTECTION

Protect all FFE items against damage during remainder of construction period so that items will be without damage or deterioration at time of completion.

-- End of Section --

SECTION 13080

SEISMIC PROTECTION FOR MISCELLANEOUS EQUIPMENT

PART 1 GENERAL

1.1 REFERENCES

The publications listed below form a part of this specification to the extent referenced. The publications are referred to within the text by the basic designation only.

ASME INTERNATIONAL (ASME)

ASME B18.2.1	(1996 R 2005) Square and Hex Bolts and Screws, Inch Series

ASTM INTERNATIONAL (ASTM)

ASTM A 307	(2004) Carbon Steel Bolts and Studs, 60 000 PSI Tensile Strength
ASTM A 325	(2006) Structural Bolts, Steel, Heat Treated, 120/105 ksi Minimum Tensile Strength
ASTM A 36/A 36M	(2005) Carbon Structural Steel
ASTM A 500	(2003a) Cold-Formed Welded and Seamless Carbon Steel Structural Tubing in Rounds and Shapes
ASTM A 53/A 53M	(2006a) Pipe, Steel, Black and Hot-Dipped, Zinc-Coated, Welded and Seamless
ASTM A 563	(2004a) Carbon and Alloy Steel Nuts
ASTM A 572/A 572M	(2006) High-Strength Low-Alloy Columbium-Vanadium Structural Steel
ASTM A 603	(1998; R 2003) Zinc-Coated Steel Structural Wire Rope
ASTM A 653/A 653M	(2006a) Steel Sheet, Zinc-Coated (Galvanized) or Zinc-Iron Alloy-Coated (Galvannealed) by the Hot-Dip Process
ASTM E 488	(1996; R 2003) Strength of Anchors in Concrete and Masonry Elements

INTERNATIONAL CODE COUNCIL (ICC)

IBC	(2006) International Building Code

1.2 SYSTEM DESCRIPTION

1.2.1 General Requirements

The requirements for seismic protection measures described in this section shall be applied to the mechanical equipment and systems, the electrical equipment and systems outlined in Section 16070 SEISMIC PROTECTION FOR ELECTRICAL EQUIPMENT, and the miscellaneous equipment and systems listed below. Seismic protection requirements shall be in accordance with IBC, and shall be provided in addition to any other requirements called for in other sections of these specifications. The design for seismic protection shall be based on a Seismic Use Group I building occupancy and on site response coefficients for Ss= 1.28g and S_1=0.51g. Soil site classification will be determined by geotechnical investigation. Resistance to lateral forces induced by earthquakes shall be accomplished without consideration of friction resulting from gravity loads.

1.2.2 Miscellaneous Equipment and Systems

The bracing for the following miscellaneous equipment and systems shall be developed by the Contractor in accordance with the requirements of this specification:

Ceiling framing for drywall and acoustical ceilings

1.3 SUBMITTALS

Government approval is required for submittals with a "G" designation; submittals not having a "G" designation are for information only. When used, a designation following the "G" designation identifies the office that will review the submittal for the Government. The following shall be submitted in accordance with Section 01330 SUBMITTAL PROCEDURES:

SD-02 Shop Drawings

Bracing; G AED
Resilient Vibration Isolation Devices; G AED
Equipment Requirements; G AED

Detail drawings along with catalog cuts, templates, and erection and installation details, as appropriate, for the items listed. Submittals shall be complete in detail; shall indicate thickness, type, grade, class of metal, and dimensions; and shall show construction details, reinforcement, anchorage, and installation with relation to the building construction. For equipment and systems in buildings that have a performance objective higher than life-safety, the drawings shall be stamped by the registered engineer who stamps the calculations required above.

SD-03 Product Data

Bracing; G AED
Equipment Requirements; G AED

Copies of the design calculations with the detail drawings. Calculations shall be stamped by a registered engineer and shall verify the capability of structural members to which bracing is attached for carrying the load from the brace.

1.4 EQUIPMENT REQUIREMENTS

1.4.1 Rigidly Mounted Equipment

The specific items of equipment as indicated on the mechanical and electrical drawings to be furnished under this contract shall be constructed and assembled to withstand the seismic forces specified in IBC. For any rigid equipment which is rigidly attached on both sides of a building expansion joint, flexible joints for piping, electrical conduit, etc., that are capable of accommodating displacements equal to the full width of the joint in both orthogonal directions, shall be provided.

1.4.2 Nonrigid or Flexibly-Mounted Equipment

The specific items of equipment as indicated on the mechanical and electrical drawings to be furnished under this contract shall be constructed and assembled to resist a horizontal lateral force of one times the operating weight of the equipment at the vertical center of gravity of the equipment.

PART 2 PRODUCTS

2.1 BOLTS AND NUTS

Squarehead and hexhead bolts, and heavy hexagon nuts, bolts and nuts ASME B18.2.1, ASME B 18.2.2, or ASTM A 307 for bolts, and ASTM A 563 for nuts or ASTM A 325 for bolts and nuts. Bolts and nuts used underground and/or exposed to weather shall be galvanized and in accordance with ASTM A 153/153M.

2.2 SWAY BRACING

Material used for members listed in this section, shall be structural steel conforming with the following:

a. Plates, rods, and rolled shapes, ASTM A 36/A 36M. If the Contractor does the design, both ASTM A 36/A 36Mand ASTM A 572/A 572M, grade 503 will be allowed.

b. Wire rope, ASTM A 603.

c. Tubes, ASTM A 500, Grade B.

d. Pipes, ASTM A 53/A 53M, Type E or S, Grade B.

e. Light gauge angles, less than 6 mm thickness, ASTM A 653/A 653M.

PART 3 EXECUTION

3.1 BRACING

Bracing shall conform to the arrangements shown. Trapeze-type hanger shall be secured with not less than two 13 mm bolts.

3.2 BUILDING DRIFT

Sway braces for a piping run shall not be attached to two dissimilar

structural elements of a building that may respond differentially during an earthquake unless a flexible joint is provided.

3.3 ANCHOR BOLTS

3.3.1 Cast-In-Place

Floor or pad mounted equipment shall use cast-in-place anchor bolts, except as specified below. Two nuts for vibrating equipment applications and one nut for non-vibrating equipment applications shall be provided on each bolt. Anchor bolts shall conform to ASTM A 307. Anchor bolts shall have an embedded straight length equal to at least 12 times nominal diameter of the bolt. Anchor bolts that exceed the normal depth of equipment foundation piers or pads shall either extend into concrete floor or the foundation shall be increased in depth to accommodate bolt lengths.

3.3.2 Expansion or Chemically Bonded Anchors

Expansion or chemically bonded anchors shall not be used unless test data in accordance with ASTM E 488 has been provided to verify the adequacy of the specific anchor and application. Expansion or chemically bonded anchors shall not be used to resist pull-out in overhead and wall installations if the adhesive is manufactured with temperature sensitive epoxies and the location is accessible to a building fire. Expansion and chemically bonded anchors shall be installed in accordance with the manufacturer's recommendations. The allowable forces shall be adjusted for the spacing between anchor bolts and the distance between the anchor bolt and the nearest edge, as specified by the manufacturer.

3.3.2.1 General Testing

Expansion and chemically bonded anchors shall be tested in place after installation. The tests shall occur not more than 24 hours after installation of the anchor and shall be conducted by an independent testing agency; testing shall be performed on random anchor bolts as described below.

3.3.2.2 Torque Wrench Testing

Torque wrench testing shall be done on not less than 50 percent of the total installed expansion anchors and at least one anchor for every piece of equipment containing more than two anchors. The test torque shall equal the minimum required installation torque as required by the bolt manufacturer. Torque wrenches shall be calibrated at the beginning of each day the torque tests are performed. Torque wrenches shall be recalibrated for each bolt diameter whenever tests are run on bolts of various diameters. The applied torque shall be between 20 and 100 percent of wrench capacity. The test torque shall be reached within one half turn of the nut, except for 9 mm sleeve anchors which shall reach their torque by one quarter turn of the nut. If any anchor fails the test, similar anchors not previously tested shall be tested until 20 consecutive anchors pass. Failed anchors shall be retightened and retested to the specified torque; if the anchor still fails the test it shall be replaced.

3.3.2.3 Pullout Testing

Expansion and chemically bonded anchors shall be tested by applying a pullout load using a hydraulic ram attached to the anchor bolt. At least 5 percent of the anchors, but not less than 3 per day shall be tested. The

load shall be applied to the anchor without removing the nut; when that is not possible, the nut shall be removed and a threaded coupler shall be installed of the same tightness as the original nut. The test setup shall be checked to verify that the anchor is not restrained from withdrawing by the baseplate, the test fixture, or any other fixtures. The support for the testing apparatus shall be at least 1.5 times the embedment length away from the bolt being tested. Each tested anchor shall be loaded to 2 times the design tension value for the anchor. The anchor shall have no observable movement at the test load. If any anchor fails the test, similar anchors not previously tested shall be tested until 20 consecutive anchors pass. Failed anchors shall be retightened and retested to the specified load; if the anchor still fails the test it shall be replaced.

3.4 RESILIENT VIBRATION ISOLATION DEVICES

Where the need for these devices is determined, based on the magnitude of the design seismic forces, selection of anchor bolts for vibration isolation devices and/or snubbers for equipment base and foundations shall follow the same procedure as in paragraph ANCHOR BOLTS, except that an equipment weight equal to five times the actual equipment weight shall be used.

3.4.1 Resilient and Spring-Type Vibration Devices

Vibration isolation devices shall be selected so that the maximum movement of equipment from the static deflection point shall be 13 mm .

3.4.2 Multidirectional Seismic Snubbers

Multidirectional seismic snubbers employing elastomeric pads shall be installed on floor- or slab-mounted equipment. These snubbers shall provide 6 mm free vertical and horizontal movement from the static deflection point. Snubber medium shall consist of multiple pads of cotton duct and neoprene or other suitable materials arranged around a flanged steel trunnion so both horizontal and vertical forces are resisted by the snubber medium.

3.5 SWAY BRACES FOR PIPING

Transverse sway bracing for steel and copper pipe shall be provided at intervals not to exceed those shown on the drawings. Transverse sway bracing for pipes of materials other than steel and copper shall be provided at intervals not to exceed the hanger spacing as specified in Section 15400 PLUMBING, GENERAL PURPOSE. Bracing shall consist of at least one vertical angle 50 x 50 mm x 16 gauge and one diagonal angle of the same size.

3.5.1 Longitudinal Sway Bracing

Longitudinal sway bracing shall be provided.

3.5.2 Anchor Rods, Angles, and Bars

Anchor rods, angles, and bars shall be bolted to either pipe clamps or pipe flanges at one end and cast-in-place concrete or masonry insert or clip angles bolted to the steel structure on the other end. Rods shall be solid metal or pipe as specified below. Anchor rods, angles, and bars shall not exceed lengths given in the tabulation below.

3.5.3 Maximum Length for Anchor Braces

Type	Size (millimeters)	Maximum Length* (meters)
Angles	38 x 38 x 6	1.5
	50 x 50 x 6	2.0
	64 x 38 x 6	2.5
	75 x 64 x 6	2.5
	75 x 75 x 6	3.0
Rods	91	1.0
	22	1.0
Flat Bars	38 x 6	0.4
	50 x 6	0.4
	50 x 10	0.5
Pipes (40s)	25	2.0
	32	2.8
	40	3.2
	50	4.0

3.5.4 Bolts

Bolts used for attachment of anchors to pipe and structure shall be not less than 13 mm diameter.

3.6 EQUIPMENT SWAY BRACING

3.6.1 Suspended Equipment and Light Fixtures

Equipment sway bracing shall be provided for items supported from overhead floor or roof structural systems, including light fixtures. Braces shall consist of angles, rods, wire rope, bars, or pipes arranged as shown and secured at both ends with not less than 13 mm bolts. Sufficient braces shall be provided for equipment to resist a horizontal force as specified in IBC without exceeding safe working stress of bracing components. The Contractor shall provide, for approval, specific force calcualtions in accordance with Chapter 16 of IBC. for the equipment in the project. Details of equipment bracing shall be submitted for acceptance. In lieu of bracing with vertical supports, these items may be supported with hangers inclined at 45 degrees directed up and radially away from equipment and oriented symmetrically in 90-degree intervals on the horizontal plane, bisecting the angles of each corner of the equipment, provided that supporting members are properly sized to support operating weight of equipment when hangers are inclined at a 45-degree angle.

3.6.2 Floor or Pad Mounted Equipment

3.6.2.1 Shear Resistance

Floor mounted equipment shall be bolted to the floor. Requirements for the number and installation of bolts to resist shear forces shall be in accordance with paragraph ANCHOR BOLTS.

3.6.2.2 Overturning Resistance

The ratio of the overturning moment from seismic forces to the resisting moment due to gravity loads shall be used to determine if overturning forces need to be considered in the sizing of anchor bolts. Calculations shall be provided to verify the adequacy of the anchor bolts for combined shear and overturning.

-- End of Section --

SECTION 13090

X-RAY SHIELDING

PART 1 GENERAL

1.1 REFERENCES

The publications listed below form a part of this specification to the extent referenced. The publications are referred to in the text by basic designation only.

ASTM INTERNATIONAL (ASTM)

ASTM B 749	(1997) Lead and Lead Alloy Strip, Sheet, and Plate Products
ASTM C 36/C 36M	(1999) Gypsum Wallboard

NATIONAL COUNCIL ON RADIATION PROTECTION AND MEASUREMENTS (NCRP)

NCRP Rpt 35	(1970) Dental X-Ray Protection
NCRP Rpt 49	(1976) Structural Shielding Design and Evaluation for Medical Use of X-Rays and Gamma Rays of Energies up to 10 MeV
NCRP Rpt 102	(1989) Medical X-Ray, Electron Beam and Gamma-Ray Protection for Energies up to 50 MeV (Equipment Design, Performance and Use)

WINDOW AND DOOR MANUFACTURERS ASSOCIATION (WDMA)

WDMA I.S. 1	(1997) Wood Flush Doors

1.2 SYSTEM DESCRIPTION

X-ray shielding shall be constructed such that it is not impaired by joints, openings for ducts, pipes, or other openings through shielding, or conduits, service boxes, and other items embedded in the shielding. The shielding shall appear to be continuous. Lead patches, lead sleeves, and/or mazes shall be installed as required to provide continuity of the shielding. Sleeves shall be not less than one inch in length. Thicknesses indicated for shielding are minimum acceptable thickness.

1.3 MATERIAL AUTHENTICATION DATA INCLUDED IN DESIGN ANALYSIS

Items with a "G" designation require Government approval; items not having a "G" designation are for information only. The following is submitted in accordance with Section 01335 SUBMITTAL PROCEDURES FOR DESIGN/BUILD PROJECT. It is included in the Design Analysis for this project.

SD-02 Shop Drawings

Lead Sheet; G.

Drawings indicating thickness of lead at all locations; construction at floor, walls, ceiling, and columns; details of lead laps and lap securing methods; fastenings, profiles, details of items and accessories penetrating the shielding materials; and any special method of construction.

SD-03 Product Data

Lead Sheet; G.

Manufacturer's catalog cuts, descriptive data, and installation instructions.

1.4 DELIVERY, STORAGE AND HANDLING

Materials shall be delivered in the original containers bearing the name of the manufacturer and brand name. Shielding materials shall be stored off the ground under watertight cover. Damaged materials shall be removed from the premises.

1.5 WARRANTY

Lead sheet shielding materials shall be warranted against sagging and curling for 10 years.

PART 2 PRODUCTS

Basis of Design: Radiation Shielding Products by A & L SHIELDING

2.1 LEAD SHEET

Lead sheet shall conform to ASTM B 749, Grade C, thickness as shown.

2.2 LEAD-LINED GYPSUM WALLBOARD

Lead-lined gypsum wallboard shall be a single thickness of unpierced lead laminated to 16 mm (5/8 inch) thick gypsum board conforming to ASTM C 36/C 36M.

2.3 LEAD-HEADED NAILS

Lead-headed nails may be used to accomplish shielding not less than that provided by the barrier. The size, type and design shall be recommended by the manufacturer of material to be installed.

2.4 LEAD TABS OR CLIPS

Lead tabs or clips shall be unpierced sheet lead not less than the thickness of lead in the barrier. Prior to folding, the tabs shall be rectangular in shape and shall be the required size to provide an effective lead lap over an unleaded nail, screw, or tie wire penetration when folded.

2.5 LEAD-LINED WOOD DOORS

Lead-lined wood doors shall be good grade, hardwood veneer, solid core, in accordance with WDMA I.S. 1. Lead sheet shall extend to door edges and provide x-ray absorption equal to the partition in which the door is installed. Face veneer for lead-lined doors shall be to match adjacent doors. Doors shall have filler strips, crossbanding face veneers and hardwood edge strips glued under heavy pressure with contact adhesive.

2.5.1 Shielding

Cores shall be secured together with steel bolts, using washers under heads and nuts. Bolts shall be spaced not more than 38 mm from edges around door perimeter and not more than 200 mm on centers in both directions. Bolts shall be countersunk and have poured lead or lead dowels covering heads and nuts flush with face of core. Door thickness shall be manufacturer's standard for lead thickness used, unless shown otherwise.

2.5.2 Painting and Sealing Doors

Top and bottom edges of doors to be painted shall receive two factory coats of spar varnish before shipment to jobsite. Doors to be stained or have a natural finish shall receive two shop coats of water-resistant sealer before shipment to jobsite.

2.5.3 Door Hardware

Door hardware shall be as specified in Section 08710 DOOR HARDWARE. Mortises for floor hinge arms and top pivots with sheet lead and necessary lead plugs, sheet lead, stainless steel pans, bolts and screws shall be provided.

2.6 LEAD-LINED STEEL DOOR FRAMES

Steel frames shall be as specified in Section 08110 STEEL DOORS AND FRAMES. The inside of frames shall be lined with a single thickness of sheet lead. The thickness of the lead lining shall be the same as the lead lining of the system in which the frames are used. Linings shall be installed at the factory, and shall be continuous. Lining shall be formed to contour of frame. Lead shields shall be formed around areas prepared to receive hardware. Each lining shall be wide enough to provide and maintain an effective lead lap with the lead of the adjoining shielding units.

2.7 OPERATORS PROTECTIVE SCREEN

Operators protective screen shall be constructed of studs, surfaced with lead-lined gypsum wallboard conforming to ASTM C 36/C 36M secured to studs with appropriate fasteners, with lead washer or tabs. Plywood-hinged screens and fixed screens after installation shall be finished in the same manner as specified for doors. At corners, or where screen abuts a wall or floor, screen panels shall be joined to provide an effective lap of lead. Lead or lead-lined viewing window shall be built-in.

2.8 DESIGNATING PLAQUES

2.8.1 Required Information

Designating plaques shall be furnished and installed as specified below in rooms and as indicated on the drawings. Locations where shielding thickness changes, or is not continuous, shall be indicated on the plaque. Plaque shall be of aluminum, plastic, bakelite, or other approved materials and shall be sized to contain the required information as specified below.

2.8.2 X-Ray and Examination Rooms

One sign shall be provided for x-ray rooms lettered as follows:

"THE PARTITIONS, THE DOORS, AND THE LEAD-LINED SHIELD OF THIS ROOM HAVE BEEN INSULATED WITH SHEET LEAD 3 mm THICK."

2.8.3 Rooms With Nonshielded Partitions

One sign shall be provided for each lead-shielded partition in a room for which all partitions are not shielded. A sign shall be located on lead-insulated partition and lettered as follows:

"THIS PARTITION HAS BEEN SHIELDED TO THE HEIGHT OF 2.0 METERS WITH SHEET LEAD 3 mm THICK"

PART 3 EXECUTION

3.1 INSTALLATION

Installation shall be performed in accordance with drawings and approved manufacturer's recommendations and NCRP Rpt 35, NCRP Rpt 49, and NCRP Rpt 102.

3.1.1 Workmanship

Sheet lead shall be installed free of waves, lumps, and wrinkles and with a minimum of joints. Joints in sheet lead shall provide protection equivalent to the protection provided by the adjacent sheet lead. Joints shall be finished smooth and neat.

3.1.2 Protection

Lead shields shall be used to maintain continuity of protection where unshielded built-in items penetrate lead linings. Where outlet boxes, junction boxes, ducts, conduits, and similar items prevent the use of shields, lead sleeves or lead lining shall be used. Fasteners shall not disrupt the continuity of shielding.

3.2 Shielding

Sheet lead less than 3 mm-thick shall be applied in a single layer with a 38 mm minimum lap at joints. Sheet lead more than 3 mm thick shall be applied in two or more layers 3 mm or less in thickness with 38 mm minimum lap at joints or shall be applied in a single layer with joints butted and covered with lead strips not less than the thickness required for floor lining and as detailed.

3.3 LEAD-LINED GYPSUM WALLBOARD

Lead-lined gypsum wallboard shall be applied over supports as recommended by manufacturer and as specified in Section 09250 GYPSUM WALLBOARD. Method of predrilling or drilling pilot holes shall not cause deformation of the fastener and shall not cause distortion of wallboard. Wallboard shall be applied vertically, with long edges parallel to supports, and with lead linings placed next to supports. Blocking shall be provided at end joints.

3.3.1 Joints

Sheet-lead strips not less than the lead thickness used for wallboard and not less than 38 mm wide shall be installed on blocking and supports at all joints.

3.3.2 Corner Joints

Corner joints shall consist of 45 x 45 mm (1-3/4 x 1-3/4 inch) lead angle.

3.3.3 Wood Supports

The sheet-lead strips shall be secured to blocking and supports at outer edges with wire nails. Edges of wallboard shall then be butt-jointed and fastened to supports with lead-headed nails at approximately 200 mm on centers at joints and 300 mm on center at intermediate supports with nail heads driven slightly below the surface of wallboard.

3.3.4 Metal Supports

Edges of gypsum wallboard at metal studs shall be fastened with 25 mm (1 inch) long lead-headed screws. Heads shall be covered with 13 mm (1/2 inch) diameter lead disc cemented to wallboard and installed flush with surface of wallboard.

3.3.5 Finish Ply

Gypsum wallboard not scheduled to be plastered shall receive a finish ply of gypsum wallboard bonded to the first ply with laminating adhesive as recommended by the wallboard manufacturer. Nailing the finish ply will not be permitted. A shoring system shall be used to hold finish ply in place during adhesive drying period. Shoring shall be left in place at least 24 hours. Joint and corner treatment shall be as specified in Section 09250 GYPSUM WALLBOARD.

3.4 LEAD DOOR THRESHOLDS

Thresholds shall be installed in accordance with approved detail drawings and shall be constructed as detailed on plans. Prior to installation, lead threshold surfaces in contact with concrete shall be painted with a coat of asphalt paint or latex material.

3.5 LEAD-LINED WOOD DOORS

Doors shall be fit, hung, and trimmed as required. Doors shall be installed with a clearance of 2 mm at sides and top and minimum adequate clearance at bottom. Lock edge shall be beveled 3 mm (1/8 inch), and hardware shall be adjusted as required. Warp or twist of lead-lined doors after doors have been hung and finished shall not exceed 6 mm in any face dimension of door including full diagonal. Cuts required for installation shall be sealed with a clear varnish or sealer.

3.5.1 Door Hardware

Bolts and screws which penetrate lead lining shall be recessed on the side of the door opposite hardware and shall be plugged with lead plugs to match face of door. Nuts for securing surface-applied hardware such as hinges, door closers and automatic door operators shall be countersunk and covered with lead-lined 1.59 mm thick (16 gauge) stainless steel pans. Stainless steel pans shall be secured with round-head screws with dull chromium-plated finish. Cutouts for lock sets and latch cases shall be patched with sheet lead. Lead lining of the lock set and lead lining of the door shall be lapped to provide x-ray absorption equal to the door.

3.6 TESTING AND CERTIFICATION

Before and after x-ray equipment has been installed and placed in operating condition, the x-ray installation shall be surveyed by a qualified expert as defined in NCRP Rpt 35, NCRP Rpt 49, and NCRP Rpt 102. Survey shall be performed in accordance with NCRP Rpt 35, NCRP Rpt 49, and NCRP Rpt 102. Four copies of surveyor's report shall be furnished to the Government. Any part of x-ray shielding work found to be defective shall be corrected or replaced, including all other work affected thereby.

-- End of Section --

SECTION 13100

LIGHTNING PROTECTION SYSTEM

PART 1 GENERAL

1.1 REFERENCES

The publications listed below form a part of this specification to the extent referenced. The publications are referred to in the text by basic designation only.

AMERICAN NATIONAL STANDARDS INSTITUTE (ANSI)

ANSI C135.30	(1988) Zinc-Coated Ferrous Ground Rods for Overhead or Underground Line Construction

BRITISH STANDARDS INSTITUTION (BSI)

BS 6651	(1999) Code Of Practice For Protection Of Structures Against Lightning
BS 7430	(1998) Code of Practice for Earthing

NATIONAL FIRE PROTECTION ASSOCIATION (NFPA)

NFPA 70	(2005) National Electrical Code
NFPA 780	(1997) Installation of Lightning Protection Systems

UNDERWRITERS LABORATORIES (UL)

UL 96	(1994; Rev thru Jan 2000) Lightning Protection Components
UL 96A	(1994; Rev thr Jul 1998) Installation Requirements for Lightning Protection Systems
UL 467	(1993; R 2001) Grounding and Bonding Equipment

1.2 GENERAL REQUIREMENTS

1.2.1 Verification of Dimensions

The Contractor shall become familiar with all details of the work, verify all dimensions in the field, and shall advise the Contracting Officer of any discrepancy before performing the work. No departures shall be made without the prior approval of the Contracting Officer.

1.2.2 System Requirements

The system furnished under this specification shall consist of the standard products of a manufacturer regularly engaged in the production of lightning

protection systems and shall be the manufacturer's latest UL approved design. The lightning protection system shall conform to NFPA 70 and NFPA 780, UL 96 and UL 96A, UL 467, BS 6651 or BS 7430 except where requirements in excess thereof are specified herein.

1.2.3 Protection Location Requirements

Provide lightning protection at the roof of the power plant.

1.3 MATERIAL AUTHENTICATION DATA INCLUDED IN DESIGN ANALYSIS

Items with a "G" designation require Government approval; items not having a "G" designation are for information only. The following is submitted in accordance with Section 01335 SUBMITTAL PROCEDURES FOR DESIGN/BUILD PROJECT. It is included in the Design Analysis for this project.

SD-03 Product Data

Materials

Provide manufacturer's cut sheets for all products supplied in this section.

1.4 DOCUMENTATION FOR PROPOSED VARIANT PRODUCTS

For products not explicitly named in the specification that meet product requirement criteria named herein, product data as listed in article titled MATERIAL AUTHENTICATION DATA INCLUDED IN DESIGN ANALYSIS shall be submitted for review. Product information will be provided to establish that proposed product meets the requirements of this specification and has the indicated qualities related to type, function, dimension, in-service performance, physical properties, appearance, or other relevant characteristics that equal or exceed those of specified product. Product is consistent with the Contract Documents and will produce the indicated results, and is compatible with other portions of the Work.

PART 2 PRODUCTS

2.1 MANUFACTURER

Basis of Design: As indicated in this section.

Acceptable Manufacturers:

1. Basis of Design manufacturers.
2. Equivalent product complying with requirements of this specification for proposed variant products.

2.2 MATERIALS

2.2.1 General Requirements

No combination of materials shall be used that form an electrolytic couple of such nature that corrosion is accelerated in the presence of moisture unless moisture is permanently excluded from the junction of such metals. Where unusual conditions exist which would cause corrosion of conductors, conductors with protective coatings or oversize conductors shall be used. Where a mechanical hazard is involved, the conductor size shall be increased to compensate for the hazard or the conductors shall be protected

by covering them with molding or tubing made of wood or nonmagnetic material. When metallic conduit or tubing is used, the conductor shall be electrically connected at the upper and lower ends.

Basis of Design: Harger.

2.2.2 Main and Secondary Conductors

Conductors shall be in accordance with NFPA 780 and UL 96 for Class I, Class II, or Class II modified materials.

2.2.2.1 Copper

Copper conductors used on nonmetallic stacks shall weigh not less than 170 kg per 300 m (375 pounds per thousand feet), and the size of any wire in the cable shall be not less than No. 15 AWG. The thickness of any web or ribbon used on stacks shall be not less than No. 12 AWG. Counterpoise shall be copper conductors not smaller than No. 1/0 AWG.

2.2.3 Air Terminals

Terminals shall be in accordance with UL 96 and NFPA 780. Air terminals more than 600 mm in length shall be supported by a suitable brace, with guides not less than one-half the height of the terminal.

Basis of Design: Hanger 5824CUAT.

2.2.4 Ground Rods

Rods shall conform to UL 467, ANSI C135.30, BS 7430 or BS 6651.

Use Copper-clad Steel Grounding Rod (minimum 17 mm diameter and minimum 3000 mm in length), by Radsan, Wallis System Protection, Exoweld, Erico Cad weld or Thermoweld.

2.2.5 Connectors

Clamp-type connectors for splicing conductors shall conform to UL 96 for style and size as required for the installation.

2.2.6 Lightning Protection Components

Lightning protection components, such as bonding plates, air terminal supports, chimney bands, clips, and fasteners shall conform to UL 96, classes as applicable.

PART 3 EXECUTION

3.1 INTEGRAL SYSTEM

3.1.1 General Requirements

The lightning protection system shall consist of air terminals, roof conductors, down conductors, ground connections, and grounds, electrically interconnected to form the shortest distance to ground. All conductors on the structures shall be exposed except where conductors are in protective sleeves exposed on the outside walls. Secondary conductors shall interconnect with grounded metallic parts within the building. Interconnections made within side-flash distances shall be at or above the

level of the grounded metallic parts.

3.1.1.1 Air Terminals

Air terminal design and support shall be in accordance with NFPA 780. Terminals shall be rigidly connected to, and made electrically continuous with, roof conductors by means of pressure connectors or crimped joints of T-shaped malleable metal and connected to the air terminal by a dowel or threaded fitting. Air terminals at the ends of the structure shall be set not more than 600 mm (2 feet) from the ends of the ridge or edges and corners of roofs. Spacing of air terminals 600 mm (2 feet) in height on ridges, parapets, and around the perimeter of buildings with flat roofs shall not exceed 7.5 meters. In specific instances where it is necessary to exceed this spacing, the specified height of air terminals shall be increased not less than 50 mm for each 300 mm of increase over 7.5 meters. On large, flat or gently sloping roofs, as defined in NFPA 780, air terminals shall be placed at points of the intersection of imaginary lines dividing the surface into rectangles having sides not exceeding 15 m in length. Air terminals shall be secured against overturning either by attachment to the object to be protected or by means of a substantial tripod or other braces permanently and rigidly attached to the building or structure. Metal projections and metal parts of buildings, smokestacks, and other metal objects that do not contain hazardous materials and that may be struck but not appreciably damaged by lightning, need not be provided with air terminals. However, these metal objects shall be bonded to the lightning conductor through a metal conductor of the same unit weight per length as the main conductor. Where metal ventilators are installed, air terminals shall be mounted thereon, where practicable. Any air terminal erected by necessity adjacent to a metal ventilator shall be bonded to the ventilator near the top and bottom. Where metal ventilators are installed with air terminals mounted thereon, the air terminal shall not be more than 610 mm away from the farther edge or corner. If the air terminal is farther than this distance, an additional air terminal shall be added in order to meet this requirement. Where metal ventilators are installed with air terminals mounted adjacent, the air terminal shall not be more than 610 mm away from the farther edge or corner. If the air terminal is farther than this distance, an additional air terminal shall be added in order to meet this requirement.

3.1.1.2 Roof Conductors

Roof conductors shall be connected directly to the roof or ridge roll. Sharp bends or turns in conductors shall be avoided. Necessary turns shall have a radius of not less than 200 mm. Conductors shall preserve a downward or horizontal course and shall be rigidly fastened every 900 mm along the roof and down the building to ground. Metal ventilators shall be rigidly connected to the roof conductor at three places. All connections shall be electrically continuous. Roof conductors shall be coursed along the contours of flat roofs, ridges, parapets, and edges; and where necessary, over flat surfaces, in such a way as to join each air terminal to all the rest. Roof conductors surrounding tank tops, decks, flat surfaces, and flat roofs shall be connected to form a closed loop.

3.1.1.3 Down Conductors

Down conductors shall be electrically continuous from air terminals and roof conductors to grounding electrodes. Down conductors shall be coursed over extreme outer portions of the building, such as corners, with consideration given to the location of ground connections and air

terminals. Each building or structure shall have not less than two down conductors located as widely separated as practicable, at diagonally opposite corners. On rectangular structures having gable, hip, or gambrel roofs more than 35 m long, there shall be at least one additional down conductor for each additional 15 m of length or fraction thereof. On rectangular structures having French, flat, or sawtooth roofs exceeding 75 m in perimeter, there shall be at least one additional down conductor for each30 m of perimeter or fraction thereof. On an L- or T-shaped structure, there shall be at least one additional down conductor; on an H-shaped structure, at least two additional down conductors; and on a wing-built structure, at least one additional down conductor for each wing. On irregularly shaped structures, the total number of down conductors shall be sufficient to make the average distance between them along the perimeter not greater than 30 meters. On structures exceeding 15 m in height, there shall be at least one additional down conductor for each additional 18 m of height or fraction thereof, except that this application shall not cause down conductors to be placed about the perimeter of the structure at intervals of less than 15 meters. Additional down conductors shall be installed when necessary to avoid "dead ends" or branch conductors ending at air terminals, except where the air terminal is on a roof below the main protected level and the "dead end" or branch conductor is less than5 m in length and maintains a horizontal or downward coursing. Down conductors shall be equally and symmetrically spaced about the perimeter of the structure. Down conductors shall be protected by placing in pvc conduit for a minimum distance of 1800 mm 72 inches above finished grade level.

3.1.1.4 Interconnection of Metallic Parts

Metal doors, windows, and gutters shall be connected directly to the grounds or down conductors using not smaller than No. 6 copper conductor, or equivalent. Conductors placed where there is probability of unusual wear, mechanical injury, or corrosion shall be of greater electrical capacity than would normally be used, or shall be protected. The ground connection to metal doors and windows shall be by means of mechanical ties under pressure, or equivalent.

3.1.1.5 Ground Connections

Ground connections comprising continuations of down conductors from the structure to the grounding electrode shall securely connect the down conductor and ground in a manner to ensure electrical continuity between the two. All connections shall be of the clamp type. There shall be a ground connection for each down conductor. Metal water pipes and other large underground metallic objects shall be bonded together with all grounding mediums. Ground connections shall be protected from mechanical injury. In making ground connections, advantage shall be taken of all permanently moist places where practicable, although such places shall be avoided if the area is wet with waste water that contains chemical substances, especially those corrosive to metal.

3.1.1.6 Grounding Electrodes

A grounding electrode shall be provided for each down conductor located as shown. A driven ground shall extend into the earth for a distance of not less than 3.0 meters. Ground rods shall be set not less than 900 mm, nor more than 2.5 m, from the structures foundation. The complete installation shall have a total resistance to ground of not more than 10 ohms if a counterpoise is not used. Ground rods shall be tested individually prior to connection to the system and the system as a whole shall be tested not

less than 48 hours after rainfall. When the resistance of the complete installation exceeds the specified value or two ground rods individually exceed 10 ohms, the Contracting Officer shall be notified immediately. A counterpoise, where required, shall be of No. 1/0 copper cable or equivalent material having suitable resistance to corrosion and shall be laid around the perimeter of the structure in a trench not less than 600 mm deep at a distance not less than 900 mm nor more than 2.5 m from the nearest point of the structure. All connections between ground connectors and grounds or counterpoise, and between counterpoise and grounds shall be electrically continuous. Where so indicated on the drawings, an alternate method for grounding electrodes in shallow soil shall be provided by digging trenches radially from the building. The lower ends of the down conductors or their equivalent in the form of metal strips or wires are then buried in the trenches.

3.1.2 Metal Roofs

Wood-Frame, Wall-Bearing Masonry or Tile Structure with Metallic Roof and Nonmetallic Exterior Walls, or Reinforced Concrete Building with Metallic Roof: Metal roofs which are in the form of sections insulated from each other shall be made electrically continuous by bonding. Air terminals shall be connected to, and made electrically continuous with, the metal roof as well as the roof conductors and down conductors. Ridge cables and roof conductors shall be bonded to the roof at the upper and lower edges of the roof and at intervals not to exceed 30 meters. The down conductors shall be bonded to roof conductors and to the lower edge of the metal roof. Where the metal of the roof is in small sections, the air terminals and down conductors shall have connections made to at least four of the sections. All connections shall have electrical continuity and have a surface contact of at least 1935 square millimeters (3 square inches).

3.2 INTERCONNECTION OF METAL BODIES

Metal bodies of conductance shall be protected if not within the zone of protection of an air terminal. Metal bodies of conductance having an area of 0.258 square meters (400 square inches) or greater or a volume of 0.0164 cubic meters (1000 cubic inches) or greater shall be bonded to the lightning protection system using main size conductors and a bonding plate having a surface contact area of not less than 1935.5 square millimeters (3 square inches). Provisions shall be made to guard against the corrosive effect of bonding dissimilar metals. Metal bodies of inductance shall be bonded at their closest point to the lightning protection system using secondary bonding conductors and fittings. A metal body that exceeds 1.5 m in any dimension, that is situated wholly within a building, and that does not at any point come within 1.8 m of a lightning conductor or metal connected thereto shall be independently grounded.

3.3 FENCES

Except as indicated below, metal fences that are electrically continuous with metal posts extending at least 600 mm into the ground require no additional grounding. Other fences shall be grounded on each side of every gate. Fences shall be grounded by means of ground rods every 300 to 450 m of length when fences are located in isolated places, and every 150 to 225 m when in proximity to public roads, highways, and buildings. Where the fence consists of wooden posts and horizontal metal strands only, down conductors consisting of No. 8 copper wire or equivalent shall be run from the ground rod the full height of the fence and fastened to each wire, so as to be electrically continuous. The connection to ground shall be made

from the post where it is of metal and is electrically continuous with the fencing. All metal fences shall be grounded at or near points crossed by overhead lines in excess of 600 volts and at distances not exceeding 45 m on each side of line crossings.

3.4 INSPECTION

The lightning protection system will be inspected by the Contracting Officer to determine conformance with the requirements of this specification. No part of the system shall be concealed until so authorized by the Contracting Officer.

-- End of Section --

SECTION 13121

METAL BUILDING SYSTEMS

PART 1 GENERAL

1.1 REFERENCES

The publications listed below form a part of this specification to the extent referenced. The publications are referred to in the text by basic designation only.

ASTM INTERNATIONAL (ASTM)

ASTM A 36/A 36M	(2000a) Carbon Structural Steel
ASTM A 325M	(2002) Specification for High-Strength Bolts for Structural Steel Joints (Metric)
ASTM A 475	(1998) Specification for Zinc-Coated Steel Wire Strand
ASTM A 529/A 529M	(2000) High-Strength Carbon-Manganese Steel of Structural Quality
ASTM A 572/A 572M	(2000a) High-Strength Low-Alloy Columbium-Vanadium Structural Steel
ASTM A 755/A 755M	(2001) Specification for Steel Sheet, Metallic Coated by the Hot-Dip Process and Prepainted by the Coil-Coating Process for Exterior Exposed Building Products
ASTM A 792/A 792M	(1999) Steel Sheet, 55% Aluminum-Zinc Alloy-Coated by the Hot-Dip Process
ASTM A 992/A 992M	(2002) Specification for Steel for Structural Shapes for Use in Building Framing
ASTM A 1008/A 1008M	(2002) Specification for Steel, Sheet, Cold-Rolled, Carbon Structural, High-Strength Low-Alloy with Improved Formability
ASTM A 1011/A 1011M	(2002) Specification for Steel, Sheet and Strip, Hot-Rolled, Carbon, Structural, High-Strength Low-Alloy and High-Strength Low-Alloy with Improved Formability
ASTM C 665	(2001e1) Specification for Mineral-Fiber Blanket Thermal Insulation for Light Frame Construction and Manufactured Housing
ASTM C 1136	(1995) Flexible, Low Permeance Vapor

	Retarders for Thermal Insulation
ASTM F 1554	(1999) Specification for Anchor Bolts, Steel, 36, 55, and 105-ksi Yield Strength

AMERICAN SOCIETY OF CIVIL ENGINEERS (ASCE)

ASCE 7	(1998) Minimum Design Loads for Buildings and Other Structures

METAL BUILDING MANUFACTURERS ASSOCIATION (MBMA)

MBMA MBSM	(2002) Metal Building Systems Manual

SHEET METAL AND AIR CONDITIONING CONTRACTORS' NATIONAL ASSOCIATION (SMACNA)

SMACNA Arch. Manual	(1993; Errata; Addenda Oct 1997) Architectural Sheet Metal Manual

1.2 INTERNATIONAL REFERENCES

Where American standards are referenced, use named standards.

1.3 SYSTEM DESCRIPTION

A. General: Provide a complete, integrated set of metal building system manufacturer's standard mutually dependent components and assemblies that form a metal building system capable of withstanding structural and other loads, thermally induced movement, and exposure to weather without failure or infiltration of water into building interior. Include primary and secondary framing, metal roof panels, and accessories complying with requirements indicated.

   1. Provide metal building system of size and with spacings, slopes, and spans indicated.

B. Primary Frame Type:

   1. Rigid Clear Span: Solid-member, structural-framing system.

C. Secondary Frame Type: Manufacturer's standard purlins and joists.

D. Building size: As indicated on Contract Drawings.

E. Roof slope: As indicated on Contract Drawings.

F. Eave Height: As indicated on Contract Drawings.

G. Horizontal loads in the longitudinal direction may be resisted by "X" bracing if possible, or connections to the top of the cantilevered masonry walls. If the later system is utilized care must be taken to detail a system that will not add out of plan loading to the top of the walls. Detailing between the top of the walls and the metal building is the Metal Building Manufacturer's responsibility.

1.4 SYSTEM PERFORMANCE REQUIREMENTS

1.4.1 Description of building system:

1. Structural system: clear span rigid frame. All frame and column bases are to be "pin-connected". See Contract Drawings for conceptual framing system and column layout.

2. Building size: As indicated on Contract Drawings.

3. Roof slope: As indicated on Contract Drawings.

1.4.2 Structural Performance

Provide metal building systems capable of withstanding the effects of gravity loads and the following loads and stresses within limits and under conditions indicated:

1. Refer to Drawings for location and exact relationship of materials.

2. Design, fabricate, and erect in accord with AISC reference standards.

3. Design the structural system in accord with the design requirements of 2000 International Building Code and the following minimum requirements:

   a. Roof live load: 98kg/Square Meter on horizontal projection.
   b. Roof snow load: 75kg/Square Meter
   c. Wind load: As required by ASCE 7-98. Design wind speed is 122 Kilometers per hour, exposure "C.". Importance Factor = 1.0.
   d. Seismic Load: In accordance with the International Building Code with the following parameters; Ss=1.65g, S1=.75g, Use Group I, Site Class D, Importance Factor 1.0 or eq. as per UBC 1997. Base shear considered in design in ((3*Ca)/R)*W.
   e. Collateral Loads: Include additional dead loads other than the weight of metal building system for permanent items such as mechanical systems, electrical systems, and ceilings.
   f. Auxiliary Loads: Include dynamic live loads, such as those generated by cranes and materials-handling equipment indicated on Drawings.

4. In addition to other dead loads and live loads, design the roof framing to support ceilings, lighting, ductwork, and other equipment included in the work or as reasonably anticipated to be added in the future. This additional collateral load shall be a minimum of 37kg/Square Meter at the roof.

5. In addition to support of the required loads, the design shall consider the behavior of the structure to ensure serviceability. Limiting values of structural behavior shall be chosen with the due regard to the service conditions and intended function of the structure. Structural behaviors to consider include:

   a. Expansion and contraction.
   b. Deflection Limits: Engineer assemblies to withstand design loads with deflections no greater than the following:

      1) Purlins and Rafters: Vertical deflection of 1/180 of the span.

   c. Vibration.

d. Corrosion.
e. Design secondary framing system to accommodate deflection of primary building structure and construction tolerances, and to maintain clearances at openings.

1.5 SUBMITTALS

Government approval is required for submittals with a "G" designation; submittals not having a "G" designation are for information only. When used, a designation following the "G" designation identifies the office that will review the submittal for the Government. The following shall be submitted in accordance with Section 01330 SUBMITTAL PROCEDURES:

SD-02 Shop Drawings

Metal Building Systems

Detail drawings consisting of catalog cuts, design and erection drawings.

SD-03 Product Data

Manufacturer's Instructions

Manufacturer's literature for individual building component systems.

Qualifications

Qualifications of the manufacturer, and qualifications and experience of the building erector. A brief list of locations where buildings of similar design have been used shall be included with the detail drawings and shall also include information regarding date of completion, name and address of owner, and how the structure is used.

SD-07 Certificates

Metal Building Systems

a. A Certificate from the metal building manufacturer stating that the metal building was designed in accordance with MBMA MBSM.

b. Mill certification for structural bolts, framing steel, roofing and siding, and steel wall liner panels.

c. Warranty certificate. At the completion of the project the Contractor shall furnish signed copies of the 5 year Warranty for Metal Building Roof System, a sample copy of which is attached to this section, the 20-year Manufacturer's Material Warranties, and the Manufacturer's 20-year System Weathertightness Warranty where one is required.

Insulation

Certificate attesting that the polyisocyanurate insulation furnished for the project contains recovered material, and showing an estimated percent of such recovered material.

1.6 DELIVERY, STORAGE, AND HANDLING

Deliver components, sheets, panels, and other manufactured items so as not to be damaged or deformed. Package metal panels for protection during transportation and handling.

1.7 PROJECT CONDITIONS

Weather Limitations: Proceed with installation only when weather conditions permit metal panels to be installed according to manufacturers' written instructions and warranty requirements.

1.8 COORDINATION

Coordinate size and location of concrete foundations and casting of anchor-bolt inserts into foundation walls and footings. Concrete, reinforcement, and formwork requirements are specified in Division 3 Section "Cast-in-Place Concrete."

PART 2 PRODUCTS

2.1 STRUCTURAL FRAMING MATERIALS

A. W-Shapes: ASTM A 992/A 992M; ASTM A 572/A 572M; or ASTM A 529/A 529M.

B. Channels, Angles, M-Shapes, and S-Shapes: ASTM A 36/A 36M; ASTM A 572/A 572M; or ASTM A 529/A 529M.

C. Plate and Bar: ASTM A 36/A 36M; ASTM A 572/A 572M; or ASTM A 529/A 529M.

D. Structural-Steel Sheet: Hot-rolled, ASTM A 1011/A 1011M, Structural Steel (SS), Grades 205 through 380, or High-Strength Low Alloy Steel (HSLAS), Grades 310 through 480; or cold-rolled, ASTM A 1008/A 1008M, Structural Steel (SS), Grades 170 through 550, or High-Strength Low Alloy Steel (HSLAS), Grades 310 through 480.

E. Metallic-Coated Steel Sheet Prepainted with Coil Coating: Steel sheet metallic coated by the hot-dip process and prepainted by the coil-coating process to comply with ASTM A 755/A 755M.

1. Aluminum-Zinc Alloy-Coated Steel Sheet: ASTM A 792/A 792M, Structural Steel (SS), Grade 340 or 550; with Class AZM150 coating.

F. Non-High-Strength Bolts, Nuts, and Washers: Manufacturer's standard hex-head bolts; carbon-steel hex nuts; and plain (flat) steel washers.

1. Finish: Hot-dip zinc coating, manufacturer's standard.

G. High-Strength Bolts, Nuts, and Washers: ASTM A 325M, Type 1, heavy hex steel structural bolts; heavy hex carbon-steel nuts; and hardened carbon-steel washers.

1. Finish: Hot-dip zinc coating, manufacturer's standard.
2. Tension-Control, High-Strength Bolt-Nut-Washer Assemblies: manufacturer's standard heavy-hex-head steel structural bolts with splined ends.

a. Finish: Mechanically deposited zinc coating, manufacturer's

standard .

H. Unheaded Anchor Rods: ASTM A 572/A 572M, Grade 345.

1. Configuration: Straight.
2. Nuts: Manufacturer's standard hex carbon steel.
3. Plate Washers: Manufacturer's standard carbon steel.
4. Washers: Manufacturer's standard hardened carbon steel.
5. Finish: Hot-dip zinc coating, manufacturer's standard.

I. Headed Anchor Rods: ASTM F 1554, Grade 36, straight.

1. Nuts: Manufacturer's standard hex carbon steel.
2. Plate Washers: Manufacturer's standard carbon steel.
3. Washers: Manufacturer's standard hardened carbon steel.
4. Finish: Hot-dip zinc coating, manufacturer's standard.

J. Threaded Rods: ASTM A 572/A 572M, Grade 345 .

1. Nuts: Manufacturer's standard hex carbon steel.
2. Washers: Manufacturer's standard carbon steel.
3. Finish: Hot-dip zinc coating, Manufacturer's standard.

K. Primer: Manufacturer's standard red oxide.

2.2 MATERIALS FOR FIELD ASSEMBLED METAL PANELS

A. Metallic-Coated Steel Sheet with Coating: Steel sheet metallic coated by the hot-dip process.

1. Aluminum-Zinc Alloy-Coated Steel Sheet: ASTM A 792/A 792M, Structural Steel (SS), Grade 340 or 550; with Class AZM150 coating designation.
2. Surface: Smooth, flat finish.
3. Exposed Finishes: Manufacturers standard prepainted finish.

2.3 THERMAL INSULATION FOR FIELD ASSEMBLIED METAL PANELS

A. Mineral-Fiber-Blanket Insulation: ASTM C 665, type indicated below; consisting of fibers manufactured from glass.

1. Type III (blankets with reflective membrane covering), Category 1 (membrane is a vapor retarder), Class A (membrane-faced surface with a flame-spread index of 25 or less). Insulation shall have a minumum thickness of 150 mm and a density of 16 kg/m3.

B. Vapor-Retarder Facing: ASTM C 1136, with permeance not greater than 1.15 ng/Pa x s x sq. m.

1. Composition: White metallized-polypropylene film facing, fiberglass scrim reinforcement, and kraft-paper backing.

C. Retainer Strips: 0.5-mm- thick, formed, galvanized steel or PVC retainer clips colored to match insulation facing.

D. Vapor-Retarder Tape: Pressure-sensitive tape of type recommended by vapor-retarder manufacturer for sealing joints and penetrations in vapor retarder.

2.4 MISCELLANEOUS MATERIALS

A. Fasteners: Self-tapping screws, bolts, nuts, self-locking rivets and bolts, end-welded studs, and other suitable fasteners designed to withstand design loads. Provide fasteners with heads matching color of materials being fastened by means of plastic caps or factory-applied coating.

1. Fasteners for Metal Panels: Self-drilling Type 410 stainless-steel or self-tapping Type 304 stainless-steel or zinc-alloy-steel hex washer head, with EPDM or PVC washer under heads of fasteners bearing on weather side of metal panels.
2. Fasteners for Flashing and Trim: Blind fasteners or self-drilling screws with hex washer head.
3. Blind Fasteners: High-strength aluminum or stainless-steel rivets.

B. Bituminous Coating: Cold-applied asphalt mastic, compounded for 0.4-mm dry film thickness per coat. Provide inert-type noncorrosive compound free of asbestos fibers, sulfur components, and other deleterious impurities.

C. Nonmetallic, Shrinkage-Resistant Grout: Factory-packaged, nonmetallic aggregate grout, noncorrosive, nonstaining, mixed with water to consistency suitable for application and a 30-minute working time.

2.5 FABRICATION, GENERAL

A. General: Design components and field connections required for erection to permit easy assembly.

1. Mark each piece and part of the assembly to correspond with previously prepared erection drawings, diagrams, and instruction manuals.
2. Fabricate structural framing to produce clean, smooth cuts and bends. Punch holes of proper size, shape, and location. Members shall be free of cracks, tears, and ruptures.

B. Tolerances: Comply with "MBMA MBSM": Chapter IV, Section 9, "Fabrication and Erection Tolerances."

2.6 STRUCTURAL FRAMING

A. General:

1. Primary Framing: Shop fabricate framing components to indicated size and section with baseplates, bearing plates, stiffeners, and other items required for erection welded into place. Cut, form, punch, drill, and weld framing for bolted field assembly.

a. Make shop connections by welding or by using high-strength bolts.
b. Join flanges to webs of built-up members by a continuous submerged arc-welding process.
c. Brace compression flange of primary framing with steel angles or cold-formed structural tubing between frame web and purlin or girt web, so flange compressive strength is within allowable limits for any combination of loadings.
d. Weld clips to frames for attaching secondary framing members.
e. Shop Priming: Prepare surfaces for shop priming according to

SSPC-SP 2. Shop prime primary structural members with specified primer after fabrication.

2. Secondary Framing: Shop fabricate framing components to indicated size and section by roll-forming or break-forming, with baseplates, bearing plates, stiffeners, and other plates required for erection welded into place. Cut, form, punch, drill, and weld secondary framing for bolted field connections to primary framing.

   a. Make shop connections by welding or by using non-high-strength bolts.
   b. Shop Priming: Prepare uncoated surfaces for shop priming according to SSPC-SP 2. Shop prime uncoated secondary structural members with specified primer after fabrication.

B. Primary Framing: Manufacturer's standard structural primary framing system, designed to withstand required loads and specified requirements. Primary framing includes transverse and lean-to frames; rafter, rake, and canopy beams; sidewall, intermediate, end-wall, and corner columns; and wind bracing.

1. General: Provide frames with attachment plates, bearing plates, and splice members. Factory drill for field-bolted assembly. Provide frame span and spacing indicated.
2. Rigid Clear-Span Frames: I-shaped frame sections fabricated from shop-welded, built-up steel plates or structural-steel shapes. Interior columns are not permitted.
3. Frame Configuration: Single gable.
4. Exterior Column Type: Uniform depth or tapered, as standard with manufacturer.
5. Rafter Type: Uniform depth or tapered, as standard with manufacturer.

C. Secondary Framing: Manufacturer's standard secondary framing members, including purlins, girts, eave struts, flange bracing, base members, gable angles, clips, headers, jambs, and other miscellaneous structural members. Fabricate framing from cold-formed, structural-steel sheet or roll-formed, metallic-coated steel sheet prepainted with coil coating, unless otherwise indicated, to comply with the following:

1. Purlins: C- or Z-shaped sections; fabricated from minimum 1.5-mm-thick steel sheet, built-up steel plates, or structural-steel shapes; minimum 64-mm- wide flanges.

   a. Depth: As required to comply with system performance requirements.

2. Eave Struts: Unequal-flange, C-shaped sections; fabricated from 1.5-mm- thick steel sheet, built-up steel plates, or structural-steel shapes; to provide adequate backup for metal panels.
3. Sag Bracing: Minimum 25-by-25-by-3-mm structural-steel angles or rods.
4. Purlin Clips: Minimum 1.5-mm- thick, steel sheet. Provide galvanized clips where clips are connected to galvanized framing members.
5. Miscellaneous Structural Members: Manufacturer's standard sections fabricated from cold-formed, structural-steel sheet; built-up steel plates; or zinc-coated (galvanized) steel sheet;

designed to withstand required loads.

D. Bracing: Provide adjustable wind bracing as follows:

1. Rods: ASTM A 36/A 36M; ASTM A 572/A 572M; or ASTM A 529/A 529M; minimum 13-mm- diameter steel; threaded full length or threaded a minimum of 152 mm at each end.
2. Cable: ASTM A 475, 6-mm- diameter, extra-high-strength grade, Class B zinc-coated, 7-strand steel; with threaded end anchors.
3. Angles: Fabricated from structural-steel shapes to match primary framing, of size required to withstand design loads.
4. Bracing: Provide wind bracing using any method specified above, at manufacturer's option.

E. Bolts: Provide plain finish bolts for structural-framing components that are primed or finish painted. Provide hot-dipped galvanized bolts for structural-framing components that are galvanized.

F. Factory-Primed Finish: Apply specified primer immediately after cleaning and pretreating.

1. Prime primary, secondary, and end-wall structural-framing members to a minimum dry film thickness of 0.025 mm.

   a. Prime secondary steel framing formed from uncoated steel sheet to a minimum dry film thickness of 0.013 mm on each side.

2. Prime galvanized members with specified primer, after phosphoric acid pretreatment.

2.7 METAL ROOF PANELS

A. Tapered-Rib-Profile: Formed with raised, trapezoidal major ribs and intermediate stiffening ribs symmetrically spaced between major ribs; designed to be field assembled by lapping side edges of adjacent panels and mechanically attaching panels to supports using exposed fasteners in side laps.

1. Material: Aluminum-zinc alloy-coated steel sheet, 24 gage (0.70 mm) thick.
   a. Exterior Finish: Polyester.
2. Major-Rib Spacing: As standard with manufacturer.
3. Panel Coverage: As standard with manufacturer.
4. Panel Height: As standard with manufacturer.

2.8 METAL SOFFIT PANELS

A. General: Provide factory-formed metal soffit panels designed to be field assembled by lapping and interconnecting side edges of adjacent panels and mechanically attaching through panel to supports using concealed fasteners and factory-applied sealant in side laps. Include accessories required for weathertight installation. Factory prime interior face of panel and paint per Section 09900.

B. Metal Soffit Panels: Match profile and material of metal roof panels.

1. Finish: Match finish and color of metal roof panels.

2.9 ACCESSORIES

A. General: Provide accessories as standard with metal building system manufacturer and as specified. Fabricate and finish accessories at the factory to greatest extent possible, by manufacturer's standard procedures and processes. Comply with indicated profiles and with dimensional and structural requirements.

1. Form exposed sheet metal accessories that are without excessive oil canning, buckling, and tool marks and that are true to line and levels indicated, with exposed edges folded back to form hems.

B. Roof Panel Accessories: Provide components required for a complete metal roof panel assembly including copings, fasciae, corner units, ridge closures, clips, sealants, gaskets, fillers, closure strips, and similar items. Match material and finish of metal roof panels, unless otherwise indicated.

1. Closures: Provide closures at eaves and ridges, fabricated of same material as metal roof panels.
2. Clips: Manufacturer's standard, formed from steel sheet, designed to withstand negative-load requirements.
3. Cleats: Manufacturer's standard, mechanically seamed cleats formed from steel sheet.
4. Backing Plates: Provide metal backing plates at panel end splices, fabricated from material recommended by manufacturer.
5. Closure Strips: Closed-cell, expanded, cellular, rubber or crosslinked, polyolefin-foam or closed-cell laminated polyethylene; minimum 25-mm thick, flexible closure strips; cut or premolded to match metal roof panel profile. Provide closure strips where indicated or necessary to ensure weathertight construction.
6. Thermal Spacer Blocks: Where metal panels attach directly to purlins, provide thermal spacer blocks of thickness required to provide 25 mm standoff; fabricated from extruded polystyrene.

C. Flashing and Trim: Formed from minimum 0.40-mm thick, metallic-coated steel sheet or aluminum-zinc alloy-coated steel sheet prepainted with coil coating; finished to match adjacent metal panels.

1. Provide flashing and trim as required to seal against weather and to provide finished appearance. Locations include, but are not limited to, eaves, rakes, corners, bases, framed openings, ridges, fasciae, and fillers.

D. Gutters: Formed from minimum 0.40-mm thick, metallic-coated steel sheet or aluminum-zinc alloy-coated steel sheet prepainted with coil coating; finished to match roof fascia and rake trim. Match profile of gable trim, complete with end pieces, outlet tubes, and other special pieces as required. Fabricate in minimum 2438-mm long sections, sized according to SMACNA's "Architectural Sheet Metal Manual."

1. Gutter Supports: Fabricated from same material and finish as gutters; spaced 900 mm o.c.
2. Strainers: Bronze, copper, or aluminum wire ball type at outlets.

E. Downspouts: Formed from 0.4-mm thick, zinc-coated (galvanized) steel sheet or aluminum-zinc alloy-coated steel sheet prepainted with coil coating; finished to match metal wall panels. Fabricate in minimum 3 m

long sections, complete with formed elbows and offsets.

1. Mounting Straps: Fabricated from same material and finish as gutters; spaced 3 m o.c.

F. Roof Ventilators: Gravity type, complete with hardware, flashing, closures, and fittings.

1. Continuous or Sectional-Ridge Type: Factory-engineered and -fabricated, continuous unit; fabricated from minimum 0.4-mm thick, metallic-coated steel sheet or aluminum-zinc alloy-coated steel sheet prepainted with coil coating; finished to match metal roof panels. Fabricated in minimum 3-m long sections. Provide throat size and total length indicated, complete with side baffles, ventilator assembly, end caps, splice plates, and reinforcing diaphragms.

a. Bird Screening: Galvanized steel, 13-mm square mesh, 1.04-mm wire, or aluminum, 13-mm square mesh, 1.6-mm wire.
b. Dampers: Manually operated, spring-loaded, vertically rising type; chain and worm gear operator; with chain of length required to reach within 914 mm above floor.
c. Throat Size: 229 or 305 mm, as standard with manufacturer, and as required to comply with ventilation requirements.

2.10 FINISHES, GENERAL

A. Appearance of Finished Work: Variations in appearance of abutting or adjacent pieces are acceptable if they are within one-half of the range of approved Samples. Noticeable variations in the same piece are not acceptable. Variations in appearance of other components are acceptable if they are within the range of approved Samples and are assembled or installed to minimize contrast.

PART 3 EXECUTION

3.1 EXAMINATION

A. Examine substrates, areas, and conditions, with Erector present, for compliance with requirements for installation tolerances and other conditions affecting performance of work.

B. Before erection proceeds, survey elevations and locations of concrete- and masonry-bearing surfaces and locations of anchor rods, bearing plates, and other embedments to receive structural framing, with Erector present, for compliance with requirements and metal building system manufacturer's tolerances.

C. Proceed with erection only after unsatisfactory conditions have been corrected.

3.2 PREPARATION

A. Clean and prepare surfaces to be painted according to manufacturer's written instructions for each particular substrate condition.

B. Provide temporary shores, guys, braces, and other supports during erection to keep structural framing secure, plumb, and in alignment against temporary construction loads and loads equal in intensity to

design loads. Remove temporary supports when permanent structural framing, connections, and bracing are in place, unless otherwise indicated.

3.3 ERECTION OF STRUCTURAL FRAMING

A. Erect metal building system according to manufacturer's written erection instructions and erection drawings.

B. Do not field cut, drill, or alter structural members without written approval from metal building system manufacturer's professional engineer.

C. Set structural framing accurately in locations and to elevations indicated and according to AISC specifications referenced in this Section. Maintain structural stability of frame during erection.

D. Base and Bearing Plates: Clean concrete- and masonry-bearing surfaces of bond-reducing materials, and roughen surfaces prior to setting plates. Clean bottom surface of plates.

1. Set plates for structural members on wedges, shims, or setting nuts as required.
2. Tighten anchor rods after supported members have been positioned and plumbed. Do not remove wedges or shims but, if protruding, cut off flush with edge of plate before packing with grout.
3. Promptly pack grout solidly between bearing surfaces and plates so no voids remain. Neatly finish exposed surfaces; protect grout and allow to cure. Comply with manufacturer's written installation instructions for shrinkage-resistant grouts.

E. Align and adjust structural framing before permanently fastening. Before assembly, clean bearing surfaces and other surfaces that will be in permanent contact with framing. Perform necessary adjustments to compensate for discrepancies in elevations and alignment.

1. Level and plumb individual members of structure.
2. Make allowances for difference between temperature at time of erection and mean temperature when structure will be completed and in service.

F. Primary Framing: Erect framing true to line, level, plumb, rigid, and secure. Level baseplates to a true even plane with full bearing to supporting structures, set with double-nutted anchor bolts. Use grout to obtain uniform bearing and to maintain a level base-line elevation. Moist cure grout for not less than seven days after placement.

1. Make field connections using high-strength bolts installed according to RCSC's "Specification for Structural Joints Using ASTM A 325 or A 490 Bolts" for type of bolt and type of joint specified.

a. Joint Type: Snug tightened or pretensioned.

G. Secondary Framing: Erect framing true to line, level, plumb, rigid, and secure. Fasten secondary framing to primary framing using clips with field connections using non-high-strength bolts.

1. Provide rake or gable purlins with tight-fitting closure channels

and fasciae.
2. Provide supplemental framing at entire perimeter of openings, including doors, windows, louvers, ventilators, and other penetrations of roof.

H. Bracing: Install bracing in roof where indicated on erection drawings.

1. Tighten rod and cable bracing to avoid sag.
2. Locate interior end-bay bracing only where indicated.

I. Framing for Openings: Provide shapes of proper design and size to reinforce openings and to carry loads and vibrations imposed, including equipment furnished under mechanical and electrical work. Securely attach to structural framing.

J. Erection Tolerances: Maintain erection tolerances of structural framing within AISC's "Code of Standard Practice for Steel Buildings and Bridges."

3.4 METAL PANEL INSTALLATION, GENERAL

A. Examination: Examine primary and secondary framing to verify that structural panel support members and anchorages have been installed within alignment tolerances required by manufacturer.

1. Examine roughing-in for components and systems penetrating metal panels to verify actual locations of penetrations relative to seam locations of metal panels before metal panel installation.

B. General: Anchor metal panels and other components of the Work securely in place, with provisions for thermal and structural movement.

1. Field cut metal panels as required for doors, windows, and other openings. Cut openings as small as possible, neatly to size required, and without damage to adjacent metal panel finishes.

   a. Field cutting of metal panels by torch is not permitted unless approved in writing by manufacturer.

2. Install metal panels perpendicular to structural supports, unless otherwise indicated.
3. Flash and seal metal panels with weather closures at perimeter of openings and similar elements. Fasten with self-tapping screws.
4. Locate and space fastenings in uniform vertical and horizontal alignment.
5. Locate metal panel splices over, but not attached to, structural supports with end laps in alignment. Stagger panel splices and end laps to avoid a four-panel lap splice condition.
6. Lap metal flashing over metal panels to allow moisture to run over and off the material.

C. Lap-Seam Metal Panels: Install screw fasteners with power tools having controlled torque adjusted to compress neoprene washer tightly without damage to washer, screw threads, or metal panels. Install screws in predrilled holes.

1. Arrange and nest side-lap joints so prevailing winds blow over, not into, lapped joints. Lap ribbed or fluted sheets one full rib corrugation. Apply metal panels and associated items for neat and

weathertight enclosure. Avoid "panel creep" or application not true to line.

D. Metal Protection: Where dissimilar metals will contact each other or corrosive substrates, protect against galvanic action by painting contact surfaces with bituminous coating, by applying rubberized-asphalt underlayment to each contact surface, or by other permanent separation as recommended by metal roof panel manufacturer.

3.5 METAL ROOF PANEL INSTALLATION

A. General: Provide metal roof panels of full length from eave to ridge, unless otherwise indicated or restricted by shipping limitations.

1. Install ridge caps as metal roof panel work proceeds.
2. Flash and seal metal roof panels with weather closures at eaves and rakes. Fasten with self-tapping screws.

B. Field-Assembled, Standing-Seam Metal Roof Panels: Fasten metal roof panels to supports with concealed clips at each standing-seam joint at location, spacing, and with fasteners recommended by manufacturer.

1. Install clips to supports with self-tapping fasteners.
2. Install pressure plates at locations indicated in manufacturer's written installation instructions.
3. Snap Joint: Nest standing seams and fasten together by interlocking and completely engaging factory-applied sealant.
4. Rigidly fasten eave end of metal roof panels and allow ridge end free movement due to thermal expansion and contraction. Predrill panels for fasteners.
5. Provide metal closures at peaksandeach side of ridge caps.

C. Field-Assembled, Lap-Seam Metal Roof Panels: Fasten metal roof panels to supports with exposed fasteners at each lapped joint at location and spacing recommended by manufacturer.

1. Provide metal-backed washers under heads of exposed fasteners bearing on weather side of metal roof panels.
2. Provide sealant tape at lapped joints of metal roof panels and between panels and protruding equipment, vents, and accessories.
3. Apply a continuous ribbon of sealant tape to weather-side surface of fastenings on end laps and on side laps of nesting-type metal panels; on side laps of ribbed or fluted metal panels; and elsewhere as needed to make metal panels weatherproof to driving rains.
4. At metal panel splices, nest panels with minimum 152-mm end lap, sealed with butyl-rubber sealant and fastened together by interlocking clamping plates.

D. Metal Fascia Panels: Align bottom of metal panels and fasten with blind rivets, bolts, or self-tapping screws. Flash and seal metal panels with weather closures where fasciae meet soffits, along lower panel edges, and at perimeter of all openings.

E. Metal Roof Panel Installation Tolerances: Shim and align metal roof panels within installed tolerance of 6 mm in 6 m on slope and location lines as indicated and within 3-mm offset of adjoining faces and of alignment of matching profiles.

3.6 THERMAL INSULATION INSTALLATION FOR FIELD ASSEMBLED METAL PANELS

A. General: Install insulation concurrently with metal panel installation, in thickness indicated to cover entire surface, according to manufacturer's written instructions.

1. Set vapor-retarder-faced units with vapor retarder to warm side of construction, unless otherwise indicated. Do not obstruct ventilation spaces, except for firestopping.
2. Tape joints and ruptures in vapor retarder, and seal each continuous area of insulation to surrounding construction to ensure airtight installation.
3. Install factory-laminated, vapor-retarder-faced blankets straight and true in one-piece lengths with both sets of facing tabs sealed to provide a complete vapor retarder.

B. Blanket Roof Insulation: Install insulation in metal building manufacturer's standard fashion.

1. Retainer Strips: Install retainer strips at each longitudinal insulation joint, straight and taut, nesting with secondary framing to hold insulation in place.

3.7 ACCESSORY INSTALLATION

A. General: Install accessories with positive anchorage to building and weathertight mounting, and provide for thermal expansion. Coordinate installation with flashings and other components.

1. Install components required for a complete metal roof panel assembly including trim, copings, ridge closures, seam covers, flashings, sealants, gaskets, fillers, closure strips, and similar items.
2. Install components for a complete metal wall panel assembly including trim, copings, corners, seam covers, flashings, sealants, gaskets, fillers, closure strips, and similar items.
3. Where dissimilar metals will contact each other or corrosive substrates, protect against galvanic action by painting contact surfaces with bituminous coating, by applying rubberized-asphalt underlayment to each contact surface, or by other permanent separation as recommended by manufacturer.

B. Flashing and Trim: Comply with performance requirements, manufacturer's written installation instructions, and SMACNA Arch. Manual. Provide concealed fasteners where possible, and set units true to line and level as indicated. Install work with laps, joints, and seams that will be permanently watertight and weather resistant.

1. Install exposed flashing and trim that is without excessive oil canning, buckling, and tool marks and that is true to line and levels indicated, with exposed edges folded back to form hems. Install sheet metal flashing and trim to fit substrates and to result in waterproof and weather-resistant performance.
2. Expansion Provisions: Provide for thermal expansion of exposed flashing and trim. Space movement joints at a maximum of 3 m with no joints allowed within 600 mm of corner or intersection. Where lapped or bayonet-type expansion provisions cannot be used or would not be sufficiently weather resistant and waterproof, form

expansion joints of intermeshing hooked flanges, not less than 25 mm deep, filled with mastic sealant (concealed within joints).

C. Gutters: Join sections with riveted and soldered or lapped and sealed joints. Attach gutters to eave with gutter hangers spaced not more than 1.2 m o.c. using manufacturer's standard fasteners. Provide end closures and seal watertight with sealant. Provide for thermal expansion.

D. Downspouts: Join sections with 38-mm telescoping joints. Provide fasteners designed to hold downspouts securely 25 mm away from walls; locate fasteners at top and bottom and at approximately 1500 mm o.c. in between.

1. Provide elbows at base of downspouts to direct water away from building.
2. Tie downspouts to underground drainage system indicated.

E. Continuous Roof Ventilators: Set ventilators complete with necessary hardware, anchors, dampers, weather guards, rain caps, and equipment supports. Join sections with splice plates and end-cap skirt assemblies where required to achieve indicated length. Install preformed filler strips at base to seal ventilator to metal roof panels.

3.8 ADJUSTING

Roof Ventilators : After completing installation, including work by other trades, lubricate, test, and adjust units to operate easily, free of warp, twist, or distortion as needed to provide fully functioning units.

3.9 CLEANING AND PROTECTION

A. Repair damaged galvanized coatings on galvanized items with galvanized repair paint according to manufacturer's written instructions.

B. Touchup Painting: After erection, promptly clean, prepare, and prime or reprime field connections, rust spots, and abraded surfaces of prime-painted structural framing, bearing plates, and accessories.

1. Clean and prepare surfaces by SSPC-SP 2, "Hand Tool Cleaning," or SSPC-SP 3, "Power Tool Cleaning."
2. Apply a compatible primer of same type as shop primer used on adjacent surfaces.

C. Touchup Painting: Cleaning and touchup painting are specified in Division 9 painting Section.

-- End of Section --

SECTION 13202

FUEL STORAGE SYSTEMS

PART 1 GENERAL

1.1 REFERENCES

The publications listed below form a part of this specification to the extent referenced. The publications are referred to within the text by the basic designation only.

AMERICAN ASSOCIATION OF STATE HIGHWAY AND TRANSPORTATION OFFICIALS (AASHTO)

AASHTO HB-17	(2002; Errata 2003; Errata 2005) Standard Specifications for Highway Bridges

AMERICAN PETROLEUM INSTITUTE (API)

API RP 1110	(1997) Pressure Testing of Liquid Petroleum Pipelines
API Spec 1581	(2002) Specifications and Qualification Procedures for Aviation Jet Fuel Filter/Separators
API Spec 5L	(2004) Specification for Line Pipe
API Spec 6D	(2002; Errata 2005) Specification for Pipeline Valves
API Spec 6FA	(1999; Errata 2006) Specification for Fire Test for Valves
API Std 1631	(2001) Interior Lining and Periodic Inspection of Underground Storage Tanks
API Std 594	(2004) Check Valves: Wafer, Wafer-Lug and Double-Flanged Type
API Std 607	(2005) Fire Test for Soft-Seated Quarter-Turn Valves
API Std 610	(2004) Centrifugal Pumps for Petroleum, Petrochemical, and Natural Gas Industries

AMERICAN WATER WORKS ASSOCIATION(AWWA)

AWWA C203	(2002) Coal-Tar Protective Coatings and Linings for Steel Water Pipelines - Enamel and Tape - Hot-Applied

AMERICAN WELDING SOCIETY (AWS)

AWS A5.1/A5.1M	(2004; Errata 2004) Carbon Steel

	Electrodes for Shielded Metal Arc Welding
AWS A5.4/A5.4M	(2006) Stainless Steel Electrodes for Shielded Metal Arc Welding

ASME INTERNATIONAL (ASME)

ASME B16.11	(2005) Forged Fittings, Socket-Welding and Threaded
ASME B16.21	(2005) Nonmetallic Flat Gaskets for Pipe Flanges
ASME B16.34	(2004) Valves - Flanged, Threaded and Welding End
ASME B16.39	(1998) Malleable Iron Threaded Pipe Unions, Classes 150, 250 and 300
ASME B16.5	(2003) Pipe Flanges and Flanged Fittings, NPS 1/2 Through NPS 24 Metric/Inch Standard
ASME B16.9	(2003) Factory-Made Wrought Buttwelding Fittings
ASME B31.3	(2004) Process Piping
ASME B40.100	(2006) Pressure Gauges and Gauge Attachments
ASME BPVC SEC IX	(2004; 2005 Addenda; 2006 Addenda) Boiler and Pressure Vessel Code; Section IX, Welding and Brazing Qualifications
ASME BPVC SEC VIII D1	(2004; 2005 Addenda; 2006 Addenda) Boiler and Pressure Vessel Code; Section VIII, Pressure Vessels Division 1 - Basic Coverage

ASTM INTERNATIONAL (ASTM)

ASTM A 167	(1999; R 2004) Stainless and Heat-Resisting Chromium-Nickel Steel Plate, Sheet, and Strip
ASTM A 181/A 181M	(2006) Carbon Steel Forgings, for General-Purpose Piping
ASTM A 182/A 182M	(2006) Forged or Rolled Alloy-Steel Pipe Flanges, Forged Fittings, and Valves and Parts for High-Temperature Service
ASTM A 193/A 193M	(2006a) Alloy-Steel and Stainless Steel Bolting Materials for High-Temperature Service
ASTM A 194/A 194M	(2006a) Carbon and Alloy Steel Nuts for Bolts for High Pressure or High Temperature Service or Both

ASTM A 216/A 216M	(2004) Steel Castings, Carbon, Suitable for Fusion Welding, for High-Temperature Service
ASTM A 234/A 234M	(2006a) Piping Fittings of Wrought Carbon Steel and Alloy Steel for Moderate and High Temperature Service
ASTM A 27/A 27M	(2005) Steel Castings, Carbon, for General Application
ASTM A 276	(2006) Stainless Steel Bars and Shapes
ASTM A 307	(2004e1) Carbon Steel Bolts and Studs, 60 000 PSI Tensile Strength
ASTM A 36/A 36M	(2005) Carbon Structural Steel
ASTM A 53/A 53M	(2006a) Pipe, Steel, Black and Hot-Dipped, Zinc-Coated, Welded and Seamless
ASTM A 733	(2003) Welded and Seamless Carbon Steel and Austenitic Stainless Steel Pipe Nipples
ASTM A 743/A 743M	(2006) Castings, Iron-Chromium, Iron-Chromium-Nickel, Corrosion Resistant, for General Application
ASTM B 26/B 26M	(2005) Aluminum-Alloy Sand Castings
ASTM B 687	(1999; R 2005e1) Brass, Copper, and Chromium-Plated Pipe Nipples
ASTM C 33	(2003) Concrete Aggregates
ASTM D 229	(2001) Rigid Sheet and Plate Materials Used for Electrical Insulation
ASTM D 5677	(2000) Fiberglass (Glass-Fiber-Reinforced Thermosetting-Resin) Pipe and Pipe Fittings, Adhesive Bonded Joint Type, for Aviation Jet Turbine Fuel Lines
ASTM F 1199	(1988; R 2004) Cast (All Temperatures and Pressures) and Welded Pipe Line Strainers (150 psig and 150 degrees F Maximum)
ASTM F 1200	(1988; R 2004) Fabricated (Welded) Pipe Line Strainers (Above 150 psig and 150 degrees F)
ASTM F 436M	(2004) Hardened Steel Washers (Metric)

MANUFACTURERS STANDARDIZATION SOCIETY OF THE VALVE AND FITTINGS INDUSTRY (MSS)

MSS SP-58	(2002) Pipe Hangers and Supports - Materials, Design and Manufacture

MSS SP-69	(2003) Pipe Hangers and Supports - Selection and Application

NACE INTERNATIONAL (NACE)

NACE RP0169	(2002) Control of External Corrosion on Underground or Submerged Metallic Piping Systems
NACE RP0185	(1996) Extruded, Polyolefin Resin Coating Systems with Soft Adhesives for Underground or Submerged Pipe

NATIONAL ELECTRICAL MANUFACTURERS ASSOCIATION (NEMA)

NEMA 250	(2003) Enclosures for Electrical Equipment (1000 Volts Maximum)

NATIONAL FIRE PROTECTION ASSOCIATION (NFPA)

NFPA 30	(2003; Errata 2004; Errata 2006) Flammable and Combustible Liquids Code
NFPA 30A	(2003; TIA 2003) Code for Motor Fuel Dispensing Facilities and Repair Garages
NFPA 70	(2005; TIA 2005) National Electrical Code

STEEL TANK INSTITUTE (STI)

STI F911	(1998) Standard for Diked Aboveground Storage Tanks

THE SOCIETY FOR PROTECTIVE COATINGS (SSPC)

SSPC SP 6	(2000; E 2004) Commercial Blast Cleaning

UNDERWRITERS LABORATORIES (UL)

UL 142	(2006) Steel Aboveground Tanks for Flammable and Combustible Liquids
UL 567	(2003; Rev thru Oct 2004) emergency Breakaway Fittings, Swivel Connectors and Pipe-Connection Fittings for Petroleum Products and LP-Gas
UL 913	(2002; Rev thru Aug 2004) Intrinsically Safe Apparatus and Associated Apparatus for Use in Class I, II, and III, Division 1, Hazardous (Classified) Locations

1.2 SYSTEM DESCRIPTION

The work shall include the design, fabrication and installation of the entire fuel storage and dispensing type system in conformance with pertinent federal, state, and local code requirements. The completed installation shall conform to NFPA 30 and NFPA 30A as applicable.

1.3 SUBMITTALS

Government approval is required for submittals with a "G" designation; submittals not having a "G" designation are for information only. When used, a designation following the "G" designation identifies the office that will review the submittal for the Government. The following shall be submitted in accordance with Section 01330 SUBMITTAL PROCEDURES:

SD-02 Shop Drawings

Fueling System; G AED

Detail drawings of the fueling system including a complete list of equipment and materials, as specified.

Monitoring Systems; G AED.

Detail drawings of the monitoring system including a complete list of equipment and materials, as specified.

SD-03 Product Data

Fueling System; G AED.

Manufacturer's standard catalog data, prior to the purchase or installation of the particular component, highlighted to show brand name, model number, size, options, performance charts and curves, etc., in sufficient detail to demonstrate compliance with contract requirements on all parts and equipment.

Permitting.

Copies of all required federal, state, and local permits.

Registration.

Required tank registration forms, 30 days after contract award, in order for the Contracting Officer to submit the forms to the regulatory agency.

Spare Parts Data.

Spare parts data for each different item of equipment specified.

Installation.

Manufacturer's installation instructions and procedures on all parts and equipment.

Framed Instructions.

Framed instructions for posting, at least 2 weeks prior to construction completion.

Monitoring Systems.

System diagrams for posting, at least 2 weeks prior to construction completion, including distance markings so that alarm

indications can be correlated to leak location in plan view if a cable detection system is used. The diagrams shall include a piping and wiring display map with schematic diagrams from the leak detection system manufacturer. The diagrams shall be framed under glass or laminated plastic and be posted where indicated by the Contracting Officer.

Filter-Separator Factory Tests.

A schedule, at least 2 weeks prior to the factory tests, which identifies the date, time, and location for the tests.

Tests.

A letter, at least 10 working days in advance of each test, advising the Contracting Officer of the test. Individual letters shall be provided for each test specified herein.

Demonstrations; G AED.

A letter, at least 14 working days prior to the proposed training date, scheduling a proposed date for conducting the onsite training.

Experience.

A letter listing prior projects, the date of construction, a point of contact for each prior project, the scope of work of each prior project, and a detailed list of work performed. The letter shall also provide evidence of prior manufacturer's training, state licensing, and other related information.

Welding.

A letter listing the qualifying procedures for each welder. The letter shall include supporting data such as test procedures used, what was tested to, etc., and a list of the names of all qualified welders and their identification symbols.

Verification of Dimensions.

A letter stating the date the site was visited and a listing of all discrepancies found.

Fuel Supply.

A letter, at least 30 days prior to fuel delivery, stating the amount of fuel required for testing, flushing, cleaning, or startup of the system. The letter shall define the required dates of each fuel delivery necessary.

Exterior Coating for Belowground Steel Piping.

Certification, prior to performing the exterior coating tests, from the tester manufacturer of the electric holiday detector's latest calibration date and crest voltage testing.

SD-06 Test Reports

Filter-Separator Factory Tests; G AED.

Copies of the report in bound letter-size booklets. Report shall certify compliance with the testing and qualification procedures defined in API Spec 1581. The report shall contain complete records of the tests including data sheets, performance curves, chronological test records, photographs, sample calculations, test procedures, and a description of the test apparatus. The report shall include color photographs of the sample elements before and after tests.

Tests; G AED.

Copies of each test containing the information described below in bound letter-size booklets. Individual reports shall be provided for the storage tank tests, the piping tests, the system performance tests, the high level alarm test, and the system leak tests. Drawings shall be folded blue lines, with the title block visible.

a. The date the tests were performed.

b. A list of equipment used, with calibration certifications.

c. A copy of measurements taken.

d. The parameters to be verified.

e. The condition specified for the parameter.

f. The inspection results, signed, dated, and certified by the installer. The certification shall state that required procedures were accomplished, that the procedures were conducted in compliance with the plans and specifications.

g. A description of adjustments performed.

SD-10 Operation and Maintenance Data

Operation and Maintenance Manuals.

Complete copies of operation manuals in bound letter-size booklets listing step-by-step procedures required for system startup, operation, and shutdown at least two weeks prior to the demonstrations. The manuals shall include the manufacturer's name, model number, service manual, a brief description of each piece of equipment, and the basic operating features of each piece of equipment. The manuals shall include procedures necessary for annual tightness testing of the storage tanks and secondary containment piping.

Complete copies of maintenance manuals in bound letter-size booklets listing routine maintenance procedures, possible breakdowns and repairs, and a trouble shooting guide at least 2 weeks prior to the demonstrations. The manuals shall include piping, equipment layouts, and simplified wiring and control diagrams of the system as installed.

1.4 QUALIFICATIONS

1.4.1 Experience

Each installation Contractor shall have successfully completed at least 3 projects of the same scope and the same size or larger within the last 6 years. Each installation Contractor shall demonstrate specific installation experience in regard to the specific system installation to be performed. Each installation Contractor shall have taken, if applicable, manufacturer's training courses on the installation of piping, leak detection, and tank management systems and meet the licensing requirements in the state.

1.4.2 Welding

Welding shall be in accordance with qualifying procedures using performance qualified welders and welding operators. Welding tests shall be performed at the work site. Procedures and welders shall be qualified in accordance with ASME BPVC SEC IX. Each welder or welding operator shall apply his assigned symbol near each weld he makes as a permanent record. Structural members shall be welded in accordance with Section 05 05 23.00 14 WELDING, STRUCTURAL.

1.5 REGULATORY REQUIREMENTS

1.5.1 Permitting

Contractor shall obtain necessary permits in conjunction with the installation of belowground storage tanks as required by federal, state, or local authority.

1.5.2 Registration

Contractor shall obtain and complete all required tank registration forms required by federal, state, and local authorities.

1.6 DELIVERY, STORAGE, AND HANDLING

Stored items shall be protected from the weather and contamination. Proper protection and care of material before, during, and after installation shall be the Contractor's responsibility. Any materials found to be damaged shall be replaced at the Contractor's expense. During installation, piping and similar openings shall be capped to keep out dirt and other foreign matter.

1.7 PROJECT/SITE CONDITIONS

1.7.1 Verification of Dimensions

After becoming familiar with all details of the project, the Contractor shall verify dimensions in the field, and advise the Contracting Officer of any discrepancy before performing any work.

1.7.2 Fuel Supply

Fuel required for the flushing, cleaning, and testing of materials, equipment, piping, meters, pumps, instruments, etc., as specified in this section shall be provided by the Contracting Officer. Fuel will be provided by tank trucks. The Contracting Officer will furnish the tank

trucks, operators, equipment, and services required for the tank truck operations. The Contractor shall provide the labor, equipment, appliances, and materials required for the flushing, cleaning, and testing operations. Systems shall not be flushed, cleaned, or tested with any fuel or liquid not intended for final system operation. Fuel used in the system shall remain the property of the Government. Fuel shortages not attributable to normal handling losses shall be reimbursed to the Government.

1.7.3 Safety Requirements

Exposed moving parts, parts that produce high operating temperatures and pressures, parts which may be electrically energized, and parts that may be a hazard to operating personnel shall be insulated, fully enclosed, guarded, or fitted with other types of safety devices. Safety devices shall be installed so that proper operation of equipment is not impaired.

1.7.4 Spare Parts Data

The Contractor shall submit spare parts data for each different item of equipment specified, after approval of detail drawings and not later than two (2) months prior to the date of beneficial occupancy. The data shall include a complete list of parts and supplies, with current unit prices and source of supply, a recommended spare parts list for 1 year of operation, and a list of the parts recommended by the manufacturer to be replaced on a routine basis.

1.7.5 Detail Drawings

1.7.5.1 Fueling System

The Contractor shall submit detail drawings containing the following:

a. Complete piping and wiring drawings and schematic diagrams of the overall system.

b. Equipment layout and anchorage.

c. Clearances required for maintenance and operation.

d. Any other details required to demonstrate that the system has been coordinated and will properly function as a unit.

1.7.5.2 Monitoring Systems

The Contractor shall submit detail drawings containing the following:

a. An overview drawing which details the leak detection system operation.

b. An overview drawing which details the liquid level and setpoint monitoring.

c. Wiring schematics for each part of the fueling system. The schematics shall indicate each operating device along with their normal ranges of operating values (including pressures, temperatures, voltages, currents, speeds, etc.).

d. Single line diagrams of the system.

e. Panel layout along with panel mounting and support details.

PART 2 PRODUCTS

2.1 STANDARD PRODUCTS

Materials and equipment shall be standard products of a manufacturer regularly engaged in the manufacturing of such products, which are of a similar material, design and workmanship. The standard products shall have been in satisfactory commercial or industrial use for 2 years prior to bid opening. The 2 year use shall include applications of equipment and materials under similar circumstances and of similar size. The 2 years experience shall be satisfactorily completed by a product which has been sold or is offered for sale on the commercial market through advertisements, manufacturer's catalogs, or brochures. Products having less than a 2 year field service record will be acceptable if a certified record of satisfactory field operation, for not less than 6000 hours exclusive of the manufacturer's factory tests, can be shown. Products shall be supported by a service organization. System components shall be environmentally suitable for the indicated locations. The completed installation shall conform to the applicable requirements of NFPA 30 or NFPA 30A, as applicable.

2.2 NAMEPLATES

Parts and equipment specified herein shall have an attached nameplate to list the manufacturer's name, address, component type or style, model or serial number, catalog number, capacity or size, and the system which is controlled. Plates shall be durable and legible throughout equipment life and made of stainless steel. Plates shall be fixed in prominent locations with nonferrous screws or bolts.

2.3 ELECTRICAL WORK

Electrical equipment, motors, and wiring shall be in accordance with Section 16402 INTERIOR DISTRIBUTION SYSTEM. Electrical bonding of materials shall be performed in accordance with NFPA 70.

2.4 MATERIALS IN CONTACT WITH FUEL

Galvanized materials (zinc coated) shall not be allowed in direct contact with any fuel.

2.5 ABOVEGROUND STORAGE TANK

2.5.1 Skid-Mounted Tank

Tank shall be constructed of single wall steel in accordance with NFPA 30, NFPA 30A, and UL 142. Tank shall be designed and manufactured for horizontal installation. Tank shall be mounted on the tank manufacturer's standard support skid. Skid shall span the entire length of the tank and shall separate the tank from the reinforced concrete slab by a minimum of 200 mm.

2.5.2 Secondarily Contained (Open-Top) Tank

Tank system shall include a primary storage tank and an integral open-top secondary containment reservoir. Tank system shall be in accordance with NFPA 30 and NFPA 30A. Tank system shall be designed and manufactured for

horizontal installation. Primary storage tank shall be constructed of single wall steel in accordance with UL 142. Containment reservoir shall be constructed of single-wall steel conforming to STI F911. The volume of the containment reservoir shall be greater than or equal to 110 percent of the primary tank volume. The primary storage tank shall be supported within the containment reservoir with steel tank saddles, or other similar supports, fabricated and attached by the tank manufacturer. The secondary containment reservoir shall be designed to minimize entry of rain water or blowing debris. Containment reservoir shall be equipped with a 75 mm drain that includes a full line size carbon steel drainage line and a full line size plug valve. Tank system shall be skid mounted and provided with lifting lugs which allow tank relocation.

2.5.3 Tank Exterior Protective Coating

Tank exterior protective coating shall be the manufacturer's standard except as modified herein.

2.5.4 Tank Interior Protective Coating

Tank shall be provided with an interior protective coating in accordance with API Std 1631 from the tank bottom up to 1 m off the bottom.

2.5.5 Tank Manway

Tank manway shall be provided with a manway cover and an interior tank ladder. Tank manway shall have an internal diameter of 915 mm. Tank manway shall be provided with a matching flanged watertight manway cover. Manway covers shall be constructed of cast steel in accordance with ASTM A 27/A 27M, grade 60-30 as a minimum. Manhole covers shall be for nontraffic. Pipe connections to a tank through a manway cover shall be through welded-in-place double tappered NPT couplings. Interior tank ladder shall be constructed of either fiberglass or steel. If steel, the ladder shall be completely coated in the same fashion as the interior tank bottom coating. The two stringers shall be a minimum 10 mm thick and a minimum 50 mm wide. The rungs shall be a minimum 19 mm rod on 300 mm centers. Members of the ladder shall be securely affixed. Ladder shall be of sufficient length to extend from the bottom of the tank to the top surface of the tank. Ladder shall be rigidly connected to the tank bottom in accordance with the tank manufacturer's standard. Ladder shall be connected to the top of the tank with pipe guides or slip bars to accommodate expansion of the two stringers.

2.5.6 Tank Piping Penetrations

The number and size of tank piping penetrations shall be provided as indicated. Nylon dielectric bushings shall be provided on all pipe connections to a tank. Pipe connections to a tank shall be through welded-in-place double tappered NPT couplings. The termination of fill lines within a tank shall be provided with an antisplash deflector. Tank suction line shall be provided with a footvalve to prevent line drainage.

2.5.7 Tank Cleanout and Gauge Connection

Tank shall be provided with a combination cleanout and gauge connection. The connection shall consist of a 50 mm pipe extending downward through the top of the tank to within 75 mm of the tank bottom. The entire length of pipe inside the tank shall be provided with 13 mm wide by 300 mm long slots at alternate locations. The top of the pipe shall be provided with a

bronze top-seal type adapter with a corresponding locking type cap. Tank shall have an interior striker/impact plate attached directly under the cleanout and gauge connection. The striker/impact plate shall be a minimum of 6 mm in thickness, be larger in diameter than the tank penetration, and fit the curvature of the tank bottom.

2.5.8 Tank Atmospheric Venting

Vent pipe shall be in accordance with NFPA 30, NFPA 30A, and UL 142. Vent pipe sizing shall be as indicated.

2.5.9 Tank Emergency Venting

Vent shall be the emergency venting, tank manway type designed to relieve at a 13.8 kPa pressure. Vent shall comply with NFPA 30. Each manway shall have a watertight, self-closing type manway cover.

2.5.10 Tank Overfill Alarm System

Tank shall be provided with an overfill alarm system. The system shall include a mechanically-actuated float actuator and an alarm panel. The float actuator shall be field adjustable. The alarm panel shall include an alarm light, an audible alarm, and reset capabilities. The alarm panel shall be mounted adjacent to the tank as indicated. The alarm panel shall initiate a minimum 70 decibel audible alarm when the liquid level within a tank reaches the 90 percent full level. The alarm system shall conform to the requirements of paragraph MONITORING SYSTEM.

2.6 TANK GAUGES

2.6.1 Stick Gauge

Tank shall be provided with 2 stick gauges graduated in m and mm. Stick gauge shall be of wood and treated after graduating to prevent swelling or damage from the fuel being stored.

2.6.2 Tank Calibration Charts

Tank shall be furnished with 2 copies of calibrated charts which indicate the liquid contents in L for each 3 mm of tank depth.

2.6.3 Analog Tank Gauge

Each storage tank shall be provided with an automatic analog reading gauge which is directly mounted to a tank's manway cover. Gauge shall be a level sensing, mechanically actuated device which provides the necessary readout in a sealed glass cap contained in a gauge box. Gauge shall be accurate to plus or minus 6 mm and be capable of measuring the liquid level over the full range of a tank's height. Gauge shall have vapor tight seals to prevent condensate from fogging the viewing glass.

2.6.4 Digital Tank Gauge System

Gauge shall be mechanically or electronically actuated and include a sending unit that transmits a digital signal to a liquid level electronic panel. The electronic panel shall be capable of providing a liquid level readout for each tank in terms of mm and L. Gauge shall be accurate to plus or minus 2 mm and be capable of measuring a tank's liquid level over a tank's full usable liquid level range. Gauge construction shall be

compatible with the fuel to be handled. Gauge shall be capable of measuring water accumulation in mmfrom 19 to 125 mm off the bottom of a storage tank. Gauge shall be capable of constantly sensing the fuel level in a storage tank as well as acknowledging 2 programmable liquid level setpoints. The electronic panel shall activate an audible and visual alarm when each setpoint is monitored. The 2 liquid level setpoints to be monitored shall include a tank's 90 percent liquid level (Setpoint 1) and a tank's 95 percent liquid level (Setpoint 2). The panel shall have a means of delineating between the individual setpoints and the individual tanks.

2.7 ADAPTERS AND COUPLERS

2.7.1 Tight-Fit Vapor Recovery Adapter

Adapter is applicable for gasoline, not diesel or #2 fuel.Adapter shall be bronze and be fitted with a Buna-N or Viton gasket. Adapter shall be the API standard 100 mm size. Adapter shall provide a tight-fit connection to prevent vapor emissions during filling. Adapter shall have an internal spring loaded poppet which prevents vapor emissions from the storage tank when the locking cap is removed. The poppet shall open immediately during tank fill. The poppet shall operate at a lower pressure/vacuum than the tank's pressure/vacuum relief vent in order for vapors to return to the delivery truck instead of exiting through the vent piping. The poppet, the poppet stem, and the poppet spring shall be stainless steel. The adapter shall be provided with a locking cap. The cap shall mate with the adapter and have a latching mechanism which provides a water tight seal. The cap shall provide some type of locking provision and be easily attachable and removable. The cap shall be attached to the tight-fit vapor recovery adapter by a 300 mmsection of brass cable or fuel resistant rope.

2.7.2 Dry-Break Coupler

Coupler shall be an API standard and provide a tight-fit connection to prevent vapor emissions during fuel transfer. Coupler shall be compatible with the fuel product being handled and be a female connection. Seals within the coupler shall be Buna-N or Viton. Coupler shall have an internal manually operated shutoff valve. The valve shall have an external operating handle with the valve's position (open or close) clearly labeled. The internal valve shall not be capable of being manually opened unless the coupler is properly connected to a tank truck's tight-fit adapter.

2.8 PUMPS

Pump shall conform to API Std 610, except as modified herein. Mechanical seals within the pump shall be Buna-N or Viton. Pump casing, bearing housing, and impellor shall be close grained cast iron. Pump shaft shall be stainless steel ASTM A 276 Type 410 or 416. Pump baseplate shall be of cast iron construction. Internal pump components in direct contact with the fuel to be handled shall be of compatible construction. Pump assembly shall be statically and dynamically balanced for all flow rates from no flow to 120 percent of design flow. Pump bearings shall be selected to give a minimum L-10 rating life of 25,000 hours in continuous operation. Pump shall be driven by an explosion-proof motor for Class I, Division 1, Group D hazardous locations as defined in NFPA 70. Pump shall be accessible for servicing without disturbing connecting piping. Pump control panel shall include on and off indication lights for each pump. The panel shall contain an adjustable control logic for pump operation in accordance with the indicated operation. The panel shall also have a manual override switch for each pump to allow for the activation or

deactivation of each pump. Panel, except as modified herein, shall be in accordance with Section 16402 INTERIOR DISTRIBUTION SYSTEM.

2.8.1 In-Line Centrifugal Pump

Pump shall be the in-line, split-case, double suction, single stage, self-priming, centrifugal type. Pump motor shall be mounted horizontal to the pump housing and be provided with flanged end connections.

2.8.2 Submersible Pump

Pump shall be a multi-stage vertical pump and extend inside the tank to within 150 mm of the striker/impact plate. Pump and motor combination shall operate totally submerged in the product of the storage tank. Pump fuel inlets shall be horizontal. Pump, motor, and column pipe assemble shall mount through a NPT pipe penetration in a tank's manway cover. Pump mounting shall completely support both the weight and vibration of the pump. The unit shall be provided with a steel lifting lug capable of supporting the weight of the entire pump and motor assembly. Pump shall include a vertical solid shaft motor, base mounting flange, horizontal pump discharge, low net positive suction head (NPSH) first stage impellers, dynamic and thrust balancing of impellers, and a stainless steel one piece pump shaft. Pump shall be provided with flanged end piping connections.

2.9 SUPPLEMENTAL COMPONENTS

2.9.1 Earthwork

Excavation and backfilling for tanks and piping shall be as specified in Section 02316 EXCAVATION, TRENCHING AND BACKFILLING FOR UTILITY SYSTEM, except as modified herein. Backfill for FRP tanks and pipe shall be pea gravel or crushed stone. Backfill for steel tanks and pipe, aluminum pipe, and stainless steel pipe shall be pea gravel, crushed stone, or sand.

2.9.1.1 Pea Gravel

Pea gravel shall be between 3 and 19 mm diameter.

2.9.1.2 Crushed Stone

Crushed stone shall be between 3 and 13 mm in diameter in accordance with ASTM C 33.

2.9.1.3 Sand

Sand shall be fine sand aggregate in accordance with ASTM C 33, washed and thoroughly dried, contain no more than 500 PPM chlorides, contain no more than 500 PPM sulfates, and have a pH greater than 7.

2.9.2 Piping Containment Sump

Sump shall be constructed of fiberglass reinforced plastic and be chemically compatible with the fuels to be handled. Sump shall not be connected in any way to the street manway cover or concrete above. The top of a containment sump shall be capped with a friction fit access cover. Cover shall be constructed of the same material as the sump. Cover shall have a minimum diameter of 550 mm. Cover shall be easily removable through the street manway above. Rainfall drainage from the street manhole above shall not drain into a sump. Sump shall be capable of withstanding

underground burial loads to be encountered. The sides of a containment sump shall allow the penetration of carrier pipes, exterior containment pipes, conduits, and vapor pipes as required. Penetrations in the containment sump sides shall be booted or sealed to ensure that liquid will not escape from the sump in the event that the liquid level within the sump rises above the pipe penetration. Boots and seals used shall be compatible with the fuel to be handled. Boots and seals shall be water resistant to the influx of ground water. Boots and seals shall be designed and installed to accommodate the anticipated amount of thermal expansion and contraction in the piping system.

2.9.3 Electrically Isolating Flanges

Flanges shall be provided with an electrical insulating material of 1000 ohms minimum resistance conforming to ASTM D 229. The material shall be resistant to the effects of the type of fuel to be handled. Gaskets shall be full face and be provided between flanges. Flanges shall have full surface 0.75 mm thick, spiral-wound mylar insulating sleeves between the bolts and the holes in the flanges. Bolts may have reduced shanks of a diameter not less than the diameter at the root of the threads. High-strength 3 mm thick phenolic insulating washers shall be provided next to the flanges with flat circular stainless steel washers over the insulating washers. Bolts shall be long enough to compensate for the insulating gaskets and stainless steel washers.

2.9.4 Electrically Isolating Union

Union shall be provided with an electrical insulating material of 1000 ohms minimum resistance conforming to ASTM D 229. The material shall be resistant to the effects of the type of fuel to be handled.

2.9.5 Concrete Anchor Bolts

Concrete anchor bolts shall be group II, Type A, class 2 in accordance with ASTM A 307.

2.9.6 Bolts

Bolts shall be in accordance with ASTM A 193/A 193M, Grade B8.

2.9.7 Nuts

Nuts shall be in accordance with ASTM A 194/A 194M, Grade 8.

2.9.8 Washers

Washers shall be in accordance with ASTM F 436M, flat circular stainless steel. Washers shall be provided under each bolt head and nut.

2.9.9 Exterior Coating of Miscellaneous Items

Steel surfaces to be externally coated or painted shall be cleaned to a commercial grade blast cleaning finish in accordance with SSPC SP 6 prior to the application of the coating. Exterior surfaces, other than stainless steel pipe and flexible connectors, which are not otherwise painted and do not require the application of an exterior coating, as well as all items supplied without factory-applied finish paint, not including primer only items, shall be painted as specified in Section 09900 PAINTS AND COATINGS.

2.9.10 Buried Utility Tape

Detectable aluminum foil plastic-backed tape or detectable magnetic plastic tape shall be provided for warning and identification of buried piping. Tape shall be detectable by an electronic detection instrument. Tape shall be provided in minimum 75 mm width rolls, color coded for the utility involved, with warning identification imprinted in bold black letters continuously and repeatedly over entire tape length. Permanent code and letter coloring shall be used which is unaffected by moisture and other substances contained in trench backfill material.

2.10 BULK FUELING

2.10.1 Filter-Separator Unit

Unit shall be tested and qualified in accordance with the performance requirements of API Spec 1581, Group II, Class B except as modified herein.

2.10.1.1 Housing Vessel

Unit shall be fabricated from carbon steel or aluminium and be internally coated. Unit shall be constructed and labeled in accordance with ASME BPVC SEC VIII D1. The housing shall be designed for a working pressure of 1030 kPa. Unit shall be horizontal, end-opening type with coalescers and separators mounted side-by-side (coalescers at the bottom of the vessel and separators at the top). The head opening shall be equipped with a hinged or pivoting device to facilitate swinging the head to one side for servicing. The hinges or pivots shall support the head during servicing without distortion or misalignment. Swing-type bolts shall be used on main closures. Unit shall be provided with 75 mm inside diameter lifting eyes spaced to support the entire weight of the unit. The housing shall be provided with a 19 mm inlet compartment fuel drain plug. A hand hole access plate shall be provided in the inlet compartment. Gaskets and O-ring shall be Buna-N or Viton construction. Threaded base mounting adapters shall be provided for the coalescers. The separators shall be mounted on adapters with blunted "Vee" type knife edges.

2.10.1.2 Legs

Unit shall be provided with 4 each 75 x 75 x 6 mm angle-shaped legs welded to the housing. Each leg shall be fitted with a 100 x 100 x 13 mm base plate.

2.10.1.3 Inlet and Outlet Connections

The inlet and outlet connections shall be as indicated and be located parallel to each other as indicated. Both inlet and outlet shall be flanged end connections.

2.10.1.4 Manual Drain Valve

Unit shall be equipped with a 19 mm stainless steel manual ball valve on a water and fuel drain line. The valve shall allow the drainage of water, fuel, and sediment from the unit by gravity.

2.10.1.5 Sight Gauge

Unit shall be provided with a 13 mm clear liquid level gauge for observing the water accumulation in the sump. The gauge shall be equipped with

nickel-copper alloy ball checks in both the upper and lower fittings, an upper and lower shutoff valve, and a bottom blowoff cock. The gauge shall contain a colored density sensitive ball.

2.10.1.6 Automatic Air Eliminator and Pressure Relief Valve

Unit shall be provided with an angle pattern pressure relief valve on top of the unit to assure the design working pressure of the unit is never exceeded. An automatic air eliminator shall be installed on top of the unit to vent trapped air from within the vessel. The air eliminator shall release at pressures up to 1030 kPa with no fuel leakage. The air eliminator shall be provided with a nonreturn check valve feature, opening pressure of 7 kPa, to prevent air from being drawn into the unit via the air eliminator.

2.10.1.7 Sampling Connections

Sampling connections shall be provided at the inlet and outlet connections to the housing. Each sampling connection shall consist of a 6 mm sampling probe where the probe faces upstream; a ball valve; a quick disconnect coupling; and an aluminum dust cap. The sampling connections shall be capable of accepting a sampling kit for drawing the samples required to assure fuel quality.

2.10.1.8 Spider Assembly

Unit shall be provided with a spider assembly to hold the coalescers and separators in position and to support against vibration. The method of stabilization shall assure an electrical bond between the spider and the vessel.

2.10.1.9 Coalescer and Separator Cartridges

Unit shall be provided with coalescers and separators that have been qualified to the performance requirements of API Spec 1581, Group II, Class B. Separators shall be 200 mesh stainless steel and be coated on both sides with teflon. Coalescers shall have a minimum capacity of 5.7 mL/s per mm of length, and separators shall have a minimum capacity of 21.0 mL/s per mm of length.

2.10.1.10 Differential Pressure Gauge

The unit housing shall be equipped with a direct-reading, piston type differential pressure gauge that measures the differential pressure across both coalescers and separators. The gauge shall consist of a spring-supported, corrosion resistant piston moving inside a glass cylinder. The cylinder shall have stainless steel end flanges with Viton O-ring seals. The high pressure inlet of the gauge shall have a 0.01 mm pleated paper filter and the low pressure connection shall have a fine mesh stainless steel strainer. The gauge shall have an operating pressure of 2070 kPa with a cylinder burst pressure of not less than 8270 kPa. Differential pressure range of the gauge through approximately 75 mm of piston movement shall be 0-210 kPa with an accuracy of plus or minus 3.5 kPa, calibrated linearly with 7 kPa scale graduations. High and low pressure connections shall be 6 mm NPT female with a stainless steel bar stock valve at each connection. Construction of the gauge shall be such that a 3-valve manifold is not necessary. If only 1 bar stock valve is closed, the gauge shall not be damaged by up to 2070 kPa differential pressure in either direction. The differential pressure gauge shall be attached to the filter

separator by a gauge panel.

2.10.1.11 Filter-Separator Factory Tests

Factory tests shall be performed on a filter separator to demonstrate compliance with the testing and qualification procedures defined in API Spec 1581 for Group II, Class B filter separators. The tests shall be performed in the presence of a Government representative if deemed necessary by the Contracting Officer. The tests shall be on a full-scale test system in accordance API Spec 1581, except as modified herein. The test sample shall consist of a complete filter separator with coalescer and separator elements installed. Elements shall be representative of a production lot. The filter separator, coalescers, and separator screens shall be identified with the manufacturer's part number. Prior to performing Test Series 1, 2, and 3, the filter separator shall be subjected to a hydrostatic pressure of 1900 kPa per the requirements of ASME BPVC SEC VIII D1. The average free water content in a test set shall not exceed 10 parts per million and any single sample shall not exceed 15 parts per million.

2.10.2 System Control Valves

Valves shall be single-seated, diaphragm actuated, pilot-controlled globe valves. Each shutoff valve shall be provided with a position indicator, a pilot circuit strainer, and pressure gauge quick-disconnect fittings located in the valve inlet, outlet, and cover. Service and adjustments to a valve shall be possible without removing the valve from the line. Portions of a valve coming in contact with fuel shall be compatible with the fuel and be of noncorrosive material. Valves shall have bodies, bonnets, and covers constructed of stainless steel conforming to ASTM A 743/A 743M, type 304 or type 316; or aluminum alloy conforming to ASTM B 26/B 26M, types 3003, 6061-T6, or 356-T6. Each valve shall have stainless steel stem and trim. Valves shall be suitable for a working pressure of 1900 kPa at 38 degrees C with a weatherproof housing. Valves shall be provided with flanged end connections unless otherwise indicated. Seats, body seals, and stem seals shall be Viton or Buna-N.

2.10.2.1 Pressure Control Valve

Valve shall be capable of maintaining the downstream flow rate at the indicated pressure. Valve setpoint shall be adjustable within a minimum range of plus or minus 20 percent of the indicated setpoint. Functions shall be externally adjustable. Valve shall be provided with a stainless steel orifice plate integrally mounted at the inlet port of the valve. Stainless steel control piping shall be provided to allow sensing differential pressure across the orifice plate. Valve shall be provided with opening speed controllers which are adjustable from 2 to 30 seconds without affecting the closing of the valve. Speed controllers shall be field adjustable and factory set for 15 seconds.

2.10.2.2 Float-Operated Control Valve

Valve shall be float-operated and normally closed. The valve shall be the on/off type that is fully open at the low set point and fully closed at the high set point. The float and float assembly shall be stainless steel and be compatible with the fuel to be handled. The high/low movement span of the float shall be field adjustable.

2.10.2.3 Relief Valve

Valve shall be hydraulically operated and normally closed. Valve shall be capable of maintaining a constant upstream pressure regardless of the downstream demand. Valve shall have an angle or straight pattern as indicated. Valves shall be factory-set to open at the indicated pressure and be field adjustable. Valve setpoint shall be adjustable within a minimum range of plus or minus 20 percent of the indicated setpoint. Each valve shall be provided with a cast steel sight flow indicator which has flanged end connections. The sight flow indicator shall consist of a housing containing a rotating propeller that is visible through a glass observation port.

2.10.2.4 Filter Separator Control Valve and Float Assembly

Valve shall be float-operated and normally opened. Valve shall be capable of maintaining the downstream flow rate at the indicated pressure. Functions shall be externally adjustable. Valve shall be provided with a stainless steel orifice plate integrally mounted at the inlet port of the valve. Stainless steel control piping shall be provided to allow sensing differential pressure across the orifice plate. Valve shall be provided with a float-operated pilot control assembly. The float and float assembly shall be stainless steel. The movement span of the float shall be field adjustable. The assembly shall be fitted into the filter separator housing sump. The float assembly shall control both the filter separator control valve and the automatic water drain valve. Float shall ride on the fuel-water interface inside the filter separator sump and have 3 stages of operation. The stages of operation include:

(a) Stage I: With the float down, the filter separator control valve shall be open and the automatic water drain valve closed.

(b) Stage II: With the float at the intermediate level, the filter separator control valve shall remain open while the automatic water drain valve opens.

(c) Stage III: With the float at a high level, the filter separator control valve shall close while the automatic water drain valve remains open.

2.10.3 Control Stations

Each tank truck and tank car unloading station shall be provided with a pump control start/stop station, an emergency "stop" pushbutton station, and a grounding unit. Each truck fill stand shall be provided with a pump control start/stop station, an emergency "stop" pushbutton station, a grounding unit, deadman control, and a truck overfill unit. Electrical supply and electrical control equipment shall be suitable for Class I, Division 1, Group D locations, be intrinsically safe, be weather resistant and be in accordance with UL 913, NEMA 250, and NFPA 70. Mounting hardware shall be corrosion resistant.

2.10.3.1 Pump Control Start/Stop Station

Station shall include a start pushbutton, a stop pushbutton, and red and green indicating lights. The sequence of operation for the station shall be as indicated on the drawings. During activation, the start pushbutton shall maintain contact until deactivated by the stop pushbutton. The stop pushbutton shall maintain contact until deactivated by the start pushbutton.

2.10.3.2 Emergency "Stop" Pushbutton Station

Activation of the emergency pushbutton station shall shutdown power to the entire fueling system and send an alarm signal to the fire department as indicated. Station housing shall contain an emergency pushbutton. Pushbutton shall be a single unit with a bright red jumbo mushroom operator with 1-NC and 1-NO contact. During activation, the pushbutton shall maintain contact until deactivated by a key release. A caution sign shall be mounted beside the emergency shutdown station, with red 50 mm letters stating "EMERGENCY SHUTDOWN". The sign shall have a white background and be of noncorrosive construction.

2.11 MONITORING SYSTEM

2.11.1 Belowground Piping System

Belowground piping systems shall be continuously and automatically monitored by electronic capacitance type liquid sensors as indicated. Sensors shall be capable of distinguishing the difference between hydrocarbons and water. Sensors shall be intrinsically safe for use in a class 1, division 1, group D environment as defined by NFPA 70. Sensors shall have a probability of detection of 95 percent and a probability of false alarm of 5 percent. Sensors shall be compatible with the electronic monitoring panel.

2.11.2 Electronic Monitoring Panel

panel shall be tank-mounted and shall be capable of providing an audible and visual alarm in the event of a detected leak. Audible alarms shall be a buzzer sounding at 70 decibels or greater. Each visual alarm shall indicate the type and location of the alarm condition. Visual alarms shall be capable of delineating between individual alarm conditions. Panel shall provide a means of delineating between individual alarm conditions. Panel shall be housed in a NEMA 4 rated enclosure in accordance with NEMA 250. Panel shall have a hinged door to swing left or right (doors shall not swing up or down). Panel using computer memory shall be capable of maintaining current programmable information in the event of a power failure. Panel shall be provided with a manual acknowledge switch which shall be capable of deactivating the audible alarm. The acknowledge switch shall not be capable of deactivating subsequent audible alarms unless depressed manually again for each occurrence. Under no circumstance shall this acknowledgement switch extinguish the visual alarms until the alarm condition has been corrected. Switches shall be an integral component located on the front panel and be either a key switch or push button.

2.12 PIPING COMPONENTS

2.12.1 Product Piping

Piping routinely carrying fuel shall be steel as defined herein.

2.12.2 Secondary Containment Piping

Belowground piping carrying fuel shall be secondarily contained, unless otherwise indicated. Piping system shall be of double-wall construction with the internal pipe being the product pipe and the exterior pipe being an fiberglass reinforced plastic containment pipe as defined herein. Piping system shall be a factory manufactured piping system designed in

accordance with ASME B31.3 and NFPA 30. The containment piping shall allow for complete inspection of the product piping before the containment piping is sealed. Containment piping shall be chemically compatible with the type of fuel to be handled. Containment piping shall be non-corrosive, dielectric, non-biodegradable, and resistant to attack from microbial growth. Containment piping shall be capable of withstanding a minimum 35 kPa air pressure. Containment piping shall be evenly separated from the primary pipe using pipe supports which are designed based on pipe size, pipe and fuel weight, and operating conditions. The supports shall be constructed of the same material as the primary pipe and shall be designed so that no point loading occurs on the primary or exterior pipe. Supports shall be permanently attached to the product pipe either by tack welding or by an adhesive. The exterior piping and supports shall allow for normal draining as well as the installation of any necessary leak detection equipment or cables. Supports shall be designed and installed to allow for pipe movement of both the product piping and the exterior piping without causing damage to either. Containment piping shall be capable of withstanding H-20 highway loading as defined by AASHTO HB-17.

2.12.3 Vent and Vapor Recovery Piping

Piping shall be single wall steel as defined herein.

2.12.4 Steel Pipe

Carbon steel pipe shall be in accordance with ASTM A 53/A 53M, Type E or S, Grade B, or API Spec 5L, seamless or electric-weld, Grade B. Pipe smaller than 65 mm shall be Schedule 80. ASTM A 53/A 53M pipe 65 mm and larger shall be Schedule 40. API Spec 5L pipe 65 mm and larger shall be Schedule 40S.

2.12.4.1 Connections for Steel Pipe

Connections for pipe or fittings smaller than 65 mm shall be forged, socket weld type, 2000 W.O.G. conforming to ASTM A 182/A 182M and ASME B16.11. Connections for pipe or fittings 65 mm and larger shall be butt weld type conforming to ASTM A 234/A 234M, Grade WPB and ASME B16.9 of the same wall thickness as the adjoining pipe. Piping in inaccessible locations, such as product piping inside of containment piping, shall be welded.

2.12.4.2 Welding Electrodes

Welding electrodes shall be E70XX low hydrogen type conforming to AWS A5.1/A5.1M or AWS A5.4/A5.4M.

2.12.5 Fiberglass Reinforced Plastic (FRP) Pipe

2.12.5.1 Pipe

Pipe shall be compatible with the fuel to be handled and be in accordance with ASTM D 5677. Pipe shall be compatible with the fluid being transported. Use of FPR piping is limited to buried service only and at pressures not exceeding that marked on the pipe.

2.12.5.2 Fittings

Fittings and joining materials shall be in accordance with ASTM D 5677. Threaded fittings shall not be used for product piping in inaccessible locations. Fittings for secondary exterior pipe of double-wall piping

system shall accommodate the primary inner pipe and any additional equipment required, such as leak detection cables. Fittings and joining materials shall be compatible with the fuel to be handled.

2.12.6 Valves

Portions of a valve coming in contact with fuel shall be compatible with the fuel to be handled. Valves shall have bodies, bonnets, and covers constructed of cast steel conforming to ASTM A 216/A 216M, Grade WCB. Each valve shall have stainless steel stem and trim. Valves shall be suitable for a working pressure of 1900 kPa at 38 degrees C with a weatherproof housing and be provided with flanged end connections unless indicated otherwise. Seats, body seals, and stem seals shall be Viton or Buna-N.

2.12.6.1 Gate

Valve shall be in accordance with API Spec 6D and conform to the fire test requirements of API Spec 6FA Valve shall be of the flexible wedge disc type, conduit disc type, or double disc type. Valve shall be of the rising stem type with closed yoke, or the non-rising stem type equipped with a device to give positive visual indication of the valve's position.

2.12.6.2 Swing Type Check

Valve shall be swing type conforming to API Spec 6D regular type. Check valves shall be the tilting disc, non-slam type. Discs and seating rings shall be renewable without removing from the line. The disc shall be guided and controlled to contact the entire seating surface.

2.12.6.3 Wafer Type Check

Valves shall conform to API Spec 6D and API Std 594. Wafer type check valves may be provided in lieu of swing check valves in piping sizes larger than 100 mm.

2.12.6.4 Ball

Valves 50 mm and larger shall conform to API Spec 6D. Valves smaller than 50 mm shall have one piece bodies and have a minimum bore not less than 55 percent of the internal cross sectional area of a pipe of the same nominal diameter. The ball shall be stainless steel. Valve shall be fire tested and qualified in accordance with API Spec 6FA or API Std 607. Valve shall be non-lubricated and operate from fully open to fully closed with 90 degree rotation of the ball.

2.12.6.5 Plug

Valve shall be in accordance with API Spec 6D. Valve shall be non-lubricated, resilient, double seated, trunnion mounted type with a tapered lift plug capable of 2-way shutoff. Valve shall operate from fully open to fully closed by rotation of the handwheel to lift and turn the plug. Valve shall have weatherproof operators with mechanical position indicators.

2.12.6.6 Globe

Valve shall conform to ASME B16.34.

2.12.6.7 Pressure\Vacuum Vent Relief

Valve pressure and vacuum capacities shall be in accordance with NFPA 30. Valve shall be factory set for 5.2 kPa pressure and 215 Pa vacuum. Pressure and vacuum relief shall be provided by a single valve. Valve shall be constructed of cast steel or aluminum with flanged or threaded end connections. Trim shall be stainless steel. Inner valve pallet assemblies shall have a knife-edged drip ring around the periphery of the pallet to preclude condensation collection at the seats. Pallet seat inserts shall be of a material compatible with the fuel specified to be stored.

2.12.7 Accessories

2.12.7.1 Foot Valve

Foot valve shall be compatible with the fuel to be handled and with the working pressure of the system. Foot valve shall be the double-poppet design. Foot valve shall be provided with a minimum 20 mesh screen on the intake. Foot valve seats shall be the replaceable type. Foot valve shall be capable of passing through a 75 mm pipe or tank flange.

2.12.7.2 Flanges

Flanges installed on equipment, fittings, or pipe shall be Class 150 pound flanges which are rated in accordance with ASME B16.5. Flanges shall be the 1.6 mm raised face type, except for connections to FRP pipe. Connections to FRP pipe shall be made with flat face flanges. Stainless steel flanges shall conform to ASTM A 182/A 182M. Aluminum flanges shall conform to ASTM A 182/A 182M, alloy 6061-T6 or alloy 356-T6. Carbon steel flanges shall conform to ASTM A 181/A 181M, Grade 2.

2.12.7.3 Flange Gaskets

Flange gaskets shall be 2 mm thick, NBR, and be in accordance with ASME B16.21. Full-face gaskets shall be provided for flat-face flanged pipe joints. Ring gaskets shall be provided for raised-face flanged pipe joints.

2.12.7.4 Steel Coupling

Coupling shall be in accordance with API Spec 5L, seamless, extra heavy, wrought steel with recessed ends.

2.12.7.5 Welded Nipple

Nipple shall be in accordance with ASTM A 733 or ASTM B 687 and of the same material as the product piping.

2.12.7.6 Threaded Union

Threaded unions shall only be used on cast steel piping 50 mm in nominal size or smaller and only where indicated. Union shall be in accordance with ASME B16.39, Class 150.

2.12.7.7 Joint Compound

Joint compounds for any type of piping system shall be resistant to water and suitable for use with fuel containing 40 percent aromatics.

2.12.7.8 Flexible Connector

Connectors shall conform to requirements of UL 567 and be the flexible metal hose, corrugated type with braided wire sheath covering. Connectors shall have close-pitch annular corrugations and be rated for a working pressure of at least 1900 kPa at 38 degrees C. Connectors shall have a minimum 300 mm live length with flanged end connections. Metal for hose and braided wire sheath shall be stainless steel in accordance with ASTM A 167.

2.12.7.9 Strainer

Strainer shall be in accordance with ASTM F 1199 or ASTM F 1200, except as modified herein. Strainer shall be the cleanable, basket or "Y" type, and be the same size as the pipeline. Strainer body shall be fabricated of cast steel or brass with the bottom drilled and tapped. The body shall have arrows clearly cast on the sides indicating the direction of flow. Strainer shall be equipped with a removable cover and sediment screen. Strainer screen shall be wire screen constructed of brass sheet, Type 316 stainless steel, with small perforations numbering not less than 60 per square centimeter to provide a net free area through the basket of at least 3.3 times that of the entering pipe. Flow shall be into the screen and out through the perforations.

2.12.7.10 Pipe Hangers and Supports

Hangers and supports shall be of the adjustable type and conform to MSS SP-58 and MSS SP-69, except as modified herein. The finish of rods, nuts, bolts, washers, hangers, and supports shall be hot-dipped galvanized. Nuts, bolts, washers, and screws shall be Type 316 stainless steel when located under any pier. Miscellaneous metal shall be in accordance with ASTM A 36/A 36M, standard mill finished structural steel shapes, hot-dipped galvanized.

a. Pipe Protection Shields. Shields shall conform to MSS SP-58 and MSS SP-69, Type 40, except material shall be Type 316 stainless steel. Shields shall be provided at each slide type pipe hanger and support.

b. Low Friction Supports. Supports shall have self-lubricating anti-friction bearing elements composed of 100 percent virgin tetrafluoroethylene polymer and reinforcing aggregates, prebonded to appropriate backing steel members. The coefficient of static friction between bearing elements shall be 0.06 from initial installation for both vertical and horizontal loads and deformation shall not exceed 0.05 mm under allowable static loads. Bonds between material and steel shall be heat cured, high temperature epoxy. Design pipe hangers and support elements for the loads applied. Anti-friction material shall be a minimum of 2.3 mm thick. Steel supports shall be hot-dipped galvanized. Units shall be factory designed and manufactured.

2.12.7.11 Exterior Coatings for Belowground Steel Piping

Piping placed in direct contact with backfill or soil shall be provided with an exterior protective coating.

a. Pipe: Pipe shall receive protective coating system of factory-applied adhesive undercoat and continually extruded

polyethylene coating conforming to NACE RP0185, Type A. The protective coating shall have a minimum thickness of 0.76 mm (30 mils) .

b. Fittings and Other Surfaces: Fittings, couplings, regular surfaces, damaged areas of extruded polyethylene coating and existing piping affected by the Contractor's operations shall be protected by the application of polyethylene tape which conforms to NACE RP0169, 0.76 mm nominal thickness. Surfaces to be tape wrapped shall be clean, dry, grease free, and primed with a compatible primer prior to application of tape. Primer shall be as recommended by the tape manufacturer and approved by the pipe coating manufacturer. Heat shrink sleeves may be provided in lieu of tape and shall overlap the pipe coating not less than 150 mm.

c. Irregular Surfaces: Irregular surfaces shall be protected with a cold-applied liquid primer and heated coal-tar tape in accordance with AWWA C203.

2.12.7.12 Exterior Coating for Aboveground Steel Piping

Aboveground steel piping shall be painted as specified in Section 09900 PAINTS AND COATINGS. Paint shall be rated for use on hot metal surfaces up to 230 degrees C and for surfaces exposed to the weather. Color of the finish coat shall be selected by the Contracting Officer.

2.12.7.13 Pressure Gauge

Gauge shall conform to ASME B40.100. Gauge shall be single style pressure gauge for fuel with 115 mm dial, have brass or aluminum case, bronze tube, stainless steel ball valve, pressure snubbers, and scale range for the intended service.

PART 3 EXECUTION

3.1 INSTALLATION

Storage tanks shall be handled with extreme care to prevent damage during placement and shall be installed in accordance with the manufacturer's installation instructions and NFPA 30 or NFPA 30A, as applicable. The exterior surface of each tank shall be inspected for obvious visual damage prior to and proceeding the placement of each storage tank. Surface damage to a storage tank shall be corrected according manufacturer's requirements before proceeding with the system installation.

3.1.1 Steel Tank Handling

Storing, handling, and placing of coated steel tanks shall be done with care and in a manner that will minimize damage to the coating and will not reduce its protective value. A coated tank shall be placed in position carefully and with a minimum of handling. Coating damage shall be repaired and tested as previously specified before backfilling.

3.1.2 Steel Tank Installation Procedures

Tank shall be anchored to a reinforced concrete anchor pad as indicated through the use of manufacturer's supplied holddown straps. Tank shall be separated from an anchor pad by a minimum of 300 mm of backfill material. Metal straps, turnbuckles, anchors, and accessories shall be coated to

resist corrosion. Holiday testing of protective coatings for steel tanks shall be successfully completed prior to any backfilling, strapping, or piping connections to the tank. Backfill material shall be uniformly placed around the entire tank and extend to grade level. Tank anodes shall be inspected to ensure integrity during backfill operations.

3.1.3 Equipment

Equipment shall be properly leveled, aligned, and secured in place in accordance with manufacturer's instructions. Supports shall be provided for equipment, appurtenances, and pipe as required. Floor-mounted pumps shall be provided with mechanical vibration isolators or a vibration isolation foundation. Anchors, bolts, nuts, washers, and screws shall be installed where required for securing the work in place. Sizes, types, and spacings of anchors and bolts not indicated or specified shall be as required for proper installation. Each dispenser and dispenser sump shall be installed in accordance with manufacturers' instructions. Dispensing units shall be isolated from the piping during flushing and cleaning operations.

3.1.4 Piping

Piping shall be inspected, tested, and approved before burying, covering, or concealing. Piping shall be installed straight and true to bear evenly on supports. Piping shall be free of traps, shall not be embedded in concrete pavement, and shall drain toward the corresponding storage tank. Any pipe, fittings, or appurtenances found defective after installation shall be replaced. Piping connections to equipment shall be as indicated or as required by the equipment manufacturer. Pipe and accessories shall be handled carefully to assure a sound, undamaged condition. The interior of the pipe shall be thoroughly cleaned of foreign matter and shall be kept clean during installation. The pipe shall not be laid in water or stored outside unprotected when weather conditions are unsuitable. When work is not in progress, open ends of pipe and fittings shall be securely closed so that water, earth, or other substances cannot enter the pipe or fittings. Cutting pipe, when necessary, shall be done without damage to the pipe. Pipe shall be reamed to true internal diameter after cutting to remove burrs. Changes in pipe sizes shall be made through tapered reducing pipe fittings. Stainless steel pipe shall in no case be welded directly to carbon steel pipe. Cutting of FRP pipe shall be performed with a hacksaw or circular saw. Fuel supply piping from a storage tank shall extend to within 150 mm of the tank's bottom.

3.1.4.1 Aboveground Piping

Pipe sections shall be installed as indicated and be complete prior to performing any piping tests. FRP shall not be used aboveground.

3.1.4.2 Belowground Piping

Nonmetallic pipe shall be installed in accordance with pipe manufacturer's instructions. Belowground piping shall be laid with a minimum pitch of 25 mm per 6 m. Horizontal sections of pipe shall be installed with a minimum of 450 mm of backfill between the top of the pipe and the ground surface. The full length of each section of belowground pipe shall rest solidly on the pipe bed. Joints in secondary piping shall not be made until inner pipe is successfully pressure tested.

3.1.4.3 Pipe Hangers and Supports

Additional hangers and supports shall be installed for concentrated loads in piping between hangers and supports, such as for valves. Miscellaneous steel shapes as required shall be installed in accordance with ASTM A 36/A 36M. Pipe supports shall be installed in accordance with MSS SP-58and MSS SP-69. Pipe spacing shall be as follows:

Nominal Pipe Size (mm)	25 and Under	40	50	80	100	150	200	250	300
Maximum Hanger Spacing (m)	2.1	2.7	3	3.7	4.3	5.2	5.8	6.7	7.0

3.1.4.4 Pipe Sleeve

Piping passing through concrete or masonry construction shall be fitted with sleeves. Sleeve shall be of sufficient length to pass through the entire thickness of the associated structural member and be large enough to provide a minimum clear distance of 13 mm between the pipe and sleeve. Sleeves through concrete shall be 0.91 mm steel, fiberglass, or other material as approved by the Contracting Officer. Sleeves shall be accurately located on center with the piping and securely fastened in place. The space between a sleeve and a pipe shall be caulked and sealed as specified in Section 07900 JOINT SEALANTS. In fire walls and fire floors, both ends of a pipe sleeve shall be caulked with UL listed fill, void, or cavity material.

3.1.4.5 Pipe Anchor

Where steel piping is to be anchored, the pipe shall be welded to the structural steel member of the anchor and the abraded area shall be patched with protective coating or covering as specified.

3.1.4.6 Exterior Coating for Belowground Steel Pipe

Except as otherwise specified, protective coatings shall be applied mechanically in a factory or field plant especially equipped for the purpose. Valves and fittings that cannot be coated and wrapped mechanically shall have the protective covering applied by hand, preferably at the plant that applies the covering to the pipe. Joints shall be coated and wrapped by hand. Hand coating and wrapping shall be done in a manner and with materials that will produce a covering equal in thickness to that of the covering applied mechanically. Piping installed in valve boxes or manholes shall also receive the specified protective coating.

a. Regular Surfaces, Fittings, and Couplings: Tape shall be initially stretched sufficiently to conform to the surface to which it is applied, using one layer lapped at least 25 mm. Tape shall overlap the extruded polyethylene coated piping 75 mm at all joints. A second layer, lapped at least 25 mm with a tension as it comes off the roll shall be applied and pressed to conform to the shape of the component.

b. Damaged Areas of Extruded Polyethylene Coating: Residual material from coating shall be pressed into the break or trimmed off. Tape shall be applied spirally and one-half lapped as it is applied. Tape shall extend 75 mm beyond the damaged area. A double wrap of one full width of tape shall be applied at right angles to the

pipe axis in a manner to seal each end of the spiral wrapping.

c. Existing Piping Affected by the Contractor's Operation: Pipe shall be wrapped to 75 mm beyond the point of connection.

3.1.5 Buried Utility Tape

Bury tape with the printed side up at a depth of 300 mm below the top surface of earth or the top surface of the subgrade under pavements.

3.1.6 Field Painting

Painting required for surfaces not otherwise specified, and finish painting of items only primed at the factory, shall be painted and have identification markings applied as specified in Section 09900 PAINTS AND COATINGS. Stainless steel and aluminum surfaces shall not be painted. Prior to any painting, surfaces shall be cleaned to remove dust, dirt, rust, oil, and grease.

3.1.7 Framed Instructions

Framed instructions shall include equipment layout, wiring and control diagrams, piping, valves, control sequences, and typed condensed operation instructions. The condensed operation instructions shall include preventative maintenance procedures, methods of checking the system for normal and safe operation, and procedures for safely starting and stopping the system. The framed instructions shall be framed under glass or laminated plastic and be posted where directed by the Contracting Officer. The framed instructions shall be posted before acceptance testing of the system.

3.2 TESTS

3.2.1 Aboveground Storage Tank Tightness Tests

A tightness test shall be performed on each aboveground storage tank. The tests shall be performed prior to making piping connections. Tests shall be capable of detecting a 0.1 mL/s leak rate from any portion of the tank while accounting for effects of thermal expansion or contraction. Gauges used in the tightness tests shall have a scale with a maximum limit of 69 kPa. Each storage tank shall be pressurized with air to 35 kPa and monitored for a drop in pressure over a 2-hour period during which there shall be no drop in pressure in the tank greater than that allowed for pressure variations due to thermal effects. This pressure shall be maintained and soapsuds or equivalent material applied to the exterior of the tank. While applying the soapsuds, the entire tank shall be visually inspected, including the bottom surfaces, for leaks (bubble formations). Leaks discovered during either the 2-hour waiting period or the soapsuds tests shall be repaired in accordance with manufacturer's instructions. The pneumatic test shall be performed again in the event a leak is discovered.

3.2.2 Pneumatic Test

Pneumatically pressurize each storage tank's primary chamber to 35 kPa and monitor for a drop in pressure over a 2-hour period during which there shall be no drop in pressure in the tank greater than that allowed for thermal expansion and contraction. Following the 2-hour period, the pressure from the primary chamber shall then be bled over into the

interstitial space. This pressure shall be maintained and soapsuds or equivalent material applied to the exterior of the tank. While applying the soapsuds, the entire tank shall be visually inspected, including the bottom surfaces, for leaks (bubble formations). Leaks discovered in either the primary chamber or the interstitial space shall be repaired in accordance with manufacturer's instructions. The entire pneumatic test shall be performed again in the event a leak is discovered. Gauges used in pneumatic tests shall have a scale with a maximum limit of 69 kPa.

3.2.3 Manufacturer's Tank Tests

Following the tank tightness test, each storage tank shall be leak tested in accordance with the manufacturer's written test procedure if the manufacturer's test procedure is different from the tightness tests already performed. Any test failure shall require corrective action and retest.

3.2.4 Piping Pneumatic and Hydrostatic Tests

Testing shall comply with the applicable requirements of ASME B31.3, NFPA 30, and the requirements specified herein. Care shall be taken not to exceed pressure rating of various fittings. Hydrostatic testing shall be performed using fuel as the liquid. Water shall not be introduced into the system for testing. To facilitate the pneumatic and hydrostatic tests, various sections of the piping system may be isolated and tested separately. Where such sections terminate at flanged valve points, the line shall be closed by means of blind flanges in lieu of relying on the valve. Tapped flanges shall be provided to allow a direct connection between the piping and the air compressor and/or pressurizing pump. Tapped flanges shall also be used for gauge connections. Taps in the permanent line will not be permitted. Gauges shall be subject to testing and approval. In the event leaks are detected, the pipe shall be repaired and the test repeated. Following satisfactory completion of each pneumatic and hydrostatic test, the pressure shall be relieved and the pipe immediately sealed. Provision shall be made to prevent displacement of the piping during testing. Personnel shall be kept clear of the piping during pneumatic testing. Equipment such as pumps, tanks, and meters shall be isolated from the piping system during the testing.

3.2.4.1 Pneumatic Procedures for Product and Vent\Vapor Piping

Piping to be installed underground shall not receive field applied covering at the joints or be covered by backfill until the piping has passed the pneumatic test described herein. A pneumatic test pressure shall be applied in increments. A preliminary 170 kPa test shall be applied. The pressure shall be maintained while soapsuds or equivalent materials are applied to the exterior of the piping. While applying the soapsuds, the entire run of piping, including the bottom surfaces, shall be visually inspected for leaks (bubble formations). Leaks discovered shall be repaired in accordance with manufacturer's instructions and retested. Following the preliminary test, the piping shall be tested at a pressure of 340 kPa for not less than 2 hours, during which time there shall be no drop in pressure in the pipe greater than that allowed for thermal expansion and contraction. The pressure source shall be disconnected during the final test period. Any leaks revealed by the test shall be repaired and the test repeated.

3.2.4.2 Pneumatic Procedures for Exterior Containment Piping

Exterior containment piping shall undergo a minimum pneumatic pressure of

35 kPa. Pressure in secondary piping shall be maintained for at least 1 hour while soapsuds or equivalent materials are applied to the exterior of the piping. While applying the soapsuds, the entire run of piping, including the bottom surfaces, shall be visually inspected for leaks (bubble formations). Leaks discovered shall be repaired in accordance with manufacturer's instructions and retested. This testing shall be in compliance with the manufacturer's published installation instructions.

3.2.4.3 Hydrostatic Procedures for Product Piping

Upon completion of pneumatic testing and after backfilling, each piping system shall be hydrostatically tested with fuel at not more than 1900 kPa in accordance with ASME B31.3 and API RP 1110, with no leakage or reduction in gauge pressure for 4 hours. The Contractor shall furnish electricity, instruments, connecting devices, and personnel for the test. Fuel will be furnished by the Government. Defects in work performed shall be corrected at the Contractor's expense, and the test repeated until the work is proven to be in compliance with the testing procedures. Any release of fuel (no matter the size) during testing shall be immediately contained, the pressure on the piping relieved, and the piping drained of fuel. The Contracting Officer shall be notified immediately of a fuel release, the exact location, an estimated quantity of release, and a discussion of the containment measures taken.

3.2.5 System Performance Tests

After all components of the system have been properly adjusted, the system shall be tested to demonstrate that the system meets the performance requirements for which it was designed. The maximum rated capacity of the system shall be tested by using several tank trucks simultaneously, if applicable. The use of tank trucks shall be coordinated with the Contracting Officer prior to testing. If any portion of the system or any piece of equipment fails to pass the tests, the Contractor shall make the necessary repairs or adjustments and the test shall be repeated until satisfactory performance is obtained from the Contracting Officer. The tests shall demonstrate the following:

a. The capability of each fuel pump to deliver the indicated flow of fuel.

b. The alarm and control panels are operational and perform as designed.

c. Each fuel meter is operating accurately.

d. Vent piping is clear of debris and each pressure/vacuum relief vent is operating properly.

e. Vapor recovery systems perform as designed.

f. Dispensing units are operational and perform as designed.

g. Truck loading and unloading arm assemblies perform as designed. Each preset type meter, counter and truck fill stand shutoff valve operates as designed.

h. The capability of each emergency stop pushbutton station to shutdown the entire fueling operation.

3.2.6 High Liquid Level Alarm Test

Each storage tank shall be initially overfilled with the appropriate product in order to verify the high liquid level alarms in the remote alarm panel function as designed. The initial overfill shall also verify that the storage tank overfill protection device functions as designed. Tank overfill shall stop immediately once the overfill device operates. The Contractor shall not overfill any storage more than 98 percent level even if the leak detection and liquid level electronic panel and the overfill device do not function as designed. Any problems with the electronic panel or the overfill device shall be corrected and retested. The system shall be drained below the high liquid levels following all tests.

3.3 FLUSHING, CLEANING AND ADJUSTING

Following installation and equipment testing but prior to system performance testing, the following flushing, cleaning, and adjustments shall be performed.

3.3.1 Preparations for Flushing

3.3.1.1 Initial System Cleaning

The interior of each fuel storage tank shall be visually inspected and cleaned free of debris before filling. In the event of entry into a storage tank, the Contractor shall ensure a safe atmosphere exists. Contractor shall remove all preservatives and foreign matter from valves, line strainers, pumps, and other equipment coming in contact with fuel. No fuel will be delivered to the system until the Contractor has satisfactorily completed this initial system cleaning.

3.3.1.2 Protection of Equipment

Temporary 40 mesh cone type strainers shall be installed in the suction line ahead of each fueling pump as well as ahead of each filter/separator. The strainers shall be constructed of the same material as the piping and shall be compatible with the fuel to be handled. The temporary strainers shall remain in place for a minimum of 2 days after system startup, after which time the Contractor shall remove the strainers and prepare the piping as intended for final system operation.

3.3.2 System Flushing

3.3.2.1 Initial Fuel Supply

Following the preparations for flushing, each storage tank shall be filled to a 25 percent capacity with the proper fuel according to the fueling system's final operational requirements. Following the initial fuel supply, each storage tank's fuel temperature and liquid level shall be measured and recorded. The liquid level shall be measured using a manual tank gauge.

3.3.2.2 Disposal of Initial Fuel Supply

In the event the fuel contained in the piping system at the conclusion of the flushing operation is not considered by the Contracting Officer to be of satisfactory quality for the desired use, the Contractor shall be responsible for pumping out the entire fuel supply from the storage tanks and the piping system. The filter/separator and piping system shall be

completely drained to the storage tank. Disposition of the fuel removed from the system shall be the responsibility of the Government.

3.3.3 Cleaning Equipment

Upon completion of flushing operations, permanent strainers shall be removed, cleaned, and reinstalled. If the pressure differential across the filter/separator elements exceeds that recommended by the manufacturer, the elements shall be replaced with the spare set furnished with the unit.

3.3.4 Initial System Adjustments

Following the flushing and cleaning operations, each system component shall be initially adjusted, if necessary, to meet the system's final operational requirements. The Government will deliver enough fuel to the storage tanks to enable the Contractor to make final adjustments to equipment and controls. Flow rates and pressures shall be adjusted as required to meet the indicated requirements. The sequence of control for each component shall be adjusted to meet the indicated system requirements. Following the initial system adjustments, the equipment tests shall be performed in order to determine any necessary final system adjustments.

3.4 DEMONSTRATIONS

Contractor shall conduct a training course for the operating staff as designated by the Contracting Officer. The training period shall consist of a total of 8 hours of normal working time and shall start after the system is functionally completed but prior to final system acceptance. The field instructions shall cover all of the items contained in the operation and maintenance manuals as well as demonstrations of routine maintenance operations.

-- End of Section --

SECTION 13214

WASTE PETROLEUM TANKS

PART 1 GENERAL

1.1 REFERENCES

Publications listed below form a part of this specification to the extent referenced. Publications are referred to in the text by basic designation only.

AMERICAN ASSOCIATION OF STATE HIGHWAY AND TRANSPORTATION OFFICIALS (AASHTO)

AASHTO HB-17	(2002) Standard Specifications for Highway Bridges

U.S. NATIONAL ARCHIVES AND RECORDS ADMINISTRATION (NARA)

29 CFR 1910.1200	Hazard Communication

UNDERWRITERS LABORATORIES (UL)

UL 142	(2002) Steel Aboveground Tanks for Flammable and Combustible Liquids

1.2 MATERIAL AUTHENTICATION DATA INCLUDED IN DESIGN ANALYSIS

The following is submitted in accordance with Section 01330 SUBMITTAL PROCEDURES. It is included in the Design Analysis for this project.

SD-03 Product Data

Tanks

Accessories

Leak detection system

Material safety data sheets

1.3 SUBMITTALS

The following shall be submitted in accordance with Section 01335 SUBMITTAL PROCEDURES for design built project:

SD-10 Operation and Maintenance Data

Tanks

Leak detection system

1.4 QUALITY ASSURANCE

1.4.1 Required Data

Provide six copies of material safety data sheets (MSDS) for materials to be used at the job site in accordance with 29 CFR 1910.1200.

PART 2 PRODUCTS

2.1 WASTE OIL STORAGE TANK - INSTALLED IN VAULT

Tanks installed in vaults shall be single-wall horizontal type. Capacity as indicated. Tank shall be fabricated from mild carbon steel with flat-flanged heads. Interior coatings shall be polyurethane and exterior coatings shall be red primer. All items included with the tank shall be coated with red primer. The tank shall be manufactured in conformance with Underwriter Laboratories UL 142 specifications.

2.2 WASTE OIL STORAGE TANKS - DIRECT BURIED

Direct buried underground waste oil storage tanks shall be double-wall horizontal type. Capacity as indicated. Outer tank shall enclose and provide leak containment across the total surface of the inner main storage tank; where, the inner tank is completely contained within the outer tank. Provide automatic and manual monitoring of interstitial or annular space between inner and outer walls of tank to detect unauthorized release of hydrocarbons or intrusion of water flow from surrounding soil. A leak at any point on the inner or outer wall shall be detectable.

2.2.1 Tank Sumps

Basis of Design: Total Containment, Multisided fiberglass tank sump with watertight cover, AM451630CWT or polyethelene by OPW-Pisces.

2.2.2 Bulkhead Fittings

Basis of Design: Total Containment; For 3/4 inch (19 mm) conduit, use UB2000. For 4 inch (101 mm) pipe, use FB4950.

2.3 TANK ACCESSORIES

2.3.1 Manholes

Provide a minimum of one 600 mm minimum inside diameter size access manhole. Each manhole shall have a matching flanged watertight cover. Provide manways around each piping connection on the tank to prevent soil contamination due to a faulty connection. Combination of piping connections may be grouped in a single manway.

All manholes at ground level shall be capable of withstanding H-20 highway loading as defined by AASHTO HB-17.

2.3.2 Fill Connection

Provide fill line with an overfill protection device in accordance with device manufacturer's standard.

Overfill protection valve or breaker Basis of Design: OPW model# 61SO-4000 or Kobold.

2.3.3 Atmospheric Vent

Provide an atmospheric vent conforming to device manufacturer's standard applicable DIN, BS or EN standards.

2.3.4 Clean-Out and Gage Connection

Provide a combination clean-out and gage connection with each tank and combination shall consist of a 50 mm vapor-tight gage box and a 50 mm pipe extending downward through top of tank to within 75 mm of tank bottom. Manhole outside gage box shall be cast iron and shall be installed in a concrete anchor block. Provide quick opening top lid and malleable iron wrench for removing lid. Provide clean-out and gage pipe assembly with a locking type cap. Provide entire length of pipe inside the tank with 13 mm wide by 300 mm long slots at alternate locations.

2.3.5 Tank Gages

Provide each tank with a float-operated direct reading tank gage. Gage shall fit a 100 mm tank opening and terminate with a sealed cap and body assembly located in a manhole designed to allow for differential settlement of tank and pavement. Gage shall have tapes and floats to allow reading product level. Provide means to wipe condensate (fogging) from viewing glass when reading gage. Provide and install a level transmitter with a remote readout in the annunciator panel located in the control panel room. The level transmitter probe shall be of magnetostrictive type for liquid level measurement. Equip tank with a high-high level switch. High-high alarm shall be on the annunciator panel located in the control room.

2.3.6 Sounding Rod

Provide sounding rod of required length, evenly graduated and marked to read level of waste oil in tank in mm. Tank end of rod shall have a non-sparking cap. Provide two charts showing tank capacity in liters in 3 mm increments.

2.3.7 Sounding Rod Connection

Weld a 300 by 300 by 6 mm thick striker plate directly below rod opening inside steel tanks.

2.3.8 Dielectric Bushings

Provide nylon dielectric bushings on metallic piping connections to steel tanks.

2.3.9 Cathodic Protection

Provide steel corrosion protection system for buried tanks only. Cathodic protection is not required for steel tanks with protective coatings.

2.4 LEAK DETECTION SYSTEM

For buried tanks only provide a continuous surveillance leak detection system located in the leak containment space between the interior and exterior walls of double-wall tanks. System shall detect leakage into containment space by monitoring interstitial pressure, vacuum, or liquid level. Sensor output and transmission shall be electronic. Sensors shall

be compatible with and detect leakage of materials stored in the tank at a rate of 0.00001 L/s with a 95 percent probability of detecting this size leak and a five percent probability of declaring the tank leaking at this rate when, in fact, it may be leaking less as well as ground water which may leak through the outer shell. Panel shall be in an enclosure suitable for the environment and an audible and visual alarm for each zone and battery backup capable of operating the system continuously for a minimum of 48 hours. Panel shall incorporate a self-test system which permits operator verification of proper operation of leak detection equipment. Mount panel where shown on the drawings. Enclose underground cable in PVC coated conduit isolated from the tanks with a dielectric fitting. Provide instructions and equipment required for calibration of the leak detection system and manufacturer's recommended calibration maintenance schedule.

2.5 INTERIOR PROTECTIVE COATING FOR STEEL TANKS

Provide the entire interior of steel waste oil storage tank, including tank and piping manholes, tank nozzles, manhole covers, sump, and interior ladders (if provided) an interior protective coating in accordance with applicable DIN, BS or EN standards.

2.6 NAMEPLATES

Each major item of equipment shall have the manufacturer's name, address, type or style, model or serial number, and catalog number on a plate secured to the item of equipment.

PART 3 EXECUTION

3.1 EARTHWORK

Excavation and backfilling for tanks shall be as specified in Section 02316 "Excavation, Trenching, and Backfilling for Utilities Systems ."

3.2 DELIVERY TIGHTNESS TEST

Pneumatically test the interstitial space of each tank to 20.68 kPag. Maintain this pressure and apply soapsuds or equivalent material to the exterior of the tank. Visually inspect for leaks. Repair leaks in accordance with the manufacturer's instructions.

3.3 STORAGE TANK INSTALLATION

Install manhole extensions and tank connection access pits to prevent load transfer from the surface to the tank shell. Position tanks so that fuel discharge pipes slope up toward fuel outlet. Each tank fill, clean-out and gage connection, and access manway shall extend 200 mm above finished grade. Where tanks are installed under a paved surface, tank connections shall terminate in manhole extensions with tops flush with finished paved surface. Position tanks on a 1 mm per 100 mm slope with fill port and leak detection sensor located at the low end and vent connection at the high end. Holiday test steel tank coating. Defects found shall be corrected and the tank re-tested prior to backfill. Provide a minimum 300 mm thickness of fill material between the bottom of tank and top of the concrete hold-down pad as recommended by the tank manufacturer. Provide hold-down straps and corrosion resistant accessories as recommended by the FRP or composite tank manufacturer. Anchor steel tanks to reinforced concrete mats, separated by fill material and held in place with steel anchor straps. When applicable, inspect steel tank ensure integrity during

backfill operations. Provide saddles for tanks installed in concrete Vaults.

3.4 ELECTRICAL WORK

Provide switches and devices necessary for controlling leak monitoring equipment. Wiring, fittings, and components shall be explosion-proof.

3.5 INSPECTION

Visually inspect the interior of waste oil storage tanks that have an accessible manhole to insure it is free of debris before waste oil is placed inside. Prior to entry insure a safe atmosphere exists.

3.6 HYDROCARBON AND WATER MONITORING SYSTEM TEST

Activate leak monitoring system and test in accordance with manufacturer's instruction.

3.7 HIGH LEVEL ALARM TEST

Fill each tank with appropriate product and verify the high level alarm functions. Verify overfill protection device functions. The Government will provide product.

-- End of Section --

SECTION 13216

UNDERGROUND PETROLEUM TANKS

PART 1 GENERAL

1.1 REFERENCES

The publications listed below form a part of this specification to the extent referenced. The publications are referred to within the text by the basic designation only.

ASTM INTERNATIONAL (ASTM)

ASTM D 1751	(2004) Preformed Expansion Joint Filler for Concrete Paving and Structural Construction (Nonextruding and Resilient Bituminous Types)
ASTM D 1752	(2004a) Preformed Sponge Rubber and Cork Expansion Joint Fillers for Concrete Paving and Structural Construction
ASTM D 4021	(1992) Glass-Fiber-Reinforced Polyester Underground Petroleum Storage Tanks

NATIONAL FIRE PROTECTION ASSOCIATION (NFPA)

NFPA 30	(2003; Errata 2004; Errata 2006) Flammable and Combustible Liquids Code
NFPA 30A	(2003; TIA 2003) Code for Motor Fuel Dispensing Facilities and Repair Garages
NFPA 31	(2006; Errata 2006) Installation of Oil Burning Equipment
NFPA 70	(2005; TIA 2005) National Electrical Code

STEEL TANK INSTITUTE (STI)

STI P3	(2006) Specification Manual for External Corrosion Protection of Underground Steel Storage Tanks

THE SOCIETY FOR PROTECTIVE COATINGS (SSPC)

SSPC SP 5	(2000; E 2004) White Metal Blast Cleaning

U.S. DEPARTMENT OF DEFENSE (DOD)

MIL-PRF-4556	(Rev F; Am 1) Coating Kit, Epoxy, for Interior of Steel Fuel Tanks

U.S. GENERAL SERVICES ADMINISTRATION (GSA)

FS A-A-60005	(Basic) Frames.Covers, Gratings, Steps,

	Sump and Catch Basin, Manhole

U.S. NATIONAL ARCHIVES AND RECORDS ADMINISTRATION (NARA)

29 CFR 1910.1200	Hazard Communication

UNDERWRITERS LABORATORIES (UL)

UL 1316	(1994; Rev May 2006) Glass-Fiber-Reinforced Plastic Underground Storage Tanks for Petroleum Products, Alcohols, and Alcohol-Gasoline Mixtures
UL 1746	(1993; Rev thru Feb 2002) External Corrosion Protection Systems for Steel Underground Storage Tanks
UL 58	(1996; Rev thru Jul 1998) Steel Underground Tanks for Flammable and Combustible Liquids
UL 674	(2003; Rev thru Apr 2006) Electric Motors and Generators for Use in Division 1 Hazardous (Classified) Locations
UL 698	(2006) Industrial Control Equipment for Hazardous (Classified) Locations
UL 886	(1994; Rev thru Nov 2005) Outlet Boxes and Fittings for Use in Hazardous (Classified) Locations

1.2 QUALITY ASSURANCE

1.2.1 Permitting

Contractor shall obtain necessary permits in conjunction with installation of underground petroleum storage tanks as may be required by federal, state, or local authority. Submit a copy of permits to the Contracting Officer.

1.2.2 Registration

Contractor shall obtain required tank registration forms from governing regulatory agencies. Forms shall be completed and provided to the Contracting Officer and installation environmental office 30 days after contract award for their submission to the regulatory agency.

1.2.3 Licensed Personnel

Personnel required to install underground fuel storage tanks shall be licensed/certified by the state when the state requires licensed installers. Submit a copy of license/certification to the Contracting Officer.

1.2.4 Manufacturer's Certification

Tank installers shall be certified by the tank manufacturer on installation procedures. Submit certification from the tank manufacturer to the

Contracting Officer.

1.2.5 Safety

Ensure employees are trained in the requirements of 29 CFR 1910.1200and understand the information contained in the material safety data sheets for their protection against toxic and hazardous chemical effects.

1.3 SUBMITTALS

Government approval is required for submittals with a "G" designation; submittals not having a "G" designation are for information only. When used, a designation following the "G" designation identifies the office that will review the submittal for the Government. The following shall be submitted in accordance with Section 01330 SUBMITTAL PROCEDURES:

SD-03 Product Data

Tanks

Accessories

Leak detection system

Material safety data sheets

SD-06 Test Reports

Delivery tank tightness

Leak monitoring system

Cathodic protection continuity

SD-07 Certificates

Permits

Tank registration forms

Personnel license/certification

Manufacturer's certification

SD-08 Manufacturer's Instructions

Tank installation

1.4 QUALITY ASSURANCE

1.4.1 Required Data

Provide six copies of material safety data sheets (MSDS) for materials to be used at the job site in accordance with 29 CFR 1910.1200.

PART 2 PRODUCTS

2.1 FUEL STORAGE TANKS

Underground fuel storage tanks shall be double-wall horizontal type conforming to NFPA 30, NFPA 30A, and NFPA 31. Capacity as indicated. Outer tank shall enclose and provide leak containment across the total surface of the inner main storage tank by being physically separated from the inner primary containment tank by standoffs; where, the inner tank is completely contained within the outer tank. Provide automatic and manual monitoring of interstitial or annular space between inner and outer walls of tank to detect unauthorized release of hydrocarbons or intrusion of water flow from surrounding soil. A leak at any point on the inner or outer wall shall be detectable. Design and construction of tanks shall comply with UL 1316, ASTM D 4021, STI P3 Type II, or UL 58 Type II with UL 1746 external protection. Tanks constructed with lap shell or head joints in accordance with UL 58 shall be continuous fillet welded; both on the interior and exterior surfaces.

2.2 TANK ACCESSORIES

2.2.1 Manholes

Provide a minimum of one 750 mm minimum inside diameter size access manhole. Each manhole shall have a matching flanged watertight cover conforming to FS A-A-60005. Provide manhole extensions around each manhole of such a length to extend 200 mm above grade. Provide manhole extensions with watertight covers conforming to FS A-A-60005. Piping manholes shall be the same as access manholes with extensions. Provide manways around each piping connection on the tank to prevent soil contamination due to a faulty connection. Combination of piping connections may be grouped in a single manway. Provide piping in accordance with Section 15192 FUEL OIL PIPING.

2.2.2 Fill Connection

Provide fill line with an overfill protection device which automatically shut off fuel supply into the tank when the tank is 95 percent full to each underground storage tank and shall enter at the top of the tank. Fill line shall be 100 mm minimum diameter and extend to within 150 mm of tank bottom. From top of tank, fill line shall extend vertically or shall slope upward on a uniform grade and connected to a tight fit fill adapter with a locking type cap. Tight fit fill adapter shall be bronze, fitted with a fluoroelastomer gasket suitable for fuel being provided. Adapter shall match the fill elbow on the delivery hose to prevent vapor emissions at the fill connection. Provide a 11.3 liters minimum fill port containment unit for the fill adapter that allows differential settlement between tank and ground surface.

2.2.3 Suction Connection

Provide suction line located at the opposite end of tank from fill line. Suction line shall be 100 mm minimum diameter and extend to within 100 mm of the tank bottom unless indicated otherwise.

2.2.4 Atmospheric Vent

Provide an atmospheric vent conforming to applicable requirements of NFPA 30 or NFPA 30A. Vent pipe shall slope back to tank, terminate at least 3.66 m

above grade or 0.61 m above roofs of adjacent buildings, and located so that discharged vapors will not enter building openings, under building eaves, or downspouts. Provide each tank storing products having a vapor pressure greater than 6.9 kPag with a vent terminal outlet with a pressure and vacuum relief breather valve to ensure vapor recirculation between fuel delivery truck and storage tank. Provide dry disconnect adapter to interconnect tank vent system with the delivery truck vapor space. Size of truck vent line connection shall match equipment connections on fuel delivery truck. Provide each tank storing products having a vapor pressure less than 6.9 kPag with a flame arrestor and sized in accordance with NFPA 30.

2.2.5 Clean-Out and Gage Connection

Provide a combination clean-out and gage connection with each tank and combination shall consist of a 50 mm vapor-tight gage box and a 50 mm pipe extending downward through top of tank to within 75 mm of tank bottom. Manhole outside gage box shall be cast iron and shall be installed in a concrete anchor block. Provide quick opening top lid and malleable iron wrench for removing lid. Provide clean-out and gage pipe assembly with a locking type cap. Provide entire length of pipe inside the tank with 13 mm wide by 300 mm long slots at alternate locations.

2.2.6 Tank Gages

Provide each tank with a float-operated direct reading tank gage. Gage shall fit a 100 mm tank opening and terminate with a sealed cap and body assembly located in a manhole designed to allow for differential settlement of tank and pavement. Gage shall have dual tapes and floats to allow reading product level and water level independently. Provide means to wipe condensate (fogging) from viewing glass when reading gage.

2.2.7 Vapor Recovery Connections

Vapor recovery applies to gasoline only, not diesel or #2 fuel oil. Provide each underground storage tank with vapor recovery connections to receive vapor recovery lines from fuel dispensing unit and provide vapor discharge to tank truck during filling operations. Vapor recovery connections are not required on tanks with products having a vapor pressure less than 6.9 kPag.

2.2.8 Sounding Rod

Provide wood sounding rod of required length, evenly graduated and marked to read level of fuel remaining in tank in mm. Rod shall be seasoned maple or other close grained wood. Tank end of rod shall have a non-sparking cap. Provide two charts showing tank capacity in liters in 3 mm increments.

2.2.9 Sounding Rod Connection

Weld a 300 by 300 by 6 mm thick striker plate directly below rod opening inside steel tanks. On fiberglass reinforced plastic (FRP) tanks provide a 300 by 350 by 6 mm thick aluminum plate laminated on inside bottom surface of tank directly below gauging opening.

2.2.10 Dielectric Bushings

Provide nylon dielectric bushings on metallic piping connections to steel tanks.

2.2.11 Cathodic Protection

Provide steel tanks with a cathodic protection system as specified in Section 26 42 13.00 20 CATHODIC PROTECTION BY GALVANIC ANODES. Cathodic protection is not required for steel tanks with UL 1746 protective coatings.

2.3 LEAK DETECTION SYSTEM

Provide a continuous surveillance leak detection system suitable for operation in a NFPA 70, Class l, Division l, Group D environment and located in the leak containment space between the interior and exterior walls of double-wall tanks. System shall detect leakage into containment space by monitoring interstitial pressure, vacuum, or liquid level variations electronically. A liquid sensor in a dry interstitial space will not be acceptable. Sensor output and transmission shall be electronic. Liquids used in containment space shall contain a corrosion inhibitor. Sensors shall be compatible with and detect leakage of materials stored in the tank at a rate of 0.00001 L/s with a 95 percent probability of detecting this size leak and a five percent probability of declaring the tank leaking at this rate when, in fact, it may be leaking less as well as ground water which may leak through the outer shell. Panel shall be in a NEMA enclosure suitable for the environment and an audible and visual alarm for each zone and battery backup capable of operating the system continuously for a minimum of 48 hours. Panel shall incorporate a self-test system which permits operator verification of proper operation of leak detection equipment. Mount panel where shown on the drawings. Enclose underground cable in PVC coated conduit [isolated from the tanks with a dielectric fitting]. Provide instructions and equipment required for calibration of the leak detection system and manufacturer's recommended calibration maintenance schedule.

2.4 INTERIOR PROTECTIVE COATING FOR STEEL TANKS

[Provide each tank with an interior protective coating conforming to MIL-PRF-4556 from the tank bottom up to 450 mm off the bottom. Interior coating shall be a two-coat epoxy coating system consisting of a prime coat and a finish coat to achieve a total dry film thickness of not less than 0.15 mm. Apply coating system in accordance with instructions from the coating manufacturer for application, including surface preparation, application equipment, and appropriate safety precautions. Surface preparation for the area to be coated shall include the following:

a. Grind rough surfaces on welded seams, sharp edges, and corners to a minimum of a 3 mm radius.

b. Abrasive blast surfaces to white metal in accordance with SSPC SP 5.

c. Clean blasted surfaces to remove oil, dust, sand, or other blasting residue and moisture.

d. Apply prime coat within eight hours after cleaning. If visible rusting occurs after cleaning, regardless of the time interval, re-blast rusted surfaces prior to applying primer coat.

Prepare and mix primer and finish coats in accordance with the manufacturers written instructions and apply following manufacturers instructions, allowing proper curing time between prime and finish coats. After completion of finished coat, surfaces shall be inspected by the

Contractor for pinholes, skips, inadequate coating thickness, and other defects. Repair imperfections found in accordance with the coating manufacturers instructions.]

2.5 NAMEPLATES

Each major item of equipment shall have the manufacturer's name, address, type or style, model or serial number, and catalog number on a plate secured to the item of equipment.

PART 3 EXECUTION

3.1 EARTHWORK

Excavation and backfilling for tanks shall be as specified in Section 02300 EARTHWORK.

3.2 DELIVERY TIGHTNESS TEST

Pneumatically test the interstitial space of each tank to 20.68 kPag. Maintain this pressure and apply soapsuds or equivalent material to the exterior of the tank. Visually inspect for leaks. Repair leaks in accordance with the manufacturer's instructions.

3.3 STORAGE TANK INSTALLATION

Tank installation shall be in accordance with NFPA 30, NFPA 30A, and NFPA 31 and performed by personnel certified by the tank manufacturer and State Regulations. Install manhole extensions and tank connection access pits to prevent load transfer from the surface to the tank shell. Position tanks so that fuel discharge pipes slope up toward fuel outlet. Each tank fill, clean-out and gage connection, and access manway shall [extend 200 mm above finished grade] [be flush with finished grade]. Where tanks are installed under a paved surface, tank connections shall terminate in manhole extensions with tops flush with finished paved surface. Position tanks on a 1 mm per 100 mm slope with fill port and leak detection sensor located at the low end and vent connection at the high end. Holiday test steel tank coating. Defects found shall be corrected and the tank re-tested prior to backfill. Provide a minimum 300 mmthickness of fill material between the bottom of tank and top of the concrete hold-down pad as recommended by the manufacture. Provide fiber glass reinforced plastic hold-down straps and corrosion resistant accessories as recommended by the FRP or composite tank manufacturer. Anchor steel tanks to reinforced concrete mats, separated by fill material and held in place with steel anchor straps. Coat straps, turnbuckles, and anchors to resist corrosion. Provide 25 mm wide insulating dielectric straps conforming to ASTM D 1751 or ASTM D 1752 between tank shell and metal straps. Inspect steel tank anodes to ensure integrity during backfill operations.

3.4 ELECTRICAL WORK

Provide switches and devices necessary for controlling leak monitoring equipment. Wiring, fittings, and components shall be explosion-proof in compliance with applicable requirements of UL 674, UL 698, and UL 886 for Class I, Division 1, Group C and D hazardous locations. Electrical installations shall conform to requirements of NFPA 70.

3.5 INSPECTION

Visually inspect the interior of fuel storage tanks that have an accessible manhole to insure it is free of debris before fuel is placed inside. Prior to entry insure a safe atmosphere exists.

3.6 HYDROCARBON AND WATER MONITORING SYSTEM TEST

Activate leak monitoring system and test in accordance with manufacturer's instruction.

3.7 HIGH LEVEL ALARM TEST

Fill each tank with appropriate product and verify the high level alarm functions. Verify overfill protection device functions. The Government will provide product.

-- End of Section --

SECTION 13401

FLOW MEASURING EQUIPMENT

PART 1 GENERAL

1.1 SYSTEM REQUIREMENTS

The flow measuring equipment shall be the electromagnetic meter type. The design shall permit ease of installation and shall not have any features hazardous to personnel or detrimental to the equipment. Provision shall be made to align and adequately lubricate moving parts. Interior parts shall be easily accessible for adjustment, repair, and replacement.

1.2 SUBMITTALS

Government approval is required for submittals with a "G" designation; submittals not having a "G" designation are for information only. When used, a designation following the "G" designation identifies the office that will review the submittal for the Government. Submit the following in accordance with Section 01330 SUBMITTAL PROCEDURES:

SD-03 Product Data

Flow measuring equipment components

Read-out device

SD-08 Manufacturer's Instructions

Flow measuring equipment components

Submit manufacturer's written recommendation for installation handling and operation.

PART 2 PRODUCTS

2.1 MATERIALS AND EQUIPMENT

Unless otherwise specified, all materials and equipment shall be standard commercial products in regular production by the manufacturer and suitable for the required service.

2.1.1 Electromagnetic Meter

Provide a magnetic flow meter where indicated. The magnetic flow meter shall be suitable for installation in a ductile iron pipe. Flowmeter shall be suitable for out door installaton, inside a manhole, where ambient temperatures range from -6 degrees C to 45 degrees C. The flow meter shall be able to operate where there is intermittent flow (no flows at times), but where flow meter will remain full at all times. The magnetic flow meter system shall include a flow tube and remote read-out receiver. Flow meter shall provide a 4-20 mA signal for transmission of signal. For flowrate indication and integration and for control of chemical pump feedrate. Accuracy shall be plus or minus one percent over the design flow range with upstream length of unobstructured flow equal to 5 pipe diameters and downstream length of unobstructed flow equal to 3 pipe diameters.

2.2 READ-OUT DEVICE

Provide the meter with a read-out device which shall read from 0 to 110 cubic meters per hour.

2.2.1 Remote Read-Out

Provide an indicator and an integrator for remote read-out of flow. The scale graduation shall be uniform. The read-out shall be visible through a shatterproof clear window. The read-out mechanism shall not be affected by the intended end use environment. The unit shall be non-corrosive and weatherproof and design to prevent the accumulation of moisture or fog inside the case. Device shall be mounted where shown on Drawings. Read-out device shall be able to be mounted in any orientatin.

2.2.1.1 Indicator

Shall read out in cubic meters per hour.

2.2.1.2 Integrator

Shall read the total flow in cubic meters.

2.3 SPARE PARTS

Provide all standard recommended spare parts as specified in the manufacturer's instruction manuals for each component in the system.

PART 3 EXECUTION

3.1 MATERIALS PROTECTION

Furnish flow meter and appurtenances in accordance with the manufacturer's standard practice suitable for end use environment.

3.2 INSTALLATION

Install per manufacturer's recommendation.

3.3 FIELD TESTS AND INSPECTIONS

Test and calibrate in place the flow measuring equipment to demonstrate that it meets the accuracy requirements for the full range of flows specified herein. Labor, equipment, and incidentals required for the tests, including electric power and water required for tests shall provide by others. The Government's Contracting Officer will witness all field tests and conduct all field inspections. Rectify any deficiencies found and retest work affected by such deficiencies at the flow meter supplier's expense. Record data from each field test shall be recorded and documented in a formal field test report.

-- End of Section --

SECTION 13855

FIRE DETECTION EQUIPMENT

PART 1 GENERAL

1.1 REFERENCES

The publications listed below form a part of this specification to the extent referenced. The publications are referred to in the text by basic designation only.

NATIONAL FIRE PROTECTION ASSOCIATION (NFPA)

NFPA 72	(1999) National Fire Alarm Code
NFPA 90A	(1999) Installation of Air Conditioning and Ventilating Systems

UNDERWRITERS LABORATORIES (UL)

UL 268A	(1998) Smoke Detectors for Duct Application

1.2 MATERIAL AUTHENTICATION DATA INCLUDED IN DESIGN ANALYSIS

The following is submitted in accordance with Section 01335 SUBMITTAL PROCEDURES FOR DESIGN/BUILD PROJECT. It is included in the Design Analysis for this project.

SD-03 Product Data

Smoke Detectors

Substantiating audible notification requirements.

1.3 SUBMITTALS

The following shall be submitted in accordance with Section 01335 SUBMITTAL PROCEDURES for design built project:

SD-10 Operation and Maintenance Data

Smoke Detector Operation and Maintenance Data

Two copies of operating instructions outlining step-by-step procedures required for operation. The instructions shall include the manufacturer's name, model number, service manual, parts list, and complete description of equipment and their basic operating features. Six copies of maintenance instructions listing routine maintenance procedures, possible breakdowns and repairs, and troubleshooting guide. The instructions shall include conduit layout, equipment layout and simplified wiring as installed.

1.4 DOCUMENTATION FOR PROPOSED VARIANT PRODUCTS

For products not explicitly named in the specification that meet product

requirement criteria named herein, product data as listed in article titled MATERIAL AUTHENTICATION DATA INCLUDED IN DESIGN ANALYSIS shall be submitted for review. Product information will be provided to establish that proposed product meets the requirements of this specification and has the indicated qualities related to type, function, dimension, in-service performance, physical properties, appearance, or other relevant characteristics that equal or exceed those of specified product. Product is consistent with the Contract Documents and will produce the indicated results, and is compatible with other portions of the Work.

1.5 GENERAL REQUIREMENTS

1.5.1 Compliance

The fire detection equipment furnished shall be compatible and be approved or listed in accordance with the applicable DIN, BS, EN, or I.E.C. standards.

1.6 DELIVERY AND STORAGE

Equipment delivered and placed in storage shall be stored with protection from the weather, humidity and temperature variation, dirt, dust, and any other contaminants.

PART 2 PRODUCTS

2.1 MANUFACTURERS

Basis of Design: Detectomat.

Acceptable Manufacturers:

1. Basis of Design manufacturer.
2. Equivalent product complying with requirements of this specification for proposed variant products.

2.2 FIRE DETECTING DEVICES

Fire detecting devices shall comply with the applicable requirements of DIN, or I.E.C. standards. The detectors shall be provided as indicated on Drawings. Detector base shall have screw terminals for making connections. No solder connections will be allowed.

Basis of Design: Detectomat.

2.2.1 Heat Detectors

Heat detectors shall be designed for detection of fire by fixed temperature. Heat detector spacing shall be rated in accordance with DIN, BS, or EN standards. Detectors located in multipurpose areas, kitchen, dishwash area and other areas as directed by Contracting Officer, shall be types approved for such locations. Heat detectors located in attic spaces or similar concealed spaces below the roof shall be intermediate temperature rated.

2.2.1.1 Fixed Temperature Detectors

Detectors shall be designed for surface outlet box mounting and supported independently of wiring connections. Detectors shall be designed to detect

high heat. The detectors shall have a specific temperature setting of 57.2 degrees C. . The DIN, I.E.C., BS or EN standards test rating for the fixed temperature detectors shall be rated for 4.57 by 4.57 m.

2.2.2 Smoke Detectors

Smoke detectors shall be designed for detection of abnormal smoke densities. Smoke detectors shall be photoelectric type. Detectors shall contain a visible indicator LED that shows when the unit is in alarm condition. Detectors shall not be adversely affected by vibration or pressure. Detectors shall be the hardwired type in which the detector base contains terminals for making wiring connections to 120 volts AC. Detectors shall be interconnected to all smoke detectors and duct detectors in order that detection by any single unit shall activate notification on all units. Smoke detectors shall comply with NFPA 72 for the design, spacing, wiring and location of initiating devices.

2.2.2.1 Photoelectric Detectors

Detectors shall operate on a light scattering concept using an LED light source. Failure of the LED shall not cause an alarm condition. Detectors shall be factory set for sensitivity and shall require no field adjustments of any kind. Detectors shall have an obscuration rating in accordance with DIN, or I.E.C. standards.

2.2.2.2 Duct Detectors

Duct-mounted photoelectric smoke detectors shall be furnished and installed where indicated and in accordance with NFPA 90A. Units shall consist of a smoke detector as specified in paragraph Photoelectric Detectors, mounted in a special housing fitted with duct sampling tubes. Detector circuitry shall be mounted in a metallic enclosure exterior to the duct. Detectors shall have a manual reset. Detectors shall be rated for air velocities applicable to project. full width of the duct. The duct detector package shall conform to the requirements of NFPA 90A, UL 268A, DIN, BS, EN standards, and shall be UL listed for use in air-handling systems. Duct detectors shall be interconnected to smoke alarms so that detection of smoke in the duct will activate all smoke detector alarms. Lights to indicate the operation and alarm condition; and the test and reset buttons shall be visible and accessible with the unit installed and the cover in place. Detectors mounted above 1.83 m and those mounted below 1.83 m that cannot be easily accessed while standing on the floor, shall be provided with a remote detector indicator panel containing test and reset switches. Remote lamps and switches as well as the affected fan units shall be properly identified in etched plastic placards. Detectors shall have auxiliary contacts to provide control, interlock, and shutdown functions specified in Section 15950 HEATING, VENTILATING AND AIR CONDITIONING (HVAC) CONTROL SYSTEMS. The detectors shall be supplied by the smoke detector manufacturer to ensure complete system compatibility.

2.2.2.3 Audible Notification

Audible notification feature shall conform to the applicable requirements of DIN, or I.E.C. standards. Audible feature shall generate a unique audible sound from other devices provided in the building and surrounding area. Alarm horns shall be integral with smoke detector unit and shall produce a sound rating of at least 85 dBA at 3.05 m.

2.3 FIRE DETECTION PERIPHERAL EQUIPMENT

2.3.1 Conduit

Conduit and fittings shall comply with DIN, or I.E.C. standards.

2.3.2 Wiring

Wiring shall conform to DIN, or I.E.C. standards. Wiring for AC voltage power shall be 4 mm minimum. Field wiring shall be solid copper and installed in metallic conduit or electrical metallic tubing, except rigid plastic conduit may be used under slab-on-grade. Conductors shall be color coded. Conductors used for the same functions shall be similarly color coded. Wiring code color shall remain uniform throughout the circuit.

PART 3 EXECUTION

3.1 INSTALLATION

All work shall be installed as shown, and in accordance with DIN, or I.E.C. standards, and in accordance with the manufacturer's diagrams and recommendations, unless otherwise specified. Smoke detectors shall not be installed until construction is essentially complete and the building has been thoroughly cleaned.

3.1.1 Power Supply for the System

A single dedicated circuit connection for supplying power from a branch circuit to each building fire alarm system shall be provided. The power shall be supplied as shown on the drawings. Emergency power shall be provided by an uninterruptible power supply at the panelboard location.

3.1.2 Wiring

Conduit size for wiring shall be in accordance with DIN, or I.E.C. standards. Wiring shall not be installed in conduits, junction boxes, or outlet boxes with conductors of lighting and other power systems. Not more than two conductors shall be installed under any device screw terminal. The wires under the screw terminal shall be securely clamped in place under the screw terminal. The wires shall be broken and not twisted around the terminal. Circuit conductors entering or leaving any mounting box, or outlet box enclosure shall be connected to screw terminals with each terminal and conductor marked in accordance with the wiring diagram. Connections and splices shall be made using screw terminal blocks. The use of wire nut type connectors in the system is prohibited. Wiring shall be readily accessible without removing any component parts.

3.1.3 Detectors

Detectors shall be located and installed in accordance with NFPA 72. Duct detectors shall be installed per NFPA 90A. Detectors shall be connected as indicated on the drawings. Detectors shall be at least 300 mm from any part of any lighting fixture. Detectors shall be located at least 900 mm from diffusers of air handling systems. Each detector shall be provided with appropriate mounting hardware as required by its mounting location. Detectors which mount in open space shall be mounted directly to the end of the stubbed down rigid conduit drop. Conduit drops shall be firmly secured to minimize detector sway. Where length of conduit drop from ceiling or wall surface exceeds 900 mm, sway bracing shall be provided. Detectors

installed in concealed locations (above ceiling, raised floors, etc.) shall have a remote visible indicator LED/LCD in a finished, visible location.

3.2 GROUNDING

Grounding shall be provided by connecting to building ground system.

3.3 TESTING

The Contractor shall notify the Contracting Officer before the preliminary and acceptance tests are to be conducted. The tests shall be performed in accordance with the approved test procedures in the presence of the Contracting Officer. The Contractor shall furnish instruments and personnel required for the tests.

3.3.1 Preliminary Tests

Upon completion of the installation, the system shall be subjected to functional and operational performance tests including tests of each installed initiating and notification appliance, when required. Tests shall include the meggering of system conductors to determine that the system is free from grounded, shorted, or open circuits. The megger test shall be conducted prior to the installation of equipment. If deficiencies are found, corrections shall be made and the system shall be retested to assure that it is functional. After completing the preliminary testing the Contractor shall complete and submit the DIN, or I.E.C. standards, Certificate of Completion.

3.3.2 Acceptance Test

Acceptance testing shall not be performed until the Contractor has completed and submitted the Certificate of Completion. Testing shall be in accordance with DIN, or I.E.C. standards. The recommended tests in DIN, or I.E.C. standards shall be considered mandatory and shall verify that previous deficiencies have been corrected. The Contractor shall complete and submit the Inspection and Testing Form. The test shall include all requirements of DIN, or I.E.C. standards and the following:

a. Tests of alarm notification features, individually and systemwide.

b. Complete operational tests under emergency power supply.

c. Visual inspection of wiring connections.

d. Opening the circuit at each detection device and notification appliance to test the wiring supervisory feature.

e. Ground fault.

f. Short circuit faults.

g. Stray voltage.

-- End of Section --

SECTION 14630

OVERHEAD ELECTRIC CRANES

PART 1 GENERAL

1.1 REFERENCES

The publications listed below form a part of this specification to the extent referenced. The publications are referred to within the text by the basic designation only.

AMERICAN GEAR MANUFACTURERS ASSOCIATION (AGMA)

AGMA 2000	(1988; Rev A) Gear Classification and Inspection Handbook Tolerances and Measuring Methods for Unassembled Spur and Helical Gears (Including Metric Equivalents)
AGMA 2001	(1995; Rev C) Fundamental Rating Factors and Calculation Methods for Involute Spur and Helical Gear Teeth
AGMA 6009	(2000; Rev A) Standard for Gearmotor Shaft Mounted and Screw Conveyor Drives
AGMA 6010	(1997; Rev F) Standard for Spur, Helical, Herringbone, and Bevel Enclosed Drives

AMERICAN INSTITUTE OF STEEL CONSTRUCTION (AISC)

AISC 316	(1989) ASD Manual of Steel Construction

AMERICAN WELDING SOCIETY (AWS)

AWS D1.1/D1.1M	(2004) Structural Welding Code - Steel
AWS D14.1	(1997) Welding Industrial and Mill Cranes and Other Material Handling Equipment

ASME INTERNATIONAL (ASME)

ASME B30.16	(2003) Overhead Hoists (Underhung)
ASME B30.17	(2003) Overhead and Gantry Cranes (Top Running Bridge, Single Girder, Underhung Hoists)
ASME B30.2	(2002) Overhead and Gantry Cranes (Top Running Bridge, Single or Multiple Girder, Top Running Trolley Hoist)
ASME HST-1	(1999; R 2004) Electric Chain Hoists
ASME HST-4	(1999; R 2004) Overhead Electric Wire Rope

	Hoists
ASME HST-5	(1999; R 2004) Air Chain Hoists
ASME HST-6	(1999) Air Wire Rope Hoists

ASTM INTERNATIONAL (ASTM)

ASTM A 159	(1983; R 2001) Automotive Gray Iron Castings
ASTM A 325M	(2004b) Structural Bolts, Steel, Heat Treated, 830 Mpa Minimum Tensile Strength (Metric)
ASTM A 490M	(2004a) High-Strength Steel Bolts, Classes 10.9 and 10.9.3, for Structural Steel Joints (Metric)
ASTM A 668/A 668M	(2004) Steel Forgings, Carbon and Alloy, for General Industrial Use
ASTM B 438/B 438M	(2004) Sintered Bronze Bearings (Oil Impregnated)
ASTM B 439	(2000e1) Iron-Base Sintered Bearings (Oil-Impregnated)
ASTM B 612	(2000) Iron Bronze Sintered Bearings (Oil-Impregnated)
ASTM B 633	(1998e1) Electrodeposited Coatings of Zinc on Iron and Steel
ASTM E 125	(1963; R 2003) Photographs for Magnetic Particle Indications on Ferrous Castings

CRANE MANUFACTURERS ASSOCIATION OF AMERICA (CMAA)

CMAA 70	(2004) EnviroTop Running and Bridge and Gantry Type Multiple Girder Electric Overhead Traveling Cranes, No. 70
CMAA 74	(2004) Top Running and Under Running Single Girder Electric Overhead Cranes Utilizing Under Running Trolley Hoist, No. 74

NATIONAL ELECTRICAL MANUFACTURERS ASSOCIATION (NEMA)

NEMA ICS 2	(2000; R 2004) Industrial Controls and Systems: Controllers, Contactors, and Overload Relays Rated Not More than 2000 Volts AC or 750 Volts DC
NEMA ICS 6	(1993; R 2001) Industrial Control and Systems: Enclosures
NEMA MG 1	(2003; R 2004) Motors and Generators

NATIONAL FIRE PROTECTION ASSOCIATION (NFPA)

NFPA 70	(2005) National Electrical Code

UNDERWRITERS LABORATORIES (UL)

UL 1004	(1994; Rev thru Feb 2001) Electric Motors
UL 1449	(1996; Rev thru Jul 2002) Transient Voltage Surge Suppressors
UL 489	(2002; Rev thru May 2003) Molded-Case Circuit Breakers, Molded-Case Switches, and Circuit-Breaker Enclosures
UL 50	(1995; Rev thru Sep 2003) Enclosures for Electrical Equipment

1.2 SUBMITTALS

Government approval is required for submittals with a "G" designation; submittals not having a "G" designation are for information only. When used, a designation following the "G" designation identifies the office that will review the submittal for the Government. The following shall be submitted in accordance with Section 01330 SUBMITTAL PROCEDURES:

SD-02 Shop Drawings

Electric Overhead Cranes; G AED

Detail drawings containing complete wiring and schematic diagrams. Diagrams shall indicate each numbered wire, where wire initiates, where wire terminates, and any other details required to demonstrate that the system has been coordinated and will properly function as a unit. Drawings shall show layout and anchorage of equipment and appurtenances, and equipment relationship to other parts of the work including clearances for maintenance and operation.

SD-03 Product Data

Crane Design Criteria

A complete list of equipment and materials, including manufacturer's descriptive data and technical literature, performance charts and curves, catalog cuts, and installation instructions.

Hooks

Hook material and any heat treatment performed, stamped on the hook shank or documented in certification papers furnished with the hooks. Crane test data recorded on appropriate test record forms suitable for retention for the life of the crane.

Electric Overhead Cranes

A complete list of equipment and materials, including

manufacturer's descriptive data and technical literature, performance charts and curves, catalog cuts, and installation instructions.

Spare Parts

Spare parts data for each different item of material and equipment specified, after approval of the detail drawings and not later than 3 months prior to the date of beneficial occupancy. The data shall include a complete list of parts and supplies, with current unit prices and source of supply.

Framed Instructions

Diagrams, instructions and safety requirements.

SD-06 Test Reports

Acceptance Testing

Test reports in booklet form showing all field tests performed to adjust each component and all field tests performed to prove compliance with the specified performance criteria, upon completion and testing of the installed system. The report shall include the information as required by paragraph ACCEPTANCE TESTING.

SD-10 Operation and Maintenance Data

Operation and Maintenance Manuals; G RE

Number of copies copies of operation and maintenance manuals for the equipment furnished shall be in accordance with Section 01330 SUBMITTAL PROCEDURES. One complete set prior to performance testing and the remainder upon acceptance. Operation manuals shall detail the step-by-step procedures required for system startup, operation and shutdown. Operation manuals shall include the manufacturer's name, model number, parts list, and brief description of all equipment and basic operating features. Maintenance manuals shall list routine maintenance procedures, possible breakdowns and repairs, and troubleshooting guides. Maintenance manuals shall include piping and equipment layout and simplified wiring and control diagrams of the system as installed. Operation and maintenance manuals shall be approved prior to the field training course.

1.3 QUALIFICATION

Electric overhead cranes shall be designed and manufactured by a company with a minimum of 10 years of specialized experience in designing and manufacturing the type of overhead crane required to meet requirements of the Contract Documents.

1.4 TESTING AND INSPECTIONS

1.4.1 Pre-Delivery Inspections

Contractor shall be responsible for performance of quality control inspections, testing and documentation of steel castings, hook assembly and

nuclear safety as follows.

1.4.2 Inspection of Steel Castings

Load-carrying steel castings shall be visually inspected and tested using the magnetic-particle inspection method. Allowable degree of discontinuities shall be referenced to ASTM E 125, and shall be related to service loads and stresses, critical configuration, location and type. Methods of repairing the discontinuities shall be subject to review by the Contracting Officer.

1.4.3 Inspection of Hook Assembly

Hook and nut shall be inspected by a magnetic-particle type inspection or X-rayed prior to delivery. Documentation of hook inspection shall be furnished to Contracting Officer at the field operational testing. As part of the acceptance standard, linear indications will not be allowed. Welding repairs of hook will not be permitted. A hook showing linear indications, damage or deformation will not be accepted, and shall be replaced.

1.5 DESIGN CRITERIA

Cranes shall operate in the given spaces and shall match the runway dimensions and rails indicated. Hook coverage, hook vertical travel, clear hook height, lifting capacity, and load test weight shall not be less than that indicated.

1.5.1 General

The hoisting equipment shall include the following:

Location	Number of Cranes	Capacity (Metric Tons)
Maintenance Garage (3-Bay)	1	2-Ton
Maintenance Garage (9-Bay)	2	1 each - 2-Ton 1 each - 10-Ton

1.5.1.1 Welding

Welding shall be in accordance with qualified procedures using AWS D14.1 as modified. Written welding procedures shall specify the Contractor's standard dimensional tolerances for deviation from camber and sweep and such tolerances shall not exceed those specified in AWS D14.1. All welding shall be performed indoors. Welders and welding operators shall be qualified in accordance with AWS D1.1/D1.1M or AWS D14.1. Allowable stress values shall be in accordance with CMAA 70.

1.5.1.2 Crane Design Criteria

The cranes shall be designed to operate in the spaces and match the runway dimensions and rails indicated. The hook coverage and hook vertical travel shall not be less than that indicated.

1.5.2 Classification

Crane shall be designed and constructed to CMAA 70 Class B, service requirements for operation in indoor non-hazardous environment with hoist in accordance with ASME HST-1, ASME HST-4, ASME HST-5 and ASME HST-6.

1.5.3 Rated Capacity and Speeds

Rated capacity of crane shall be 5 and 15 metric tons as shown on the applicable building drawings. Lower load block or assembly of hook, swivel bearing sheaves, pins and frame suspended by the hoisting ropes shall not be considered part of the rated capacity. Rated speeds (in meters/second) for the hoist, bridge and trolley at the rated load shall be as follows:

	Rated Speeds meters per second	
Description	Minimum	Maximum
Main Hoist	0.013	0.083
Trolley	0.083	0.33
Bridge	0.083	0.33

1.6 DELIVERY AND STORAGE

Equipment delivered and placed in storage shall be stored with protection from the weather, humidity and temperature variations, dirt and dust, and other contaminants.

1.7 FIELD MEASUREMENTS

Before performing any work, Contractor shall become familiar with all details of the work, verify all dimensions in the field, and submit a letter describing the results of this verification including discrepancies to the Contracting Officer and crane manufacturer.

PART 2 PRODUCTS

2.1 MATERIALS

2.1.1 General

Materials and equipment shall be standard products of manufacturers regularly engaged in the fabrication of complete and totally functional cranes including necessary ancillary equipment.

2.1.2 Nameplates

Nameplates shall be secured to each major component of equipment with the manufacturer's name, address, type or style, model or catalog number, and serial number. Two bridge identification plates shall be provided, one for each side of bridge. Identified plates shall be noncorrosive metal with letters which are easily read from the floor, showing a separate number such as BC-1, BC-2, for each bridge crane.

2.1.3 Use of Asbestos Products

Materials and products required for designing and manufacturing cranes shall not contain asbestos.

2.1.4 Capacity Plates

Two capacity plates indicating the crane capacity in metric tons are

required, one secured to each side of bridge. Each capacity plate shall be fabricated of a steel backing plate and exterior quality/fade-resistant stick-on labels with letters large enough to be easily read from the floor. Capacity plates shall be placed in a location visible to pendant operator's position after the crane has been installed.

2.1.5 Safety Warnings

Readable warning labels shall be affixed to each lift block or control pendant in a readable position in accordance with ASME B30.16, ASME B30.2 and ASME B30.17. The Contractor shall submit these safety warnings, diagrams and other framed instructions for display as indicated by the Contractin Officer.

a. The word "WARNING" or other legend shall be designed to bring the label to the attention of the operator. Warning labels shall be durable type and display the following information concerning safe-operating procedures: Cautionary language against lifting more than the rated load; operating the hoist when the hook is not centered under the hoist; operating hoist with twisted, kinked or damaged rope; operating damaged or malfunctioning hoist; operating a rope hoist with a rope that is not properly seated in its hoist drum groove; lifting people; lifting loads over people; and removing or obscuring the warning label.

b. To avoid operation of crane in the wrong direction, the words "FORWARD" and "REVERSE" and accompanying directional arrows shall be affixed in a location on the trolley and bridge which are visible and readable to the operator from pendant station. The words "FORWARD" and "REVERSE" shall agree with the markings on control pendant. Directional arrows shall not be indicated on control pendant.

2.2 STRUCTURAL MATERIALS

2.2.1 Bolts, Nuts and Washers

High-strength bolted connections shall utilize SAE Grade 5 bolts with corresponding lockwashers, nuts, etc., conforming to requirements of AISC 316 bolts. Bolts, nuts and washers shall conform to ASTM A 325M bolts. Galvanized bolts are not acceptable. ASTM A 490M bolts shall not be used.

2.2.2 Bridge Girder or Girders

Bridge girders shall be welded structural steel box sections, wide flange beams, standard I-Beams, reinforced beams or sections fabricated from rolled plates and shapes.

2.2.3 Bridge Rails or Bars

Trolley runway rails, crane girders and other sections shall be straight and true. When loaded with motor driven cranes the deflection of rails shall not exceed 1/800 of the span. The deflection shall be calculated with the worst case of two loaded bridge cranes located adjacent each other. Rail joints shall be flush and true without misalignment of running tread and shall be designed to minimize vibration. The gap between adjacent rail ends and the vertical misalignment of running treads shall not exceed 1.588 mm . The bridge rail shall be leveled to a plus-or-minus 3 mm at all rail support joints. Bridge rail shall be fastened to top

cover plate, wide flange or centered on flange or offset near web plate for welded box sections, complete with welded clips. Bridge rail joints shall be bolted using standard joint bars. Rail joints shall be staggered. A positive stop shall be provided at bridge rail ends to prevent creep.

2.2.4 End Ties and Bridge Girder End Connections

Welded steel box sections shall be used for end ties, full depth diaphragms shall be provided at girder connections and jacking points. Horizontal gusset plates shall be provided at the elevation of top and bottom end tie flanges for connection to girder ends. End connections shall be made with high-strength bolts. Body-bound bolts fitted in drilled and reamed holes shall be used to maintain the crane square.

2.2.5 Bridge End Trucks

End trucks shall be the rotating or fixed axle type fabricated of structural tubes or from structural steel to provide a rigid box section structure. Jacking pads shall be provided for removal of wheel assemblies.

2.2.6 Stops and Bumpers

Crane runways and bridge girders shall be fitted with structural steel end stops. Bridge end trucks and trolley frames shall be fitted with shock-absorbing spring type bumpers capable of decelerating and stopping the bridge and/or trolley within the limits stated by OSHA and MHI CMAA. Trolley end stops shall be of sufficient strength to withstand the impact of a fully loaded trolley moving at 50 percent of maximum rated travel speed. When two bridge cranes are on the same runway, one crane shall be fitted with shock-absorbing bumpers on each end of each end-truck, and the other crane shall have shock-absorbing bumpers as per above on one end only of each end-truck which is the opposite end of the adjacent crane. The other end of the end-truck shall be fitted with a structural steel stop to engage the bumpers of the adjacent crane. Bridge bumper stops shall be provided as specified in Section 05120 STRUCTURAL STEEL. Stops shall be located to permit maximum bridge and trolley travel.

2.2.7 Runway Rails

The runway rail size shall be as recommended by crane manufacturer.

2.3 MECHANICAL EQUIPMENT

2.3.1 Drives

2.3.1.1 Bridge Drives

Bridge drives shall be A-4 drive arrangement as specified in CMAA 70 or CMAA 74. Bridge drive shall consist of a single electric motor mechanically connected through gear reduction and drive shafts to the drive wheels or separate drive motors at each end of bridge. Acceleration and deceleration shall meet the requirements specified in this section. Gears shall conform to applicable AGMA standards. Gear reducers shall be oil tight and fully enclosed with pressure or splash type lubrication. Bridge-travel limit-switches are optional.

2.3.1.2 Trolley Drives

Trolley shall be complete with a drive arrangement with a minimum of two

wheels driven by an integral electric motor. Drive mechanism shall run in totally enclosed oil bath. Limit switches are optional for drive mechanism. Acceleration and deceleration controls shall meet requirements specified in this section.

2.3.2 Load Blocks

2.3.2.1 Main Hoist Load Blocks

Load blocks shall be of welded steel construction. Load blocks shall be provided with hot-rolled or forged steel fixed crosshead separate from the sheave pin with swivel mounting for forged steel hook. Each lubrication fitting for sheave pins shall be an independent type recessed within the sheave pin or adequately guarded to prevent damage. The pitch diameter of the sheaves shall be not less than 16 times the rope diameter. Sheaves shall be supported by roller type bearings on steel sheave pins. Provisions for external lubrication shall be provided to allow pressure relief and purging of old grease. Sheave blocks shall be constructed to provide maximum personnel safety and to prevent the hoist rope from leaving the sheaves under normal operating condition.

2.3.2.2 Hook Assembly

Hooks shall be single barbed and shall be made of forged steel complying with ASTM A 668/A 668M. Hooks shall be fitted with safety latches designed to preclude inadvertent displacement of slings from the hook saddle. Painting or welding shall not be performed on the hook. Hook nut shall be secured with a removable type set screw or other similar fastener, but shall not be welded. Hooks shall be designed and commercially rated with safety factors in accordance with MHI CMAA. The hook shall be free to rotate through 360 degrees when supporting the rated load.

2.3.3 Hoisting Ropes

Hoisting ropes shall be regular lay, preformed, uncoated, improved plow steel, 6 by 37 construction, with independent wire rope core. Ropes shall be suited to meet the service requirements. Rope socketing or U-bolt clip connections shall be made in accordance with clip or rope manufacturer's recommendation, and shall be equal to or greater than the rope strength. Hoisting ropes shall be the rated capacity load plus the load block weight divided by the number of rope parts, and shall not exceed 20 percent of the certified breaking strength of rope. Hoisting ropes shall be secured to hoist drum so that no less than two wraps of rope remain at each anchorage of hoist drum at the extreme low position (limit switch stop).

2.3.4 Sheaves

Sheaves shall be of cast, forged, rolled, or welded structural steel. Sheave grooves shall be accurately machined, smoothly finished and free of surface defects.

2.3.5 Hoist Drums

Hoist drums shall be of welded rolled structural steel, cast steel, or seamless steel pipe. Drums shall be machined and provided with right-hand and left-hand grooves to take the full run of cable for the required lift without overlapping, plus a minimum of two full wraps of cable when load is on floor. At least one groove shall remain unused when hook is at the highest position. Drum grooves shall be cut from solid stock and have

sufficient depth for size of cable required. Drum flanges shall be guarded so that the cable cannot wedge between drum flange and hoist frame.

2.3.6 Gearing

Gearing shall be of the enclosed gear reducers type. Gears and pinions shall be spur, helical, or herringbone type only, and shall be forged, cast or rolled steel; open-type gearing is not acceptable. Gears and pinions shall have adequate strength and durability for the crane service class and shall be manufactured to AGMA 2001 Quality Class 6 or better precision per AGMA 2000.

2.3.6.1 Gear Reducers

Gear reducers shall be standard items of manufacturers regularly engaged in the design and manufacture of gear reducers for Class D and G cranes or shall be integral components of standard hoists or hoist/trolley units of manufacturers regularly engaged in the design and manufacture of hoists or hoist/trolley units for Class A, B or C cranes. Gear reducers shall be designed, manufactured and rated in accordance with AGMA 6010, or AGMA 6009 (for trolley drives only), as applicable. Except for final reduction, the gear reduction units shall be fully enclosed in oil-tight housing. Gearing shall be designed to AGMA standards and shall operate in an oil bath. Operation shall be smooth and quiet.

2.3.6.2 Open Gearing

All gears and pinions shall have adequate strength and durability for the crane service class and manufactured to AGMA 2001 quality class 6 or better precision per AGMA 2000. Open gears shall be enclosed with safety guards provided with openings with covers for inspection and access for grease lubrication.

2.3.7 Brakes

Brakes shall be of the shoe, disc, or conical type with thermal capacity suitable for class and service specified in this section. Shoe, disc, and conical brakes shall be spring-set and electrically-released by a continuously rated direct acting magnet. Brakes shall be self-aligning and provide for easy adjustment for torque setting and lining wear. Brake lining material shall be asbestos free. Brake wheels shall be cast iron conforming to ASTM A 159 or shall be the manufacturer's standard high-strength ductile cast-iron, provided that the material exhibits wear characteristics in the form of powdered wear particles and is resistant to heat-checking. Disc brakes shall be totally enclosed and have multiple discs with stationary releasing magnets. Brake torque shall be easily adjustable over a 2:1 torque range.

2.3.7.1 Hoist Holding Brakes

Each hoist shall be equipped with at least 2 holding brakes. Holding brake shall be disc, shoe, or conical design, applied to one of the following: motor shaft or gear reducer shaft or rope drum. Braking system shall be designed to have zero hook lowering motion when a raise motion is initiated. Primary brake shall be a spring-set, electrically-released, disc, shoe, or conical type brake. Brake shall have a minimum torque rating of 150 percent of motor torque. Brake shall be capable of holding the rated load with zero hook drift. Primary brake shall be automatically set when controls are released or when power is interrupted. Provisions

shall be made to facilitate easy brake adjustment. Hoists shall be furnished with mechanical-control braking or a power-control braking system. Typical power means include dynamic lowering, eddy-current braking, counter-torque, regenerative braking, variable frequency, and adjustable or variable voltage.

2.3.7.2 Hoist Control Brake

Each hoist shall be provided with electrically-controlled braking system to prevent overspeeding.

2.3.7.3 Trolley Brake

Trolley braking system shall be provided with spring-applied and electrically-released shoe, disc, or conical brakes. Braking system shall be automatically set when controls are released or power is interrupted. Provisions shall be made to facilitate easy brake adjustment. Brakes shall have a torque rating of at least 50 percent of trolley drive motor rated torque.

2.3.7.4 Bridge Brakes

Bridge braking system shall be provided with a spring-applied and electrically-released single shoe, disc, or conical brake for each bridge drive motor. Braking system shall be automatically set when controls are released or power is interrupted. Provisions shall be made to facilitate easy brake adjustment. Brakes shall have a torque rating of at least 50 percent of bridge drive motor rated torque.

2.3.8 Wheels

Wheels shall be manufactured of rolled or forged steel. Bridge and trolley wheels shall be double-flanged. Trolley wheels shall have straight treads. Bridge wheels shall have straight treads. Wheels shall be equipped with self-aligning double-row spherical roller-bearings of capacity as recommended by bearing manufacturer for design load of trolley or bridge.

2.3.9 Bearings

Bearings shall be antifriction type, except bearings which are subject only to small rocker motion. Equalizer sheaves shall be equipped with sintered oil-impregnated type bushings in accordance with ASTM B 438/B 438M, ASTM B 439, or ASTM B 612.

2.3.10 Anti-Drip Provisions

Cranes shall be designed to preclude leakage of lubricants onto the lifted loads or the floor. Equipment and components which cannot be made leak-proof shall be fitted with suitable drip pans. Drip pans shall be manufactured of steel and designed to permit removal of collected lubricant.

2.3.11 Lubrication System

Splash-type oil lubrication system shall be provided for hoist, trolley and bridge gear cases; an oil pump shall be used on vertical-mounted gear cases exceeding two reductions. Oil pumps shall be the reversible type capable of maintaining the same oil flow direction and volume while being driven in either direction. Electric motor-driven pumps may be used when input shaft

speed is too low at any operating condition to ensure adequate oil flow. In such applications, pump shall be energized whenever drive mechanism brakes are released.

2.3.12 Electrically Driven Oil Pump Alarm

If an electric-driven lubricating pump is used, an audible alarm and red indicating light shall be provided and shall be energized in the event of pump malfunction.

2.4 ELECTRICAL COMPONENTS

2.4.1 Control Systems

A separate controller shall be provided for each motor; however, a duplex controller shall be used for two motor bridge drives. Overload protection shall be in conformance with the requirements of NEMA ICS 2. Contactors that are used for starting, stopping, and reversing shall be mechanically and electrically interlocked.

2.4.1.1 Hoist Control System

Main hoist motion control system shall be single speed, with ac magnetic control of ac squirrel cage motor. Control shall provide for reversing, and for a mechanical load brake.

2.4.1.2 Travel Motion Control System

Bridge and trolley motion control system shall be single speed with ac magnetic control of squirrel cage motors.

2.4.1.3 Drive Control System

The main hoist, trolley and bridge micro-drive control systems shall be ac magnetic, single speed, reversing.

2.4.2 Power Sources

2.4.2.1 System Supply Voltage

Cranes shall be designed to be operated from a 415 volt, three-phase, 50 Hz, alternating current system power source. Energy isolating devices for such machine or equipment shall be designed to accept a lockout device in accordance with NFPA 70.

2.4.2.2 Transformers

Transformers shall be dry type and shall carry full load continuously at rated voltage and frequency without exceeding an average temperature rise of 115 degrees C above an ambient temperature of 40 degrees C. The transformer shall have a totally enclosed case which shall be finished with manufacturer's standard coating system. Transformers shall be fully encapsulated, except for those specifically designed for use as an isolation transformer for static power conversion units.

2.4.2.3 Power Rectifiers

Power rectifiers shall be provided where required to convert ac to dc. Active semiconductor devices shall be silicon type. Rectifiers for motor

control system shall be three-phase full wave rectifiers. Rectifiers for brakes shall be single-phase full-wave or three-phase full-wave rectifiers. A single rectifier may be used in lieu of several smaller rectifiers; brakes shall be supplied from a different rectifier than the other equipment. Protective enclosures shall conform to the requirements of NEMA ICS 6 Type 1. Rectifying elements shall be hermetically-sealed and mounted on heat sinks cooled by natural convection or by mechanical means. Minimum protection for rectifiers shall consist of transient surge suppressors, and 100,000 AIC current-limiting 700V rectifier type fuses in the ac line. Minimum protection for main power rectifiers shall include a line isolation transformer of the type specifically designed for use with static conversion units. Individual diode sets and thyristors shall be protected by fuses on the ac side. Each rectifier bridge used in brake circuits (including overload protection) shall be rated for continuous-duty at a minimum of 150 percent of load rating, and for 1 minute at a minimum of 300 percent of load rating. Each rectifier or SCR bridge used in the dc constant potential control system shall be rated for continuous-duty at a minimum of 100 percent of the load rating, and for one minute at a minimum of 200 percent of load rating following 8 hours at 100 percent load. The dc rated output voltage shall not exceed 460 volts.

2.4.3 Motors

2.4.3.1 General Requirements

Motors shall be designed specifically for crane and hoist duty. Drain holes shall be provided at low points near each end. Inspection and service covers shall be provided with gaskets. Hardware shall be corrosion-resistant. Motors shall conform to the requirements of NFPA 70, NEMA MG 1 and UL 1004. Motor heaters shall be energized when mainline contactor is de-energized, and water heaters shall be de-energized when mainline contactor is de-energized. Motors 15 kW and larger shall be provided with a suitable heater to prevent condensation during long periods of inactivity. One thermal sensitive device embedded in hoist motor windings shall be provided. Device and associated circuitry shall serve as an alarm activating an amber signal or pilot light visible to control stations when motor temperatures become excessive. Set point shall be set below the Class B insulation temperature limit. Thermal-sensitive device and associated circuits shall be self-restoring (automatic reset). Two-speed, two-winding motors with a solid-state control will not be allowed for creep-speed use.

2.4.3.2 Main Motor

Hoist motor shall be dc crane type single-speed; single-winding NEMA design D squirrel cage ac type.

2.4.3.3 Bridge and Trolley Drive Motors

Bridge and trolley drive motors shall be ac crane type single-speed; single-winding NEMA design B squirrel cage ac type rated.

2.4.3.4 Motor Enclosures

Motor enclosures shall be totally enclosed, non-ventilated (TENV).

2.4.3.5 Hoist Motor Insulation and Time Rating

Hoist motors shall be provided with insulation which has a Class H rating

based on an 125 degree C motor temperature rise above 40 degrees C ambient, with frame size selection based on continuous ratings.

2.4.3.6 Bridge and Trolley Motor Insulation and Time Rating

Bridge and trolley drive motors shall be provided with an insulation which has a Class H rating based on 125 degrees C motor temperature rise above 40 degree C ambient with frame size selection based on continuous rating.

2.4.3.7 Micro-Motors

Micro-motors for main hoist bridge and trolley drives shall be industrial type, single-speed; single-winding; ac squirrel cage motor operation and shall conform to the requirements of NEMA MG 1. Micro-motor shall be totally enclosed, fan cooled (TEFC), with Class H insulation. Motor voltage rating shall comply with system supply voltage rating specified.

2.4.4 Control System

A separate controller shall be provided for each motor; a duplex type for 2-motor bridge drives and a quadraplex type for 4-motor bridge drives on ac central cranes. When 2-motor bridge drives are furnished and dc magnetic control is required, dc series-connected motors shall be provided. When 4-motor bridge drives are furnished and dc magnetic control is required, dc series-parallel connected motors shall be provided. Overload protection shall be in conformance with requirements of NEMA ICS 2 and NFPA 70. When contactors are used for starting, stopping and reversing, contactors shall be mechanically and electrically interlocked.

2.4.4.1 Control Panels

Control panels shall be fabricated of solid sheet steel designed and constructed to conform to requirements of NEMA ICS 6 Type 1. Control panel doors shall be hinged, equipped with gaskets and fitted with key-lock handle design, complete with a single key to open all locks.

2.4.4.2 Main and Auxiliary Hoist Control

Hoist motor control system shall provide one speed in each direction with an electrically-operated, full-magnetic, across-the-line reversing type starter. Speed contactors shall be used to prevent the operation of high speeds and low speeds.

2.4.4.3 Bridge and Trolley Control

Bridge and trolley main control systems shall provide one speeds in each direction with an electrically-operated, full-magnetic, across-the-line reversing type starter.

2.4.4.4 Drift Point

Trolley and bridge main control systems shall have a drift point between OFF and first speed control point in each direction or shall have a separate pushbutton.

2.4.4.5 Micro-Drive Motor and Clutch Control

Micro-drive system shall be designed such that when micro-drive is selected at control station, all main motors shall be disconnected, and all

micro-drive clutches shall be energized. Operation of micro-drive motors shall be from crane control station. Micro-motor control systems shall provide single-speed in each direction by means of an electrically-operated, full-magnetic, full voltage type starter. Power shall not be applied to any micro-motor unless all clutches are fully engaged. If a clutch disengages during operation of micro-motors, the mainline contactors shall open and all brakes shall set. Application of power to any main motor shall be prevented with any clutch engaged. A transfer switch shall be provided at crane control station to allow transfer from either mode of operation to the other only when all brakes have been set for not less than 5 seconds. A single CLUTCH-ENGAGED green pilot light shall be provided at the pendant station when all clutches are energized; individual CLUTCH ENGAGED pilot lights shall be provided on drive control panels.

2.4.5 Pendant Control Station

2.4.5.1 General

Pendant control station enclosure shall be NEMA Type 1. Physical size of pendant shall be held to a minimum. A separate cable of corrosion-resistant chain consisting of minimum 6.4 mm wire shall be provided. Pendant station shall be attached to underside of crane bridge and shall hang vertically with bottom of pendant at 1 m above floor. Weight of pendant shall not be supported by control cable.

2.4.5.2 Operating Pushbuttons

Operating pushbuttons shall be heavy-duty, dust-and-oil-tight type with distinctly-felt operating positions which meet requirements of NEMA ICS 2. Pendant control buttons shall be momentary pushbuttons. Pushbuttons (except the POWER-OFF button) shall be the recessed type to avoid accidental operation. Diameter of buttons shall be a size which will make operation possible with a thumb while holding the pendant with same hand. Nameplates shall be provided adjacent to each pushbutton. Barriers shall be provided on pendant between various pushbutton functions, except on elements mounted in junction box. In a multi-speed application, dual-position pushbuttons shall have a definite click-detent position for each speed. Pushbuttons shall be designed and manufactured not to hang up in control case. Pendant shall include a separate set of pushbuttons for each motion and for POWER-ON POWER-OFF. Pushbuttons shall be as follows:

POWER-OFF.
POWER-ON.
Hoist-up.
Hoist-down.

2.4.5.3 Light Indicators

Pilot lights shall meet heavy-duty requirements of NEMA ICS 2. One amber pilot light to indicate excessive hoist motor temperature shall be provided on pendant station. A blue pilot light shall be provided to indicate that the main contactor is energized, and a white pilot light to indicate that power is available on the load side of crane disconnect switch. A bright red mushroom head shall be provided with the POWER-OFF pushbutton. A 2-position selector switch shall be provided to select between normal and micro-drive. A single green pilot light shall be provided to indicate all micro-drive clutches are engaged.

2.4.5.4 Pendant Drive Control

A 3-position momentary contact spring-return to OFF toggle switch shall be provided to control the motorized trolley for pendant.

2.4.6 Protection

2.4.6.1 Main Line Disconnect

A main line disconnect consisting of a combination circuit breaker (50,000 AIC) and non-reversing starter, starter without overloads (mainline contactor) in NEMA Type 1 enclosure shall be provided. Mainline disconnect shall be controlled by a control circuit so that all crane motions will be stopped upon mainline undervoltage, overload, control circuit fuse failure, or operation of POWER OFF pushbutton. Mainline disconnect shall be equipped with energy isolating devices designed to accept lockout devices.

2.4.6.2 Isolation Transformer

The isolation transformer shall be an SCR drive type specifically designed for cranes, with a continuous rating which will exceed that required of the sum of rated full-load full-speed KVA of hoist plus 50 percent of rated full-load full-speed KVA of trolley and bridge motors plus the rated KVA of controls. Total KVA is then multiplied by 1.05 (efficiency factor). The isolation transformer shall be connected to load side of mainline disconnect of the transformer. Crane dc static control electric power distributed on the crane shall be supplied through this isolation transformer.

2.4.6.3 Surge Protection

Surge suppressors shall meet the requirements of UL 1449. Three metal oxide varistors shall be provided on the line side of each SCR drive isolation transformer to provide transient over-voltage protection.

2.4.6.4 Circuit Breakers

Circuit breakers shall meet the requirements of UL 489.

2.4.6.5 Overloads

Alternating current circuit overload relays shall be of the ambient compensated, automatic reset, inverse time type located in all phases individual motor circuits. Overload relays shall be arranged to de-energize the associated motor on an overload condition.

2.4.7 Limit-Switches

Geared limit-switches shall be heavy-duty quick-break double-pole double-throw type conforming to NEMA ICS 2. The geared limit-switch interruption of a motion in one direction shall not prevent the opposite motion. Geared limit-switches shall reset automatically. Limit-switch housings shall be NEMA Type 1. Limit-switches shall interrupt power to the primary and micro-drive control systems.

2.4.7.1 Hoist Upper Limit-Switches

Two limit-switches shall be provided for each hoist. A rotating-type adjustable geared-control circuit interrupt limit-switch shall provide

hoist-up limiting. A secondary hoist-upper-limit shall be provided with a weight-operated power circuit limit-switch to prevent the hoist from raising beyond the safe limit. The secondary limit-switch shall operate to interrupt power to all hoist motor conductors, set the hoist holding brakes and directly open all "raise" power circuits.

2.4.7.2 Hoist Lower Limit-Switches

Hoists shall be provided with a rotating-type adjustable geared-control circuit interrupt limit-switch for hoist-down travel limiting. The hook downward vertical travel of the hook shall be field-adjustable to approximately 150 mm above working surface.

2.4.7.3 Bridge and Trolley Travel Limit-Switches

Runway (track-type) limit-switches shall be provided for crane bridge and trolley motions to stop the bridge and trolley motions, respectively. Limit-switch actuators shall be installed on building and trolley frame to actuate the limit-switches and stop the crane bridge or trolley prior to contacting the trolley frame bumpers. Trip mechanism for trolley motion shall be located on crane runway to trip the switch before the bumper contacts the stop. Trip mechanism for bridge motion shall be located on crane runway to trip switch before bumper contacts the stop. When the switch is tripped, the switch shall permit opposite travel in the direction of stop and then automatically reset.

2.4.7.4 Rail Clamp Limit-Switches

When rail clamps are set, each rail clamp shall be furnished with a limit-switch designed to interrupt the primary and micro-drive control circuits to bridge drive. A red pilot light shall be provided at control station to indicate the rail clamps are set.

2.4.8 Wiring

Wiring shall comply with Article 610 of NFPA 70. Wires shall be numbered or tagged at connection points. Splices shall be made in boxes or panels on terminals boards or standoff insulators. Motor loop, branch circuit and brake conductor selection shall be based on NFPA 70 for 90 degree C conductor rating on indoor cranes, and for 75 degree C conductor rating on outdoor cranes. Conductors in the vicinity of resistors and conductors connected to resistors shall be Type 5RML.

2.4.9 Electrification

2.4.9.1 Main Power Electrification

Main power electrification system shall provide power to crane starter/disconnect circuit breaker.

2.4.9.2 Crane Runway Conductors

Crane runway conductor system shall be the covered conductor bar system type designed and manufactured to meet UL requirements. Protective covers shall be the rigid or flexible self-closing type designed to cover all live conductors and shall be shaped to prevent accidental contact with conductors. Collectors shall be heavy-duty sliding shoe type compatible with the electrification system. Two tandem designed collector heads shall be provided for each conductor rail to provide redundancy.

2.4.9.3 Bridge Span Conductors

Bridge span conductor system shall be the rigid conductor/collector type located within enclosure. Cable loops shall not drop below the hook high position. Outdoor crane bridge festoon system hardware shall be corrosion resistant.

2.4.9.4 Pendant Festoon System

Pendant festoon system shall consist of a support rail, cables, junction boxes, cable cars and accessories. Cable loops shall not drop below the hook high position. Pendant control car shall be provided with NEMA Type 1 junction box. Pendant festoon shall be towed by trolley . Outdoor crane pendant festoon system hardware shall be corrosion resistant.

2.4.9.5 Pendant Drive System

Pendant festoon system shall be provided with a motor-drive system capable of driving the pendant control car per manufacturer's design. Pendant motor drive shall be controlled from the pendant.

2.4.10 Special Requirements

2.4.10.1 Warning Horn

A solid-state electronic warning horn shall be provided on the crane. Any bridge or trolley motion shall be accompanied by a continuous series of alternating tones. The warning horn shall not sound when the crane is in the micro-drive mode.

2.4.10.2 Electrically-Driven Oil Pump Alarm

Electrically-driven lubricating pump shall be complete with an audible alarm and red light for indication of pump malfunction. Location of alarm shall be the factory standard location.

2.4.11 Load-Limit System

A load-limit visual/audible system shall be provided for the main hoist to inform the operator that the preset load has been exceeded. The load-limit system shall consist of a load-cell, load-sensing electronics, overload indicator lights, overload alarm bell and alarm cut-out switch. Load cell shall be mounted to receive the load from equalizing sheave pin or upper block sheave pin. The alarm setpoint shall be adjustable.

2.4.11.1 Load-Sensing Electronics

Load-sensing electronics shall be NEMA Type 3R enclosures. Alarm setpoint shall be adjustable.

2.4.11.2 Alarm and Indicator Light

An overload alarm light shall be provided to indicate a load greater than the preset maximum. Overload alarm shall be indicated with a red light and clearly labeled "OVERLOAD". A bell shall be provided to indicate when an overload condition exists. Provision shall be made to turn off the bell.

2.4.12 Fungus Resistance

Electrical connections such as terminal connections, circuit connections, components and circuit elements shall be coated with fungus-resistant varnish. Components and elements inherently inert to fungi or hermetically sealed shall not be treated. Elements whose operation will be adversely affected with the application of varnish shall not be treated.

2.5 ELECTROMAGNETIC INTERFERENCE SUPPRESSION

2.5.1 Shielded Cable

Pendant and festooned cables shall be the shielded type of braided tinned-copper. Each cable shielding shall be grounded with a single connection to equipment grounding conductor.

2.5.2 EMI/RFI Shielded Boxes

2.5.2.1 General

Boxes designed to house electronic and electrical control equipment, instruments, metering equipment, etc., in installations where electromagnetic compatibility and/or system security is required shall protect interior components from stray radio frequency (RF) fields and shall contain RF signals produced by interior components.

2.5.2.2 Construction

Electromagnetic Interference/Radio Frequency Interference (EMI/RFI) shielded boxes shall be designed to meet UL 50 Type 12 and Type 13. The shielded boxes shall be constructed of 1.897 mm steel with seams continuously welded and ground smooth, without holes and knockouts. Cover gasket shall be a combination of woven plated steel mesh and oil-resistant gasket which will provide an EMI/RFI seal as well as an oil-tight, dust-tight and water-tight seal between cover and body. Gasket shall be attached to cover with oil-resistant adhesive. Stainless steel cover clamps and screws which are quick and easy to operate shall be provided on three sides of hinged cover for positive clamping.

2.5.2.3 Attenuation

EMI/RFI shielded boxes shall be designed to provide maximum shielding of electric and magnetic components of radiated RF energy. RF filters shall be provided to suppress conducted radio frequency in cables and conductors. Shielded boxes shall provide attenuation greater than 60 db at 14.5 KHz to greater than 100 db at 1 MHz for magnetic fields and greater than 100 db from 14.5 KHz to 430 MHz for electric fields.

2.5.2.4 Finish

EMI/RFI shielded boxes shall be zinc-plated in accordance with ASTM B 633 SC3/Type II to provide corrosion-resistant conductive surfaces for gasket contact area and conduit entries. The finish coat shall match the crane finish.

2.5.3 Drum Grounding

A copper ring/collector assembly shall be provided to ground each drum. Ring shall be electrically-bonded to drum. Collector shall be stationary

and connected to equipment grounding conductor system with a No. 8 AWG copper wire.

PART 3 EXECUTION

3.1 ERECTION

The entire crane erection shall be performed in accordance with manufacturer's instructions under the full-time supervision of the manufacturer's representative. Contractor shall provide a written certificate from crane manufacturer indicating the crane is erected in accordance with manufacturer's recommendations before testing the completed installation.

3.1.1 Shop Assembly

Major crane components shall be shop assembled as completely as possible. Disassembled parts shall be match marked and electrical connections tagged after complete no-load shop testing. Parts and equipment at site shall be protected from weather, damage, abuse and loss of identification. Erection procedures shall ensure that the crane is erected without initial stresses, forced or improvised fits, misalignments, nicks of high-strength structural steel components, stress-raising welds and rough burrs. Damaged painted surfaces shall be cleaned and repainted after crane is erected. All necessary grease and oil of approved quality and grade for the initial servicing and field test shall be provided by the Contractor.

3.1.2 Mechanical Alignment

Motors, couplings, brakes, gear boxes and drive components shall be aligned when reinstalled in accordance with manufacturer's instructions.

3.1.3 Electrical Alignment

Control system shall be aligned in accordance with manufacturer's instructions. A copy of the final alignment data shall be stored in control panel door and shall include but not be limited to timer settings, resistor tap settings, potentiometer settings, test-point voltages, supply voltages, motor voltages, motor currents and test conditions such as ambient temperature, motor load, date performed and person performing the alignment.

3.1.4 Welding

Welders, welding operations and welding procedures shall be qualified or prequalified in accordance with AWS D14.1. Welding shall be performed indoors and the surface of parts to be welded shall be free from rust, scale, paint, grease or other foreign matter. Minimum preheat and interpass temperatures shall conform to the requirements of AWS D14.1. Welding shall be performed in accordance with written procedures which specify the Contractor's standard dimensional tolerances for deviation from camber and sweep. Such tolerances shall not exceed those specified in accordance with AWS D14.1. Allowable stress ranges shall be in accordance with CMAA 70. Welding of girders and beams shall conform with AWS D14.1.

3.1.5 Field Painting

Painting required for surfaces not otherwise specified, and finish painting of items only primed at the facility, shall be as specified in Section 09900

PAINTS AND COATINGS. Bridge crane including bridge, trolley, hoist and all attached items shall be painted in accordance with the manufacturer's standard practice. The complete crane shall be of one color. Bridge rail, supports and bracing shall be painted in accordance with Section 09900 PAINTS AND COATINGS. Items such as surfaces in contact with the rail wheels, wheel tread, hooks, wire rope, surfaces on the electrical collector bars in contact with the collector shoes and nameplates shall not be painted. The requirements of explosion proof cables shall be coordinated with cable manufacturer.

3.2 ACCEPTANCE TESTING

3.2.1 General

Contractor shall provide all personnel necessary to conduct the required testing which shall include but not be limited to crane operators, riggers, rigging gear and test weights. Testing shall be performed in the presence of Contracting Officer or his designated representative. Contractor shall notify Contracting Officer 14 days prior to testing operations. Contractor shall operate all equipment and make all necessary corrections and adjustments prior to the testing operations witnessed by Contracting Officer. A representative of the Contractor responsible for procuring and installing hoist equipment shall be present to direct the field testing. Test loads shall be compact and permit a minimum of 50 percent of vertical lift. Test loads shall be minus 0 percent to plus 5 percent of the required weight, and shall be verified prior to testing. Test weights required shall be per manufacturer's recommendations. Operational testing shall not be performed until after building interior has been painted. Three copies of all test reports shall be furnished to Contracting Officer.

3.2.1.1 Test Sequence

Crane shall be tested in accordance with applicable paragraphs of this procedure in the sequence provided.

3.2.1.2 Test Data

Operating and startup current measurements shall be recorded for coils, hoist, trolley, and bridge motors using the appropriate instrumentation. Speed measurements shall be recorded as required by facility evaluation tests (normally at 100 percent load). Recorded values shall be compared with design specifications or manufacturer's recommended values and the abnormal differences shall be justified in the remarks or appropriate adjustments performed. The high temperatures or abnormal operation of any equipment or machinery shall be noted, investigated and corrected. Hoist, trolley and bridge speeds shall be recorded during each test cycle.

3.2.1.3 Equipment Monitoring

Improper operation or poor condition of safety devices, electrical components, mechanical equipment and structural assemblies shall be monitored during the load test. Defects observed to be critical during the testing period shall be reported immediately to the Contracting Officer and the testing operations shall be suspended until the defects are corrected. During each load test and immediately following each load test, the following inspections shall be made:

a. Inspect for evidence of bending, warping, permanent deformation, cracking or malfunction of structural components.

b. Inspect for evidence of slippage in wire rope sockets and fittings.

c. Check for overheating in brake operation; check for proper stopping. All safety devices including emergency stop switches and POWER-OFF pushbuttons shall be tested and inspected separately to verify proper operation of the brakes. When provided, safety accessories including warning horn, lighting, gauges, warning lights and accuracy of wind indicating device and alarm shall be inspected.

d. Check for abnormal noise or vibration and overheating in machinery drive components.

e. Check wire rope sheaves and drum spooling for proper reeving and operation, freedom of movement, abnormal noise or vibration.

f. Check electrical drive components for proper operation, freedom from chatter, noise, overheating, and lockout/tagout devices for energy isolation.

g. Inspect gears for abnormal wear patterns, damage, or inadequate lubrication.

h. Verify that locations of crane capacity plates are visible from pendant operator's position.

3.2.1.4 Hooks

Hooks shall be measured for hook throat spread before and after load test. A throat dimension base measurement shall be established by installing two tram points and measuring the distance between the tram points to within 0.4 mm . This base dimension shall be recorded. Distance between tram points shall be measured before and after load test. An increase in throat opening by more than 1 percent from base measurement shall be cause for rejection.

3.2.2 No-Load Testing

3.2.2.1 Hoist Operating and Limit Switch Test

Load hook shall be raised and lowered through the full range of normal travel at rated speed and other crane speeds. Load hook shall be stopped below the geared limit-switch upper setting. In slow speed only, proper operation of upper and lower limit-switches for primary and micro-drive motions shall be verified. The test shall be repeated a sufficient number of times (minimum of 3) to demonstrate proper operation. Brake action shall be tested in each direction. Proper time-delay shall be verified between the actuation of dual brakes.

3.2.2.2 Trolley Travel

Trolley shall be operated the full distance of bridge rails exercising all primary drive speed controls in each direction. Brake operation shall be verified in each direction. In slow speed, trolley bumpers shall contact trolley stops located on the bridge girders. In slow speed the proper operation (interrupt power, automatic reset) of the trolley limit-switches at both limits of trolley motion shall be tested.

3.2.2.3 Bridge Travel

Bridgeshall be operated in each direction the full distance of runway exercising all primary drive speed controls. Brake operation shall be verified in each direction. In slow speed the proper operation (interrupt power, automatic reset) of the bridge limit-switches at both limits of bridge motion shall be tested. In slow speed or micro-drive the crane bridge bumpers shall contact the runway rail stops.

3.2.2.4 Hoist Loss of Power No-Load Test

Using the primary drive, hooks shall be raised to a height of approximately 3.5 m or less. While slowly lowering the hook the main power source shall be disconnected, verifying that the hook will not lower and that both brakes will set. Test shall be repeated using micro-drive controls.

3.2.2.5 Travel Loss of Power No-Load Test

With the hook raised to clear obstructions and trolley traveling in slow speed, the main power source shall be disconnected, verifying that the trolley will stop and the brake will set. Test shall be repeated for trolley using micro-drive speed. Test shall be repeated for bridge micro-drive and slow speed primary drive controls.

3.2.3 Load Test

3.2.3.1 Hoist

Unless otherwise indicated, the following tests shall be performed using a test load of 125 percent (plus 5 percent, minus 0 percent) of rated load.

a. Hoist Static Load Test: Holding brakes and hoisting components shall be tested by raising the test load approximately 300 mm and manually releasing one of the holding brakes. Load shall be held for 10 minutes. First holding brake shall be reapplied and second holding brake released. Load shall be held for 10 minutes. Any lowering that may occur indicates a malfunction of brakes or lowering components.

b. Dynamic Load Test: Test load shall be raised and lowered through the full range operating in each speed. Machinery shall be completely stopped at least once in each direction to ensure proper brake operation.

c. Hoist Mechanical Load Brake: With test load raised approximately 1.5 m and with the hoist controller in the neutral position, holding brake shall be released. Mechanical load brake shall be capable of holding the test load. With holding brake in released position, test load shall be lowered (first point) and the controller shall be returned to OFF position as the test load lowers. Mechanical load brake shall prevent the test load from accelerating.

d. Hoist Loss of Power Test: After raising test load to approximately 2.5 m , slowly lowering the test load, the main power source and control pushbutton shall be released verifying that the test load will not lower and that both brakes will set. Test shall be repeated using micro-drive controls.

e. Trolley Dynamic Load Test: While operating the trolley the full distance of bridge rails in each direction with test load on the hook (one cycle), proper functioning of all primary drive and micro-drive speed control points and proper brake action shall be tested.

f. Bridge Dynamic Load Test: With test load on hook, bridge shall be operated for the full length of runway in both directions with trolley at each extreme end of bridge. Proper functioning of all primary drive and micro-drive speed control points and brake action shall be verified. Binding of the bridge end trucks shall indicate malfunction.

3.2.3.2 Trolley and Bridge Loss of Power Test

A test load of 100 to 105 percent of rated load shall be raised clear of any obstructions on operating floor. Starting at a safe distance from walls or other obstructions, a slow speed shall be selected using the trolley and bridge primary drive. While maintaining a safe distance to obstructions, the main power source shall be disconnected and brakes shall be verified to have set and that the equipment stops within the distance recommended by manufacturer.

3.2.4 Overload Tests

After the operational tests, bridge crane system and all functions of bridge crane shall be tested at 125 percent of rated load.

3.2.5 Acceleration and Deceleration Tests

The acceleration and deceleration of bridge and trolley shall be tested with approximately 10 percent of rated load at lowest possible location of hook. Bridge and trolley shall be operated to run up to high speed and then stopped without jarring or swinging the load.

3.2.6 Grounding Test

Hoist shall be tested to determine that the hoist, including hook and pendant, are grounded to building during all phases of hoist operation. The grounding of bridge and trolley shall be tested with approximately 10 percent of rated load on hook. Grounding shall be tested between hoist hook and the structure's grounding system.

3.2.7 Adjustments and Repairs

Adjustments and repairs shall be performed by Contractor under the direction of the Contracting Officer at no additional cost to the Government, until satisfactory conditions are maintained, and contract compliance is affected. After adjustments are made to assure correct functioning of the components, pertinent testing shall be repeated.

3.3 SCHEMATIC DIAGRAMS

Schematic diagrams for equipment shall be stored where indicated on drawings.

3.4 MANUFACTURER'S FIELD SERVICE REPRESENTATIVE

Contractor shall furnish a qualified experienced manufacturer's field

service representative to supervise the crane installation, assist in the performance of the on site testing, and instruct personnel in the operational and maintenance features of the equipment.

3.5 FIELD TRAINING

Contractor shall conduct a training course for the operating staff. Training period shall consist of a total of 40 hours of normal working time and shall start after the system is functionally completed but prior to final acceptance. Course instructions shall cover pertinent points involved in operating, starting, stopping, and servicing the equipment, including all major elements of the Operation and Maintenance Manuals. Course instructions shall demonstrate all routine maintenance operations such as lubrication, general inspection, and system trouble shooting repair. Contracting Officer shall be given at least 2 weeks advance notice of field training.

3.6 SPARE PARTS

One set of manufacturer's recommended spare parts shall be furnished and delivered to the site. The spare parts shall be suitably packaged for long-term protection and storage. The packaging shall be legibly labeled to identify the spare parts. A list of the furnished spare parts shall be included in the Maintenance manual.

3.7 ACCEPTANCE

Final acceptance of crane system will not be given until Contractor has successfully completed all testing operations, corrected all material and equipment defects, made all proper operation adjustments, and removed paint or overspray on wire rope, hook and electrical collector bars.

-- End of Section --

SECTION 15050

BASIC MECHANICAL MATERIALS AND METHODS

PART 1 GENERAL

1.1 REFERENCES

The publications listed below form a part of this specification to the extent referenced. The publications are referred to in the text by the basic designation only.

ASTM INTERNATIONAL (ASTM)

ASTM B 117	(1997) Operating Salt Spray (Fog) Apparatus
ASTM D 2308	(1990) Standard Specification for Polyethylene Jacket for Electrical Insulated Wire and Cable

INSTITUTE OF ELECTRICAL AND ELECTRONICS ENGINEERS (IEEE)

IEEE Std 515	(1990) Recommended Practice for the Testing, Design, Installation, and Maintenance of Electrical, Resistance Heat Tracing for Industrial Applications

1.2 RELATED REQUIREMENTS

This section applies to all specification sections of Division 15, unless specified otherwise in the individual section.

1.3 QUALITY ASSURANCE

1.3.1 Material and Equipment Qualifications

Provide materials and equipment that are standard products of manufacturers regularly engaged in the manufacture of such products, which are of a similar material, design and workmanship. Standard products shall have been in satisfactory commercial or industrial use for 2 years prior to bid opening. The 2-year use shall include applications of equipment and materials under similar circumstances and of similar size. The product shall have been for sale on the commercial market through advertisements, manufacturers' catalogs, or brochures during the 2 year period.

1.3.2 Alternative Qualifications

Products having less than a two-year field service record will be acceptable if a certified record of satisfactory field operation for not less than 6000 hours, exclusive of the manufacturer's factory or laboratory tests, can be shown.

1.3.3 Service Support

The equipment items shall be supported by service organizations. Submit a certified list of qualified permanent service organizations for support of

the equipment which includes their addresses and qualifications. These service organizations shall be reasonably convenient to the equipment installation and able to render satisfactory service to the equipment on a regular and emergency basis during the warranty period of the contract.

1.3.4 Manufacturer's Nameplate

Each item of equipment shall have a nameplate bearing the manufacturer's name, address, model number, and serial number securely affixed in a conspicuous place; the nameplate of the distributing agent will not be acceptable.

1.3.5 Modification of References

In each of the publications referred to herein, consider the advisory provisions to be mandatory, as though the word, "shall" had been substituted for "should" wherever it appears. Interpret references in these publications to the "authority having jurisdiction", or words of similar meaning, to mean the Contracting Officer.

1.3.5.1 Definitions

For the International Code Council (ICC) Codes referenced in the contract documents, advisory provisions shall be considered mandatory, the word "should" shall be interpreted as "shall." Reference to the "code official" shall be interpreted to mean the "Contracting Officer." For Navy owned property, references to the "owner" shall be interpreted to mean the "Contracting Officer." For leased facilities, references to the "owner" shall be interpreted to mean the "lessor." References to the "permit holder" shall be interpreted to mean the "Contractor."

1.3.5.2 Administrative Interpretations

For ICC Codes referenced in the contract documents, the provisions of Chapter 1, "Administrator," do not apply. These administrative requirements are covered by the applicable Federal Acquisition Regulations (FAR) included in this contract and by the authority granted to the Officer in Charge of Construction to administer the construction of this project. References in the ICC Codes to sections of Chapter 1, shall be applied appropriately by the Contracting Officer as authorized by his administrative cognizance and the FAR.

1.4 DELIVERY, STORAGE, AND HANDLING

Handle, store, and protect equipment and materials to prevent damage before and during installation in accordance with the manufacturer's recommendations, and as approved by the Government. Replace damaged or defective items.

1.5 ELECTRICAL REQUIREMENTS

Furnish motors, controllers, disconnects and contactors with their respective pieces of equipment. Motors, controllers, disconnects and contactors shall conform to and have electrical connections provided under Section 16402, "Interior Distribution System." Furnish internal wiring for components of packaged equipment as an integral part of the equipment. Extended voltage range motors will not be permitted. Controllers and contactors shall have a maximum of 220 volt control circuits, and shall have auxiliary contacts for use with the controls furnished. When motors

and equipment furnished are larger than sizes indicated, the cost of additional electrical service and related work shall be included under the section that specified that motor or equipment. Power wiring and conduit for field installed equipment shall be provided under and conform to the requirements of Section 16402, "Interior Distribution System."

1.6 INSTRUCTION TO GOVERNMENT

When specified in other sections, furnish the services of competent instructors to give full instruction to the Government in the adjustment, operation, and maintenance, including pertinent safety requirements, of the specified equipment or system. Instructors shall be thoroughly familiar with all parts of the installation and shall be trained in operating theory as well as practical operation and maintenance work.

Instruction shall be given during the first regular work week after the equipment or system has been accepted and turned over to the Government for regular operation. The number of man-days (8 hours per day) of instruction furnished shall be as specified in the individual section. When more than 4 man-days of instruction are specified, use approximately half of the time for classroom instruction. Use other time for instruction with the equipment or system.

When significant changes or modifications in the equipment or system are made under the terms of the contract, provide additional instruction to acquaint the operating personnel with the changes or modifications.

1.7 ACCESSIBILITY

Install all work so that parts requiring periodic inspection, operation, maintenance, and repair are readily accessible. Install concealed valves, expansion joints, controls, dampers, and equipment requiring access, in locations freely accessible through access doors.

PART 2 PRODUCTS

2.1 ELECTRICAL HEAT TRACING FOR PIPING SYSTEMS

Heat trace systems for pipes, valves, and fittings shall be in accordance with IEEE Std 515 and shall be UL listed. System shall consist of all necessary components, including heaters and controls to prevent freezing.

Self-regulating heaters shall consist of two tinned-copper bus wires embedded in a self-regulating, irradiation cross linked, polymer core that varies its power output to respond to temperature along its length. Heater shall be able to be crossed over itself without overheating. The installation shall be approved before use directly on plastic pipe. Heater shall be covered by a thermoplastic inner jacket bonded to the core, a thermoplastic elastomer outer jacket, and a flouropolymer overjacket for mechanical and chemical protection, in accordance with ASTM D 2308.

Heater shall have a self-regulating factor of at least 90 percent, in order to provide energy conservation and to prevent overheating.

Heater shall operate on line voltages of 220 volts without the use of transformers.

Heater shall be sized according to the following table:

Pipe Size (DN) (Millimeter Diameter)	Minus 23 degrees C
80 or less	16 watts per meter (wpm)
100	16 wpm

System shall be controlled by an ambient sensing thermostat set at 10 degrees C either directly or through an appropriate contactor.

Thermostats shall have a minimum range of -4 to 60 degrees C, with contacts rated at 220 volts, 20 amperes minimum for each heated pipe.

A control panel shall be furnished for each heat tracing system. Voltage monitoring panel to continually monitor the supply voltage for each circuit and alarm on loss of voltage supply. Alarm to operate on ground fault when used with ground fault breakers. Alarm indication by scanning digital display and relay activation. Display to indicate the status and proper functioning of each circuit. Panel to include alarm silence and alarm reset switches. Power to operate panel to be 220/50hz. Relay contacts to be rated for 220 vac.

PART 3 EXECUTION

3.1 PAINTING OF NEW EQUIPMENT

New equipment painting shall be factory applied or shop applied, and shall be as specified herein, and provided under each individual section.

3.1.1 Factory Painting Systems

Manufacturer's standard factory painting systems may be provided subject to certification that the factory painting system applied will withstand 125 hours in a salt-spray fog test, except that equipment located outdoors shall withstand 500 hours in a salt-spray fog test. Salt-spray fog test shall be in accordance with ASTM B 117, and for that test the acceptance criteria shall be as follows: immediately after completion of the test, the paint shall show no signs of blistering, wrinkling, or cracking, and no loss of adhesion; and the specimen shall show no signs of rust creepage beyond 3 mm on either side of the scratch mark.

The film thickness of the factory painting system applied on the equipment shall not be less than the film thickness used on the test specimen. If manufacturer's standard factory painting system is being proposed for use on surfaces subject to temperatures above 50 degrees C, the factory painting system shall be designed for the temperature service.

3.1.2 Shop Painting Systems for Metal Surfaces

Clean, pretreat, prime and paint metal surfaces; except aluminum surfaces need not be painted. Apply coatings to clean dry surfaces. Clean the surfaces to remove dust, dirt, rust, oil and grease by wire brushing and solvent degreasing prior to application of paint, except metal surfaces subject to temperatures in excess of 50 degrees C shall be cleaned to bare metal.

Where more than one coat of paint is specified, apply the second coat after the preceding coat is thoroughly dry. Lightly sand damaged painting and retouch before applying the succeeding coat. Color of finish coat shall be

aluminum or light gray.

a. Temperatures Less Than 50 Degrees C: Immediately after cleaning, the metal surfaces subject to temperatures less than 50 degrees C shall receive one coat of pretreatment primer applied to a minimum dry film thickness of 0.0076 mm, one coat of primer applied to a minimum dry film thickness of 0.0255 mm; and two coats of enamel applied to a minimum dry film thickness of 0.0255 mm per coat.

b. Temperatures Between 50 and 205 Degrees C: Metal surfaces subject to temperatures between 50 and 205 degrees C shall receive two coats of 205 degrees C heat-resisting enamel applied to a total minimum thickness of 0.05 mm.

c. Temperatures Greater Than 205 Degrees C: Metal surfaces subject to temperatures greater than 205 degrees C shall receive two coats of 315 degrees C heat-resisting paint applied to a total minimum dry film thickness of 0.05 mm.

-- End of Section --

SECTION 15080

THERMAL INSULATION FOR MECHANICAL SYSTEMS

PART 1 GENERAL

1.1 REFERENCES

The publications listed below form a part of this specification to the extent referenced. The publications are referred to in the text by basic designation only. At the discretion of the Government, the manufacturer of any material supplied will be required to furnish test reports pertaining to any of the tests necessary to assure compliance with the standard or standards referenced in this specification.

ASTM INTERNATIONAL (ASTM)

ASTM A 167	(2004) Stainless and Heat-Resisting Chromium-Nickel Steel Plate, Sheet, and Strip
ASTM A 580/A 580M	(1998; R 2004) Stainless Steel Wire
ASTM B 209M	(2004) Aluminum and Aluminum-Alloy Sheet and Plate (Metric)
ASTM C 1126	(2004) Faced or Unfaced Rigid Cellular Phenolic Thermal Insulation
ASTM C 1136	(2003a) Flexible, Low Permeance Vapor Retarders for Thermal Insulation
ASTM C 1290	(2004) Flexible Fibrous Glass Blanket Insulation Used to Externally Insulate HVAC Ducts
ASTM C 195	(2000) Mineral Fiber Thermal Insulating Cement
ASTM C 449/C 449M	(2000) Mineral Fiber Hydraulic-Setting Thermal Insulating and Finishing Cement
ASTM C 533	(2004) Calcium Silicate Block and Pipe Thermal Insulation
ASTM C 534	(2003) Preformed Flexible Elastomeric Cellular Thermal Insulation in Sheet and Tubular Form
ASTM C 552	(2003) Cellular Glass Thermal Insulation
ASTM C 553	(2002) Mineral Fiber Blanket Thermal Insulation for Commercial and Industrial Applications

ASTM C 591	(2001) Unfaced Preformed Rigid Cellular Polyisocyanurate Thermal Insulation
ASTM C 610	(1999) Molded Expanded Perlite Block and Pipe Thermal Insulation
ASTM C 612	(2004) Mineral Fiber Block and Board Thermal Insulation
ASTM C 665	(2001e1) Mineral-Fiber Blanket Thermal Insulation for Light Frame Construction and Manufactured Housing
ASTM C 795	(2003) Thermal Insulation for Use in Contact with Austenitic Stainless Steel
ASTM C 920	(2002) Elastomeric Joint Sealants
ASTM C 921	(2003a) Jackets for Thermal Insulation
ASTM D 882	(2002) Tensile Properties of Thin Plastic Sheeting
ASTM E 84	(2004) Surface Burning Characteristics of Building Materials
ASTM E 96	(2000e1) Water Vapor Transmission of Materials
ASTM F 1249	(2001) Standard Test Method for Water Vapor Transmission Rate Through Plastic Film and Sheeting Using a Modulated Infrared Senso

MANUFACTURERS STANDARDIZATION SOCIETY OF THE VALVE AND FITTINGS INDUSTRY (MSS)

MSS SP-69	(2002) Pipe Hangers and Supports - Selection and Application

MIDWEST INSULATION CONTRACTORS ASSOCIATION (MICA)

MICA Insulation Stds	(1999) National Commercial & Industrial Insulation Standards

1.2 SYSTEM DESCRIPTION

Field-applied insulation and accessories on mechanical systems shall be as specified herein; factory-applied insulation is specified under the piping, duct or equipment to be insulated. Field applied insulation materials required for use on Government-furnished items as listed in the SPECIAL CONTRACT REQUIREMENTS shall be furnished and installed by the Contractor.

1.3 GENERAL QUALITY CONTROL

1.3.1 Standard Products

Provide field-applied insulation for heating, ventilating, and cooling (HVAC) air distribution systems and piping systems which are located

within, on, under, and adjacent to buildings; and for plumbing systems. Materials shall be the standard products of manufacturers regularly engaged in the manufacture of such products and shall essentially duplicate items that have been in satisfactory use for at least 2 years prior to bid opening.

1.3.2 Installer's Qualifications

Qualified installers shall have successfully completed three or more similar type jobs within the last 5 years.

1.3.2 Surface Burning Characteristics

Unless otherwise specified, insulation not covered with a jacket shall have a flame spread index no higher than 75 and a smoke developed index no higher than 150. Insulation systems which are located in air plenums, in ceiling spaces, and in attic spaces shall have a flame spread index no higher than 25 and a smoke developed index no higher than 50. Insulation materials located exterior to the building perimeter are not required to be fire-rated. Flame spread, and smoke developed indexes, shall be determined by ASTM E 84. Insulation shall be tested in the same density and installed thickness as the material to be used in the actual construction. Material supplied by a manufacturer with a jacket shall be tested as a composite material. Jackets, facings, and adhesives shall have a flame spread index no higher than 25 and a smoke developed index no higher than 50 when tested in accordance with ASTM E 84.

1.3.3 Identification of Materials

Packages or standard containers of insulation, jacket material, cements, adhesives, and coatings delivered for use, and samples required for approval shall have manufacturer's stamp or label attached giving the name of the manufacturer and brand, and a description of the material.

1.4 SUBMITTALS

Government approval is required for submittals with a "G" designation; submittals not having a "G" designation are for information only. When used, a designation following the "G" designation identifies the office that will review the submittal for the Government. Submit the following in accordance with Section 01330 SUBMITTAL PROCEDURES:

SD-02 Shop Drawings

Thermal Insulation

After approval of materials and prior to applying insulation, a booklet shall be prepared and submitted for approval. The booklet shall containing detail drawings showing the insulation material and insulating system for each pipe, duct, or piece of equipment that must be insulated per this specification. The detail drawings shall show the materials to be installed in accordance with the requirements of this specification for the specific insulation application. The Contractor shall submit all detail drawings required to show the entire insulating system, including detail drawings required to show insulation penetrations, vessel bottom and top heads, legs, and skirt insulation as applicable. Detail drawings shall show cut-away, section views, and details indicating each component of the insulation system and showing provisions for insulating jacketing, and sealing portions of the

equipment. For each type of insulation installation on the drawings, provide a label that identifies each component in the installation (i.e., the duct, insulation, adhesive, vapor retarder, jacketing, tape, mechanical fasteners, etc.) Indicate insulation by type and manufacturer. Three copies of the booklet shall be submitted at the jobsite to the Government. One copy of the approved booklet shall remain with the insulation Contractor's display sample and two copies shall be provided for Government use.

SD-03 Product Data

General Materials

A complete list of materials, including manufacturer's descriptive technical literature, performance data, catalog cuts, and installation instructions. The product number, k-value, thickness and furnished accessories for each mechanical system requiring insulation shall be included. Materials furnished under this section of the specification shall be submitted at one time.

1.5 STORAGE

Materials shall be delivered in the manufacturer's unopened containers. Materials delivered and placed in storage shall be provided with protection from weather, humidity, dirt, dust and other contaminants. The Government may reject insulation material and supplies that become dirty, dusty, wet, or contaminated by some other means.

PART 2 PRODUCTS

2.1 GENERAL MATERIALS

Insulation material shall conform to Table 1. Insulation thickness shall be as listed in Table 2. Insulation thickness as specified in Table 2 shall be 25 mm. Insulation exterior shall be cleanable, grease resistant, non-flaking and non-peeling. Thermal Insulation materials shall be compatible and shall not contribute to corrosion, soften, or otherwise attack surfaces to which applied in either the wet or dry state. Materials to be used on stainless steel surfaces shall meet ASTM C 795 requirements. Materials shall be asbestos free and conform to the following:

2.1.1 Mineral Fiber Insulation Cement

Cement shall be in accordance with ASTM C 195.

2.1.1.1 Lagging Adhesive

Lagging is the material used for thermal insulation, especially around a cylindrical object. This may include the insulation as well as the cloth/material covering the insulation. Lagging adhesives shall be nonflammable and fire-resistant and shall have a flame spread rating no higher than 25 and a smoke developed rating no higher than 50 when tested in accordance with ASTM E 84. Adhesive shall be pigmented white and be suitable for bonding fibrous glass cloth to faced and unfaced fibrous glass insulation board; for bonding cotton brattice cloth to faced and unfaced fibrous glass insulation board; for sealing edges of and bonding fibrous glass tape to joints of fibrous glass board; for bonding lagging cloth to thermal insulation; or for attaching fibrous glass insulation to metal surfaces. Lagging adhesives shall be applied in strict accordance with the

manufacturer's recommendations.

2.1.2 Contact Adhesive

Adhesives may be dispersed in a volatile organic solvent. Adhesives may be any of, but not limited to, the neoprane based, rubber based, or elastomeric type that have a flame spread index no higher than 25 and a smoke developed index no higher than 50 when tested in the dry state in accordance with ASTM E 84. The adhesive shall not adversely affect, initially or in service, the insulation to which it is applied, nor shall it cause any corrosive effect on metal to which it is applied. Any solvent dispersing medium or volatile component of the adhesive shall have no objectionable odor and shall not contain any benzene or carbon tetrachloride. The dried adhesive shall not emit nauseous, irritating, or toxic volatile matters or aerosols when the adhesive is heated to any temperature up to 100 degrees C. The dried adhesive shall be nonflammable and fire resistant. Natural cross-ventilation, local (mechanical) pickup, and/or general area (mechanical) ventilation shall be used to prevent an accumulation of solvent vapors, keeping in mind the ventilation pattern must remove any heavier-than-air solvent vapors from lower levels of the workspaces. Gloves and spectacle-type safety glasses are recommended in accordance with safe installation practices.

2.1.3 Caulking

ASTM C 920, Type S, Grade NS, Class 25, Use A.

2.1.4 Corner Angles

Nominal 0.4060 mm aluminum 25 x 25 mm with factory applied kraft backing. Aluminum shall be ASTM B 209M , Alloy 3003, 3105, or 5005.

2.1.5 Finishing Cement

ASTM C 449/C 449M: Mineral fiber hydraulic-setting thermal insulating and finishing cement. All cements that may come in contact with Austenitic stainless steel must include testing per ASTM C 795.

2.1.6 Insulation Tape

Aluminum foil, Fibrous glass cloth and glass tape shall have flame spread and smoke developed ratings of no greater than 25/50 when measured in accordance with ASTM E 84. Tape shall be 100 mm wide rolls.

2.1.7 Staples

Outward clinching type, ASTM A 167, type 304 or 316 stainless steel or monel. Monel is a nickel rich alloy that has high strength, high ductility, and excellent resistance to corrosion.

2.1.8 Jackets

ASTM C 921, Type I, maximum moisture vapor transmission 0.02 perms, (measured before factory application or installation), minimum puncture resistance 50 Beach units on all surfaces except concealed ductwork, where a minimum puncture resistance of 25 Beach units is acceptable. Minimum tensile strength, 6.1 N/mm width. ASTM C 921, Type II minimum puncture resistance 25 Beach units, tensile strength minimum 3.5 N/mm width. Jackets used on insulation exposed in finished areas shall have white

finish suitable for painting without sizing. Based on the application, insulation materials that require factory applied jackets are mineral fiber, cellular glass, and phenolic foam. All non-metallic jackets shall have a maximum flame spread index of 25 and a maximum smoke developed index of 50 when tested in accordance with ASTM E 84.

2.1.8.1 White Vapor Retarder All Service Jacket (ASJ)

For use on hot/cold pipes, ducts, or equipment vapor retarder jackets used on insulation exposed in finished areas shall have white finish suitable for painting without sizing.

2.1.8.2 Aluminum Jackets

Aluminum jackets shall be corrugated, embossed or smooth sheet, 0.4060 mm nominal thickness; ASTM B 209M. Corrugated aluminum jacket shall not be used outdoors. Aluminum jacket securing bands shall be aluminum sheet or Type 304 stainless steel, 0.3960 mm thick, 12.7 mm wide for pipe under 300 mm diameter and 19.1 mm (3/4 inch) wide for pipe over 300 mm and larger diameter. Aluminum jacket circumferential seam bands shall be 50.8 x 0.4060 mm aluminum matching jacket material. The jacket may, at the option of the Contractor, be provided with a factory fabricated Pittsburg or "Z" type longitudinal joint. When the "Z" joint is used, the bands at the circumferential joints shall be designed by the manufacturer to seal the joints and hold the jacket in place.

2.1.8.3 Polyvinyl Chloride (PVC) Jackets

Polyvinyl chloride (PVC) jacket and fitting covers shall have high impact strength, UV resistant rating or treatment and moderate chemical resistance with minimum thickness 0.7620 mm.

2.1.9 Vapor Retarder Required

2.1.9.1 Vapor Retarder Mastic Coatings

The vapor retarder coating shall be fire and water resistant and appropriately selected for either outdoor or indoor service. Color shall be white. The water vapor permeance of the compound shall be determined according to procedure B of ASTM E 96 or ASTM F 1249. The coating shall be a nonflammable, fire resistant type.

2.1.9.2 Laminated Film Vapor Retarder

ASTM C 1136 Type I, maximum moisture vapor transmission 0.02 perms, minimum puncture resistance 50 Beach units on all surfaces except concealed ductwork, where Type II, maximum moisture vapor transmission 0.02 perms, a minimum puncture resistance of 25 Beach units is acceptable. Vapor retarder shall have a maximum flame spread index of 25 and a maximum smoke developed index of 50 when tested in accordance with ASTM E 84.

2.1.9.3 Polyvinylidene Chloride (PVDC) Film Vapor Retarder

The PVDC film vapor retarder shall have a maximum moisture vapor transmission of 0.02 perms, minimum puncture resistance of 150 Beach units, a minimum tensile strength in any direction of 5.3 kN/m when tested per ASTM D 882 and a maximum flame spread/smoke developed index of 25/50 per ASTM E 84.

2.1.9.4 Polyvinylidene Chloride Vapor Retarder Adhesive Tape

Requirements must meet the same as specified for PVDC Film Vapor Retarder in paragraph Laminated Film Vapor Retarder above.

2.1.10 Vapor Retarder Not Required

ASTM C 1136, Type III, maximum moisture vapor transmission 0.10 perms, minimum puncture resistance 50 Beach units on all surfaces except ductwork, where Type IV, maximum moisture vapor transmission 0.10, a minimum puncture resistance of 25 Beach units is acceptable.

2.1.11 Wire

Soft annealed ASTM A 580/A 580M Type 302, 304 or 316 stainless steel, 16 or 18 gauge.

2.1.12 Sealants

Sealants shall be chosen from the butyl polymer type, the styrene-butadiene rubber type, or the butyl or siliconized acrylic type of sealants. Sealants shall have a maximum flame spread/smoke developed index of 25/50 per ASTM E 84.

2.2 PIPE INSULATION MATERIALS

Pipe insulation materials shall be limited to those listed herein and shall meet the following requirements:

2.2.1 Aboveground Cold Pipeline

Insulation for minus 34 degrees to plus 16 degrees C for outdoor, indoor, exposed or concealed applications, shall be as follows:

a. Cellular Glass: ASTM C 552, Type II, and Type III. Supply the insulation with manufacturer's recommended factory-applied jacket.

b. Flexible Elastomeric Cellular Insulation: ASTM C 534, Type I or II. Insulation shall have vapor retarder skin on both sides of the insulation.

c. Phenolic Insulation: ASTM C 1126, Type III. Phenolic insulations shall comply with ASTM C 795 and with the ASTM C 665 paragraph Corrosiveness. Supply the insulation with manufacturer's recommended factory-applied jacket.

d. Polyisocyanurate Insulation: ASTM C 591, type I. Supply the insulation with manufacturer's recommended factory-applied vapor retarder.

e. Mineral Fiber: Supply the insulation with manufacturer's recommended factory-applied jacket. Provide vapor retarder skin on exterior side of jacket.

2.3 Aboveground Hot Pipeline

Insulation for above 16 degrees C , for outdoor, indoor, exposed or concealed applications shall meet the following requirements. Supply the insulation with manufacturer's recommended factory-applied jacket.

a. Mineral Fiber: Supply the insulation with manufacturer's recommended factory-applied jacket. Provide vapor retarder skin on exterior side of jacket.

   Basis of Design: Pipe Sections by Isocam or Kimmco Rigid Pipe Covering.

b. Calcium Silicate: ASTM C 533 Type I indoor only, or outdoors above 121 degrees C pipe temperature. Supply insulation with the manufacturer's recommended factory-applied jacket.

c. Cellular Glass: ASTM C 552, Type II and Type III. Supply the insulation with manufacturer's recommended factory-applied jacket.

d. Flexible Elastomeric Cellular Insulation: ASTM C 534, Type I or II to 93 degrees C service.

e. Phenolic Insulation: ASTM C 1126 Type III to 121 C service shall comply with ASTM C 795. Supply the insulation with manufacturer's recommended factory-applied jacket.

f. Perlite Insulation: ASTM C 610.

g. Polyisocyanurate Insulation: ASTM C 591, Type 1, to 149 degrees C service. Supply the insulation with manufacturer's recommended factory applied jacket.

2.4 DUCT INSULATION MATERIALS

Duct insulation materials shall be limited to those listed herein and shall meet the following requirements:

2.4.1 Rigid Mineral Fiber

ASTM C 612, Class 2 (maximum surface temperature 204 degrees C), 48 kg/m3 3 pcf average, 25 mm thick, Type IA, IB, II, III, and IV, with white paintable, factory-applied for cold air ducts.

2.4.2 Flexible Mineral Fiber

ASTM C 553: Type I,or Type II up to 121 C . ASTM C 1290 Type III with factory applied ASTM C 1136 type I or Type II vapor retarder jacket.

PART 3 EXECUTION

3.1 APPLICATION - GENERAL

Insulation shall only be applied to unheated and uncooled piping and equipment. Flexible elastomeric cellular insulation shall not be compressed at joists, studs, columns, ducts, hangers, etc. The insulation shall not pull apart after a one hour period; any insulation found to pull apart after one hour, shall be replaced.

3.1.1 Installation

Except as otherwise specified, material shall be installed in accordance with the manufacturer's written instructions. Insulation materials shall

not be applied until tests specified in other sections are completed. Material such as rust, scale, dirt and moisture shall be removed from surfaces to receive insulation. Insulation shall be kept clean and dry. Insulation shall not be removed from its shipping containers until the day it is ready to use and shall be returned to like containers or equally protected from dirt and moisture at the end of each workday. Insulation that becomes dirty shall be thoroughly cleaned prior to use. If insulation becomes wet or if cleaning does not restore the surfaces to like new condition, the insulation will be rejected, and shall be immediately removed from the jobsite. Joints shall be staggered on multi layer insulation. Mineral fiber thermal insulating cement shall be mixed with demineralized water when used on stainless steel surfaces. Insulation, jacketing and accessories shall be installed in accordance with MICA Insulation Stds plates except where modified herein or on the drawings.

3.1.2 Firestopping

Where pipes and ducts pass through fire walls, fire partitions, above grade floors, and fire rated chase walls, the penetration shall be sealed with fire stopping materials as specified in Section 07840 FIRESTOPPING.

3.1.3 Installation of Flexible Elastomeric Cellular Insulation

Flexible elastomeric cellular insulation shall be installed with seams and joints sealed with rubberized contact adhesive. Insulation with pre-applied adhesive is not permitted. Flexible elastomeric cellular insulation shall not be used on surfaces greater than 93 degrees C. Seams shall be staggered when applying multiple layers of insulation. Insulation exposed to weather and not shown to have jacketing shall be protected with two coats of UV resistant finish as recommended by the manufacturer after the adhesive is dry. A brush coating of adhesive shall be applied to both butt ends to be joined and to both slit surfaces to be sealed. The adhesive shall be allowed to set until dry to touch but tacky under slight pressure before joining the surfaces. Insulation seals at seams and joints shall not be capable of being pulled apart one hour after application. Insulation that can be pulled apart one hour after installation shall be replaced.

3.1.4 Welding

No welding shall be done on piping, duct or equipment without written approval of the Contracting Officer. The capacitor discharge welding process may be used for securing metal fasteners to duct.

3.1.5 Pipes/Ducts/Equipment which Require Insulation

Insulation is required on all pipes, ducts, or equipment, except for omitted items, as specified.

3.2 PIPE INSULATION INSTALLATION

3.2.1 Pipe Insulation

3.2.1.1 General

Pipe insulation shall be installed on aboveground hot and cold pipeline systems as specified below to form a continuous thermal retarder, including straight runs, fittings and appurtenances unless specified otherwise. Installation shall be with full length units of insulation and using a

single cut piece to complete a run. Cut pieces or scraps abutting each other shall not be used. Pipe insulation shall be omitted on the following:

a. Pipe used solely for fire protection.

b. Chromium plated pipe to plumbing fixtures. However, fixtures for use by the physically handicapped shall have the hot water supply and drain, including the trap, insulated where exposed.

a. Sanitary drain lines.

b. Air chambers.

3.2.1.2 Pipes Passing Through Walls, Roofs, and Floors

a. Pipe insulation shall be continuous through the sleeve.

b. An aluminum jacket with factory applied moisture retarder shall be provided over the insulation wherever penetrations require sealing.

c. Where pipes penetrate interior walls, the aluminum jacket shall extend 50 mm beyond either side of the wall and shall be secured on each end with a band.

d. Where penetrating floors, the aluminum jacket shall extend from a point below the backup material to a point 250 mm above the floor with one band at the floor and one not more than 25 mm from the end of the aluminum jacket.

e. Where penetrating waterproofed floors, the aluminum jacket shall extend from below the backup material to a point 50 mm above the flashing with a band 25 mm from the end of the aluminum jacket.

f. Where penetrating exterior walls, the aluminum jacket required for pipe exposed to weather shall continue through the sleeve to a point 50 mm beyond the interior surface of the wall.

g. Where penetrating roofs, pipe shall be insulated as required for interior service to a point flush with the top of the flashing and sealed with vapor retarder coating. The insulation for exterior application shall butt tightly to the top of flashing and interior insulation. The exterior aluminum jacket shall extend 50 mm down beyond the end of the insulation to form a counter flashing. The flashing and counter flashing shall be sealed underneath with caulking.

h. For domestic cold water pipes supplying lavatories or other similar cooling service that requires insulation, the insulation shall be terminated on the finished side of the wall (i.e., insulation must cover the pipe throughout the wall penetration). The insulation shall be protected with two coats of vapor barrier coating with a minimum total thickness of 2.0 mm . The coating shall extend out onto the insulation 50 mm and shall seal the end of the insulation. The annular space between the outer surface of the pipe insulation and the wall penetration shall be caulked with an approved fire stop material having vapor retarder properties. The pipe and wall penetration shall be covered with a properly sized (well fitting) escutcheon plate. The escutcheon plate shall overlap the wall penetration by at least 10 mm.

3.2.1.3 Pipes Passing Through Hangers

a. Insulation, whether hot or cold application, shall be continuous through hangers. All horizontal pipes 50 mm and smaller shall be supported on hangers with the addition of a Type 40 protection shield to protect the insulation in accordance with MSS SP-69. Whenever insulation shows signs of being compressed, or when the insulation or jacket shows visible signs of distortion at or near the support shield, insulation inserts as specified below for piping larger than 50 mm shall be installed.

b. Horizontal pipes larger than 50 mm at 16 degrees C and above shall be supported on hangers in accordance with MSS SP-69 and Section 15400 PLUMBING, GENERAL PURPOSE.

c. Horizontal pipes larger than 50 mm and below 16 degrees C shall be supported on hangers with the addition of a Type 40 protection shield in accordance with MSS SP-69. An insulation insert of cellular glass, calcium silicate (or perlite above 27 C), or the necessary strength polyisocyanurate shall be installed above each shield. The insert shall cover not less than the bottom 180-degree arc of the pipe. Inserts shall be the same thickness as the insulation, and shall extend 50 mm on each end beyond the protection shield. When insulation inserts are required per the above, and the insulation thickness is less than 25 mm , wooden or cork dowels or blocks may be installed between the pipe and the shield to prevent the weight of the pipe from crushing the insulation, as an option to installing insulation inserts. The insulation jacket shall be continuous over the wooden dowel, wooden block, or insulation insert.

d. Vertical pipes shall be supported with either Type 8 or Type 42 riser clamps with the addition of two Type 40 protection shields in accordance with MSS SP-69 covering the 360-degree arc of the insulation. An insulation insert of cellular glass or calcium silicate shall be installed between each shield and the pipe. The insert shall cover the 360-degree arc of the pipe. Inserts shall be the same thickness as the insulation, and shall extend 50 mm on each end beyond the protection shield. When insulation inserts are required per the above, and the insulation thickness is less than 25 mm , wooden or cork dowels or blocks may be installed between the pipe and the shield to prevent the hanger from crushing the insulation, as an option instead of installing insulation inserts. The insulation jacket shall be continuous over the wooden dowel, wooden block, or insulation insert. The vertical weight of the pipe shall be supported with hangers located in a horizontal section of the pipe. When the pipe riser is longer than 9 m , the weight of the pipe shall be additionally supported with hangers in the vertical run of the pipe that are directly clamped to the pipe, penetrating the pipe insulation. These hangers shall be insulated and the insulation jacket sealed as indicated herein for anchors in a similar service.

e. Inserts shall be covered with a jacket material of the same appearance and quality as the adjoining pipe insulation jacket, shall overlap the adjoining pipe jacket 38 mm, and shall be sealed as required for the pipe jacket. The jacket material used to cover inserts in flexible elastomeric cellular insulation shall

conform to ASTM C 1136, Type 1, and is allowed to be of a different material than the adjoining insulation material.

3.2.1.4 Flexible Elastomeric Cellular Pipe Insulation

Flexible elastomeric cellular pipe insulation shall be tubular form for pipe sizes 150 mm and less. Grade 1, Type II sheet insulation used on pipes larger than 150 mm shall not be stretched around the pipe. On pipes larger than 300 mm, the insulation shall be adhered directly to the pipe on the lower 1/3 of the pipe. Seams shall be staggered when applying multiple layers of insulation. Sweat fittings shall be insulated with miter-cut pieces the same size as on adjacent piping. Screwed fittings shall be insulated with sleeved fitting covers fabricated from miter-cut pieces and shall be overlapped and sealed to the adjacent pipe insulation.

3.2.1.5 Pipes in high abuse areas.

In high abuse areas such as janitor closets and traffic areas in equipment rooms, kitchens, and mechanical rooms, aluminum jackets shall be utilized. Pipe insulation to the 1.8 m level shall be protected.

3.2.2 Aboveground Cold Pipelines

The following cold pipelines shall be insulated per Table I minus 34 degrees C to plus 16 degrees C:

a. Domestic cold water.

b. Make-up water.

c. Horizontal and vertical portions of interior roof drains.

b. Refrigerant suction lines.

c. Air conditioner condensate drains.

i. Exposed lavatory drains and domestic water lines serving plumbing fixtures for handicap persons.

3.2.2.1 Insulation Thickness

Insulation thickness for cold pipelines shall be determined using Table I or as recommended by manufacturer.

Table I - Cold Piping Insulation Thickness
Pipe Size (mm)

Type of Service	Material	Run-outs up to 50 mm*	25 mm & less	30 50 mm	65 - 100 mm	125 - 150 mm	205 mm & larger
Refrigerant suction piping	CG		40	40	40	40	40
	FC		25	25	25	25	25
	PF		40	40	40	40	40
	PC		25	25	25	25	25
Cold domestic water, above and below	CG	40	40	40	40	40	40
	FC	10	10	10	10	10	10
	PF	40	40	40	40	40	40

Table I - Cold Piping Insulation Thickness
Pipe Size (mm)

Type of Service	Material	Run-outs up to 50 mm*	25 mm & less	30 50 mm	65 - 100 mm	125 - 150 mm	205 mm & larger
ceilings, & make up water	PC	25	25	25	25	25	25
	MF	15	25	25	40	40	40
Exposed lavatory drains and domestic water lines serving plumbing fixtures for handicap personnel	FC	15	15	15	15	20	20
	MF	15	25	25	40	40	40
Horizontal & vertical roof drain leaders (including underside of roof drain fitting)	FC		15	15	15	15	15
	PF		40	40	40	40	40
	CG		40	40	40	40	40
	PC		25	25	25	25	25
Air conditioning condensate drain located inside building	FC		10	15	15	N/A	N/A
	PF		40	40	40	N/A	N/A
	PC		25	25	25	N/A	N/A

LEGEND:

PF - Phenolic Foam
CG - Cellular Glass
MF - Mineral Fiber
FC - Flexible Elastomeric Cellular
PC - Polyisocyanurate Foam

3.2.2.2 Jacket for Mineral Fiber, Cellular Glass, Phenolic Foam, and Polyisocyanurate Foam Insulated Pipe

Insulation shall be covered with a factory applied vapor retarder jacket or field applied seal welded PVC jacket. Insulation inside the building, to be protected with an aluminum jacket, shall have the insulation and vapor retarder jacket installed as specified herein. The aluminum jacket shall be installed as specified for piping exposed to weather, except sealing of the laps of the aluminum jacket is not required. In high abuse areas such as janitor closets and traffic areas in equipment rooms, kitchens, and mechanical rooms, aluminum jackets shall be utilized. Pipe insulation to the 1.8 m level shall be protected.

3.2.2.3 Insulation for Straight Runs (Mineral Fiber, Cellular Glass, Phenolic Foam and Polyisocyanurate Foam)

a. Insulation shall be applied to the pipe with joints tightly butted. All butted joints and ends shall be sealed with joint sealant and sealed with a vapor retarder coating or PVDC adhesive tape.

b. Longitudinal laps of the jacket material shall overlap not less than 38 mm. Butt strips 75 mm wide shall be provided for circumferential joints.

c. Laps and butt strips shall be secured with adhesive and stapled on 100 mm centers if not factory self-sealing. If staples are used, they shall be sealed per item "e." below. Note that staples are not required with cellular glass systems.

d. Factory self-sealing lap systems may be used when the ambient temperature is between 4 degrees and 50 degrees C during installation. The lap system shall be installed in accordance with manufacturer's recommendations. Stapler shall be used only if specifically recommended by the manufacturer. Where gaps occur, the section shall be replaced or the gap repaired by applying adhesive under the lap and then stapling.

e. All Staples, including those used to repair factory self-seal lap systems, shall be coated with a vapor retarder coating or PVDC adhesive tape. All seams, except those on factory self-seal systems shall be coated with vapor retarder coating or PVDC adhesive tape.

f. Breaks and punctures in the jacket material shall be patched by wrapping a strip of jacket material around the pipe and securing it with adhesive, stapling, and coating with vapor retarder coating or PVDC adhesive tape. The patch shall extend not less than 38 mm past the break.

g. At penetrations such as thermometers, the voids in the insulation shall be filled and sealed with vapor retarder coating or PVDC adhesive tape.

3.2.2.4 Insulation for Fittings and Accessories

a. Pipe insulation shall be tightly butted to the insulation of the fittings and accessories. The butted joints and ends shall be sealed with joint sealant and sealed with a vapor retarder coating or PVDC adhesive tape.

b. Precut or preformed insulation shall be placed around all fittings and accessories and shall conform to MICA plates except as modified herein: 5 for anchors; 10, 11, and 13 for fittings; 14 for valves; and 17 for flanges and unions. Insulation shall be the same insulation as the pipe insulation, including same density, thickness, and thermal conductivity. Where precut/preformed is unavailable, rigid preformed pipe insulation sections may be segmented into the shape required. Insulation of the same thickness and conductivity as the adjoining pipe insulation shall be used. If nesting size insulation is used, the insulation shall be overlapped 50 mm or one pipe diameter.

Elbows insulated using segments shall conform to MICA Tables 12.20 "Mitered Insulation Elbow'.

c. Upon completion of insulation installation on flanges, unions, valves, anchors, fittings and accessories, terminations, seams, joints and insulation not protected by factory vapor retarder jackets or PVC fitting covers shall be protected with PVDC adhesive tape or two coats of vapor retarder coating with a minimum total thickness of 2.0 mm, applied with glass tape embedded between coats. Tape seams shall overlap 25 mm . The coating shall extend out onto the adjoining pipe insulation 50 mm. Fabricated insulation with a factory vapor retarder jacket shall be protected with PVDC adhesive tape or two coats of vapor retarder coating with a minimum thickness of 2 mm and with a 50 mm wide glass tape embedded between coats. Where fitting insulation butts to pipe insulation, the joints shall be sealed with a vapor retarder coating and a 100 mm wide ASJ tape which matches the jacket of the pipe insulation.

d. Anchors attached directly to the pipe shall be insulated for a sufficient distance to prevent condensation but not less than 150 mm from the insulation surface.

e. Insulation shall be marked showing the location of unions, strainers, and check valves.

3.2.2.5 Optional PVC Fitting Covers

At the option of the Contractor, premolded, one or two piece PVC fitting covers may be used in lieu of the vapor retarder and embedded glass tape. Factory precut or premolded insulation segments shall be used under the fitting covers for elbows. Insulation segments shall be the same insulation as the pipe insulation including same density, thickness, and thermal conductivity. The covers shall be secured by PVC vapor retarder tape, adhesive, seal welding or with tacks made for securing PVC covers. Seams in the cover, and tacks and laps to adjoining pipe insulation jacket, shall be sealed with vapor retarder tape to ensure that the assembly has a continuous vapor seal.

3.2.3 Aboveground Hot Pipelines

The following hot pipelines above 16 degrees C shall be insulated per Table II:

a. Domestic hot water supply & re-circulating system.

b. Water defrost lines in refrigerated rooms.

3.2.3.1 Insulation Thickness

Insulation thickness for hot pipelines shall be determined using Table II.

LEGEND:

PF - Phenolic Foam
CG - Cellular Glass
CS - Calcium Silicate
MF - Mineral Fiber
FC - Flexible Elastomeric Cellular

PL - Perlite
PC - Polyisocyanurate Foam

Table II - Hot Piping Insulation Thickness
Pipe Size (mm)

Type of Service (degrees C)	Material	Run-outs up to 50 mm*	25 mm & less	32 - 50 mm	65 - 100 mm	125 - 150 mm	205 mm & larger
Hot domestic water supply & re-circulating system & Water defrost lines (93C max)**	CG	40	40	40	40	40	40
	FC	15	25	25	40	40	40
	PF	15	25	25	25	25	25
	MF	15	25	25	40	40	40
	PC	25	25	25	25	25	25

* When run-outs to terminal units exceed 3.66 m, the entire length of run-out shall be insulated like the main feed pipe.

** Applied to re-circulating sections of service or domestic hot water systems and first 2.4 meters from storage tank for non-re-circulating systems.

3.2.3.2 Jacket for Insulated Hot Pipe, Except Pipe Insulated with Flexible Elastomeric Cellular

Insulation shall be covered, in accordance with manufacturer's recommendations, with a factory applied Type II jacket or field applied aluminum where required or seal welded PVC.

3.2.3.3 Insulation for Straight Runs

a. Insulation shall be applied to the pipe with joints tightly butted.

b. Longitudinal laps of the jacket material shall overlap not less than 38 mm, and butt strips 75 mm wide shall be provided for circumferential joints.

c. Laps and butt strips shall be secured with adhesive and stapled on 100 mm centers if not factory self-sealing. Adhesive may be omitted where pipe is concealed.

d. Factory self-sealing lap systems may be used when the ambient temperature is between 4 degrees and 49 degrees C and shall be installed in accordance with manufacturer's instructions. Laps and butt strips shall be stapled whenever there is non-adhesion of the system. Where gaps occur, the section shall be replaced or the gap repaired by applying adhesive under the lap and then stapling.

e. Breaks and punctures in the jacket material shall be patched by either wrapping a strip of jacket material around the pipe and securing with adhesive and staple on 100 mm centers (if not factory self-sealing), or patching with tape and sealing with a brush coat of vapor retarder coating. Adhesive may be omitted where pipe is concealed. Patch shall extend not less than 38 mm past the break.

f. Installation of flexible elastomeric cellular pipe insulation shall be by slitting the tubular sections and applying them onto the piping or tubing. Alternately, whenever possible slide un-slit sections over the open ends of piping or tubing. All seams and butt joints shall be secured and sealed with adhesive. When using self seal products only the butt joints shall be secured with adhesive. Insulation shall be pushed on the pipe, never pulled. Stretching of insulation may result in open seams and joints. All edges shall be clean cut. Rough or jagged edges of the insulation shall not be permitted. Proper tools such as sharp knives shall be used. Type II sheet insulation when used on pipe larger than 150 mm shall not be stretched around the pipe. On pipes larger than 300 mm, adhere sheet insulation directly to the pipe on the lower 1/3 of the pipe.

3.2.3.4 Insulation for Fittings and Accessories

a. Pipe insulation shall be tightly butted to the insulation of the fittings and accessories.

b. Precut or preformed insulation shall be placed around all fittings and accessories and shall conform to MICA plates, except as modified herein: 5 for anchors; 10, 11, 12,and 13 for fittings; 14, 15 and 16 for valves; 17 for flanges and unions; and 18 for couplings. Insulation shall be the same as the pipe insulation, including same density, thickness, and thermal conductivity. Where precut/preformed is unavailable, rigid preformed pipe insulation sections may be segmented into the shape required. Insulation of the same thickness and conductivity as the adjoining pipe insulation shall be used. If nesting size insulation is used, the insulation shall be overlapped 50 mm or one pipe diameter. Elbows insulated using segments shall conform to MICA Tables 12.20 "Mitered Insulation Elbow".

c. Upon completion of installation of insulation on flanges, unions, valves, anchors, fittings and accessories, terminations and insulation not protected by factory jackets or PVC fitting covers shall be protected with two coats of adhesive applied with glass tape embedded between coats. Tape seams shall overlap 25 mm. Adhesive shall extend onto the adjoining insulation not less than 50 mm. The total dry film thickness shall be not less than 2.0 mm.

d. Insulation terminations shall be tapered to unions at a 45-degree angle.

e. At the option of the Contractor, factory pre-molded one- or two-piece PVC fitting covers may be used in lieu of the adhesive and embedded glass tape. Factory pre-molded segments or factory or field cut blanket insert insulation segments shall be used under the cover and shall be the same thickness as adjoining pipe insulation. The covers shall be secured by PVC vapor retarder tape, adhesive, seal welding or with tacks made for securing PVC covers.

3.2.4 Piping Exposed to Weather

Piping exposed to weather shall be insulated and jacketed as specified for

the applicable service inside the building. After this procedure, an aluminum jacket or PVC jacket shall be applied. PVC jacketing requires no factory-applied jacket beneath it, however an all service jacket shall be applied if factory applied jacketing is not furnished. Flexible elastomeric cellular insulation exposed to weather shall be treated in accordance with paragraph INSTALLATION OF FLEXIBLE ELASTOMERIC CELLULAR INSULATION.

3.2.4.1 Aluminum Jacket

The jacket for hot piping may be factory applied. The jacket shall overlap not less than 50 mm at longitudinal and circumferential joints and shall be secured with bands at not more than 300 mm centers. Longitudinal joints shall be overlapped down to shed water and located at 4 or 8 o'clock positions. Joints on piping 16 degrees C and below shall be sealed with caulking while overlapping to prevent moisture penetration. Where jacketing on piping 16 degrees C and below abuts an un-insulated surface, joints shall be caulked to prevent moisture penetration. Joints on piping above 16 degrees C shall be sealed with a moisture retarder.

3.2.4.2 Insulation for Fittings

Flanges, unions, valves, fittings, and accessories shall be insulated and finished as specified for the applicable service. Two coats of breather emulsion type weatherproof mastic (impermeable to water, permeable to air) recommended by the insulation manufacturer shall be applied with glass tape embedded between coats. Tape overlaps shall be not less than 25 mm and the adjoining aluminum jacket not less than 50 mm. Factory preformed aluminum jackets may be used in lieu of the above. Molded PVC fitting covers shall be provided when PVC jackets are used for straight runs of pipe. PVC fitting covers shall have adhesive welded joints and shall be weatherproof.

3.2.4.3 PVC Jacket

PVC jacket shall be ultraviolet resistant and adhesive welded weather tight with manufacturer's recommended adhesive. Installation shall include provision for thermal expansion.

3.3 DUCT INSULATION INSTALLATION

Except for oven hood exhaust duct insulation, corner angles shall be installed on external corners of insulation on ductwork in exposed finished spaces before covering with jacket.

3.3.1 Duct Insulation Thickness

Duct insulation thickness shall be in accordance with Table III.

Table III - Minimum Duct Insulation (mm)

Cold Air Ducts	50
Relief Ducts	40
Fresh Air Intake Ducts	40
Warm Air Ducts	50
Exterior Return Ducts	100

Duct insulation thickness may be less be specified above if reduced thickness is appropriate to application and approved by Government.

3.3.2 Insulation and Vapor Retarder for Cold Air Duct

Insulation and vapor retarder shall be provided for the following cold air ducts and associated equipment.

a. Supply ducts.

b. Return ducts.

c. Ducts exposed to weather.

d. Relief ducts.

e. Plenums.

f. Duct-mounted coil casings.

g. Coil headers and return bends.

h. Coil casings.

i. Fresh air intake ducts.

j. Filter boxes.

k. Mixing boxes (field-insulated).

l. Supply fans (field-insulated).

m. Site-erected air conditioner casings.

n. Ducts exposed to weather.

o. Combustion air intake ducts.

Insulation for rectangular ducts shall be flexible type where concealed, minimum density 12 kg per cubic meter and rigid type where exposed, minimum density 48 kg per cubic meter. Insulation for round/oval ducts shall be flexible type, minimum density 12 kg per cubic meter ; or, a semi rigid board, minimum density 48 kg per cubic meter, , formed or fabricated to a tight fit, edges beveled and joints tightly butted and staggered, with a factory applied Type I or II all service jacket. Duct insulation shall be continuous through sleeves and prepared openings except firewall penetrations. Duct insulation terminating at fire dampers, shall be continuous over the damper collar and retaining angle of fire dampers, which are exposed to unconditioned air and which may be prone to condensate formation. Duct insulation and vapor retarder shall cover the collar, neck, and any un-insulated surfaces of diffusers, registers and grills. Vapor retarder materials shall be applied to form a complete unbroken vapor seal over the insulation. Sheet Metal Duct shall be sealed in accordance with Section 15895 AIR SUPPLY, DISTRIBUTION, VENTILATION, AND EXHAUST SYSTEM.

3.3.2.1 Installation on Concealed Duct

a. For rectangular, oval or round ducts, insulation shall be attached by applying adhesive around the entire perimeter of the duct in 150 mm wide strips on 300 mm centers.

b. For rectangular and oval ducts, 600 mm and larger insulation shall be additionally secured to bottom of ducts by the use of mechanical fasteners. Fasteners shall be spaced on 400 mm centers and not more than 400 mm from duct corners.

c. For rectangular, oval and round ducts, mechanical fasteners shall be provided on sides of duct risers for all duct sizes. Fasteners shall be spaced on 400 mm centers and not more than 400 mm from duct corners.

d. Insulation shall be impaled on the mechanical fasteners (self stick pins) where used and shall be pressed thoroughly into the adhesive. Care shall be taken to ensure vapor retarder jacket joints overlap 50 mm. The insulation shall not be compressed to a thickness less than that specified. Insulation shall be carried over standing seams and trapeze-type duct hangers.

e. Self-locking washers shall be installed where mechanical fasteners are used. The pin shall be trimmed back and bent over.

f. Jacket overlaps shall be secured with staples and tape as necessary to ensure a secure seal. Staples, tape and seams shall be coated with a brush coat of vapor retarder coating or PVDC adhesive tape.

g. Breaks in the jacket material shall be covered with patches of the same material as the vapor retarder jacket. The patches shall extend not less than 50 mm beyond the break or penetration in all directions and shall be secured with tape and staples. Staples and tape joints shall be sealed with a brush coat of vapor retarder coating or PVDC adhesive tape.

h. At jacket penetrations such as hangers, thermometers, and damper operating rods, voids in the insulation shall be filled and the penetration sealed with a brush coat of vapor retarder coating or PVDC adhesive tape.

i. Insulation terminations and pin punctures shall be sealed and flashed with a reinforced vapor retarder coating finish or tape with a brush coat of vapor retarder coating.. The coating shall overlap the adjoining insulation and un-insulated surface 50 mm. Pin puncture coatings shall extend 50 mm from the puncture in all directions.

j. Where insulation standoff brackets occur, insulation shall be extended under the bracket and the jacket terminated at the bracket.

3.3.2.2 Installation on Exposed Duct Work

a. For rectangular ducts, rigid insulation shall be secured to the duct by mechanical fasteners on all four sides of the duct, spaced not more than 300 mm apart and not more than 75 mm from the edges of the insulation joints. A minimum of two rows of fasteners shall be provided for each side of duct 300 mm and larger. One row shall be provided for each side of duct less than 300 mm.

b. Duct insulation shall be formed with minimum jacket seams. Each piece of rigid insulation shall be fastened to the duct using mechanical fasteners. When the height of projections is less than the insulation thickness, insulation shall be brought up to standing seams, reinforcing, and other vertical projections and shall not be carried over. Vapor retarder jacket shall be continuous across seams, reinforcing, and projections. When height of projections is greater than the insulation thickness, insulation and jacket shall be carried over.

c. Insulation shall be impaled on the fasteners; self-locking washers shall be installed and the pin trimmed or bent over.

d. Joints in the insulation jacket shall be sealed with a 100 mm wide strip of tape. Tape seams shall be sealed with a brush coat of vapor retarder coating.

e. Breaks and ribs or standing seam penetrations in the jacket material shall be covered with a patch of the same material as the jacket. Patches shall extend not less than 50 mm beyond the break or penetration and shall be secured with tape and stapled. Staples and joints shall be sealed with a brush coat of vapor retarder coating.

f. At jacket penetrations such as hangers, thermometers, and damper operating rods, the voids in the insulation shall be filled and the penetrations sealed with a brush coat of vapor retarder coating.

g. Insulation terminations and pin punctures shall be sealed and flashed with a reinforced vapor retarder coating finish. The coating shall overlap the adjoining insulation and un-insulated surface 50 mm. Pin puncture coatings shall extend 50 mm from the puncture in all directions.

h. Oval and round ducts, flexible type, shall be insulated with factory Type I jacket insulation with minimum density of 12 kg per cubic meter, attached as per MICA standards.

3.3.3 Insulation for Warm Air Duct

Insulation and vapor barrier shall be provided for the following warm air ducts and associated equipment:

a. Supply ducts.

b. Return ducts

c. Ducts exposed to weather

d. Relief air ducts

e. Plenums

f. Duct-mounted coil casings

g. Coil-headers and return bends

h. Coil casings.

i. Fresh air intake ducts

j. Filter boxes

k. Mixing boxes

l. Supply fans

m. Site-erected air conditioner casings

Insulation for rectangular ducts shall be flexible type where concealed, minimum density 12 kg per cubic meter; and rigid type where exposed, minimum density 48 kg per cubic meter. Flexible type insulation shall be used for round ducts, minimum density 12 kg per cubic meter . Adhesive finish where indicated to be used shall be accomplished by applying two coats of adhesive with a layer of glass cloth embedded between the coats. The total dry film thickness shall be approximately 2.0 mm Duct insulation shall be continuous through sleeves and prepared openings. Duct insulation shall terminate at fire dampers and flexible connections.

3.3.3.1 Installation on Concealed Duct

a. For rectangular, oval and round ducts, insulation shall be attached by applying adhesive around the entire perimeter of the duct in 150 mm wide strips on 300 mm centers.

b. For rectangular and oval ducts 600 mm and larger, insulation shall be secured to the bottom of ducts by the use of mechanical fasteners. Fasteners shall be spaced on 450 mm centers and not more than 450 mm from duct corner.

c. For rectangular, oval and round ducts, mechanical fasteners shall be provided on sides of duct risers for all duct sizes. Fasteners shall be spaced on 450 mm centers and not more than 450 mm from duct corners.

d. The insulation shall be impaled on the mechanical fasteners where used. The insulation shall not be compressed to a thickness less than that specified. Insulation shall be carried over standing seams and trapeze-type hangers.

e. Self-locking washers shall be installed where mechanical fasteners are used and the pin trimmed and bent over.

f. Insulation jacket shall overlap not less than 50 mm at joints and the lap shall be secured and stapled on 100 mm centers.

3.3.3.2 Installation on Exposed Duct

a. For rectangular ducts, the rigid insulation shall be secured to the duct by the use of mechanical fasteners on all four sides of the duct, spaced not more than 400 mm apart and not more than 150 mm from the edges of the insulation joints. A minimum of two rows of fasteners shall be provided for each side of duct 300 mm and larger and a minimum of one row for each side of duct less than 300 mm.

b. Duct insulation with factory-applied jacket shall be formed with

minimum jacket seams, and each piece of rigid insulation shall be fastened to the duct using mechanical fasteners. When the height of projection is less than the insulation thickness, insulation shall be brought up to standing seams, reinforcing, and other vertical projections and shall not be carried over the projection. Jacket shall be continuous across seams, reinforcing, and projections. Where the height of projections is greater than the insulation thickness, insulation and jacket shall be carried over the projection.

c. Insulation shall be impaled on the fasteners; self-locking washers shall be installed and pin excess clipped and bent over.

d. Joints on jacketed insulation shall be sealed with a 100 mm wide strip of tape and brushed with vapor retarder coating.

e. Breaks and penetrations in the jacket material shall be covered with a patch of the same material as the jacket. Patches shall extend not less than 50 mm beyond the break or penetration and shall be secured with adhesive and stapled.

f. Insulation terminations and pin punctures shall be sealed with tape and brushed with vapor retarder coating.

g. Oval and round ducts, flexible type, shall be insulated with factory Type I jacket insulation, minimum density of 12 kg per cubic meter attached by staples spaced not more than 400 mm and not more than 150 mm from the degrees of joints. Joints shall be sealed in accordance with item "d." above.

3.3.4 Ducts Handling Air for Dual Purpose

For air handling ducts for dual purpose below and above 16 degrees C, ducts shall be insulated as specified for cold air duct.

3.3.5 Insulation for Evaporative Cooling Duct

Evaporative cooling supply duct located in spaces not evaporatively cooled, shall be insulated. Material and installation requirements shall be as specified for duct insulation for warm air duct.

3.3.6 Duct Test Holes

After duct systems have been tested, adjusted, and balanced, breaks in the insulation and jacket shall be repaired in accordance with the applicable section of this specification for the type of duct insulation to be repaired.

3.3.7 Duct Exposed to Weather

3.3.7.1 Installation

Ducts exposed to weather shall be insulated and finished as specified for the applicable service for exposed duct inside the building. After the above is accomplished, the insulation shall then be further finished as detailed in the following subparagraphs.

3.3.7.2 Round Duct

Aluminum jacket with factory applied moisture retarder shall be applied with the joints lapped not less than 75 mm and secured with bands located at circumferential laps and at not more than 300 mm intervals throughout. Horizontal joints shall lap down to shed water and located at 4 or 8 o'clock position. Joints shall be sealed with caulking to prevent moisture penetration. Where jacketing abuts an un-insulated surface, joints shall be sealed with caulking.

3.3.7.3 Fittings

Fittings and other irregular shapes shall be finished as specified for rectangular ducts.

3.3.7.4 Rectangular Ducts

Two coats of weather barrier mastic reinforced with fabric or mesh for outdoor application shall be applied to the entire surface. Each coat of weatherproof mastic shall be 2.0 mm minimum thickness. The exterior shall be a metal jacketing applied for mechanical abuse and weather protection, and secured with screws.

-- End of Section --

SECTION 15192

FUEL OIL PIPING

PART 1 GENERAL

1.1 REFERENCES

The publications listed below form a part of this specification to the extent referenced. The publications are referred to in the text by the basic designation only. Unless otherwise specified or indicated, electrical and electronics terms used in these specifications and on the Drawings, shall be as defined in DIN, I.E.C., BS or EN standards.

AMERICAN NATIONAL STANDARDS INSTITUTE (ANSI)

ANSI A13.1	(1996; R 2002) Scheme for Identification of Piping Systems
ANSI B16.24	(1991; Errata 1991) Cast Copper Alloy Pipe Flanges and Flanged Fittings Class 150, 300, 400, 600, 900, 1500, and 2500

AMERICAN PETROLEUM INSTITUTE (API)

API 600	(2001) Bolted Bonnet Steel Gate Valves for Petroleum and Natural Gas Industries

ASME INTERNATIONAL (ASME)

ASME B16.3	(1998) Malleable Iron Threaded Fittings
ASME B16.5	(2003) Pipe Flanges and Flanged Fittings
ASME B16.11	(2001) Forged Fittings, Socket-Welding and Threaded
ASME B16.21	(1992) Nonmetallic Flat Gaskets for Pipe Flanges
ASME B16.22	(2002) Wrought Copper and Copper Alloy Solder Joint Pressure Fittings
ASME B16.39	(1998) Malleable Iron Threaded Pipe Unions
ASME B31.1	(2004) Power Piping
ASME B31.3	(2002) Process Piping
ASME B31.4	(2002) Piping Transportation Systems for Liquid Hydrocarbons and Other Liquid
ASME B40.1	(1991) Gauges - Pressure Indicating Dial Type - Elastic Element
ASME BPVC SEC VIII D1	(2001) Boiler and Pressure Vessel Code; Section VIII, Pressure Vessels Division 1

- Basic Coverage

ASME BPVC SEC IX	(2001) Boiler and Pressure Vessel Code; Section IX, Welding and Brazing Qualifications

ASTM INTERNATIONAL (ASTM)

ASTM A 53	(1999b) Pipe, Steel, Black and Hot-Dipped, Zinc-Coated, Welded and Seamless
ASTM A 53/A 53M	(2004a) Pipe, Steel, Black and Hot-Dipped, Zinc-Coated, Welded and Seamless
ASTM B 88M	(2003) Seamless Copper Water Tube (Metric)

AMERICAN WELDING SOCIETY (AWS)

AWS A5.8	(1992) Filler Metals for Brazing and Braze Welding
AWS Z49.1	(1999) Safety in Welding, Cutting and Allied Processes

U.S. GENERAL SERVICES ADMINISTRATION (GSA)

FS A-A-1689	(Rev B) Tape, Pressure-Sensitive Adhesive, (Plastic Film)
FS A-A-50568	(Basic) Gages, Liquid Level Measuring, Tank
FS A-A-58092	(Basic) Tape, Antiseize, Polytetrafluoroethylene
FS A-A-59313	(Basic; Notice 1) Thread, Compound, Antiseize, Zinc Dust-Petrolatum
FS WW-S-2739	(Basic) Strainers, Sediment: Pipeline, Water, Air, Gas, Oil, or Steam
FS GG-M-2802	Meter, Fluid Quantity Volumetric

U.S. DEPARTMENT OF DEFENSE (DOD)

MIL-V-18436	(Rev F) Valves, Check, Bronze, Cast Iron, and Steel Body
MIL-C-19902	(Rev C; Notice 2) Caps, Vent, Fuel Storage Tank
MIL-P-24441	(Rev C; Supp 1) Paint, Epoxy-Polyamide

MANUFACTURERS STANDARDIZATION SOCIETY OF THE VALVE AND FITTINGS INDUSTRY (MSS)

MSS SP-58	(2002) Pipe Hangers and Supports - Materials, Design and Manufacture
MSS SP-69	(2002) Pipe Hangers and Supports -

	Selection and Application
MSS SP-110	(1996) Ball Valves Threaded, Socket-Welding, Solder Joint, Grooved and Flared Ends

NATIONAL FIRE PROTECTION ASSOCIATION (NFPA)

NFPA 30	(2003) Flammable and Combustible Liquids Code
NFPA 31	(2001) Installation of Oil Burning Equipment
NFPA 780	(2000) Installation of Lightning Protection Systems

THE SOCIETY FOR PROTECTIVE COATINGS (SSPC)

SSPC SP 10	(2000) Near-White Blast Cleaning
SSPC Paint 20	(2002) Zinc-Rich Primers, (Type I - "Inorganic" and Type II - "Organic")

UNDERWRITERS LABORATORIES (UL)

UL 142	(2002) Standard for Steel Aboveground Tanks for Flammable and Combustible Liquids Type Standard
UL 842	(1997; Rev Oct 1999) Valves for Flammable Fluids

1.2 DEFINITIONS

1.2.1 Carrier Piping

Piping which contains fuel oil, exclusively.

1.3 MATERIAL AUTHENTICATION DATA INCLUDED IN DESIGN ANALYSIS

Government approval is required for submittals with a "G" designation; submittals not having a "G" designation are for information only. When used, a designation following the "G" designation identifies the office that will review the submittal for the Government. Submit the following in accordance with Section 01330 SUBMITTAL PROCEDURES:

SD-03 Product Data

Pipe and fittings

Valves

Flexible hose

Dielectric unions

Strainers

Meters

Instruments

Pumps

Storage tanks

SD-08 Manufacturer's Instructions

Fiberglass and flexible pipe

SD-10 Operation and Maintenance Data

Pumps

1.4 QUALITY ASSURANCE

1.4.1 Welding Procedure

Before performing welding, submit three copies of welding procedure specification for metals included in the work together with proof of its qualifications as outlined in ASME B.31.1.

1.4.2 Qualification of Welders

Before welder or operator performs welding, submit to the Contracting Officer three copies of the Welder's Performance Qualification Record in conformance with ASME B31.1 showing that the welder was tested under the approved procedure specification submitted by the Contractor.

1.4.3 List of Welder's Names and Symbols

Submit each welder's assigned number, letter, or symbol which shall be used to identify the work of the welder and shall be affixed immediately upon completion of the weld.

1.4.4 Defective Welds

Welders making defective welds after passing a qualification test shall be required to take a re-qualification test. Welders failing the re-qualification tests will not be permitted to work under this contract.

1.4.5 Previous Welder Qualifications

Welding procedures, welders, and welding operators previously qualified by test may be accepted for this contract without re-qualification, subject to approval by the Contracting Officer provided that all the conditions specified in ASME B31.1 are met before a procedure can be used.

1.5 WELDING SAFETY

AWS Z49.1.

PART 2 PRODUCTS

Provide fuel oil system including equipment, materials, installation, workmanship, fabrication, assembly, erection, examination, inspection, and testing shall be in accordance with ASME B31.1, as modified and

supplemented by the contract specifications and drawings.

2.1 MATERIALS AND EQUIPMENT

2.1.1 Steel Pipe and Fittings

2.1.1.1 Pipe

ASTM A 53/A 53M, Type E or S Grade B Schedule 80.

2.1.1.2 Threaded Fittings

ASME B16.11, forged steel, Class 2000.

2.1.1.3 Threaded Fittings

ASME B16.3, black malleable iron, Class 150.

2.1.1.4 Flanges and Flange Fittings

ASME B16.5, steel flanges or convoluted steel flanges which meet the criteria of ASME BPVC SEC VIII D1. Flange faces shall have integral grooves of rectangular cross section which afford containment for self-energizing gasket material.

2.1.2 Copper Piping

2.1.2.1 Pipe and Tubing

ASTM B 88M, Type K or L, hard-drawn.

2.1.2.2 Flanges and Flanged Fittings

ANSI B16.24 Class 150.

2.1.2.3 Solder Joint Fittings

ASME B16.22 wrought copper.

2.1.3 Vent Piping

ASTM A 53 standard weight, zinc-coated steel with zinc-coated malleable iron fittings ASME B16.3.

2.1.4 Valves

2.1.4.1 Bronze Gate Valves

MSS SA 80 Class 125, 50 mm and smaller, wedge disk, nonrising stem.

2.1.4.2 Steel Gate Valves

API 600, oil service, Class 150.

Manufacturer: Velan, Model F14-0064C-02TY

2.1.4.3 Ball Valves

MS SP-72 for flanged or butt-welding ends and MSS SP-110 for threaded,

socket-welding, solder joint, grooved and flared ends.

2.1.4.4 Relief Valves

UL 842 steel or bronze bodies, corrosion-resistant valve seats, and positive closing to prevent leakage.

2.1.4.5 Check Valves

MIL-V-18436, Group A, Type I, Trim 3, Class 150.

2.1.4.6 Plug Valves

Bronze, PTFE seat, non-lubricated full port, square head, UL listed.

2.1.5 Piping Accessories

2.1.5.1 Unions

ASME B16.39 Class 150 pound.

a. Dielectric Unions: Union comprised of steel female pipe thread end and copper solder-joint end conforming to dimensional, strength, and pressure requirements of ASME B16.39, Class 1. Steel parts shall be galvanized or plated. Union shall have a water-impervious insulation barrier capable of limiting galvanic current to one percent of the short-circuit current in a corresponding bimetallic joint. When dry, it shall be able to withstand a 600-volt breakdown test.

2.1.5.2 Welding Filler Metal

ASME B31.4 and compatible with the materials to be welded.

2.1.5.3 Brazing Filler Metal

AWS A5.8 silver base alloy, with melting point not less than 593 degrees C.

2.1.5.4 Hangers, Supports, and Shields

Design, selection, fabrication, installation, and spacing shall conform to MSS SP-58 and MSS SP-69. Hangers, supports, rods, anchors, nuts, bolts, and washers shall be hot-dip galvanized.

2.1.5.5 Strainers

FS WW-S-2739 duplex basket type, with inlet and outlet on the same center line. Cast steel or fabricated steel body, 40 by 40 mesh ASTM 300-series stainless steel baskets. Open area of one basket shall be 2 1/2-times inlet or outlet piping area. Furnish one spare basket.

2.1.5.6 Gaskets

Provide one piece, factory cut, 1.60 mm thick, gaskets resistant to the effects of fuel oil and manufactured of fire-resistant materials. Provide full-face gaskets for flat-face flanged joints, and ring gaskets for raised-face flanged joints. Dimensions for gaskets shall be in accordance with ASME B16.21.

2.1.5.7 Sleeves in Masonry and Concrete Walls, Floors, Roofs

Provide ASTM A 53/A 53M Schedule 40 or Standard Weight, zinc-coated steel pipe sleeves.

2.1.5.8 Sleeves in Other Wall, Floor, and Roof Materials

Provide minimum 26 gage zinc-coated steel sheet sleeves in partitions and other than masonry and concrete walls, floors, and roof.

2.1.5.9 Floor, Walls, and Ceiling Plates

Plates shall be painted cast-iron, malleable iron, or steel.

2.1.5.10 Identification for Piping Aboveground

Labels for pipes 20 mm diameter and larger shall bear printed legends to identify contents of pipes and arrows to show direction of flow. Labels shall have color coded background to signify levels of hazard in accordance with ANSI A13.1. Legends and type and size of characters shall also conform to ANSI A13.1. Make labels of plastic sheet FS A-A-1689 with pressure sensitivity suitable for intended applications, or they may be premolded of plastic to fit over pipe. For pipes smaller than 20 mm diameter, provide brass identification tags 40 mm in diameter with legends in depressed black filled characters.

2.1.6 Meters

FS GG-M-2802 Style A piston or disk, size as indicated, for 15 liter per second maximum flow of Grade No. 2 fuel oil at -14 to 38 degrees C and 207 kPa (gage) maximum pressure. Meter shall be arranged for mounting in pipe line and shall have overrange protection. Casing shall be aluminum. Pressure drop through meter shall not exceed 14 kPa. Provide combination register-totalizer and water escape hole.

2.1.7 Instruments

2.1.7.1 Tank Gages

FS A-A-50568 buoyant force type with direct reading dial.

2.1.7.2 Pressure Gages

ASME B40.1 single style with 115 mm diameter dial for fuel, brass or aluminum case, bronze tube; accuracy within 2 percent of scale range. Provide scale range suitable for the intended service.

2.1.8 Protective Coating Materials for Aboveground Pipe and Tanks

Coatings shall be the products of one manufacturer and coating application procedure shall be in accordance with manufacturer's instruction. Tank surface preparation shall be abrasive blast clean steel surfaces in accordance with SSPC SP 10 to a surface profile of 0.013 to 0.051 mm.

2.1.8.1 External Coatings

Protect aboveground piping and steel tanks against atmospheric corrosion with a coat of organic, lead and chromate free, zinc-rich primer conforming to SSPC Paint 20, Type II applied to a minimum dry film thickness of 0.102

mm and finish with two coats of epoxy-polyamide topcoat conforming to MIL-P-24441. Apply a gray first topcoat conforming to MIL-P-24441/2, Formula 151 applied to a minimum dry film thickness of 0.076 mm and finish with a white second topcoat conforming to MIL-P-24441/3, Formula 152 applied to a minimum dry film thickness of 0.076 mm resulting in a total system minimum dry film thickness of 0.28 mm.

2.2 FUEL OIL AND PUMPING EQUIPMENT

2.2.1 Oil Pumps

Refer to Section 13202 for pumps.

2.3 FUEL OIL STORAGE TANKS AND ACCESSORIES

Construct fuel oil tanks of steel to comply with NFPA 30, NFPA 31 and UL 142.

2.3.1 Fuel Oil Storage and Day Tanks

See Section 13202.

2.3.2 Design, Construction, and Testing of Fuel Oil Tanks

Aboveground steel fuel oil tanks, UL 142, welded construction, UL listed.

2.3.3 Connections to Fuel Oil Tanks

Provide the following connections:

a. Goose-neck vent caps or caps conforming to MIL-C-19902.

b. Fill lines with removable single strainer and locking fill boxes.

c. A sounding connection, to permit entry of the gaging rod, with a locking cap. Provide graduated gaging rod and calibration chart.

d. Pump suction lines with internal vertical pipes extending to within 100 mm of tank bottom.

e. Fuel oil supply, fill and vent piping utilizing swing joint elbows to allow for ample tank movement and pipe expansion.

f. On steel tanks weld a 300 by 300 by 6 mm steel striker plate under gage and fill lines.

g. Nylon dielectric bushings on pipe connections to steel tanks.

h. Ball float valves on vent lines to restrict flow into tank when the tank reaches 90 percent full.

2.4 FUEL OIL PIPING HEAT TRACING

Heat tracing shall be per Section 15050.

PART 3 EXECUTION

3.1 INSTALLATION

Contractor shall provide installation of fuel oil piping system in accordance with applicable Armed Forces, regional or local regulations.

3.1.1 Fuel Oil Piping System

Install piping in out-of-the-way locations, in a manner that will minimize cutting of beams, girders, columns, or load-bearing members. Installation of oil piping and equipment in buildings shall conform to NFPA 30 and NFPA 31, except as indicated or specified herein.

3.1.2 Pipe Sleeves and Plates

Provide sleeves where piping passes through walls, floors, roofs, and partitions. Secure sleeves in proper position and location during construction. Provide sleeves of sufficient length to pass through entire thickness of walls, floors, roofs, and partitions. Provide not less than 6 mm space between exterior of piping or pipe insulation and interior of sleeve. Firmly pack space with insulation and calk at both ends of the sleeve with plastic waterproof cement which will dry to a firm but pliable mass, or provide a segmented elastomeric seal. Secure plates to pipes at sleeves.

3.1.3 Steel Piping

Steel piping 50 mm and smaller shall be threaded. Steel piping 65 mm and larger shall be butt-welded. Flanges may be used for valves and equipment installation.

3.1.4 Threaded Joints in Piping

Provide lubricant or polytetrafluoroethylene tape conforming to FS A-A-58092 on male threads of screwed joints. Red or white lead and zinc compound conforming to FS A-A-59313 may be used. Piping shall be free from fins and burrs. Ream or file out pipe ends to size of bore and remove chips. Attach screwed flanges by screwing the pipe through the flange, and reface pipe and flange accurately.

3.1.5 Copper Tubing

Cut with square ends and remove burrs and fins. Replace tubing cut, dented, or otherwise damaged with new tubing. Clean outside surface of tubing ends and inside recess of fittings to bright metal with wire brush or abrasive, then apply flux to outside surface of tubing ends and on the recess inside of fittings. Insert tubing to the full depth of fitting, then braze. Brazing procedure qualification and preparation and procedures for joints shall be in accordance with ASME B31.3.

3.1.6 Welding

3.1.6.1 Welding of Piping

Welding of joints in piping, butt welds, fillet welds, bends, loops, offsets, and cleaning of pipe shall be in accordance with ASME B31.1. Welds shall be visually examined and meet acceptance standards specified in Chapter VI of ASME B31.1.

3.1.6.2 Quality of Welds

Quality of welds, correction of defects, stress relieving, and preheating shall be in accordance with ASME B31.1.

3.1.6.3 Arc Welding and Gas Welding

In accordance with ASME BPVC SEC IX.

3.1.7 Unions and Flanges

Place unions and flanges where necessary to permit easy disconnection of piping and apparatus. Each connection having a threaded end valve shall have a union.

3.1.8 Valves

Install valves in positions accessible for operation and repair.

3.1.9 Fuel Oil Storage Tanks

Install storage tanks, vents and other connections in accordance with NFPA 30, NFPA 31, recommendations and published instructions of the manufacturer. Provide grounding of tanks directly through ground rods or through bonding to grounded network in accordance with NFPA 780. Fasten aboveground fuel oil tanks on a firm reinforced concrete foundation. Provide fireproofed steel supports between tank and foundation. Materials for sand, gravel, and concrete shall meet requirements specified in Section 03300, "Cast-In-Place Concrete".

3.2 FIELD QUALITY CONTROL

Prior to application of test pressure, remove or valve off piping components which may be damaged by test and install a calibrated test gage in the system. Maintain test pressure for at least one hour. In the event of leakage, locate and repair leak by rewelding and repeat test. Materials and equipment shall be subject to inspection at the installation site by the Contracting Officer.

3.2.1 Piping Test

Before final acceptance of the work, test each system as in service to demonstrate compliance with contract requirements. Furnish electricity, instruments, connecting devices, and personnel for the tests. Correct defects in work provided by the Contractor and repeat tests until work is in compliance with contract requirements. Government will furnish fuel for piping testing and flushing provided by the Contractor. Contractor shall be responsible for test fuel losses greater than 10 percent.

Perform hydrostatic test of fuel oil piping at 1 1/2 times system pressure or 689 kPa (gage) whichever is greater.

3.2.2 Steel Fuel Oil Storage Tanks

Test tanks for leaks by applying internal air pressure and using soapsuds, linseed oil or equivalent material on external welds. For horizontal tanks, test pressure shall be not less than 34 kPa (gage) nor more than 48 kPa (gage). During testing, tank shall be provided with a suitable

pressure relief device.

-- End of Section --

SECTION 15193

GASOLINE/DIESEL DISPENSING SYSTEMS

PART 1 GENERAL

1.1 REFERENCES

Publications listed below form a part of this specification to extent referenced. Publications are referred to within the text by basic designation only.

AMERICAN PETROLEUM INSTITUTE (API)

API Spec 5L	(2004) Line Pipe

ASME INTERNATIONAL (ASME)

ASME B16.11	(2002) Forged Fittings, Socket-Welding and Threaded
ASME B16.15	(1985; R 2004) Cast Bronze Threaded Fittings Classes 125 and 250
ASME B16.21	(1992) Nonmetallic Flat Gaskets for Pipe Flanges

ASTM INTERNATIONAL (ASTM)

ASTM A 53	(1999b) Pipe, Steel, Black and Hot-Dipped, Zinc-Coated, Welded and Seamless

U.S. NATIONAL ARCHIVES AND RECORDS ADMINISTRATION (NARA)

29 CFR 1910.1200	Hazard Communication

U.S. GENERAL SERVICES ADMINISTRATION (GSA)

FS A-A-52557	(Rev A)) Fuel Oil, Diesel; for Posts, Camps and Stations
FS L-C-530	(Rev C) Coating, Pipe, Thermoplastic Resin

U.S. DEPARTMENT OF DEFENSE (DOD)

MIL-G-3056	(Rev F; Int Am 3; Notice 1) Gasoline, Automotive, Combat

MANUFACTURERS STANDARDIZATION SOCIETY OF THE VALVE AND FITTINGS INDUSTRY (MSS)

MSS SP-80	(2003) Bronze Gate, Globe, Angle and Check Valves

NATIONAL FIRE PROTECTION ASSOCIATION (NFPA)

NFPA 30	(2003) Flammable and Combustible Liquids

	Code
NFPA 30A	(2003) Code for Motor Fuel Dispensing Facilities and Repair Garages
NFPA 70	(2005) National Electrical Code

UNDERWRITERS LABORATORIES (UL)

UL 674	(2003) Electric Motors and Generators for Use in Division 1 Hazardous (Classified) Locations
UL 698	(1995; Rev thru Mar 1999) Industrial Control Equipment for Hazardous (Classified) Locations
UL 886	(1994; Rev thru Apr 1999) Outlet Boxes and Fittings for Use in Hazardous (Classified) Locations

1.2 SUBMITTALS

Government approval is required for submittals with a "G" designation; submittals not having a "G" designation are for information only. When used, a designation following the "G" designation identifies the office that will review the submittal for the Government. Submit the following in accordance with Section 01330 SUBMITTAL PROCEDURES:

SD-03 Product Data

Pipe and fittings

Valves

Pumps

Dispensing system

SD-10 Operation and Maintenance Data

Pumps

Dispensing system

1.3 QUALITY ASSURANCE

1.3.1 Standard Products

Material and equipment shall be standard products of a manufacturer regularly engaged in the manufacture of the products. Materials shall be resistant to diesel fuel conforming to requirements of FS A-A-52557; and gasoline conforming to MIL-G-3056. Completed installation shall conform to applicable requirements of NFPA 30 and NFPA 30A.

1.3.2 Safety

Ensure employees are trained in requirements of 29 CFR 1910.1200 and understand information contained in material safety data sheets for their

protection against toxic and hazardous chemical effects.

PART 2 PRODUCTS

2.1 PRODUCT CARRIER PIPE AND FITTINGS

2.1.1 Steel Pipe

Black carbon steel, ASTM A 53, Type E or S, Grade A or B, or API Spec 5L, seamless or electric-weld, Grade A or B, Schedule 40.

2.1.2 Flexible Pipe Fittings

Provide bronze mechanical couplings supplied by pipe manufacturer.

2.1.3 Joint Compound

Joint compound for piping system shall be resistant to water and be suitable for use with fuel containing 40 percent aromatics.

2.1.4 Flange Gaskets

Provide non-asbestos compressed material in accordance with ASME B16.21, 1.60 mm thickness, full face or self-centering flat ring type. Gaskets shall contain aramid fibers bonded with styrene butadiene rubber (SBR) or nitrile butadiene rubber (NBR). NBR binder shall be used for hydrocarbon service.

2.2 DOUBLE-WALL SECONDARY CONTAINMENT PIPING

Provide double-wall containment piping system for buried lines. Exterior containment pipe shall be compatible with transported fluid and sized to contain 110 percent of the total volume of the primary inner pipe and additional equipment required, such as leak detection cables. Steel secondary containment piping shall be factory coated. Coating shall consist of termoplastic resin conforming to FS L-C-530.

2.3 VALVES

Valves shall be Class 150. Gate valves shall be wedge disc type, union bonnet, inside screw, rising stem, and shall have threaded ends within "O-ring" seal. Check valves shall be synthetic disc, swing check type with screwed ends. Valve body shall be bronze. Gate and check valves shall conform to MSS SP-80. Provide UL listed emergency shut-off valve in accordance with NFPA 30 with stainless steel main spring, fusible link, and test port..

2.4 DISPENSING SYSTEM

Dispensing system shall consist of product dispensing units, wiring, cabling, and accessory equipment.

2.4.1 Product Dispensing Units

Provide single sided, remote type, with one hose outlet suitable for single product delivery flow rate of 0.76 liter per second for MOGAS and 1.38 liters per second for diesel. Steel frame shall be capable of resisting normal vertical and lateral loads and secured to concrete with at least two 15 mm anchor bolts. Exterior panels shall be steel with baked enamel

finish. Provide manufacturer's standard unit which has the following functions:

a. Displays: Four-digit volume display to 999.9 liters.

b. Totalizer: Eight-digit (999,999.99) mechanical totalization with identification for each product volume in liters.

c. Accessories: Equip each assembly with accessories such as built-in air eliminators, line check valves, and emergency shut-off valve. Install centering ring or stabilizer bar to ensure proper shearing action for emergency shut-off valve if the dispensing unit is knocked from it's supports.

d. Interlocks: Units shall include nozzle supports interlocked to pump motor control switch to start and stop the pump by nozzle removal and replacement. Provide each unit with interlock switch and valve arrangement that prevents flow of product until meter is reset after dispensing nozzle is returned to holder.

e. Hose: Provide dispensing hose, gasoline and oil resistant, statically grounded, flexible in sub-zero temperatures. Provide a minimum of 3.70 meters of hose.

f. Nozzles: Dispensing nozzles shall be automatic shutoff type, without latch-open device, aluminum body, and full hand insulator to prevent splash-back.

g. Breakaway device: Provide each product hose with UL listed emergency breakaway device designed to retain liquid on both sides of breakaway point. Breakaway device shall have pressure balancing chamber to override line pressure to prevent nuisance breaks caused by a restriction in delivery hose diameter.

h. Pumps:

Provide internal gear-type rotary suction pumps with adjustable bypass valves and suction strainers.

i. Motors: Each motor shall be sized to start and drive equipment at specified capacity and duty cycle without exceeding nameplate rating of motor when operating at proper electrical system voltage. Installation of electrical equipment at dispensers, motors, and pump starter controllers shall be in compliance with Class 1, Group D hazardous location. Motors shall be suitable for 220 volts, 50 Hz power.

2.5 ABOVE GROUND PIPING

Provide ASTM A 53, schedule 40, hot-dip galvanized, threaded end connections; with ASME B16.11 hot-dip galvanized or ASME B16.15 bronze threaded fittings above grade at dispensers.

2.6 PETROLEUM STORAGE TANKS

As indicated on Drawings.

PART 3 EXECUTION

3.1 EARTHWORK

Excavation and backfilling for tanks and piping shall be as specified in Section 02316, "Excavation, Trenching, and Backfilling for Utilities Systems."

3.2 PIPING

Piping system shall be steel. Buried lines which carry product shall have double-walled containment system. Each section of underground pipe shall rest solidly on pipe bed. Piping connections to equipment shall be as required by equipment manufacturer. Make tank connections with two elbow swing joints or flexible connectors to allow for differential settlement. Threaded or mechanical joints shall be allowed at termination points of product carrying lines only. Test plug connections of secondary containment piping may be threaded. Clean pipe interior of foreign matter before lowering into trench and keep clean during installation. Pipe shall not be laid in water or when trench or weather conditions are unsuitable. When work is not in progress, close open ends of pipe and fittings so that water, earth, or other substances cannot enter. Replace pipe, fittings, or appurtenances found defective after installation. Make threaded joints with tapered threads and make tight with joint compound; compatible with intended petroleum products, applied to male threads only. This requirement shall not apply for gauging hatch or similar connections directly over the tank where line terminates in a fitting within a manhole designed to allow for differential settling. Flanges shall not be permitted on buried lines.

3.2.1 Installing Piping

Handle pipe and accessories to ensure sound, undamaged condition. Take care not to damage coating when lowering pipe into trench and when backfilling. Install nonmetallic pipe in accordance with pipe manufacturer's instructions. Lay underground pipelines with a minimum pitch of 25 mm per 15 meters. Horizontal sections shall have a minimum coverage of 457 mm. Piping shall be free of traps and shall drain toward tank. Where steel piping is to be anchored, weld pipe to structural steel member of anchor and patch abraded areas with protective coating or covering as specified. Fit piping passing through concrete or masonry construction with sleeves. Each sleeve shall be of sufficient length to pass through entire thickness of associated structural member and large enough to provide a minimum clear distance of 15 mm between pipe and sleeve, except where otherwise indicated. Sleeves through concrete may be 20-gage metal, fiber, or other approved material. Sleeves shall be located on center with piping and fastened in place. Space between sleeves and pipe shall be calked and filled with bituminous plastic cement or mechanical calking units designed for such use.

3.2.2 Installing Dispenser

Install on raised concrete foundation and protect against collision damage. Provide opening in island for product and electrical risers for each dispenser. Fill island riser holes with clean sand. Install dispensers in accordance with manufacturers' instructions and with emergency shut-off valve breaking point level with pad surface.

3.3 ELECTRICAL WORK

Provide switches and devices required for controlling electrical equipment. Pumps shall be wired and ready for connection to power circuit. Wiring, equipment, and fittings shall be explosion-proof in conformance with applicable requirements of UL 674, UL 698, and UL 886 for Class I, Division 1, Group C and D hazardous locations. Submit proof of such conformance. Electrical installations shall conform to requirements of NFPA 70.

3.4 Pneumatic Test

Test product carrier piping under pneumatic pressure of at least 1 1/4 times designed working pressure of the particular piping system, but not less than 345 kPa (gage). Test secondary piping under pneumatic pressure of 34 kPa (gage). Joints in secondary piping shall not be made until product carrier pipe is successfully pressure tested. Take care not to exceed pressure rating of various fittings such as the dry break vapor line adapter. Maintain pressure in product carrier piping for at least 2 hours during which there shall be no drop in pressure in each line greater than that allowed for thermal expansion and contraction. Maintain pressure in secondary piping for at least one hour. To facilitate this test, various sections of each piping system may be isolated to test each separately. Furnish tapped test adapted fittings that can be attached to each end of the section of line being tested that will permit direct connection to the piping from air compressor. No taps in line will be permitted. Furnish necessary equipment for testing. Gages shall be subject to testing and approval. In event leaks are detected, repair and repeat tests. Upon satisfactory completion of tests, relieve pressure and seal line. Make provisions to prevent displacement of piping during testing. Keep personnel clear of piping during pneumatic testing. Isolate equipment such as pumps, tanks, and meters from piping system during tests.

3.5 FLUSHING AND OPERATIONAL TEST

Do not install dispensing units during flushing and cleaning of piping. Install temporary piping or hose equipped with a strainer having not less than 40-mesh screen between supply pipe and tank fill connection on tank from which fuel is being pumped. Furnish temporary pump for flushing. Flush each dispensing system with same type of fuel intended for use in system until outflowing fuel is "clean" and "bright": clean means absence of sediment or emulsion; bright refers to fluorescent appearance of fuel that has no cloud or haze. Test each system to demonstrate performance requirements for which it was designed. Operate fuel dispensing equipment to demonstrate capability of fuel pumps to deliver desired flow and draw storage tank contents to level of pump inlet. When a portion of each system or a piece of equipment fails to pass tests, make repairs or adjustments and repeat test until satisfactory performance is achieved. Tests shall be witnessed by the Contracting Officer, and the Contractor shall notify the Contracting Officer 10 days before testing. Furnish calibrated instruments and equipment, as well as the fuel, required to clean and flush each system and to conduct tests. Upon completion of tests replace filters.

3.6 SCHEDULE

Some metric measurements in this section are based on mathematical conversion of inch-pound measurement, and not on metric measurement commonly agreed to by the manufacturers or other parties. The inch-pound and metric measurements shown are as follows:

Products	Inch-Pound	Metric
a. MOGAS Dispensing Unit		
Flow Rate	= 12 gpm	= 0.76 liters/sec
Diesel Dispensing Unit		
Flow Rate	= 21 gpm	= 1.38 liters/sec
b. Flange Gaskets		
Thickness	= 1/16 inch	= 1.60 mm
c. Buried Warning and Identification Tape		
Width	= 3 inches	= 80 mm

-- End of Section --

SECTION 15400

PLUMBING, GENERAL PURPOSE

PART 1 GENERAL

1.1 REFERENCES

The publications listed below form a part of this specification to the extent referenced. The publications are referred to within the text by the basic designation only.

AMERICAN NATIONAL STANDARDS INSTITUTE (ANSI)

ANSI Z21.22	(1999) Relief Valves and Automatic Gas Shutoff Devices for Hot Water Supply Systems

ASTM INTERNATIONAL (ASTM)

ASTM A 105/A 105M	(2003) Carbon Steel Forgings for Piping Applications
ASTM A 183	(2003) Carbon Steel Track Bolts and Nuts
ASTM A 193/A 193M	(2004c) Alloy-Steel and Stainless Steel Bolting Materials for High-Temperature Service
ASTM A 515/A 515M	(2003) Pressure Vessel Plates, Carbon Steel, for Intermediate- and Higher-Temperature Service
ASTM A 516/A 516M	(2004) Pressure Vessel Plates, Carbon Steel, for Moderate- and Lower-Temperature Service
ASTM A 53/A 53M	(2004a) Pipe, Steel, Black and Hot-Dipped, Zinc-Coated, Welded and Seamless
ASTM A 733	(2003) Welded and Seamless Carbon Steel and Austenitic Stainless Steel Pipe Nipples
ASTM A 74	(2004a) Cast Iron Soil Pipe and Fittings
ASTM B 32	(2004) Solder Metal
ASTM B 370	(2003) Copper Sheet and Strip for Building Construction
ASTM B 813	(2000e1) Liquid and Paste Fluxes for Soldering of Copper and Copper Alloy Tube
ASTM C 564	(2003a) Rubber Gaskets for Cast Iron Soil Pipe and Fittings

ASTM C 920	(2002) Elastomeric Joint Sealants
ASTM D 1785	(2004a) Poly(Vinyl Chloride)(PVC) Plastic Pipe, Schedules 40, 80, and 120
ASTM D 2000	(2003ae1) Rubber Products in Automotive Applications
ASTM D 2000	(2003ae1) Rubber Products in Automotive Applications
ASTM D 2241	(2004b) Poly(Vinyl Chloride) (PVC) Pressure-Rated Pipe (SDR Series)
ASTM D 2464	(1999e1) Threaded Poly(Vinyl Chloride) (PVC) Plastic Pipe Fittings, Schedule 80
ASTM D 2466	(2002) Poly(Vinyl Chloride)(PVC) Plastic Pipe Fittings, Schedule 40
ASTM D 2467	(2004e1) Poly(Vinyl Chloride) (PVC) Plastic Pipe Fittings, Schedule 80
ASTM D 2564	(2004) Solvent Cements for Poly(Vinyl Chloride) (PVC) Plastic Piping Systems
ASTM D 2665	(2004a) Poly(Vinyl Chloride) (PVC) Plastic Drain, Waste, and Vent Pipe and Fittings
ASTM D 2672	(1996a; R 2003) Joints for IPS PVC Pipe Using Solvent Cement
ASTM D 2846/D 2846M	(1999e1) Chlorinated Poly(Vinyl Chloride) (CPVC) Plastic Hot- and Cold-Water Distribution Systems
ASTM D 2855	(1996; R 2002) Making Solvent-Cemented Joints with Poly(Vinyl Chloride) (PVC) Pipe and Fittings
ASTM D 3138	(2004) Solvent Cements for Transition Joints Between Acrylonitrile-Butadiene-Styrene (ABS) and Poly(Vinyl Chloride) (PVC) Non-Pressure Piping Components
ASTM D 3139	(1998) Joints for Plastic Pressure Pipes Using Flexible Elastomeric Seals
ASTM D 3212	(1996a; R 2003) Joints for Drain and Sewer Plastic Pipes Using Flexible Elastomeric Seals
ASTM F 1760	(2001) Coextruded Poly(Vinyl Chloride) (PVC) Non-Pressure Plastic Pipe Having Reprocessed-Recycled Content
ASTM F 409	(2002) Thermoplastic Accessible and Replaceable Plastic Tube and Tubular

	Fittings
ASTM F 438	(2004) Socket-Type Chlorinated Poly(Vinyl Chloride) (CPVC) Plastic Pipe Fittings, Schedule 40
ASTM F 441/F 441M	(1999e1) Chlorinated Poly(Vinyl Chloride) (CPVC) Plastic Pipe, Schedules 40 and 80
ASTM F 477	(2002e1) Elastomeric Seals (Gaskets) for Joining Plastic Pipe
ASTM F 493	(2004) Solvent Cements for Chlorinated Poly(Vinyl Chloride) (CPVC) Plastic Pipe and Fittings
ASTM F 891	(2004) Coextruded Poly (Vinyl Chloride) (PVC) Plastic Pipe with a Cellular Core

AMERICAN SOCIETY OF SANITARY ENGINEERING (ASSE)

ASSE 1003	(2001) Water Pressure Reducing Valves
ASSE 1005	(1999) Water Heater Drain Valves
ASSE 1018	(2001) Trap Seal Primer Valves, Water Supply Fed
ASSE 1015	(1999) Performance Requirements for Double Check Back Flow Prevention Assemblies 2nd Double check Fire Protection Backflow Prevention Assemblies.

AMERICAN WATER WORKS ASSOCIATION(AWWA)

AWWA B300	(1999) Hypochlorites
AWWA B301	(2004) Liquid Chlorine
AWWA C606	(2004) Grooved and Shouldered Joints
AWWA EWW	(1998) Standard Methods for the Examination of Water and Wastewater
AWWA M20	(1973) Manual: Water Chlorination Principles and Practices

AMERICAN WELDING SOCIETY (AWS)

AWS A5.8	(1992) Filler Metals for Brazing and Braze Welding

ASME INTERNATIONAL (ASME)

ASME A112.14.1	(2003)Backwater Valves
ASME A112.21.2M	(1983) Roof Drains
ASME A112.36.2M	(1991; R 2002) Cleanouts

ASME A112.6.1M	(1997; R 2002) Floor Affixed Supports for Off-the-Floor Plumbing Fixtures for Public Use
ASME B1.20.1	(1983; R 2001) Pipe Threads, General Purpose, Inch
ASME B16.5	(2003) Pipe Flanges and Flanged Fittings
ASME B40.1	(1991; Special Notice 1992) Gauges - Pressure Indicating Dial Type - Elastic Element
ASME CSD-1	(2002) Control and Safety Devices for Automatically Fired Boilers
ASME A112.6.3	(2001) Floor and French Drains
ASME B 16.3	Malleable iron threaded fittings classes 150 and 300
ASME B 16.39	Malleable iron threaded unions classes 150, 250 and 300

CAST IRON SOIL PIPE INSTITUTE (CISPI)

CISPI 310	(2004) Coupling for Use in Connection with Hubless Cast Iron Soil Pipe and Fittings for Sanitary and Storm Drain, Waste, and Vent Piping Applications

DUETSCHES INSTITUTE FUR NORMUNG (DIN)

DIN 8061	Unplasticized polyvinyl chloride pipes - General quality requirements and testing
DIN 8062	(1997; C900a) Polyvinyl Chloride (PVC) Pressure Pipe, 4 In. Through 12 In., for Water Distribution
DIN 8063	Pipe joints components of unplasticized poly ()vinyl chloride) (PVC-U) for pipes under pressure - Part 5: General quality requirements, testing

INDUSTRIAL SAFETY EQUIPMENT ASSOCIATION (ISEA)

ISEA Z358.1	(1998) Emergency Eyewash and Shower Equipment

INTERNATIONAL CODE COUNCIL (ICC)

ICC Intl Plumbing Code	(2000)International Plumbing Code

MANUFACTURERS STANDARDIZATION SOCIETY OF THE VALVE AND FITTINGS INDUSTRY (MSS)

MSS SP-58	(2002) Pipe Hangers and Supports -

	Materials, Design and Manufacture
MSS SP-69	(2002) Pipe Hangers and Supports - Selection and Application
MSS SP-80	(2003) Bronze Gate, Globe, Angle and Check Valves
MSS SP-83	(2001) Class 3000 Steel Pipe Unions Socket-Welding and Threaded

PLUMBING AND DRAINAGE INSTITUTE (PDI)

PDI WH 201	(1992) Water Hammer Arresters

SOCIETY OF AUTOMOTIVE ENGINEERS INTERNATIONAL (SAE)

SAE J1508	(1997) Hose Clamp Specifications

U.S. NATIONAL ARCHIVES AND RECORDS ADMINISTRATION (NARA)

10 CFR 430	Energy Conservation Program for Consumer Products

1.2 MATERIAL AUTHENTICATION DATA INCLUDED IN DESIGN ANALYSIS

Government approval is required for submittals with a "G" designation; submittals not having a "G" designation are for information only. When used, a designation following the "G" designation identifies the office that will review the submittal for the Government. Submit the following in accordance with Section 01330 SUBMITTAL PROCEDURES:

SD-03 Product Data

Plumbing Fixture Schedule

Catalog cuts of specified plumbing fixtures system and related piping system and system location where installed.

Plumbing System

Diagrams, instructions, and other sheets proposed for posting. Manufacturer's recommendations for the installation.

SD-06 Test Reports

Tests, Flushing and Disinfection

Test reports in booklet form showing all field tests performed to adjust each component and all field tests performed to prove compliance with the specified performance criteria, completion and testing of the installed system. Each test report shall indicate the final position of controls.

Test of Backflow Prevention Assemblies.

Certification of proper operation shall be as accomplished in accordance with state regulations by an individual certified by the state to perform such tests. If no state requirement exists,

the Contractor shall have the manufacturer's representative test the device, to ensure the unit is properly installed and performing as intended. The Contractor shall provide written documentation of the tests performed and signed by the individual performing the tests.

SD-10 Operation and Maintenance Data

Plumbing System

Provide copies of the operation manual outlining the step-by-step procedures required for system startup, operation and shutdown. The manual shall include the manufacturer's name, model number, service manual, parts list, and brief description of allequipment and their basic operating features. Provide copies of the maintenance manual listing routine maintenance procedures, possible breakdowns and repairs. The manual shall include piping and equipment layout and simplified wiring and control diagrams of the system as installed.

Operation and Maintenance Manuals shall be as required in Section 01060: SPECIAL CLAUSE entitled OPERATION AND MAINTENANCE (O&M) DATA FOR EQUIPMENT AND SYSTEMS, and include the additional requirements as specified hereinafter. In the event of a conflict, the more detailed requirement shall apply.

1.3 STANDARD PRODUCTS

Specified materials and equipment shall be standard products of a manufacturer regularly engaged in the manufacture of such products. Specified equipment shall essentially duplicate equipment that has performed satisfactorily at least two years prior to bid opening.

1.3.1 Service Support

The equipment items shall be supported by service organizations. Submit a certified list of qualified permanent service organizations for support of the equipment which includes their addresses and qualifications. These service organizations shall be reasonably convenient to the equipment installation and able to render satisfactory service to the equipment on a regular and emergency basis during the warranty period of the contract.

1.3.2 Manufacturer's Nameplate

Each item of equipment shall have a nameplate bearing the manufacturer's name, address, model number, and serial number securely affixed in a conspicuous place; the nameplate of the distributing agent will not be acceptable.

1.4 DELIVERY, STORAGE, AND HANDLING

Handle, store, and protect equipment and materials to prevent damage before and during installation in accordance with the manufacturer's recommendations, and as approved by the Contracting Officer. Replace damaged or defective items.

1.5 ELECTRICAL WORK

Motors, motor controllers and motor efficiencies shall conform to the requirements of Section 16402 INTERIOR DISTRIBUTION SYSTEM. Electrical motor-driven equipment specified herein shall be provided complete with motors. Equipment shall be rated at 50 Hz, single phase, ac unless otherwise indicated. Where a motor controller is not provided in a motor-control center on the electrical drawings, a motor controller shall be as indicated. Motor controllers shall be provided complete with properly sized thermal-overload protection in each ungrounded conductor, auxiliary contact, and other equipment, at the specified capacity, and including an allowable service factor.

1.6 REGULATORY REQUIREMENTS

Plumbing work shall be in accordance with ICC International Plumbing Code.

1.7 PROJECT/SITE CONDITIONS

The Contractor shall become familiar with details of the work, verify dimensions in the field, and advise the Government of any discrepancy before performing any work.

PART 2 PRODUCTS

2.1 MATERIALS

Materials for various services shall be in accordance with TABLES I and II. Pipe schedules shall be selected based on service requirements. Pipe fittings shall be compatible with the applicable pipe materials. Plastic pipe, fittings, and solvent cement used for potable hot and cold water service shall bear the seal or other identification for potable water use. Material or equipment containing lead shall not be used in any potable water system. In line devices such as water meters, building valves, check valves, meter stops, valves, fittings and back flow preventers shall comply with requirements for safe drinking water. End point devices such as drinking water fountains, lavatory faucets, kitchen faucets, ice makers, supply stops and end point control valves used to dispense water for drinking must meet the requirements for drinking water safely and all applicable health code provisions.

Where locally produced materials that meet requirements are available, use these before imported materials.

2.1.1 Pipe Joint Materials

Grooved pipe and hubless cast-iron soil pipe shall not be used under ground. Solder containing lead shall not be used with copper pipe. Joints and gasket materials shall conform to the following:

a. Coupling for Cast-Iron Pipe: for hub and spigot type ASTM A 74, AWWA C606. For hubless type: CISPI 310.

b. Couplings for Grooved Pipe: Ductile Iron, Malleable Iron, or Copper, AWWA C606.

c. Flange Gaskets: Gaskets shall be made of non-asbestos material. Gaskets shall be flat, 1.6 mm (1/16 inch) thick, and contain Aramid fibers bonded with Styrene Butadiene Rubber (SBR) or Nitro

Butadiene Rubber (NBR). Gaskets shall be the full face or self centering flat ring type. Gaskets used for hydrocarbon service shall be bonded with NBR.

d. Neoprene Gaskets for Hub and Cast-Iron Pipe and Fittings: CISPI HSN-85.

e. Brazing Material: Brazing material shall conform to AWS A5.8, BCuP-5.

f. Brazing Flux: Flux shall be in paste or liquid form appropriate for use with brazing material. Flux shall be as follows: lead-free; have a 100 percent flushable residue; contain slightly acidic reagents; contain potassium borides; and contain fluorides.

g. Solder Material: Solder metal shall conform to ASTM B 32.

h. Solder Flux: Flux shall be liquid form, non-corrosive, and conform to ASTM B 813, Standard Test 1.

i. PTFE Tape: PTFE Tape, for use with Threaded Metal or Plastic Pipe.

j. Rubber Gaskets for Cast-Iron Soil-Pipe and Fittings (hub and spigot type and hubless type): ASTM C 564.

k. Rubber Gaskets for Grooved Pipe: ASTM D 2000, maximum temperature 110 degrees C (230 degrees F).

l. Flexible Elastomeric Seals: ASTM D 3139, ASTM D 3212 or ASTM F 477.

m. Bolts and Nuts for Grooved Pipe Couplings: Heat-treated carbon steel, ASTM A 183.

n. Solvent Cement for Transition Joints between ABS and PVC Nonpressure Piping Components: ASTM D 3138.

o. Plastic Solvent Cement for PVC Plastic Pipe: ASTM D 2564 and ASTM D 2855.

p. Plastic Solvent Cement for CPVC Plastic Pipe: ASTM F 493.

q. Flanged fittings including flanges, bolts, nuts, bolt patterns, etc., shall be in accordance with ASME B16.5 class 150 and shall have the manufacturer's trademark affixed in accordance with MSS SP-25. Flange material shall conform to ASTM A 105/A 105M. Blind flange material shall conform to ASTM A 516/A 516M cold service and ASTM A 515/A 515M for hot service. Bolts shall be high strength or intermediate strength with material conforming to ASTM A 193/A 193M.

r. Malleable-iron fittings, galvanized shall be used for diameters up to 2 1/2" or 65 mm shall be conforming to ASME B 16.3 class 150 or ASME B 16.39 or equivalent DIN or EN. .

2.1.2 Miscellaneous Materials

Miscellaneous materials shall conform to the following:

a. Water Hammer Arrester: PDI WH 201.

b. Copper, Sheet and Strip for Building Construction: ASTM B 370.

c. Hose Clamps: SAE J1508.

d. Supports for Off-The-Floor Plumbing Fixtures: ASME A112.6.1M.

e. Metallic Cleanouts: ASME A112.36.2M.

f. Plumbing Fixture Setting Compound: A preformed flexible ring seal molded from hydrocarbon wax material. The seal material shall be nonvolatile nonasphaltic and contain germicide and provide watertight, gastight, odorproof and verminproof properties.

g. Hypochlorites: AWWA B300.

h. Liquid Chlorine: AWWA B301.

i. Gauges - Pressure and Vacuum Indicating Dial Type - Elastic Element: ASME B40.1.

j. Thermometers: Mercury shall not be used in thermometers.

2.1.3 Pipe Insulation Material

Insulation shall be as specified in Section 15080 THERMAL INSULATION FOR MECHANICAL SYSTEMS.

2.2 PIPE HANGERS, INSERTS, AND SUPPORTS

Pipe hangers, inserts, and supports shall conform to MSS SP-58 and MSS SP-69.

2.3 VALVES

Valves shall be provided on supplies to equipment and fixtures. Valves 65 mm (2-1/2 inches) and smaller shall be bronze or brass with threaded bodies for pipe. Valves 80 mm (3 inches) and larger shall have flanged iron bodies and bronze trim. Pressure ratings shall be based upon the application. Valves shall conform to the following standards:

Description	Standard
Backwater Valves	ASME A112.14.1
Vacuum Relief Valves	ANSI Z21.22
Water Pressure Reducing Valves	ASSE 1003
Water Heater Drain Valves	ASSE 1005
Trap Seal Primer Valves	ASSE 1018
Temperature and Pressure Relief Valves for Hot Water Supply Systems	ANSI Z21.22
Temperature and Pressure Relief Valves for Automatically Fired Hot	ASME CSD-1 Safety Code No.,

2.3.1 Backwater Valves

Backwater valves shall be either separate from the floor drain or a combination floor drain, P-trap, and backwater valve, as shown. Valves shall have cast-iron bodies with cleanouts large enough to permit removal of interior parts. Valves shall be of the flap type, hinged or pivoted, with revolving disks. Hinge pivots, disks, and seats shall be nonferrous metal. Disks shall be slightly open in a no-flow no-backwater condition. Cleanouts shall extend to finished floor and be fitted with threaded countersunk plugs.

2.3.2 Wall Faucets/Spigots

Wall faucets with vacuum-breaker backflow preventer shall be brass with 20 mm (3/4 inch) male inlet threads, hexagon shoulder, and 20 mm (3/4 inch) hose connection. Faucet handle shall be securely attached to stem.

2.3.2.1 Room Hose Bibbs and Floor Drains

Room hose bibb and floor drains shall be provided as required. Afghan dining facility kitchen area clean-up hose bib to be supplied with connecting hose on reel including approximately 12 m of hose. Provide clean-up spray nozzle with hose assembly.

2.3.3 Gate Valvess

Gate valves shall be designed for a working pressure of not less than 1.03 MPa (150 psi). Valve connections shall be as required for the piping in which they are installed. Valves shall have a clear waterway equal to the full nominal diameter of the valve, and shall be opened by turning counterclockwise.

a. Valves smaller than 80 mm (3 inches) shall be bronze or brass and shall conform to MSS SP-80, Type 1, Class 150, DIN 3352, BS 21, or ASME B1.20.1.

b. Valves 80 mm (3 inches) and larger shall be iron body, bronze mounted, and shall conform to AWWA C500, DIN 3352, or BS 5163. Flanges shall not be buried. An approved pit shall be provided for all flanged connections.

c. Resilient-Seated Gate Valves: For valves 80 to 300 mm (3 to 12 inches) in size, resilient-seated gate valves shall conform to AWWA C509, DIN 3352 or BS 5163.

2.3.4 Balancing Valves

Balancing valves shall be ball type with the size and locaton as shown on drawings, Valve shall have bronze body, brass ball or as per moanufacturer recommendation. Valve shall have memory stop indicator to permit preset to a fixed open postion to allow valve closing for service without disturbing valve setting.

2.4 Relief Valves

Water heaters and hot water storage tanks shall have a combination pressure and temperature (P&T) relief valve. The pressure relief element of a P&T relief valve shall have adequate capacity to prevent excessive pressure buildup in the system when the system is operating at the maximum rate of heat input. The temperature element of a P&T relief valve shall have a relieving capacity which is at least equal to the total input of the heaters when operating at their maximum capacity. Relief valves shall be rated according to ANSI Z21.22. Relief valves for systems where the maximum rate of heat input is less than 59 kW (200,000 Btuh) shall have 20 mm (3/4 inch) minimum inlets, and 20 mm (3/4 inch) outlets. Relief valves for systems where the maximum rate of heat input is greater than 59 kW (200,000 Btuh) shall have 25 mm (1 inch) minimum inlets, and 25 mm (1 inch) outlets. The discharge pipe from the relief valve shall be the size of the valve outlet.

2.5 Pressure Reducing Valve (PRV)

A. Designed to automatically reduce a higher inlet pressure to maintain a set lower downstream pressure regardless of changing flow rate and varying inlet pressure. Main valve to close drip tight when downstream pressure exceeds set pressure.

2.6 Thermostatic Mixing Valves

Mixing valves, thermostatic type, pressure-balanced or combination thermostatic and pressure-balanced shall be line size and shall be constructed with rough or finish bodies either with or without plating. Each valve shall be constructed to control the mixing of hot and cold water and to deliver water at a desired temperature regardless of pressure or input temperature changes. The control element shall be of an approved type. The body shall be of heavy cast bronze, and interior parts shall be brass, bronze, corrosion-resisting steel or copper. The valve shall be equipped with necessary stops, check valves, unions, and sediment strainers on the inlets. Mixing valves shall maintain water temperature within 2 degrees C of any setting.

2.7 FIXTURES

Fixtures shall be water conservation type. Vitreous china, nonabsorbent, hard-burned, and vitrified throughout the body shall be provided. Porcelain enameled ware shall have specially selected, clear white, acid-resisting enamel coating evenly applied on surfaces. No fixture will be accepted that shows cracks, crazes, blisters, thin spots, or other flaws. Fixtures shall be equipped with appurtenances such as traps, faucets, stop valves, and drain fittings. Each fixture and piece of equipment requiring connections to the drainage system, except grease interceptors, shall be equipped with a trap. Brass expansion or toggle bolts capped with acorn nuts shall be provided for supports, and polished chromium-plated pipe, valves, and fittings shall be provided where exposed to view. Fixtures with the supply discharge below the rim shall be equipped with backflow preventers. Internal parts of flush and/or flushometer valves, shower mixing valves, shower head face plates, pop-up stoppers of lavatory waste drains, and pop-up stoppers and overflow tees and shoes of bathtub waste drains may contain acetal resin, fluorocarbon, nylon, acrylonitrile-butadiene-styrene (ABS) or other plastic material, if the material has provided satisfactory service under actual commercial or industrial operating conditions for not less than 2 years. Plastic in

contact with hot water shall be suitable for 82 degrees C (180 degrees F) water temperature. Plumbing fixtures shall be as indicated in paragraph PLUMBING FIXTURE SCHEDULE.

2.7.1 Lavatories

Enameled cast iron lavatories shall be provided with two integral molded lugs on the back-underside of the fixture and drilled for bolting to the wall in a manner similar to the hanger plate.

2.8 BACKFLOW PREVENTERS

Backflow preventers shall be approved and listed by the Foundation For Cross-Connection Control & Hydraulic Research. Reduced pressure principle assemblies, double check valve assemblies, atmospheric (nonpressure) type vacuum breakers, and pressure type vacuum breakers shall be tested, approved, and listed in accordance with FCCCHR-CCC Manual-9, Section 10. Blackflow preventers with double check valve shall conform to ASSE 1015 Backflow preventers with intermediate atmospheric vent shall conform to ASSE 1012. Reduced pressure principle backflow preventers shall conform to ASSE 1013. Hose connection vacuum breakers shall conform to ASSE 1011. Pipe applied atmospheric type vacuum breakers shall conform to ASSE 1001. Pressure vacuum breaker assembly shall conform to ASSE 1020. Air gaps in plumbing systems shall conform to ASME A112.1.2.

2.9 DRAINS

2.9.1 Floor or Shower Drains (FD-A)

Floor drains shall consist of a galvanized body, integral seepage pan, and adjustable perforated or slotted chromium-plated bronze, nickel-bronze, or nickel-brass strainer, consisting of grate and threaded collar. Floor drains shall be cast iron except where metallic waterproofing membrane is installed. Drains shall be of double drainage pattern for embedding in the floor construction. The seepage pan shall have weep holes or channels for drainage to the drainpipe. The strainer shall be adjustable to floor thickness. A clamping device for attaching flashing or waterproofing membrane to the seepage pan without damaging the flashing or waterproofing membrane shall be provided when required. Drains shall be provided with threaded connection. Between the drain outlet and waste pipe, a neoprene rubber gasket may be installed, provided that the drain is specifically designed for the rubber gasket compression type joint. Floor and shower drains shall conform to ASME A112.21.1M.

2.9.1.1 Drains

Drains and backwater valves installed in connection with waterproofed floors or shower pans shall be equipped with bolted-type device to securely clamp flashing.

2.9.2 Area Drains (AD-1)

Area drains shall be plain pattern with polished stainless steel perforated or slotted grate and bottom outlet. The drain shall be circular or square with a 300 mm (12 inch) nominal overall width or diameter and 250 mm (10 inch) nominal overall depth. Drains shall be cast iron with manufacturer's standard coating. Grate shall be easily lifted out for cleaning. Outlet shall be suitable for inside caulked connection to drain pipe. Drains shall conform to ASME A112.6.3.

2.9.3 Floor Sinks (FS)

Floor sinks shall be square, with 300 mm (12 inch) nominal overall width or diameter and 250 mm (10 inch) nominal overall depth. Floor sink shall have an acid-resistant enamel interior finish with cast-iron body, aluminum sediment bucket, and perforated grate of cast iron in industrial areas and stainless steel in finished areas. The outlet pipe size shall be as indicated or of the same size as the connecting pipe.

2.10 Boiler Room or Trench Drains (FD-B)

Boiler room drains shall have combined drain and trap, hinged grate, removable bucket, and threaded brass cleanout with brass backwater valve. The removable galvanized cast-iron sediment bucket shall have rounded corners to eliminate fouling and shall be equipped with hand grips. Drain shall have a minimum water seal of 100 mm. The grate area shall be not less than 0.065 square meters.

2.11 Pit Drains (PD-1)

Pit drains shall consist of a body, integral seepage pan, and nontilting perforated or slotted grate. Drains shall be of double drainage pattern suitable for embedding in the floor construction. The seepage pan shall have weep holes or channels for drainage to the drain pipe. Membrane or flashing clamping device shall be provided when required. Drains shall be cast iron with manufacturer's standard coating. Drains shall be circular and provided with bottom outlet suitable for inside caulked connection, unless otherwise indicated. Drains shall be provided with separate cast-iron "P" traps, unless otherwise indicated.

2.12 Sight Drains (OSD)

Sight drains shall consist of body, integral seepage pan, and adjustable strainer with perforated or slotted grate and funnel extension. The strainer shall have a threaded collar to permit adjustment to floor thickness. Drains shall be of double drainage pattern suitable for embedding in the floor construction. A clamping device for attaching flashing or waterproofing membrane to the seepage pan without damaging the flashing or membrane shall be provided for other than concrete construction. Drains shall have a galvanized heavy cast-iron body and seepage pan and chromium-plated bronze, nickel-bronze, or nickel-brass strainer and funnel combination. Drains shall be provided with threaded connection and with a separate cast-iron "P" trap, unless otherwise indicated. Drains shall be circular, unless otherwise indicated. The funnel shall be securely mounted over an opening in the center of the strainer. Minimum dimensions shall be as follows:

Area of strainer and collar 0.023 square meters (36 square inches)

Height of funnel 95 mm (3-3/4 inches)
Diameter of lower portion 50 mm (2 inches)
of funnel
Diameter of upper portion 100 mm (4 inches)
of funnel

2.13 Roof Drains and Expansion Joints (RD-1)

Roof drains shall conform to ASME A112.21.2M, with dome and integral flange, and shall have a device for making a watertight connection between roofing and flashing. The whole assembly shall be galvanized heavy pattern cast iron. For aggregate surface roofing, the drain shall be provided with a gravel stop. On roofs other than concrete construction, roof drains shall be complete with underdeck clamp, sump receiver, and an extension for the insulation thickness where applicable. A clamping device for attaching flashing or waterproofing membrane to the seepage pan without damaging the flashing or membrane shall be provided when required to suit the building construction. Strainer openings shall have a combined area equal to twice that of the drain outlet. The outlet shall be equipped to make a proper connection to threaded pipe of the same size as the downspout. An expansion joint of proper size to receive the conductor pipe shall be provided. The expansion joint shall consist of a heavy cast-iron housing, brass or bronze sleeve, brass or bronze fastening bolts and nuts, and gaskets or packing. The sleeve shall have a nominal thickness of not less than 3.416 mm. Gaskets and packing shall be close-cell neoprene, O-ring packing shall be close-cell neoprene of 70 durometer. Packing shall be held in place by a packing gland secured with bolts.

2.14 TRAPS

Unless otherwise specified, traps shall be plastic per ASTM F 409 or copper-alloy adjustable tube type with slip joint inlet and swivel. Traps shall be without a cleanout. Tubes shall be copper alloy with walls not less than 0.813 mm (0.032 inch) thick within commercial tolerances, except on the outside of bends where the thickness may be reduced slightly in manufacture by usual commercial methods. Inlets shall have rubber washer and copper alloy nuts for slip joints above the discharge level. Swivel joints shall be below the discharge level and shall be of metal-to-metal or metal-to-plastic type as required for the application. Nuts shall have flats for wrench grip. Outlets shall have internal pipe thread, except that when required for the application, the outlets shall have sockets for solder-joint connections. The depth of the water seal shall be not less than 50 mm (2 inches). The interior diameter shall be not more than 3.2 mm (1/8 inch) over or under the nominal size, and interior surfaces shall be reasonably smooth throughout. A copper alloy "P" trap assembly consisting of an adjustable "P" trap and threaded trap wall nipple with cast brass wall flange shall be provided for lavatories. The assembly shall be a standard manufactured unit and may have a rubber-gasketed swivel joint.

2.15 GREASE INTERCEPTOR

Grease interceptor of the size indicated shall be of reinforced concrete, or equivalent capacity commercially available steel grease interceptor with removable three section, 9.5 mm (3/8 inch) checker-plate cover(s), and shall be installed outside the building. Steel grease interceptor shall be installed in a concrete pit and shall be acid resistant as recommended by the manufacturer. Concrete shall have 21 MPa minimum compressive strength at 28 days. Provide flow control fitting.

2.16 WATER HEATERS

Water heater types and capacities shall be as indicated on Drawings. Each water heater shall have replaceable anodes. Each primary water heater shall have controls with an adjustable range that includes 32 to 71 degrees

C (90 to 160 degrees F). Each gas-fired water heater and booster water heater shall have controls with an adjustable range that includes 49 to 82 degrees C (120 to 180 degrees F). Hot water systems utilizing recirculation systems shall be tied into building off-hour controls. The thermal efficiencies and standby heat losses shall conform to Table III for each type of water heater specified. The only exception is that storage water heaters and hot water storage tanks having more than 2000 liters storage capacity need not meet the standard loss requirement if the tank surface area is insulated to R-12.5 and if a standing light is not used. Plastic materials polyetherimide (PEI) and polyethersulfone (PES) are forbidden to be used for vent piping of combustion gases.

2.16.1 Automatic Storage Type

Heaters shall be complete with control system, temperature gauge, and pressure gauge, and shall have combination pressure and temperature relief valve. An phenolic coating shall be provided.

2.16.1.1 Electric Type

Electric water heaters types and capacities shall be as indicated on Drawings. Electric water heaters shall be of the cylindrical, pressure type, comprised of inner tank, insulation, outer jacket, immersion type electric heating elements, thermostat, control box, pressure relief valve, water connections and either floor mounting legs or wall brackets suitable for the type and size of heater used.

Inner tank shall be constructed of heavy gauge welded steel with a corrosion-resistant lining, designed for a working pressure of minimum 6 bar. Outer jacket shall be of enamel or epoxy polyester painted heavy gauge steel. Space between the tank and outer jacket shall be filled with insulation of adequate thickness for minimum heat loss. Each water heater shall have replacable magnesium anodes to protect the heater against corrosion. Each water heater shall have temperature controls with an adjustable range that includes 32 to 71 degrees C.

Electric type water heaters shall be equipped with heating elements in quantities required to meet required operating parameters. An enamel coating shall be provided.

2.17 HOT-WATER STORAGE TANKS

Hot-water storage tanks shall be constructed by one manufacturer, ASME stamped for the working pressure, and shall have the National Board (ASME) registration. The tank shall be cement-lined or glass-lined steel type. The heat loss shall conform to TABLE III as determined by the requirements of ASHRAE 90.1. Each tank shall be equipped with a thermometer. Thermometer shall have a separable socket suitable for a 20 mm (3/4 inch) tapped opening. Tanks shall be equipped with a pressure gauge 155 mm (6 inch) minimum diameter face. Insulation shall be as specified in Section 15080 THERMAL INSULATION FOR MECHANICAL SYSTEMS. Storage tank capacity shall be as shown.

2.18 COMPRESSED AIR SYSTEM

2.18.1 Air Compressors

Air compressor unit shall be a factory-packaged assembly, including 380 volt motor controls, switches, wiring, accessories, and motor controllers.

Tank-mounted air compressors shall be manufactured to comply with regulatory requirements. Air compressors shall have manufacturer's name and address, together with trade name, and catalog number on a nameplate securely attached to the equipment. Each compressor shall start and stop automatically at upper and lower pressure limits of the system and have automatic-off switch, a time delay relay shall allow the compressor to operate for an adjustable length of time unloaded, then stop the unit. Guards shall shield exposed moving parts. Air compressor shall be either single or duplex style.Each duplex compressor system shall be provided with alternation system as standard with manufacturer. Each compressor motor shall be provided with an across-the-line-type magnetic controller. An intake air filter and silencer shall be provided with each compressor. Aftercooler and moisture separator shall be installed between compressors and air receiver to remove moisture and oil condensate before the air enters the receiver. Aftercoolers shall be either air- or water-cooled, as indicated. The air shall pass through a sufficient number of tubes to affect cooling. Tubes shall be sized to give maximum heat transfer. Water to unit shall be controlled by a solenoid or pneumatic valve, which opens when the compressors start and closes when the compressors shut down. Cooling capacity of the aftercooler shall be sized for the total capacity of the compressors. Means shall be provided for draining condensed moisture from the receiver by an automatic float type trap. Capacities of air compressors and receivers shall be as indicated.

2.18.2 Lubricated Compressors

Compressors shall be two-stage, Direct or V-belt drive, capable of operating continuously against their designed discharge pressure, and shall operate at a speed not in excess of 1800 rpm. Compressors shall have the capacity and discharge pressure indicated. Compressors shall be assembled complete on a common subbase. The compressor main bearings shall be either roller or ball. The discharge passage of the high pressure air shall be piped to the air receiver with a copper pipe or tubing. A pressure gauge calibrated to 1.03 MPa (150 psi) and equipped with a gauge cock and pulsation dampener shall be furnished for installation adjacent to pressure switches.

2.18.3 Rotary Air Compressor

The air compressor shall be packaged rotary type. Include electric motor driver, integral gears and cases, staged compressors, intercoolers and moisture separators, instruments, controls, lubrication system, steel base and accessories. The aftercoolers may be mounted separately to meet the performance requirements. Capacity shall be as indicated.

2.18.4 Air Receivers

Receivers shall be designed for 1.38 MPa (200 psi) working pressure. Receivers shall be factory air tested to 1-1/2 times the working pressure. Receivers shall be equipped with safety relief valves and accessories, including pressure gauges and drain valve. The outside of air receivers may be galvanized or supplied with commercial enamel finish.

2.18.5 Intake Air Supply Filter

Dry type air filter shall be provided having a collection efficiency of 99 percent of particles larger than 10 microns. Filter body and media shall withstand a maximum 862 kPa (125 psi), capacity as indicated.

2.18.6 Pressure Regulators

The air system shall be provided with the necessary regulator valves to maintain the desired pressure for the installed equipment. Regulators shall be designed for a maximum inlet pressure of 862 kPa (125 psi) and a maximum temperature of 60 degrees C (140 degrees F). Regulators shall be single-seated, pilot-operated with valve plug, bronze body and trim or equal, and threaded connections. The regulator valve shall include a pressure gauge and shall be provided with an adjustment screw for adjusting the pressure differential from 0 kPa to 862 kPa (0 to 125 psi). Regulator shall be sized as indicated.

2.18.7 Compressed Air Dryers

Provide low pressure compressed air dryers of the mechanical refrigeration type, equipped with an automatic temperature shutdown switch to prevent freezing, a regenerative air to air exchanger, and a main compressed air cooling exchanger. Refrigeration system shall cool compressed air to dry the air. Dryer shall have no internal traps or filters and shall have pressure drop not greater than 20.68 kPa (3 psi). Air shall leave the dryer at a dew point temperature of 3 degrees C, based on an inlet temperature of 38 degrees C.

2.18.7.1 Air Circuit

a. Regenerative Heat Exchanger: Inlet compressed air to outlet compressed air heat exchanger designed to reduce cooling load at design conditions minus 7 degrees C (20 degrees F) by inlet air precooling.

b. Main Heat Exchanger: Single-pass, with air in the tubes, heat sink, direct expansion, or flooded cooler type.

c. Separator: code stamp not required; moisture separator low velocity type incorporating change of air flow direction to prevent moisture carryover.

d. Dryer Operating Pressure: 862 kPa (125 psig) working pressure.

e. Drain Line: Provide with exterior mounted condensate trap to facilitate servicing.

2.18.7.2 Refrigeration System

a. Refrigeration Compressor: Hermetic, semi-hermetic, or open reciprocating type equipped with automatic start-stop or unloading capacity control; standard components include inherent motor protection, crankcase oil strainer, and suction screen. Refrigerant shall be R-134a.

b. Dryer Controls: Capable of automatic 0 to 100 percent capacity control. Refrigeration controls shall maintain pressure dew point within the specified range without freezing of condensate. Controls shall include such devices as capillary tube, expansion valve, suction pressure regulator, thermostat, or other approved devices as standard with the manufacturer. Dryer shall have automatic shutdown switch sensor located at point of lowest temperature to prevent freezing.

c. Refrigerant dryer and suction line strainer.

d. Air-cooled condenser, with condenser fan and motor.

2.18.7.3 Instrumentation and Control

Include control panel in dryer cabinet containing:

a. Indicators for the Following Services: Inlet air pressure gage, discharge air pressure gage, inlet air temperature gage, main exchanger temperature gage, "Power On" light, power interruption light, and high temperature light.

b. Electrical Relays: Locate in an enclosed portion of the panel, access.ble for ease of servicing.

c. Controls and Interlocks: To maintain required compressed air dew point and to cycle air-cooled condenser with refrigeration compressor, while maintaining head pressure control with low ambient temperature.

2.18.8 Compressed Air Lubricator

The lubricator shall be oil-fog lubricator featuring adjustment needle on top of the transparent sight dome. The Lubricator drip rate shall be adjustment. The lubricator can be filled while under pressure. The increase or decrease markings on castings shall show direction to turn adjustment screw for oil drip set-up. The units shall have threaded ports for direct connection to pipe. The unit body shall be of metal or the oil capacity shall be 120 ml (4 Oz). The maximum Inlet Pressure shall be 10.4 bar (150 PSIG). The unit shall have 9.5 mm (3/8") port with flow rating of 47 dm 3/s (100 scfm)

2.18.9 Compressed Air Filter Regulator

The filter regulator combination unit shall be compact design with a common inlet and a common outlet. The unit shall have threaded ports for direct connection to pipe. The unit shall have push-pull, non-rising knob for one-hand adjustment. The marking on the knob indicate pressure increase and decrease. The design shall be balanced valve-type diaphragm regulation. The valve and diaphragm can be replaced without removing unit from line. The unit shall have bayonet bowl attachment for filter element removal and automatic drain. The unit body shall be of metal or Polycarbonate. The bowl guard shall be of metal. The filter element shall be porous polypropylene.

2.19 NEUTRALIZATION TANKS (NT)

Plastic Neutralization Tanks:

A. High density Polyethylene or Polypropylene plastic materials, with removable, gastight cover; interior, sidewall, dip-tube inlet; outlet, vent; and threaded or flanged, sidewall pipe connections.

(1) Tank Capacity: As indicated on Drawings.
2. Traffic Cover: Heavy-duty pedestrian or light duty vehicular, steel plate over plastic, bolted.
3. Limestone: Chips or lumps, with more than 90 percent

calcium-carbonate content and 25 mm to 75 mm diameter.
4. Install neutralization tank in concrete vault, at location indicated on the drawings.

2.20 OIL INTERCEPTOR

Provide large capacity, acid-resistant coated interior and exterior fabricated steel oil interceptor with bronze cleanout plug and visible double wall trap seal, removable combination pressure equalizing/flow diffusing baffle and sediment bucket, horizontal baffle, specific gravity oil draw-off valve assembly connections on either side. Interceptor shall have secured gasketed non-skid cover complete with flow control fitting and shall be furnished with inlet and outlet in high position.

2.21 IN-LINE CIRCULATORS

A. Description: In-line circulator, rated for 125-psig minimum working pressure and minimum continuous water temperature of 203 deg F.

1. Impeller: ASTM B 36/B 36M, rolled brass; or ASTM B 584, cast bronze; or corrosion resistant composite PES.
3. Seal: Mechanical.
4. Shaft and Sleeve: Steel or ceramic shaft.
5. Pump Bearings: Oil-lubricated, bronze-journal, thrust type, or carbon axial.

a. Motor Size: For motors larger than 1/2 hp, select motor size that will not overload through full range of pump performance curve.

PART 3 EXECUTION

3.1 GENERAL INSTALLATION REQUIREMENTS

The plumbing system shall be installed complete with necessary fixtures, fittings, traps, valves, and accessories. Water and drainage piping shall be extended 1.5 m outside the building, unless otherwise indicated. A gate valve or ball valve and drain shall be installed on the water service line inside the building approximately 150 mm above the floor from point of entry. Piping shall be connected to the exterior service lines or capped or plugged if the exterior service is not in place. Sewer and water pipes shall be laid in separate trenches, except when otherwise shown. Exterior underground utilities shall be at least 300 mm below the finish grade or as indicated on the drawings. If trenches are closed or the pipes are otherwise covered before being connected to the service lines, the location of the end of each plumbing utility shall be marked with a stake or other acceptable means. Valves shall be installed with control no lower than the valve body.

3.1.1 Water Pipe, Fittings, and Connections

3.1.1.1 Utilities

The piping shall be extended to outlets, and equipment. The cold-water piping system shall be arranged and installed to permit draining. The supply line to each item of equipment shall be equipped with a shutoff valve to enable isolation of the item for repair and maintenance without interfering with operation of other equipment. Supply piping to devices shall be anchored to prevent movement.

3.1.1.2 Cutting and Repairing

The work shall be carefully laid out in advance, and unnecessary cutting of construction shall be avoided. Damage to building, piping, wiring, or equipment as a result of cutting shall be repaired by mechanics skilled in the trade involved.

3.1.1.3 Protection of Fixtures, Materials, and Equipment

Pipe openings shall be closed with caps or plugs during installation. Fixtures and equipment shall be tightly covered and protected against dirt, water, chemicals, and mechanical injury. Upon completion of the work, the fixtures, materials, and equipment shall be thoroughly cleaned, adjusted, and operated. Safety guards shall be provided for exposed rotating equipment.

3.1.1.4 Mains, Branches, and Runouts

Piping shall be installed as indicated. Pipe shall be accurately cut and worked into place without springing or forcing. Structural portions of the building shall not be weakened. Aboveground piping shall run parallel with the lines of the building, unless otherwise indicated. Branch pipes from service lines may be taken from top, bottom, or side of main, using crossover fittings required by structural or installation conditions. Supply pipes, valves, and fittings shall be kept a sufficient distance from other work and other services to permit not less than 12 mm between finished covering on the different services. Bare and insulated water lines shall not bear directly against building structural elements so as to transmit sound to the structure or to prevent flexible movement of the lines. Water pipe shall not be buried in or under floors unless specifically indicated or approved. Changes in pipe sizes shall be made with reducing fittings. Use of bushings will not be permitted except for use in situations in which standard factory fabricated components are furnished to accommodate specific accepted installation practice. Change in direction shall be made with fittings, except that bending of pipe 100 mm (4 inches) and smaller will be permitted, provided a pipe bender is used and wide sweep bends are formed. The center-line radius of bends shall be not less than six diameters of the pipe. Bent pipe showing kinks, wrinkles, flattening, or other malformations will not be acceptable.

3.1.1.5 Pipe Drains

Pipe drains indicated shall consist of 20 mm (3/4 inch) hose bibb with renewable seat and gate or ball valve ahead of hose bibb. At other low points, 20 mm (3/4 inch) brass plugs or caps shall be provided. Disconnection of the supply piping at the fixture is an acceptable drain.

3.1.1.6 Expansion and Contraction of Piping

Allowance shall be made throughout for expansion and contraction of waterpipe. Each hot-water and hot-water circulation riser shall have expansion loops or other provisions such as offsets, changes in direction, etc., where indicated and/or required. Risers shall be securely anchored as required or where indicated to force expansion to loops. Branch connections from risers shall be made with ample swing or offset to avoid undue strain on fittings or short pipe lengths. Horizontal runs of pipe over 15 m in length shall be anchored to the wall or the supporting construction about midway on the run to force expansion, evenly divided, toward the ends.

Sufficient flexibility shall be provided on branch runouts from mains and risers to provide for expansion and contraction of piping. Flexibility shall be provided by installing one or more turns in the line so that piping will spring enough to allow for expansion without straining.

3.1.1.7 Thrust Restraint

Plugs, caps, tees, valves and bends deflecting 11.25 degrees or more, either vertically or horizontally, in waterlines 100 mm in diameter or larger shall be provided with thrust blocks, where indicated, to prevent movement. Thrust blocking shall be concrete of a mix not leaner than: 1 cement, 2-1/2 sand, 5 gravel; and having a compressive strength of not less than 14 MPa after 28 days. Blocking shall be placed between solid ground and the fitting to be anchored. Unless otherwise indicated or directed, the base and thrust bearing sides of the thrust block shall be poured against undisturbed earth. The side of the thrust block not subject to thrust shall be poured against forms. The area of bearing will be as shown. Blocking shall be placed so that the joints of the fitting are accessible for repair. Steel rods and clamps, protected by galvanizing or by coating with bituminous paint, shall be used to anchor vertical down bends into gravity thrust blocks.

3.1.1.8 Commercial-Type Water Hammer Arresters

Commercial-type water hammer arresters shall be provided on hot- and cold-water supplies and shall be located as generally indicated, with precise location and sizing to be in accordance with PDI WH 201. Water hammer arresters, where concealed, shall be accessible by means of access doors or removable panels. Commercial-type water hammer arresters shall conform to ASSE 1010. Vertical capped pipe columns will not be permitted.

3.1.2 Commercial-Type Water Hammer Arresters

Commercial-type water hammer arresters shall be provided on hot- and cold-water supplies and shall be located as generally indicated, with precise location and sizing to be in accordance with PDI WH 201. Water hammer arresters, where concealed, shall be accessible by means of access doors or removable panels. Commercial-type water hammer arresters shall conform to PDI WH 201. Vertical capped pipe columns will not be permitted.

3.1.3 Compressed Air Piping (Non-Oil Free)

Compressed air piping shall be installed as specified for metallic water piping and suitable for 862 kPa (125 psig) working pressure. Compressed air piping shall have supply lines and discharge terminals legibly and permanently marked at both ends with the name of the system and the direction of flow.

3.1.4 Joints

Installation of pipe and fittings shall be made in accordance with the manufacturer's recommendations. Mitering of joints for elbows and notching of straight runs of pipe for tees will not be permitted. Joints shall be made up with fittings of compatible material and made for the specific purpose intended.

3.1.4.1 Threaded

Threaded joints shall have taper pipe threads conforming to ASME B1.20.1.

Only male pipe threads shall be coated with graphite or with an approved graphite compound, or with an inert filler and oil, or shall have a polytetrafluoroethylene tape applied.

3.1.4.2 Unions and Flanges

Unions, and flanges shall not be concealed in walls, ceilings, or partitions. Unions shall be used on pipe sizes 65 mm (2-1/2 inches) and smaller; flanges shall be used on pipe sizes 80 mm (3 inches) and larger.

3.1.4.3 Plastic Pipe

PVC pipe shall have joints made with solvent cement elastomeric, threading, (threading of Schedule 80 Pipe is allowed only where required for disconnection and inspection; threading of Schedule 40 Pipe is not allowed), or mated flanged.

3.1.5 Corrosion Protection for Buried Pipe and Fittings

3.1.5.1 Steel

Steel pipe, joints, and fittings shall be cleaned, coated with primer, and wrapped with tape. Pipe shall be cleaned, coated, and wrapped prior to pipe tightness testing. Joints and fittings shall be cleaned, coated, and wrapped after pipe tightness testing. Tape shall be applied with a 50 percent overlap. Primer shall be as recommended by the tape manufacturer.

3.1.6 Pipe Sleeves and Flashing

Pipe sleeves shall be furnished and set in their proper and permanent location.

3.1.6.1 Sleeve Requirements

Pipes passing through concrete or masonry walls or concrete floors or roofs shall be provided with pipe sleeves fitted into place at the time of construction. Sleeves are not required for supply, drainage, waste and vent pipe passing through concrete slab on grade, except where penetrating a membrane waterproof floor. A modular mechanical type sealing assembly may be installed in lieu of a waterproofing clamping flange and caulking and sealing of annular space between pipe and sleeve. The seals shall consist of interlocking synthetic rubber links shaped to continuously fill the annular space between the pipe and sleeve using galvanized steel bolts, nuts, and pressure plates. The links shall be loosely assembled with bolts to form a continuous rubber belt around the pipe with a pressure plate under each bolt head and each nut. After the seal assembly is properly positioned in the sleeve, tightening of the bolt shall cause the rubber sealing elements to expand and provide a watertight seal between the pipe and the sleeve. Each seal assembly shall be sized as recommended by the manufacturer to fit the pipe and sleeve involved. Sleeves shall not be installed in structural members, except where indicated or approved. Rectangular and square openings shall be as detailed. Each sleeve shall extend through its respective floor, or roof, and shall be cut flush with each surface, except for special circumstances. Pipe sleeves passing through floors in wet areas such as mechanical equipment rooms, lavatories, kitchens, and other plumbing fixture areas shall extend a minimum of 100 mm above the finished floor. Unless otherwise indicated, sleeves shall be of a size to provide a minimum of 6 mm (1/4 inch) clearance between bare pipe or insulation and inside of sleeve or between insulation and inside of

sleeve. Sleeves in bearing walls and concrete slab on grade floors shall be steel pipe or cast-iron pipe. Sleeves in nonbearing walls or ceilings may be steel pipe, cast-iron pipe, galvanized sheet metal with lock-type longitudinal seam, or plastic. Except as otherwise specified, the annular space between pipe and sleeve, or between jacket over insulation and sleeve, shall be sealed as indicated with sealants conforming to ASTM C 920 and with a primer, backstop material and surface preparation as specified in Section 07900 JOINT SEALING. The annular space between pipe and sleeve,between bare insulation and sleeve or between jacket over insulation and sleeve shall not be sealed for interior walls which are not designated as fire rated. Sleeves through below-grade walls in contact with earth shall be recessed 12 mm (1/2 inch) from wall surfaces on both sides. Annular space between pipe and sleeve shall be filled with backing material and sealants in the joint between the pipe and masonry wall as specified above. Sealant selected for the earth side of the wall shall be compatible with dampproofing/waterproofing materials that are to be applied over the joint sealant.

3.1.6.2 Flashing Requirements

Pipes passing through roof shall be installed through a 4.9 kg per square meter (16 ounce) copper flashing, each within an integral skirt or flange. Flashing shall be suitably formed, and the skirt or flange shall extend not less than 200 mm from the pipe and shall be set over the roof or floor membrane in a solid coating of bituminous cement. The flashing shall extend up the pipe a minimum of 250 mm. For cleanouts, the flashing shall be turned down into the hub and caulked after placing the ferrule. Pipes passing through pitched roofs shall be flashed, using lead or copper flashing, with an adjustable integral flange of adequate size to extend not less than 200 mm from the pipe in all directions and lapped into the roofing to provide a watertight seal. The annular space between the flashing and the bare pipe or between the flashing and the metal-jacket-covered insulation shall be sealed as indicated. Flashing for dry vents shall be turned down into the pipe to form a waterproof joint. Pipes, up to and including 250 mm (10 inches) in diameter, passing through roof or floor waterproofing membrane may be installed through a cast-iron sleeve with caulking recess, anchor lugs, flashing-clamp device, and pressure ring with brass bolts. Flashing shield shall be fitted into t sleeve clamping device. Pipes passing through wall waterproofing membrane shall be sleeved as described above. A waterproofing clamping flange shall be installed.

3.1.6.3 Waterproofing

Waterproofing at floor-mounted water closets shall be accomplished by forming a flashing guard from soft-tempered sheet copper. The center of the sheet shall be perforated and turned down approximately 40 mm to fit between the outside diameter of the drainpipe and the inside diameter of the cast-iron or steel pipe sleeve. The turned-down portion of the flashing guard shall be embedded in sealant to a depth of approximately 40 mm; then the sealant shall be finished off flush to floor level between the flashing guard and drainpipe. The flashing guard of sheet copper shall extend not less than 200 mm from the drainpipe and shall be lapped between the floor membrane in a solid coating of bituminous cement.

3.1.6.4 Optional Counterflashing

Instead of turning the flashing down into a dry vent pipe, or caulking and sealing the annular space between the pipe and flashing or

metal-jacket-covered insulation and flashing, counterflashing may be accomplished by utilizing the following:

a. A standard roof coupling for threaded pipe up to 150 mm (6 inches) in diameter.

b. A tack-welded or banded-metal rain shield around the pipe.

3.1.6.5 Pipe Penetrations of Slab on Grade Floors

Where pipes, fixture drains, floor drains, cleanouts or similar items penetrate slab on grade floors, except at penetrations of floors with waterproofing membrane as specified in paragraphs Flashing Requirements and Waterproofing, a groove 6 to 13 mm wide by 6 to 10 mm deep shall be formed around the pipe, fitting or drain. The groove shall be filled with a sealant as specified in Section 07900 JOINT SEALING.

3.1.7 Supports

3.1.7.1 General

Hangers used to support piping 50 mm (2 inches) and larger shall be fabricated to permit adequate adjustment after erection while still supporting the load. Pipe guides and anchors shall be installed to keep pipes in accurate alignment, to direct the expansion movement, and to prevent buckling, swaying, and undue strain. Piping subjected to vertical movement when operating temperatures exceed ambient temperatures shall be supported by variable spring hangers and supports or by constant support hangers. In the support of multiple pipe runs on a common base member, a clip or clamp shall be used where each pipe crosses the base support member. Spacing of the base support members shall not exceed the hanger and support spacing required for an individual pipe in the multiple pipe run. Threaded sections of rods shall not be formed or bent.

3.1.7.2 Pipe Supports and Structural Bracing, Seismic Requirements

Structural steel required for reinforcement to properly support piping, headers, and equipment, but not shown, shall be provided.

3.1.7.3 Pipe Hangers, Inserts, and Supports

Installation of pipe hangers, inserts and supports shall conform to MSS SP-58 and MSS SP-69, except as modified herein.

a. Inserts shall be secured to concrete forms before concrete is placed. Continuous inserts which allow more adjustment may be used.

b. C-clamps shall be torqued per MSS SP-69 and shall have both locknuts and retaining devices furnished by the manufacturer. Field-fabricated C-clamp bodies or retaining devices are not acceptable.

c. Attachments used on angles and channels shall be furnished with an added malleable-iron heel plate or adapter.

d. Saddles shall be used on insulated pipe 100 mm and larger when the temperature of the medium is 15 degrees C or higher. Saddles shall be welded to the pipe.

e. Shields shall:

(1) Be used on insulated pipe less than 100 mm.
(2) Be used on insulated pipe 100 mm and larger when the temperature of the medium is 15 degrees C or less.
(3) Have a high density insert for all pipe sizes. High density inserts shall have a density of 128 kg per cubic meter (8 pcf)or greater.

f. Horizontal pipe supports shall be spaced as specified in MSS SP-69 and a support shall be installed not over 300 mm from the pipe fitting joint at each change in direction of the piping. Pipe supports shall be spaced not over 1.5 m apart at valves. Operating temperatures in determining hanger spacing for PVC pipe shall be 49 degrees C. Horizontal pipe runs shall include allowances for expansion and contraction.

g. Vertical pipe shall be supported at each floor, except at slab-on-grade, at intervals of not more than 4.5 m nor more than 2 m from end of risers, and at vent terminations. Vertical pipe risers shall include allowances for expansion and contraction.

h. Guides using steel, reinforced polytetrafluoroethylene (PTFE) or graphite slides shall be provided to allow longitudinal pipe movement. Slide materials shall be suitable for the system operating temperatures, atmospheric conditions, and bearing loads encountered. Lateral restraints shall be provided as needed. Where steel slides do not require provisions for lateral restraint the following may be used:

(1) On pipe 100 mm and larger when the temperature of the medium is 15 degrees C or higher, a saddle, welded to the pipe, may freely rest on a steel plate.

(2) On pipe less than 100 mm a shield, attached to the pipe or insulation, may freely rest on a steel plate.

(3) On pipe 100 mm and larger carrying medium less that 15 degrees C a shield, attached to the pipe or insulation, may freely rest on a steel plate.

i. Pipe hangers on horizontal insulated pipe shall be the size of the outside diameter of the insulation. The insulation shall be continuous through the hanger on all pipe sizes and applications.

j. Where there are high system temperatures and welding to piping is not desirable, the guide shall include a pipe cradle, welded to the guide structure and strapped securely to the pipe. The pipe shall be separated from the slide material by at least 100 mm or by an amount adequate for the insulation, whichever is greater.

k. Hangers and supports for plastic pipe shall not compress, distort, cut or abrade the piping, and shall allow free movement of pipe except where otherwise required in the control of expansion/contraction.

3.1.8 Pipe Cleanouts

Pipe cleanouts shall be the same size as the pipe except that cleanout plugs larger than 100 mm (4 inches) will not be required. Cleanouts in connection with pipe, where indicated, shall be T-pattern, 90-degree branch drainage fittings with plastic plugs . Plugs shall be the same size as the pipe up to and including 100 mm (4 inches). Cleanout tee branches with screw plug shall be installed at the foot of soil and waste stacks, at the foot of interior downspouts, on each connection to building storm drain where interior downspouts are indicated, and on each building drain outside the building. Cleanout tee branches may be omitted on stacks in single story buildings with slab-on-grade construction or where less than 450 mm of crawl space is provided under the floor. Cleanouts on pipe concealed in partitions shall be provided with chromium plated bronze, nickel bronze, nickel brass or stainless steel flush type access cover plates. Round access covers shall be provided and secured to plugs with securing screw. Square access covers may be provided with matching frames, anchoring lugs and cover screws. Cleanouts in finished walls shall have access covers and frames installed flush with the finished wall. Cleanouts installed in finished floors subject to foot traffic shall be provided with a chrome-plated cast brass, nickel brass, or nickel bronze cover secured to the plug or cover frame and set flush with the finished floor. Heads of fastening screws shall not project above the cover surface. Where cleanouts are provided with adjustable heads, the heads shall be plastic.

Basis of Design: Mast; Model CO-50; Smith 4051 series; Zurn or equivalent.

3.2 FIXTURE TRIMMINGS

3.2.1 Access Panels

Access panels shall be provided for concealed valves and controls, or any item requiring inspection or maintenance. Access panels shall be of sufficient size and located so that the concealed items may be serviced, maintained, or replaced.

3.2.2 Sight Drains

Sight drains shall be installed so that the indirect waste will terminate 50 mm above the flood rim of the funnel to provide an acceptable air gap.

3.2.3 Traps

Each trap shall be placed as near the fixture as possible, and no fixture shall be double-trapped. Traps installed on steel pipe shall be recess-drainage pattern, or brass-tube type. Traps installed on plastic pipe may be plastic.

3.3 IDENTIFICATION SYSTEMS

3.3.1 Identification Tags

Identification tags made of brass, engraved laminated plastic, or engraved anodized aluminum, indicating service and valve number shall be installed on valves, except those valves installed on supplies at plumbing fixtures. Tags shall be 35 mm (1-3/8 inch) minimum diameter, and marking shall be stamped or engraved. Indentations shall be black, for reading clarity. Tags shall be attached to valves with 4 sq. mm, copper wire, chrome-plated beaded chain, or plastic straps designed for that purpose.

3.4 ESCUTCHEONS

Escutcheons shall be provided at finished surfaces where bare or insulated piping, exposed to view, passes through floors, walls, or ceilings, except in boiler, utility, or equipment rooms. Escutcheons shall be fastened securely to pipe or pipe covering and shall be satin-finish, corrosion-resisting steel, polished chromium-plated zinc alloy, or polished chromium-plated copper alloy. Escutcheons shall be either one-piece or split-pattern, held in place by internal spring tension or setscrew.

3.5 PAINTING

Painting of pipes, hangers, supports, and other iron work, either in concealed spaces or exposed spaces, is specified in Section 09900 PAINTS AND COATINGS.

3.6 TESTS, FLUSHING AND DISINFECTION

3.6.1 Plumbing System

The following tests shall be performed on the plumbing system in accordance with ICC International Plumbing Code.

3.6.1.1 Test of Backflow Prevention Assemblies

Backflow prevention assembly shall be tested using gauges specifically designed for the testing of backflow prevention assemblies. Gauges shall be tested annually for accuracy in accordance with ICC International Plumbing Code requirements and ASTM standards. Report form for each assembly shall include, as a minimum, the following:

Data on Device	Data on Testing Firm
Type of Assembly	Name
Manufacturer	Address
Model Number	Certified Tester
Serial Number	Certified Tester No.
Size	Date of Test
Location	
Test Pressure Readings	Serial Number and Test Data of Gauges

If the unit fails to meet specified requirements, the unit shall be repaired and retested.

3.6.1.2 Compressed Air Piping (Nonoil-Free)

Piping systems shall be filled with oil-free dry air or gaseous nitrogen to 1.03 MPa and hold this pressure for 2 hours with no drop in pressure.

3.6.2 Defective Work

If inspection or test shows defects, such defective work or material shall be replaced or repaired as necessary and inspection and tests shall be repeated. Repairs to piping shall be made with new materials. Caulking of screwed joints or holes will not be acceptable.

3.6.3 Operational Test

Upon completion of flushing and prior to disinfection procedures, the Contractor shall subject the plumbing system to operating tests to demonstrate satisfactory functional and operational efficiency. Such operating tests shall cover a period of not less than 8 hours for each system and shall include the following information in a report with conclusion as to the adequacy of the system:

a. Time, date, and duration of test.
b. Water pressures at the most remote and the highest fixtures.
c. Operation of each floor drain by flooding with water.
d. Compressed air readings at each compressor and at each outlet. Each indicating instrument shall be read at 1/2 hour intervals. The report of the test shall be submitted in quadruplicate. The Contractor shall furnish instruments, equipment, and personnel required for the tests; the Government will furnish the necessary water and electricity.

3.7 WATER HEATERS AND HOT WATER STORAGE TANKS

Electric water heater shall have capacity as indiecated on Drawings, safety relief valve, thermal sensing element, magnesium anode and will be enamel coated.

3.7.1 Relief Valves

No valves shall be installed between a relief valve and its water heater or storage tank. The P&T relief valve shall be installed where the valve actuator comes in contact with the hottest water in the heater. Whenever possible, the relief valve shall be installed directly in a tapping in the tank or heater; otherwise, the P&T valve shall be installed in the hot-water outlet piping. A vacuum relief valve shall be provided on the cold water supply line to the hot-water storage tank or water heater and mounted above and within 150 mm above the top of the tank or water heater.

3.7.2 Heat Traps

Piping to and from each water heater and hot water storage tank shall be routed horizontally and downward a minimum of 600 mm before turning in an upward direction.

3.7.3 Connections to Water Heaters

Connections of metallic pipe to water heaters shall be made with dielectric unions or flanges.

3.8 FIXTURES AND FIXTURE TRIMMINGS

Polished chromium-plated pipe, valves, and fittings shall be provided where exposed to view. Angle stops, straight stops, stops integral with the faucets, or concealed type of lock-shield, and loose-key pattern stops for supplies with threaded, sweat or solvent weld inlets shall be furnished and installed with fixtures. Where connections between copper tubing and faucets are made by rubber compression fittings, a beading tool shall be used to mechanically deform the tubing above the compression fitting. Exposed traps and supply pipes for fixtures and equipment shall be connected to the rough piping systems at the wall, unless otherwise specified under the item. Floor and wall escutcheons shall be as

specified. Drain lines and hot water lines of fixtures for handicapped personnel shall be insulated and do not require polished chrome finish. Plumbing fixtures and accessories shall be installed within the space shown.

3.8.1 Fixture Connections

Where space limitations prohibit standard fittings in conjunction with the cast-iron floor flange, special short-radius fittings shall be provided. Connections between earthenware fixtures and flanges on soil pipe shall be made gastight and watertight with a closet-setting compound or neoprene gasket and seal. Use of natural rubber gaskets or putty will not be permitted. Fixtures with outlet flanges shall be set the proper distance from floor or wall to make a first-class joint with the closet-setting compound or gasket and fixture used.

3.8.2 Height of Fixture Rims Above Floor

Lavatories shall be mounted with rim 775 mm above finished floor. Wall-hung drinking fountains and water coolers shall be installed with rim 1020 mm above floor. Wall-hung service sinks shall be mounted with rim 700 mm above the floor.

3.8.3 Fixture Supports

Fixture supports for off-the-floor lavatories, urinals, and other fixtures of similar size, design, and use, shall be of the chair-carrier type. The carrier shall provide the necessary means of mounting the fixture, with a foot or feet to anchor the assembly to the floor slab. Adjustability shall be provided to locate the fixture at the desired height and in proper relation to the wall. Support plates, in lieu of chair carrier, shall be fastened to the wall structure only where it is not possible to anchor a floor-mounted chair carrier to the floor slab.

3.8.3.1 Support for Solid Masonry Construction

Chair carrier shall be anchored to the floor slab. Where a floor-anchored chair carrier cannot be used, a suitable wall plate shall be imbedded in the masonry wall.

3.8.3.2 Support for Concrete-Masonry Wall Construction

Chair carrier shall be anchored to floor slab. Where a floor-anchored chair carrier cannot be used, a suitable wall plate shall be fastened to the concrete wall using through bolts and a back-up plate.

3.8.4 Backflow Prevention Devices

Plumbing fixtures, equipment, and pipe connections shall not cross connect or interconnect between a potable water supply and any source of nonpotable water. Backflow preventers shall be installed where indicated and in accordance with ICC Intl Plumbing Code at all other locations necessary to preclude a cross-connect or interconnect between a potable water supply and any nonpotable substance. In addition backflow preventers shall be installed at all locations where the potable water outlet is below the flood level of the equipment, or where the potable water outlet will be located below the level of the nonpotable substance. Backflow preventers shall be located so that no part of the device will be submerged. Backflow preventers shall be of sufficient size to allow unrestricted flow of water to the equipment, and preclude the backflow of any nonpotable substance

into the potable water system. Bypass piping shall not be provided around backflow preventers. Access shall be provided for maintenance and testing. Each device shall be a standard commercial unit.

3.8.5 Access Panels

Access panels shall be provided for concealed valves and controls, or any item requiring inspection or maintenance. Access panels shall be of sufficient size and located so that the concealed items may be serviced, maintained, or replaced.

3.8.6 Sight Drains

Sight drains shall be installed so that the indirect waste will terminate 50 mm above the flood rim of the funnel to provide an acceptable air gap.

3.8.7 Traps

Each trap shall be placed as near the fixture as possible, and no fixture shall be double-trapped. Traps installed on steel pipe shall be recess-drainage pattern, or brass-tube type. Traps installed on plastic pipe may be plastic.

3.9 IDENTIFICATION SYSTEMS

3.9.1 Identification Tags

Identification tags made of brass, engraved laminated plastic, or engraved anodized aluminum, indicating service and valve number shall be installed on valves, except those valves installed on supplies at plumbing fixtures. Tags shall be 35 mm (1-3/8 inch) minimum diameter, and marking shall be stamped or engraved. Indentations shall be black, for reading clarity. Tags shall be attached to valves with 4 sq. mm, copper wire, chrome-plated beaded chain, or plastic straps designed for that purpose.

3.10 ESCUTCHEONS

Escutcheons shall be provided at finished surfaces where bare or insulated piping, exposed to view, passes through floors, walls, or ceilings, except in boiler, utility, or equipment rooms. Escutcheons shall be fastened securely to pipe or pipe covering and shall be satin-finish, corrosion-resisting steel, polished chromium-plated zinc alloy, or polished chromium-plated copper alloy. Escutcheons shall be either one-piece or split-pattern, held in place by internal spring tension or setscrew.

3.11 PAINTING

Painting of pipes, hangers, supports, and other iron work, either in concealed spaces or exposed spaces, is specified in Section 09900 PAINTS AND COATINGS.

3.12 TESTS, FLUSHING AND DISINFECTION

3.12.1 Plumbing System

The following tests shall be performed on the plumbing system in accordance with ICC Intl Plumbing Code.

3.12.1.1 Test of Backflow Prevention Assemblies

Backflow prevention assembly shall be tested using gauges specifically designed for the testing of backflow prevention assemblies. Gauges shall be tested annually for accuracy in accordance with ICC Intl Plumbing Code requirements and ASTM standards. Report form for each assembly shall include, as a minimum, the following:

Data on Device	Data on Testing Firm
Type of Assembly	Name
Manufacturer	Address
Model Number	Certified Tester
Serial Number	Certified Tester No.
Size	Date of Test
Location	
Test Pressure Readings	Serial Number and Test Data of Gauges

If the unit fails to meet specified requirements, the unit shall be repaired and retested.

3.12.2 Defective Work

If inspection or test shows defects, such defective work or material shall be replaced or repaired as necessary and inspection and tests shall be repeated. Repairs to piping shall be made with new materials. Caulking of screwed joints or holes will not be acceptable.

3.12.3 System Flushing

3.12.3.1 During Flushing

Before operational tests or disinfection, potable water piping system shall be flushed with potable water. Sufficient water shall be used to produce a water velocity that is capable of entraining and removing debris in all portions of the piping system. This requires simultaneous operation of all fixtures on a common branch or main in order to produce a flushing velocity of approximately 1.2 meters per second (4 fps) through all portions of the piping system. In the event that this is impossible due to size of system, the Government (or the designated representative) shall specify the number of fixtures to be operated during flushing. Contractor shall provide adequate personnel to monitor the flushing operation and to ensure that drain lines are unobstructed in order to prevent flooding of the facility. Contractor shall be responsible for any flood damage resulting from flushing of the system. Flushing shall be continued until entrained dirt and other foreign materials have been removed and until discharge water shows no discoloration. All faucets and drinking water fountains, to include any device considered as an end point device shall be flushed a minimum of 1 L per 24 hour period, ten times over a 14 day period.

3.12.3.2 After Flushing

System shall be drained at low points. Strainer screens shall be removed, cleaned, and replaced. After flushing and cleaning, systems shall be prepared for testing by immediately filling water piping with clean, fresh potable water. Any stoppage, discoloration, or other damage to the finish, furnishings, or parts of the building due to the Contractor's failure to properly clean the piping system shall be repaired by the Contractor. When the system flushing is complete, the hot-water system shall be adjusted for

uniform circulation. Flushing devices and automatic control systems shall be adjusted for proper operation. The water supply to the building shall be tested separately to ensure that any lead contamination found during potable water system testing is due to work being performed inside the building.

3.12.4 Operational Test

Upon completion of flushing and prior to disinfection procedures, the Contractor shall subject the plumbing system to operating tests to demonstrate satisfactory functional and operational efficiency. Such operating tests shall cover a period of not less than 8 hours for each system and shall include the following information in a report with conclusion as to the adequacy of the system:

a. Time, date, and duration of test.

b. Water pressures at the most remote and the highest fixtures.

c. Operation of each fixture and fixture trim.

d. Operation of each valve, hydrant, and faucet.

f. Temperature of each domestic hot-water supply.

g. Operation of each floor and roof drain by flooding with water.

h. Operation of each vacuum breaker and backflow preventer.

i. Complete operation of each water pressure booster system, including pump start pressure and stop pressure.

j. Compressed air readings at each compressor and at each outlet. Each indicating instrument shall be read at 1/2 hour intervals. The report of the test shall be submitted in quadruplicate. The Contractor shall furnish instruments, equipment, and personnel required for the tests; the Government will furnish the necessary water and electricity.

3.12.5 Disinfection

After operational tests are complete, the entire domestic hot- and cold-water distribution system shall be disinfected. System shall be flushed as specified, before introducing chlorinating material. The chlorinating material shall be hypochlorites or liquid chlorine. Water chlorination procedure shall be in accordance with AWWA M20. The chlorinating material shall be fed into the water piping system at a constant rate at a concentration of at least 50 parts per million (ppm). A properly adjusted hypochlorite solution injected into the main with a hypochlorinator, or liquid chlorine injected into the main through a solution-feed chlorinator , shall be used. The chlorine residual shall be checked at intervals to ensure that the proper level is maintained. Chlorine application shall continue until the entire main is filled. The water shall remain in the system for a minimum of 24 hours. Each valve in the system being disinfected shall be opened and closed several times during the contact period to ensure its proper disinfection. Following the 24-hour period, no less than 25 ppm chlorine residual shall remain in the system. Water tanks shall be disinfected by the addition of chlorine directly to the filling water. Following a 6 hour period, no less than 50

ppm chlorine residual shall remain in the tank. If after the 24 hour and 6 hour holding periods, the residual solution contains less than 25 ppm and 50 ppm chlorine respectively, flush the piping and tank with potable water, and repeat the above procedures until the required residual chlorine levels are satisfied. The system including the tanks shall then be flushed with clean water until the residual chlorine level is reduced to less than one part per million. During the flushing period each valve and faucet shall be opened and closed several times. Samples of water in disinfected containers shall be obtained from several locations selected by the Government. The samples of water shall be tested for total coliform organisms (coliform bacteria, fecal coliform, streptococcal, and other bacteria) in accordance with AWWA EWW. The testing method used shall be either the multiple-tube fermentation technique or the membrane-filter technique. Disinfection shall be repeated until tests indicate the absence of coliform organisms (zero mean coliform density per 100 milliliters) in the samples for at least 2 full days. The system will not be accepted until satisfactory bacteriological results have been obtained.

3.13 PLUMBING FIXTURE SCHEDULE

P-1 EASTERN WATER CLOSET:

Eastern style toilets shall be constructed of enameled cast iron, vitreous china, or porcelain. Toilet shall be capable of flushing from tank with a minimum of 6.0 liters of water. Toilet shall be recessed, floor-mounted, and designed to mount flush with the finished floor. The exposed portion of the toilet shall be generally rectangular in shape. Channels placed in foot pads to provide skid proofing shall allow positive drainage into the bowl. All toilet rooms shall be designed with toilet fixtures facing north/south away from Mecca.

Toilet shall be completely self-supporting, not requiring any external supports other than the floor and shall include necessary appurtenances to provide gasket-type water-tight sealing of the floor waterproofing membrane against the toilet base. Water supply connections shall be made above the floor waterproofing membrane and shall be of the back orientation as detailed on the drawings. Waste connection shall be minimum 75 mm. Trap may be built-in or separate rotatable, "P" trap. All eastern water closets shall be provided with a wall mounted faucet and spray hose.

P-1A WESTERN WATER CLOSET:

Elongated bowl with flush tank, supply spud, floor mounted.

Seat - white plastic.

Flush Tank - An adequate quantity of water shall be provided to flush and clean the fixture served. The water supply to flush tanks equipped for manual flushing shall be controlled by a float valve or other automatic device designed to refill the tank after each discharge, and to completely shut off the water flow to the tank when the tank is filled to operational capacity.

P-2 FLUSH VALVE URINALS

White vitreous china, wall-mounted, wall outlet,
siphon jet, integral trap, and extended side shields. Provide urinal with the rim 610 mm above the floor. Water flushing volume of the urinal and flush valve combination shall not exceed 3.8 liters per flush. Provide ASME

A112.6.1M concealed chair carriers with vertical steel pipe supports. Provide large diameter flush valve including angle control-stop valve, vacuum breaker, tail pieces, slip nuts, and wall plates; exposed to view components shall be chromium-plated or polished stainless steel. Flush valves shall be nonhold-open type. Mount flush valves not less than 279 mm 11 inches above the fixture.

P-3 LAVATORY (WALL HUNG):

Manufacturer's standard sink depth, enameled cast iron or vitreous china.

Faucet - Faucets shall be single control, mixing type. Faucets shall have replaceable seats and washers. Connection between valve and spout for center-set faucet shall be of rigid metal tubing.
Drain - Pop-up drain shall include stopper, lift rods, jam nut, washer, and tail piece.

P-3A MULTI-FAUCET SINK:

Multi-faucet sink shall be 1.8 m wide trough type constructed of poured in-place concrete or filled concrete block with ceramic tile exterior and stainless steel lining capable of withstanding abuse. Maximum width is 1.8 m individual troughs shall serve only three (3) individuals with three (3) spigots with hot and cold water and two drains.

Faucet - Faucets shall be single control, mixing type. Faucets shall have replaceable seats and washers. Valves and handles shall be copper alloy. Connection between valve and spout for center-set faucet shall be of rigid metal tubing. Provide manual mixing with hot and cold water valves. See Architectural drawings for quantities.

Drain - Pipe size as indicated on Drawings.

P-3B LAVATORY (COUNTED MOUNTED:

Manufacturer's standard sink depth, enameled cast iron or vitreous china.

Faucet - Faucets shall be single control, mixing type, counter mounted. Faucets shall have replaceable seats and washers. Connection between valve and spout for center-set faucet shall be of rigid metal tubing.
Drain - Pop-up drain shall include stopper, lift rods, jam nut, washer, and tail piece.

P-4 JANITOR'S SINK:

Floor mount janitor, enameled cast iron with copper alloy rim guard sink or built up Janitor sink. Provide hot and cold water valves with manual mixing.

Provide Janitor's sink in all large Administration and Support buildings like Community Center, Garrison and Brigade Headquarters.

P-5 SHOWER: Shower heads, other than emergency showers, shall be nonadjustable spray type.

Wall Mounted: Shower head shall be nonadjustable spray, stainless steel or chromium plated brass with ball joint. Handles shall be manufacturer's option. Control valves shall be copper alloy , nickel alloy, or stainless steel. Valves shall be mechanical mixing, with spearate hot and cold

water. Shower head shall be vandalproof with integral back. Each shower compartment shall be additionally furnished with a flexible 1.5 m spray hose, with hanger, attached to a hose faucet mounted below the control valve. The shower head and the spray hose shall each have a valve so flow can be diverted to either outlet.

P-7 EMERGENCY SHOWER AND EYE WASH ASSEMBLY: ISEA Z358.1, floor supported free standing unit. Provide deluge shower head, stay-open ball valve operated by pull rod and ring or traingular handle. Provide eyewash and stay-open ball valve operated by foot treadle or push handle.

P-8 SERVICE SINK:

Enameled cast iron, copper alloy or stainless steel corner, floor mounted, or built-up service sink, size as indicated on Drawings or approved by Government. Service sinks provided in battery rooms shall be acid resistant.

Faucet and Spout - Cast or wrought copper alloy, with top or bottom brace. Faucets shall have replaceable seat and the washer shall rotate onto the seat. Handles shall be lever type. Strainers shall have internal threads.

P-9 KITCHEN SINK:

Ledge back with hole for faucet and spout single bowl, size as indicated on Drawings, stainless steel.

Faucet and Spout - Faucets shall be cast or wrought copper alloy.

Handles - Cast copper alloy, wrought copper alloy, or stainless steel.

Drain Assembly - Plug, cup strainer, crossbars, jam nuts, washers, couplings, stopper, etc., shall be copper alloy or stainless steel.

P-10 ABLUTION TRENCH, MIXING VALVE:

See architectural plan for size and construction of trench and number of stations. Provide trench drain with grating. Provide each station with hot and cold water valves with backflow preventer on the outlet and with a flexible 1.5 m spray hose mounted below the control valves and provided with a hanger. Faucet handles shall be copper alloy.

P-11 GREASE INTERCEPTOR:

Steel construction, manual cleaning type with removable checker-plate cover, complete with flow control valve. Tested and rated in accorordance with PDI G-101. Concrete shall have 21 MPa(3045 psi) minimum compressive strength in 28 days. See Paragraph GREASE INTERCEPTORS.

All wastewater collected from fixtures in the food Preparation area of the Community Center shall be routed through a grease interceptor.

P-13 FLOOR SINK:

Circular or square, with 300 mm overall width or diameter and 250 nominal overall depth. Acid resistant enamel interior with cast iron body, aluminum sediment bucket and perforated grate of cast iron. Outlet size as indicated on plans.

P-14 DRINKING WATER FOUNTAINS:

Drinking fountains shall meet the requirements of DIN, BS, or EN standards. Non-refrigerated with corrosion resistant bowl with brass fittings and faucets. Bubbler drinking fountains shall have self-closing valves. Self-closing valves shall have automatic stream regulators, flow control capability, a push button actuation or a cross-shaped index metal turn handle without a hood. Spouts shall provide a flow of water at least 100 mm (4 inches) high so as to allow the insertion of a cup or glass under the flow of water. Stops, stream regulators, flow controls, pushbuttons, handles, and traps shall be made of copper zinc alloy. Strainers and drains shall be made of copper zinc alloy or stainless steel.

Surface Wall-Mounted - Surface wall-mounted units size shall be as indicated on the drawings. The bowl shall be made of corrosion-resisting steel. The unit shall have concealed fasteners and be for interior installation.

Provide water fountains where indicated in drawings.

P-15 BATHTUB:

Recessed bathtub, 1.524 m in length, manufacturer's standard width and depth, enameled cast iron.

Drain Assembly - Plug, cup strainer, overflow assembly, washers, couplings, pop-up lever, trip lever, stopper, fittings, etc., shall be brass, cast copper alloy, or wrought copper alloy. See paragraph FIXTURES for optional plastic accessories.

P-16 BREAKROOM SINK:

Stainless steel, splashback, double compartment.

Faucet and Spout - Wall mounted, cast or wrought copper alloy. Faucets shall have replaceable seat and the washer shall rotate onto the seat. Combination faucets with two valves and spouts shall be provided.

Handles - Cast copper alloy, wrought copper alloy, or stainless steel.

P-17 HANDWASH SINK:

Ledge back with holes for faucet and spout single bowl, stainless steel.

Faucet and Spout - Faucets shall be cast or wrought copper alloy.

Handle - Cast copper alloy, wrought copper alloy, or stainless steel. Single lever type.

P-18 KITCHEN PREP SINK:

Stainless steel single compartment.

Faucet and Spout - Wall mounted, cast or wrought copper alloy. Faucets shall have replaceable seat and the washer shall rotate onto the seat. Combination faucets with two valves and spouts shall be provided.

Handles - Cast copper alloy, wrought copper alloy, or stainless steel.

P-19 SCULLERY SINK:

Stainless steel, splashback, double compartment.

Faucet and Spout - Cast or wrought copper alloy. Faucets shall have replaceable seat and the washer shall rotate onto the seat. Combination faucets with two valves and spouts shall be provided. Faucel shall have hose assembly, and movable head.

Handles - Cast copper alloy, wrought copper alloy, or stainless steel, Single lever Control.

P-20 SCULLERY SINK:

Stainless steel, splashback, triple compartment. Drains shall have quick opening valve.

Faucet and Spout - Cast or wrought copper alloy. Faucets shall have replaceable seat and the washer shall rotate onto the seat. Combination faucets with two valves and spouts shall be provided. Faucet shall have hose assembly and movable head.

Handles - Cast copper alloy, wrought copper alloy, or stainless steel, Single lever control.

Drain Assembly - Plug, cup strainer, crossbars, jam nuts, washers, couplings, stopper, etc., shall be copper alloy or stainless steel.

P-21 POT WASH:

Pressure water spray hose for pot washing station.

Faucet and Spout - High Density chrome coated. Faucets shall have replaceable seat and the washer shall rotate onto the seat. Hose for water delivery shall be high pressure and high temperature resistant. Showerhead type nozzle shall have continuous water flow and water volume control.

Handles - Cast copper alloy, wrought copper alloy, or stainless steel.

3.14 PERFORMANCE OF WATER HEATING EQUIPMENT

Standard rating condition terms are as follows:

EF = Energy factor, overall efficiency.

SL = Standby loss in W/0.093 sq. m. based on 27 degrees C delta T, or in percent per hour based on nominal 38 degrees C delta T.

3.14.1 Storage Water Heaters

3.14.1.1 Electric

a. Storage capacity of 454 liters or less, and input rating of 12 kW or less: minimum energy factor (EF) shall be 0.95-0.00132V per 10 CFR 430.

b. Storage capacity of more than 454 liters or input rating more than 12 kW: maximum SL shall be 1.9 w/0.093 sq. m. per ASHRAE 90.1.

3.15 TABLES

TABLE I
PIPE AND FITTING MATERIALS FOR
DRAINAGE, WASTE, AND VENT PIPING SYSTEMS

		SERVICE					
Item #	Pipe and Fitting Materials	A	B	C	D	E	F
20	Polyvinyl Chloride plastic drain, waste and vent pipe and fittings, ASTM D 2665,DIN 8061, DIN 8062, DIN 8063 standards ASTM F 891, (Sch 40) ASTM F 1760 Basis of Design: Pipe by Nepro Plastics, Fittings by Nibco, Charlotte Pipe and Foundry Company, or Nepro Plastics.	X	X	X	X	X	X

SERVICE:
A - Underground Building Soil, Waste and Storm Drain
B - Aboveground Soil, Waste, Drain In Buildings
C - Underground Vent
D - Aboveground Vent
E - Interior Rainwater Conductors Aboveground
F - Corrosive Waste And Vent Above And Belowground
For all listed ASTM standard references, compliance with DIN 8061 or DIN 8062, standard is acceptable.

TABLE II
PIPE AND FITTING MATERIALS FOR PRESSURE PIPING SYSTEMS

Item No.	Pipe and Fitting Materials	SERVICE A	B	C	D
4	Steel pipe: a. Galvanized, ASTM A 53/A 53M, Type S or E, Grade B	X	X		X
	b. Seamless, black, ASTM A 53/A 53M, Type S, Grade B			X	
19	Chlorinated polyvinyl chloride (CPVC) plastic hot and cold water distribution system, ASTM D 2846/D 2846M	X	X		X
20	Chlorinated polyvinyl chloride (CPVC) plastic pipe, Schedule 40 and 80, ASTM F 441/F 441M	X	X		X
23	Socket-type chlorinated polyvinyl chloride (CPVC) plastic pipe fittings, Schedule 40, ASTM F 438 for use with Item 20	X	X		X
25	Polyvinyl chloride (PVC) plastic pipe, Schedules 40, 80, and 120, ASTM D 1785, DIN 8061 or DIN 8062 (16 bars) Basis of Design: Misr Elhegaz Co.	X			X
26	Polyvinyl chloride (PVC) pressure-rated pipe (SDR Series), ASTM D 2241 DIN 8061 or DIN 8062 (16 bars)	X			X
27	Polyvinyl chloride (PVC) plastic pipe fittings, Schedule 40, ASTM D 2466 or DIN 8061 or DIN 8062 (16 bars)	X			X
28	Socket-type polyvinyl chloride (PVC) plastic pipe fittings, schedule 80, ASTM D 2467 for use with Items 26 and 27	X			X
29	Threaded polyvinyl chloride (PVC) plastic pipe fittings, schedule 80, ASTM D 2464	X			X
30	Joints for IPS PVC pipe using solvent cement, ASTM D 2672	X			X
34	Carbon steel pipe unions,	X	X		X

TABLE II
PIPE AND FITTING MATERIALS FOR PRESSURE PIPING SYSTEMS

		SERVICE			
Item No.	Pipe and Fitting Materials	A	B	C	D
	socket-welding and threaded, MSS SP-83				
36	Nipples, pipe threaded ASTM A 733	X	X	X	

A - Cold Water Aboveground
B - Hot Water 82 degree C Maximum Aboveground
C - Compressed Air Lubricated
D - Cold Water Service Belowground
Indicated types are minimum wall thicknesses.
Basis of Design: CPVC & PVC Pipe by Nepro Plastics, CPVC & PVC Fittings by Nibco or Nepro Plastics.
Galvanized Steel pipe by Nova Hut, a.s.
Galvanized steel fittings by Anvil International, Inc.or M.E.G.A.
For all listed ASTM standard references, compliance with DIN 8061or DIN 8062standard is acceptable

-- End of Section --

SECTION 15690

EVAPORATIVE COOLING SYSTEMS

PART 1 GENERAL

1.1 REFERENCES

The publications listed below form a part of this specification to the extent referenced. The publications are referred to within the text by the basic designation only.

AIR MOVEMENT AND CONTROL ASSOCIATION INTERNATIONAL(AMCA)

AMCA 210	(1999) Laboratory Methods of Testing Fans for Aerodynamic Performance Rating

AMERICAN BEARING MANUFACTURERS ASSOCIATION (ABMA)

ABMA 11	(1990; R 1999) Load Ratings and Fatigue Life for Roller Bearings
ABMA 9	(1990; R 2000) Load Ratings and Fatigue Life for Ball Bearings

ASTM INTERNATIONAL (ASTM)

ASTM A 1011/A 1011M	(2006b) Steel, Sheet and Strip, Hot-Rolled, Carbon, Structural, High-Strength Low-Alloy and High-Strength Low-Alloy With Improved Formability, and Ultra-High Strength
ASTM A 123/A 123M	(2002) Zinc (Hot-Dip Galvanized) Coatings on Iron and Steel Products
ASTM A 167	(1999; R 2004) Stainless and Heat-Resisting Chromium-Nickel Steel Plate, Sheet, and Strip
ASTM A 176	(1999; R 2004) Stainless and Heat-Resisting Chromium Steel Plate, Sheet, and Strip
ASTM A 36/A 36M	(2005) Carbon Structural Steel
ASTM A 924/A 924M	(2006) General Requirements for Steel Sheet, Metallic-Coated by the Hot-Dip Process
ASTM B 117	(2003) Operating Salt Spray (Fog) Apparatus
ASTM B 209M	(2006) Aluminum and Aluminum-Alloy Sheet and Plate (Metric)
ASTM B 696	(2000; R 2004e1) Coatings of Cadmium

	Mechanically Deposited
ASTM D 1654	(2005) Evaluation of Painted or Coated Specimens Subjected to Corrosive Environments
ASTM E 2016	(2006) Industrial Woven Wire Cloth

NATIONAL ELECTRICAL MANUFACTURERS ASSOCIATION (NEMA)

NEMA MG 1	(2006) Motors and Generators

THE SOCIETY FOR PROTECTIVE COATINGS (SSPC)

SSPC PS 10.01	(1982; E 2004) Hot-Applied Coal Tar Enamel Painting System
SSPC Paint 16	(1982; E 2004) Coal Tar Epoxy-Polyamide Black (or Dark Red) Paint

UNDERWRITERS LABORATORIES (UL)

UL 507	(1999; Rev thru May 2006) Electric Fans
UL 746C	(2004; Rev thru Feb 2006) Polymeric Materials - Use in Electrical Equipment Evaluations
UL 900	(2004) Air Filter Units
UL 94	(1996; Rev thru Jun 2006) Tests for Flammability of Plastic Materials for Parts in Devices and Appliances

1.2 COORDINATION OF TRADES

Tank supports, piping offsets, fittings, and any other accessories required shall be furnished as required to provide a complete installation and to eliminate interference with other construction.

1.3 DELIVERY AND STORAGE

All equipment delivered and placed in storage shall be stored with protection from the weather, humidity and temperature variations, dirt and dust, or other contaminants.

1.4 FIELD MEASUREMENTS

The Contractor shall become familiar with all details of the work, verify all dimensions in the field, and shall advise the Contracting Officer of any discrepancy before performing the work.

1.5 SUBMITTALS

Government approval is required for submittals with a "G" designation; submittals not having a "G" designation are for information only. When used, a designation following the "G" designation identifies the office that will review the submittal for the Government. The following shall be submitted in accordance with Section 01330 SUBMITTAL PROCEDURES:

SD-02 Shop Drawings

Evaporative Cooling Systems; G TAC
Installation Drawings; G TAC

Drawings consisting of layout of equipment including assembly and installation details and electrical connection diagrams. Drawings shall include any information required to demonstrate that the system has been coordinated and will properly function system as a unit and shall show equipment relationship to other parts of the work, including clearances required for operation and maintenance.

SD-03 Product Data

Equipment; G AED

Manufacturer's catalog data included with the detail drawings for the following items. The data shall be highlighted to show model, size, options, etc., that are intended for consideration. Data shall be adequate to demonstrate compliance with contract requirements for the following:

a. Evaporative coolers

b. Air washers

c. Thermostats

Test Procedures; G AED

Proposed test procedures for performance tests of systems, at least 2 weeks prior to the start of related testing.

Installation; G AED

Proposed diagrams, at least 2 weeks prior to start of related testing. System diagrams that show the layout of equipment, piping, and ductwork, and typed condensed operation manuals explaining preventative maintenance procedures, methods of checking the system for normal, safe operation, and procedures for safely starting and stopping the system shall be framed under glass or laminated plastic. After approval, these items shall be posted where directed.

Manufacturer's Representative; G AED

A letter, at least 2 weeks prior to the start of work, listing the experience and training of the Manufacturer's Representative.

Service Organization; G AED

A letter, at least 2 weeks prior to the start of work, listing the experience and training of the Service Organization.

Performance Tests; G AED

Proposed test schedules for performance tests, at least 2 weeks

prior to the start of related testing.

Training Course; G AED

Proposed schedule for field training submitted at least 2 weeks prior to the start of related training.

SD-06 Test Reports

Testing, Adjusting, and Balancing; G AED

Test reports for the performance tests in booklet form, upon completion of testing. Reports shall document all phases of tests performed including initial test summary, all repairs/adjustments made, and final test results.

SD-07 Certificates

Installation Drawings; G AED

Concurrent with installation drawings, manufacturer's certification of installation drawings.

SD-10 Operation and Maintenance Data

Evaporative Cooling Systems; G AED

Manuals listing step-by-step procedures required for system startup, operation, shutdown, cleaning, and routine maintenance, at least 2 weeks prior to field training. The manuals shall include the manufacturer's name, model number, parts list, list of parts and tools that should be kept in stock by the owner for routine maintenance including the name of a local supplier, simplified wiring and controls diagrams, troubleshooting guide, and Service Organization (including address and telephone number) for each item of equipment.

1.6 QUALIFICATIONS

1.6.1 Manufacturer's Representative

Work specified in this section shall be performed under the supervision of and certified by the Manufacturer's Representative. Certification shall be provided for installation drawings, test procedures, and test results. The Manufacturer's Representative shall have no less than 3 continuous years of experience directly involved in the design and installation of evaporative cooling systems, and shall have served in a similar capacity on no fewer than five projects of similar size and scope during that period.

1.6.2 Service Organization

Work specified in this section shall be performed by a service organization certified by the System Manufacturer. The Service Organization shall have no less than 3 continuous years of experience directly involved in the installation, maintenance, and repair of evaporative cooling systems, and shall have served in a similar capacity on no fewer than five projects of similar size and scope during that period. The Service Organization submitted shall be capable of performing all maintenance and field repairs and providing 4 hour onsite response to a service call on an emergency

basis.

PART 2 PRODUCTS

2.1 STANDARD PRODUCTS

The evaporative cooling systems shall be designed and assembled by a manufacturer regularly engaged in the manufacturing of systems that are of a similar design, workmanship, capacity, and operation. Systems of similar design and capacity shall have been in satisfactory commercial or industrial use for 2 years before bid opening. The 2 years must be satisfactorily completed by a system which has been sold or is offered for sale on the commercial market through advertisements, manufacturers' catalogs, or brochures. Systems having less than a 2-year field service record will be acceptable if a certified record of satisfactory field operation, for not less than 6000 hours exclusive of the manufacturer's factory tests, can be shown. The system shall be supported by a service organization certified by the system manufacturer.

2.2 ASBESTOS PROHIBITION

Asbestos and asbestos-containing products shall not be used.

2.3 NAMEPLATES

All equipment shall have a nameplate that identifies the manufacturer's name, address, type or style, model or serial number, and catalog number.

2.4 SPECIAL TOOLS AND SPARE PARTS

One set of special tools, calibration devices, and instruments required for operation, calibration, and maintenance of the equipment shall be provided. In addition, a two year supply of all spare parts for system operation shall be furnished.

2.5 EQUIPMENT GUARDS AND ACCESS

Belts, pulleys, chains, gears, couplings, projecting setscrews, keys, and other rotating parts exposed to personnel contact shall be fully enclosed or guarded according to OSHA requirements. High temperature equipment and piping exposed to contact by personnel or where it creates a potential fire hazard shall be properly guarded or covered with insulation of a type specified. Catwalks, operating platforms, ladders, and guardrails shall be provided where shown and shall be constructed according to Section 05500 MISCELLANEOUS METAL.

2.6 PIPING COMPONENTS

Piping components shall be as specified in Section 15895 AIR SUPPLY, DISTRIBUTION, VENTILATION, AND EXHAUST SYSTEM.

2.7 AIR SUPPLY, DISTRIBUTION, VENTILATION, AND EXHAUST

All ductwork and related accessories, including air filters and terminal units, shall be as specified in Section 15895 AIR-SUPPLY, DISTRIBUTION, VENTILATION, AND EXHAUST SYSTEM.

2.8 ELECTRICAL WORK

Electrical motor-driven equipment specified shall be provided complete with motor, motor starter, and controls. Unless otherwise specified, electric equipment, including wiring, shall be according to Section 16402 INTERIOR DISTRIBUTION SYSTEM. Electrical characteristics and enclosure type shall be as shown. Use of the manufacturer's standard motor for motors less than 745 W or for single phase motors is acceptable. Motor starters shall be provided complete with thermal overload protection and other appurtenances necessary. Each motor shall be according to NEMA MG 1 and shall be of sufficient size to drive the equipment at the specified capacity without exceeding the nameplate rating of the motor. Manual or automatic control and protective or signal devices required for the operation specified, and any control wiring required for controls and devices, but not shown, shall be provided. Where two-speed or variable-speed motors are indicated, solid-state variable-speed controller may be provided to accomplish the same function. Solid-state variable-speed controllers shall be utilized for 0.745 kW through 7.45 kW (fractional hp through 10 hp) ratings. Adjustable frequency drives shall be used for larger motors.

2.9 MISCELLANEOUS MATERIALS

Materials shall conform to the following:

2.9.1 Aluminum Sheets

ASTM B 209M , Alloy 3003, temper H14.

2.9.2 Steel Sheets, Galvanized

ASTM A 924/A 924M, commercial quality.

2.9.3 Steel Sheets, Uncoated

ASTM A 1011/A 1011M, hot-rolled, commercial quality.

2.9.4 Structural Steel

ASTM A 36/A 36M.

2.9.5 Stainless Steel

ASTM A 167 and ASTM A 176.

2.9.6 Structural Polymeric Components

Components made of structural polymeric materials shall meet the applicable requirements of UL 746C.

2.9.7 Nonstructural Polymeric Components

Components not made of structural polymeric materials shall meet or exceed the requirements of UL 94 for Classifying Materials 94HB.

2.10 EVAPORATIVE COOLERS

Units shall be a self-contained direct, weather resistant drip type, draw through and shall conform to UL 507 and UL 746C. Unit shall be the side or vertical downblast discharge type as indicated. A guillotine type manual

winterizing damper complete with holding rack shall be provided on the discharge side of each unit. Holding rack shall retain damper during operating season.

2.10.1 Fan Unit

The unit shall be the centrifugal type and shall be complete with motor, drive equipment, and vibration-isolation supports between motor and fan housing. Water distributor or rotary wheel motor shall be synchronized to start and stop with the fan unit. Manual or automatic reset type thermal overload protection shall be provided in the starter or shall be integral with the motor. Motor starters shall be manual across-the-line type with weather resistant enclosure. Fan scroll and wheel shall be constructed of galvanized steel, aluminum, stainless steel, or polymeric material with stainless steel, hot-dip zinc coated steel or cadmium coated steel shaft. Fan scroll may be made of a different material than the wheel. Bearings shall be sleeve type, self-aligning and self-oiling with oil reservoirs, or precision self-aligning roller or ball-type with accessible grease fittings or permanently lubricated type. Grease fittings shall be connected to tubing and serviceable from a single accessible point. Bearing life shall be L50 rated at not less than 200,000 hours as defined by ABMA 9 and ABMA 11.

2.10.1.1 Fan Rating

Evaporative cooler fans shall have air delivery ratings based on AMCA 210 tests by an AMCA approved laboratory.

2.10.1.2 Retarding Agent

An ultraviolet retarding agent such as additives, gel coatings or other manufacturer approved equivalents shall be part of or applied on exterior nonmetallic components susceptible to ultraviolet degradation from sun rays and shall conform to UL 746C.

2.10.2 Evaporative Media

2.10.2.1 Evaporative and Eliminator Media for Drip Type Units

Media shall be fabricated of refined cellulose matrix, bonded synthetic fiber, glass fiber, or nonferrous metal. Media shall conform to UL 900 Class II. Media shall be of the type specifically manufactured for use with evaporative coolers. Nonferrous metal media shall be constructed of corrosion and fungus resistant material not susceptible to decomposition by fungal or bacterial action. Media shall be securely mounted in a galvanized steel, stainless steel, or polymeric material frame. Louvers shall be positioned in such manner that the water will not run on the outside surface. Nonrigid filter media shall be held in frame by a rigid retainer grid, a 6 mm (1/4 inch) wire mesh or fabric netting.

2.10.3 Water Handling Equipment

2.10.3.1 Water Handling Equipment for Drip Coolers

Water handling equipment shall thoroughly wet and continuously flush evaporative surfaces of the media material. The water distribution system shall be designed, to provide equal flow of water directly to the pads or to each trough. Troughs, if used, shall be adjustable hot-dip galvanized steel, stainless steel, or polymeric and suitably designed in a manner that will effectively regulate the flow of water to the media pad to obtain even

and complete saturation. Troughs shall be adjustable for leveling or sectionalized and each section supplied with water by means of an individual tube. The water pump shall be a centrifugal type with capacity and head characteristics for the specified operation of the unit and shall be provided with a low water safety shut-off. The motor shaft shall be constructed of stainless steel, hot-dip galvanized steel or cadmium coated steel. The impeller shall be constructed of stainless steel or polymeric material conforming to UL 746C. Pump housing shall be constructed of hot-dip zinc coated steel, brass, or polymeric material conforming to UL 746C. Pump housing bottom shall be removable for impeller cleaning and shall not permit galvanic action with cooler bottom. Pump shall have permanently sealed and lubricated bearings and fan cooled motor with moisture proof winding. Pump motor shall be provided with a factory installed three conductor rubber sheathed flexible cord with the third wire being the grounding conductor. Water pump shall be provided with a filter screen constructed of plastic or bronze.

2.10.3.2 Water Handling Equipment for Slinger Coolers

Water distribution to the evaporative pad shall be accomplished by a motor driven water slinger to uniformly distribute water to the pad.

2.10.3.3 Water Blowdown Equipment

Water shall be periodically dumped (approximately every six to twelve hours). This shall be done by either the use of a mechanical timer or by measuring the conductivity and dumping the water when the conductivity reaches 1500-2000 micro mhos.

2.11 AIR WASHERS

Air washers shall be furnished as a factory package unit, complete with fan unit, spray pump, nozzles, piping, evaporative cells, washdown cycle and eliminators. Air washers shall be spray type or sprayed cell type. A guillotine type manual winterizing damper complete with holding rack shall be provided on the discharge side of each unit. Holding rack shall retain damper during operating season.

2.11.1 Fan Unit

The unit shall be the centrifugal type and shall be complete with motor, drive equipment, and vibration-isolation supports between motor and fan housing. Spray pump shall be synchronized to start and stop with fan unit or on a timed cycle which allows the evaporative cells to be wetted prior to fan start. Manual reset type thermal overload protection shall be provided in the starter or shall be integral with the motor. The motor enclosure shall be dripproof totally enclosed type. Motor starters shall be manual across-the-line type with weather resistant enclosure. Fans and motors shall be provided with vibration isolation supports or mountings. Fan scroll and wheel shall be constructed of galvanized steel, aluminum, stainless steel or polymeric material with a stainless steel, hot-dip zinc coated steel, or cadmium coated steel shaft. Fan scroll may be made of a different material than the wheel. Fans shall have air delivery ratings based on tests by an AMCA approved laboratory to the AMCA 210.

2.11.2 Water-Handling Equipment

One or more banks of spray nozzles, flooding nozzles, water piping, spray pump, and strainers constitute water handling equipment. The number of

banks of spray nozzles shall be as required to produce the specified efficiency. Spray nozzles shall be self-cleaning, centrifugal type, constructed of brass, and provided with removable caps for cleaning. Flooding nozzles shall be constructed of machined brass or low pressure PVC nozzles. The spray pumps shall be centrifugal type with capacity and static pressure required for the spray equipment provided. Pump motor shall be a totally enclosed type suitable for the available electric service and provided with the thermal overload protection. Motor starter shall be manual across-the-line type with weather resistant enclosure. Unless otherwise indicated, all piping materials and installations shall be in conformance with Section 15400 PLUMBING, GENERAL PURPOSE.

2.11.3 Evaporative Cells

Cells shall consist of galvanized steel, stainless steel or polymeric material frames packed with glass fiber, bonded synthetic fiber or nonferrous metal screens, arranged in tiers. Media shall be of the type specifically manufactured for the use with air washers. Nonferrous metal media shall be constructed of corrosion and fungus resistant material not susceptible to decomposition by fungal or bacterial action. Each tier shall be independent of the others and shall have a separate spray header, drain sheet and drain conduit to the tank below.

2.11.4 Eliminator

Eliminators shall consist of vertical plates having a series of bends presenting a large surface area against which the water drops impinge and return down to the tank. Eliminator plates shall be constructed of galvanized steel or polymeric material and shall be positioned at both top and bottom. The eliminators shall be designed to prevent water carryover.

2.12 WATER TANKS

Water tanks shall be constructed of stainless steel, polymeric material, or minimum G90 galvanized steel and welds shall be coated with zinc-rich paint. The tank shall be provided with a means for drainage, a makeup connection, a float-operated valve, an overflow connection and, when required, a recirculating pump suction connection. The float valve shall be designed for a water working pressure of 862 kPa (125 psi) and both valve stems and seat disks shall be constructed of brass or other approved corrosion resisting material. Continuous bleed-off assembly or automatic flush system shall be provided. This system shall be adjustable to limit the concentrations from three to ten times the incoming water concentration.

2.13 CABINETS

Galvanized steel sheets, stainless steel or polymeric material shall be used in the construction of cabinets. Outside air inlets shall be protected with bird screens that conform to ASTM E 2016, Type I, Class 1, 2 by 2 mesh, 1.6 mm diameter aluminum wire or 0.8 mm diameter stainless steel wire. Cabinets shall provide access to all moving parts including fans, pumps, and float valves.

2.13.1 Metal Cabinets

Where possible, cabinets shall be factory assembled by either welded or bolted and screwed construction. Cabinets shall be braced and reinforced. Bolts, screws, hinges, trim, and other metal appurtenances shall be cadmium plated or galvanized in accordance with ASTM B 696 or ASTM A 123/A 123M.

When it is necessary to ship the unit disassembled, the cabinet sections shall be designed for assembly with cadmium plated or galvanized bolts. The interior and exterior of the galvanized steel cabinet, including hinges, handles, and other trim, shall be cleaned and chemically treated to assure paint adhesion. The interior bottom of cabinet shall be factory coated with coal tar based enamel or epoxy and shall meet the requirements of SSPC PS 10.01 or SSPC Paint 16. Galvanized surfaces damaged during fabrication or handling shall be given a coat of zinc-rich paint. Finish shall be as specified in paragraph PAINTING AND FINISHING. Gauge of cabinet components shall be as indicated in TABLES I and II.

TABLE I. STEEL CABINET (MINIMUM THICKNESS mm)

Component part of cooler	Nominal Size of Industry Standard Air Rating 0/1650 L/s	1651/2600 L/s	2601/0 L/s	3301/7500 L/s
Water tank	0.85	0.85	1.0	1.3
Corner posts	0.75	0.75	0.75	1.0
Sides	0.85	0.85	0.85	0.85
Louver pad holder	0.5	0.5	0.5	0.5
Blower scroll	0.75	0.85	1.0	1.0
Blower wheel	0.85	0.85	0.85	1.0
Drip trough	0.5	0.55	0.55	0.55
Top	0.85	0.85	1.0	1.0

TABLE II. STAINLESS STEEL CABINET (MINIMUM THICKNESS mm)

Component part	Nominal Size of Industry Standard Air Rating 0/2100 L/s	02101/3050 L/s	Beyond 3050 L/s
Corner posts	0.65	0.65	*
Bottom pan	0.8	0.95	*
Top pan	0.8	0.95	*

* In accordance with manufacturer's standards.

2.13.2 Polymeric Material Cabinets

Unit cabinets shall be constructed of polymeric materials, such as fiberglass or polypropylene and shall meet the requirements of UL 746C, Figure 12.1.

2.14 PREVENTION OF GALVANIC CORROSION

Materials that will be exposed to water during operation of the unit shall be such that galvanic action will not occur in the normal operation of the

equipment. The interior of water tank and cabinet and the exterior of the fan housing shall be finished with an enamel paint coat or epoxy coating. There will be no evidence of holidays and particular attention will be given to sealing joints. Media retainer will not be coated. This paragraph does not apply to nonmetallic materials or the interior water tank and cabinet of stainless steel materials.

2.15 CONTROLS

Controls shall be as specified in Section 15950 HVAC CONTROL SYSTEMS.

2.16 THERMOSTATS

Thermostats shall be line voltage heavy duty type 115 volt ac and shall have an electrical rating greater than the cooler being controlled or shall be low voltage type. Thermostats shall have a range of 7 to 29 degrees C (45 to 85 degrees F) with 1 degree C differential range. Thermostats shall be UL listed and shall have an indicator and a transparent cover with lock.

PART 3 EXECUTION

3.1 INSTALLATION

All equipment shall be installed as shown and in accordance with the manufacturer's diagrams and recommendations except where otherwise indicated. Units shall be connected to the building's water supply system. Piping installation shall be as specified in Section 15895 AIR SUPPLY, DISTRIBUTION, VENTILATION, AND EXHAUST SYSTEM. A globe or gate valve and union shall be installed in the water supply line adjacent to each unit. Valves shall not be installed with stems below the horizontal. All supply piping shall be sloped to drain to the indicated stop and waste valve.

3.2 AIR-SUPPLY AND DISTRIBUTION SYSTEM

Equipment, sheet metal work, air filters, and terminal units shall be installed as specified in Section 15895 AIR SUPPLY, DISTRIBUTION, VENTILATION, AND EXHAUST SYSTEM.

3.3 PAINTING AND FINISHING

3.3.1 Factory Coating

Equipment and component items, when fabricated from ferrous metal, shall be factory finished with the manufacturer's standard finish except that all components inside and outside of the evaporative cooling unit shall have weather resistant finishes that will withstand 500 hours of exposure to the salt spray test specified in ASTM B 117 and ASTM D 1654 using a 5 percent sodium chloride solution. Immediately after completion of the test, the specimen shall show no signs of blistering, wrinkling, cracking, or loss of adhesion, and no sign of rust creepage beyond 3 mm on either side of the scratch mark. Upon request of the Contracting Officer, results of the test will be submitted by the manufacturer.

3.3.2 Field Painting

Painting of surfaces not otherwise specified, including nonferrous metals, finish painting of items only primed at the factory, and field repair of factory finish, is specified in Section 09 90 00 PAINTING, GENERAL.

3.4 CLEANING

Ducts, plenums, and casings shall be thoroughly cleaned of all debris and blown free of all small particles of rubbish and dust before installing outlet faces. Equipment shall be wiped clean, with all traces of oil dust, dirt, or paint spots removed. Temporary filters shall be provided for all fans that are operated during construction, and after all construction dirt has been removed from the building, new filters shall be installed. Bearings shall be properly lubricated with oil or grease as recommended by the manufacturer.

3.5 TESTING, ADJUSTING, AND BALANCING

Testing, adjusting, and balancing shall be as specified in Section 15990 TESTING, ADJUSTING, AND BALANCING OF HVAC SYSTEMS.

3.6 PERFORMANCE TESTS

After testing, adjusting, and balancing has been completed as specified, the system shall be tested as a whole to see that all items perform as integral parts of the system and that operation is as specified. Corrections and adjustments shall be made as necessary to produce the conditions indicated or specified. Capacity tests and general operating tests shall be conducted by the Manufacturer's Representative. Tests shall cover a period of not less than 7 days and shall demonstrate that the entire system is functioning according to the specifications. Ambient air temperature and supply air temperature and quantity readings shall be made at hourly intervals for the duration of the time period.

3.7 TRAINING COURSE

The Contractor shall conduct a training course for operating staff as designated by the Contracting Officer. The training period, for a total of 24 hours of normal working time, shall start after the system is functionally completed but prior to final acceptance tests. The field instructions shall cover all of the items contained in the approved operation and maintenance instructions.

-- End of Section --

SECTION 15700

UNITARY HEATING AND COOLING EQUIPMENT

PART 1 GENERAL

1.1 REFERENCES

The publications listed below form a part of this specification to the extent referenced. The publications are referred to within the text by the basic designation only.

AIR-CONDITIONING AND REFRIGERATION INSTITUTE (ARI)

ARI 210/240	(2003) Unitary Air-Conditioning and Air-Source Heat Pump Equipment
ARI 460	(2000) Remote Mechanical-Draft Air-Cooled Refrigerant Condensers
ARI 700	(2004) Specifications for Fluorocarbon and Other Refrigerants

ASTM INTERNATIONAL (ASTM)

ASTM E 84	(2004) Surface Burning Characteristics of Building Materials
ASTM F 872	(1984; R 1990) Filter Units, Air Conditioning: Viscous-Impingement Type, Cleanable
ASTM B 280	(2003) Seamless Copper Tube for Air Conditioning and Refrigeration Field Service

AMERICAN SOCIETY OF HEATING, REFRIGERATING AND AIR-CONDITIONING ENGINEERS (ASHRAE)

ASHRAE 15	(2001; Errata 2002) Safety Standard for Refrigeration Systems
ASHRAE 34	(2001; Errata 2002) Designation and Safety Classification of Refrigerants
ASHRAE 90.1	(2001; various Errata) Energy Standard for Buildings Except Low-Rise Residential Buildings

AMERICAN WELDING SOCIETY (AWS)

AWS Z49.1	(1999) Safety in Welding and Cutting
AWS A5.8	(1992) Filler Metals for Brazing and Braze Welding

ASME INTERNATIONAL (ASME)

ASME B31.5	(2001) Refrigeration Piping and Heat Transfer Components
ASME BPVC SEC IX	(2001) Boiler and Pressure Vessel Code; Section IX, Welding and Brazing Qualifications
ASME BPVC SEC VIII D1	(2001) Boiler and Pressure Vessel Code; Section VIII, Pressure Vessels Division 1 - Basic Coverage

NATIONAL ELECTRICAL MANUFACTURERS ASSOCIATION (NEMA)

NEMA ICS 6	(1993; R 2001) Industrial Control and Systems, Enclosures
NEMA MG 1	(2003; R 2004) Motors and Generators

NATIONAL FIRE PROTECTION ASSOCIATION (NFPA)

NFPA 70	(2005) National Electrical Code

UNDERWRITERS LABORATORIES (UL)

UL 207	(2001) Refrigerant-Containing Components and Accessories, Nonelectrical

1.2 SUBMITTALS

Government approval is required for submittals with a "G" designation; submittals not having a "G" designation are for information only. When used, a designation following the "G" designation identifies the office that will review the submittal for the Government. Submit the following in accordance with Section 01330 SUBMITTAL PROCEDURES:

SD-03 Product Data

Unitary Equipment

Manufacturer's standard catalog data, at least 5 weeks prior to the purchase or installation of a particular component, highlighted to show material, size, options, performance charts and curves, etc. in adequate detail to demonstrate compliance with contract requirements. Data shall include manufacturer's recommended installation instructions and procedures. If vibration isolation is specified for a unit, vibration isolator literature shall be included containing catalog cuts and certification that the isolation characteristics of the isolators provided meet the manufacturer's recommendations. Data shall be submitted for each specified component.

SD-06 Test Reports

REFRIGERANT TESTS, CHARGING, AND START-UP

Two copies of each test containing the information described below.

a. The date the tests were performed.
b. A list of equipment used, with calibration certifications.
c. Initial test summaries.
d. Repairs/adjustments performed.
e. Final test results.

SYSTEM PERFORMANCE TESTS

Two copies of the report provided in bound booklets. The report shall document compliance with the specified performance criteria upon completion and testing of the system. The report shall indicate the number of days covered by the tests and any conclusions as to the adequacy of the system. The report shall also include the following information and shall be taken at least three different times at outside dry-bulb temperatures that are at least 3 degrees C apart:

a. Date and outside weather conditions.
b. The load on the system based on the following:

(1) The refrigerant used in the system.
(2) Condensing temperature and pressure.
(3) Suction temperature and pressure.
(4) Ambient, condensing and coolant temperatures.
(5) Running current, voltage and proper phase sequence for each phase of all motors.

c. The actual on-site setting of operating and safety controls.
d. Thermostatic expansion valve superheat - value as determined by field test.
e. Subcooling.
f. High and low refrigerant temperature switch set-points
g. Low oil pressure switch set-point.
h. Defrost system timer and thermostat set-points.
i. Capacity control set-points.
j. Field data and adjustments which affect unit performance and energy consumption.

l. Field adjustments and settings which were not permanently marked as an integral part of a device.

SD-10 Operation and Maintenance Data

Operation Manuals

Provide complete copies of an operation manual in bound booklets listing step-by-step procedures required for system startup, operation, abnormal shutdown, emergency shutdown, and normal shutdown prior to the first training course. The booklets shall include the manufacturer's name, model number, and parts list. The manuals shall include the manufacturer's name, model number, service manual, and a brief description of all equipment and their basic operating features.

Maintenance Manuals

Provide complete copies of maintenance manual in bound booklets listing routine maintenance procedures, possible breakdowns and

repairs, and a trouble shooting guide. The manuals shall include piping and equipment layouts and simplified wiring and control diagrams of the system as installed.

Operation and Maintenance Manuals shall be as required in Section 01060: SPECIAL CLAUSE entitled OPERATION AND MAINTENANCE (O&M) DATA FOR EQUIPMENT AND SYSTEMS, and include the additional requirements as specified hereinafter. In the event of a conflict, the more detailed requirement shall apply.

1.3 SAFETY REQUIREMENTS

Exposed moving parts, parts that produce high operating temperature, parts which may be electrically energized, and parts that may be a hazard to operating personnel shall be insulated, fully enclosed, guarded, or fitted with other types of safety devices. Safety devices shall be installed so that proper operation of equipment is not impaired. Welding and cutting safety requirements shall be in accordance with AWS Z49.1.

1.4 DELIVERY, STORAGE, AND HANDLING

Stored items shall be protected from the weather, humidity and temperature variations, dirt and dust, or other contaminants. Proper protection and care of all material both before and during installation shall be the Contractor's responsibility. Any materials found to be damaged shall be replaced at the Contractor's expense. During installation, piping and similar openings shall be capped to keep out dirt and other foreign matter.

1.5 PROJECT/SITE CONDITIONS

1.5.1 Drawings

Because of the small scale of the drawings, it is not possible to indicate all offsets, fittings, and accessories that may be required. The Contractor shall carefully investigate the plumbing, fire protection, electrical, structural and finish conditions that would affect the work to be performed and arrange such work accordingly, furnishing required offsets, fittings, and accessories to meet such conditions.

1.6 REFRIGERANTS

Refrigerants shall have an Ozone Depletion Factor (ODF) of 0.05 or less. The ODF shall be in accordance with the "Montreal Protocol On Substances That Deplete The Ozone Layer," September 1987, sponsored by the United Nations Environment Programme. CFCs and HCFCs shall not be permitted. Refrigerant shall be an approved alternative refrigerant per EPA's Significant New Alternative Policy (SNAP) listing.

PART 2 PRODUCTS

2.1 STANDARD COMMERCIAL PRODUCTS

Materials and equipment shall be standard products of a manufacturer regularly engaged in the manufacturing of such products, which are of a similar material, design and workmanship. The standard products shall have been in satisfactory commercial or industrial use for 2 years prior to bid opening. The 2 year use shall include applications of equipment and materials under similar circumstances and of similar size. The 2 years experience shall be satisfactorily completed by a product which has been

sold or is offered for sale on the commercial market through advertisements, manufacturer's catalogs, or brochures. Products having less than a 2 year field service record shall be acceptable if a certified record of satisfactory field operation, for not less than 6000 hours exclusive of the manufacturer's factory tests, can be shown. All materials shall be according to United States standards. System components shall be environmentally suitable for the indicated locations.

2.2 NAMEPLATES

Major equipment including compressors, condensers, receivers, heat exchanges, fans, and motors shall have the manufacturer's name, address, type or style, model or serial number, and catalog number on a plate secured to the item of equipment. Plates shall be durable and legible throughout equipment life. Plates shall be fixed in prominent locations with nonferrous screws or bolts.

2.3 ELECTRICAL WORK

Electrical equipment, motors, motor efficiencies, and wiring shall be in accordance with Section 16402 INTERIOR DISTRIBUTION SYSTEM. Electrical motor driven equipment specified shall be provided complete with motors, motor starters, and controls. Electrical characteristics shall be as shown, and unless otherwise indicated, all motors of 746 kW (1 hp) and above with open, dripproof, totally enclosed, or explosion proof fan cooled enclosures, shall be high efficiency type. Field wiring shall be in accordance with manufacturer's instructions. Each motor shall conform to NEMA MG 1 and NEMA MG 2 and be of sufficient size to drive the equipment at the specified capacity without exceeding the nameplate rating of the motor. Motors shall be continuous duty with the enclosure specified. Motor starters shall be provided complete with thermal overload protection and other appurtenances necessary for the motor control indicated. Motors shall be furnished with a magnetic across-the-line or reduced voltage type starter as required by the manufacturer. Motor duty requirements shall allow for maximum frequency start-stop operation and minimum encountered interval between start and stop. Motors shall be sized for the applicable loads. Motor torque shall be capable of accelerating the connected load within 20 seconds with 80 percent of the rated voltage maintained at motor terminals during one starting period. Motor bearings shall be fitted with grease supply fittings and grease relief to outside of enclosure. Manual or automatic control and protective or signal devices required for the operation specified and any control wiring required for controls and devices specified, but not shown, shall be provided.

2.4 UNITARY EQUIPMENT, ROOM UNIT

Unit shall be an air-cooled, split system which employs a remote condensing unit, a separate indoor unit, and interconnecting refrigerant piping. Unit shall be the heat pump type. Unit shall be provided with necessary fans, air filters, and liquid receiver. Ductless split evaporator shall be heat pump duty either wall or ceiling mounted, as noted on plans, with integral supply and return grilles and discharge drain pans with drain connection. Ductless unit shall have fan directly driven by multispeed, filters electric motor and shall have cleanable filters.

2.5 UNITARY EQUIPMENT, SPLIT SYSTEM

Unit shall be an air-cooled, split system which employs a remote condensing unit, a separate indoor unit, and interconnecting refrigerant piping.

Unitshall be the heat pump type conforming to applicable Underwriters Laboratories (UL) standards including UL 1995. Unit shall be rated in accordance with ARI 210/240. Unit shall be provided with necessary fans, air filters, coil frost protection, liquid receiver, internal dampers, supplemental heat, and cabinet construction as specified in paragraph " Unitary Equipment Components". The remote unit shall be as specified in paragraph REMOTE CONDENSER OR CONDENSING UNIT.

2.5.1 Air-to-Refrigerant Coil

Coils shall have copper tubes of 10 mm minimum diameter with copper or aluminum fins that are mechanically bonded or soldered to the tubes. Casing shall be galvanized steel or aluminum. Contact of dissimilar metals shall be avoided. Coils shall be tested in accordance with ASHRAE 15 at the factory and be suitable for the working pressure of the installed system. Each coil shall be dehydrated and sealed after testing and prior to evaluation and charging. Each unit shall be provided with a factory operating charge of refrigerant and oil or a holding charge. Unit shipped with a holding charge shall be field charged. Separate expansion devices shall be provided for each compressor circuit.

2.5.2 Refrigeration Circuit

Refrigerant-containing components shall comply with ASHRAE 15 and be factory tested, cleaned, dehydrated, charged, and sealed. Refrigerant charging valves and connections, and pumpdown valves shall be provided for each circuit. Filter-drier shall be provided in each liquid line and be reversible-flow type.

2.5.3 Unit Controls

Unit shall be internally prewired with a low volt control circuit powered by an internal transformer. Terminal blocks shall be provided for power wiring and external control wiring. Unit shall have cutoffs for high and low pressure, and low oil pressure for compressors with positive displacement oil pumps. Adjustable-cycle timers shall prevent short-cycling. Multiple compressors shall be staged by means of a time delay. Unit shall be internally protected by fuses or a circuit breaker in accordance with UL 1995. Low cost cooling shall be made possible by means of a control circuit which will modulate dampers to provide 100 percent outside air while locking out compressors.

2.5.4 Remote Condenser Or Condensing Unit

Each remote condenser coil shall be fitted with a manual isolation valve and an access valve on the coil side. Saturated refrigerant condensing temperature shall not exceed 49 degrees C at 40 degrees C ambient. Fan and condenser motors shall have dripproof enclosures.

2.5.4.1 Air-Cooled Condenser

Unit shall be rated in accordance with ARI 460 and conform to the requirements of UL 1995. Unit shall be factory fabricated, tested, packaged, and self-contained. Unit shall be complete with casing, propeller or centrifugal type fans, heat rejection coils, connecting piping and wiring, and all necessary appurtenances.

2.5.4.2 Connections

Interconnecting refrigeration piping, electrical power, and control wiring between the condensing unit and the indoor unit shall be provided as required and as indicated. Electrical and refrigeration piping terminal connections between condensing unit and evaporator units shall be provided.

2.5.4.3 Condensing Coil

Coils shall have copper tubes of 10 mm minimum diameter with copper or aluminum fins that are mechanically bonded or soldered to the tubes. Casing shall be galvanized steel or aluminum. Contact of dissimilar metals shall be avoided. Coils shall be tested in accordance with ASHRAE 15 at the factory and be suitable for the working pressure of the installed system. Each coil shall be dehydrated and sealed after testing and prior to evaluation and charging. Each unit shall be provided with a factory operating charge of refrigerant and oil or a holding charge. Unit shipped with a holding charge shall be field charged. Separate expansion devices shall be provided for each compressor circuit.

2.5.4.4 Unit Controls

The control system shall be complete with required accessories for regulating condenser pressure by fan cycling, modulating condenser coil or fan dampers, flooding the condenser, or a combination of the above. Unit mounted control panels or enclosures shall be constructed in accordance with applicable requirements of NFPA 70 and housed in NEMA ICS 6, Class 1 or 3A enclosures. Controls shall include control transformer, time delay start-up, overload protective devices, interface with local and remote components, and intercomponent wiring to terminal block points.

2.5.4.5 Compressor

Unit shall be rated in accordance with ARI 500. Compressor shall be direct drive, semi-hermetic or hermetic reciprocating, or scroll type capable of operating at partial load conditions. Compressor shall be capable of continuous operation down to the lowest step of unloading as specified. Units 35 kW and larger shall be provided with capacity reduction devices to produce automatic capacity reduction of at least 50 percent. If standard with the manufacturer, two or more compressors may be used in lieu of a single compressor with unloading capabilities, in which case the compressors will operate in sequence, and each compressor shall have an independent refrigeration circuit through the condenser and evaporator. Each compressor shall start in the unloaded position. Each compressor shall be provided with vibration isolators, crankcase heater, thermal overloads, and high pressure safety cutoffs and protection against short cycling.

2.6 EQUIPMENT EFFICIENCY

Minimum energy efficiency shall be in accordance with ASHRAE 90.1.

2.7 UNITARY EQUIPMENT COMPONENTS

Minimum energy efficiency shall be in accordance with ASHRAE 90.1.

2.7.1 Refrigerant and Oil

Refrigerant shall be one of the fluorocarbon gases. Refrigerants shall

have number designations and safety classifications in accordance with ASHRAE 34. Refrigerants shall meet the requirements of ARI 700 as a minimum. Contractor shall provide and install a complete charge of refrigerant for the installed system as recommended by the manufacturer. Except for factory sealed units, two complete charges of lubricating oil for each compressor crankcase shall be furnished. One charge shall be used during the system performance testing period. Following the satisfactory completion of the performance testing, the oil shall be drained and replaced with a second charge. Lubricating oil shall be of a type and grade recommended by the manufacturer for each compressor. Where color leak indicator dye is incorporated, charge shall be in accordance with manufacturer's recommendation.

2.7.2 Fans

Fan wheel shafts shall be supported by either maintenance-accessible lubricated antifriction block-type bearings, or permanently lubricated ball bearings. Unit fans shall be selected to produce the cfm required at the fan total pressure. Motor starters, if applicable, shall be magnetic across-the-line type with a dripproof enclosure. Thermal overload protection shall be of the manual or automatic-reset type. Fan wheels or propellers shall be constructed of aluminum or galvanized steel. Centrifugal fan wheel housings shall be of galvanized steel, and both centrifugal and propeller fan casings shall be constructed of aluminum or galvanized steel. Fan wheels or propellers shall be statically and dynamically balanced. Belt-driven fans shall have adjustable sheaves to provide not less than 20 percent fan-speed adjustment. The sheave size shall be selected so that the fan speed at the approximate midpoint of the sheave adjustment will produce the specified air quantity. Each drive will be independent of any other drive. Propeller fans shall be direct-drive drive type with fixed pitch blades. V-belt driven fans shall be mounted on a corrosion protected drive shaft supported by either maintenance-accessible lubricated antifriction block-type bearings, or permanently lubricated ball bearings. Each drive will be independent of any other drive. Drive bearings shall be protected with water slingers or shields. V-belt drives shall be fitted with guards where exposed to contact by personnel and adjustable pitch sheaves.

2.7.3 Primary/Supplemental Heating

2.7.3.1 Electric Heating Coil

Coil shall be duct- or unit-mounted. Coil shall be provided with a built-in or surface-mounted high-limit thermostat interlocked electrically so that the coil cannot be energized unless the fan is energized. Coil casing and support brackets shall be of galvanized steel or aluminum. Coil shall be mounted to eliminate noise from expansion and contraction and be completely accessible for service.

2.7.4 Air Filters

Air filters shall be as herein after specified.

2.7.4.1 Extended Surface Pleated Panel Filters

Filters shall be 50 mm (2 inch) depth sectional type of the size indicated and shall have an average efficiency of 25 to 30 percent when tested in accordance with DIN, I.E.C., BS, or EN standards. Media shall be nonwoven cotton and synthetic fiber mat. A wire support grid bonded to the media

shall be attached to a moisture resistant fiberboard frame. Four edges of the filter media shall be bonded to the inside of the frame to prevent air bypass and increase rigidity.

2.7.4.2 Replaceable Media Filters

Replaceable media filters shall be the dry-media type, of the size required to suit the application. Filtering media shall be not less than 25 mm (1 inches) thick fibrous glass media pad supported by a structural wire grid or woven wire mesh. Pad shall be enclosed in a holding frame of not less than 1.6 mm (16 gauge) galvanized steel, and equipped with quick-opening mechanism for changing filter media.

2.7.4.3 Sectional Cleanable Filters

Cleanable filters shall conform to ASTM F 872 and be 25 mm thick. Viscous adhesive shall be provided in 18.9 L (5 gallon) containers in sufficient quantity for 12 cleaning operations and not less than 1 L (one quart) for each filter section. Initial pressure drop for clean filters shall not exceed the applicable values listed in ASTM F 872.

2.7.5 Pressure Vessels

Pressure vessels shall conform to ASME BPVC SEC VIII D1 or UL 207, as applicable for maximum and minimum pressure or temperature encountered. Where referenced publications do not apply, pressure components shall be tested at 1-1/2 times design working pressure. Refrigerant wetted carbon steel surfaces shall be pickled or abrasive blasted free of mill scale, cleaned, dried, charged, and sealed.

2.7.6 Internal Dampers

Dampers shall be parallel blade type with renewable blade seals and be integral to the unitary unit. Damper provisions shall be provided for each outside air intake, exhaust, economizer, and mixing boxes. Dampers shall operate as specified.

2.7.7 Mixing Boxes

Mixing boxes shall match the base unit in physical size and shall include equally-sized flanged openings, each capable of full air flow. Arrangement shall be as indicated.

2.7.8 Cabinet Construction

Casings for the specified unitary equipment shall be constructed of galvanized steel or aluminum sheet metal and galvanized or aluminum structural members. Casing shall be fitted with lifting provisions, access panels or doors, fan vibration isolators, electrical control panel, corrosion-resistant components, structural support members, insulated condensate drip pan and drain, and internal insulation in the cold section of the casing. Provisions to permit replacement of major unit components shall be incorporated. Penetrations of cabinet surfaces, including the floor, shall be sealed. Unit shall be fitted with a drain pan which extends under all areas where water may accumulate. Extent and effectiveness of the insulation of unit air containment surfaces shall prevent, within limits of the specified insulation, heat transfer between the unit exterior and ambient air, heat transfer between the two conditioned air streams, and condensation on surfaces. Paint and finishes shall comply with the

requirements specified in paragraph FACTORY COATING.

2.7.8.1 Outdoor Cabinet

Outdoor cabinets shall be suitable for outdoor service with a weathertight, insulated and corrosion-protected structure. Cabinets constructed exclusively for indoor service which have been modified for outdoor service are not acceptable.

2.8 ACCESSORIES

2.8.1 Refrigerant Relief Valve/Rupture Disc Assembly

The assembly shall be a combination pressure relief valve and rupture disc designed for refrigerant usage. The assembly shall be in accordance with ASME BPVC SEC VIII D1 and ASHRAE 15. The assembly shall be provided with a pressure gauge assembly which will provide local indication if a rupture disc is broken. Rupture disc shall be the non-fragmenting type.

2.8.2 Bolts and Nuts

Bolts and nuts shall be in accordance with manufacturer's recommendations. The bolt head shall be marked to identify the manufacturer and the standard with which the bolt complies.

2.8.3 Bird Screen

Screen shall be 12 mm by 12 mm aluminum or stainless steel wire mesh.

2.9 FABRICATION

2.9.1 Factory Coating

Unless otherwise specified, equipment and component items, when fabricated from ferrous metal, shall be factory finished with the manufacturer's standard finish. Cut edges of galvanized surfaces where hot-dip galvanized sheet steel is used shall be coated with a zinc-rich coating.

2.9.2 Factory Applied Insulation

Refrigeration equipment shall be provided with factory installed insulation on surfaces subject to sweating including the suction line piping. Where motors are the gas-cooled type, factory installed insulation shall be provided on the cold-gas inlet connection to the motor per manufacturer's standard practice. Factory insulated items installed outdoors are not required to be fire-rated. As a minimum, factory insulated items installed indoors shall have a flame spread index no higher than 75 and a smoke developed index no higher than 150. Factory insulated items (no jacket) installed indoors and which are located in air plenums, in ceiling spaces, and in attic spaces shall have a flame spread index no higher than 25 and a smoke developed index no higher than 50. Flame spread and smoke developed indexes shall be determined by ASTM E 84. Insulation shall be tested in the same density and installed thickness as the material to be used in the actual construction. Material supplied by a manufacturer with a jacket shall be tested as a composite material. Jackets, facings, and adhesives shall have a flame spread index no higher than 25 and a smoke developed index no higher than 50 when tested in accordance with ASTM E 84.

2.10 SUPPLEMENTAL COMPONENTS/SERVICES

2.10.1 Refrigerant Piping

Refrigerant piping, valves, and accessories shall be in accordance with ASHRAE 15 and ASME B31.5, except as specified herein. Refrigerant piping, and accessories shall be compatible with the fluids used and capable of withstanding the pressures and temperatures of the service. Refrigerant piping, and accessories used for refrigerant service shall be cleaned, dehydrated, and sealed (capped or plugged) prior to shipment from the manufacturer's plant.

2.10.1.1 Copper Tubing

Copper tubing shall conform to ASTM B 280 annealed or hard drawn as required. Copper tubing shall be soft annealed where bending is required and hard drawn where no bending is required.

2.10.1.2 Brazing Filler Metal

Filler metal shall conform to AWS A5.8, Type BAg-5 with AWS Type 3 flux, except Type BCuP-5 or BCuP-6 may be used for brazing copper-to-copper joints.

2.10.2 Ductwork

Ductwork shall be provided and installed in accordance with Section 15895 AIR SUPPLY, DISTRIBUTION, VENTILATION, AND EXHAUST SYSTEM.

2.10.3 Temperature Controls

Temperature controls shall be in accordance with Section 15950 HEATING, VENTILATING AND AIR CONDITIONING (HVAC) CONTROL SYSTEMS.

PART 3 EXECUTION

3.1 INSTALLATION

Work shall be performed in accordance with the manufacturer's published diagrams, recommendations, and equipment warranty requirements. Where equipment is specified to conform to the requirements of ASME BPVC SEC VIII D1and ASME BPVC SEC IX the design, fabrication, and installation of the system shall conform to ASME BPVC SEC VIII D1 and ASME BPVC SEC IX.

3.1.1 Equipment

Refrigeration equipment and the installation thereof shall conform to ASHRAE 15. Necessary supports shall be provided for all equipment, appurtenances, and pipe as required, including frames or supports for compressors, condensers, and similar items. Compressors shall be isolated from the building structure. If mechanical vibration isolators are not provided, vibration absorbing foundations shall be provided. Each foundation shall include isolation units consisting of machine and floor or foundation fastenings, together with intermediate isolation material. Other floor-mounted equipment shall be set on not less than a 150 mm concrete pad doweled in place. Foundation drawings, bolt-setting information, and foundation bolts shall be furnished prior to concrete foundation construction for all equipment indicated or required to have concrete foundations. Concrete for foundations shall be as specified in

Section 03300 CAST-IN-PLACE STRUCTURAL CONCRETE. Equipment shall be properly leveled, aligned, and secured in place in accordance with manufacturer's instructions.

3.1.2 Mechanical Room Ventilation

Mechanical ventilation systems shall be in accordance with Section 15895 AIR SUPPLY, DISTRIBUTION, VENTILATION, AND EXHAUST SYSTEM.

3.1.3 Field Applied Insulation

Field applied insulation shall be as specified in Section 15080 THERMAL INSULATION FOR MECHANICAL SYSTEMS, except as defined differently herein.

3.1.4 Field Painting

Painting required for surfaces not otherwise specified, and finish painting of items only primed at the factory are specified in Section 09900 PAINTING, GENERAL.

3.2 CLEANING AND ADJUSTING

Equipment shall be wiped clean, with all traces of oil, dust, dirt, or paint spots removed. Temporary filters shall be provided for all fans that are operated during construction, and new filters shall be installed after all construction dirt has been removed from the building. System shall be maintained in this clean condition until final acceptance. Bearings shall be properly lubricated with oil or grease as recommended by the manufacturer. Belts shall be tightened to proper tension. Control valves and other miscellaneous equipment requiring adjustment shall be adjusted to setting indicated or directed. Fans shall be adjusted to the speed indicated by the manufacturer to meet specified conditions. Testing, adjusting, and balancing shall be as specified in Section 15990 TESTING, ADJUSTING, AND BALANCING OF HVAC SYSTEMS.

3.3 REFRIGERANT TESTS, CHARGING, AND START-UP

Split-system refrigerant piping systems shall be tested and charged as per manufacturer's recommendations. Following charging, packaged systems shall be tested for leaks with a halide torch or an electronic leak detector.

3.3.1 Refrigerant Leakage

If a refrigerant leak is discovered after the system has been charged, the leaking portion of the system shall immediately be isolated from the remainder of the system and the refrigerant pumped into the system receiver or other suitable container. Under no circumstances shall the refrigerant be discharged into the atmosphere.

3.3.2 Contractor's Responsibility

The Contractor shall, at all times during the installation and testing of the refrigeration system, take steps to prevent the release of refrigerants into the atmosphere. The steps shall include, but not be limited to, procedures which will minimize the release of refrigerants to the atmosphere and the use of refrigerant recovery devices to remove refrigerant from the system and store the refrigerant for reuse or reclaim. At no time shall more than 85 g (3 ounces) of refrigerant be released to the atmosphere in any one occurrence. Any system leaks within the first

year shall be repaired in accordance with the requirements herein at no cost to the Government including material, labor, and refrigerant if the leak is the result of defective equipment, material, or installation.

3.4 SYSTEM PERFORMANCE TESTS

Before each refrigeration system is accepted, tests to demonstrate the general operating characteristics of all equipment shall be conducted by a registered professional engineer or an approved manufacturer's start-up representative experienced in system start-up and testing, at such times as directed. Tests shall cover a period of not less than 48 hours for each system and shall demonstrate that the entire system is functioning in accordance with the drawings and specifications. Corrections and adjustments shall be made as necessary and tests shall be re-conducted to demonstrate that the entire system is functioning as specified. Prior to acceptance, service valve seal caps and blanks over gauge points shall be installed and tightened. Any refrigerant lost during the system startup shall be replaced. If tests do not demonstrate satisfactory system performance, deficiencies shall be corrected and the system shall be retested. Tests shall be conducted in the presence of the Government. Water and electricity required for the tests will be furnished by the Government. Any material, equipment, instruments, and personnel required for the test shall be provided by the Contractor. Field tests shall be coordinated with Section 15990 TESTING, ADJUSTING, AND BALANCING OF HVAC SYSTEMS.

3.5 DEMONSTRATIONS

Contractor shall conduct a training course for the operating staff as designated by the Contracting Officer. The training period shall consist of a total 16 hours of normal working time and start after the system is functionally completed but prior to final acceptance tests. The field Posted Instructions shall cover all of the items contained in the approved operation and maintenance manuals as well as demonstrations of routine maintenance operations.Training course shall cover operation of equipment per manufacturer's operation manuals. Cover Spare Parts Data during training course.

-- End of Section --

SECTION 15702

COMPUTER ROOM AIR CONDITIONING UNITS

PART 1 GENERAL

1.1 REFERENCES

The publications listed below form a part of this specification to the extent referenced. The publications are referred to within the text by the basic designation only.

AIR-CONDITIONING AND REFRIGERATION INSTITUTE (ARI)

ARI 410	(2001; Addendum 2002) Forced-Circulation Air-Cooling and Air-Heating Coils

AMERICAN SOCIETY OF HEATING, REFRIGERATING AND AIR-CONDITIONING ENGINEERS (ASHRAE)

ASHRAE 15	(2001; Errata 2002) Safety Standard for Refrigeration Systems
ASHRAE 52.1	(1992) Gravimetric and Dust-Spot Procedures for Testing Air-Cleaning Devices Used in General Ventilation for Removing Particulate Matter
ASHRAE 90.1	(2001; various Errata) Energy Standard for Buildings Except Low-Rise Residential Buildings

ASME INTERNATIONAL (ASME)

ASME B16.22	(2002) Wrought Copper and Copper Alloy Solder Joint Pressure Fittings
ASME B16.26	(1988) Cast Copper Alloy Fittings for Flared Copper Tubes
ASME B31.1	(2004) Power Piping
ASME B31.5	(2001) Refrigeration Piping and Heat Transfer Components

ASTM INTERNATIONAL (ASTM)

ASTM B 280	(2003) Seamless Copper Tube for Air Conditioning and Refrigeration Field Service

ETL TESTING LABORATORIES (ETL)

ETL DLP	(updated continuously) Directory of ETL Listed Products

NATIONAL FIRE PROTECTION ASSOCIATION (NFPA)

NFPA 70	(2005) National Electrical Code
NFPA 90A	(2002) Installation of Air Conditioning and Ventilating Systems

UNDERWRITERS LABORATORIES (UL)

UL Elec Equip Dir	(2003) Electrical Appliance and Utilization Equipment Directory

1.2 SYSTEM DESCRIPTION

Provide new computer room air conditioning units (CRACU) complete and ready for operation.

1.3 SUBMITTALS

Government approval is required for submittals with a "G" designation; submittals not having a "G" designation are for information only. When used, a designation following the "G" designation identifies the office that will review the submittal for the Government. Submit the following in accordance with Section 01330 SUBMITTAL PROCEDURES:

SD-03 Product Data

Computer room air conditioning units

SD-06 Test Reports

CRACU production schedule and factory test schedule

Manufacturer's factory test plans

Factory test reports

Field test schedule

Manufacturer's field test plans

Field test reports

SD-08 Manufacturer's Instructions

Installation manual for each type of CRACU

SD-10 Operation and Maintenance Data

Computer room air conditioning units

1.4 OZONE DEPLETION FACTOR

Equipment using refrigerants R-11, R-12, R-113, R-114, R-115, R-500, or refrigerants with ozone depletion factor (ODF) greater than 0.05 or refrigerants containing CFC or Halon shall not be permitted.

PART 2 PRODUCTS

2.1 COMPUTER ROOM AIR CONDITIONING UNITS (CRACU)

ASHRAE 15. Provide self-contained units, designed, and factory assembled, and factory tested. Unit shall be listed in UL Elec Equip Dir or ETL DLPfor computer room application. Equipment shall be in accordance with ASHRAE 90.1 at a minimum. Unit shall include room cabinet and frame, fan section, filter section, cooling coil, reheat coil, compressors, condensers, controls, and, interconnecting piping internal to the CRACU.

2.1.1 Cabinet and Frame

2.1.1.1 Unit Cabinet

Unit frame shall be minimum 2.0 millimeter welded steel tubes or steel angles and shall be mill-galvanized or coated with an epoxy finish, or an approved manufacturer's standard finish, if equivalent.

Exterior panels shall be furniture grade steel sheet, minimum of 1.0 mm, mill-galvanized or coated with a corrosion-inhibiting epoxy finish, or an approved equivalent finish. Mill galvanized sheet metal shall be coated with not less than 380 gram of zinc per square meter of two-sided surface. Mill rolled structural steel shall be hot-dip galvanized or primed and painted. Cut edges, burns and scratches in hot-dip galvanized surfaces shall be coated with galvanizing repair coating.

Provide removable panel for access to controls without interrupting airflow. Panels shall be gasketed to prevent air leakage under system operating pressure and shall be removable for service access without the use of special tools. Condensate pans shall be minimum 1.0 millimeter Type 304 stainless steel and shall be piped to drain.

Exterior surfaces of cabinets constructed of mill-galvanized steel shall be finished by the manufacturer's standard enamel finish in color as selected by Contracting Officer.

> Items where color, pattern, or fabric are be selected by Contracting Officer from manufacturer's full range shall have choices submitted to Contracting Officer simultaneously with other items requiring finish selection.

CRACU manufacturer's standard cabinet materials and finishes will be acceptable if considered equivalent to the above requirements by the Contracting Officer.

2.1.1.2 Cabinet Interiors Sound Attenuation

Provide a factory-installed sound attenuation system in the interior of the CRACU cabinet.

CRACU cabinet panels interior shall be provided with 25 millimeters of 24 kilogram per cubic meter neoprene-coated fiber glass insulation on interior of cabinet panels. Insulation shall be applied to the cabinet panels with 100 percent adhesive coverage and both the insulation and the adhesive shall conform to NFPA 90A.

Compressors located in CRACU interior cabinets shall be either wrapped in a sound absorbing insulating blanket or enclosed in it's own sound absorbing

insulated mini-cabinet inside of the larger CRACU interior cabinet.

Fans and compressors located in the CRACU interior cabinet shall be provided with vibration isolators between their respective support frames and the cabinet framing.

CRACU manufacturer's standard interior cabinet sound attenuation materials and finishes will be acceptable if considered equivalent to the above requirements by the Contracting Officer.

2.1.2 Fan Section

Fans which force air through coils into the conditioned space shall have belt drives and adjustable sheaves sized to ensure achievement of design air flow by field adjustments. Fan system design shall be such that design air flow shall be achieved at the midpoint of sheave adjustment.

The supply air fan shall be AMCA certified, double-inlet/double-width, and equipped with forward-curved blades wheel. The supply air fan shall be statically and dynamically balanced and equipped with V-belt drive. The fan shall have self-aligning, permanently lubricated ball bearings with a minimum life span of 100,000 hours.

Provide V-belt drive sized for 200 percent of the motor nameplate rating. Fan speed shall be adjustable with cast iron variable pitch pulleys. Sheaves shall be within the middle one third of the sheave adjustment range.

The fan motor shall be drip-proof with NEMA rated frame, inherent overload protection, and sliding adjustable motor base. The maximum vibrations shall not exceed 2 mils (0.05 mm) in any plane.

2.1.3 Cooling Coil

Provide ARI 410 coils and slope for drainage. Coil shall be constructed of seamless copper tubes with plate aluminum fins. Each coil, in the production process, shall be individually tested at 2200 kPa with compressed air under water and verified to be air tight. Provide DX coil complete with a distributor and thermostatic expansion valve with external equalizer. Provide condensate drain pan of stainless steel construction with nonferrous connections and internal trap, and a condensate pump system complete with integral pump discharge check valve, integral float switch, reservoir, and pump and motor assembly.

2.1.4 Filters

Provide UL listed 50 mm thick deep pleated fiberglass throwaway type filters. Efficiency of filter bank shall be a minimum of 30 percent efficiency based on ASHRAE 52.1 requirements. Provide one complete spare filter bank set for installation prior to final acceptance testing covered in Part 3 of this section.

2.1.5 Reheat Coil

Provide electric reheat coils with low watts density. The electric reheat coils shall be enclosed in 304 stainless steel tubes and 304 stainless steel fins. Provide modulating control of the electric reheat coils by multiple stages. Provide UL or ETL listed safety switches to protect system from overheating.

2.1.6 Refrigeration System

Provide compressors complete with vibration isolation, suction and discharge service valves, high and low pressure safety switches, and built-in overload protection. Provide refrigeration circuits including hot gas mufflers, liquid-line filter-drier, refrigerant sight glass and moisture indicator, externally equalized expansion valve, and liquid-line solenoid valve factory connected with refrigeration copper tubing. Crankcase heaters are required. Provide hot gas bypass.

2.1.6.1 Compressors

Provide single or dual, hermetic or semi-hermetic or scroll compressors. If dual compressors are provided, the refrigeration system shall be equipped with two independent refrigeration circuits.

2.1.6.2 Refrigerant Tubing

Field-installed refrigerant tubing for split systems shall be ASTM B 280, cleaned, dehydrated, and sealed. Further, provide ASME B16.22 solder joint refrigerant fittings and adapters with silver brazing alloy solder and silver brazing alloy flux. During brazing operations bleed a small amount of dry oil-free nitrogen continuously through the refrigerant tubing. If required for connections to equipment, provide ASME B16.26 flared fittings.

2.1.7 Condenser

Provide condenser circuit pre-piped with start-up and head pressure controls to maintain system operation at ambient temperatures down to 10 degrees C.

2.1.7.1 Air-cooled Condenser

Provide remote air-cooled condenser arranged for vertical air discharge. The direct-driven propeller fans shall have factory balanced aluminum blades and shall be equipped with fan guards. The coils shall be constructed from seamless copper tubes with plate type aluminum fins. The coils, in the production process, shall be pressure tested with compressed air 2068 kPa under water and verified to be leak-free. The air-cooled condensers casings and other components shall be suitable for outdoor location and constructed from aluminum with manufacturer's standard corrosion-resistant finish,or galvanized steel. An integral factory wired and tested control panel shall be provided for the condenser.

2.1.8 Space Temperature Control System

Provide microprocessor control system integral with unit including electronic control center, control valves, sensors, wiring, and other appurtenances for workable system. Provide access panel or door in front of unit.

Isolate electronic control center from conditioned airstream to allow service while system is in operation. Provide control sensors in unit for cooling, dehumidifying, and reheating. High-voltage circuits in system shall have individual leg overload protection. Starters, contactors, and relays shall be controlled by 24 volt control circuit.

High-voltage circuit components shall be protected by safety lock, dead-front panel. Mount nonautomatic, molded-case circuit breaker in

high-voltage section of electrical panel. Operating mechanism shall prevent access to high-voltage electrical components until switched to "OFF" position.

2.1.9 Air Return and Delivery Orientation

Computer room air conditioning units shall be upflow discharge, front return,draw-thru cooling coil, and shall be fitted with collars for top supply duct connections. Upflow discharge shall discharge air with a acoustical lined sweep or acoustically-lined multiple turning vane elbows provided to direct the flow of air away from the back of the unit. Supply (discharge air) ducting from the upflow units shall be off of each blower discharge outlet, that is, one duct and duct collar per blower. Provide acoustical lining on the interior of the supply air devices in compliance with with requirements specified hereinafter in paragraph "Cabinet Interiors Sound Attenuation". Provide a factory fabricated discharge plenum with minimum two adjustable supply registers.

2.2 ELECTRICAL

2.2.1 Electrical Motors, Controllers, Contactors, and Disconnects

Furnish with respective pieces of equipment. Motors, controllers, contactors, and disconnects shall conform to Section 16402 INTERIOR DISTRIBUTION SYSTEM, as modified and supplemented by this section. Provide electrical connections under Section 16402 INTERIOR DISTRIBUTION SYSTEM. Provide controllers and contactors with maximum of 120-volt control circuits, and auxiliary contacts for use with controls furnished. When motors and equipment furnished are larger than sizes indicated, the cost of providing additional electrical service and related work shall be included under this section.

2.2.2 Electrical Control Wiring

Provide control wiring under this section in accordance with NFPA 70 and Section 16402 INTERIOR DISTRIBUTION SYSTEM. Provide Space temperature control system drawings which include point-to-point electrical wiring diagrams.

2.3 FIRE PROTECTION DEVICES

CRACU's shall have a factory installed duct smoke detector that shall de-energize the unit when unsafe smoke conditions occur in the unit discharge.

2.4 SOURCE QUALITY CONTROL

Provide factory test plans, factory test schedules, factory tests and factory test reports on each of the CRACUs.

2.4.1 Manufacturer's Factory Test Plans

For each CRACU, submit a factory test plan which when followed during factory testing shall verify that the performance scheduled on the drawings is met by the produced CRACU models.

The manufacturer shall perform factory tests on the actual CRACUs produced for this project. The test reports shall document the performance tests conducted on the factory assembled computer room air conditioning units.

Performance testing on the individual computer room air conditioning unit components, not factory assembled, is not acceptable.

Submit the required test plans for review and approval to the Contracting Officer at least 90 calendar days before scheduled factory test date.

2.4.1.1 Test Procedure

Indicate in each test plan the factory acceptance test procedures. Procedures shall be structured to test all modes of operation to confirm that the controls through all modes of control to confirm that the controls are performing in accordance with the intended sequence of control.

Controllers shall be verified to be properly calibrated and have the proper set point to provide stable control of their respective equipment.

Include in each test plan a detailed step-by-step procedure for testing automatic controls provided by the manufacturer.

2.4.1.2 Performance Variables

Each test plan shall list performance variables that are required to be measured or tested as part of the field test. Include in the listed performance indicated on the equipment schedules on the contract design drawings.

Manufacturer shall furnish with each test procedure a description of acceptable performance results that shall be verified. Manufacturer shall identify the acceptable limits or tolerances within which each tested performance variable shall acceptably operate.

2.4.1.3 Test Configuration

Plans shall indicate that tests are to be performed for a minimum of four continuous hours in a wet coil condition. If test period is interrupted, the four hour test period shall be started over. Each test plan shall be job specific and shall address the particular CRACUs and particular conditions which exist with this contract. Generic or general preprinted test procedures are not acceptable. Tests shall include a top air discharge configuration.

2.4.1.4 Tested Variables

Plans shall provide for air side testing which includes verification of the airflow, total static pressure; fan drive motor KW, amperage and RPM; and fan RPM. Provide entering air temperatures equal to those indicated on the CRACU schedules.

2.4.1.5 Thermal Testing

hermal testing shall verify CRACU heating, sensible cooling, total cooling, and humidifying performance scheduled on the contract drawings.

2.4.1.6 Specialized Components

Include procedures for field testing and field adjusting specialized components, such as hot gas bypass control valves, or pressure valves.

2.4.1.7 Factory Tests Reporting Forms

Each test plan shall include the required test reporting forms to be completed by the Contractor's testing representatives. Submit factory test reports, referencing each tested CRACU serial number, and receive approval before delivery of CRACU to the project site.

2.4.2 CRACU Production Schedule and Factory Test Schedule

The Government reserves the right to witness factory tests.

Provide the CRACU production schedule and factory test schedule for tests to be performed at the manufacturer's test facility. Submit planned production schedule, and factory test schedule and test location, to the Contracting Officer as soon as it is scheduled but not less than 60 calendar days prior to the scheduled factory test date. Track this schedule through the production phases and if a scheduled factory test date changes, give advanced notice to Contracting Officer as soon as possible but at least 15 calendar days in advance of the scheduled test dates.

2.4.3 Factory Tests

Conduct the factory testing in compliance with the Contracting Officer approved manufacturer's field test plan, and in accordance with additional field testing requirements specified herein. Record the required data using the test reporting forms approved of the approved field test plan. Conduct the test for each CRACU for the continuous test period in the approved test plan. A CRACU shutdown before the continuous test period is completed shall result in the test period being started again and run for the required duration.

2.4.4 Deficiency Resolution

The test requirements shall be acceptably met; deficiencies identified during the tests shall be corrected in compliance with the manufacturer's recommendations and corrections tested as specified in the paragraph "Factory Test Plans".

2.4.5 Factory Test Reports

Use the test reporting forms approved in the factory test plan. Final test report forms shall be typed including data entries and remarks. Completed test report forms for each CRACU shall be reviewed, approved, and signed by the Manufacturer's test director.

PART 3 EXECUTION

3.1 INSTALLATION

3.1.1 CRACU System

Installation of each CRACU system including equipment, materials, installation, workmanship, fabrication, assembly, erection, examination, inspection, and testing, shall be in accordance with ASME B31.1, ASME B31.5, NFPA 70, as modified and supplemented by the requirements of this section and the CRACU manufacturer's recommendations.

3.1.2 Installation Instructions

Provide a manufacturer's installation manual for each type of CRACU.

3.2 FIELD QUALITY CONTROL

Upon completion and before final acceptance of work, test each CRACU subsystem in service to demonstrate compliance with the contract requirements, including field testing specified below. Adjust controls and balance systems prior to final acceptance of completed systems. Test controls through every cycle of operation. Test safety controls to demonstrate performance of required function. Correct defects in work provided by Contractor and repeat tests. Furnish steam, fuel, water, electricity, instruments, connecting devices, and personnel for tests. Flush and clean piping before placing in operation. Clean equipment, piping, strainers, and ducts. Prior to commencement of field testing, remove all filters and provide new filters.

3.3 FIELD TESTING

Provide field test plans, field test schedules, field tests and field test reports on each of the CRACUs. Field test each CRACU for Contracting Officer acceptance in accordance with the CRACU manufacturer's approved field test plan.

3.3.1 Manufacturer's Field Test Plans

Submit field test plans developed by the manufacturer for each CRACU; submit the field test plans along with the factory test plans specified herein before. Field test plans developed by the installing Contractor, or the equipment sales agency furnishing the CRACU, will not be acceptable.

The Contracting Officer will review and approve the field test plan for each of the listed CRACU's prior to commencement of field testing of the equipment. The approved field test plans shall be followed for the field tests of the CRACU and test reporting.

3.3.1.1 Coordinated Testing

Indicate in each field test plan when work required by this section requires coordination with test work required by other specification sections. Furnish test procedures for the simultaneous or integrated testing of: CRACU controls which interlock and interface with controls factory prewired.

3.3.1.2 Prerequisite Testing

Each CRACU for which performance testing is dependent upon the completion of the work covered by Section 15950 HVAC TESTING/ADJUSTING/BALANCING must have that work completed as a prerequisite to testing work under this section. Indicate in each field test plan when such prerequisite work is required.

3.3.1.3 Test Procedure

Indicate in each field test plan the CRACU manufacturer's published start-up, and field acceptance test procedures. Include in each test plan a detailed step-by-step procedure for testing automatic controls provided by the manufacturer.

Procedures shall be structured to test the controls through all modes of control to confirm that the controls are performing with the intended sequence of control.

Controllers shall be verified to be properly calibrated and have the proper set point to provide stable control of their respective equipment.

3.3.1.4 Performance Variables

Each test plan shall list performance variables that are required to be measured or tested as part of the field test.

Include, in the listed performance variables, requirements indicated on the CRACU schedules on the design drawings. Manufacturer shall furnish, with each test procedure, a description of acceptable results that have been verified.

Manufacturer shall identify the acceptable limits or tolerances within which each tested performance variable shall acceptably operate.

3.3.1.5 Test Configuration

Plans shall indicate that tests are to be performed for a minimum of four continuous hours in a wet coil condition. If test period is interrupted, the four hour test period shall be started over. Each test plan shall be job specific and shall address the particular CRACUs and particular conditions which exist with this contract. Generic or general preprinted test procedures are not acceptable.

3.3.1.6 Tested Variables

Plans shall provide for air side testing which includes verification of the airflow, total static pressure; fan drive motor KW, amperage and RPM; and fan RPM. Provide entering air temperatures equal to those indicated on the CRACU schedules.

3.3.1.7 Thermal Testing

Plans shall provide thermal testing utilizing temperatures equal to those indicated on the CRACU schedules. Thermal testing shall verify CRACU heating, sensible cooling, total cooling, and humidifying performance scheduled on the contract drawings.

3.3.1.8 Specialized Components

Include procedures for field testing and field adjusting specialized components, such as hot gas bypass control valves, or pressure valves.

3.3.1.9 Field Test Reporting Forms

Each test plan shall include the required test reporting forms to be completed by the Contractor's testing representatives.

3.3.2 Field Test Schedule

Notify the Contracting Officer in writing at least 30 calendar days prior to the testing. Within 30 calendar days after acceptable completion of testing, submit each test report for the review and approval of the

Contracting Officer.

3.3.3 Manufacturer's Test Representative

Furnish a factory trained field test representative authorized by the CRACU manufacturer to oversee the complete execution of the field testing. This test representative shall also review, approve, and sign the completed field test report. Signatures shall be accompanied by the person's name typed.

Submit credentials of the manufacturer's field test representative proposed, including current telephone number, to the Contracting Officer for review and approval. Submit these credentials with the written advance notice of the field tests

3.3.4 Field Tests

Conduct the field testing in compliance with the Contracting Officer approved manufacturer's field test plan, and in accordance with additional field testing requirements specified herein. Record the required data using the test reporting forms approved of the approved field test plan. Conduct the test for each CRACU for a continuous 24-hour test period. A CRACU shutdown before the continuous 24-hour test period is completed shall result in the 24-hour test period being started again and run for the required duration.

3.3.5 Deficiency Resolution

The test requirements shall be acceptably met; deficiencies identified during the tests shall be corrected in compliance with the manufacturer's recommendations. Corrections shall be tested again in compliance with the requirements specified in the paragraph "Field Test Plans".

3.3.6 Field Test Reports

Use the test reporting forms approved in the field test plan. Final test report forms shall be typed, including data entries and remarks. Completed test report forms for each CRACU shall be reviewed, approved, and signed by the Contractor's test director and the QC manager.

-- End of Section --

SECTION 15768

ELECTRIC SPACE HEATING EQUIPMENT

PART 1 GENERAL

1.1 REFERENCES

The publications listed below form a part of this specification to the extent referenced. The publications are referred to in the text by the basic designation only.Unless otherwise specified or indicated, electrical and electronics terms used in these specifications and on the Drawings, shall also be defined in DIN, I.E.C., BS or EN standards.

NATIONAL FIRE PROTECTION ASSOCIATION (NFPA)

NFPA 70	(2005) National Electrical Code

UNDERWRITERS LABORATORIES (UL)

UL 1025	(1980; R 1990, Bul. 1991) Electric Air Heaters
UL 1042	(1994; Rev Mar 2004) Electric Baseboard Heating Equipment

1.2 GENERAL REQUIREMENTS

Section 16050, "Basic Electrical Materials and Methods," applies to this section, with the additions and modifications specified herein.

1.3 SUBMITTALS

Government approval is required for submittals with a "G" designation; submittals not having a "G" designation are for information only. When used, a designation following the "G" designation identifies the office that will review the submittal for the Government. Submit the following in accordance with Section 01330 SUBMITTAL PROCEDURES:

SD-03 Product Data

Electric unit heaters

Electric baseboard units

Thermostat

Unit thermostat

PART 2 PRODUCTS

2.1 ELECTRIC UNIT HEATERS

UL 1025; wattage, voltage, phase, number of steps, watts and cubic meter per second as indicated on Drawings. Provide control-circuit terminals and single source of power supply. Heaters 3 KW and larger shall be 3-phase, with load balanced on each of the three phases. Limit leaving air

temperature to 60 degrees C with entering air of 15 degrees C.

All electric unit heaters shall be heavy duty, commercial units permenantly fixed in place.

2.1.1 Enclosure

Minimum 20 gage steel.

2.1.2 Heating Element

Nickel chromium heating wire element, free from expansion noise and 60 Hz hum. Embed element in magnesium-oxide insulating refractory. Seal element in high-mass steel or corrosion-resisting metallic sheath with fins. Enclose element ends in terminal box. Provide not more than six fins per 25 mm. Limit fin surface temperature 285 degrees C at any point during normal operation.

2.1.3 Controls

Include limit controls for overheat protection of heaters. For remote thermostatic operation. Provide contactor rated for 100,000 duty cycles.

2.1.4 Wiring

Completely factory-prewired to terminal strips, ready to receive branch circuit and control connections for 60 degrees C copper wiring.

2.1.5 Thermostat

Provide tamper resistant integral thermostat, adjustable without requiring removal of heater components. Thermostat operating range shall be approximately 10 degrees C to a maximum of 24 degrees C with operating differential of 0.5 degrees C or less.

2.1.6 Disconnect Means

Provide factory-installed safety disconnect switch in the housing or in an auxiliary matching control section with "off" position marking on the face plate.

2.2 ELECTRIC BASEBOARD UNITS

UL 1042; wattage, voltage, phase, heat in watts output indicated. Provide units complete with heating elements, mounting brackets, end closures, splice plates, interior and exterior corners and accessible wiring compartment. Limit outlet air temperature and enclosure surfaces to 93 degrees C under continuous operating conditions.

All electric baseboard heaters shall be heavy duty, commercial units permenantly fixed in place.

2.2.1 Enclosure

Fabricate from steel not less than 18 gage. Provide manufacturer's standard finish. Locate terminal blocks for branch circuit conductor and control wiring connections as required. Wiring shall conform to NFPA 70.

2.2.2 Accessories

Where continuous wall-to-wall installations are indicated, provide accessories; including corner fittings, fillers, splice plates, and end caps. Accessories shall have the same profile as the basic unit, and contain no sharp edges.

2.2.3 Limit Control

Provide thermal overload protection.

2.2.4 Disconnect Means

Provide factory-installed safety disconnect switch in the housing or in an auxiliary matching control section with "off" position marking on the face plate.

2.2.5 Unit Thermostat

Provide tamper resistant integral tool adjustable thermostat, without requiring removal of cabinet parts. Thermostat, operating range shall be approximately 10 degrees C to a maximum of 24 degrees C with operating differential of 0.5 degrees C or less.

PART 3 EXECUTION

3.1 INSTALLATION

Install in conformance with the manufacturer's instructions and approved heater installation drawing, with necessary clearances for air circulation, maintenance, inspection, service testing and repair. Connect to electrical supply in accordance with Section 16402, "Interior Distribution System."

3.1.1 Unit Heaters

Mount units plumb, square and level with ceiling and walls.

3.1.2 Baseboard Heaters

Verify manufacturer's clearance requirements from electrical cords, drapes, and other furnishings.

3.2 FIELD QUALITY CONTROL

Provide necessary personnel, instruments, and equipment to perform tests. Notify the Government 5 working days prior to scheduled testings and locations.

3.2.1 Field Inspection

Prior to initial operation, inspect installed equipment for conformance with drawings and specifications.

3.2.2 Insulation Resistance Tests

Test 600-volt wiring to verify that no short circuits or grounds exist. Tests shall be made using an instrument which applies a voltage of approximately 500 volts and provides a direct reading of resistance in ohms.

3.2.3 Operational Tests

Test equipment circuits and devices to demonstrate proper operation. Test each item of control equipment not less than 5 times.

-- End of Section --

SECTION 15835

CEILING FANS

PART 1 GENERAL

1.1 REFERENCES

The publications listed below form a part of this section to the extent referenced. The publications are referred to within the text by the basic designation only.

NATIONAL FIRE PROTECTION ASSOCIATION (NFPA)

NFPA 70 (2005) National Electrical Code

1.2 SUBMITTALS

Government approval is required for submittals with a "G" designation; submittals not having a "G" designation are for information only. When used, a designation following the "G" designation identifies the office that will review the submittal for the Government. Submit the following in accordance with Section 01330 SUBMITTAL PROCEDURES:

SD-03 Product Data

Ceiling Fans

Manufacturer's descriptive data, catalog cuts, and installation instructions.

SD-10 Operation and Maintenance Data

Ceiling Fans

Operation and Maintenance Manuals shall be as required in Section 01060: SPECIAL CLAUSE entitled OPERATION AND MAINTENANCE (O&M) DATA FOR EQUIPMENT AND SYSTEMS.

PART 2 PRODUCTS

2.1 INDUSTRIAL CEILING FANS

2.1.1 General

Commercial-type ceiling fan. Residential-type fans are not acceptable. Install reversible type Fans in barrack areas, one and two man bedrooms, dining rooms, supply and storage areas and classrooms and offices.

2.1.2 Construction

Downrod: Heavy-duty steel; 19 mm (3/4-inch) diameter; length as required for mounting height clearance indicated.

Blades:

a. Number: Three
b. Material: Steel.

2.1.3 Electrical

Volts: 220, 50 hertz.

2.1.4 Fan Drives

Direct.

2.1.5 Motors

Three-speed, continuous duty, totally enclosed, cast metal yoke and housing.

2.1.6 Controls

Wall-mounted; rotary or slide.

2.2 FACTORY FINISHES

Manufacturer's standard paint applied to factory-assembled and -tested ceiling fans before shipping.

2.2.1 Color

White.

2.3 ELECTRICAL

Provide wiring under this section in accordance with NFPA 70 and Section 16402 INTERIOR DISTRIBUTION SYSTEM.

PART 3 EXECUTION

3.1 EXAMINATION

Examine areas and conditions, with Installer present, for compliance with requirements for conditions affecting performance of work.

Verify minimum clearances with adjacent and surrounding construction.

Examine support structure and roughing-in for electrical power and control systems to verify actual locations of attachment and connections before ceiling fans installation.

Examine ceilings for suitable conditions where ceiling fans will be installed.

Proceed with installation only after unsatisfactory conditions have been corrected.

3.2 INSTALLATION

Install ceiling fans at locations indicated to comply with ceiling fans manufacturer's written instructions.

Install ceiling fans in position and in relation to adjoining construction indicated. Securely anchor to supporting substrate in a manner that

produces a smoothly operating ceiling fan without shaking, wobbling or similar movement, and noise-free operation. Downrod shall be vertically plumb and ceiling fan blades horizontally flat.

Install controls according to manufacturer's written instructions.

Test ceiling fan units to verify that controls, switches, and other operating components are in optimum functioning condition.

3.3 ADJUSTING

Adjust ceiling fans and balance ceiling fan blades to operate smoothly, safely, and free from shake, wobble, or malfunction at all operational speeds.

3.4 CLEANING AND PROTECTION

Clean ceiling fans after installation, according to manufacturer's written instructions.

Provide final protection and maintain conditions, in a manner acceptable to manufacturer and Installer, that ensure that ceiling fans are without damage or deterioration at time of Substantial Completion.

Use type of covering approved by ceiling fan manufacturer that will effectively protect ceiling fans from dirt, dust, debris, and field-applied paint or coating overspray, or similar damage.

Replace damaged ceiling fans that cannot be repaired, in a manner approved by Architect, before time of Substantial Completion.

3.5 FIELD QUALITY CONTROL

3.5.1 Startup Checks

Verify that ceiling fans are secure to mountings and supporting devices and that connections to electrical power and control systems are complete.

Verify that adjusting is complete.

3.5.2 Operational Test

After electrical circuitry has been energized, start ceiling fans to confirm proper motor rotation and unit operation. Remove malfunctioning units, replace with new units, and retest.

3.5.3 Test and Adjust

Test and adjust controls. Replace damaged and malfunctioning controls and ceiling fans.

-- End of Section --

SECTION 15895

AIR SUPPLY, DISTRIBUTION, VENTILATION, AND EXHAUST SYSTEM

PART 1 GENERAL

1.1 REFERENCES

The publications listed below form a part of this specification to the extent referenced. The publications are referred to within the text by the basic designation only.

AIR-CONDITIONING AND REFRIGERATION INSTITUTE (ARI)

ARI 260	(2001) Sound Rating of Ducted Air Moving and Conditioning Equipment
ARI 430	(1999) Central-Station Air-Handling Units

AIR MOVEMENT AND CONTROL ASSOCIATION INTERNATIONAL(AMCA)

AMCA 210	(1999) Laboratory Methods of Testing Fans for Aerodynamic Performance Rating
AMCA 300	(1996) Reverberant Room Method for Sound Testing of Fans

ASTM INTERNATIONAL (ASTM)

ASTM A 53/A 53M	(2004a) Pipe, Steel, Black and Hot-Dipped, Zinc-Coated, Welded and Seamless
ASTM A 123/A 123M	(2002) Zinc (Hot-Dip Galvanized) Coatings on Iron and Steel Products
ASTM A 167	(2004) Stainless and Heat-Resisting Chromium-Nickel Steel Plate, Sheet, and Strip
ASTM A 924/A 924M	(2004) General Requirements for Steel Sheet, Metallic-Coated by the Hot-Dip Process
ASTM B 280	(2003) Seamless Copper Tube for Air Conditioning and Refrigeration Field Service
ASTM B 117	(2002) Operating Salt Spray (Fog) Apparatus
ASTM B 813	(2000e1) Liquid and Paste Fluxes for Soldering of Copper and Copper Alloy Tube
ASTM D 520	(2000) Zinc Dust Pigment

ASTM D 1654	(1992; R 2000) Evaluation of Painted or Coated Specimens Subjected to Corrosive Environments
ASTM D 3359	(2002) Measuring Adhesion by Tape Test
ASTM F 872	(1984; R 1990) Filter Units, Air Conditioning: Viscous-Impingement Type, Cleanable

AMERICAN SOCIETY OF HEATING, REFRIGERATING AND AIR-CONDITIONING ENGINEERS (ASHRAE)

ASHRAE 52.1	(1992) Gravimetric and Dust-Spot Procedures for Testing Air-Cleaning Devices Used in General Ventilation for Removing Particulate Matter
ASHRAE 68	(1997) Laboratory Method of Testing to Determine the Sound Power in a Duct
ASHRAE 70	(1991) Method of Testing for Rating the Performance of Air Outlets and Inlets

ASME INTERNATIONAL (ASME)

ASME B31.1	(2004) Power Piping

DUETSCHES INSTITUTE FUR NORMUNG (DIN)

DIN 24163-1	(1985) Fans; performance testing, standard characteristics
DIN 24163-2	(1985) Fans; performance testing, standardized test airways
DIN 24163-3	(1985) Fans; performance testing of small fans using standardized test airways

MANUFACTURERS STANDARDIZATION SOCIETY OF THE VALVE AND FITTINGS INDUSTRY (MSS)

MSS SP-58	(2002) Pipe Hangers and Supports - Materials, Design and Manufacture
MSS SP-69	(2002) Pipe Hangers and Supports - Selection and Application

NATIONAL ELECTRICAL MANUFACTURERS ASSOCIATION (NEMA)

NEMA MG 1	(2003; R 2004) Motors and Generators

NATIONAL FIRE PROTECTION ASSOCIATION (NFPA)

NFPA 90A	(2002) Installation of Air Conditioning and Ventilating Systems
NFPA 96	(2001) Ventilation Control and Fire Protection of Commercial Cooking Operations

SHEET METAL AND AIR CONDITIONING CONTRACTORS' NATIONAL ASSOCIATION (SMACNA)

SMACNA HVAC Duct Const Stds	(1995, 2nd Ed) HVAC Duct Construction Standards - Metal and Flexible
SMACNA Install Fire Damp HVAC	(2002, 5th Ed) Fire, Smoke and Radiation Damper Installation Guide for HVAC Systems

UNDERWRITERS LABORATORIES (UL)

UL 214	(1997; Rev thru Aug 2001) Tests for Flame-Propagation of Fabrics and Films
UL 555	(1999; Rev thru Jan 2002) Fire Dampers
UL 705	(2004) Power Ventilators
UL Bld Mat Dir	(2004) Building Materials Directory
UL Elec Const Dir	(2003) Electrical Construction Equipment Directory
UL Fire Resist Dir	(2004) Fire Resistance Directory

1.2 COORDINATION OF TRADES

Ductwork, piping offsets, fittings, and accessories shall be furnished as required to provide a complete installation and to eliminate interference with other construction.

1.3 DELIVERY AND STORAGE

Equipment delivered and placed in storage shall be stored with protection from the weather, humidity and temperature variations, dirt and dust, or other contaminants. Additionally, all pipes shall either be capped or plugged until installed.

1.4 FIELD MEASUREMENTS

After becoming familiar with all details of the work, the Contractor shall verify all dimensions in the field, and shall advise the Government of any discrepancy before performing the work.

1.5 SUBMITTALS

Government approval is required for submittals with a "G" designation; submittals not having a "G" designation are for information only. When used, a designation following the "G" designation identifies the office that will review the submittal for the Government. Submit the following in accordance with Section 01330 SUBMITTAL PROCEDURES

SD-03 Product Data

Components and Equipment

Manufacturer's catalog data included with the detail drawings for the following items. The data shall be highlighted to show

model, size, options, etc., that are intended for consideration. Data shall be adequate to demonstrate compliance with contract requirements for the following:

a. Piping Components

b. Ductwork Components

c. Air Systems Equipment

d. Air Handling Units

Diagrams

Proposed diagrams, at least 2 weeks prior to start of related testing. System diagrams that show the layout of equipment, piping, and ductwork, and typed condensed operation manuals explaining preventative maintenance procedures, methods of checking the system for normal, safe operation, and procedures for safely starting and stopping the system shall be framed under glass or laminated plastic. After approval, these items shall be posted where directed.

Manufacturer's experience

Statement demonstrating successful completion of similar services on at least 5 projects of similar size and scope, at least 2 weeks prior to submittal of other items required by this section.

SD-06 Test Reports

Test Procedures Schedule

Proposed test procedures for piping hydrostatic test, ductwork leak test, and performance tests of systems, at least 2 weeks prior to the start of related testing.

Performance Tests Schedule

Proposed test schedules for hydrostatic test of piping, ductwork leak test, and performance tests, at least 2 weeks prior to the start of related testing.

Performance Tests

Testing, Adjusting, and Balancing

Test reports for the piping hydrostatic test, ductwork leak test, and performance tests in booklet form, upon completion of testing. Reports shall document phases of tests performed including initial test summary, repairs/adjustments made, and final test results.

SD-10 Operation and Maintenance Data

Operating and Maintenance Instructions

Provide manuals listing step-by-step procedures required for

system startup, operation, shutdown, and routine maintenance, at least 2 weeks prior to field training. The manuals shall include the manufacturer's name, model number, parts list, list of parts and tools that should be kept in stock by the Government for routine maintenance including the name of a local supplier, simplified wiring and controls diagrams, and troubleshooting guide.

Operation and Maintenance Manuals shall be as required in Section 01060: SPECIAL CLAUSE entitled OPERATION AND MAINTENANCE (O&M) DATA FOR EQUIPMENT AND SYSTEMS, and include the additional requirements as specified hereinafter. In the event of a conflict, the more detailed requirement shall apply.

PART 2 PRODUCTS

2.1 STANDARD PRODUCTS

Components and equipment shall be standard products of a manufacturer regularly engaged in the manufacturing of products that are of a similar material, design and workmanship. The standard products shall have been in satisfactory commercial or industrial use for 2 years before bid opening. Manufacturer's experience shall be minimum 2 years and shall include applications of components and equipment under similar circumstances and of similar size. The 2 years must be satisfactorily completed by a product which has been sold or is offered for sale on the commercial market through advertisements, manufacturers' catalogs, or brochures. Products having less than a 2-year field service record will be acceptable if a certified record of satisfactory field operation, for not less than 6000 hours exclusive of the manufacturer's factory tests, can be shown. The equipment items shall be supported by a service organization.

2.2 ASBESTOS PROHIBITION

Asbestos and asbestos-containing products shall not be used.

2.3 NAMEPLATES

Equipment shall have a nameplate installed by the manufacturer that identifies the manufacturer's name, address, type or style, model or serial number, and catalog number.

2.4 EQUIPMENT GUARDS AND ACCESS

Belts, pulleys, chains, gears, couplings, projecting setscrews, keys, and other rotating parts exposed to personnel contact shall be fully enclosed or guarded according to OSHA requirements. High temperature equipment and piping exposed to contact by personnel or where it creates a potential fire hazard shall be properly guarded or covered with insulation of a type specified. Operating platforms, ladders, and guardrails shall be provided where shown and shall be constructed as indicated on Drawings.

2.5 PIPING COMPONENTS

2.5.1 Escutcheons

Escutcheons shall be chromium-plated iron or chromium-plated brass, either one piece or split pattern, held in place by internal spring tension or setscrews.

2.5.2 Pipe Hangers, Inserts, and Supports

Pipe hangers, inserts, and supports shall conform to MSS SP-58 and MSS SP-69.

2.5.3 Insulation

Shop and field applied insulation shall be as specified in Section 15080 THERMAL INSULATION FOR MECHANICAL SYSTEMS.

2.5.4 Condensate Drain Lines

Condensate drainage shall be provided for each item of equipment that generates condensate.

2.6 ELECTRICAL WORK

Electrical motor-driven equipment specified shall be provided complete with motor, motor starter, and controls. Unless otherwise specified, electric equipment, including wiring and motor efficiencies, shall be according to Section 16402 INTERIOR DISTRIBUTION SYSTEM . Electrical characteristics and enclosure type shall be as shown. Unless otherwise indicated, motors of 745 W and above shall be high efficiency type. Motor starters shall be provided complete with thermal overload protection and other appurtenances necessary. Each motor shall be according to NEMA MG 1 and shall be of sufficient size to drive the equipment at the specified capacity without exceeding the nameplate rating of the motor. Manual or automatic control and protective or signal devices required for the operation specified, and any control wiring required for controls and devices, but not shown, shall be provided. Where two-speed or variable-speed motors are indicated, solid-state variable-speed controller may be provided to accomplish the same function.

2.7 CONTROLS

Controls shall be provided as specified in Section 15950 HEATING, VENTILATING AND AIR CONDITIONING (HVAC) CONTROL SYSTEMS.

2.8 DUCTWORK COMPONENTS

2.8.1 Metal Ductwork

All aspects of metal ductwork construction, including all fittings and components, shall comply with SMACNA HVAC Duct Const Stds unless otherwise specified. Elbows shall be radius type with a centerline radius of 1.5 times the width or diameter of the duct where space permits. Otherwise, elbows having a minimum radius equal to the width or diameter of the duct or square elbows with factory fabricated turning vanes may be used. Static pressure Class 125, 250, and 500 Pa (1/2, 1, and 2 inch w.g.) ductwork shall meet the requirements of Seal Class C. Class 750 through 2500 Pa (3 through 10 inch w.g.) shall meet the requirements of Seal Class A. Sealants shall conform to fire hazard classification specified in Section 15080 THERMAL INSULATION FOR MECHANICAL SYSTEMS and shall be suitable for the range of air distribution and ambient temperatures that it will be exposed to. Pressure sensitive tape shall not be used as a sealant. Spiral lock seam duct, and flat oval shall be made with duct sealant and locked with not less than 3 equally spaced drive screws or other approved methods indicated in SMACNA HVAC Duct Const Stds. The sealant shall be applied to the exposed male part of the fitting collar so that the sealer will be on the inside of the joint and fully protected by the metal of the

duct fitting. One brush coat of the sealant shall be applied over the outside of the joint to at least 50 mm band width covering all screw heads and joint gap. Dents in the male portion of the slip fitting collar will not be acceptable. Outdoor air intake ducts and plenums shall be fabricated with watertight soldered or brazed joints and seams.

2.8.1.1 Transitions

Diverging air flow transitions shall be made with each side pitched out a maximum of 15 degrees, for an included angle of 30 degrees. Transitions for converging air flow shall be made with each side pitched in a maximum of 30 degrees, for an included angle of 60 degrees, or shall be as indicated. Factory-fabricated reducing fittings for systems using round duct sections when formed to the shape of the ASME short flow nozzle, need not comply with the maximum angles specified.

2.8.1.2 General Service Duct Connectors

A flexible duct connector approximately 150 mm in width shall be provided where sheet metal connections are made to fans or where ducts of dissimilar metals are connected. For round/oval ducts, the flexible material shall be secured by stainless steel or zinc-coated, iron clinch-type draw bands. For rectangular ducts, the flexible material locked to metal collars shall be installed using normal duct construction methods. The composite connector system shall comply with UL 214 and be classified as "flame-retarded fabrics" in UL Bld Mat Dir.

2.8.2 Ductwork Accessories

2.8.2.1 Duct Access Doors

Access doors shall be provided in ductwork and plenums where indicated and at all automatic motorized dampers, fire dampers, coils, thermostats, and other apparatus requiring service and inspection in the duct system, and unless otherwise shown, shall conform to SMACNA HVAC Duct Const StdsDIN, I.E.C., BS, or EN standards. Access doors shall be provided upstream and downstream of air flow measuring primaries and heating and cooling coils. Doors shall be minimum 375 x 450 mm, unless otherwise shown. Where duct size will not accommodate this size door, the doors shall be made as large as practicable. Doors 600 x 600 mm or larger shall be provided with fasteners operable from both sides. Doors in insulated ducts shall be the insulated type.

2.8.2.2 Fire Dampers

Fire dampers shall be 1.5 hour fire rated unless otherwise indicated. Fire dampers shall conform to the requirements of NFPA 90A and UL 555. The Contractor shall perform the fire damper test as outlined in NFPA 90A. A pressure relief damper shall be provided upstream of the fire damper. If the ductwork connected to the fire damper is to be insulated then this pressure relief damper shall be factory insulated. Fire dampers shall be automatic motorized operating type and shall have a dynamic rating suitable for the maximum air velocity and pressure differential to which it will be subjected. Fire dampers shall be approved for the specific application, and shall be installed according to their listing. Fire dampers shall be equipped with a steel sleeve or adequately sized frame installed in such a manner that disruption of the attached ductwork, if any, will not impair the operation of the damper. Sleeves or frames shall be equipped with perimeter mounting angles attached on both sides of the wall or floor

opening. Ductwork in fire-rated floor-ceiling or roof-ceiling assembly systems with air ducts that pierce the ceiling of the assemblies shall be constructed in conformance with UL Fire Resist Dir. Fire dampers shall be curtain type with damper blades in the air stream out of the air stream. Dampers shall not reduce the duct or the air transfer opening cross-sectional area. Dampers shall be installed so that the centerline of the damper depth or thickness is located in the centerline of the wall, partition or floor slab depth or thickness. Unless otherwise indicated, the installation details given in SMACNA Install Fire Damp HVAC and in manufacturer's instructions for fire dampers shall be followed. Acceptance testing of fire dampers shall be performed per paragraph Fire Damper Acceptance Test and NFPA 90A.

2.8.2.3 Splitters and Manual Balancing Dampers

Splitters and manual balancing dampers shall be furnished with accessible operating mechanisms. Splitters shall be operated by quadrant operators or 5 mm rod brought through the side of the duct with locking setscrew and bushing. One rod is required on splitters. Manual volume control dampers shall be operated by locking-type quadrant operators. Unless otherwise indicated, multileaf dampers shall be opposed blade type with maximum blade width of 300 mm . Access doors or panels shall be provided for all concealed damper operators and locking setscrews. Unless otherwise indicated, the locking-type quadrant operators for dampers, when installed on ducts to be thermally insulated, shall be provided with stand-off mounting brackets, bases, or adapters to provide clearance between the duct surface and the operator not less than the thickness of the insulation. Stand-off mounting items shall be integral with the operator or standard accessory of the damper manufacturer. Volume dampers shall be provided where indicated.

2.8.2.4 Air Deflectors and Branch Connections

Air deflectors shall be provided at duct mounted supply outlets, at takeoff or extension collars to supply outlets, at duct branch takeoff connections, and at 90 degree elbows, as well as at locations as indicated on the drawings or otherwise specified. Conical branch connections or 45 degree entry connections may be used in lieu of deflectors or extractors for branch connections. All air deflectors, except those installed in 90 degree elbows, shall be provided with an approved means of adjustment. Adjustment shall be made from easily accessible means inside the duct or from an adjustment with sturdy lock on the face of the duct. When installed on ducts to be thermally insulated, external adjustments shall be provided with stand-off mounting brackets, integral with the adjustment device, to provide clearance between the duct surface and the adjustment device not less than the thickness of the thermal insulation. Air deflectors shall be factory-fabricated units consisting of curved turning vanes or louver blades designed to provide uniform air distribution and change of direction with minimum turbulence or pressure loss. Air deflectors shall be factory or field assembled. Blade air deflectors, also called blade air extractors, shall be approved factory fabricated units consisting of equalizing grid and adjustable blade and lock. Adjustment shall be easily made from the face of the diffuser or by position adjustment and lock external to the duct. Stand-off brackets shall be provided on insulated ducts and are described herein. Fixed air deflectors, also called turning vanes, shall be provided in 90 degree elbows.

2.8.3 Duct Sleeves, Framed Prepared Openings, Closure Collars

2.8.3.1 Duct Sleeves

Duct sleeves shall be provided for round ducts 375 mm in diameter or less passing through floors, walls, ceilings, or roof, and installed during construction of the floor, wall, ceiling, or roof. Round ducts larger than 375 mm in diameter and square, rectangular, and oval ducts passing through floors, walls, ceilings, or roof shall be installed through framed prepared openings. The Contractor shall be responsible for the proper size and location of sleeves and prepared openings. Sleeves and framed openings are also required where grilles, registers, and diffusers are installed at the openings. Framed prepared openings shall be fabricated from 1.0 mm (20 gauge) galvanized steel, unless otherwise indicated. Where sleeves are installed in bearing walls or partitions, black steel pipe, ASTM A 53/A 53M, Schedule 20 shall be used. Sleeve shall provide 25 mm clearance between the duct and the sleeve or 25 mm clearance between the insulation and the sleeve for insulated ducts.

2.8.3.2 Framed Prepared Openings

Openings shall have 25 mm clearance between the duct and the opening or 25 mm clearance between the insulation and the opening for insulated ducts.

2.8.3.3 Closure Collars

Collars shall be fabricated of galvanized sheet metal not less than 100 mm wide, unless otherwise indicated, and shall be installed on exposed ducts on each side of walls or floors where sleeves or prepared openings are provided. Collars shall be installed tight against surfaces. Collars shall fit snugly around the duct or insulation. Sharp edges of the collar around insulated duct shall be ground smooth to preclude tearing or puncturing the insulation covering or vapor barrier. Collars for round ducts 375 mm in diameter or less shall be fabricated from 1.0 mm (20 gauge) galvanized steel. Collars for round ducts larger than 375 mm and square, and rectangular ducts shall be fabricated from 1.3 mm (18 gauge) galvanized steel. Collars shall be installed with fasteners on maximum 150 mm centers, except that not less than 4 fasteners shall be used.

2.8.4 Plenums and Casings for Field-Fabricated Units

2.8.4.1 Plenum and Casings

Plenums and casings shall be fabricated and erected as shown in SMACNA HVAC Duct Const Stds, as applicable. Unless otherwise indicated, system casing shall be constructed of not less than 1.6 mm (16 gauge) galvanized sheet steel. Cooling coil drain pans with 25 mm threaded outlet shall be provided to collect condensation from the cooling coils. Drain pans shall be fabricated of not lighter than 1.6 mm (16 gauge) steel, galvanized after fabrication or of 1.3 mm (18 gauge) corrosion-resisting sheet steel conforming to ASTM A 167, Type 304, welded and stiffened. Drain pans exposed to the atmosphere shall be thermally insulated to prevent condensation. Insulation shall be coated with a flame resistant waterproofing material. Separate drain pans shall be provided for each vertical coil section, and a separate drain line shall be provided for each pan. Pans shall be generously sized to ensure capture of entrained moisture on the downstream-air side of the coil. Openings in the casing, such as for piping connections, shall be sealed and covered to prevent air leakage. Water seal for the drain shall provide at least 500

Pa greater than the maximum negative pressure in the coil space.

2.8.4.2 Casing

Casings shall be terminated at the curb line and anchored by the use of galvanized angle iron sealed and bolted to the curb, as indicated in SMACNA HVAC Duct Const Stds.

2.8.4.3 Access Doors

Access doors shall be provided in each section of the casing. Door frames shall be welded in place, and each door shall be neoprene gasketed, hinged with minimum of two brass hinges, and fastened with a minimum of two brass tension fasteners operable from inside and outside of the casing. Where possible, doors shall be 900 x 450 mm located 450 mm above the floor. Where the space available will not accommodate doors of this size, doors as large as the space will accommodate shall be provided. Doors shall swing so that fan suction or pressure holds door in closed position, and shall be airtight. A push-button station to stop the supply fan shall be located inside the casing where indicated.

2.8.4.4 Factory-Fabricated Insulated Sheet Metal Panels

Factory-fabricated components may be used for field-assembled units, provided all requirements specified for field-fabricated plenums and casings are met. Panels shall be of modular design, pretested for structural strength, thermal control, condensation control, and acoustical control. Panel joints shall be sealed and insulated access doors shall be provided and gasketed to prevent air leakage. Panel construction shall be not less than 1.0 mm (20 gauge) galvanized sheet steel and shall be assembled with fasteners treated against corrosion. Standard length panels shall deflect not more than 13 mm under operation. Details of construction, including joint sealing, not specifically covered shall be as indicated in SMACNA HVAC Duct Const Stds. The plenums and casings shall be constructed to withstand the specified internal pressure of the air systems.

2.8.5 Diffusers, Registers, and Grilles

Units shall be factory-fabricated of steel, corrosion-resistant steel, or aluminum and shall distribute the specified quantity of air evenly over space intended without causing noticeable drafts, air movement faster than 0.25 m/s (50 fpm) in occupied zone, or dead spots anywhere in the conditioned area. Outlets for diffusion, spread, throw, and noise level shall be as required for specified performance. Performance shall be certified according to ASHRAE 70. Inlets and outlets shall be sound rated and certified according to ASHRAE 70. Sound power level shall be as indicated. Diffusers and registers shall be provided with volume damper with accessible operator, unless otherwise indicated; or if standard with the manufacturer, an automatically controlled device will be acceptable. Volume dampers shall be opposed blade type for all diffusers and registers. Where the inlet and outlet openings are located less than 2 m above the floor, they shall be protected by a grille or screen according to NFPA 90A.

2.8.5.1 Diffusers

Diffuser types shall be as indicated. Diffusers shall be provided with air deflectors of the type indicated. Air handling troffers or combination light and ceiling diffusers shall conform to the requirements of UL Elec Const Dir for the interchangeable use as cooled or heated air

supply diffusers or return air units. Ceiling mounted units shall be installed with rims tight against ceiling. Sponge rubber gaskets shall be provided between ceiling and surface mounted diffusers for air leakage control. Suitable trim shall be provided for flush mounted diffusers. Duct collar connecting the duct to diffuser shall be airtight and shall not interfere with volume controller. Return or exhaust units shall be similar to supply diffusers.

2.8.5.2 Registers and Grilles

Units shall be four-way directional-control type, except that return and exhaust registers may be fixed horizontal or vertical louver type similar in appearance to the supply register face. Registers shall be provided with sponge-rubber gasket between flanges and wall or ceiling. Wall supply registers shall be installed at least 150 mm below the ceiling unless otherwise indicated. Return and exhaust registers shall be located 150 mm above the floor unless otherwise indicated. Four-way directional control may be achieved by a grille face which can be rotated in 4 positions or by adjustment of horizontal and vertical vanes. Grilles shall be as specified for registers, without volume control damper.

2.8.6 Louvers

Louvers for installation in exterior walls which are associated with the air supply and distribution system shall be as specified in Section 10201 METAL WALL AND DOOR LOUVERS.

2.8.7 Air Vents, Penthouses, Goosenecks, and Gravity Vents

Air vents, penthouses, goosenecks, and gravity vents shall be fabricated from galvanized steel or aluminum sheets with galvanized or aluminum structural shapes. Air vents, penthouses, goosenecks, and gravity vents shall be provided with bird screen.

Gravity roof ventilators shall be constructed of heavy gauge aluminum or galvanized steel as specified. Bases shall be constructed so that the curb cap is 8 inches (204 mm) larger than the throat size. Base height shall be minimum 12 inches (305 mm) high.
Hood support members shall be constructed of galvanized steel and fastened so that the hood can be either removed completely from the base or hinged open. Birdscreens constructed of 1/2 inch (12 mm) galvanized steel mesh shall be mounted horizontally across the intake/discharge area of the hood.

Gravity vents shall be constructed as noted on the contract drawings except the base height shall be not less than described above. Provide gravity ventilators with cleanable air filters where indicated on the drawings. Gravity ventilators shall be painted.

2.8.8 Bird Screens and Frames

Bird screen shall be aluminum or stainless steel grid as recommended by the manufacturer. Frames shall be removable extruded aluminum or stainless steel.

2.9 AIR SYSTEMS EQUIPMENT

2.9.1 Fans

Fans shall be tested and rated according to AMCA 210 or DIN 24163-1,

DIN 24163-2 or DIN 24163-3. Fans may be connected to the motors either directly or indirectly with V-belt drive. V-belt drives shall be designed for not less than 120 percent of the connected driving capacity. Motors for V-belt drives shall be provided with adjustable rails or bases. Removable metal guards shall be provided for all exposed V-belt drives, and speed-test openings shall be provided at the center of all rotating shafts. Fans shall be provided with personnel screens or guards on both suction and supply ends, except that the screens need not be provided, unless otherwise indicated, where ducts are connected to the fan. Fan and motor assemblies shall be provided with vibration-isolation supports or mountings as indicated. Vibration-isolation units shall be standard products with published loading ratings. Each fan shall be selected to produce the capacity required at the fan static pressure indicated. Maximum allowed fan RPM shall be 1450.

2.9.1.1 Centrifugal Fans

Centrifugal fans shall be fully enclosed, single-width single-inlet, or double-width double-inlet. Impeller wheels shall be rigidly constructed, accurately balanced both statically and dynamically. Fan blades may be forward-curved, backward-curved or airfoil design in wheel sizes up to 750 mm . Fan blades for wheels over 750 mm in diameter shall be backward-curved or airfoil design. Fan wheels over 900 mm in diameter shall have overhung pulleys and a bearing on each side of the wheel. Fan wheels 900 mm or less in diameter may have one or more extra long bearings between the fan wheel and the drive. Bearings shall be sleeve type, self-aligning and self-oiling with oil reservoirs, or precision self-aligning roller or ball-type with accessible grease fittings or permanently lubricated type. Grease fittings shall be connected to tubing and serviceable from a single accessible point.

2.9.1.2 Axial Flow Fans

Axial flow fans shall be complete with drive components. Fan wheels shall have radially projecting blades and shall be dynamically balanced and keyed to the fan shaft. Fan bearings and drive shafts shall be enclosed and isolated from the air stream. Fan bearings shall be sealed against dust and dirt. Diffuser or straightening vanes shall be provided at the fan discharge to minimize turbulence and provide smooth discharge air flow.

2.9.1.3 Panel Type Power Wall Ventilators

Fans shall be centrifugal type. Fan shall be direct or V-belt drive type. Fans shall be furnished with wall mounting collar and other accessories indicated. Lubricated bearings shall be provided. Motor enclosures shall be drip-proof type, except as otherwise indicated on the drawings. Gravity back-draft dampers shall be provided where indicated.

2.9.1.4 Centrifugal Type Power Roof Ventilators

Fans shall be direct or V-belt driven with backward inclined, non-overloading wheel. Fans shall be provided with birdscreen, disconnect switch, gravity roof curb, and extended base. Motors enclosure shall be dripproof type, except as otherwise indicated on Drawings. Kitchen exhaust fans shall be centrifugal type according to UL 705 and fittes with V-belt drive, round hood, and windband upblast discharge configuration, motor and power transmission components located in outside positively air ventilated compartment. Use only lubricated bearings.

2.9.1.5 Ceiling Exhaust Fans

Suspended cabinet-type ceiling exhaust fans shall be centrifugal type, direct-driven. Fans shall have acoustically insulated housing. Integral backdraft damper shall be chatter-proof. The integral face grille shall be of egg-crate design or louver design. Fan motors shall be mounted on vibration isolators. Unit shall be provided with mounting flange for hanging unit from above. Fans shall be UL listed.

2.9.2 Coils

Coils shall be fin-and-tube type constructed of seamless copper tubes and aluminum fins mechanically bonded. When required, multiple tube supports shall be provided to prevent tube sag. Coils shall be rated and certified according to ARI 410.

2.9.2.1 Direct-Expansion Coils

Direct-expansion coils shall be suitable for the refrigerant involved. Refrigerant piping shall conform to ASTM B 280 and shall be cleaned, dehydrated and sealed. Suction headers shall be seamless copper tubing or seamless or resistance welded steel tube with copper connections. Supply headers shall consist of a distributor which shall distribute the refrigerant through seamless copper tubing equally to all circuits in the coil. Tubes shall be circuited to ensure minimum pressure drop and maximum heat transfer. Circuiting shall permit refrigerant flow from inlet to suction outlet without causing oil slugging or restricting refrigerant flow in coil. Each coil to be field installed shall be completely dehydrated and sealed at the factory upon completion of pressure tests.

2.9.2.2 Electric Coils

Electric resistance heaters shall be of the duct mounting type consisting of nickel-chromium resistor mounted on refractory material and a steel or aluminum frame for attachment to ductwork. Electric duct heater shall meet the requirements of UL, DIN, I.E.C., BS, or EN standards, and shall be provided with a built-in or surface-mounted high-limit thermostat. Electric duct heaters shall be interlocked electronically so that heaters cannot be energized unless the fan is running.

2.9.3 Air Filters

Filters shall be as specified hereinafter .

2.9.3.1 Extended Surface Pleated Panel Filters

Filters shall be 50 mm depth, sectional, disposable type of the size indicated and shall have an average efficiency of 25 to 30 percent when tested according to ASHRAE 52.1. Media shall be nonwoven cotton and synthetic fiber mat. A wire support grid bonded to the media shall be attached to a moisture resistant fiberboard frame. All four edges of the filter media shall be bonded to the inside of the frame to prevent air bypass and increase rigidity.

2.9.3.2 Extended Surface Nonsupported Pocket Filters

Filters shall be 750 mm depth, sectional, replaceable dry media type of the size indicated and shall have an average efficiency of 80 to 85 percent when tested according to ASHRAE 52.1. Filters shall be UL Class 1. Media

shall be fibrous glass, supported in the air stream by a wire or non-woven synthetic backing and secured to a galvanized steel metal header. Pockets shall not sag or flap at anticipated air flows. Each filter shall be installed with an extended surface pleated panel filter as a prefilter, as standard with manufacturer, in a factory preassembled, side access housing or a factory-made sectional frame bank, as indicated.

2.9.3.3 Sectional Cleanable Filters

Cleanable filters shall be 25 mm thick. Viscous adhesive shall be provided in 20 liter containers in sufficient quantity for 12 cleaning operations and not less than one liter for each filter section. Initial pressure drop for clean filters shall not exceed the applicable values listed in ASTM F 872.

2.9.3.4 Range and Griddle Hood Service

Filter shall be sectional, permanent, washable, all metallic media type, nominal 50 mm thick, with suitable metal frames, designed for extraction of grease from grease-laden air.

2.9.3.5 Kitchen Exhaust Hood Filters

Filters shall be solid baffle design, U.L. listed for grease removal and meeting provisions of NFPA 96. Filters shall be aluminum and made from curved baffle plates alternately arranged in a convex/concave position, partially overlapping each other. Grease laden air flows around the baffles and grease impinges on the baffle plates. Air pressure drop shall not exceed 0.20 inches wg at 150 feet per minute face velocity. Filters shall be manufactured by American Air Filter or equal.

2.9.3.6 Holding Frames

Frames shall be fabricated from not lighter than 1.6 mm (16 gauge) sheet steel with rust-inhibitor coating. Each holding frame shall be equipped with suitable filter holding devices. Holding frame seats shall be gasketed. All joints shall be airtight.

2.9.3.7 Filter Gauges

Filter gauges shall be dial type, diaphragm actuated draft and shall be provided for all filter stations, including those filters which are furnished as integral parts of factory fabricated air handling units. Gauges shall be at least 98 mm in diameter, shall have white dials with black figures, and graduations and shall have a minimum range of 0.25 kPa (1 inch of water) beyond the specified final resistance for the filter bank on which each gauge is applied. Each gauge shall incorporate a screw operated zero adjustment and shall be furnished complete with two static pressure tips with integral compression fittings, two molded plastic vent valves, two 1.5 m minimum lengths of 6.35 mm diameter aluminum tubing, and all hardware and accessories for gauge mounting.

2.10 AIR HANDLING UNITS

2.10.1 Factory-Fabricated Air Handling Units

Units shall be single-zone draw-through type as indicated. Units shall include fans, coils, airtight insulated casing, prefilters, secondary filter sections, adjustable V-belt drives, belt guards for externally

mounted motors, access sections where indicated. Vibration isolators shall be as indicated. Each air handling unit shall have physical dimensions suitable to fit space allotted to the unit and shall have the capacity indicated. Air handling unit shall have published ratings based on tests performed according to ARI 430.

2.10.1.1 Casings

Casing shall be designed and constructed with an integral insulated structural steel frame such that exterior panels are non-load bearing. Exterior panels shall be individually removable. Removal shall not affect the structural integrity of the unit. Casings shall be provided with inspection doors, access sections, and access doors as indicated. Inspection and access doors shall be insulated, fully gasketed, double-wall type. Doors shall be rigid and provided with heavy duty hinges and latches. Access Sections shall be according to paragraph AIR HANDLING UNITS. Drain pans shall be constructed water tight, treated to prevent corrosion, and designed for positive condensate drainage. When 2 or more cooling coils are used, with one stacked above the other, condensate from the upper coils shall not flow across the face of lower coils. Intermediate drain pans or condensate collection channels and downspouts shall be provided, as required to carry condensate to the unit drain pan out of the air stream and without moisture carryover. Drain pan shall be constructed so that the pan may be visually inspected easily including underneath the coil without removal of the coil and so that the pan may be physically cleaned completely and easily underneath the coil without removal of the coil. Air handling unit casing insulation shall be uniform over the entire casing. A latched and hinged inspection door, shall be provided in the fan and coil sections. Additional inspection doors, access doors and access sections shall be provided where indicated.

2.10.1.2 Heating Coils

Coils shall be provided as specified in paragraph AIR SYSTEMS EQUIPMENT, for types indicated.

2.10.1.3 Air Filters

Air filters shall be as specified in paragraph AIR SYSTEMS EQUIPMENT for types and thickness indicated.

2.10.1.4 Fans

Fans shall be double-inlet, centrifugal type with each fan in a separate scroll. Fans and shafts shall be dynamically balanced prior to installation into air handling unit, then the entire fan assembly shall be statically and dynamically balanced at the factory after it has been installed in the air handling unit. Fans shall be mounted on steel shafts accurately ground and finished. Bearings shall be permanently lubricated or lubricated type with lubrication fittings readily accessible at the drive side of the unit. Bearings may not be fastened directly to the unit sheet metal casing. Fans and scrolls shall be furnished with coating indicated. Fans shall be driven by a unit-mounted or a floor-mounted motor connected to fans by V-belt drive complete with belt guard for externally mounted motors. Belt drives shall be designed for not less than a 1.3 service factor based on motor nameplate rating. Motors for V-belt drives shall be provided with adjustable bases. Unit fan or fans shall be selected to produce the required capacity at the fan static pressure. The sound power level values shall be obtained according to AMCA 300, ASHRAE 68,

or ARI 260.

2.10.1.5 Access Sections and Filter/Mixing Boxes

Access sections shall be provided where indicated and shall be furnished with access doors as shown. Access sections and filter/mixing boxes shall be constructed in a manner identical to the remainder of the unit casing and shall be equipped with access doors. Mixing boxes shall be designed to minimize air stratification and to promote thorough mixing of the air streams.

2.10.1.6 Dampers

Dampers shall be as specified in paragraph CONTROLS.

2.11 FACTORY PAINTING

Units which are not of galvanized construction according to ASTM A 123/A 123M or ASTM A 924/A 924M shall be factory painted with a corrosion resisting paint finish. Internal and external ferrous metal surfaces shall be cleaned, phosphatized and coated with a paint finish which has been tested according to ASTM B 117, ASTM D 1654, and ASTM D 3359. Evidence of satisfactory paint performance for a minimum of 125 hours for units to be installed indoors and 500 hours for units to be installed outdoors shall be submitted. Rating of failure at the scribe mark shall be not less than 6, average creepage not greater than 3 mm.. Rating of the inscribed area shall not be less than 10, no failure. On units constructed of galvanized steel which have been welded, exterior surfaces of welds or welds that have burned through from the interior shall receive a final shop docket of zinc-rich protective paint according to ASTM D 520 Type I.

2.12 HEAT-COOL-UNIT (DIESEL-FIRED & EVAPORATIVE COOLED)

See Drawing CO-M-07 for details on these units.

PART 3 EXECUTION

3.1 INSTALLATION

Work shall be installed as shown and according to the manufacturer's diagrams and recommendations.

3.1.1 Piping

Pipe and fitting installation shall conform to the requirements of ASME B31.1. Pipe shall be cut accurately to measurements established at the jobsite, and worked into place without springing or forcing, completely clearing all windows, doors, and other openings. Cutting or other weakening of the building structure to facilitate piping installation will not be permitted without written approval. Pipe or tubing shall be cut square, shall have burrs removed by reaming, and shall permit free expansion and contraction without causing damage to the building structure, pipe, joints, or hangers. Changes in direction shall be made with fittings, except that bending of pipe 100 mm and smaller will be permitted, provided a pipe bender is used and wide sweep bends are formed. The centerline radius of bends shall not be less than 6 diameters of the pipe. Bent pipe showing kinks, wrinkles, flattening, or other malformations will not be accepted. Horizontal supply mains shall pitch down in the direction of flow as indicated. The grade shall be not less

than 2 mm in 1 m . Reducing fittings shall be used for changes in pipe sizes. Open ends of pipelines and equipment shall be capped or plugged during installation to keep dirt or other foreign materials out of the system. Pipe not otherwise specified shall be uncoated. Connections to appliances shall be made with malleable iron unions for steel pipe 65 mm or less in diameter, and with flanges for pipe 80 mm and larger. Connections between ferrous and copper piping shall be electrically isolated from each other with dielectric unions or flanges. All piping located in air plenums shall conform to NFPA 90A requirements. Pipe and fittings installed in inaccessible conduits or trenches under concrete floor slabs shall be welded.

3.1.1.1 Soldered Joints

Joints in copper tubing shall be cut square with ends reamed, and all filings and dust wiped from interior of pipe. Joints shall be soldered with 95/5 solder or brazed with silver solder applied and drawn through the full fitting length. Care shall be taken to prevent annealing of tube or fittings when making connections. Joints 65 mm and larger shall be made with heat uniformly around the entire circumference of the joint with a multi-flame torch. Connections in floor slabs shall be brazed. Excess solder shall be wiped from joint before solder hardens. Solder flux shall be liquid or paste form, non-corrosive and conform to ASTM B 813.

3.1.2 Supports

3.1.2.1 General

Hangers used to support piping 50 mm and larger shall be fabricated to permit adequate adjustment after erection while still supporting the load. Pipe guides and anchors shall be installed to keep pipes in accurate alignment, to direct the expansion movement, and to prevent buckling, swaying, and undue strain. Piping subjected to vertical movement when operating temperatures exceed ambient temperatures shall be supported by variable spring hangers and supports or by constant support hangers.

3.1.2.2 Seismic Requirements (Pipe Supports and Structural Bracing)

Structural steel required for reinforcement to properly support piping, headers, and equipment but not shown shall be provided under this section.

3.1.2.3 Pipe Hangers, Inserts and Supports

Pipe hangers, inserts, and supports shall conform to MSS SP-58 and MSS SP-69 except as modified herein.

a. Hangers: Type 3 shall not be used on insulated piping.

b. C-Clamps: Type 19 and 23 C-clamps shall be torqued per MSS SP-69 and have both locknuts and retaining devices, furnished by the manufacturer. Field-fabricated C-clamp bodies or retaining devices are not acceptable.

c. Angle Attachments: Type 20 attachments used on angles shall conform to International Building Code requirements and ASTM standards and channels shall be furnished with an added malleable-iron heel plate or adapter.

d. Hangers shall conform to International Building Code

requirements and ASTM standards.

e. Hangers shall conform to International Building Code requirements and ASTM standards shall be used on all insulated pipe 100 mm and larger when the temperature of the medium is above 15.5 degrees C. Type 39 saddles shall be welded to the pipe.

f. Type 40 shields shall be used on all insulated pipes less than 100 mm .

g. Insulated Pipe: Insulation on horizontal pipe shall be continuous through hangers for hot and cold piping. Other requirements on insulated pipe are specified in Section 15080 THERMAL INSULATION FOR MECHANICAL SYSTEMS.

3.1.3 Pipe Sleeves

Sleeves shall not be installed in structural members except where indicated or approved. Rectangular and square openings shall be as detailed. Each sleeve shall extend through its respective wall, floor, or roof, and shall be cut flush with each surface. Pipes passing through concrete or masonry wall or concrete floors or roofs shall be provided with pipe sleeves fitted into place at the time of construction. Unless otherwise indicated, sleeves shall provide a minimum of 6 mm all-around clearance between bare pipe and sleeves or between jacket over insulation and sleeves. Sleeves in bearing walls, waterproofing membrane floors, and wet areas shall be steel pipe or cast iron pipe. Sleeves in non-bearing walls, floors, or ceilings may be steel pipe, cast iron pipe, galvanized sheet metal with lock-type longitudinal seam and of the metal thickness indicated, or moisture resistant fiber or plastic. Except in pipe chases or interior walls, the annular space between pipe and sleeve or between jacket over insulation and sleeve, in non-fire rated walls, shall be sealed as indicated and specified in Section 07900 JOINT SEALING. Pipes passing through wall waterproofing membrane shall be sleeved as specified above, and a waterproofing clamping flange shall be installed as indicated.

3.1.3.1 Roof and Floor Sleeves

Pipes passing through roof or floor waterproofing membrane shall be installed through a 17-ounce copper sleeve or a 0.8 mm thick aluminum sleeve, each within an integral skirt or flange. Flashing sleeve shall be suitably formed, and skirt or flange shall extend not less than 200 mm from the pipe and shall be set over the roof or floor membrane in a troweled coating of bituminous cement. Unless otherwise shown, the flashing sleeve shall extend up the pipe a minimum of 50 mm above highest floor level or a minimum of 250 mm above the roof. The annular space between the flashing sleeve and the bare pipe or between the flashing sleeve and the metal-jacket-covered insulation shall be sealed as indicated. Pipes up to and including 250 mm in diameter passing through roof or floor waterproofing membrane may be installed through a cast iron sleeve with caulking recess, anchor lugs, flashing clamp device, and pressure ring with brass bolts. Waterproofing membrane shall be clamped into place and sealant shall be placed in the caulking recess. In lieu of a waterproofing clamping flange and caulking and sealing of annular space between pipe and sleeve or conduit and sleeve, a modular mechanical type sealing assembly may be installed. Seals shall consist of interlocking synthetic rubber links shaped to continuously fill the annular space between the pipe/conduit and sleeve with corrosion protected carbon steel bolts, nuts, and pressure plates. Links shall be loosely assembled with

bolts to form a continuous rubber belt around the pipe with a pressure plate under each bolt head and each nut. After the seal assembly is properly positioned in the sleeve, tightening of the bolt shall cause the rubber sealing elements to expand and provide a watertight seal between the pipe/conduit and the sleeve. Each seal assembly shall be sized as recommended by the manufacturer to fit the pipe/conduit and sleeve involved.

3.1.3.2 Escutcheons

Escutcheons shall be provided at finished surfaces where exposed piping, bare or insulated, passes through floors, walls, or ceilings except in boiler, utility, or equipment rooms. Where sleeves project slightly from floors, special deep-type escutcheons shall be used. Escutcheons shall be secured to pipe or pipe covering.

3.1.4 Condensate Drain Lines

Water seals shall be provided in the condensate drain from all units except room through the wall A/C units. The depth of each seal shall be 50 mm plus 0.1 mm for each Pa, of the total static pressure rating of the unit to which the drain is connected. Water seals shall be constructed of 2 tees and an appropriate U-bend with the open end of each tee plugged. Pipe cap or plug cleanouts shall be provided where indicated. Drains indicated to connect to the sanitary waste system shall be connected by an indirect waste fitting. Air conditioner drain lines shall be insulated as specified in Section 15080 THERMAL INSULATION FOR MECHANICAL SYSTEMS.

3.1.5 Equipment and Installation

Frames and supports shall be provided for tanks, compressors, pumps, valves, air handling units, fans, coils, dampers, and other similar items requiring supports. Air handling units shall be floor mounted or ceiling hung, as indicated. The method of anchoring and fastening shall be as detailed. Floor-mounted equipment, unless otherwise indicated, shall be set on not less than 150 mm concrete pads or curbs doweled in place. Concrete foundations for circulating pumps shall be heavy enough to minimize the intensity of the vibrations transmitted to the piping and the surrounding structure, as recommended in writing by the pump manufacturer. In lieu of a concrete pad foundation, a concrete pedestal block with isolators placed between the pedestal block and the floor may be provided. The concrete foundation or concrete pedestal block shall be of a mass not less than three times the weight of the components to be supported. Lines connected to the pump mounted on pedestal blocks shall be provided with flexible connectors. Foundation drawings, bolt-setting information, and foundation bolts shall be furnished prior to concrete foundation construction for all equipment indicated or required to have concrete foundations. Concrete for foundations shall be as specified in Section 03300 CAST-IN-PLACE STRUCTURAL CONCRETE.

3.1.6 Access Panels

Access panels shall be provided for concealed valves, vents, controls, dampers, and items requiring inspection or maintenance. Access panels shall be of sufficient size and located so that the concealed items may be serviced and maintained or completely removed and replaced. Access panels shall be as specified in Seciton 05500 MISCELLANEOUS METALS.

3.1.7 Flexible Connectors

Pre-insulated flexible connectors and flexible duct shall be attached to other components in accordance with the latest printed instructions of the manufacturer to ensure a vapor tight joint. Hangers, when required to suspend the connectors, shall be of the type recommended by the connector or duct manufacturer and shall be provided at the intervals recommended.

3.1.8 Sleeved and Framed Openings

For non-fire rated penetrations, the space shall be packed as specified in Section 07900 JOINT SEALING.

3.1.9 Metal Ductwork

Installation shall be according to SMACNA HVAC Duct Const Stds unless otherwise indicated. Duct supports for sheet metal ductwork shall be according to SMACNA HVAC Duct Const Stds, unless otherwise specified. Friction beam clamps indicated in SMACNA HVAC Duct Const Stds shall not be used. Risers on high velocity ducts shall be anchored in the center of the vertical run to allow ends of riser to move due to thermal expansion. Supports on the risers shall allow free vertical movement of the duct. Supports shall be attached only to structural framing members and concrete slabs. Supports shall not be anchored to metal decking unless a means is provided and approved for preventing the anchor from puncturing the metal decking. Where supports are required between structural framing members, suitable intermediate metal framing shall be provided. Where C-clamps are used, retainer clips shall be provided.

3.1.9.1 Light Duty Corrosive Exhaust Ductwork

Light duty corrosive exhaust ductwork shall be PVC plastisol coated galvanized steel with PVC coating on interior and exterior surfaces. Provide where indicated.

3.1.10 Kitchen Exhaust Ductwork

3.1.10.1 Ducts Conveying Smoke and Grease Laden Vapors

Ducts conveying smoke and grease laden vapors shall conform to requirements of NFPA 96. Seams, joints, penetrations, and duct-to-hood collar connections shall have a liquid tight continuous external weld. Duct material shall be minimum 1.3 mm (18 gauge), Type 304L or 316L, stainless steel. Duct construction shall include external perimeter angle sized in accordance with SMACNA HVAC Duct Const Stds, except welded joint reinforcement shall be on maximum of 600 mm centers; continuously welded companion angle bolted flanged joints with flexible ceramic cloth gaskets where indicated; pitched to drain at low points; welded pipe coupling-plug drains at low points; welded fire protection and detergent cleaning penetration; steel framed, stud bolted, and flexible ceramic cloth gasketed cleaning access provisions where indicated. Angles, pipe couplings, frames, bolts, etc., shall be same material as that specified for the duct unless indicated otherwise.

3.1.10.2 Exposed Ductwork

Exposed ductwork shall be fabricated from minimum 1.3 mm (18 gauge), Type 304L or 316L, stainless steel with continuously welded joints and seams. Ducts shall be pitched to drain at hoods and low points indicated. Surface

finish shall match hoods.

3.1.10.3 Concealed Ducts Conveying Moisture Laden Air

Concealed ducts conveying moisture laden air shall be fabricated from minimum 1.3 mm (18 gauge), Type 300 series, stainless steel. Joints shall be continuously welded, brazed, or soldered to be liquid tight. Duct shall be pitched to drain at points indicated. Transitions to other metals shall be liquid tight, companion angle bolted and gasketed.

3.1.11 Dust Control

To prevent the accumulation of dust, debris and foreign material during construction, temporary dust control protection shall be provided. The distribution system (supply and return) shall be protected with temporary seal-offs at all inlets and outlets at the end of each day's work. Temporary protection shall remain in place until system is ready for startup.

3.1.12 Insulation

Thickness and application of insulation materials for ductwork, piping, and equipment shall be according to Section 15080 THERMAL INSULATION FOR MECHANICAL SYSTEMS. Outdoor air intake ducts and plenums shall be externally insulated up to the point where the outdoor air reaches the conditioning unit.

3.1.13 Duct Test Holes

Holes with closures or threaded holes with plugs shall be provided in ducts and plenums as indicated or where necessary for the use of pitot tube in balancing the air system. Extensions, complete with cap or plug, shall be provided where the ducts are insulated.

3.1.14 Power Roof Ventilator Mounting

Foamed 13 mm thick, closed-cell, flexible elastomer insulation shall cover width of roof curb mounting flange. Where wood nailers are used, holes shall be pre-drilled for fasteners.

3.1.15 Power Transmission Components Adjustment

V-belts and sheaves shall be tested for proper alignment and tension prior to operation and after 72 hours of operation at final speed. Belts on drive side shall be uniformly loaded, not bouncing. Alignment of direct driven couplings shall be to within 50 percent of manufacturer's maximum allowable range of misalignment.

3.2 FIELD PAINTING AND IDENTIFICATION SYSTEMS

3.2.1 Identification Tags

Identification tags made of brass, engraved laminated plastic, or engraved anodized aluminum, indicating service and item number shall be installed on all valves and dampers. Tags shall be 35 mm minimum diameter and marking shall be stamped or engraved. Indentations shall be black for reading clarity. Tags shall be attached to valves with No. 12 AWG, copper wire,chrome-plated beaded chain or plastic straps designed for that purpose.

3.2.2 Finish Painting and Pipe Color Code Marking

Finish painting of items only primed at the factory, surfaces not specifically noted otherwise, and color code marking for piping shall be as specified in Section 09900 PAINTS AND COATINGS.

3.3 DAMPER ACCEPTANCE TEST

All fire dampers and smoke dampers shall be operated under normal operating conditions, prior to the occupancy of a building to determine that they function properly. Fire dampers equipped with fusible links shall be tested by having the fusible link cut in place. Dynamic fire dampers shall be tested with the air handling and distribution system running. All fire dampers shall be reset with the fusible links replaced after acceptance testing. To ensure optimum operation and performance, the damper must be installed so it is square and free from racking.

3.4 TESTING, ADJUSTING, AND BALANCING

Testing, adjusting, and balancing shall be as specified in Section 15990 TESTING, ADJUSTING, AND BALANCING OF HVAC SYSTEMS. Testing, adjusting, and balancing shall begin only when the air supply and distribution, including controls, has been completed, with the exception of performance tests.

3.5 PERFORMANCE TESTS

After testing, adjusting, and balancing has been completed as specified, each system shall be tested using approved test procedures as a whole to see that all items perform as integral parts of the system and temperatures and conditions are evenly controlled throughout the building. Corrections and adjustments shall be made as necessary to produce the conditions indicated or specified. Capacity tests and general operating tests shall be conducted by an experienced engineer. Tests shall cover a period of not less than 3 days for each system and shall demonstrate that the entire system is functioning according to the specifications. Coincidental chart recordings shall be made at points indicated on the drawings for the duration of the time period and shall record the temperature at space thermostats or space sensors, the humidity at space humidistats or space sensors and the ambient temperature and humidity in a shaded and weather protected area.

3.6 CLEANING AND ADJUSTING

Pipes shall be cleaned free of scale and thoroughly flushed of foreign matter. Inside of air handling units, ducts, plenums, and casing shall be thoroughly cleaned of debris and blown free of small particles of rubbish and dust and then shall be vacuum cleaned before installing outlet faces. Equipment shall be wiped clean, with traces of oil, dust, dirt, or paint spots removed. Temporary filters shall be provided prior to startup of all fans that are operated during construction, and new filters shall be installed after all construction dirt has been removed from the building, and the ducts, plenums, casings, and other items specified have been vacuum cleaned. System shall be maintained in this clean condition until final acceptance. Bearings shall be properly lubricated with oil or grease as recommended by the manufacturer. Belts shall be tightened to proper tension. Control valves and other miscellaneous equipment requiring adjustment shall be adjusted to setting indicated or directed. Fans shall be adjusted to the speed indicated by the manufacturer to meet specified conditions.

3.7 FIELD TRAINING

The Contractor shall conduct a training course for operating and maintenance personnel as designated by the Government. Training shall be provided for a period of 40 hours of normal working time and shall start after the system is functionally complete but prior to the performance tests. The field instruction shall cover all of the items contained in the approved Operating and Maintenance Instructions.

-- End of Section --

SECTION 15950

HEATING, VENTILATING AND AIR CONDITIONING (HVAC) CONTROL SYSTEMS

PART 1 GENERAL

1.1 REFERENCES

The publications listed below form a part of this specification to the extent referenced. The publications are referred to in the text by basic designation only.

AIR MOVEMENT AND CONTROL ASSOCIATION INTERNATIONAL(AMCA)

AMCA 500-D	(1998) Laboratory Methods of Testing Dampers for Rating

NATIONAL ELECTRICAL MANUFACTURERS ASSOCIATION (NEMA)

NEMA 250	(2003) Enclosures for Electrical Equipment (1000 Volts Maximum)

NATIONAL FIRE PROTECTION ASSOCIATION (NFPA)

NFPA 90A	(2002) Installation of Air Conditioning and Ventilating Systems

UNDERWRITERS LABORATORIES (UL)

UL 268A	(1998; Rev thru Apr 2003) Smoke Detectors for Duct Application
UL 508	(1999; Rev thru Dec 2003) Industrial Control Equipment
UL 555S	(1999; Rev thru Apr 2003) Smoke Dampers

1.2 SUBMITTALS

Items with a "G" designation require Government approval; items not having a "G" designation are for information only. The following is submitted in accordance with Section 01335 SUBMITTAL PROCEDURES FOR DESIGN/BUILD PROJECT. It is included in the Design Analysis for this project.

SD-03 Product Data

HVAC Control System; G AED

Six copies of a list of service organizations qualified to service the HVAC control system. The list shall include the service organization name, address, technical point of contact and telephone number, and contractual point of contact and telephone number.

Equipment Compliance Booklet; G AED

An HVAC control system equipment compliance booklet (ECB) in

indexed booklet form with numbered tabs separating the information on each device. It shall consist of, but not be limited to, data sheets and catalog cuts which document compliance of all devices and components with the specifications. The ECB shall be indexed in alphabetical order by the unique identifiers. Devices and components which do not have unique identifiers shall follow the devices and components with unique identifiers and shall be indexed in alphabetical order according to their functional name. The ECB shall include a bill of materials for each HVAC control system. The bill of materials shall function as the table of contents for the ECB and shall include the device's unique identifier, device function, manufacturer, model/part/catalog number used for ordering, and tab number where the device information is located in the ECB.

Performance Verification Test Procedures; G AED

Six copies of the HVAC control system performance verification test procedures, in indexed booklet form, 7 days before the Contractor's scheduled test dates. The performance verification test procedures shall refer to the devices by their unique identifiers as shown, shall explain, step-by-step, the actions and expected results that will demonstrate that the HVAC control system performs in accordance with the sequences of operation. An HVAC control system performance verification test equipment list shall be included that lists the equipment to be used during performance verification testing. The list shall include manufacturer name, model number, equipment function, the date of the latest calibration, and the results of the latest calibration.

Training Course Requirements; G AED

Six copies of HVAC control system training course material 7 days prior to the scheduled start of the training course. The training course material shall include the operation manual, maintenance and repair manual, and paper copies of overheads used in the course. An HVAC control system training course, in outline form, with a proposed time schedule. Approval of the planned training schedule shall be obtained from the Government at least 14 days prior to the start of the training.

SD-06 Test Reports

Commissioning Report; G AED

Copies of the HVAC control system commissioning report, in indexed booklet form, within 30 days after completion of the system commissioning. The commissioning report shall include data collected during the HVAC control system commissioning and shall follow the format of the commissioning procedures. The commissioning report shall include all controller and time clock checksheets with final values listed for all parameters, setpoints, P, I, D setting constants, calibration data for all devices, and results of adjustments.

Performance Verification Test; G AED

Six copies of the HVAC control system performance verification test report, in indexed booklet form, within 7 days after

completion of the test. The HVAC control system performance verification test report shall include data collected during the HVAC control system performance verification test. The original copies of data gathered during the performance verification test shall be turned over to the Government after Government approval of the test results.

SD-10 Operation and Maintenance Data

Operation Manual; G AED

Maintenance and Repair Manual; G AED

Provide copies of the HVAC control system operation manual and HVAC control system maintenance and repair manual for each HVAC control system before the date scheduled for the training course.

Operation and Maintenance Manuals shall be as required in Section 01060: SPECIAL CLAUSE entitled OPERATION AND MAINTENANCE (O&M) DATA FOR EQUIPMENT AND SYSTEMS, and include the additional requirements as specified hereinafter. In the event of a conflict, the more detailed requirement shall apply.

1.3 GENERAL REQUIREMENTS

1.3.1 Verification of Dimensions

The Contractor shall become familiar with all details of the work, shall verify all dimensions in the field, and shall advise the Government of any discrepancy before performing any work.

1.3.2 Drawings

Because of the small scale of the drawings, it is not possible to indicate all offsets, fittings, and accessories that may be required. The Contractor shall investigate the mechanical, electrical, and finish conditions that could affect the work to be performed, shall arrange such work accordingly, and shall furnish all work necessary to meet such conditions.

1.4 DELIVERY AND STORAGE

1.5 OPERATION MANUAL

An HVAC control system operation manual for each HVAC control system, in indexed booklet form, shall be provided. The operation manual shall include the HVAC control system sequence of operation, and procedures for the HVAC system start-up, operation and shut-down. The operation manual shall include as-built HVAC control system detail drawings. The operation manual shall include the as-built controller configuration checksheets, the as-built time clock configuration checksheet, the HVAC control system front panel description, the procedures for changing HVAC system controller setpoints, the procedures for gaining manual control of processes, the time clock manufacturer's manual control of processes, the time clock manufacturer's operation manual, and the controller manufacturer's operation manual.

a. The HVAC control system front panel description shall explain the meaning and use of the lights, switches, gauges, and controller

displays located in the front panel. Each light, switch, gauge, and display described shall be numbered and referenced to a drawing of the front panel.

b. The procedures for changing HVAC system controller setpoints shall describe the step-by-step procedures required to change: the process variable setpoints of controllers, the alarm setpoints of controllers, the controller bias settings, and controller setpoint reset schedules.

c. The procedures for gaining manual control of processes shall describe step-by-step procedures required to gain manual control of devices and manually adjust their positions.

1.6 MAINTENANCE AND REPAIR MANUAL

An HVAC control system maintenance and repair manual for each HVAC control system, in indexed booklet form in hardback binders, shall be provided. The maintenance and repair manual shall include the routine maintenance checklist, a recommended repair methods list, a list of recommended maintenance and repair tools, the qualified service organization list, the as-built commissioning procedures and report, the as-built performance verification test procedures and report, and the as-built equipment data booklet (EDB).

a. The routine maintenance checklist shall be arranged in a columnar format. The first column shall list all devices listed in the equipment compliance booklet (ECB), the second column shall state the maintenance activity or state no maintenance required, the third column shall state the frequency of the maintenance activity, and the fourth column for additional comments or reference.

b. The recommended repair methods list shall be arranged in a columnar format and shall list all devices in the equipment compliance booklet (ECB) and state the guidance on recommended repair methods, either field repair, factory repair, or whole-item replacement.

c. The as-built equipment data booklet (EDB) shall include the equipment compliance booklet (ECB) and all manufacturer supplied user manuals and information.

d. If the operation manual and the maintenance and repair manual are provided in a common volume, they shall be clearly differentiated and separately indexed.

PART 2 PRODUCTS

2.1 MATERIAL AND EQUIPMENT

Material and equipment shall be standard products of a manufacturer regularly engaged in the manufacturing of such products which are of a similar material, design and workmanship. The standard products shall have been in satisfactory commercial or industrial use for 2 years prior to bid opening. The 2-year use shall include applications of equipment and materials under similar circumstances and of similar size. The 2 years experience must be satisfactorily completed by a product which has been

sold or is offered for sale on the commercial market through advertisements, manufacturers' catalogs, or brochures. Products having less than a 2-year field service record will be acceptable if a certified record of satisfactory field operation, for not less than 6000 hours exclusive of the manufacturer's factory tests, can be shown. The equipment items shall be supported by a service organization. The Contractor shall submit a certified list of qualified permanent service organizations and qualifications. These service organizations shall be reasonably convenient to the equipment on a regular and emergency basis during the warranty period.

2.2 GENERAL EQUIPMENT REQUIREMENTS

2.2.1 Electrical and Electronic Devices

All electrical, electronic, and electro-pneumatic devices not located within an HVAC control panel shall have a NEMA Type 1 enclosure in accordance with NEMA 250 unless otherwise shown.

2.2.2 Ambient Temperature Limits

Ambient Temperature Actuators and positive positioners, and transmitters shall operate within temperature limit ratings of 5 to 60 degrees C. All panel-mounted instruments shall operate within limit ratings of 2 to 50 degrees C and 10 percent to 95 percent relative humidity, noncondensing. All devices installed outdoors shall operate within limit ratings of minus 40 to plus 65 degrees C.

2.3 MATERIALS

2.3.1 Wiring

2.3.1.1 Terminal Blocks

Terminal blocks shall be insulated, modular, feed-through, clamp style with recessed captive screw-type clamping mechanism, shall be suitable for rail mounting, and shall have end plates and partition plates for separation or shall have enclosed sides.

2.3.1.2 Control Wiring for 240-Volt Circuits

Control wiring for 240-volt circuits shall be 18 AWG minimum, stranded copper and shall be rated for 300-volt service.

2.3.1.3 Wiring for 240-Volt Circuits

Wiring for 240-volt circuits shall be 18 AWG minimum, stranded copper and shall be rated for 600-volt service.

2.3.1.4 Nonconducting Wiring Duct

Nonconducting wiring duct in control panels shall have wiring duct in control panels shall have slotted sides, snap-on duct covers, have slotted sides, snap-on duct covers, fittings for connecting ducts, mounting clips for securing ducts, and wire-retaining clips.

2.3.1.5 Transformers

Step-down transformers shall be utilized where control equipment operates

at lower than line circuit voltage. Transformers, other than transformers in bridge circuits, shall have primaries wound for the voltage available and secondaries wound for the correct control circuit voltage. Transformers shall be sized so that the connected load is 80 percent of the rated capacity or less. Transformers shall conform to UL 508.

2.4 ACTUATORS

Actuators shall be electric or electronic as shown and shall be provided with mounting and connecting hardware. Actuators shall fail to their spring-return positions on signal or power failure. The actuator stroke shall be limited in the direction of power stroke by an adjustable stop. Actuators shall have a visible position indicator. Actuators shall smoothly open or close the devices to which they are applied and shall have a full stroke response time of 100 to 150 seconds or less. Electric or electronic actuators operating in series shall have an auxiliary actuator driver. Electric or electronic actuators used in sequencing applications shall have an adjustable operating range and start point.

2.5 DAMPERS

2.5.1 Damper Assembly

A single damper section shall have blades no longer than 1.2 m and shall be no higher than 1.8 m. Maximum damper blade width shall be 203 mm. Larger sizes shall be made from a combination of sections. Dampers shall be steel, or other materials where shown. Flat blades shall be made rigid by folding the edges. All blade-operating linkages shall be within the frame so that blade-connecting devices within the same damper section will not be located directly in the air stream. Damper axles shall be 13 mm (minimum) plated steel rods supported in the damper frame by non corrosive bearings. Pressure drop through dampers shall not exceed 10 Pa at 5 m/s in the wide-open position. Frames shall not be less than 35 mm in width. Dampers shall be tested in accordance with AMCA 500-D or EN 1751.

2.5.1.1 Damper Types

Dampers shall be parallel blade type.

2.5.2 Outside-Air, Return-Air, and Relief-Air Dampers

The dampers shall be provided where shown. Blades shall have interlocking edges and shall be provided with compressible seals at points of contact. The channel frames of the dampers shall be provided with jamb seals to minimize air leakage. Dampers shall not leak in excess of 102 L/s per square meter at 1,000 Pa (gauge) static pressure when closed. Dampers shall be rated at not less than 10 m/s air velocity.

2.5.3 Smoke Dampers

Smoke-damper and actuator assembly required per NFPA 90A shall meet the Class II leakage requirements of UL 555S. Dampers shall be rated at not less than 10 m/s air velocity.

2.5.4 Damper End Switches

Each end switch shall be a hermetically-sealed switch with a trip lever and over-travel mechanism. The switch enclosure shall be suitable for mounting on the duct exterior and shall permit setting the position of the trip

lever that actuates the switch. The trip lever shall be aligned with the damper blade.

2.6 DUCT SMOKE DETECTORS

Duct smoke detectors shall conform to the requirements of UL 268A. Duct smoke detectors shall have perforated sampling tubes extended into the air duct. Detector circuitry shall be mounted in a metallic enclosure exterior to the duct. Detectors shall have manual reset. Detectors shall be rated for air velocities that include air flows between 2.5 and 20 m/s . Detectors shall be powered from the HVAC control panel. Detectors shall have two sets of normally open alarm contacts and two sets of normally closed alarm contacts. Detectors shall be connected to the building fire alarm panel for alarm initiation. A remote annunciation lamp and accessible remote reset switch shall be provided for duct detectors that are mounted eight feet or more above the finished floor and for detectors that are not readily visible. Remote lamps and switches as well as each affected fan unit shall be properly identified in etched rigid plastic placards.

2.7 THERMOSTATS

Thermostat ranges shall be selected so that the setpoint is adjustable without tools between plus or minus 5 degrees C of the setpoint shown. Thermostats shall be electronic or electric.

2.7.1 Nonmodulating Room Thermostats

Contacts shall be single-pole double-throw (SPDT), hermetically sealed, and wired to identified terminals. Maximum differential shall be 2.75 degrees C. Room thermostats shall be enclosed with separate locking covers (guards). Thermostats shall have manual switches as required by the application.

2.7.2 Microprocessor-Based Room Thermostats

Microprocessor-based thermostats shall have built-in keypads for scheduling of day and night temperature settings. When out of the scheduling mode, thermostats shall have continuous display of time, with AM and PM indicator, continuous display of day of week, and either continuous display of room temperature with display of temperature setpoint on demand, or continuous display of temperature setpoint with display of room temperature on demand. In the programmable mode, the display shall be used for interrogating time program ON-OFF setpoints for all 7 days of the week. The time program shall allow 2 separate temperature-setback intervals per day. The thermostats shall have a means for temporary and manual override of the program schedule, with automatic program restoration on the following day. Thermostats shall have a replaceable battery to maintain the timing and maintain the schedule in memory for 1 year in the event of a power outage. Maximum differential shall be 1 degree C.

2.7.3 Modulating Room Thermostats

Modulating room thermostats shall have either one output signal, two output signals operating in unison, or two output signals operating in sequence, as required for the application. Each thermostat shall have an adjustable throttling range of 2 to 4 degrees C for each output. Room thermostats shall be enclosed with separate locking covers (guard

2.8 CONTROL DEVICES AND ACCESSORIES

Control device and accessory input impedance shall not exceed 250 ohms.

2.8.1 Function Modules

Function modules shall accept mAdc analog input signals to produce mAdc analog output signals or contact output signals. Modules shall have zero and span adjustments for analog outputs, and setpoint adjustments for contact outputs. Module output span accuracy shall be plus or minus 1 percent of input span. Modules shall be rail-mounted as shown. Power consumption shall be not greater than 5 watts.

2.8.1.1 Minimum-Position Switch and Temperature-Setpoint Device

Minimum-position switch and temperature-setpoint device shall accept a 1000 ohms potentiometer input and shall produce a steady analog output. In temperature setpoint applications the potentiometer shall be single-turn, suitable for wall mounting, enclosed in a locking metal or heavy duty plastic enclosure and shall have a graduated dial corresponding to the range of the setpoint adjustment. In a minimum position switch application the potentiometer shall be mounted on or internal to the minimum position switch. The device shall have its input signal electrically or optically isolated from output.

2.8.2 Relays

Relays shall be 2-pole, double-throw (2PDT)and shall have an enclosed 220-Vac coil with 8 pin blade connectors, and a matching rail-mounted socket. Power consumption shall not be greater than 3 watts.

2.9 PILOT LIGHTS AND MANUAL SWITCHES

Pilot lights and switches shall be rectangular devices arranged in a horizontal matrix as shown. Momentary switches shall be non-illuminated. Interlocking switches shall have separately illuminated sections. Split legend lights shall have separately illuminated sections. Device illumination shall be by light-emitting diode or neon lamp.

2.10 HVAC SYSTEM CONTROL PANELS

2.10.1 Panel Assembly

The control panel shall be factory assembled and shipped to the job site as a single unit. The panel shall be fabricated as shown, and the devices shall be mounted as shown. Each panel shall be fabricated as a bottom-entry connection point for control-system electric power, control-system main air source, control-system wiring, pneumatic tubing, interconnection of control systems, interconnection of starters and external shutdown devices. Each panel shall have an operating temperature rise of not greater than 11 degrees C above an ambient temperature of 38 degrees C.

2.10.2 Panel Electrical Requirements

Each control panel shall be powered by nominal 220 volts ac, terminating at the panel on terminal blocks. Instrument cases shall be grounded. Interior panel, interior door, and exterior panel enclosure shall be grounded.

2.10.3 Enclosure

The enclosure for each panel shall be a NEMA 12 single-door wall-mounted box conforming to NEMA 250, with continuous hinged and gasketed exterior door with print pocket and key lock, continuous hinged interior door, interior back panel, and ventilation louvers in back surface as shown. Inside finish shall be white enamel, and outside finish shall be gray primer over phosphatized surfaces.

2.10.4 Mounting and Labeling

Controllers, pilot lights, switches, IP's, and pressure gauge shall be mounted on the interior door as shown. Fuses and duplex outlet shall be mounted on the interior of the cabinet. All other components housed in the panel shall be mounted on the interior back panel surface of the enclosure, behind the door on rails as shown. Controllers and gauges mounted on the front of the inner door shall be identified by a plastic or metal nameplate as shown that is mechanically attached to the panel. Function modules, relays, timeclocks, and other devices interior to the panel shall be identified by a plastic or metal nameplate that is mechanically attached to the panel. The nameplate shall have the inscription as shown. Lettering shall be cut or stamped into the nameplate to a depth of not less than 0.4 mm, and shall show a contrasting color, produced by filling with enamel or lacquer or by the use of a laminated material. Painting of lettering directly on the surface of the interior door or panel is not permitted.

2.10.5 Wiring

2.10.5.1 Panel Wiring

Interconnections Wiring shall be installed in wiring ducts in such a way that devices can be added or replaced without disturbing wiring that is not affected by the change. Wiring to all devices shall have a 100 mm wiring loop in the horizontal wiring duct at each wiring connection. There shall be no wiring splices within the control panel. All interconnections required for power or signals shall be made on device terminals or panel terminal blocks, with not more than two wires connected to a terminal.

2.10.5.2 Panel Terminal Blocks

Terminal blocks shall be arranged in groups as shown. Instrument signal grounds at the same ground reference level shall end at a grounding terminal for connection to a common ground point. Wiring-shield grounds at the same reference level shall end at a grounding terminal for connection to a common ground point. Grounding terminal blocks shall be identified by reference level.

2.10.5.3 Wiring Identification

All wiring connected to time clocks and function modules shall be identified by function and polarity with full word identifiers, i.e., process variable input, remote setpoint input and control output.

PART 3 EXECUTION

3.1 GENERAL INSTALLATION CRITERIA

The HVAC control system shall be installed and ready for operation, as

specified and shown. Dielectric isolation shall be provided where dissimilar metals are used for connection and support. Penetrations through and mounting holes in the building exterior shall be made watertight. The HVAC control system installation shall provide clearance for control system maintenance by maintaining access space between coils, access space to mixed-air plenums, and other access space required to calibrate, remove, repair, or replace control system devices. The control system installation shall not interfere with the clearance requirements for mechanical installation shall not interfere with the clearance requirements for mechanical and electrical system maintenance.

3.1.1 Device Mounting Criteria

Devices mounted in or on piping or ductwork, on building surfaces, in mechanical/electrical spaces, or in occupied space ceilings shall be installed in accordance with manufacturer's recommendations and as shown. Control devices to be installed in piping and ductwork shall be provided with all required gaskets, flanges, thermal compounds, insulation, piping, fittings, and manual valves for shutoff, equalization, purging, and calibration. Strap-on temperature sensing elements shall not be used except as specified.

3.1.2 Wiring Criteria

Wiring external to control panels, including low-voltage wiring, shall be installed in metallic raceways. Wiring shall be installed without splices between control devices and HVAC control panels. Cables and conductors shall be tagged at both ends, with the identifier shown on the shop drawings, in accordance with the requirements of Section 16402 INTERIOR DISTRIBUTION SYSTEM.

3.2 CONTROL SYSTEM INSTALLATION

3.2.1 Damper Actuators

Actuators shall not be mounted in the air stream. Multiple actuators operating a common damper shall be connected to a common drive shaft. Actuators shall be installed so that their action shall seal the damper to the extent required to maintain leakage at or below the specified rate and shall move the blades smoothly.

3.2.2 Room-Instrument Mounting

Room instruments, such as wall mounted thermostats, shall be mounted 1.5 m above the floor unless otherwise noted. Temperature setpoint device shall be recess mounted.

3.2.3 Smoke Detectors

Duct smoke detectors shall be provided in supply and return air ducts in accordance with NFPA 90A .

3.2.4 Manual Emergency Fan Shutdown Switches

Manual emergency fan shutdown switches shall be provided for air distribution fans in accordance with NFPA 90A. Switches shall be the manual-reset type. Switches shall be located and mounted in an accessible manner, approximately 1.2 m above the finished floor. Switches shall be properly identified in etched rigid plastic placards.

3.3 CONTROL SEQUENCES OF OPERATION

3.3.1 System Requirements

Control sequences are indicated on the drawings.

3.4 BALANCING, COMMISSIONING, AND TESTING

3.4.1 Coordination with HVAC System Balancing

Commissioning of the control system, except for tuning of controllers, shall be performed prior to or simultaneous with HVAC system balancing. The Contractor shall tune the HVAC control system after all air-system and hydronic-system balancing has been completed, minimum damper positions set and a report has been issued.

3.4.2 Control System Calibration, Adjustments, and Commissioning

Control system commissioning shall be performed for each HVAC system, using test plans and procedures previously approved by the Government . The Contractor shall provide all personnel, equipment, instrumentation, and supplies necessary to perform commissioning and testing of the HVAC control system. All instrumentation and controls shall be calibrated and the specified accuracy shall be verified using test equipment with calibration traceable to NIST standards. Wiring shall be tested for continuity and for ground, open, and short circuits. Tubing systems shall be tested for leaks. Mechanical control devices shall be adjusted to operate as specified. HVAC control panels shall be pretested off-site as a functioning assembly ready for field connections, calibration, adjustment, and commissioning of the operational HVAC control system. Written notification of any planned commissioning or testing of the HVAC Control systems shall be given to the Government at least 14 calendar days in advance.

3.4.3 Performance Verification Test

The Contractor shall demonstrate compliance of the HVAC control system with the contract documents. Using test plans and procedures previously approved by the Government, the Contractor shall demonstrate all physical and functional requirements of the project. The performance verification test shall show, step-by-step, the actions and results demonstrating that the control systems perform in accordance with the sequences of operation. The performance verification test shall not be started until after receipt by the Contractor of written permission by the Government, based on Government approval of the commissioning report and completion of balancing. The tests shall not be conducted during scheduled seasonal off-periods of base heating and cooling systems.

3.4.4 Posted and Panel Instructions

Posted and panel instructions, showing the final installed conditions, shall be provided for each system. The posted instructions shall consist of half-size laminated drawings and shall include the control system schematic, equipment schedule, ladder diagram, sequence of operation, panel arrangement drawings, wiring diagram, and valve and damper schedules. The posted instructions shall be permanently affixed, by mechanical means, to a

wall near the control panel. Panel instructions shall consist of laminated letter-size sheets and shall include a routine maintenance checklist and controller configuration check sheets with final configuration record for each controller. Panel instructions and one copy of the operation and maintenance manuals, previously described herein, shall be placed inside each control panel.

3.5 TRAINING

3.5.1 Training-Course Requirements

A training course shall be conducted for 2 operating staff members designated by the Government. The training period, for a total of 40 hours of normal working time, shall be conducted within 30 days after successful completion of the performance verification test. The training course shall be conducted at the project site. Audiovisual equipment and 2 sets of all other training materials and supplies shall be provided. A training day is defined as 8 hours of classroom instruction, including two 15-minute breaks and excluding lunchtime, Monday through Friday, during the daytime shift in effect at the training facility.

3.5.2 Training-Course Content

For guidance in planning the required instruction, the Contractor shall assume that attendees will have a high school education or equivalent, and are familiar with HVAC systems. The training course shall cover all of the material contained in the operating and maintenance instructions, the layout and location of each HVAC control panel, the layout of one of each type of unitary equipment and the locations of each, the location of each system-control device external to the panels, the location of the compressed-air station, preventive maintenance, troubleshooting, diagnostics, calibration, adjustment, commissioning, tuning, and repair procedures. Typical systems and similar systems may be treated as a group, with instruction on the physical layout of one such system. The results of the performance verification test and the calibration, adjustment and commissioning report shall be presented as benchmarks of HVAC control-system performance by which to measure operation and maintenance effectiveness.

-- End of Section --

SECTION 15990

TESTING, ADJUSTING, AND BALANCING OF HVAC SYSTEMS

PART 1 GENERAL

1.1 REFERENCES

The publications listed below form a part of this specification to the extent referenced. The publications are referred to in the text by basic designation only.

ASSOCIATED AIR BALANCE COUNCIL (AABC)

AABC MN-1	(2002) National Standards for Total System Balance

NATIONAL ENVIRONMENTAL BALANCING BUREAU (NEBB)

NEBB TABES	(2005) Procedural Standards for Testing, Adjusting, Balancing of Environmental Systems

SHEET METAL AND AIR CONDITIONING CONTRACTORS' NATIONAL ASSOCIATION (SMACNA)

SMACNA HVACTAB	(2002, 3rd Ed) HVAC Systems - Testing, Adjusting and Balancing

1.2 SUBMITTALS

Government approval is required for submittals with a "G" designation; submittals not having a "G" designation are for information only. When used, a designation following the "G" designation identifies the office that will review the submittal for the Government. Submit the following in accordance with Section 01330 SUBMITTAL PROCEDURES

SD-03 Product Data

TAB Related HVAC Submittals; G AED

A list of the TAB Related HVAC Submittals no later than 7 days after the approval of the TAB Specialist.

TAB Procedures; G AED

Proposed procedures for TAB, submitted with the TAB Schematic Drawings and Report Forms.

Calibration; G AED

List of each instrument to be used during TAB, stating calibration requirements required or recommended by both the TAB Standard and the instrument manufacturer and the actual calibration history of the instrument, submitted with the TAB Procedures. The calibration history shall include dates

calibrated, the qualifications of the calibration laboratory, and the calibration procedures used.

Systems Readiness Check; G AED

Proposed date and time to begin the Systems Readiness Check no later than 7 days prior to the start of the Systems Readiness Check.

TAB Execution; G AED

Proposed date and time to begin field measurements, making adjustments, etc., for the TAB Report, submitted with the Systems Readiness Check Report.

TAB Verification; G AED

Proposed date and time to begin the TAB Verification, submitted with the TAB Report.

SD-06 Test Reports

Design Review Report; G AED

A copy of the Design Review Report, no later than 7 days after approval of the TAB Firm and the TAB Specialist.

Systems Readiness Check; G AED

A copy of completed checklists for each system, each signed by the TAB Specialist, at least 7 days prior to the start of TAB Execution. All items in the Systems Readiness Check Report shall be signed by the TAB Specialist and shall bear the seal of the Professional Society or National Association used as the TAB Standard.

TAB Report; G AED

Three copies of the completed TAB Reports, no later that 7 days after the execution of TAB. All items in the TAB Report shall be signed by the TAB Specialist and shall bear the seal of the Professional Society or National Association used as the TAB Standard.

TAB Verification Report; G AED

Three copies of the completed TAB Verification Report, no later that 7 days after the execution of TAB Verification. All items in the TAB Verification Report shall be signed by the TAB Specialist and shall bear the seal of the Professional Society or National Association used as the TAB Standard.

1.3 TAB STANDARD

TAB shall be performed in accordance with the requirements of the standard under which the TAB Firm's qualifications are approved, i.e., AABC MN-1, NEBB TABES, or SMACNA HVACTAB unless otherwise specified herein. All recommendations and suggested practices contained in the TAB Standard shall be considered mandatory. The provisions of the TAB Standard, including

checklists, report forms, etc., shall, as nearly as practical, be used to satisfy the Contract requirements. The TAB Standard shall be used for all aspects of TAB, including qualifications for the TAB Firm and Specialist and calibration of TAB instruments. Where the instrument manufacturer calibration recommendations are more stringent than those listed in the TAB Standard, the manufacturer's recommendations shall be adhered to. All quality assurance provisions of the TAB Standard such as performance guarantees shall be part of this contract. For systems or system components not covered in the TAB Standard, TAB procedures shall be developed by the TAB Specialist. Where new procedures, requirements, etc., applicable to the Contract requirements have been published or adopted by the body responsible for the TAB Standard used, the requirements and recommendations contained in these procedures and requirements shall be considered mandatory.

1.4 TAB SPECIALIST RESPONSIBILITIES

All TAB work specified herein and in related sections shall be performed under the direct guidance of the TAB Specialist.

PART 2 PRODUCTS (Not Applicable)

PART 3 EXECUTION

3.1 DESIGN REVIEW

The TAB Specialist shall review the Contract Plans and Specifications and advise the Government of any deficiencies that would prevent the HVAC systems from effectively operating in accordance with the sequence of operation specified or prevent the effective and accurate TAB of the system. The TAB Specialist shall provide a Design Review Report individually listing each deficiency and the corresponding proposed corrective action necessary for proper system operation.

3.2 TAB RELATED HVAC SUBMITTALS

The TAB Specialist shall prepare a list of the submittals from the Contract Submittal Register that relate to the successful accomplishment of all HVAC TAB. The submittals identified on this list shall be accompanied by a letter of approval signed and dated by the TAB Specialist when submitted. The TAB Specialist shall also ensure that the location and details of ports, terminals, connections, etc., necessary to perform TAB are identified on the submittals.

3.3 TAB SCHEMATIC DRAWINGS AND REPORT FORMS

A schematic drawing showing each system component, including balancing devices, shall be provided for each system. Each drawing shall be accompanied by a copy of all report forms required by the TAB Standard used for that system. Where applicable, the acceptable range of operation or appropriate setting for each component shall be included on the forms or as an attachment to the forms. The schematic drawings shall identify all testing points and cross reference these points to the report forms and procedures.

3.4 TESTING, ADJUSTING, AND BALANCING

3.4.1 TAB Procedures

Step by step procedures for each measurement required during TAB Execution shall be provided. The procedures shall be oriented such that there is a separate section for each system. The procedures shall include measures to ensure that each system performs as specified in all operating modes, interactions with other components (such as exhaust fans, kitchen hoods, relief vents, etc.) and systems, and with all seasonal operating differences, diversity, simulated loads, and pressure relationships required.

3.4.2 Systems Readiness Check

The TAB Specialist shall inspect each system to ensure that it is complete, including installation and operation of controls, and that all aspects of the facility that have any bearing on the HVAC systems, including installation of ceilings, walls, windows, doors, and partitions, are complete to the extent that TAB results will not be affected by any detail or touch-up work remaining. The TAB Specialist shall also verify that all items such as ductwork and piping ports, terminals, connections, etc., necessary to perform TAB shall be complete during the Systems Readiness Check.

3.4.3 Preparation of TAB Report

Preparation of the TAB Report shall begin only when the Systems Readiness Report has been approved. The Report shall be oriented so that there is a separate section for each system. The Report shall include a copy of the appropriate approved Schematic Drawings and TAB Related Submittals, such as pump curves, fan curves, etc., along with the completed report forms for each system. The operating points measured during successful TAB Execution and the theoretical operating points listed in the approved submittals shall be marked on the performance curves and tables. Where possible, adjustments shall be made using an "industry standard" technique which would result in the greatest energy savings, such as adjusting the speed of a fan instead of throttling the flow. Any deficiencies outside of the realm of normal adjustments and balancing during TAB Execution shall be noted along with a description of corrective action performed to bring the measurement into the specified range. If, for any reason, the TAB Specialist determines during TAB Execution that any Contract requirement cannot be met, the TAB Specialist shall immediately provide a written description of the deficiency and the corresponding proposed corrective action necessary for proper system operation to the Government.

3.4.4 TAB Verification

The TAB Specialist shall recheck ten percent of the measurements listed in the Tab Report and prepare a TAB Verification Report. The measurements selected for verification and the individuals that witness the verification will be selected by the Government's Representative (COR). The measurements will be recorded in the same manner as required for the TAB Report. All measurements that fall outside the acceptable operating range specified shall be accompanied by an explanation as to why the measurement does not correlate with that listed in the TAB Report and a description of corrective action performed to bring the measurement into the specified range. The TAB Specialist shall update the original TAB report to reflect any changes or differences noted in the TAB verification report and submit

the updated TAB report. If over 20 percent of the measurements selected by the COR for verification fall outside of the acceptable operating range specified, the COR will select an additional ten percent for verification. If over 20 percent of the total tested (including both test groups) fall outside of the acceptable range, the TAB Report shall be considered invalid and all contract TAB work shall be repeated beginning with the Systems Readiness Check.

3.4.5 Marking of Setting

Following approval of TAB Verification Report, the setting of all HVAC adjustment devices including valves, splitters, and dampers shall be permanently marked by the TAB Specialist so that adjustment can be restored if disturbed at any time.

3.4.6 Identification of Test Ports

The TAB Specialist shall permanently and legibly identify the location points of duct test ports. If the ductwork has exterior insulation, the identification shall be made on the exterior side of the insulation. All penetrations through ductwork and ductwork insulation shall be sealed to prevent air leakage or to maintain integrity of vapor barrier.

-- End of Section --

SECTION 16050

BASIC ELECTRICAL MATERIALS AND METHODS

PART 1 GENERAL

1.1 REFERENCES

The publications listed below form a part of this specification to the extent referenced. The publications are referred to in the text by the basic designation only.

Unless noted otherwise, all material used shall be in compliance with the requirements of the applicable German (DIN) Standards. In the event DIN Standard material is unavailable, contractor may then select comparable British Standard (BS), or Underwriters Laboratories Inc. (UL) listed material. Equipment enclosure types shall be in compliance with the National Electrical Manufacturer's Association (NEMA) or the International Electro-Technical Committee (IEC) standards. Material and equipment installed under this contract shall be for the appropriate application.

ASTM INTERNATIONAL (ASTM)

ASTM D 709	(2000) Laminated Thermosetting Materials

U.S. NATIONAL ARCHIVES AND RECORDS ADMINISTRATION (NARA)

29 CFR 1910.147	Control of Hazardous Energy (Lock Out/Tag Out)

INSTITUTE OF ELECTRICAL AND ELECTRONICS ENGINEERS (IEEE)

IEEE Std 100	(1997) IEEE Standard Dictionary of Electrical and Electronics Terms
IEEE C2	(2002) National Electrical Safety Code

NATIONAL ELECTRICAL MANUFACTURERS ASSOCIATION (NEMA)

NEMA C57.12.28	(1999) Pad-Mounted Equipment - Enclosure Integrity
NEMA ICS 6	(1993; R 2001) Industrial Control and Systems, Enclosures

NATIONAL FIRE PROTECTION ASSOCIATION (NFPA)

NFPA 70	(2005) National Electrical Code

1.2 DEFINITIONS

a. Unless otherwise specified or indicated, electrical and electronics terms used in these specifications, and on the drawings, shall be as defined in IEEE Std 100 .

b. The technical sections referred to herein are those specification sections that describe products, installation procedures, and

equipment operations and that refer to this section for detailed description of submittal types.

c. The technical paragraphs referred to herein are those paragraphs in PART 2 - PRODUCTS and PART 3 - EXECUTION of the technical sections that describe products, systems, installation procedures, equipment, and test methods.

1.3 ELECTRICAL CHARACTERISTICS

Electrical characteristics for this project shall be 15 kV primary, three phase, 50 Hz, and 380/220 volts secondary, three phase, four wire. Final connections to the power distribution system shall be made by the Contractor as directed by the Government.

1.4 SUBMITTALS

Government approval is required for submittals with a "G" designation; submittals not having a "G" designation are for information only. When used, a designation following the "G" designation identifies the office that will review the submittal for the Government. The following shall be submitted in accordance with Section 01330 SUBMITTAL PROCEDURES:

SD-02 Shop Drawings; G

Submit drawings a minimum of 594 by 841 mm in size using a minimum scale of one mm per 100 mm, except as specified otherwise. Include wiring diagrams and installation details of equipment indicating proposed location, layout and arrangement, control panels, accessories, piping, ductwork, and other items that must be shown to ensure a coordinated installation. Wiring diagrams shall identify circuit terminals and indicate the internal wiring for each item of equipment and the interconnection between each item of equipment. Drawings shall indicate adequate clearance for operation, maintenance, and replacement of operating equipment devices.

SD-03 Product Data; G

Submittals for each manufactured item shall be current manufacturer's descriptive literature of cataloged products, equipment drawings, diagrams, performance and characteristic curves, and catalog cuts. Handwritten and typed modifications and other notations not part of the manufacturer's preprinted data will result in the rejection of the submittal. Should manufacturer's data require supplemental information for clarification, the supplemental information shall be submitted as specified for certificates of compliance.

Manufacturer's Instructions: Where installation procedures or part of the installation procedures are required to be in accordance with manufacturer's instructions, submit printed copies of those instructions prior to installation. Installation of the item shall not proceed until manufacturer's instructions are received. Failure to submit manufacturer's instructions shall be cause for rejection of the equipment or material.

1.5 SIGNAGE

Text to be in English and Afghan wherever signage is required.

1.6 QUALITY ASSURANCE

1.6.1 Material and Equipment Qualifications

Provide materials and equipment that are products of manufacturers regularly engaged in the production of such products which are of equal material, design and workmanship. Products shall have been in satisfactory commercial or industrial use for 2 years prior to bid opening. The 2-year period shall include applications of equipment and materials under similar circumstances and of similar size. The product shall have been on sale on the commercial market through advertisements, manufacturers' catalogs, or brochures during the 2-year period. Where two or more items of the same class of equipment are required, these items shall be products of a single manufacturer; however, the component parts of the item need not be the products of the same manufacturer unless stated in the technical section.

1.6.2 Regulatory Requirements

Equipment, materials, installation, and workmanship shall be in accordance with the mandatory and advisory provisions of NFPA 70.

1.6.3 Alternative Qualifications

Products having less than a 2-year field service record will be acceptable if a certified record of satisfactory field operation for not less than 6000 hours, exclusive of the manufacturers' factory or laboratory tests, is furnished.

1.6.4 Service Support

The equipment items shall be supported by service organizations which are reasonably convenient to the equipment installation in order to render satisfactory service to the equipment on a regular and emergency basis during the warranty period of the contract.

1.6.5 Manufacturer's Nameplate

Each item of equipment shall have a nameplate bearing the manufacturer's name, address, model number, and serial number securely affixed in a conspicuous place; the nameplate of the distributing agent will not be acceptable.

1.6.6 Modification of References

In each of the publications referred to herein, consider the advisory provisions to be mandatory, as though the word, "shall" had been substituted for "should" wherever it appears. Interpret references in these publications to the "authority having jurisdiction," or words of similar meaning, to mean the Government .

1.6.7 Material and Equipment Manufacturing Date

Products manufactured more than 3 years prior to date of delivery to site shall not be used, unless specified otherwise.

1.7 POSTED OPERATING INSTRUCTIONS

Provide for each system and principal item of equipment as specified in the technical sections for use by operation and maintenance personnel. The operating instructions shall include the following:

a. Wiring diagrams, control diagrams, and control sequence for each principal system and item of equipment.

b. Start up, proper adjustment, operating, lubrication, and shutdown procedures.

c. Safety precautions.

d. The procedure in the event of equipment failure.

e. Other items of instruction as recommended by the manufacturer of each system or item of equipment.

Print or engrave operating instructions and frame under glass or in approved laminated plastic. Post instructions where directed. For operating instructions exposed to the weather, provide weather-resistant materials or weatherproof enclosures. Operating instructions shall not fade when exposed to sunlight and shall be secured to prevent easy removal or peeling.

1.8 NAMEPLATES

ASTM D 709. Provide laminated plastic nameplates for each panelboard, equipment enclosure, relay, switch, and device; as specified in the technical sections or as indicated on the drawings. Each nameplate inscription shall identify the function and, when applicable, the position.

1.9 WARNING SIGNS

Provide warning signs for the enclosures of electrical equipment including substations, pad-mounted transformers, pad-mounted switches, generators, and switchgear having a nominal rating exceeding 600 volts. Signs shall be written in both Afghani and English.

When the enclosure integrity of such equipment is specified to be in accordance with NEMA C57.12.28, such as for pad-mounted transformers, provide self-adhesive warning signs on the outside of the high voltage compartment door(s). Sign shall have legend "DANGER HIGH VOLTAGE". The word "DANGER" shall be in white letters on a red background and the words "HIGH VOLTAGE" shall be in black letters on a white background.

When such equipment is guarded by a fence, mount signs on the fence. Provide metal signs having nominal dimensions of 355 by 255 mm with the legend "DANGER HIGH VOLTAGE KEEP OUT" printed in three lines of nominal 75 mm high white letters on a red and black field.

1.10 CABLE TAGS IN MANHOLES, HANDHOLES, AND VAULTS

Provide tags for each cable or wire located in manholes, handholes, and vaults. The first position on the tag shall denote the voltage. The second through sixth positions on the tag shall identify the circuit. The next to last position shall denote the phase of the circuit and shall

include the Greek "phi" symbol. The last position shall denote the cable size.

1.11 ELECTRICAL REQUIREMENTS

Electrical installations shall conform to IEEE C2, NFPA 70, and requirements specified herein.

1.11.1 Motors and Equipment

Provide electrical components of mechanical equipment, such as motors, motor starters, control or push-button stations, float or pressure switches, solenoid valves, and other devices functioning to control mechanical equipment, including control wiring and conduit for circuits rated 100 volts or less, to conform with the requirements of the section covering the mechanical equipment. Extended voltage range motors shall not be permitted. The interconnecting power wiring and conduit, control wiring rated 120 volts (nominal) and conduit, the motor control equipment forming a part of motor control centers, and the electrical power circuits shall be provided under Division 16.

Motors, controllers, integral disconnects, and contactors shall conform to Section 16402, "Interior Distribution System" . Extended voltage range motors shall not be permitted. Control voltage for controllers and contactors shall not exceed 220 volts nominal. When motors and equipment furnished are larger than sizes indicated, the cost of additional electrical service and related work shall be included under the section that specified that motor or equipment. Where fuse protection is specifically recommended by the equipment manufacturer, provide fused switches in lieu of non-fused switches indicated.

1.11.2 Wiring and Conduit

Provide internal wiring for components of packaged equipment as an integral part of the equipment. Provide power wiring and conduit for field-installed equipment, and motor control equipment forming part of motor control centers or switchgear assemblies, the conduit and wiring connecting such centers, assemblies, or other power sources to equipment under Section 16402, "Interior Distribution System." Control wiring and conduit shall be provided under, and conform to the requirements of the section specifying the associated equipment.

1.11.3 New Work

Provide electrical components of mechanical equipment, such as motors, motor starters (except starters/controllers which are indicated as part of a motor control center), control or push-button stations, float or pressure switches, solenoid valves, integral disconnects, and other devices functioning to control mechanical equipment, as well as control wiring and conduit for circuits rated 100 volts or less, to conform with the requirements of the section covering the mechanical equipment. Extended voltage range motors shall not be permitted. The interconnecting power wiring and conduit, control wiring rated 120 volts (nominal) and conduit, the motor control equipment forming a part of motor control centers, and the electrical power circuits shall be provided under Division 16, except internal wiring for components of packaged equipment shall be provided as an integral part of the equipment. When motors and equipment furnished are larger than sizes indicated, provide any required changes to the electrical service as may be necessary and related work as a part of the work for the

section specifying that motor or equipment.

1.11.4 Three-Phase Motor Protection

Provide controllers for motors rated 1-hp and above with electronic phase-voltage monitors designed to protect motors from phase-loss, undervoltage, and overvoltage. Provide protection for motors from immediate restart by a time adjustable restart relay.

1.12 INSTRUCTION TO GOVERNMENT

Where specified in the technical sections, furnish the services of competent instructors to give full instruction to designated Government personnel in the adjustment, operation, and maintenance of the specified systems and equipment, including pertinent safety requirements as required. Instructors shall be thoroughly familiar with all parts of the installation and shall be trained in operating theory as well as practical operation and maintenance work. Instruction shall be given during the first regular work week after the equipment or system has been accepted and turned over to the Government for regular operation. The number of man-days (8 hours per day) of instruction furnished shall be as specified in the individual section. When more than 4 man-days of instruction are specified, use approximately half of the time for classroom instruction. Use other time for instruction with equipment or system. When significant changes or modifications in the equipment or system are made under the terms of the contract, provide additional instructions to acquaint the operating personnel with the changes or modifications.

1.13 LOCKOUT REQUIREMENTS

Provide disconnecting means capable of being locked out for machines and other equipment to prevent unexpected startup or release of stored energy in accordance with 29 CFR 1910.147. Mechanical isolation of machines and other equipment shall be in accordance with requirements of Division 15, "Mechanical."

PART 2 PRODUCTS

Where locally produced materials that meet requirements are available, use these before imported materials.

PART 3 EXECUTION

3.1 PAINTING OF EQUIPMENT

3.1.1 Factory Applied

Electrical equipment shall have factory-applied painting systems which shall, as a minimum, meet the requirements of NEMA ICS 6 corrosion-resistance test and the additional requirements specified in the technical sections .

3.1.2 Field Applied

Paint electrical equipment as required to match finish of adjacent surfaces or to meet the indicated or specified safety criteria. Painting shall be as specified in Section 09900, "Paints and Coatings".

3.2 NAMEPLATE MOUNTING

Provide number, location, and letter designation of nameplates as indicated.

3.3 WARNING SIGN MOUNTING

Provide the number of signs required to be readable from each accessible side.

3.4 CABLE TAG INSTALLATION

Install cable tags in each manhole, handhole, and vault as specified, including each splice. Install cable tags over the fireproofing, if any, and locate the tags so that they are clearly visible without disturbing any cabling or wiring in the manholes, handholes, and vaults.

-- End of Section --

SECTION 16070

SEISMIC PROTECTION FOR ELECTRICAL EQUIPMENT

PART 1 GENERAL

1.1 REFERENCES

The publications listed below form a part of this specification to the extent referenced. The publications are referred to in the text by basic designation only.

Unless noted otherwise, all material used shall be in compliance with the requirements of the applicable German (DIN) Standards. In the event DIN Standard material is unavailable, contractor may then select comparable British Standard (BS), or Underwriters Laboratories Inc. (UL) listed material. Equipment enclosure types shall be in compliance with the National Electrical Manufacturer's Association (NEMA) or the International Electro-Technical Committee (IEC) standards. Material and equipment installed under this contract shall be for the appropriate application.

ASTM INTERNATIONAL (ASTM)

ASTM E 580	(2002) Application of Ceiling Suspension Systems for Acoustical Tile and Lay-in Panels in Areas Requiring Moderate Seismic Restraint

U.S. ARMY CORPS OF ENGINEERS (USACE)

TI 809-04	(1998) Seismic Design for Buildings

UNDERWRITERS LABORATORIES (UL)

UL 1570	(1995; Rev thru Feb 1999) Fluorescent Lighting Fixtures
UL 1571	(1995; Rev thru Feb 1999) Incandescent Lighting Fixtures

1.2 MATERIAL AUTHENTICATION DATA INCLUDED IN DESIGN ANALYSIS

Government approval is required for submittals with a "G" designation; submittals not having a "G" designation are for information only. When used, a designation following the "G" designation identifies the office that will review the submittal for the Government. The following shall be submitted in accordance with Section 01330 SUBMITTAL PROCEDURES:

SD-03 Product Data

Lighting Fixtures in Buildings; G
Equipment Requirements; G

Copies of the design calculations with the detail drawings. Calculations shall be by a professional engineer and shall verify the capability of structural members to which bracing is attached

for carrying the load from the brace.

Contractor Designed Bracing; G

Copies of the Design Calculations with the Drawings. Calculations shall be approved by a, Professional Engineer. Calculations shall verify the capability of structural members to which bracing is attached for carrying the load from the brace.

1.3 SYSTEM DESCRIPTION

1.3.1 General Requirements

The requirements for seismic protection measures described in this section shall be applied to the electrical equipment and systems listed below.

1.3.2 Electrical Equipment

Electrical equipment shall include the following items to the extent required on the drawings or in other sections of these specifications:

Air Handling Units
Panelboards
Light Fixtures

1.3.3 Electrical Systems

The following electrical systems shall be installed as required on the drawings and other sections of these specifications and shall be seismically protected in accordance with this specification: Communication Tower

1.3.4 Contractor Designed Bracing

The Contractor shall design the bracing in accordance with TI 809-04 and additional data furnished by the Government. Resistance to lateral forces induced by earthquakes shall be accomplished without consideration of friction resulting from gravity loads. TI 809-04 uses parameters for the building, not for the equipment in the building; therefore, corresponding adjustments to the formulas shall be required. Loadings determined using TI 809-04 are based on strength design; therefore, the AISC LRFP specifications shall be used for the design. The bracing for the following electrical equipment and systems shall be developed by the Contractor: Light fixtures, air handling units, communication tower.

1.3.5 Conduits Requiring No Special Seismic Restraints

Seismic restraints may be omitted from electrical conduit less than 64 mm trade size. All other interior conduit, shall be seismically protected as specified.

1.4 EQUIPMENT REQUIREMENTS

1.4.1 Rigidly Mounted Equipment

The following specific items of equipment to be furnished under this contract shall be constructed and assembled to withstand the seismic forces specified in TI 809-04, Chapter 10. Each item of rigid electrical equipment shall be entirely located and rigidly attached on one side only

of a building expansion joint. Piping, electrical conduit, etc., which cross the expansion joint shall be provided with flexible joints that are capable of accommodating displacements equal to the full width of the joint in both orthogonal directions.

PART 2 PRODUCTS

2.1 LIGHTING FIXTURE SUPPORTS

Lighting fixtures and supports shall conform to UL 1570 or UL 1571 as applicable.

2.2 SWAY BRACING MATERIALS

Sway bracing materials (e.g. rods, plates, rope, angles, etc.) shall be as specified in TI 809-04.

PART 3 EXECUTION

3.1 SWAY BRACES FOR CONDUIT

Conduit shall be braced as for an equivalent weight pipe.

3.2 LIGHTING FIXTURES IN BUILDINGS

Lighting fixtures and supports shall conform to the following:

3.2.1 Pendant Fixtures

Pendant fixtures shall conform to the requirements of TI 809-04, Chapter 10.

3.2.2 Ceiling Attached Fixtures

3.2.2.1 Recessed Fluorescent Fixtures

Recessed fluorescent individual or continuous-row mounted fixtures shall be supported by a seismic-resistant suspended ceiling support system built in accordance with ASTM E 580. Seismic protection for the fixtures shall conform to the requirements of TI 809-04, Chapter 10. Recessed lighting fixtures not over 25 kg in weight may be supported by and attached directly to the ceiling system runners using screws or bolts, number and size as required by the seismic design. Fixture accessories, including louvers, diffusers, and lenses shall have lock or screw attachments.

3.2.2.2 Surface-Mounted Fluorescent Fixtures

Surface-mounted fluorescent individual or continuous-row fixtures shall be attached to a seismic-resistant ceiling support system built in accordance with ASTM E 580. Seismic protection for the fixtures shall conform to the requirements of TI 809-04, Chapter 10.

3.2.3 Assembly Mounted on Outlet Box

A supporting assembly, that is intended to be mounted on an outlet box, shall be designed to accommodate mounting features on 100 mm boxes, plaster rings, and fixture studs.

3.2.4 Wall-Mounted Emergency Light Unit

Attachments for wall-mounted emergency light units shall be designed and secured for the worst expected seismic disturbance at the site.

3.2.5 Lateral Force

Structural requirements for light fixture bracing shall be in accordance with TI 809-04.

-- End of Section --

SECTION 16175

LOCAL CONTROL PANELS FOR SYSTEMS

PART 1 GENERAL

1.1 SUBMITTALS

Government approval is required for submittals with a "G" designation; submittals not having a "G" designation are for information only. When used, a designation following the "G" designation identifies the office that will review the submittal for the Government. The following shall be submitted in accordance with Section 01330 SUBMITTAL PROCEDURES:

SD-03 Product data

Local Control Panels

1. Provide front and rear elevations that include the outline of instrument transformers, all internal barriers, and interior elevations.

2. Provide section views that include the steel wide flange and channel iron mounting base details. All dimensions for rough in work at the site shall be provided.

3. Provide the space allocation for termination of feeder and control cables and the space allocation for conduit installation.

4. Provide the arrangement, identification of components, and nameplate schedule for all units.

5. Provide details of bus, connections, terminals, etc., including the complete ground bus arrangement and enclosure ground connections.

6. Provide single line diagrams; JIC ladder type control schematic diagrams; and relay and metering schematic diagrams for the equipment.

7. Wiring Diagrams.

a. Connection diagrams for the wiring of equipment in each local control panel shall be included.

b. Interconnection diagrams shall be included showing the wiring to other equipment. The terminal block points shall be clearly identified for the external wiring which shall be routed in or out of each local control panel. The wiring diagrams shall provide adequate space for the addition of cable and wire designations for the external wiring to be routed in or out of each control panel at the terminal blocks.

PART 2 PRODUCTS

2.1 MATERIALS

A. Local control panels furnished by the supplier of the equipment shall conform with the requirements given herein.

B. All enclosures for the local control panels shall have the proper NEMA rating for the area in which they are installed, or the equivalent International Protection (IP) rating.

C. Each local control panel shall have a front door with concealed hinges and shall be provided with a sturdy, positive latching.

2.2 SAFETY SWITCHES AND CIRCUIT BREAKERS

A. Safety switches shall be rated at 600 volts for 380 volt AC circuits and 250 volts for 220 volt AC. Each safety switch shall be non-fusible horsepower rated.

B. Circuit breakers for 380 volt service shall have a minimum frame size of 60 amperes and shall be rated for 600 volts. The trip settings shall be as required or as shown on the Drawings. The breaker interrupting rating shall be as per design requirements, symmetrical at 380 volts AC.

C. Circuit breakers for 220 volt and 380 volt service shall be 600 volt rated, shall be of the "bolt on" type and shall have an interrupting rating of as per design requirement at 240 volts AC. The trip settings shall be as required or as shown on the Drawings.

D. Circuit breaker and safety switch Basis of Design: Cutler-Hammer, GE, ABB, Group Schneider Telemechanic, or Siemens Energy & Automation.

2.3 MOTOR STARTERS

A. The minimum size starter used for 380 volts, 3 phase, 50 Hertz motor shall be NEMA Size 1. Auxiliary relay contacts shall be rated for a minimum continuous current of 10 Amperes and a maximum voltage of 600 volts.

B. Each starter shall be provided with a molded case magnetic circuit protector (MCP) type breaker with externally operated door interlocked operating handle with padlock provisions for three locks.

C. Each starter shall have a 380-220 volt control transformer with fused primary and one side of secondary fused and the other side grounded. Each control transformer shall have a capacity of 100 VA above the required NEMA size starter rating for external circuits. The minimum size control transformer shall be 200 VA.

D. Each starter shall be equipped with three phase thermal overcurrent relays with reset operated from outside the door. The reset pushbutton shall be oil tight.

E. Each starter shall be provided with a minimum of two normally open and two normally closed extra auxiliary (non power) contacts. This number is in excess of the number of standard auxiliary contacts.

F. Three overload relays selected to carry 100 percent of full load motor current continuously, including the motor service factor, to withstand motor starting and avoid nuisance trips.

G. Each starter shall be provided with a Hand-Off-Auto selector switch and with push to test, light emitting diode (LED) type red (on) and green (off) indicating lights mounted on the door.

H. Each starter contactor shall be furnished with barrier type terminal blocks in accordance with the equipment manufactures UL listed components. All terminals shall be completely accessible from the front of the control panel.

I. Basis of Design: Allen-Bradley, Cutler-Hammer, GE, Square D, Group Schneider Telemechanic, or Siemens Energy & Automation.

J. Metering pumps control panels will contain those particular starters. All other starters will be located in the electrical room of the water treatment plant or wastewater treatement plant, as appropriate.

2.4 CONTROL DEVICES

A. Enclosures shall be NEMA or IEC rated for the area in which they are installed.

B. Pushbuttons

1. Pushbutton operators shall have a full guard with green insert for start and red insert for stop.

2. Emergency stop push button operators shall have a full guard with a red insert.

3. The lock-out stop pushbutton shall be equipped with a lockable mechanism that will hold the stop button in the depressed condition.

4. Each contact block shall have double break, direct acting contacts, with normally open and normally closed contacts.

5. Each pushbutton operator shall be provided with the number of contact blocks as shown on the Drawings or as required for the application.

C. Selector Switches

1. Selector switches shall be provided as 2 position, 3 position, or 4 position; with or without spring return as shown on the Drawings or as required for the application.

2. The selector switch operator knobs shall be for gloved hand operation.

3. Key type selector switch operators shall be provided as shown on the Drawings or as required in these Specification sections.

4. Each selector switch shall be provided with the appropriate cam operator as required for the application.

5. Each contact block shall have double break direct acting contacts, with normally open and normally closed contacts.

D. Pilot Lights

1. Pilot lights shall be light emitting diode (LED) type with the assembly rated for direct connection at the control circuit voltage.

2. Each LED shall be replaceable.

3. Each LED shall be of the high brightness type.

4. Each pilot light shall be push-to-test type.

5. Color caps shall be provided as follows:

a. Red shall be Running or "On"

b. Green shall be Not Running, Stopped, or "Off"

c. White shall be Ready To Operate

d. Amber shall be Safety Device Trip

e. Other colors shall be as shown on the Drawings or as required in these Specification sections.

2.5 RELAYS

A. Relay logic circuits with manual and automatic pilot devices shall be used to control all motor operation. Control circuit voltage shall be 220 volts AC.

B. Control relays, unless otherwise noted, shall be 220 volt AC operated, multi contact, load voltage and current rated general purpose relays in NEMA Type 1 enclosures with contacts as required.

C. Each relay shall be rated 600 volts and shall have convertible, double break, silver alloy, contacts with pressure wire connectors. Each contact shall be provided with normally open or closed status indication.

D. Timing Relays shall be pneumatic type .

E. Each relay coil shall be suitable for 220 volt, single phase, 50 Hertz application.

F. Basis of Design: Agastat, Allen-Bradley, Cutler-Hammer, GE, Group Schneider Telemechanic, or Siemens Energy & Automation.

2.6 ELECTRICALLY HELD CONTACTORS

A. Electrically held contactors shall be provided as shown on the Drawings, as specified, or as required for the application.

B. Each power contact shall be totally enclosed, double break contacts rated for all types of ballast loads, tungsten loads, resistance loads, and motor loads.

1. Each contact shall be replaceable without disturbing the line or load wiring.

2. Each contact shall be 600 volt rated.

3. Each contact rated 30 Amperes and larger shall be normally open type.

4. Each contact rated 20 Amperes shall be convertible from normally open to normally closed.

C. Each contactor coil shall be suitable for the applied control voltage, shall be encapsulated and shall be rated for continuous operation.

D. Each contactor shall have a control circuit holding contact, two normally open auxiliary contacts, and two normally closed auxiliary contacts. Contactors that have 20 Ampere rated power contacts may utilize 4 poles for the required auxiliary contacts.

2.7 MECHANICALLY HELD CONTACTORS

A. Each mechanically held contactor shall be provided as shown on the Drawings, as specified, or as required for the application.

B. Each power contact shall be totally enclosed, double break contacts rated for all types of ballast loads, tungsten loads, resistance loads, and motor loads.

1. Each contact shall be replaceable without disturbing the line or load wiring.

2. Each contact shall be 600 volt rated.

3. Each contact rated 30 Amperes and larger shall be normally open type.

4. Each contact rated 20 Amperes shall be convertible from normally open to normally closed.

C. Each contactor coil shall be suitable for the applied control voltage, shall be encapsulated, and shall be rated for continuous operation.

D. Each contactor shall have coil clearing contacts for both the latch and unlatch operations.

E. Each contactor shall have two normally open auxiliary contacts and two normally closed auxiliary contacts. Contactors that have 20 Ampere rated power contacts may utilize 4 poles for the required auxiliary contacts.

2.8 NAMEPLATES

A. Nameplates shall be laminated phenolic material with engraved letters and shall designate the purpose of each switch, each circuit breaker, each instrument, each meter, each relay, each fuse, each terminal block, etc.

B. The minimum height of letters used shall be 3/16 inch. The main titles

for each panel, each circuit or each cubicle designation, shall be in letters 3/8 inch in height. Letters shall be block type and square cut. The wording shall be furnished as shown on the shop drawings. Each nameplate shall be white phenolic material with black engraved letters.

C. Each nameplate shall be fastened to the equipment with stainless steel screws. This shall not change the enclosure NEMA Type rating.

2.9 CABLE TERMINATIONS AND TAGGING

A. Compression type cable lugs for terminating cables and equipment within each panel or cables entering and leaving the enclosed structures shall be furnished and installed by the equipment manufacturer. Copper type connectors and terminations shall be furnished. Aluminum copper type are not acceptable. Copper compression connectors shall be long barrel, tin plated, closed end compression type. The barrel for each cable lug shall be sized for the exact cable size specified.

B. Supports shall be provided for all power and control cables.

C. All cable, primary and secondary, shall enter from the top or bottom. Provisions shall be provided to support incoming cable. Sufficient room shall be provided to terminate the cables.

D. Cable/wire markers shall be installed on both ends of all conductors both for internal and external cables.

2.10 CONTROL DEVICES AND WIRING

A. Control devices, local instrument cables, and wiring required on the equipment shall be furnished and installed at the factory.

B. All small wiring for control or accessory equipment shall be installed in Code Approved wireway. All small wiring using metallic enclosures shall be grounded.

C. All internal control wiring shall be Number 12 AWG (4 mm2), except where larger size conductors are needed for current carrying requirements or smaller wiring on mass produced pre-manufactured sub-assemblies. Each conductor shall be stranded copper for fixed wiring and extra flexible copper for hinged wiring. Internal current transformer secondary wiring shall be Number 10 AWG (6 mm2). Alarm wiring shall be Number 16 AWG (2 mm2)twisted paired shielded. Each conductor shall have 600 volts, 90 degrees C, polyvinyl chloride insulation with flameproof braid covering, Type TBS, or cross linked polyethylene, Type SIS.

D. All control and instrument wiring; alarm leads; instrument transformer secondaries; and other internal wiring; for connection to internal and external cables, shall be terminated at terminal blocks. A maximum of two wires shall be connected under each terminal screw. Each terminal block shall be barriered molded blocks, 600 volt rated, 70 Ampere (minimum) rating, screw type, with washer head screws. Acceptable terminal block manufacturers shall be Marathon Series 1600, Cutler-Hammer, or Buchannan.

E. Compression type solderless copper lugs shall be furnished for each terminal block for external control and instrument wires.

F. Cable/wire markers shall be installed on both ends of all conductors both for internal and external cables.

G. Wiring between relays and terminal blocks shall be completed for all contacts, whether they are used or not.

2.11 FUSES

A. The Contractor shall furnish and install fuses for all fusible equipment provided on this Project regardless of which trade has provided such equipment. All fuses shall be provided in accordance with the indications of size and voltage ratings given on the Drawings and shall have UL and NEC approval as being suitable protection for conductors under overload conditions.

1. All fuses shall be of the same manufacturer.

2. No paralleling of fuses shall be permitted.

B. Fuses shall be dual element with a separate thermal element that will open at 280 degrees F or less and shall have time delay such that they shall hold 500 percent rated current for a minimum of ten seconds in all sizes.

C. Control circuit fuses shall be time-delay current limiting.

D. The Contractor shall check each motor nameplate data and provide proper fuses for motor running protection.

E. Spare fuses shall be furnished in the ratio of ten percent of each size and type installed, but not less than three of each size and type. All fuses blown during construction shall be replaced by the Contractor and a complete supply of spare fuses shall be turned over to the Commissioner upon completion of the Project.

2.12 PAINTING

A. All interior and exterior seams shall be carefully filled and sanded smooth for neat appearance. The equipment manufacturer shall remove oils and dirt to form a chemically and anodically neutral conversion coating, to improve the finish to metal bond, and to provide resistance to rust. All surfaces shall be phosphatized before any of the protective coatings are applied. The final coatfornon-stainless steel surfaces shall be baked semi gloss enamel to provide adhesion, resiliency, durability, color stability, and stain resistance.

B. The exterior surface of all non-stainless steel structures shall be thoroughly cleaned and given a coat of primer and a finish coat of the equipment manufacturer's Standard of ANSI Standard light gray color Number 61.

C. The interior surface of all non-stainless steel structures shall be given a primary coat and a finish coat of ANSI Standard light gray color Number 61.

D. The equipment manufacturer shall provide an adequate supply of touch up paint in aerosol cans.

E. A packaged kit of refinishing materials, with complete instructions, shall be included with each shipment for touch up in the field.

PART 3 EXECUTION

3.1 INSTALLATION

A. The Contractor shall install the equipment in strict accordance with the final reviewed shop drawings and the equipment manufacturer's recommendations.

B. Final adjustments to the equipment shall include verification of the proper mechanical operation, verification of the instrument operation, and setting of the circuit breakers, and devices.

C. The Contractor shall adjust the location of equipment to accommodate the work in accordance with field conditions encountered.

D. The equipment shall be installed to permit maintenance and replacement of parts, and shall be clear of all openings with swinging or moving doors, partitions or access panels.

E. The equipment shall be of such construction that when it is installed on a concrete pad there are no openings between the top of the pad and the bottom of the equipment.

F. Mounting Bases for Floor Mounted Control Panels

1. The Contractor shall install each floor mounted control panel on a 4 inch thick concrete housekeeping pad of sufficient size plus a minimum 4 inch apron.

2. Each foundation shall be level, stable, and compacted to 95 percent Standard Proctor.

3. Conduit locations shall be in accordance with manufacturer=s approved shop drawings.

G. Wall Mounted Control Panel

1. Each wall mounted control panel shall be supported and mounted away from the wall with a galvanized steel strut support system. The minimum separation between the equipment and the wall shall be one inch.

2. Each wall mounted cabinet shall be installed with the top at a maximum of 6 feet 6 inches above the finished floor.

3.2 PERFORMANCE TESTING

The Contractor shall test each complete local control panel installation to assure proper operation and correct sizing of all control fuses and motor overload units.

-- End of Section --

SECTION 16263

DIESEL-GENERATOR SET STATIONARY 100-2500 KW, WITH AUXILIARIES

PART 1 GENERAL

1.1 REFERENCES

The publications listed below form a part of this specification to the extent referenced. The publications are referred to in the text by basic designation only.

Unless noted otherwise, all material used shall be in compliance with the requirements of the applicable German (DIN) Standards. In the event DIN Standard material is unavailable, contractor may then select comparable British Standard (BS), or Underwriters Laboratories Inc. (UL) listed material. Equipment enclosure types shall be in compliance with the National Electrical Manufacturer's Association (NEMA) or the International Electro-Technical Committee (IEC) standards. Material and equipment installed under this contract shall be for the appropriate application.

Unless otherwise specified or indicated, electrical and electronics terms used in these specifications and on the Drawings, shall be defined in DIN, I.E.C., BS or EN standards.

AMERICAN NATIONAL STANDARDS INSTITUTE (ANSI)

ANSI C12.11	(1987; R 1993) Instrument Transformers for Revenue Metering, 10 kV BIL through 350 kV BIL (0.6 kV NSV through 69 kV NSV)
ANSI C39.1	(1981; R 1992) Requirements for Electrical Analog Indicating Instruments

ASTM INTERNATIONAL (ASTM)

ASTM A 53/A 53M	(2001) Pipe, Steel, Black and Hot-Dipped, Zinc-Coated, Welded and Seamless
ASTM A 106	(2002) Seamless Carbon Steel Pipe for High-Temperature Service
ASTM A 181/A 181M	(2001) Carbon Steel Forgings, for General-Purpose Piping
ASTM A 234/A 234M	(2001a) Piping Fittings of Wrought Carbon Steel and Alloy Steel for Moderate and High Temperature Service
ASTM D 975	(1998b) Diesel Fuel Oils

ASME INTERNATIONAL (ASME)

ASME B16.3	(1998) Malleable Iron Threaded Fittings
ASME B16.5	(1996) Pipe Flanges and Flanged Fittings

ASME B16.11	(2001) Forged Fittings, Socket-Welding and Threaded

ELECTRICAL GENERATING SYSTEMS ASSOCIATION (EGSA)

EGSA 101P	(1995a) Engine Driven Generator Sets

INSTITUTE OF ELECTRICAL AND ELECTRONICS ENGINEERS (IEEE)

IEEE C57.13.1	(1981; R 1992) IEEE Guide for Field Testing of Relaying Current Transformers
IEEE Std 1	(1986; R 1992) General Principles for Temperature Limits in the Rating of Electric Equipment and for the Evaluation of Electrical Insulation
IEEE Std 43	(1974; R 1991) Testing Insulation Resistance of Rotating Machinery
IEEE Std 100	(1997) IEEE Standard Dictionary of Electrical and Electronics Terms
IEEE Std 115	(1995) IEEE Guide: Test Procedures for Synchronous Machines
IEEE Std 120	(1989) Electrical Measurements in Power Circuits
IEEE Std 519	(1992) Harmonic Control in Electrical Power systems

MANUFACTURERS STANDARDIZATION SOCIETY OF THE VALVE AND FITTINGS INDUSTRY (MSS)

MSS SP-58	(1993) Pipe Hangers and Supports - Materials, Design and Manufacture
MSS SP-69	(1996) Pipe Hangers and Supports - Selection and Application
MSS SP-80	(1997) Bronze Gate, Globe, Angle and Check Valves

NATIONAL ELECTRICAL MANUFACTURERS ASSOCIATION (NEMA)

NEMA ICS 6	(1993; R 2001) Industrial Control and Systems, Enclosures
NEMA MG 1	(1998; Rev 1, 2000) Motors and Generators
NEMA PB 1	(1995) Panelboards
NEMA PB 2	(1995) Deadfront Distribution Switchboards
NEMA SG 5	(1995) Power Switchgear Assemblies

NATIONAL FIRE PROTECTION ASSOCIATION (NFPA)

NFPA 30	(1996) Flammable and Combustible Liquids Code
NFPA 70	(2005) National Electrical Code
NFPA 99	(1999) Health Care Facilities

SOCIETY OF AUTOMOTIVE ENGINEERS INTERNATIONAL (SAE)

SAE J537	(1996) Storage Batteries

1.2 SUBMITTALS

Government approval is required for submittals with a "G" designation; submittals not having a "G" designation are for information only. When used, a designation following the "G" designation identifies the office that will review the submittal for the Government. The following shall be submitted in accordance with Section 01330 SUBMITTAL PROCEDURES:

SD-03 Product Data

Performance Criteria
Sound Limitations
Harmonic Requiremants
Engine-Generator Parameter Schedule
Power Factor
Heat Rejected To Engine-Generator Space
Cooling System
Time-Delay on Alarms
Generator

The generator kW rating and short circuit current capacity (both symmetric and asymmetric).

Manufacturer's Catalog
Site Welding
Spare Parts
Onsite Training
Battery Charger
Vibration-Isolation
Posted Data and Instructions
Instructions

SD-07 Certificates

Vibration Isolation
Prototype Test
Reliability and Durability
Emissions
Sound Limitations
Flywheel Balance
Materials and Equipment
Cooling System

1.3 SUBMITTALS

The following shall be submitted in accordance with Section 01335 SUBMITTAL

PROCEDURES for design built project:

SD-06 Test Reports

Factory Inspection and Tests
Factory Tests

SD-10 Operation and Maintenance Data

Operation and Maintenance Manuals
Maintenance Procedures
Special Tools
Filters

1.4 DOCUMENTATION FOR PROPOSED VARIANT PRODUCTS

For products not explicitly named in the specification that meet product requirement criteria named herein, product data as listed in article titled MATERIAL AUTHENTICATION DATA INCLUDED IN DESIGN ANALYSIS shall be submitted for review. Product information will be provided to establish that proposed product meets the requirements of this specification and has the indicated qualities related to type, function, dimension, in-service performance, physical properties, appearance, or other relevant characteristics that equal or exceed those of specified product. Product is consistent with the Contract Documents and will produce the indicated results, and is compatible with other portions of the Work.

1.5 SYSTEM DESCRIPTION

Prime Power Generators: Generators shall be skid mounted industry size, 1500 RPM, diesel-engine Cummins Prime Rated engine-generator sets. Number of units shall be as indicated on Drawings (Cummins KTA50-G8 Engine with Cummins P7340 GENERATOR). Generating voltage shall be 3 phase, 380/220 volts, and 50 hertz, stepped up to 15kV, via transformers, for base wide Primary Power Distribution through generator switchgear described below. Each generator shall be provided with a day tank with a minimum fuel capacity of 8 hours operating at 100% generated rated (kW) load.

Generator Synchronizing Equipment: Generator synchronizing/paralleling equipment shall be provided, in order for the generator(s) to synchronize with an operating generator, prior to coming on-line. Minimum of one (1) prime power generator shall be on line at all times. With an increase of the demand load, all stand-by generator(s) shall start and the generator that synchronizes first with the operating generator shall come on-line and share load equally. The other generator(s) shall run through a complete cool-down cycle and then stop. Similarly, with a decrease in the demand load, the generator(s) shall drop-off line, one at a time, keeping a minimum of one generator operating on-line. All generators shall go through a cool-down cycle prior to coming to stop. All relaying shall be automatically reset for automatic restart and stopping of generators as the load demands increase or decrease. Load sharing by the stand-by generator(s) shall be adjustable between 50% to 85% load on the operating generator(s). Synchronizing/paralleling of generators shall be automatic and manual.

Generator Paralleling/ Synchronizing Equipment Computer Software Operation: The Contractor shall provide software for programming of the additional generator paralleling/ synchronizing equipment.

Black Start Generator: Power Plant shall be provided with a 'black-start' generating unit. Generator shall be appropriately sized (kW rating) to meet all of the power requirements for the initial start-up of the power plant. Unit shall be skid mounted and rated at 380/220 volt, 3 phase, 4 wire and 50 hertz. Upon bringing the prime power generator on line, initial start-up power plant load shall be automatically transferred from the black-start generator to the power plant, via an Automatic Transfer Switch (ATS).

1.5.1 Rated Output Capacity

Each engine-generator-set shall provide power equal to the sum of Service Load plus the machine's efficiency loss and associated ancillary equipment loads. Rated output capacity shall also consider engine and/or generator oversizing required due to installation elevation.

1.5.2 Power Ratings

Power ratings shall be in accordance with EGSA 101P.

1.5.3 Transient Response

The engine-generator set governor and voltage regulator shall cause the engine-generator set to respond to the maximum step load changes such that output voltage and frequency recover to and stabilize within the operational bandwidth within the transient recovery time. The engine-generator set shall respond to maximum step load changes such that the maximum voltage and frequency deviations from bandwidth are not exceeded.

1.3.5 Reliability and Durability

Each engine-generator set shall have both an engine and a generator capable of delivering the specified power with an anticipated mean time between overhauls of not less than 10,000 hours operating with a 70% load factor. Two like engines and two like generators shall be cited that have performed satisfactorily in a stationary power plant, independent from the physical location of the manufacturer's and assembler's facilities. The engine and generators should have been in operation for a minimum of 8000 actual hours at a minimum load of 70% of the rated output capacity. During two consecutive years of service, the units should not have experienced any failure resulting in a downtime in excess of 72 hours. Like engines shall be of the same model, speed, bore, stroke, number and configuration of cylinders and rated output capacity. Like generators shall be of the same model, speed, pitch, cooling, exciter, voltage regulator and rated output capacity.

1.6 GENERAL REQUIREMENTS

1.6.1 Engine-Generator Set

Each set shall consist of one engine, one generator, and one exciter mounted, assembled, and aligned on one base; and other necessary ancillary equipment which may be mounted separately. Sets over 750 kW capacity may be shipped in sections. Each set component shall be environmentally suitable for the location shown and shall be the manufacturer's standard product offered in catalogs for commercial or industrial use. Any nonstandard products or components and the reason for their use shall be

specifically identified in paragraph SUBMITTALS.

1.6.2 Nameplates

Each major component of this specification shall have the manufacturer's name, type or style, model or serial number and rating on a plate secured to the equipment. As a minimum, nameplates shall be provided for:

Engines	Relays
Generators	Transformers (CT & PT)
Regulators	Day tanks
Pumps and pump motors	Governors
Generator Breaker	Air Starting System
Economizers	Heat exchangers (other than base mounted)

Where the following equipment is not provided as a standard component by the diesel engine generator set manufacturer, the nameplate information may be provided in the maintenance manual in lieu of nameplates.

Battery charger	Heaters
Switchboards	Exhaust mufflers
Switchgear	Silencers
Battery	Exciters

1.6.3 Personnel Safety Devices

Exposed moving parts, parts that produce high operating temperatures, parts which may be electrically energized, and parts that may be a hazard to operating personnel shall be insulated, fully enclosed, guarded, or fitted with other types of safety devices. The safety devices shall be installed so that proper operation of the equipment is not impaired.

1.6.4 Verification of Dimensions

Before performing any work, the premises shall be visited and all details of the work verified. The Contracting Officer shall be advised in writing of any discrepancies.

1.6.5 Site Welding

Structural members shall be welded in accordance with DIN, I.E.C., BS or EN standards. Welder qualification tests shall be performed for each welder whose qualifications are not in compliance with the referenced standards. The Contracting Officer shall be notified 24 hours in advance of qualification tests. The qualification tests shall be performed at the work site if practical. The welder or welding operator shall apply his assigned symbol near each weld he makes as a permanent record.

1.6.6 Parallel Operation for use with Future Utility

Each engine-generator set specified for parallel operation shall be configured for automatic and manual parallel operation. Each set shall be capable of parallel operation with a future commercial power source on an infinite bus and with one or more sets on an isolated bus.

Additional spaces in switchgear shall be provided to add paralleling

switchgear to operate as described herein.

Upon receiving a utility power failure signal or variance in power loads, switchgear starts engine generator(s) and controls their synchronization and individual circuit breaker closure to parallel the generators onto the bus. Additional controls allow transfer of loads to the operating bus on a priority basis.

Provisions shall be made upon return of the preferred source, utility paralleling switchgear synchronizes and parallels the engine generators to the preferred source, and transfers the loads without power interruption. Generator test - transferring load from source to source without power interruption - is also available. Use of the closed transition operation minimizes load interruptions during test and transfer.

All equipment shall be UL and/or IEC listed.

The switchgear shall be provided with selector switches for open or closed transition; automatic or manual paralleling of generator or utility sources; automatic or manual retransfer to a normal source.

The switch gear shall be provided with active synchronization, PLC controls, soft loading power factor, and interconnecting protective relay design.

1.6.7 Vibration Limitation

The maximum engine-generator set vibration in the horizontal, vertical, and axial directions shall be limited to 0.15 mm (peak-peak RMS), with an overall velocity limit of 24 mm/second RMS, for all speeds through 110% of rated speed.

1.6.8 Vibration Isolation

Vibration-isolation systems shall be designed and qualified (as an integral part of the base and mounting system in accordance with the seismic parameters specified. Where the vibration-isolation system does not secure the base to the structure floor or unit foundation, seismic restraints shall be provided in accordance with the seismic parameters specified.

1.6.9 Seismic Requirements

Seismic requirements shall be in accordance with Section 16070 SEISMIC PROTECTION FOR ELECTRICAL EQUIPMENT.

1.6.10 Fuel Consumption

Engine fuel consumption shall not exceed the following maximum limits based on the conditions listed below.

Size Range Net kW	% of Rated Output capacity	Fuel Usage kg/kWH (lbs/kWH)
100 - 299	75 and 100	0.272 (0.600)
	50	0.292 (0.643)
300 - 999	75 and 100	0.261 (0.575)
	50	0.272 (0.600)

Size Range Net kW	% of Rated Output capacity	Fuel Usage kg/kWH (lbs/kWH)
1000 - 2500	75 and 100	0.243 (0.536)
	50	0.260 (0.573)

Conditions:

a. Net kW of the Set corrected for engine auxiliaries that are electrically driven, where kW is electrical kilowatt hours.

b. 45 megajoules per kilogram (19,350 Btu per pound) high-heat value for fuel used.

c. Sea level operation.

d. Intake-air temperature not over 32 degrees C .

e. Barometric pressure of intake air not less than 95.7 kPa (28-1/4 inches of mercury) of mercury.

1.6.11 Harmonic Requirements

Non-linear loads to be served by each engine-generator set are as indicated.

1.6.12 Starting Time Requirements

Upon receipt of a signal to start, each engine generator set will start, reach rated frequency and voltage and be ready to assume load within the time specified.

1.7 STORAGE AND INSTALLATION

The Contractor shall properly protect material and equipment, in accordance with the manufacturers recommended storage procedures,before, during, and after installation. Stored items shall be protected from the weather and contamination. During installation, piping and similar openings shall be capped to keep out dirt and other foreign matter.

PART 2 PRODUCTS

2.1 MATERIALS AND EQUIPMENT

2.1.1 Basis of Design

Prime Generator:

Generator shall be rated for 380/220 voltage, 3 phase, 50 hertz.

Black Start Generator:

Generator shall be rated for 380/220 voltage, 3 phase, 50 hertz. At 125 degrees C Rise standby Rating kVA/kW shall be 500 kVA/ 400 kW, 1500 rpm.

2.1.2 Filter Elements

Fuel-oil, lubricating-oil, and combustion-air filter elements shall be

manufacturer's desert filter package .

2.1.3 Instrument Transformers

ANSI C12.11.

2.1.4 Pipe (Sleeves, Fuel/Lube-Oil, Compressed Air, Coolant, and Exhaust)

ASTM A 53/A 53M, ASTM A 106 steel pipe. Pipe smaller than 50 mm shall be Schedule 80. Pipe 50 mm and larger shall be Schedule 40.

a. Flanges and Flanged Fittings: ASTM A 181/A 181M, Class 60, or ASME B16.5, Grade 1, Class 150.

b. Pipe Welding Fittings: ASTM A 234/A 234M, Grade WPB or WPC, Class 150, ASME B16.11, 1360.7 kg .

c. Threaded Fittings: ASME B16.3, Class 150.

d. Valves: MSS SP-80, Class 150.

e. Gaskets: Manufacturer's standard.

2.1.5 Pipe Hangers

MSS SP-58 and MSS SP-69.

2.1.6 Electrical Enclosures

NEMA ICS 6.

2.1.6.1 Power Switchgear Assemblies

NEMA SG 5.

2.1.6.2 Switchboards

NEMA PB 2.

2.1.6.3 Panelboards

NEMA PB 1.

2.2 ENGINE

Each engine shall operate on No. 2-D diesel fuel conforming to ASTM D 975, shall be designed for stationary applications and shall be complete with ancillaries. The engine shall be a standard production model described in the manufacturer's catalog. The engine shall be naturally aspirated, supercharged, or turbocharged. The engine shall be 2- or 4-stroke-cycle and compression-ignition type. The engine shall be vertical in-line, V- or opposed-piston type, with a solid cast block or individually cast cylinders. The engine shall have a minimum of two cylinders. Opposed-piston type engines shall have not less than four cylinders. Each block shall have a coolant drain port. Each engine shall be equipped with an overspeed sensor.

2.3 FUEL SYSTEM

The entire fuel system for each engine-generator set shall conform to the requirements of NFPA 30 for the Power plant and contain the following elements:

2.3.1 Pumps

2.3.1.1 Main Pump

Each engine shall be provided with an engine driven pump. The pump shall supply fuel at a minimum rate sufficient to provide the amount of fuel required to meet the performance indicated within the parameter schedule. The fuel flow rate shall be based on meeting the load requirements and all necessary recirculation.

2.3.1.2 Auxiliary Fuel Pump

Auxiliary fuel pumps shall be provided to maintain the required engine fuel pressure, if either required by the installation or indicated on the drawings. The auxiliary pump shall be driven by a dc electric motor powered by the starting/station batteries. The auxiliary pump shall be automatically actuated by a pressure-detecting device.

2.3.2 Fuel Filter

A minimum of one full-flow fuel filter shall be provided for each engine. The filter shall be readily accessible and capable of being changed without disconnecting the piping or disturbing other components. The filter shall have inlet and outlet connections plainly marked.

2.3.3 Relief/Bypass Valve

A relief/bypass valve shall be provided to regulate pressure in the fuel supply line, return excess fuel to a return line and prevent the build-up of excessive pressure in the fuel system.

2.4 LUBRICATION

Each engine shall have a separate lube-oil system conforming to NFPA 30 for the Power plant for all buildings. Each system shall be pressurized by engine-driven pumps. System pressure shall be regulated as recommended by the engine manufacturer. A pressure relief valve shall be provided on the crankcase for closed systems. The crankcase shall be vented in accordance with the manufacturer's recommendation except that it shall not be vented to the engine exhaust system. Crankcase breathers, if provided on engines installed in buildings or enclosures, shall be piped to vent to the outside. The system shall be readily accessible for service such as draining, refilling, etc. Each system shall permit addition of oil and have oil-level indication with the set operating. The system shall utilize an oil cooler as recommended by the engine manufacturer.

2.4.1 Lube-Oil Filter

One full-flow filter shall be provided for each pump. The filter shall be readily accessible and capable of being changed without disconnecting the piping or disturbing other components. The filter shall have inlet and outlet connections plainly marked.

2.4.2 Lube-Oil Sensors

Each engine shall be equipped with lube-oil pressure sensors. Pressure sensors shall be located downstream of the filters and provide signals for required indication and alarms.

2.5 COOLING SYSTEM

Each engine shall have its own cooling system. Each system shall operate automatically while its engine is running. The cooling system coolant shall use a combination of water and ethylene-glycol sufficient for freeze protection at the minimum winter outdoor temperature specified. The maximum temperature rise of the coolant across each engine shall not exceed that recommended and submitted in paragraph SUBMITTALS.

2.5.1 Coolant Pumps

Coolant pumps shall be the centrifugal type. Each engine shall have engine-driven primary pumps.

2.5.2 Heat Exchanger

Each heat exchanger shall be of a size and capacity to limit the maximum allowable temperature rise in the coolant across the engine to that recommended and submitted in paragraph SUBMITTALS for the maximum summer outdoor design temperature and site elevation. Each heat exchanger shall be corrosion resistant, suitable for service in ambient conditions of application.

2.5.2.1 Fin-Tube-Type Heat Exchanger (Radiator)

Heat exchanger may be factory coated with corrosive resistant film, provided that correction measures are taken to restore the heat rejection capability of the radiator to the initial design requirement via over sizing, or other compensating methods. Internal surfaces shall be compatible with liquid fluid coolant used. Materials and coolant are subject to approval by the Contracting Officer. Heat exchangers shall be pressure type incorporating a pressure valve, vacuum valve and a cap. Caps shall be designed for pressure relief prior to removal. Each heat exchanger and the entire cooling system shall be capable of withstanding a minimum pressure of 48 kPa (7 psi) and shall be protected with a strong grille or screen guard. Each heat exchanger shall have at least two tapped holes; one tapped hole shall be equipped with a drain cock, the rest shall be plugged.

The outside mean design ambient temperature at the project altitude is 95 degrees F/35 degrees C. At times it is possible for the outside air to exceed the 35 degrees C. Temperatures in the range of 104 degrees F/40 degrees C. is probable. The openings through the building exterior wall are sized generically for a standard radiator provided with the specified engine. If the radiator actually used is larger/smaller than the openings allowed for on the drawings, the openings will be adjusted to properly accommodate the actual radiator being provided. Shop drawings are to be submitted indicating any building changes for approval by the project structural engineer.

2.5.3 Thermostatic Control Valve

A modulating type, thermostatic control valve shall be provided in the

coolant system to maintain the coolant temperature range submitted in paragraph SUBMITTALS.

2.5.4 Ductwork

Ductwork shall be as specified in Section 15895 AIR SUPPLY, DISTRIBUTION, VENTILATION, AND EXHAUST SYSTEM except that a flexible connection shall be used to connect the duct to the diesel engine radiator. Material for the connection shall be wire-reinforced glass. The connection shall be rendered as airtight as possible.

2.5.5 Temperature Sensors

Each engine shall be equipped with coolant temperature sensors. Temperature sensors shall provide signals for pre-low, pre-high and high indication and alarms.

2.6 AIR INTAKE EQUIPMENT

Filters and silencers shall be provided in locations that are convenient for servicing. The silencer shall be of the high-frequency filter type, located in the air intake system as recommended by the engine manufacturer. Silencer shall be capable of reducing the noise level at the air intake so that the indicated pressure levels specified in paragraph SOUND LIMITATIONS will not be exceeded. A combined filter-silencer unit meeting requirements for the separate filter and silencer items may be provided. Expansion elements in air-intake lines shall be copper.

2.7 EXHAUST SYSTEM

The system shall be separate and complete for each engine. Piping shall be supported to minimize vibration. Where a V-type engine is provided, necessary flexible sections and hardware, shall be provided.

2.7.1 Flexible Sections and Expansion Joints(Dual Flex Connections)

A flexible section shall be provided at each engine and an expansion joint at each muffler. Flexible sections and expansion joints shall have flanged connections. Flexible sections shall be made of convoluted seamless tube without joints or packing. Expansion joints shall be the bellows type. Expansion and flexible elements shall be stainless steel suitable for diesel-engine exhaust gas at the maximum exhaust temperature that is specified by the engine manufacturer. Expansion and flexible elements shall be capable of absorbing vibration from the engine and compensation for thermal expansion and contraction.

2.7.2 Exhaust Muffler(Dual mufflers for prime generators)

A chamber type exhaust muffler shall be provided. The muffler shall be constructed of welded steel and designed for inside horizontal mounting. Eyebolts, lugs, flanges, or other items shall be provided as necessary for support in the location and position indicated. Pressure drop through the muffler shall not exceed the recommendations of the engine manufacturer. Outside mufflers shall be zinc coated or painted with high temperature 800 degrees C resisting paint. The muffler and exhaust piping together shall reduce the noise level to less than the maximum acceptable level listed for sound limitations in paragraph SOUND LIMITATIONS. The muffler shall have a drain valve, nipple, and cap at the low-point of the muffler.

2.7.3 Exhaust Piping

Horizontal sections of exhaust piping shall be sloped downward away from the engine to a drip leg for collection of condensate with drain valve and cap. Changes in direction shall be long radius. Exhaust piping, mufflers and silencers installed inside any building shall be fully insulated with 100 mm (4 inches) calcium silicate insulation or High density RockWool and covered with aluminum protective jacket and covered to protect personnel. Vertical exhaust piping shall be provided with a hinged, gravity-operated, self-closing, rain cover.

2.8 STARTING SYSTEM

The starting system for engine generator sets used in non-emergency applications shall be as follows.

2.8.1 Controls

An engine control switch shall be provided with functions including: run/start(manual), off/reset, and, automatic mode. Start-stop logic shall be provided for adjustable cycle cranking and cooldown operation. The logic shall be arranged for fully automatic starting in accordance with paragraph AUTOMATIC ENGINE-GENERATOR-SET SYSTEM OPERATION. Electrical starting systems shall be provided with an adjustable cranking limit device to limit cranking periods from 1 second up to the maximum duration.

2.8.2 Capacity

The starting system shall be of sufficient capacity, at the maximum outdoor summer temperature specified to crank the engine without damage or overheating. The system shall be capable of providing a minimum of three cranking periods with 15 second intervals between cranks. Each cranking period shall have a maximum duration of 15 seconds.

2.8.3 Electrical Starting

Manufacturers recommended dc system, utilizing a negative circuit ground.

2.8.3.1 Battery

A starting battery system shall be provided and shall include the battery, corrosion-resistant battery rack, intercell connectors, spacers, automatic battery charger with overcurrent protection, metering and relaying. The battery shall be in accordance with SAE J537. Critical system components (rack, protection, etc.) shall be sized to withstand the seismic acceleration forces specified. The battery shall be lead-acid , with sufficient capacity, at the minimum outdoor and maximum outdoor temperature specified, to provide the specified cranking periods. Valve-regulated lead-acid batteries are not acceptable.

Batteries:

Capacity: 1300 cold-cranking amps; 400 minute reserve capacity.

Quantity: Four.

Arrangement: One set of two batteries in parallel (for 24 vdc output).

2.8.3.2 Battery Charging

Engine-mounted, 24 vdc, 55 amp alternator.

2.8.4 Starting Aids

The manufacturer shall provide one or more of other following methods to assist engine starting.

2.8.4.1 Jacket-Coolant Heaters

A thermostatically controlled electric heater shall be mounted in the engine coolant jacketing to automatically maintain the coolant within plus or minus 1.7 degrees C temperature. The heater shall operate independently of engine operation so that starting times are minimized. Power for the heaters shall be rated at 5000 watts at 220 volts ac, 50 Hz, 1 phase.

a. Prime Rated Sets

The control temperature shall be the higher of the manufacturer's recommended temperature or the minimum coolant inlet temperature of the engine recommended in paragraph SUBMITTALS.

2.9 GOVERNOR

Each engine shall be provided with a governor which maintains the frequency within a bandwidth of the rated frequency, over a steady-state load range of zero to 100% of rated output capacity. The governor shall be configured for safe manual only adjustment of the speed/frequency during operation of the engine-generator set, without special tools, from 90 to 110% of the rated speed/frequency, over a steady state load range of 0 to 100% or rated capacity.

2.9.1 Governor Performance

Isochronous governors shall maintain the midpoint of the frequency bandwidth at the same value for steady-state loads over the range of zero to 100% of rated output capacity.

2.10 GENERATOR

Each generator shall be of the synchronous type, single bearing, close coupled type, conforming to NEMA MG 1, equipped with winding terminal housings in accordance with NEMA MG 1 equipped with an amortisseur winding, and directly connected to the engine. Insulation shall be Class H. Generator design shall protect against mechanical, electrical and thermal damage due to vibration, 25% overspeeds, or voltages and temperatures at a rated output capacity of 110% for prime applications and 100% for standby applications. Generator ancillary equipment shall meet the short circuit requirements of NEMA MG 1. Frames shall be the drip-proof type.

2.10.1 Current Balance

At 100% rated output capacity, and load impedance equal for each of the 3 phases, the permissible current difference between any 2 phases shall not exceed 2% of the largest current on either of the 2 phases.

2.10.2 Voltage Balance

At any balanced load between 75 and 100% of rated output capacity, the difference in line-to-neutral voltage among the 3 phases shall not exceed 1% of the average line-to-neutral voltage. For a single-phase load condition, consisting of 25% load at unity power factor placed between any phase and neutral with no load on the other 2 phases, the maximum simultaneous difference in line-to-neutral voltage between the phases shall not exceed 3% of rated line to neutral voltage. The single-phase load requirement shall be valid utilizing normal exciter and regulator control. The interpretation of the 25% load for single phase load conditions means 25% of rated current at rated phase voltage and unity power factor.

2.10.3 Waveform

The deviation factor of the line-to-line voltage at zero load and at balanced rated output capacity shall not exceed 10%. The RMS of all harmonics shall be less than 5.0% and that of any one harmonic less than 3.0% of the fundamental at rated output capacity. Each engine-generator shall be designed and configured to meet the total harmonic distortion limits of IEEE Std 519.

2.11 EXCITER

The generator exciter shall be of the brushless type. Semiconductor rectifiers shall have a minimum safety factor of 300% for peak inverse voltage and forward current ratings for all operating conditions, including 110% generator output at 4O degrees C ambient. The exciter and regulator in combination shall maintain generator-output voltage within the limits specified.

2.12 VOLTAGE REGULATOR

Each generator shall be provided with a solid-state voltage regulator, separate from the exciter. The regulator shall maintain the voltage within a bandwidth of the rated voltage, over a steady-state load range of zero to 100% of rated output capacity. Regulator shall be configured for safe manual only adjustment of the engine-generator voltage output without special tools, during operation, from 90 to 110% of the rated voltage over the steady state load range of 0 to 100% of rated output capacity. Regulation drift shall not exceed plus or minus 0.5% for an ambient temperature change of 20 degrees C. Reactive droop compensation or reactive differential compensation shall load share the reactive load proportionally between sets during parallel operation.

2.12.1 Steady State Performance (Regulation or Voltage Droop)

The voltage regulator shall have a maximum droop of 2% of rated voltage over a load range from 0 to 100% of rated output capacity and automatically maintain the generator output voltage within the specified operational bandwidth.

2.13 GENERATOR ISOLATION AND PROTECTION (PRIME)

Devices necessary for electrical protection and isolation of each engine-generator set and its ancillary equipment shall be provided. The generator circuit breaker (IEEE Device 52) ratings shall be consistent with the generator rated voltage and frequency, with continuous, short circuit withstand, and interrupting current ratings to match the generator

capacity. The generator circuit breaker shall be operated as indicated. A set of surge capacitors, to be mounted at the generator terminals shall be provided. Monitoring and control devices shall be as specified in paragraph GENERATOR PANEL.

2.14 SAFETY SYSTEM

Devices, wiring, remote panels, local panels, etc. shall be provided and installed as a complete system to automatically activate the appropriate signals and initiate the appropriate actions. The safety system shall be provided with a self-test method to verify its operability. Alarm signals shall have manual acknowledgment and reset devices. The alarm signal systems shall reactivate for new signals after acknowledgment is given to any signal. The systems shall be configured so that loss of any monitoring device shall be dealt with as an alarm on that system element.

2.14.1 Audible Signal

The audible alarm signal shall be continuously activated upon alarm and silenced upon acknowledgment. Signal devices shall be located as shown.

2.14.2 Visual Signal

The visual alarm signal shall be a panel light. The light shall be normally off, activated to be blinking upon alarm. The light shall change to continuously lit upon acknowledgement. If automatic shutdown occurs, the display shall maintain activated status to indicate the cause of failure and shall not be reset until cause of alarm has been cleared and/or restored to normal condition. Shutdown alarms shall be red; all other alarms shall be amber.

2.14.3 Alarms and Action Logic

2.14.3.1 Shutdown

Simultaneous activation of the audible signal, activation of the visual signal, stopping the engine, and opening the generator main circuit breakers shall be accomplished.

2.14.3.2 Problem

Activation of the visual signal shall be accomplished.

2.14.4 Local Alarm Panel

A local alarm panel shall be provided with the following shutdown and alarm functions in accordance with NFPA 99 and including the listed Corps of Engineer requirements mounted either on or adjacent to the engine generator set.

2.14.5 Time-Delay on Alarms

For startup of the engine-generator set, time-delay devices shall be installed bypassing the low lubricating oil pressure alarm during cranking, and the coolant-fluid outlet temperature alarm. The lube-oil time-delay device shall return its alarm to normal status after the engine starts. The coolant time-delay device shall return its alarm to normal status 5 minutes after the engine starts.

2.15 ENGINE GENERATOR SET CONTROLS AND INSTRUMENTATION

Devices, wiring, remote panels, local panels, etc. shall be provided and installed as a complete system to automatically activate the appropriate signals and initiate the appropriate actions.

2.15.1 Controls

A local control panel shall be provided with controls as follows.

High coolant temperature, low oil pressure, and low water temperature alarms.

High coolant temperature, low oil pressure, and engine overspeed and overcrank shutdowns.

Engine instrumentation for coolant temperature, oil pressure, run hour, DC voltage indicator and emergency shutdown.

Generator instrumentation for AC volts, amps, frequency, kW, kVA, kVAR, kWhr, PF, and percent of rated load.

2.15.2 Engine Generator Set Metering and Status Indication

A local panel shall be provided.

2.16 GENERATOR SYNCHRONIZING/CONTROL SWITCHBOARD (PRIME)

2.17 PANELS

Each panel shall be of the type and kind necessary to provide specified functions. Panels shall be mounted as shown. Instruments shall be mounted flush or semiflush. Convenient access to the back of panels shall be provided to facilitate maintenance. Instruments shall be calibrated using recognized industry calibration standards. Each panel shall be provided with a panel identification plate which clearly identifies the panel function. Each instrument and device on the panel shall be provided with a plate which clearly identifies the device and its function as indicated. Switch plates shall clearly identify the switch-position function.

2.17.1 Enclosures

Enclosures shall be designed for the application and environment.

2.17.2 Analog

Analog electrical indicating instruments shall be in accordance with ANSI C39.1 with semiflush mounting. Switchboard, switchgear, and control-room panel-mounted instruments shall have 250 degree scales with an accuracy of not less than 99%. Unit-mounted instruments shall be the manufacturer's standard with an accuracy of not less than 98%. The instrument's operating temperature range shall be minus 20 to plus 65 degrees C. Distorted generator output voltage waveform of a crest factor less than 5 shall not affect metering accuracy for phase voltages, hertz and amps.

2.17.3 Electronic

Electronic indicating instruments shall be true RMS indicating instruments,

100% solid state, state-of-the-art, microprocessor controlled to provide specified functions. Control, logic, and function devices shall be compatible as a system, sealed, dust and water tight, and shall utilize modular components with metal housings and digital instrumentation. An interface module shall be provided to decode serial link data from the electronic panel and translate alarm, fault and status conditions to set of relay contacts. Instrument accuracy shall be not less than 98% for unit mounted devices and 99% for control room, panel mounted devices, throughout a temperature range of minus 20 to plus 65 degrees C. Data display shall utilize LED or back lit LCD. Additionally, the display shall provide indication of cycle programming and diagnostic codes for troubleshooting. Numeral height shall be 13 mm .

2.17.4 Parameter Display

Indication or readouts of the tachometer, lubricating-oil pressure, ac voltmeter, ac ammeter, frequency meter, and safety system parameters shall be provided. A momentary switch shall be specified for other panels.

2.18 MANUAL ENGINE-GENERATOR-SET SYSTEM OPERATION

Complete facilities shall be provided for manual starting and testing of each set without load, loading and unloading of each set, and synchronization of each set with an energized bus.

2.19 BASE

The base shall be constructed of structural steel. The base shall be designed to rigidly support the engine-generator set, ensure permanent alignment of rotating parts, be arranged to provide easy access to allow changing of lube-oil, and ensure that alignment is maintained during shipping and normal operation. The base shall permit skidding in any direction during installation and shall withstand and mitigate the affects of synchronous vibration of the engine and generator. The base shall be provided with suitable holes for anchor bolts and jacking screws for leveling.

2.20 THERMAL INSULATION

Thermal insulation shall be as specified in Section 15080 THERMAL INSULATION FOR MECHANICAL SYSTEMS.

2.21 PAINTING AND FINISHING

The engine-generator set shall be cleaned, primed and painted in accordance with the manufacturer's standard color and practice.

2.22 FACTORY INSPECTION AND TESTS

The factory tests shall be performed on each engine-generator set. The component manufacturer's production line test is acceptable as noted. Each engine-generator set shall be run not less than 1 hour at rated output capacity prior to inspections. Inspections shall be completed and all necessary repairs made, prior to testing. Engine generator controls and protective devices that are provided by the generator set manufacturer as part of the standard package shall be used for factory tests. When controls and switchgear are not provided as part of the generator set manufacturer's standard package, the actual controls and protective devices provided for the project are not required to be used during the factory

test. The Contracting Officer may provide one or more representatives to witness inspections and tests.

2.22.1 Factory Inspection

Inspections shall be performed prior to beginning and after completion of testing of the assembled engine-generator set. Inspectors shall look for leaks, looseness, defects in components, proper assembly, etc. and any item found to be in need of correction shall be noted as a necessary repair. The following checklist shall be used for the inspection:

INSPECTION ITEM	GOOD	BAD	NOTES
a. Drive belts			
b. Governor and adjustments			
c. Engine timing mark			
d. Starting motor			
e. Starting aids			
f. Coolant type and concentration			
g. Radiator drains			
h. Block coolant drains			
i. Coolant fill level			
j. All coolant line connections			
k. All coolant hoses			
l. Combustion air filter			
m. Combustion air silencer			
n. Lube oil type			
o. Lube oil sump drain			
p. Lube-oil filter			
q. Lube-oil-level indicator			
r. Lube-oil-fill level			
s. All lube-oil line connections			
t. All lube-oil lines			
u. Fuel type and amount			
v. All fuel-line connections			
w. All fuel lines			
x. Fuel filter			
y. Coupling and shaft alignment			
z. Voltage regulators			
aa. Battery-charger connections			
bb. All wiring connections			
cc. Instrumentation			
dd. Hazards to personnel			
ee. Base			
ff. Nameplates			
gg. Paint			
hh. Exhaust-heat recovery unit			
ii. Switchboard			
jj. Switchgear			

2.22.2 Factory Tests

On engine-generator set tests where the engine and generator are required to be connected and operated together, the load power factor shall be the power factor specified in the engine generator set parameter schedule. For engine-generator set with dual-fuel operating capability the following tests shall be performed using the primary fuel type. Electrical measurements shall be performed in accordance with IEEE Std 120. Definitions of terms are in accordance with IEEE Std 100. Temperature

limits in the rating of electrical equipment and for the evaluation of electrical insulation shall be in accordance with IEEE Std 1. In the following tests where measurements are to be recorded after stabilization of an engine-generator set parameter (voltage, frequency, current, temperature, etc.), stabilization is considered to have occurred when measurements are maintained within the specified bandwidths or tolerances, for a minimum of four consecutive readings. Tests specifically for the generator may be performed utilizing any prime mover.

a. Insulation Resistance for Stator and Exciter Test, IEEE Std 115 and IEEE Std 43, to the performance criteria in NEMA MG 1, Part 22. Generator manufacturer's production line test is acceptable.

b. High Potential Test, per IEEE Std 115 and NEMA MG 1, test voltage in accordance with NEMA MG 1. Generator manufacturer's production line test is acceptable.

c. Winding Resistance Test, Stator and Exciter, per IEEE Std 115. Generator manufacturer's production line test is acceptable.

d. Overspeed Vibration Test, per IEEE Std 115 to the performance criteria in NEMA MG 1. The test shall be performed at 110% of rated speed for 5 minutes. The vibration shall be measured at the end bearings (front and back of engine, outboard end of generator) in the horizontal, vertical, and axial directions. Vibration amplitude and speed shall be recorded at one minute intervals.

e. Phase Balance Voltage Test, to the performance criteria specified in paragraph GENERATOR. This test can be performed with any prime mover. Generator manufacturer's production line test results are acceptable.

(1) Start and operate the generator at no load.

(2) Adjust a regulated phase voltage (line-to-neutral) to rated voltage.

(3) Read and record the generator frequency, line-to-neutral voltages, and the line-to-line voltages.

(4) Apply 75% rated load and record the generator frequency, line-to-neutral voltages, and the line-to-line voltages.

(5) Apply rated load and record the generator frequency, line-to-neutral voltages, and the line-to-line voltages.

(6) Calculate average line-neutral voltage and percent deviation of individual line-neutral voltages from average for each load condition.

f. Current Balance on Stator Winding Test, by measuring the current on each phase of the winding with the generator operating at 100 % of Rated Output Capacity, with the load impedance equal for each of the three phases: to the performance criteria specified in paragraph GENERATOR.

g. Voltage Waveform Deviation and Distortion Test per IEEE Std 115 to the performance criteria specified in paragraph GENERATOR. High-speed recording instruments capable of recording voltage

waveform deviation and all distortion, including harmonic distortion shall be used. Representation of results shall include appropriate scales to provide a means to measure and interpret results.

h. Voltage and Frequency Droop Test. Verify that the output voltage and frequency are within the specified parameters as follows:

(1.) With the generator operating at no load, adjust voltage and frequency to rated voltage and frequency. Record the generator output frequency and line-line and line-neutral voltages.

(2.) Increase load to Rated Output Capacity. Record the generator output frequency and line-line and line-neutral voltages.

(3.) Calculate the percent droop for voltage and frequency with the following equations:

$$\text{Voltage droop \%} = \frac{\text{(No-Load Volts)} - \text{(Rated Capacity volts)}}{\text{(Service-Load Volts)}} \times 100$$

$$\text{Frequency droop \%} = \frac{\text{(No-Load Hertz)} - \text{(Rated Capacity hertz)}}{\text{(Service-Load hertz)}} \times 100$$

4. Repeat steps 1 through 3 two additional times without making any adjustments.

i. Frequency and Voltage Stability and Transient Response. Verify that the engine-generator set responds to addition and dropping of blocks of load in accordance with the transient response requirements. Document maximum voltage and frequency variation from bandwidth and verify that voltage and frequency return to and stabilize within the specified bandwidth, within the specified response time period. Document results in tabular form and with high resolution, high speed strip chart recorders or comparable digital recorders, as approved by the Contracting Officer. Tabular data shall include the following:

Ambient temperature (at 15 minute intervals).

Generator output current (before and after load changes).

Generator output voltage (before and after load changes).

Frequency (before and after load changes).

Generator output power (before and after load changes).

Graphic representations shall include the actual instrument trace of voltage and frequency showing: charts marked at start of test; observed steady-state band; mean of observed band; momentary overshoot and undershoot (generator terminal voltage and frequency) and recovery time for each load change together with the voltage and frequency maximum and minimum trace excursions for each steady state load condition prior to and immediately following each load change. Generator terminal voltage and frequency transient recovery time for each step load increase and

decrease.

(1.) Perform and record engine manufacturer's recommended prestarting checks and inspections.

(2.) Start the engine, make and record engine manufacturer's after-starting checks and inspections during a reasonable warm-up period and no load. Verify stabilization of voltage and frequency within specified bandwidths.

(3.) With the unit at no load, apply the Maximum Step Load Increase.

(4.) Apply load in steps equal to the Maximum Step Load Increase until the addition of one more step increase will exceed the Service Load.

(5.) Decrease load to the unit such that addition of the Maximum Step Load Increase will load the unit to 100% of Service Load.

(6.) Apply the Maximum Step Load Increase.

(7.) Decrease load to zero percent in steps equal to the Maximum Step Load Decrease.

(8.) Repeat steps 3. through 7.

i. Test Voltage Unbalance with Unbalanced Load (Line-to-Neutral) to the performance criteria specified in paragraph GENERATOR. Prototype test data is acceptable in lieu of the actual test. This test may be performed using any prime mover.

(1.) Start and operate the generator set at rate voltage, no load, rated frequency, and under control of the voltage regulator. Read and record the generator frequency, line-to-neutral voltages, and the line-to-line voltages.

(2.) Apply the specified load between terminals L1-L2, L2-L0, and L3-L0 in turn. Record all instrument readings at each line-neutral condition.

(3.) Express the greatest difference between any two of the line-to-line voltages and any two of the line-to-neutral voltages as a percent of rated voltage.

(4.) Compare the largest differences expressed in percent with the maximum allowable difference specified.

2.23 RESISTIVE LOAD BANK

2.23.1 Ratings and Components

Load bank shall be rated 1000 kW, 380 Volt, three phase, three wire, 50 Hz, and power factor 1.0 (resistive).

Load bank shall consist of outdoor load resistors, power control devices, cooling fan, and an indoor wall mounted operator interface panel.

2.23.2 Outdoor Unit

The outdoor resistors, controls, and fan shall be housed in a NEMA 3R weatherproof enclosure. The exhaust louvers shall be fabricated of stainless steel. The cooling fan shall be forced air and power being internally derived from the connected test power source. The load resistors shall be mounted independently so that removal of any resistor does not affect the operation of the load bank.

2.23.3 Indoor Unit

The indoor panel enclosure shall be NEMA-12. The panel shall contain LCD graphic display screen, control keypad, audible input signal, LED operational indicators, and lamp test components.

PART 3 EXECUTION

3.1 GENERAL INSTALLATION

Installation shall provide clear space for operation and maintenancein accordance with NFPA 70 for the Power plant. Installation of pipe, duct, conduit, and ancillary equipment shall be configured to facilitate easy removal and replacement of major components and parts of the engine-generator set.

3.2 PIPING INSTALLATION

Piping shall be welded. Connections at valves shall be flanged. Connections at equipment shall be flanged except that connections to the diesel engine may be threaded if the diesel-engine manufacturers standard connection is threaded. Except where otherwise specified, welded flanged fittings shall be utilized to allow for complete dismantling and removal of each piping system from the facility without disconnecting or removing any portion of any other system's equipment or piping. Connections to equipment shall be made with vibration-isolation-type flexible connectors. Piping and tubing shall be supported and aligned to prevent stressing of flexible hoses and connectors. Pipes extending through the roof shall be properly flashed. Piping shall be installed clear of windows, doors and openings, to permit thermal expansion and contraction without damage to joints or hangers, and shall be installed with a 15 mm (1/2 inch) drain valve with cap at each low point.

3.2.1 Support

Hangers, inserts, and supports shall be of sufficient size to accommodate any insulation and shall conform to MSS SP-58 and MSS SP-69. Supports shall be spaced not more than 2.1 m on center for pipes 50 mm (2 inches) in diameter or less, not more than 3.6 m on center for pipes larger than 50 mm (2 inches) but smaller than 100 mm (4 inches) in diameter, and not more than 5.2 m on center for pipes larger than 100 mm in diameter. Supports shall be provided at pipe bends or change of direction.

3.2.1.1 Ceiling and Roof

Exhaust piping shall be supported with appropriately sized Type 41 single pipe roll and threaded rods; all other piping shall be supported with appropriately sized Type 1 clevis and threaded rods.

3.2.1.2 Wall

Wall supports for pipe shall be made by suspending the pipe from appropriately sized Type 33 brackets with the appropriate ceiling and roof pipe supports.

3.2.2 Flanged Joints

Flanges shall be Class 125 type, drilled, and of the proper size and configuration to match the equipment and diesel engine connections. Flanged joints shall be gasketed and made up square and tight.

3.2.3 Cleaning

After fabrication and before assembly, piping interiors shall be manually wiped clean of debris.

3.2.4 Pipe Sleeves

Pipes passing through construction such as ceilings, floors, or walls shall be fitted with sleeves. Each sleeve shall extend through and be securely fastened in its respective structure and shall be cut flush with each surface. The structure shall be built tightly to the sleeve. The inside diameter of each sleeve shall be minimum 15 mm (1/2 inch), and where pipes pass through combustible materials 25 mm (1 inch) larger than the outside diameter of the passing pipe or pipe insulation/covering.

3.3 ELECTRICAL INSTALLATION

Electrical installation shall comply with NFPA 70 for the Power plant, and Section 16402 INTERIOR DISTRIBUTION SYSTEM.

3.3.1 Vibration Isolation

Flexible fittings shall be provided for conduit, cable trays, and raceways attached to engine-generator sets. Metallic conductor cables installed on the engine generator set and from the engine generator set to equipment not mounted on the engine generator set shall be flexible stranded conductor. Terminations of conductors on the engine generator set shall be crimp-type terminals or lugs.

3.4 ONSITE INSPECTION AND TESTS

3.4.1 Test Conditions

3.4.1.1 Data

Measurements shall be made and recorded of all parameters necessary to verify that each set meets specified parameters. If the results of any test step are not satisfactory, adjustments, replacements, or repairs shall be made and the step repeated until satisfactory results are obtained. Unless otherwise indicated, data shall be recorded in 15 minute intervals during engine-generator set operation and shall include: readings of all engine-generator set meters and gauges for electrical and power parameters; oil pressure; ambient temperature; and engine temperatures available from meters and gauges supplied as permanent equipment on the engine-generator set.Electrical measurements shall be performed in accordance with IEEE Std 120. Definitions of terms are in accordance with IEEE Std 100. Temperature limits in the rating of electrical equipment and for the

evaluation of electrical insulations shall be in accordance with IEEE Std 1.

3.4.1.2 Contractor Supplied Items

The Contractor shall provide equipment and supplies required for inspections and tests including fuel, test instruments, and loadbanks at the specified power factors.

3.4.1.3 Instruments

Readings of panel gauges, meters, displays, and instruments provided as permanent equipment shall be verified during test runs, using test instruments of greater precision and accuracy. Test instrument accuracy shall be within the following: current plus or minus 1.5%, voltage plus or minus 1.5%, real power plus or minus 1.5%, reactive power plus or minus 1.5%, power factor plus or minus 3%, frequency plus or minus 0.5%. Test instruments shall be calibrated by a recognized standards laboratory within 30 days prior to testing.

3.4.1.4 Sequence

The sequence of testing shall be as specified in the approved testing plan unless variance is authorized by the Contracting Officer. Field testing shall be performed in the presence of the Contracting Officer. Tests may be scheduled and sequenced in order to optimize run-time periods; however, the following general order of testing shall be followed: Construction Tests; Inspections; Pre-operational Tests; Safety Run Tests; Performance Tests; and Final Inspection.

3.4.2 Construction Tests

Individual component and equipment functional tests for fuel piping, coolant piping, and lubricating-oil piping, electrical circuit continuity, insulation resistance, circuit protective devices, and equipment not provided by the engine-generator set manufacturer shall be performed prior to connection to the engine-generator set.

3.4.2.1 Piping Test

a. Lube-oil and fuel-oil piping shall be flushed with the same type of fluid intended to flow through the piping, until the outflowing fluid has no obvious sediment or emulsion.

b. Fuel piping which is external to the engine-generator set shall be tested in accordance with NFPA 30 for the Power plant. All remaining piping which is external to the engine-generator set shall be pressure tested with air pressure at 150% of the maximum anticipated working pressure, but not less than 1.03 MPa, for a period of 2 hours to prove the piping has no leaks. If piping is to be insulated, the test shall be performed before the insulation is applied.

3.4.2.2 Electrical Equipment Tests

a. Low-voltage cable insulation integrity tests shall be performed for cables connecting the generator breaker to the distribution bus. Low-voltage cable, complete with splices, shall be tested for insulation resistance after the cables are installed, in their final configuration, ready for connection to the equipment, and

prior to energization. The test voltage shall be 500 volts dc, applied for one minute between each conductor and ground and between all possible combinations conductors in the same trench, duct, or cable, with all other conductors in the same trench, duct, or conduit. The minimum value of insulation shall be:

R in megohms = (rated voltage in kV + 1) x 304,800/(length of cable in meters)

R in megohms = (rated voltage in kV + 1) x 1000/(length of cable in feet)

Each cable failing this test shall be repaired or replaced. The repair cable shall be retested until failures have been eliminated.

d. Circuit breakers and switchgear shall be examined and tested in accordance with the manufacturer's published instructions for functional testing.

3.4.3 Inspections

The following inspections shall be performed jointly by the Contracting Officer and the Contractor, after complete installation of each engine-generator set and its associated equipment, and prior to startup of the engine-generator set. Checks applicable to the installation shall be performed. The results of those which are physical inspections (I) shall be documented by the Contractor and submitted in accordance with paragraph SUBMITTALS. The Contractor shall present manufacturer's data for the inspections designated (D) at the time of inspection. Inspections shall verify that equipment type, features, accessibility, installation and condition are in accordance with the contract specification. Manufacturer's statements shall certify provision of features which cannot be verified visually.

1.	Drive belts.	(I)
2.	Governor type and features.	(I)
3.	Engine timing mark.	(I)
4.	Starting motor.	(I)
5.	Starting aids.	(I)
6.	Coolant type and concentration.	(D)
7.	Radiator drains.	(I)
8.	Block coolant drains.	(I)
9.	Coolant fill level.	(I)
10.	Coolant line connections.	(I)
11.	Coolant hoses.	(I)
12.	Combustion air filter.	(I)
13.	Intake air silencer.	(I)
14.	Lube oil type.	(D)
15.	Lube oil sump drain.	(I)
16.	Lube-oil filter.	(I)
17.	Lube-oil level indicator.	(I)
18.	Lube-oil fill level.	(I)
19.	Lube-oil line connections.	(I)
20.	Lube-oil lines.	(I)
21.	Fuel type.	(D)
22.	Fuel-level.	(I)
23.	Fuel-line connections.	(I)
24.	Fuel lines.	(I)
25.	Fuel filter.	(I)

26. Access for maintenance. (I)
27. Voltage regulator. (I)
28. Battery-charger connections. (I)
29. Wiring & terminations. (I)
30. Instrumentation. (I)
31. Hazards to personnel. (I)
32. Base. (I)
33. Nameplates. (I)
34. Paint. (I)
35. Exhaust-heat system. (I)
36. Exhaust muffler. (I)
37. Switchboard. (I)
38. Switchgear. (I)
39. Access provided to controls. (I)
40. Enclosure is weather resistant. (I)
41. Engine & generator mounting bolts (application). (I)

3.4.4 Pre-operational Tests

3.4.4.1 Protective Relays

Protective relays shall be visually and mechanically inspected, adjusted, tested, and calibrated in accordance with the manufacturer's published instructions. Tests shall include pick-up, timing, contact action, restraint, and other aspects necessary to ensure proper calibration and operation. Relay settings shall be implemented in accordance with the installation coordination study. Relay contacts shall be manually or electrically operated to verify that the proper breakers and alarms initiate. Relaying current transformers shall be field tested in accordance with IEEE C57.13.1.

3.4.4.2 Engine-Generator Connection Coupling Test

When the generator provided is a two-bearing machine, the engine-generator connection coupling shall be inspected and checked by dial indicator to prove that no misalignment has occurred. The dial indicator shall measure variation in radial positioning and axial clearance between the coupling halves. Readings shall be taken at four points, spaced 90 degrees apart. Solid couplings and pin-type flexible couplings shall be aligned within a total indicator reading of 0.012 to 0.025 mm for both parallel and angular misalignment. For gear-type or grid-type couplings, 0.05 mm will be acceptable.

3.4.5 Safety Run Test

For the following tests, if any parts are changed, or adjustments made to the generator set, its controls, or auxiliaries, the associated safety tests shall be repeated.

a. Start the engine, record the starting time, make and record engine manufacturer's after-starting checks and inspections during a reasonable warm-up period.

b. Operate the engine generator-set for at least 2 hours at 75% of Service Load.

c. Verify proper operation and setpoints of gauges and instruments.

d. Verify proper operation of ancillary equipment.

e. Manually adjust the governor to increase engine speed past the overspeed limit. Record the RPM at which the engine shuts down.

f. Start the engine, record the starting time, make and record engine manufacturer's after-starting checks and inspections and operate the engine generator-set for at least 15 minutes at 75% of Service Load.

g. Manually adjust the governor to increase engine speed to within 2% of the overspeed trip speed previously determined and operate at that point for 5 minutes. Manually adjust the governor to the rated frequency.

h. Shut down the engine. Remove the time-delay low lube oil pressure alarm bypass and try to start the engine.

i. Start the engine, record the starting time, make and record engine manufacturer's after-starting checks and inspections and operate the engine generator-set for at least 15 minutes at 75% of Service Load.

j. Close the manifold shutoff valve. Slowly allow the pressure in the manifold to bleed off through the bleed valve while watching the pressure gauge. Record the pressure at which the engine shuts down. Catch oil spillage from the bleed valve in a container. Add the oil from the container back to the engine, remove the manifold, and reinstall the engine's oil pressure sensor on the engine.

k. Start the engine, record the starting time, make and record engine manufacturer's after-starting checks and inspections and operate the engine generator-set for at least 15 minutes at 100% of Service Load. If a sound limiting enclosure is provided, the enclosure, the muffler, and intake silencer shall be modified or replaced as required to meet the sound requirements contained within this specification.

3.4.6 Performance Tests

In the following tests, where measurements are to be recorded after stabilization of an engine-generator set parameter (voltage, frequency, current, temperature, etc.), stabilization is considered to have occurred when measurements are maintained within the specified bandwidths or tolerances, for a minimum of four consecutive readings. For the following tests, if any parts are changed, or adjustments made to the generator set, its controls, or auxiliaries, the associated tests shall be repeated.

3.4.6.1 Continuous Engine Load Run Test

Test the engine-generator set and ancillary systems at service load to demonstrate durability; verify that heat of extended operation does not adversely affect or cause failure in any part of the system; and check all parts of the system. Data taken at 15 minute intervals shall include the following:

Electrical: Output amperes, voltage, real and reactive power, power factor, frequency.

Pressure: Lube-oil.

Temperature: Coolant.
Lube-oil.
Exhaust.
Ambient.

a. Perform and record engine manufacturer's recommended prestarting checks and inspections. Include as a minimum checking of coolant fluid, fuel, and lube-oil levels.

b. Start the engine, make and record engine manufacturer's after-starting checks and inspections during a reasonable warmup period.

c. Operate the engine generator-set for 50 minutes at 75% of Service Load.

d. Increase load to 100% of Service Load and operate the engine generator-set for 1 hour 40 minutes.

e. For prime rated units, increase load to 110% of Service Load and operate the engine generator-set for 50 minutes.

f. Decrease load to 100% of Service Load and operate the engine generator-set for 50 minutes or until all temperatures have stabilized.

g. Remove load from the engine-generator set.

3.4.6.2 Governor Adjustment Range Test

a. While operating at no load, verify that the governor adjusts from 90% to 110% of rated frequency.

b. Increase load to 100% of Rated Output Capacity. Verify that the governor adjusts from 90% to 110% of rated frequency.

3.4.7 Parallel Operation Test

Test the capability of each engine-generator set to parallel and share load with other generator sets, individually and in all combinations. This test must be performed with the voltage regulator and governor adjustment settings used for the Frequency and Voltage Stability and Transient Response test. If settings are changed during the performance of this test, a voltage and frequency stability and transient response test must be performed for each engine generator set using the setting utilized in this test. During operations record load-sharing characteristics of each set in parallel operation. Data taken shall include the following:

(a.) Ambient temperature (at 15 minute intervals).

(b.) Generator output current (before and after load changes).

(c.) Generator output voltage (before and after load changes).

(d.) Power division and exchange between generator sets.

(e.) Real power (watts) and reactive power (vars) on each set.

3.4.7.1 Combinations

Connect each set, while operating at no load, parallel with one other set in the system, operating at service load, until all possible two-unit-in-parallel combinations have been achieved. Verify stabilization of voltage and frequency within specified bandwidths and proportional sharing of real and reactive loads. Document stabilization of voltage and frequency within specified bandwidth, the active power division, active power exchange, reactive power division, and voltage and frequency stability and transient response in the following steps for each combination.

a. Divide the load proportionally between the sets and operate in parallel for 15 minutes.

b. Increase the load, in steps equal to the Maximum Step Increase, until each set is loaded to its service load.

c. Decrease the load, in steps equal to the Maximum Step Decrease, until each set is loaded to approximately 25% of its service load.

d. Increase the load, in steps equal to the Maximum Step Increase, until each set is loaded to approximately 50% of its service load Verify stabilization of voltage and frequency within specified bandwidths and proportional sharing of real and reactive load.

e. Reduce the sum of the loads on both sets to the output rating of the smaller set.

f. Transfer a load equal to the output rating of the smaller of the 2 sets to and from each set. Verify stabilization of voltage and frequency within specified bandwidths and proportional sharing of real and reactive load.

g. Document the active power division, active power exchange, reactive power division, and voltage and frequency stability and transient response .

3.4.7.2 Multiple Combinations

Connect each set, while operating at no load, parallel with all multiple combinations of all other set in the system, while operating at service load, until all multiple combinations of parallel operations have been achieved.

3.4.8 Automatic Operation Tests for Multiple Engine Generator Set Parallel Operation In Standalone Mode

The automatic operating system shall be tested to demonstrate loading and unloading, and paralleling of each engine-generator set. The loads for this test shall utilize load banks at the indicated power factor, and the loading sequence shall be the indicated sequence. During all operations load-sharing characteristics shall be recorded. Perform this test for a minimum of two successive, successful tests. Data taken shall include the following:

(1.) Ambient temperature (at 15 minute intervals).

(2.) Generator output current (before and after load changes).

(3.) Generator output voltage (before and after load changes).

(4.) Generator output frequency (before and after load changes).

(5.) Power division and exchange between generator sets.

(6.) Real and reactive power on each set.

a. Initiate loss of the preferred power source and verify the specified sequence of operation.

b. Verify resetting of automatic starting and transfer logic.

3.4.9 Automatic Operation Tests for Stand-Alone Operation

The automatic loading system shall be tested to demonstrate loading and unloading of each engine-generator set. The loads for this test shall utilize the actual loads to be served, and the loading sequence shall be the indicated sequence. Perform this test for a minimum of two successive, successful tests. Data taken shall include the following:

(a.) Ambient temperature (at 15 minute intervals).

(b.) Generator output current (before and after load changes).

(c.) Generator output voltage (before and after load changes).

(d.) Generator output frequency (before and after load changes).

a. Initiate loss of the primary power source and verify automatic sequence of operation.

b. Restore the primary power source and verify sequence of operation.

c. Verify resetting of controls to normal.

3.4.10 Final Testing and Inspection

a. Start the engine, record the starting time, make and record all engine manufacturer's after-starting checks and inspections during a reasonable warm-up period.

b. Increase the load in steps no greater than the Maximum Step Load Increase to 100% of Service Load, and operate the engine-generator set for at least 30 minutes. Measure the vibration at the end bearings (front and back of engine, outboard end of generator) in the horizontal, vertical, and axial directions. Verify that the vibration is within the same range as previous measurements and is within the required range.

c. Remove load and shut down the engine-generator set after the recommended cool down period.

d. Remove the lube oil filter and have the oil and filter examined by the engine manufacturer for excessive metal, abrasive foreign particles, etc. Any corrective action shall be verified for effectiveness by running the engine for 8 hours at Service Load,

then re-examining the oil and filter.

e. Remove the fuel filter and examine the filter for trash, abrasive foreign particles, etc.

f. Visually inspect and check engine and generator mounting bolts for tightness and visible damage.

g. Replace air, oil, and fuel filters with new filters.

3.5 RESISTIVE LOAD BANK

3.5.1 Mounting

The load bank shall be installed on a concrete pad suitable for supporting the structure.

3.5.2 Wiring

Connect the load bank condutors from the power source to the load bank main bus connection points. Ground the load bank per National Electrical Code.

Connect the load bank control wiring per the manufacturer requirements from the indoor panel to outdoor resistor load bank.

3.6 POSTED DATA AND INSTRUCTIONS

Two sets of instructions/data shall be typed in A 4 format, laminated in weatherproof plastic, and placed in three-ring vinyl binders. The binders shall be placed as directed by the Contracting Officer. The instructions shall be in place prior to acceptance of the engine generator set installation. First set shall include a one-line diagram, wiring and control diagrams and a complete layout of the system. Second set shall include the condensed operating instructions describing manufacturer's pre-start checklist and precautions; startup procedures for test-mode, manual-start mode, and automatic-start mode (as applicable); running checks, procedures, and precautions; and shutdown procedures, checks, and precautions. Instructions shall include procedures for interrelated equipment (such as heat recovery systems, co-generation, load-shedding, and automatic transfer switches).

3.7 ONSITE TRAINING

The Contractor shall conduct training course for operating staff as designated by the Contracting Officer. The training period shall consist of a total 8 hours of normal working time and shall start after the system is functionally completed but prior to final acceptance. All operation and maintenance manuals shall bee approved and made available for the training course. All posted instructions shall be approved and posted prior to the beginning date of the training course. The training course schedule shall be coordinated with the Using Service's work schedule, and submitted for approval 14 days prior to beginning date of proposed beginning date of training. The course instructions shall cover pertinent points involved in operating, starting, stopping, servicing the equipment, as well as major elements of the operation and maintenance manuals. Additionally, the course instructions shall demonstrate routine maintenance procedures as described in the operation and maintenance manuals and installation of spare parts. Two copies of a video tape of the manufacturers operating and maintenance training course shall be submitted.

3.8 ACCEPTANCE

Final acceptance of the engine-generator set will not be given until the contractor has successfully completed all tests and all defects in installation material or operation have been corrected.

-- End of Section --

SECTION 16272

UNIT SUB-STATION TYPE TRANSFORMERS

PART 1 GENERAL

1.1 REFERENCES

The publications listed below form a part of this specification to the extent referenced. The publications are referred to within the text by the basic designation only.

Unless noted otherwise, all material used shall be in compliance with the requirements of the applicable German (DIN) Standards. In the event DIN Standard material is unavailable, contractor may then select comparable British Standard (BS), or Underwriters Laboratories Inc. (UL) listed material. Equipment enclosure types shall be in compliance with the National Electrical Manufacturer's Association (NEMA) or the International Electro-Technical Committee (IEC) standards. Material and equipment installed under this contract shall be for the appropriate application.

AMERICAN NATIONAL STANDARDS INSTITUTE (ANSI)

ANSI C57.12.00	(2000) IEEE Standard General Requirements for Liquid-Immersed Distribution, Power, and Regulating Transformers
ANSI C57.12.70	Terminal Markings and Connections for Distribution and Power Transformers
ANSI C57.12.80	Terminology for Power and Distibution Transformers
ANSI C57.12.90	(1990) Test Code for Liquid-Immersed Distribution, Power and Regulating Transformers and Guide for Short-Circuit Testing of Distribution and Power Transformers
ANSI C57.92	IEEE Guide for Loading Mineral Oil Immersed Power Transformers Up to and Including 100 MVA with 55 C or 65 C Average Winding Rise

1.2 SUBMITTALS

Government approval is required for submittals with a "G" designation; submittals not having a "G" designation are for information only. When used, a designation following the "G" designation identifies the office that will review the submittal for the Government. The following shall be submitted in accordance with Section 01330 SUBMITTAL PROCEDURES:

SD-02 Shop Drawings

Transformer Shop Drawings;

Complete outline and arrangement drawings of the transformer

showing plan and elevation views. Include overall dimensions, conduit or cable entrance locations and dimensions, and weights as required.

Wiring Diagrams

Electrical wiring and connection diagrams for all applicable accessories as required.

SD-03 Product Data

Nameplate

Nameplate drawing with connection schematic as required.

SD-10 Operations and Maintenance Data

Instruction Manuals

Instruction manuals describing the orderly assembly, installation, and connection of the transformer.

1.3 DEFINITIONS

Terms used in this section shall be in accordance with ANSI C57.12.70.

1.4 SYSTEM DESCRIPTION

Provide Liquid-immersed, unit-substation type transformers in accordance with these specifications.

Transformer shall be suitable for step-up or step-down operation, as indicated on Drawings.

1.5 INSTRUCTION MANUALS

Instruction manuals shall include as a minimum, information for the following equipment:

a. Details of the transformer.
b. Details of major and serviceable components.
c. Accessories.

Instructions shall describe receipt, handling, care, inspection, installation, operation, and maintenance of the transformer and accessories.

1.6 QUALITY ASSURANCE

Manufacturer shall have a thoroughly documented, written quality assurance and inspection program. Documentation shall be available to the Project Engineer upon request.

1.7 FACTORY TESTING

Tests shall be performed in accordance with all applicable standards.

The manufacturer shall perform all routine tests as described in ANSI C57.12.00, Table 16 plus the additional test listed below on every transformer supplied under these specifications.

a. Ratio Test.
b. Polarity and Phase Rotation Test.
c. No-Load Loss and Excitation Current Test.
d. Low Frequency Dielectric Tests which include:

(1) Applied Potential Test.
(2) Induced Potential Test.

e. Resistance Measurements Test.
f. Impedance Voltage and Load Loss Test.
g. Dissipation Factor Test(Capacitance Bridge Method).
h. Tank Weld seams are to be checked for holes using a dye penetrant prior to vacuum filling.
i. Mechanical Pressure Leak Test(minimum 51.7 kPa for 24 hours on tank and cooling panels).

The following design tests shall be performed only if test reports are not available on duplicate or essentially duplicate transformers.

a. Temperature Test.
b. Audible Sound Level Test.

Certified Test Reports shall be provided upon request.

1.8 MANUFACTURER QUALIFICATIONS

The manufacturer shall be regularly engaged in, and have a minimum of 10 years experience in the production of liquid filled distribution transformers in the type and size(s) specified herein.

PART 2 PRODUCTS

2.1 UNIT SUBSTATION TYPE TRANSFORMERS

Electrical Characteristics

a. KVA ratings as indicated on Drawings.
b. Three Phase.
c. Mineral Oil.
d. Temperature Rise 55/65 degree C Rise
e. Cooling: OISC/FA.
f. Frequency: 50 hertz.
g. The winding conductor shall be the manufacturers standard electrical grade conductor material: Aluminium.
h. 15000/8660 High-voltage and BIL: 95.
i. High voltage windings shall be as shown on Drawings.
j. Taps for De-energized Operation shall be 2-2.5% FCAN & 2-2.5% FCBN.
k. Impedance shall be 5.75% plus or minus ANSI standard tolerance of 7.5%.
l. 380Y Low-voltage and BIL: 30.
m. Low-voltage windings shall be as shown on Drawings.
n. Designed for step-up or step-down operation as indicated on Drawings.

2.2 MECHANICAL ARRANGEMENT

High voltage spade bushings shall be enclosed in a full length air chamber as required for application.

Low voltage spade bushings shall be enclosed in a full length air chamber as required for application.

2.3 MINIMUM ACCESSORIES

a. Dial type thermometer with two contacts.
b. Liquid level gauge.
c. Pressure-vacuum gauge.
d. 25 mm (1 inch) lower drain valve with sample valve.
e. Pressure relief valve.
f. Non-PCB label.
g. 25 mm (1 inch) upper fill plug.
h. 18 kV distribution class arresters.
i. 220 VAC single phase standard fan package.
j. Ground bus in HV and LV air terminal chambers.

2.4 ENCLOSURE CONSTRUCTION

The transformer base, tank, and cabinet shall be manufactured of cold rolled mild steel. Minimum cabinet material thickness shall be 1.95 mm (13 gauge).

Radiators, if required shall be 1.1 mm (18 gauge) mild steel. Radiators shall be of the flat panel, common header type.

2.5 CORROSION PROTECTION

The paint system shall consist of a rust inhibiting primer(0.038 mm minimum) applied over a shot-blasted surface with an acrylic enamel top coat (0.076 mm minimum). The final color shall be ASA 61 Grey.

2.6 TRANSFORMER SECTION

The following specifies the construction requirements for the design, manufacturing, and testing of outdoor, three-phase, liquid-filled, unit substation or substation type, distribution transformers.

a. The transformers shall be manufactured in strict accordance with applicable ANSI/IEEE and NEMA.
b. Transformers shall be supplied with a welded main tank cover and be of a sealed-tank construction designed to withstand a pressure of 10 psig without permanent distortion. The tank cover shall be domed to shed water and be supplied with a tamper-resistant access handhole sized to allow access to internal bushing and switching connections. The transformers shall remain effectively sealed for a top-oil temperature of -5 degrees C to +105 degrees C.
c. The transformer manufacturer shall certify that the transformer is Non-PCB containing no detectable PCB's. Do not provide non-flammable transformer liquids.
d. When high-voltage taps are specified above, full-capacity taps shall be provided with tap changing mechanism designed for de-energized operation. Then tapchanger operator handle shall be provided with means for padlocking.
e. The coil windings shall be of the two winding type, designed to reduce losses and manufactured with the conductor material as specified above. The windings shall incorporate a secondary sheet conductor to maximize short-circuit strength. All insulating materials shall be rated for 65 degrees C rise, 80 degrees C hot-spot operation.

f. The core assembly shall be a five legged, distributed gap, wound core, designed with a low flux density to minimize noise. The core material shall be high grade, grain oriented, non-aging silicon core steel with high magnetic permeability, low hysteresis and eddy current losses. Magnetic flux densities are to be kept well below saturation level to allow for minimum of 10 percent overvoltage excitation. The cores shall be properly annealed to reduce stresses induced during the manufacturing processes and reduce core losses.
g. The core frame shall be designed to provide maximum support of the core and coil assembly. The core frame shall be welded or bolted to ensure maximum short-circuit strength.
h. The core and coil assembly shall be designed and manufactured to meet the short-circuit requirements of ANSI C57.12.90. The core and coil assembly shall be baked in an oven prior to tanking to set the epoxy coating on the Kraft paper and remove moisture from the insulation prior to vacuum filling.
i. The transformer shall be vacuum filled with the appropriate fluid as indicated above. The process shall be of sufficient vacuum and duration to ensure that the core and coil assembly is free of moisture prior to filling the tank.
j. The transformer shall be thoroughly cleaned prior to painting with special attention given to removing chalk marks, weld slag, and any other contaminants. The tank and all metal parts shall be shot-blasted to white metal and immediately primed with an organic zinc primer. The finish coat shall consist of a minimum 2 mils of aliphatic polyurethane applied over a minimum of 3 mils of primer. The final color shall be as specified above.
k. Comply with ANSI C57.92 for loading mineral oil transformers.
l. Terminal markings and connections shall be in accordance with ANSI C57.12.80.

PART 3 EXECUTION

3.1 INSTALLATION

Electrical installations shall conform to IEEE, NFPA, or equivalent DIN, I.E.C., BS, or EN standards.

3.2 ACCEPTANCE

Acceptance of the transformers is contingent upon satisfactorily meeting these specifications and tests as specified herein.

-- End of Section --

SECTION 16370

ELECTRICAL DISTRIBUTION SYSTEM, AERIAL

PART 1 GENERAL

1.1 REFERENCES

The publications listed below form a part of this specification to the extent referenced. The publications are referred to within the text by the basic designation only.

AMERICAN NATIONAL STANDARDS INSTITUTE (ANSI)

ANSI C135.1	(1979) Galvanized Steel Bolts and Nuts for Overhead Line Construction
ANSI C135.14	(1979) Staples with Rolled or Slash Points for Overhead Line Construction
ANSI C135.2	(1999) Threaded Zinc-Coated Ferrous Strand-Eye Anchor Rods and Nuts for Overhead Line Construction
ANSI C135.22	(1988) Galvanized Ferrous Pole-Top Insulator Pins with Lead Threads for Overhead Line Construction
ANSI C135.4	(1987) Zinc-Coated Ferrous Eyebolts and Nuts for Overhead Line Construction
ANSI C29.1	(1988; R 2002) Test Methods for Electrical Power Insulators
ANSI C29.2	(1992; R 1999) Insulators - Wet-Process Porcelain and Toughened Glass - Suspension Type
ANSI C29.5	(1984; R 2002) Wet-Process Porcelain Insulators - Low- and Medium-Voltage Types
ANSI C29.6	(1996; R 2002) Wet-Process Porcelain Insulators - High-Voltage Pin Type
ANSI C29.8	(1985; R 2002) Apparatus, Cap and Pin Type Wet-Process Porcelain Insulators -
ANSI C29.9	(1983; R 2002) Wet-Process Porcelain Insulators - Apparatus, Post-Type
ANSI C37.32	(2002) High-Voltage Switches, Bus Supports, and Accessories - Schedules of Preferred Ratings, Construction Guidelines and Specifications
ANSI C57.12.20	(1997) Overhead Type Distribution

	Transformers, 500 KVA and Smaller: High Voltage 34 500 Volts and Below: Low Voltage, 7970/13 800 Y Volts and Below
ANSI C62.2	(1987; R 1994) Guide for the Application of Gapped Silicon-Carbide Surge Arresters for Alternating Current Syste

AMERICAN SOCIETY OF CIVIL ENGINEERS (ASCE)

ASCE 72	(1990) Design of Steel transmission Pole structural.

AMERICAN WATER WORKS ASSOCIATION(AWWA)

AWPA C25	(2001) Sawn Crossarms - Preservative Treatment by Pressure Processes

ASTM INTERNATIONAL (ASTM)

ASTM A 123/A 123M	(2001) Zinc (Hot-Dip Galvanized) Coatings on Iron and Steel Products
ASTM A 153/A 153M	(2001) Zinc Coating (Hot-Dip) on Iron and Steel Hardware
ASTM A 575	(1996; R 2002) Steel Bars, Carbon, Merchant Quality, M-Grades
ASTM A 576	(1990b; R 2000) Steel Bars, Carbon, Hot-Wrought, Special Quality
ASTM B 1	(1995) Hard-Drawn Copper Wire
ASTM B 228	(2002) Concentric-Lay-Stranded Copper-Clad Steel Conductors
ASTM B 230/B 230M	(1999) Aluminum 1350-H19 Wire for Electrical Purposes
ASTM B 231/B 231M	(1999) Concentric-Lay-Stranded Aluminum 1350 Conductors
ASTM B 416	(1998; R 2002) Concentric-Lay-Stranded Aluminum-Clad Steel Conductors
ASTM B 8	(1999) Concentric-Lay-Stranded Copper Conductors, Hard, Medium-Hard, or Soft
ASTM D 1654	(1992; R 2000) Evaluation of Painted or Coated Specimens Subjected to Corrosive Environments
ASTM D 4059	(2000) Analysis of Polychlorinated Biphenyls in Insulating Liquids by Gas Chromatography
ASTM D 923	(1997) Sampling Electrical Insulating Liquids

BRITISH STANDARDS INSTITUTION (BSI)

BS 215	(1970) Specification for aluminum conductors, steel-reinforced for overhead power transmission.
BS 7430	(1998) Code of Practice for Earthing
BS 6651	(1999) Code Of Practice For Protection Of Structures Against Lightning

DUETSCHES INSTITUTE FUR NORMUNG (DIN)

DIN 48201	(1981) Stranded Conductors.
DIN 48204	(1984) Aluminum Conductors, steel reinforced.

INTERNATIONAL ELECTROTECHNICAL COMMISSION (IEC)

IEC 60076	(1993) Power tranformers
IEC 60726	(1982)Dry type power transformers
IEC 282-1	(1994) High voltage fuses-current Limiting fuses.
IEC 60120	(1984) Dimentions of ball and socket couplings of string insulator units.
IEC 61466	(1997) Composite string insulator units for overhead lines with voltage greater than 1000V.
IEC 61230	(1993) Liveworking-Portable equipment for earthing or earth short circuiting.

INSTITUTE OF ELECTRICAL AND ELECTRONICS ENGINEERS (IEEE)

IEEE C2	(2002) National Electrical Safety Code
IEEE C37.34	(1994) Test Code for High-Voltage Air Switches
IEEE C37.41	(2000) Design Tests for High-Voltage Fuses, Distribution Enclosed Single-Pole Air Switches, Fuse Disconnecting Switches, and Accessories
IEEE C37.63	(1997) Requirements for Overhead, Pad-Mounted, Dry-Vault, and Submersible Automatic Line Sectionalizers for AC Systems
IEEE C57.12.00	(2000) General Requirements for Liquid-Immersed Distribution, Power, and Regulating Transformers

IEEE C57.13.2	(1991) Standard Conformance Test Procedures for Instrument Transformers
IEEE C57.19.00	(1991; R 1997) Standard General Requirements and Test Procedures for Outdoor Power Apparatus Bushings
IEEE C57.19.01	(2000) Performance Characteristics and Dimensions for Outdoor Apparatus Bushings
IEEE C57.98	(1994) Guide for Transformer Impulse Tests
IEEE C62.1	(1989; R 1994) Gapped Silicon-CarbideSurge Arresters for AC Power Circuits
IEEE C62.11	(1999) Metal-Oxide Surge Arresters for Alternating Current Power Circuits
IEEE Std 100	(1997) IEEE Standard Dictionary of Electrical and Electronics Terms
IEEE Std 242	(2001) Recommended Practice for Protection and Coordination of Industrial and Commercial Power Systems - Buff Book
IEEE Std 399	(1997) Recommended Practice for Power Systems Analysis - Brown Book
IEEE Std 81	(1983) Guide for Measuring Earth Resistivity, Ground Impedance, and Earth Surface Potentials of a Ground System (Part 1)Normal Measurements

NATIONAL ELECTRICAL MANUFACTURERS ASSOCIATION (NEMA)

NEMA HV 2	(1991; R 1996; R 2002) Application Guide for Ceramic Suspension Insulators
NEMA LA 1	(1992; R 1999) Surge Arresters
NEMA SG 2	(1993) High Voltage Fuses
NEMA WC 74	(2000) 5-46 kV Shielded Power Cable for Use in the Transmission and Distribution of Electric Energy

NATIONAL FIRE PROTECTION ASSOCIATION (NFPA)

NFPA 70	(2005) National Electrical Code

U.S. DEPARTMENT OF AGRICULTURE (USDA)

RUS Bull 1728H-701	(1993) Wood Crossarms (Solid and Laminated), Transmission Timbers and Pole Keys

UNDERWRITERS LABORATORIES (UL)

UL 467	(1993; R 2001) Grounding and Bonding

	Equipment
UL 486A	(1997; Rev Jun 1997) Wire Connectors for Use with Aluminum Conductors
UL 486B	(1997; Rev thru May 2001) Wire Connectors for Use with Aluminum Conductors

1.2 GENERAL REQUIREMENTS

1.2.1 Terminology

Terminology used in this specification is as defined in IEEE Std 100.

1.2.2 Service Conditions

Items provided under this section shall be specifically suitable for the following service conditions. Seismic details shall conform to Sections 13080 SEISMIC PROTECTION FOR MISCELLANEOUS EQUIPMENT, 15070 SEISMIC PROTECTION FOR MECHANICAL EQUIPMENT, and 16070 SEISMIC PROTECTION FOR ELECTRICAL EQUIPMENT.

a. Fungus Control None.

b. Altitude 977 m.

c. Ambient Temperature -6 degrees C to +40 degrees C.

d. Frequency 50 Hz.

e. Seismic Parameters Zone 4.

f. Corrosive Areas None.

g. Wind Load 66 knots (122 kph)

H. Snow Load 75 kg/sq. meter

1.3 SUBMITTALS

Government approval is required for submittals with a "G" designation; submittals not having a "G" designation are for information only. When used, a designation following the "G" designation identifies the office that will review the submittal for the Government. The following shall be submitted in accordance with Section 01330 SUBMITTAL PROCEDURES:

SD-02 Shop Drawings

Electrical Distribution System

Detail drawings consisting of equipment drawings, illustrations, schedules,instructions,diagrams and other information necessary to define the installation and enable the Government to check conformity with the requirements of the contract drawings. Detail drawings shall as a minimum include:

a. Poles.

b. Calculations for steel poles and power installed screw

foundations.

c. Crossarms.

d. Transformers.

e. Automatic circuit reclosers.

f. Pole top switches.

g. Conductors.

h. Insulators.

i. Surge arresters.

If departures from the contract drawings are deemed necessary by the Contractor, complete details of such departures shall be submitted with the detail drawings. Approved departures shall be made at no additional cost to the Government.

Detail drawings shall show how components are assembled, function together and how they will be installed on the project. Data and drawings for component parts of an item or system shall be coordinated and submitted as a unit. Data and drawings shall be coordinated and included in a single submission. Multiple submissions for the same equipment or system are not acceptable except where prior approval has been obtained from the Contracting Officer. In such cases, a list of data to be submitted later shall be included with the first submission. Detail drawings shall consist of the following:

a. Detail drawings showing physical arrangement, construction details, connections, finishes, materials used in fabrication, provisions for conduit or busway entrance, access requirements for installation and maintenance, physical size, electrical characteristics, foundation and support details, and equipment weight. Drawings shall be drawn to scale and/or dimensioned. Optional items shall be clearly identified as included or excluded.

b. Internal wiring diagrams of equipment showing wiring as actually provided for this project. External wiring connections shall be clearly identified.

SD-03 Product Data

Fault Current Analysis

Protective Device

Coordination Study

The study shall be submitted along with protective device equipment submittals. No time extensions or similar contract modifications will be granted for work arising out of the requirements for this study. Approval of protective devices proposed shall be based on recommendations of this study. The Government shall not be held responsible for any changes to equipment, device settings, ratings, or additional labor for

installation of equipment or devices ordered and/or procured prior to approval of the study.

Nameplates

Catalog cuts, brochures, circulars, specifications, product data, and printed information in sufficient detail and scope to verify compliance with the requirements of the contract documents.

Material and Equipment

A complete itemized listing of equipment and materials proposed for incorporation into the work. Each entry shall include the item number, the quantity of items proposed, and the name of the manufacturer of the item.

General Installation Requirements

As a minimum, installation procedures for transformers and reclosers. Procedures shall include diagrams, instructions, and precautions required to install, adjust, calibrate, and test the devices and equipment.

SD-07 Certificates

Material and Equipment

Where materials or equipment are specified to conform to the standards of the Underwriters Laboratories (UL) or to be constructed or tested, or both, in accordance with the standards of the American National Standards Institute (ANSI), the Institute of Electrical and Electronics Engineers (IEEE), or the National Electrical Manufacturers Association (NEMA), the Contractor shall submit proof that the items provided under this section of the specifications conform to such requirements. The label of, or listing by, UL will be acceptable as evidence that the items conform thereto. Either a certification or a published catalog specification data statement, to the effect that the item is in accordance with the referenced ANSI or IEEE standard, will be acceptable as evidence that the item conforms thereto. A similar certification or published catalog specification data statement to the effect that the item is in accordance with the referenced NEMA standard, by a company listed as a member company of NEMA, will be acceptable as evidence that the item conforms thereto. In lieu of such certification or published data, the Contractor may submit a certificate from a recognized testing agency equipped and competent to perform such services, stating that the items have been tested and that they conform to the requirements listed, including methods of testing of the specified agencies.

1.4 SUBMITTALS

The following shall be submitted in accordance with Section 01335 SUBMITTAL PROCEDURES for design built project:

SD-02 Shop Drawings

As-Built Drawings; G,

The as-built drawings shall be a record of the construction as installed. The drawings shall include the information shown on the contract drawings as well as deviations, modifications, and changes from the contract drawings, however minor. The as-built drawings shall be kept at the job site and updated daily. The as-built drawings shall be a full sized set of prints marked to reflect deviations, modifications, and changes. The as-built drawings shall be complete and show the location, dimensions, part identification, and other information. Additional sheets may be added. The as-built drawings shall be jointly inspected for accuracy and completeness by the Contractor's quality control representative and by the Contracting Officer prior to the submission of each monthly pay estimate. Upon completion of the work, the Contractor shall submit three full sized sets of the marked prints to the Contracting Officer for approval. If upon review, the as-built drawings are found to contain errors and/or omissions, they will be returned to the Contractor for correction. The Contractor shall correct and return the as-built drawings to the Contracting Officer for approval within ten calendar days from the time the drawings are returned to the Contractor.

SD-06 Test Reports

Factory Tests

Certified factory test reports shall be submitted when the manufacturer performs routine factory tests, including tests required by standards listed in paragraph REFERENCES. Results of factory tests performed shall be certified by the manufacturer, or an approved testing laboratory, and submitted within 7 days following successful completion of the tests specified in applicable publications or in these specifications.

Field Testing

A proposed field test plan 30 days prior to testing the installed system. No field test shall be performed until the test plan is approved. The test plan shall consist of complete field test procedures including tests to be performed, test equipment required, and tolerance limits.

Operating Tests; G

Six copies of the information described below in 215.9 by 279.4 mm (8-1/2 by 11 inch) binders, and including a separate section for each test. Sections shall be separated by heavy plastic dividers with tabs.

a. A list of equipment used, with calibration certifications.

b. A copy of measurements taken.

c. The dates of testing.

d. The equipment and values to be verified.

e. The condition specified for the test.

f. The test results, signed and dated.

g. A description of adjustments made.

SD-10 Operation and Maintenance Data

Electrical Distribution System

Copies of Operation and Maintenance manuals electrical distribution system shall be provided as outlined in section 01060 SPECIAL CLAUSES.

1.5 DELIVERY, STORAGE, AND HANDLING

Devices and equipment shall be visually inspected by the Contractor when received and prior to acceptance from conveyance. Stored items shall be protected from the environment in accordance with the manufacturer's published instructions. Damaged items shall be replaced. Oil filled transformers and switches shall be stored in accordance with the manufacturer's requirements. Metal poles shall be handled and stored in accordance with the manufacturer's instructions

1.6 EXTRA MATERIALS

One additional spare fuse or fuse element for each furnished fuse or fuse element shall be delivered to the Contracting Officer when the electrical system is accepted, except as specified below. Two complete sets of all special tools required for maintenance shall be provided, complete with a suitable tool box. Special tools are those that only the manufacturer provides, for special purposes (to access compartments, or operate, adjust, or maintain special parts).

Provide 10% of installed amount of the following: lightning arrestors, movable type fuses. Provide not less than 15 each wire connectors.

PART 2 PRODUCTS

2.1 GENERAL REQUIREMENTS

Products shall conform to the following requirements. Items of the same classification shall be identical including equipment, assemblies, parts, and components.

2.2 STANDARD PRODUCT

Material and equipment shall be the standard product of a manufacturer regularly engaged in the manufacture of the product and shall essentially duplicate items that have been in satisfactory use for at least 2 years prior to installation.

2.3 NAMEPLATES

2.3.1 General

Each major component shall have the manufacturer's name, address, type or style, model or serial number, and catalog number on a nameplate securely attached to the equipment. Equipment containing liquid-dielectrics shall have the type of dielectric on the nameplate. Nameplates shall be made of noncorrosive metal. As a minimum, nameplates shall be provided for

transformers, regulators, circuit breakers, capacitors, meters and switches.

2.3.2 Liquid-Filled Transformer Nameplates

Power transformers shall be provided in accordance with IEEE C57.12.00 or IEC 60076 and IEC 60726. Nameplates shall indicate the number of liters and composition of liquid-dielectric, and shall be permanently marked with a statement that the transformer dielectric to be supplied is non-polychlorinated biphenyl. If transformer nameplate is not so marked, the Contractor shall furnish manufacturer's certification for each transformer that the dielectric in non-PCB classified, with less than 50 ppm PCb content in accordance with paragraph LIQUID DIELECTRICS. Certifications shall be related to serial numbers on transformer nameplates. Transformer dielectric exceeding the 50 ppm PCB content or transformers without certification will be considered as PCB insulated and will not be accepted.

2.4 CORROSION PROTECTION

2.4.1 Ferrous Metal Materials

2.4.1.1 Hardware

Ferrous metal hardware shall be hot-dip galvanized in accordance with ASTM A 153/A 153M and ASTM A 123/A 123M.

2.4.1.2 Equipment

Equipment and component items, including but not limited to transformers and ferrous metal luminaires not hot-dip galvanized or porcelain enamel finished, shall be provided with corrosion-resistant finishes which shall withstand 120 hours of exposure to the salt spray test specified in ASTM B 1 17 without loss of paint or release of adhesion of the paint primer coat to the metal surface in excess of 1.6 mm (1/16 inch) from the test mark. The described test mark and test evaluation shall be in accordance with ASTM D 1654 with a rating of not less than 7 in accordance with TABLE 1, (procedure A). Cut edges or otherwise damaged surfaces of hot-dip galvanized sheet steel or mill galvanized sheet steel shall be coated with a zinc rich paint conforming to the manufacturer's standard.

2.4.2 Finishing

Painting required for surfaces not otherwise specified and finish painting of items only primed at the factory shall be as specified in Section 09900 PAINTS AND COATINGS.

2.5 CONDUCTORS, CONNECTORS, AND SPLICES

2.5.1 Aluminum-Composition Conductors

All-aluminum-conductors, AAC, shall be alloy 1350-H19 and comply with ASTM B 230/B 230M ASTM B 231/B 231M, DIN 48201, and BS 215. Aluminum-conductor-steel-reinforced, ACSR, shall comply with ASTM B 232/B 232M, DIN 48204, and BS 215..

2.5.2 Copper Conductors

Hard-drawn-copper conductors shall comply with ASTM B 1 and ASTM B 8 or DIN 48201 as appropriate for the conductor size.

2.5.3 Connectors and Splices

Connectors and splices shall be of copper alloys for copper conductors, aluminum alloys for aluminum-composition conductors, and a type designed to minimize galvanic corrosion for copper to aluminum-composition conductors. Aluminum-composition and aluminum-composition to copper shall comply with UL 486B, and copper-to-copper shall comply with UL 486A.

2.6 MEDIUM-VOLTAGE LINES

2.6.1 Bare Medium-Voltage Lines

Bare medium-voltage line conductors shall be aluminum-conductor-steel-reinforced, ACSR. Conductor types shall conform to DIN 48204 and shall not be mixed on any project, unless specifically indicated. Conductors larger than No. 2 AWG shall be stranded.

2.7 LOW-VOLTAGE LINES

Low-voltage line conductors shall be of Hard drawn Bare copper conductors except for service drop cables shall be of the neutral-supported secondary and service drop type with cross-linked thermosetting polyethylene (XLP) insulation in accordance with IEC 60228. Neutral-supported secondary and service drop conductors shall be insulated copper with bare hard-drawn-copper or copper-clad steel neutrals.

2.8 POLES AND HARDWARE

Poles shall be of lengths and classes and strengths indicated.

2.8.1 Steel Poles

Steel poles shall be designed to withstand the loads specified in IEEE C2 multiplied by the appropriate overload capacity factors or designed per ASCE 72, shall be hot-dip galvanized in accordance with ASTM A 123/A 123M and shall not be painted. Poles shall have tapered tubular members, either round in cross-section or polygonal, and comply with strength calculations performed by a registered professional engineer. Calculations shall be submitted in accordance with the detail drawings portion of paragraph SUBMITTALS. Pole shafts shall be one piece. Poles shall be welded construction with no bolts, rivets, or other means of fastening except as specifically approved. Pole markings shall be approximately 900 to 1800 mm above grade and shall include manufacturer, year of manufacture, top and bottom diameters, length, and a loading tree. Attachment requirements shall be provided as indicated, including grounding provisions. Climbing facilities are not required.

2.8.2 Pole Line Hardware

Zinc-coated hardware shall comply with ANSI C135.1, ANSI C135.2, ANSI C135.4, ANSI C135.14 ANSI C135.22. Steel hardware shall comply with ASTM A 575 and ASTM A 576. Hardware shall be hot-dip galvanized in accordance with ASTM A 153/A 153M. Pole-line hardware shall be hot-dip galvanized . Washers shall be installed as required. Washers used on through-bolts and double-arming bolts shall be approximately 57.2 mm square and 4.8 mm (3/16 inch) thick. The diameter of holes in washers shall be the correct standard size for the bolt on which a washer is used. Washers for use under heads of carriage-bolts shall be of the proper size to fit over

square shanks of bolts. Eye bolts, bolt eyes, eyenuts, strain-load plates, lag screws, guy clamps, fasteners, hooks, shims, and clevises shall be used wherever required to support and to protect poles, brackets, crossarms, guy wires, and insulators.

2.8.3 Armless Construction

Pole mounting brackets for line-post or pin insulators and eye bolts for suspension insulators shall be as shown. Brackets shall be attached to poles with a minimum of two bolts. Brackets may be either provided integrally as part of an insulator or attached to an insulator with a suitable stud. Bracket mounting surface shall be suitable for the shape of the pole. Pole top brackets shall conform to ANSI C135.22, except for modifications necessary to provide support for a line-post insulator. Brackets shall provide a strength exceeding that of the required insulator strength, but in no case less than a 12.5 kN (2800 pound) cantilever strength.

2.8.4 Guy Assemblies

Guy assemblies shall be aluminum-clad steel in accordance with ASTM B 416 or copper-clad steel in accordance with ASTM B 228. Guy assemblies, including insulators and attachments, shall provide a strength exceeding the required guy strength. Three-eye thimbles shall be provided on anchor rods to permit attachment of individual primary, secondary, and communication down guys. Anchors shall provide adequate strength to support all loads. Guy strand shall be 7 strand. Guy material shall be Class A zinc-coated-steel utilities grade 6mm (1/4 inch), with a minimum breaking strength of not less than 29.80 Kn, except where two or more guys are used 2.1 m (7 feet) 2.4 m (8 feet) in length by 19.1 mm (3/4 inch) in diameter.

2.9 INSULATORS

Insulators shall comply with NEMA HV 2, BS, or DIN for general requirements. Suspension insulators shall be used at corners, angles, dead-ends, other areas where line insulators do not provide adequate strength, and as indicated. Mechanical strength of suspension insulators and hardware shall exceed the rated breaking strength of the attached conductors.

2.9.1 Medium-Voltage Line Insulators

Medium-voltage line insulators shall comply with ANSI C29.2, ANSI C29.5, and ANSI C29.6 or IEC 61466, IEC 60120, and as applicable. Ratings shall not be lower than the ANSI classes indicated in TABLE I. Horizontal line-post insulators shall be used for armless construction and shall have the same mechanical and electrical ratings as vertical line-post insulators for the ANSI class indicated, but shall be modified to be suitable for horizontal installation. Where line-post insulators are used for angles greater than 15 degrees, clamp-top fittings shall be provided as well as for other locations shown. Conductor clamps for use with clamp-top, line-post insulators shall be hot-dip galvanized malleable iron for copper conductors and aluminum alloy for aluminum-composition conductors. Either line-post or pin insulators may be used for crossarm construction. Pin insulators for use on voltages in excess of 6 kV phase-to-phase shall be radio-interference-freed or else line-post insulators shall be used.

TABLE I

MINIMUM ANSI RATING OF MEDIUM-VOLTAGE INSULATORS BY CLASS

Voltage Level	Line-Post	Pin	Suspension
6 kV to 15 kV	57-1 or 11 57-2 or 12	55-5 56-3	Two 52-2 Two 52-3 or 4

2.9.2 Apparatus Insulators

Apparatus insulators shall comply with IEEE C57.19.00, IEEE C57.19.01, ANSI C29.8, and ANSI C29.9 or IEC 60120 and IEC 61466 as applicable.

2.10 CROSSARM ASSEMBLIES

2.10.1 Crossarms

Crossarms shall comply with RUS Bull 1728H-701 and shall be steel distribution type, except cross-sectional area with pressure treatment conforming to AWPA C25, and a 6.4 mm (1/4 inch), 45 degree chamfer on all top edges. Cross-sectional area minimum dimensions shall be 108.0 mm (4-1/4 inches) in height by 82.6 mm (3-1/4 inches) in depth in accordance with IEEE C2 for Grade B construction. Crossarms shall be 2.4 m (8 feet) in length, except that 3.1 m (10 foot) crossarms shall be used for crossarm-mounted banked single-phase or three-phase transformers or elsewhere as indicated. Crossarms shall be machined, chamfered, trimmed, and bored for stud and bolt holes before pressure treatment. Factory drilling shall be provided for pole and brace mounting, for four pin or four vertical line-post insulators, and for four suspension insulators, except where otherwise indicated or required. Drilling shall provide required climbing space and wire clearances. Crossarms shall be straight and free of twists to within 2.5 mm per 304.8 mm (1/10 inch per foot) of length. Bend or twist shall be in one direction only.

2.11 FUSES AND SWITCHES, MEDIUM-VOLTAGE

2.11.1 Fuse Cutouts

Medium-voltage fuses and cutouts shall comply with NEMA SG 2 or IEC 282-1 and shall be of the loadbreak type construction rated 15 kV and of the heavy-duty type. Open-link cut-outs are not acceptable. Fuses shall be either indicating or dropout type. Fuse ratings shall be as indicated. Fuse cutouts shall be equipped with mounting brackets suitable for the indicated installations.

2.11.2 Fused Switches

Fused switches shall be single-pole, manual devices with integral power fuses of the dropout type. Fuse ratings shall be as indicated. Each switch shall have a continuous current rating of 400 amperes rms , a momentary asymmetrical current rating of 40 kA rms and shall be rated for the voltage of the system in which it is installed.

2.11.3 Nonfused Switches

Nonfused switches shall be single-pole, manual devices with a continuous current rating of 400 amperes rms , a momentary asymmetrical current rating of 40 kA rms , and shall be rated for the voltage of the system in which it is installed.

2.11.4 Group-Operated Load Interrupter Switches

2.11.4.1 Manually Operated Type (Switch Handle Operated)

Manually operated (switch handle operated) load interrupter switches shall comply with ANSI C37.32 and shall be of the outdoor, manually-operated, three-pole, single-throw type with either tilting or rotating insulators. Switches shall be equipped with interrupters capable of interrupting currents equal to the switch's continuous current rating. Each switch shall be preassembled for the indicated configuration and mounting. Moving contacts shall be of the high-pressure, limited-area type, designed to ensure continuous surface contact. Switches shall be fused or non-fused as indicated. Switches shall be complete with necessary operating mechanisms, handles, and other items required for manual operation from the ground. Switch operating handles shall be located approximately 1.1 meters above final grade. Insulation of switch operating mechanisms shall include both insulated interphase rod sections and insulated vertical shafts. Each handle shall be provided with a padlock arranged to lock the switch in both the open and the closed position.

2.11.5 Group Operated Load Interrupter Switches

2.11.5.1 Pole-Mounted Sectionalizing Switches

Pole-mounted sectionalizing switches shall comply with IEEE C37.63. Sectionalizers shall be coordinated with source side recloser as shown. Ratings at 50 Hz shall be:

Nominal voltage ..... 15 kV
Rated Maximum voltage..... 15 kV
Rated continuous current..... 1200 AMP
Three second short-time current-carrying capacity.... 40 kA
BIL..... 95 kV

2.12 TRANSFORMERS

Transformers shall comply with IEEE C57.12.00 or IEC 60076, IEC 60726 for general requirments and ANSI C57.12.20 for specific requirements for overhead transformers. Overhead distribution transformers shall be of the outdoor type,mineral-oil-insulated, single-phase or three-phase as indicated and have two separate windings per phase. Transformers shall be provided with necessary auxiliary mounting devices suitable for the indicated installation. Transformers shall have two 2-1/2 percent rated KVA high-voltage taps above and below rated primary voltage. Transformer installations shall include one primary fuse cutout and one surge arrester for each ungrounded phase conductor. Self-protected transformers are not acceptable. Transformer tanks shall have a standard gray finish.

2.13 SURGE ARRESTERS

Surge arresters shall comply with NEMA LA 1 and IEEE C62.1, ANSI C62.2, and IEEE C62.11, and shall be provided for protection of aerial-to-underground

transitions, automatic circuit reclosers, group-operated load-interrupter switches, transformers and other indicated equipment. Arresters shall be distribution class, 9 Kv rated. Arresters shall be equipped with mounting brackets suitable for the indicated installations. Arresters shall be of the metal-oxide varistor type suitable for outdoor installations.

2.14 GROUNDING AND BONDING

2.14.1 Driven Ground Rods

Ground rods shall be of copper-clad steel conforming to UL 467, BS 7430, BS 6651 or IEC 61230 not less than 20 mm (3/4 inch) in diameter by 3.0 meter (10 feet) in length of the sectional type driven full length into the earth.

2.14.2 Grounding Conductors

Grounding conductors shall be bare, except where installed in conduit with associated phase conductors. Insulated conductors shall be of the same material as the phase conductors and green color-coded, except that conductors shall be rated no more than 600 volts. Bare conductors shall be ASTM B 8 soft-drawn unless otherwise indicated. Aluminum is not acceptable.

2.15 PADLOCKS

Padlocks shall comply with Section 08710 DOOR HARDWARE.

2.16 WARNING SIGNS

Warning signs shall be porcelain enameled steel or approved equal. Voltage warning signs shall comply with IEEE C2.

2.17 LIQUID DIELECTRICS

Liquid dielectrics for transformers, reclosers, and other liquid-filled electrical equipment shall be non-polychlorinated biphenyl (PCB) mineral-oil or less-flammable liquid as specified. Nonflammable fluids shall not be used. Tetrachloroethylene (perchloroethylene) and 1, 2, 4 tetrachlorobenzene fluids shall not be used. Liquid dielectrics in retrofitted equipment shall be certified by the manufacturer as having less than 50 parts-per-million (ppm) PCB content. In lieu of the manufacturer's certification, the Contractor may submit a test sample of the dielectric in accordance with ASTM D 923 and have tests performed per ASTM D 4059 at a testing facility approved by the Contracting Officer. Equipment with test results indicating PCB level exceeding 50 ppm shall be replaced.

2.18 FACTORY TESTS

Factory tests shall be performed, as follows, in accordance with the applicable publications and with other requirements of these specifications. The Contracting Officer shall be notified at least 10 days before the equipment is ready for testing.

a. Transformers: Manufacturer's standard routine tests in accordance with IEEE C57.12.00.

b. Transformers rated 200 kVA and above: Reduced full-wave, chopped-wave, and full-wave impulse test on each line and neutral terminal, in accordance with IEEE C57.98.

c. High-Voltage Air Switches: Manufacturer's standard tests in accordance with IEEE C37.34 and IEEE C37.41.

d. Instrument Current Transformers: Manufacturer's standard tests in accordance with IEEE C57.13.2.

e. High-Voltage Fuses: Manufacturer's standard tests in accordance with IEEE C37.41.

f. Electric Power Insulators: Manufacturer's standard tests in accordance with ANSI C29.1.

2.19 COORDINATED POWER SYSTEM PROTECTION

Analyses shall be prepared to demonstrate that the equipment selected and system constructed meet the contract requirements for equipment ratings, coordination, and protection. They shall include a load flow analysis, a fault current analysis, and a protective device coordination study. The studies shall be performed by a registered professional engineer with demonstrated experience in power system coordination in the last three years. The Contractor shall provide list of references complete with points of contact, address and telephone numbers. The selection of the engineer is subject to the approval of the Contracting Office

2.19.1 Scope of Analyses

The fault current analysis, and protective device coordination study shall begin at: the source bus and extend down to system buses where fault availability is 10,000 amperes (symmetrical) for building/facility 600 volt level distribution buses.

2.19.2 Determination of Facts

The time-current characteristics, features, and nameplate data for each existing protective deice shall be determined and documented. The Contractor shall coordinate with the power company for fault current availability at the site.

2.19.3 Single Line Diagram

A single line diagram shall be prepared to show the electrical system buses, devices, transformer points, and all sources of fault current (including generator and motor contributions). A fault-impedance diagram or a computer analysis diagram may be provided. Each bus, device or transformer point shall have a unique identifier. If a fault-impedance diagram is provided, impedance data shall be shown. Locations of switches, breakers, and circuit interrupting devices shall be shown on the diagram together with available fault data, and the device interrupting rating.

2.19.4 Fault Current Analysis

The fault current analysis shall be performed in accordance with methods described in IEEE Std 242 and IEEE Std 399. Actual data shall be utilized in fault calculations. Bus characteristics and transformer impedances shall be those proposed. Data shall be documented in the report.

2.19.5 Fault Current Availability

Balanced three-phased fault, bolted line-to-line fault, and line-to-ground fault current values shall be provided at each voltage transformation point and at each power distribution bus. The maximum and minimum values of fault available at each location shall be shown in tabular form on the diagram or in the report.

2.19.6 Coordination Study

The study shall demonstrate that the maximum possible degree of selectively has been obtained between devices specified, consistent with protection of equipment and conductors from damage from overloads and fault conditions. The study shall include a description of the coordination of the protective devices in this project. Provide a written narrative that describes: which devices may operate in the event of a fault at each bus; the logic used to arrive at device ratings and settings; situations where system coordination is not achievable due to device limitations (an analysis of any device curves which overlap); coordination between upstream and downstream devices; and relay settings. Recommendations to improve or enhance system reliability, and detail where such changes would involve additions or modifications to the contract and cost changes (addition or reduction) shall be provided. Composite coordination plots shall be provided on log-log graph pape

2.19.7 Study Report

a. The report shall include a narrative describing: the analyses performed; the bases and methods used; and the desired method of coordinated protection of the power system.

b. The study shall include descriptive and technical data for existing devices and new protective devices proposed. The data shall include manufacturers published data, nameplate data, and definition of the fixed or adjustable features of the existing or new protective devices.

c. The report shall document utility company data including system voltages, fault MVA, system X/R ratio, time-current characteristics curves, current transformer ratios, and relay device numbers and settings.

d. The report shall contain fully coordinated composite time-current characteristic curves for each bus in the system, as required to ensure coordinated power system between protective devices or equipment. The report shall include recommended ratings and settings of all protective devices in tabulated form.

e. The report shall provide the calculation performed for the analyses, including computer analysis programs utilized. The name of the software package, developer, and version number shall be provided.

PART 3 EXECUTION

3.1 GENERAL INSTALLATION REQUIREMENTS

Equipment and devices shall be installed and energized in accordance with

the manufacturer's published instructions. Circuits installed in conduits or underground and splices and terminations for medium-voltage cable shall conform to the requirements of Section 16375 ELECTRICAL DISTRIBUTION SYSTEM, UNDERGROUND. Secondary circuits installed in conduit on poles shall conform to the requirements of Section 16415 ELECTRICAL WORK, INTERIOR.

3.1.1 Conformance to Codes

The installation shall comply with the requirements and recommendations of IEEE C2 for heavy loading districts, Grade B construction. No reduction in clearance shall be made. The installation shall also comply with the applicable parts of NFPA 70.

3.1.2 Verification of Dimensions

The Contractor shall become familiar with details of the work, shall verify dimensions in the field, and shall notify the Contracting Officer of any discrepancy before performing any work..

3.1.3 Tree Trimming

Where lines pass through trees, trees shall be trimmed at least 4.5 m clear on both sides horizontally and below for medium-voltage lines, and 1.5 m clear on both sides horizontally and below for other lines, and no branch shall overhang horizontal clearances. Where trees are indicated to be removed to provide a clear right-of-way, clearing is specified in Section 02231 CLEARING AND GRUBBING.

3.1.4 Disposal of Liquid Dielectrics

PCB-contaminated dielectric shall be marked as PCB and transported to and incinerated by an approved EPA waste disposal facility. The Contractor shall furnish certification of proper disposal. Contaminated dielectric shall not be diluted to lower the level of contamination.

3.2 POLE INSTALLATION

Joint-use electric/roadway-lighting poles for overhead electric and communication lines shall be steel poles utilizing crossarm construction. Cross-arm mounted banked single-phase transformer installations shall be provided. Crossarm construction shall be provided for support of other equipment, except where direct-pole mounting is indicated. Pole equipment mounts shall be used for steel poles rather than crossarm equipment mounts. Detail drawings shall be submitted for approval. Provision for communication services is required on pole-line construction, except where specifically noted otherwise. A vertical pole space of not less than 600 mm (2 feet) shall be reserved at indicated locations.

3.2.1 Steel Pole Setting

Poles shall be mounted on cast-in-place or power-installed screw foundations.

3.2.1.1 Cast-In-Place Foundations

Concrete foundations, sized as indicated, shall have anchor bolts accurately set in foundations using templates supplied by the pole manufacturer. Concrete work and grouting is specified in Section 03300 CAST-IN-PLACE STRUCTURAL CONCRETE. After the concrete has cured, pole

anchor bases shall be set on foundations and leveled by shimming between anchor bases and foundations or by setting anchor bases on leveling nuts and grouting. Poles shall be set plumb. Anchor bolts shall be the manufacturer's standard, and not less than necessary to meet the pole wind loading specified herein and other design requirements.

3.2.1.2 Power-Installed Screw Foundations

Power-installed screw foundations may be used if they have the required strength, mounting-bolt, and top plate dimensions. Screw foundations shall be of at least 6.4 mm (1/4 inch) thick structural steel conforming to ASTM A 36/A 36M and hot-dip galvanized in accordance with ASTM A 123/A 123M. Conduit slots in screw foundation shafts and top plates shall be marked to indicate orientation. Design calculations indicating adequate strength shall be approved before installation of screw foundation is permitted. Calculations shall be submitted in accordance with the detail drawings portion of paragraph SUBMITTALS.

3.3 CROSSARM MOUNTING

Crossarms shall be bolted to poles with 15.9 mm (5/8 inch) through-bolts with square washers at each end. Bolts shall extend not less than 3 mm nor more than 50 mm beyond nuts. On single crossarm construction, the bolt head shall be installed on the crossarm side of the pole. Metal crossarm braces shall be provided on crossarms. Flat braces may be provided for 2.4 m (8 foot) crossarms and shall be 6.4 by 31.8 mm (1/4 by 1-1/4 inches), not less than 700 mm (28 inches) in length. Flat braces shall be bolted to arms with 9.5 mm (3/8 inch) carriage bolts with round or square washers between boltheads and crossarms, and secured to poles with 50.8 by 101.6 mm (1/2 by 4 inch) lag screws after crossarms are leveled and aligned. Angle braces are required for 3.1 m (10 foot) crossarms and shall be 1.5 m (60 inch) span by 457.2 mm (18 inch) drop formed in one piece from 38.1 by 38.1 by 4.8 mm (1-1/2 by 1-1/2 by 3/16 inch) angle. Angle braces shall be bolted to crossarms with 50.8 mm (1/2 inch) bolts with round or square washers between boltheads and crossarms, and secured to poles with 15.9 mm (5/8 inch) through-bolts. Double crossarms shall be securely held in position by means of 15.9 mm (5/8 inch) double-arming bolts. Each double-arming bolt shall be equipped with four nuts and four square washers.

3.3.1 Line Arms and Buck Arms

Line arms and buck arms shall be set at right angles to lines for straight runs and for angles 45 degrees and greater; and line arms shall bisect angles of turns of less than 45 degrees. Dead-end assemblies shall be used for turns where shown. Buckarms shall be installed, as shown, at corners and junction poles. Double crossarms shall be provided at ends of joint use or conflict sections, at dead-ends, and at angles and corners to provide adequate vertical and longitudinal strength. Double crossarms shall be provided at each line-crossing structure and where lines not attached to the same pole cross each other.

3.3.2 Equipment Arms

Equipment arms shall be set parallel or at right angles to lines as required to provide climbing space. Equipment arms shall be located below line construction to provide necessary wire and equipment clearances.

3.4 GUY INSTALLATION

Guys shall be provided where conductor tensions are not balanced, such as at angles, corners, and dead-ends. Where a single guy will not provide the required strength, two or more guys shall be provided. Where guys are wrapped around poles, at least two guy hooks shall be provided and pole shims shall be provided where guy tension exceeds 27 kN (6000 pounds). Guy clamps 152.4 mm (6 inches) in length with three 15.9 mm (5/8 inch) bolts, or offset-type guy clamps, or approved guy grips shall be provided at each guy terminal. Multiple-helix screw anchors shall be provided in marshy ground; rock anchors shall be installed in rock at right angles to guys, elsewhere anchors shall be of an expanding type, except that power installed screw anchors of equivalent holding power are acceptable. A half-round yellow polyvinyl, fiberglass, or other suitable plastic guy marker, not less than 2.4 m (8 feet) in length, shall be provided at the anchor end of each guy shown, securely clamped to the guy or anchor at the bottom and top of the marker. Holding capacities for down guys shall be based on a lead angle of 45 degrees.

3.5 CONDUCTOR INSTALLATION

3.5.1 Line Conductors

Unless otherwise indicated, conductors shall be installed in accordance with manufacturer's approved tables of sags and tensions. Proper care shall be taken in handling and stringing conductors to avoid abrasions, sharp bends, cuts, kinks, or any possibility of damage to insulation or conductors. Conductors shall be paid out with the free end of conductors fixed and cable reels portable, except where terrain or obstructions make this method unfeasible. Bend radius for any insulated conductor shall not be less than the applicable NEMA specification recommendation. Conductors shall not be drawn over rough or rocky ground, nor around sharp bends. When installed by machine power, conductors shall be drawn from a mounted reel through stringing sheaves in straight lines clear of obstructions. Initial sag and tension shall be checked by the Contractor, in accordance with the manufacturer's approved sag and tension charts, within an elapsed time after installation as recommended by the manufacturer.

3.5.2 Connectors and Splicess

Connectors and splices shall be mechanically and electrically secure under tension and shall be of the nonbolted compression type. The tensile strength of any splice shall be not less than the rated breaking strength of the conductor. Splice materials, sleeves, fittings, and connectors shall be noncorrosive and shall not adversely affect conductors. Aluminum-composition conductors shall be wire brushed and an oxide inhibitor applied before making a compression connection. Connectors which are factory-filled with an inhibitor are acceptable. Inhibitors and compression tools shall be of types recommended by the connector manufacturer. Primary line apparatus taps shall be by means of hot line clamps attached to compression type bail clamps (stirrups). Low-voltage connectors for copper conductors shall be of the solderless pressure type. Noninsulated connectors shall be smoothly taped to provide a waterproofinsulation equivalent to the original insulation, when installed on insulated conductors. On overhead connections of aluminum and copper, the aluminum shall be installed above the copper.

3.5.3 Conductor-To-Insulator Attachments

Conductors shall be attached to insulators by means of clamps, shoes or tie wires, in accordance with the type of insulator. For insulators requiring conductor tie-wire attachments, tie-wire sizes shall be as indicated in TABLE II.

TABLE II

TIE-WIRE REQUIREMENTS

CONDUCTOR Copper (AWG)	TIE WIRE Soft-Drawn Copper (AWG)
6	8
4 and 2	6
1 through 3/0	4
4/0 and larger	2
AAC, AAAC, or ACSR (AWG)	AAAC OR AAC (AWG)
Any size	6 or 4

3.5.4 Armor Rods

Armor rods shall be provided for AAC, AAAC, and ACSR conductors. Armor rods shall be installed at supports, except armor rods will not be required at primary dead-end assemblies if aluminum or aluminum-lined zinc-coated steel clamps are used. Lengths and methods of fastening armor rods shall be in accordance with the manufacturer's recommendations. For span lengths of less than 61 m, flat aluminum armor rods may be used. Flat armor rods, not less than 762.0 micrometers by 6.4 mm (0.03 by 0.25 inch) shall be used on No. 1 AWG AAC and AAAC and smaller conductors and on No. 5 AWG ACSR and smaller conductors. On larger sizes, flat armor rods shall be not less than 1.3 by 7.6 mm (0.05 by 0.30 inches). For span lengths of 61 m or more, preformed round armor rods shall be used.

3.5.5 Medium-Voltage Insulated Cables

Medium-voltage cable messengers shall be attached to poles with clamps providing a strength exceeding the required messenger strength and with not less than 15.9 mm (5/8 inch) through-bolts. Messengers shall be dead-ended, grounded, and line-guyed at corners and dead-ends, and at intervals not exceeding 305 m along straight runs.

3.6 TRANSFORMER INSTALLATION

Transformers shall be carefully installed so as not to scratch finishes or damage bushings. Transformers shall be installed in accordance with the manufacturer's instructions. After installation, surfaces shall be inspected and scratches shall be touched up with a finish provided by the transformer manufacturer for this purpose.

3.7 CONNECTIONS TO UTILITY LINES

The Contractor shall coordinate the work with the Contracting Officer and shall provide for final connections to the utility electric lines.

3.8 CONNECTIONS BETWEEN AERIAL AND UNDERGROUND SYSTEMS

Connections between aerial and underground systems shall be made as shown. Underground cables shall be extended up poles in conduit to cable terminations. Conduits shall be secured to poles by two-hole galvanized steel pipe straps spaced not more than 3 m apart and with one support not more than 300 mm from any bend or termination. Cables shall be supported by devices separate from the conduit or guard, near their point of exit from the riser conduit or guard. Cables guards shall be secured in accordance with the manufacturers published procedure. Risers shall be equipped with bushings to protect cables. Capnut potheads shall be used to terminate medium-voltage multiple-conductor cable.

3.9 CONNECTIONS TO BUILDINGS

3.9.1 Aerial Services

Connections to buildings shall be made at approximately the point indicated and shall be connected to the service entrance conductors. Supports at buildings shall be adequate to withstand required pulls; supports shall not be rated less than 4450 N (1000 pounds). Drip loops shall be formed on conductors at entrances to buildings, cabinets, or conduits. Service-entrance conduits with termination fittings and conductors within the building, including sufficient slack for connection to aerial service cables, shall conform to the requirements of Section 16402 Interior distribution system.

3.10 GROUNDING

Noncurrent-carrying metal parts of equipment and conductor assemblies, such as luminaires, medium-voltage cable terminations and messengers, metal poles, operating mechanisms of pole top switches, panel enclosures, transformers, capacitors, recloser frames (cases) and other noncurrent-carrying metal items shall be grounded. Additional grounding of equipment, neutral, and surge arrester grounding systems shall be installed at poles where indicated.

3.10.1 Grounding Electrodes

Grounding electrodes shall be installed as follows:

a. Driven rod electrodes - Unless otherwise indicated, ground rods shall be located approximately 900 mm out from base of the pole and shall be driven into the earth until the tops of the rods are approximately 300 mm below finished grade. Multiple rods shall be evenly spaced at least 3 m apart and connected together 600 mm below grade with a minimum No. 6 bare copper conductor.

b. Pole butt electrodes - Pole butt electrodes shall not be the sole grounding electrode at transformer locations. The pole butt electrode shall consist of a coil of at least 4 m of minimum No. 6 bare copper conductor stapled to the butt of the pole.

c. Plate electrodes - Plate electrodes shall be installed in accordance with the IEEE C2 and NFPA 70.

d. Ground Resistance - The maximum resistance of a driven ground rod shall not exceed 10 ohms under normally dry conditions. Whenever the required ground resistance is not met, provide additional

electrodes interconnected with grounding conductors, to achieve the specified ground resistance. The additional electrodes will be up to three, 2.4 m (8 feet) rods spaced a minimum of 3 m (10 feet) apart . In high ground resistance, UL listed chemically charged ground rods may be used. If the resultant resistance exceeds 25 ohms measured not less than 48 hours after rainfall, the Contracting Officer shall be notifies immediately. Connections below grade shall be fusion welded. Connections above grade shall be fusion welded or shall use UL 467 approved connectors.

3.10.2 Grounding and Bonding Connections

Connections above grade shall be made by the fusion-welding process or with bolted solderless connectors in compliance with UL 467, and those below grade shall be made by a fusion-welding process. Where grounding conductors are connected to aluminum-composition conductors, specially treated or lined copper-to-aluminum connectors suitable for this purpose shall be used.

3.10.3 Grounding Electrode Conductors

On multi-grounded circuits, as defined in IEEE C2, provide a single continuous vertical grounding electrode conductor. Neutrals, surge arresters, and equipment grounding conductors shall be bonded to this conductor. For single grounded or ungrounded systems, provide a grounding conductor for the surge arrester and equipment grounding conductors and a separate grounding conductor for the secondary neutrals. Grounding electrode conductors shall be sized as shown. Secondary system neutral conductors shall be connected directly to the transformer neutral bushings, then connected with a neutral bonding jumper between the transformer neutral bushing and the vertical grounding electrode conductor, as shown. On metal poles, a preformed galvanized steel strap, 15.9 mm (5/8 inch) wide by 0.853 (22 gauge) minimum by length, secured by a preformed locking method standard with the manufacturer, shall be used to support a grounding electrode conductor installation on the pole and spaced at intervals not exceeding 1.5 m with one band not more than 75 mm from each end of the vertical grounding electrode conductor. Bends greater than 45 degrees in grounding electrode conductor are not permitted.

3.11 FIELD TESTING

3.11.1 General

Field testing shall be performed in the presence of the Contracting Officer. The Contractor shall notify the Contracting Officer 10 days prior to conducting tests. The Contractor shall furnish materials, labor, and equipment necessary to conduct field tests. The Contractor shall perform tests and inspections recommended by the manufacturer unless specifically waived by the Contracting Officer. The Contractor shall maintain a written record of tests which includes date, test performed, personnel involved, devices tested, serial number and name of test equipment, and test results. Field reports will be signed and dated by the Contractor.

3.11.2 Safety

The Contractor shall provide and use safety devices such as rubber gloves, protective barriers, and danger signs to protect and warn personnel in the test vicinity. The Contractor shall replace any devices or equipment which are damaged due to improper test procedures or handling.

3.11.3 Ground-Resistance Tests

The resistance of each grounding electrode system shall be measured using the fall-of-potential method defined in IEEE Std 81. Ground resistance measurements shall be made before the electrical distribution system is energized and shall be made in normally dry conditions not less than 48 hours after the last rainfall. Resistance measurements of separate grounding electrode systems shall be made before the systems are bonded together below grade. The combined resistance of separate systems may be used to meet the required resistance, but the specified number of electrodes shall be provided.

3.11.4 Medium-Voltage Preassembled Cable Test

After installation, prior to connection to an existing system, and before the operating test, the medium-voltage preassembled cable system shall be given a high potential test. Direct-current voltage shall be applied on each phase conductor of the system by connecting conductors at one terminal and connecting grounds or metallic shieldings or sheaths of the cable at the other terminal for each test. Prior to the test, the cables shall be isolated by opening applicable protective devices and disconnecting equipment. The method, voltage, length of time, and other characteristics of the test for initial installation shall be in accordance with NEMA WC 74 for the particular type of cable installed, and shall not exceed the recommendations of IEEE Std 404 for cable joints unless the cable and accessory manufacturers indicate higher voltages are acceptable for testing. Should any cable fail due to a weakness of conductor insulation or due to defects or injuries incidental to the installation or because of improper installation of cable, cable joints, terminations, or other connections, the Contractor shall make necessary repairs or replace cables as directed. Repaired or replaced cables shall be retested.

3.11.5 Sag and Tension Test

The Contracting Officer shall be given prior notice of the time schedule for stringing conductors or cables serving overhead medium-voltage circuits and reserves the right to witness the procedures used for ascertaining that initial stringing sags and tensions are in compliance with requirements for the applicable loading district and cable weight.

3.11.6 Low-Voltage Cable Test

For underground secondary or service laterals from overhead lines, the low-voltage cable, complete with splices, shall be tested for insulation resistance after the cables are installed, in their final configuration, ready for connection to the equipment, and prior to energization. The test voltage shall be 500 volts dc, applied for one minute between each conductor and ground and between all possible combinations of conductors in the same trench, duct, or cable, with other conductors in the same trench, duct, or conduit. The minimum value of insulation shall be:

R in megohms = (rated voltage in kV + 1) x 304,800/(length of cable in meters)

Each cable failing this test shall be repaired or replaced. The repaired cable shall then be retested until failures have been eliminated.

3.11.7 Liquid-Filled Transformer Tests

The following field tests shall be performed on liquid-filled transformers 750 kVA and above. Pass-fail criteria shall be in accordance with the transformer manufacturer's specifications.

a. a. Insulation resistance test phase-to-ground.

b. Turns ratio test.

c. Correct phase sequence.

3.11.8 Pre-Energization Services

The following services shall be performed on the equipment listed below. These services shall be performed subsequent to testing but prior to the initial energization. The equipment shall be inspected to insure that installation is in compliance with the recommendations of the manufacturer and as shown on the detail drawings. Terminations of conductors at major equipment shall be inspected to ensure the adequacy of connections. Bare and insulated conductors between such terminations shall be inspected to detect possible damage during installation. If factory tests were not performed on completed assemblies, tests shall be performed after the installation of completed assemblies. Components shall be inspected for damage caused during installation or shipment and to ensure that packaging materials have been removed. Components capable of being both manually and electrically operated shall be operated manually prior to the first electrical operation. Components capable of being calibrated, adjusted, and tested shall be calibrated, adjusted, and tested in accordance with the instructions of the equipment manufacturer. Items for which such services shall be provided, but are not limited to, are the following:

Automatic circuit reclosers.

Switches.

Transformers.

3.11.9 Operating Tests

After the installation is completed, and at such time as the Contracting Officer may direct, the Contractor shall conduct operating tests for approval. The equipment shall be demonstrated to operate in accordance with the specified requirements. An operating test report shall be submitted in accordance with paragraph SUBMITTALS.

3.12 MANUFACTURER'S FIELD SERVICE

3.12.1 Onsite Training

The Contractor shall conduct a training course for the operating staff as designated by the Contracting Officer. The training period shall consist of a total of 16 hours of normal working time and shall start after the system is functionally completed but prior to final acceptance tests. The course instruction shall cover pertinent points involved in operating, starting, stopping, servicing the equipment, as well as all major elements of the operation and maintenance manuals. Additionally, the course instructions shall demonstrate all routine maintenance operations. A VHS format video

tape of the entire training session shall be submitted.

3.12.2 Installation Engineer

After delivery of the equipment, the Contractor shall furnish one or more field engineers, regularly employed by the equipment manufacturer to supervise the installation of the equipment, assist in the performance of the onsite tests, initial operation, and instruct personnel as to the operational and maintenance features of the equipment.

3.13 ACCEPTANCE

Final acceptance of the facility will not be given until the Contractor has successfully completed all tests and after all defects in installation, material or operation have been corrected.

-- End of Section --

SECTION 16375

ELECTRICAL DISTRIBUTION SYSTEM, UNDERGROUND

PART 1 GENERAL

1.1 REFERENCES

The publications listed below form a part of this specification to the extent referenced. The publications are referred to in the text by basic designation only.

Unless noted otherwise, all material used shall be in compliance with the requirements of the applicable German (DIN) Standards. In the event DIN Standard material is unavailable, contractor may then select comparable British Standard (BS), or Underwriters Laboratories Inc. (UL) listed material. Equipment enclosure types shall be in compliance with the National Electrical Manufacturer's Association (NEMA) or the International Electro-Technical Committee (IEC) standards. Material and equipment installed under this contract shall be for the appropriate application.

AMERICAN ASSOCIATION OF STATE HIGHWAY AND TRANSPORTATION OFFICIALS (AASHTO)

AASHTO HB-17	Highway Bridges-Division I-Section 14: Bearings

AMERICAN NATIONAL STANDARDS INSTITUTE (ANSI)

ANSI C80.1	(1995) Rigid Steel Conduit - Zinc Coated
ANSI C 80.6	(1994) Intermediate Metal Conduit - Zinc Coated (IMC)

ASTM INTERNATIONAL (ASTM)

ASTM A 123/A 123M	(2001) Zinc (Hot-Dip Galvanized) Coatings on Iron and Steel Products
ASTM A 153/A 153M	(2001) Zinc Coating (Hot-Dip) on Iron and Steel Hardware
ASTM C 478	(1997) Precast Reinforced Concrete Manhole Sections
ASTM C 478M	(1997) Precast Reinforced Concrete Manhole Sections (Metric)

BRITISH STANDARDS INSTITUTION (BSI)

BS 14396	(2004) Fixed ladders for manholes.
BS 31	(1940: Amd 5) Steel Conduit and Fittings for Electrical Wiring
BS 4568	(1970) Specification for steel conduit and

	fittings with metric threads of ISO form for electrical installations. Steel conduit, bends and couplers
BS 4607: Part 5	(1984) Non-metallic conduit fittings for electrical installations; Part 5. Rigid conduit, fittings and components of insulating material
BS 6651	(1999) Code Of Practice For Protection Of Structures Against Lightning
BS 7430	(1998) Code of Practice for Earthing
BS 7671	(1992) Requirements for Electrical Installations
BS 7888	(1998) LV and MV accessories for power cables with rated voltage from 0.6/1 kV up to and including 20.8/36 kV. General

DUETSCHES INSTITUTE FUR NORMUNG (DIN)

DIN EN 14396	(2004) Fixed ladders for manholes; German version.
DIN 40430	(1971) Steel Conduit Thread; Dimensions
DIN 49005	(1956) Conduit for electrical wiring; bushing nipples for steel armoured conduits
DIN 49020	(1959) Conduit for Electrical Wiring; Screwed Steel Conduit, Plain Conduit, Couplers
DIN VDE 0278-623/A1	(2004) Power cable accessories with rated voltages up to 30kV - Part 623: Specification for joints, stop ends and outdoor terminations for distribution cables of rated voltage 0.6/1.0 kV.
DIN EN 61537	(2001) Cable tray systems and cable ladder system for cable management; German version.

INTERNATIONAL ELECTROTECHNICAL COMMISSION (IEC)

IEC 60502	(1998) Power cables with extruded insulation and their accessories for rated voltages from 1 kV
IEC 60702	(2002) Mineral insulated cables and their terminations with a rated voltage not exceeding 750 V - Part 1: Cables
IEC 61035	(1990) Specification for conduit fittings for electrical installations
IEC 61386	(1996) Conduit systems for electrical

	installations
IEC 61537	(2001) Cable tray systems and cable ladder system for cable management.

INSTITUTE OF ELECTRICAL AND ELECTRONICS ENGINEERS (IEEE)

IEEE C2	(2002) National Electrical Safety Code
IEEE Std 100	(1997) IEEE Standard Dictionary of Electrical and Electronics Terms
IEEE Std 386	(1995) Separable Insulated Connector Systems for Power Distribution Systems Above 600V
IEEE Std 404	(1993) Cable Joints for Use with Extruded Dielectric Cable Rated 5000 V Through 138 000 V and Cable Joints for Use with Laminated Dielectric Cable Rated 2500 V Through 500 000 V
IEEE Std 48	(1998) Standard Test Procedures and Requirements for Alternating-Current Cable Terminations 2.5 kV through 765 kV
IEEE Std 592	(1990; R 1996) Exposed Semiconducting Shields on Premolded High Voltage Cable Joints and Separable Insulated Connectors

NATIONAL ELECTRICAL MANUFACTURERS ASSOCIATION (NEMA)

NEMA FB 1	(1993) Fittings, Cast Metal Boxes, and Conduit Bodies for Conduit and Cable Assemblies
NEMA TC 6	(1990) PVC and ABS Plastic Utilities Duct for Underground Installation
NEMA WC 70	(1999) Non-Shielded Power Cable 2000 V or Less

NATIONAL FIRE PROTECTION ASSOCIATION (NFPA)

NFPA 70	(2005) National Electrical Code

UNDERWRITERS LABORATORIES (UL)

UL 1242	(1996; Rev Mar 1998) Intermediate Metal Conduit
UL 467	(1993; R 2001) Grounding and Bonding Equipment
UL 514A	(1996; Rev Dec 1999) Metallic Outlet Boxes
UL 6	(1997) Rigid Metal Conduit

1.2 GENERAL REQUIREMENTS

1.2.1 Terminology

Terminology used in this specification is as defined in IEEE Std 100.

1.2.2 Service Conditions

Items provided under this section shall be specifically suitable for the following service conditions. Seismic details shall conform to Section 16070 SEISMIC PROTECTION FOR ELECTRICAL EQUIPMENT.

a. Fungus Control: None

b. Altitude: 878 m

c. Ambient Temperature - 5.5 to + 44.4 degrees C

d. Frequency: 50 Hz

e. Corrosive Areas: None

1.3 SUBMITTALS

Government approval is required for submittals with a "G" designation; submittals not having a "G" designation are for information only. When used, a designation following the "G" designation identifies the office that will review the submittal for the Government. The following shall be submitted in accordance with Section 01330 SUBMITTAL PROCEDURES:

SD-03 Product Data

Catalogcuts, product data or printed information in sufficient detail to vertify compliance with the requirements of the contract documents.

PART 2 PRODUCTS

2.1 CORROSION PROTECTION

2.1.1 Aluminum Materials

Aluminum shall not be used.

2.1.2 Ferrous Metal Materials

2.1.2.1 Hardware

Ferrous metal hardware shall be hot-dip galvanized in accordance with ASTM A 153/A 153M and ASTM A 123/A 123M.

2.2 CABLES

Cables shall be single or multi-conductor type.

Cables shall meet applicable requirements of NFPA 70 for type of insulation, jacket, and conductor specified or indicated. Cables manufactured more than 12 months prior to date of delivery to site shall not be used. All cables shall be funished in accordance with the

requirements below, and shall conform to the detailed requirments specified herein.

Basis of Design: El Sewedy Cables, General Cable, or HES Kablo.

2.2.1 Low Voltage Cables

Cables shall be rated 600 volts and shall confirm to the requirements of NFPA 70, Cable shall be Cu conductor Multicore cable and shall have an overall outer PVC Jacket. Whenever cables shall be exposed and subjected to sun ,it has to be insulated by ultraviolet insulation.

2.2.2 Medium-Voltage Cables (15KV)

2.2.2.1 Single and Multicore Copper Conductors

Stranded circular compacted copper conductor, semi conducting layer as conductor screen, XLPE insulated, semi conducting layer as nonmetallic insulatin screen, three cores assembled together with non-hygroscopic ply propylene fillers, wrappers with polyester tape and PVC sheathed. All cables should be manufacturered as per IEC 60502.

2.3 CABLE JOINTS, TERMINATIONS, AND CONNECTORS

Basis of Design: IPP or Elastomold.

2.3.1 Medium-Voltage Cable Joints

Medium-voltage cable joints shall comply with IEEE Std 404 and IEEE Std 592 and DIN VDE 0278-623/A1, or BS 7888. Medium-voltage cable terminations shall comply with IEEE Std 48. Joints shall be the standard products of a manufacturer and shall be either of the factory preformed type or of the kit type containing tapes and other required parts. Joints shall have ratings not less than the ratings of the cables on which they are installed. Splice kits may be of the heat-shrinkable type for voltages up to 15 kV, of the premolded splice and connector type, the conventional taped type, or the resin pressure-filled overcast taped type for voltages up to 35 kV; except that for voltages of 7.5 kV or less a resin pressure-filled type utilizing a plastic-tape mold is acceptable. Joints used in manholes, handholes, vaults and pull boxes shall be certified by the manufacturer for waterproof, submersible applications.

2.3.2 Medium-Voltage Separable Insulated Connectors

Separable insulated connectors shall comply with IEEE Std 386 and IEEE Std 592 and shall be of suitable construction or standard splice kits shall be used. Separable insulated connectors are acceptable for voltages up to 35 kV. Connectors shall be of the loadbreak type as indicated, of suitable construction for the application and the type of cable connected, and shall include cable shield adaptors. Separable insulated connectors shall not be used as substitutes for conventional permanent splices. External clamping .

2.3.3 Terminations

Terminations shall be in accordance with IEEE Std 48 or IEC 60702, heat-shrinkable elastomer, or taped type. Acceptable elastomers are track-resistant silicone rubber or track-resistant ethylene propylene compounds, such as ethylene propylene rubber or ethylene propylene diene

monomer.

2.4 CONDUIT AND DUCTS

Ducts shall be single, round-bore type, with wall thickness and fittings suitable for the application.

2.4.1 Metallic Conduit

Intermediate metal conduit shall comply with UL 1242, DIN 49020, DIN 49005, DIN 40430, IEC 61386, IEC 61035, BS 4568 OR ANSI C 80.6 zinc-coated steel only.BS 31. Rigid galvanized steel conduit shall comply with IEC 61035, BS 4568, UL 6 and ANSI C80.1. Metallic conduit fittings and outlets shall comply with UL 514A and NEMA FB 1.

2.4.2 Nonmetallic Conduits

PVC conduit, fittings, and accessories Basis of Design: Juplast, Nepro, Ipex, Heritage Plastics Group, IPS, or Canalar Boru.

2.4.2.1 Concrete Encased Ducts

NEMA TC 6 Type EB or, BS 4607: Part 5.

2.4.3 Conduit Sealing Compound

Compounds for sealing ducts and conduit shall have a putty-like consistency workable with the hands at temperatures as low as 2 degrees C (35 degrees F), shall neither slump at a temperature of 150 degrees C (300 degrees F), nor harden materially when exposed to the air. Compounds shall adhere to clean surfaces of fiber or plastic ducts; metallic conduits or conduit coatings; concrete, masonry, or lead; any cable sheaths, jackets, covers, or insulation materials; and the common metals. Compounds shall form a seal without dissolving, noticeably changing characteristics, or removing any of the ingredients. Compounds shall have no injurious effect upon the hands of workmen or upon materials.

2.4.4 Cable Ladders

For manholes, use cable ladders in accordance with BS 14396, DIN EN 14396, IEC 61537, or DIN EN 61537. Dimensions will be as indicated on Drawings.

2.4.5 Connection Materials

All grounding material should be in accordance with BS 7430.

2.5 MANHOLES, HANDHOLES, AND PULLBOXES

Strength of manholes, handholes, and pullboxes and their frames and covers shall conform to the requirements of IEEE C2. Cast-in-place concrete manholes shall have the required strength established by ASTM C 478, ASTM C 478M. Frames and covers shall be made of gray cast iron and a machine-finished seat shall be provided to ensure a matching joint between frame and cover. Handholes for low voltage cables installed in parking lots, sidewalks, and turfed areas shall be fabricated from an aggregate consisting of sand and with continuous woven glass strands. Pullbox and handhole covers in sidewalks, and turfed areas shall be of the same material as the box.

All manholes at ground level shall be capable of withstanding H-20 highway loading as defined by AASHTO HB-17.

Basis of Design: Framaco or Supercast B1988-A9.

2.6 FENCING

Fencing shall conform to the requirements of Section 02821 FENCING.

2.7 GROUNDING AND BONDING

Ground rods shall be UL 467, BS 7430 or BS 6651. Copper-clad steel, with minimum diameter of 20 mm and minimum length of 3000 mm.

Basis of Design: Erico Cadweld, Wallis Systems Protection, Exoweld, or ThermOweld.

PART 3 EXECUTION

3.1 GENERAL INSTALLATION REQUIREMENTS

3.1.1 Conformance to Codes

The installation shall comply with the requirements and recommendations of NFPA 70 and IEEE C2, or BS 7671 as applicable.

3.1.2 Verification of Dimensions

The Contractor shall become familiar with details of the work, shall verify dimensions in the field, and shall advise the Government of any discrepancy before performing any work.

3.2 CABLE INSTALLATION

The Contractor shall obtain from the manufacturer an installation manual or set of instructions which addresses such aspects as cable construction, insulation type, cable diameter, bending radius, cable temperature, lubricants, coefficient of friction, conduit cleaning, storage procedures, moisture seals, testing for and purging moisture, etc. The Contractor shall then perform pulling calculations and prepare a pulling plan.

3.2.1 Cable Installation Plan and Procedure

Cable shall be installed strictly in accordance with the cable manufacturer's recommendations.

3.2.1.1 Cable Inspection

The cable reel shall be inspected for correct storage positions, signs of physical damage, and broken end seals. If end seal is broken, moisture shall be removed from cable in accordance with the cable manufacturer's recommendations.

3.2.1.2 Duct Cleaning

Duct shall be cleaned with an assembly that consists of a flexible mandrel (manufacturers standard product in lengths recommended for the specific size and type of duct) that is 6.4 mm (1/4 inch) less than inside diameter

of duct, 2 wire brushes, and a rag. The cleaning assembly shall be pulled through conduit a minimum of 2 times or until less than a volume of 131 cubic centimeters (8 cubic inches) of debris is expelled from the duct.

3.2.1.3 Duct Lubrication

The cable lubricant shall be compatible with the cable jacket for cable that is being installed. Application of lubricant shall be in accordance with lubricant manufacturer's recommendations.

3.2.1.4 Cable Installation

The Contractor shall provide a cable feeding truck and a cable pulling winch as required. The Contractor shall provide a pulling grip or pulling eye in accordance with cable manufacturer's recommendations. The pulling grip or pulling eye apparatus shall be attached to polypropylene or manilla rope followed by lubricant front end packs and then by power cables. A dynamometer shall be used to monitor pulling tension. Pulling tension shall not exceed cable manufacturer's recommendations. The Contractor shall not allow cables to cross over while cables are being fed into duct. For cable installation in cold weather, cables shall be kept at 10 degrees C (50 degrees F) temperature for at least 24 hours before installation.

3.2.2 Duct Line

Cables shall be installed in duct lines where indicated. Cable splices in low-voltage cables shall be made in manholes and handholes only, except as otherwise noted. Neutral and grounding conductors shall be installed in the same duct with their associated phase conductors.

3.2.3 Electric Manholes

Cables shall be routed around the interior walls and securely supported from walls on cables racks. Cable routing shall minimize cable crossover, provide access space for maintenance and installation of additional cables, and maintain cable separation in accordance with IEEE C2.

3.3 DUCT LINES

3.3.1 Requirements

Site Primary & Secondary Power Distribution System: This shall include installation of Primary (15kV) and Secondary Power Distribution Systems in underground, concrete encased duct-bank system. Duct-bank system shall include manholes (2.4M x 2.4M x 2.4M) for high voltage feeders and hand-holes for secondary power as required. Manholes shall be provided with cable pulling irons and a ground rod. Ground rod shall be galvanized steel, 3M long and 19mm in diameter.

Raceways: Exterior raceways (encased conduit and other conduits) shall be installed at a slope towards a manhole or hand-hole to avoid collection of water in raceway. Conduit shall be PVC, thin-wall for concrete encasement and hard-wall (Schedule 40) for direct burial. Direct buried conduit shall only be installed for street lighting circuits. Direct buried conduits shall be enclosed in concrete, when under paved areas or under road crossings. High voltage cables shall be installed in conduit no less than 100mm (4 inches) in diameter. Secondary cable shall be installed in conduit no less than 50mm (2 inches). Encased conduits shall be cleaned with a wire mandrel prior to the installation of cables. Minimum of one spare conduit

shall be provided in all duct-banks and capped at both ends. Top of the duct-bank shall be below the frost line or a minimum of 450 mm (18 inches) below grade, but not less than required in NFPA 70. Direct buried conduit shall be installed 450 mm (18 inches) below grade, but not less than required in NFPA 70.

3.3.2 Treatment

Ducts shall be kept clean of concrete, dirt, or foreign substances during construction. Field cuts requiring tapers shall be made with proper tools and match factory tapers. A coupling recommended by the duct manufacturer shall be used whenever an existing duct is connected to a duct of different material or shape. Ducts shall be stored to avoid warping and deterioration with ends sufficiently plugged to prevent entry of any water or solid substances. Ducts shall be thoroughly cleaned before being laid. Plastic ducts shall be stored on a flat surface and protected from the direct rays of the sun.

3.3.3 Concrete Encasement

Ducts requiring concrete encasements shall comply with NFPA 70, except that electrical encased conduit configurations for ducts 150 mm (6 inches) in diameter shall be determined by calculation and as shown on the drawings. The separation between adjacent electric power and communication ducts shall conform to IEEE C2. Duct line encasements shall be monolithic construction. Where a connection is made to a previously poured encasement, the new encasement shall be well bonded or doweled to the existing encasement. The Contractor shall submit proposed bonding method for approval in accordance with the detail drawing portion of paragraph SUBMITTALS. At any point, except railroad and airfield crossings, tops of concrete encasements shall be not less than the cover requirements listed in NFPA 70. At railroad and airfield crossings, duct lines shall be encased with concrete and reinforced as indicated to withstand specified surface loadings. Tops of concrete encasements shall be not less than 1.5 m below tops of rails or airfield paving unless otherwise indicated. Where ducts are jacked under existing pavement, rigid steel conduit will be installed because of its strength. To protect the corrosion-resistant conduit coating, predrilling or installing conduit inside a larger iron pipe sleeve (jack-and-sleeve) is required. For crossings of existing railroads and airfield pavements greater than 15 m in length, the predrilling method or the jack-and-sleeve method will be used. Separators or spacing blocks shall be made of steel, concrete, plastic, or a combination of these materials placed not farther apart than 1.2 m on centers. Ducts shall be securely anchored to prevent movement during the placement of concrete and joints shall be staggered at least 150 mm vertically.

3.3.4 Installation of Couplings

Joints in each type of duct shall be made up in accordance with the manufacturer's recommendations for the particular type of duct and coupling selected and as approved.

3.3.4.1 Plastic Duct

Duct joints shall be made by brushing a plastic solvent cement on insides of plastic coupling fittings and on outsides of duct ends. Each duct and fitting shall then be slipped together with a quick 1/4-turn twist to set

the joint tightly.

3.3.5 Duct Line Markers

Duct line markers shall be provided at the ends of long duct line stubouts or for other ducts whose locations are indeterminate because of duct curvature or terminations at completely below-grade structures. In addition to markers, a 0.127 mm (5 mil) brightly colored plastic tape, not less than 75 mm (3 inches) in width and suitably inscribed at not more than 3 m (10 feet) on centers with a continuous metallic backing and a corrosion-resistant 0.0254 mm (1 mil) metallic foil core to permit easy location of the duct line, shall be placed approximately 300 mm below finished grade levels of such lines.

3.4 MANHOLES, HANDHOLES, AND PULLBOXES

3.4.1 General

Manholes shall be constructed approximately where shown. The exact location of each manhole shall be determined after careful consideration has been given to the location of other utilities, grading, and paving. The location of each manhole shall be approved by the Government before construction of the manhole is started. Manholes shall be the type noted on the drawings and shall be constructed in accordance with the applicable details as indicated. Top, walls, and bottom shall consist of reinforced concrete. In paved areas, frames and covers for manhole and handhole entrances in vehicular traffic areas shall be flush with the finished surface of the paving. In unpaved areas, the top of manhole covers shall be approximately 5 mm above the finished grade. Where existing grades that are higher than finished grades are encountered, concrete assemblies designed for the purpose shall be installed to elevate temporarily the manhole cover to existing grade level. All duct lines entering manholes must be installed on compact soil or otherwise supported when entering a manhole to prevent shear stress on the duct at the point of entrance to the manhole. Duct lines entering cast-in-place concrete manholes shall be cast in-place with the manhole. Duct lines entering precast concrete manholes through a precast knockout penetration shall be grouted tight with a portland cement mortar. PVC duct lines entering precast manholes through a PVC endbell shall be solvent welded to the endbell. A cast metal grille-type sump frame and cover shall be installed over the manhole sump.

3.4.2 Electric Manholes

Cables shall be securely supported from walls according to International Building Code requirements and ASTM standards.

3.4.3 Communications Manholes

Cables shall be securely supported from walls according.

3.4.4 Handholes

Handholes shall be located approximately as shown. Handholes shall be of the type noted on the drawings and shall be constructed in accordance with the details shown.

3.4.5 Ground Rods

A ground rod shall be installed at the manholes, handholes and pullboxes.

Ground rods shall be driven into the earth before the manhole floor is poured so that approximately 100 mm of the ground rod will extend above the manhole floor. When precast concrete manholes are used, the top of the ground rod may be below the manhole floor and a 50 square millimeters ground conductor brought into the manhole through a watertight sleeve in the manhole wall.

3.5 GROUNDING

A ground ring consisting of the indicated configuration of bare copper conductors and driven ground rods shall be installed around pad-mounted equipment as shown. Equipment frames of metal-enclosed equipment, and other noncurrent-carrying metal parts, such as cable shields, cable sheaths and armor, and metallic conduit shall be grounded. At least 2 connections shall be provided from a transformer, to the ground mat. Metallic frames and covers of handholes and pull boxes shall be grounded by use of a braided, copper ground strap with equivalent ampacity of 16 square millimeters.

3.5.1 Grounding Electrodes

Grounding electrodes shall be installed as shown on the drawings.

3.5.1.1 Additional Electrodes

When the required ground resistance is not met, additional electrodes shall be provided interconnected with grounding conductors to achieve the specified ground resistance. The additional electrodes will be up to three, 3 m (10 feet) rods spaced a minimum of 3 m apart. If the resultant resistance exceeds 25 ohms measured not less than 48 hours after rainfall, the Government shall be notified immediately.

3.5.2 Grounding and Bonding Connections

Connections above grade shall be made by the fusion-welding process or with bolted solderless connectors, in compliance with UL 467, and those below grade shall be made by a fusion-welding process. Where grounding conductors are connected to aluminum-composition conductors, specially treated or lined copper-to-aluminum connectors suitable for this purpose shall be used.

3.5.3 Grounding and Bonding Conductors

Grounding and bonding conductors include conductors used to bond transformer enclosures and equipment frames to the grounding electrode system. Grounding and bonding conductors shall be sized as shown, and located to provide maximum physical protection. Bends greater than 45 degrees in ground conductors are not permitted. Routing of ground conductors through concrete shall be avoided. When concrete penetration is necessary, nonmetallic conduit shall be cast flush with the points of concrete entrance and exit so as to provide an opening for the ground conductor, and the opening shall be sealed with a suitable compound after installation.

3.5.4 Manhole, Handhole, or Concrete Pullbox Grounding

Ground rods installed in manholes, handholes, or concrete pullboxes shall be connected according to International Building Code requirements and ASTM standards.

3.5.5 Metal Splice Case Grounding

Metal splice cases for medium-voltage direct-burial cable shall be grounded by connection to a driven ground rod located within 600 mm of each splice box using a grounding electrode conductor having a current-carrying capacity of at least 20 percent of the individual phase conductors in the associated splice box, but not less than 16 square millimeters.

3.6 TESTS, INSPECTIONS, AND VERIFICATIONS

3.6.1 Inspection and Tests

Inspection and tests of wire and cable furnished under these specifications shall be made by and at the plant of the manufacturer, and shall be witnessed by the Government or his authorized representative, unless waived in writing. The Government may perform further tests before or after installation. Testing in general shall comply with NEMA WC 70. Specific tests required for particular materials, components, and completed cables shall be as specified in the sections of the above standards applicable to those materials, components, and cable types. Tests shall also be performed in accordance with the additional requirements specified below.

3.6.1.1 High-Voltage Test Source

Where the applicable standards allow a choice, high-voltage tests for cables to be used exclusively on dc circuits shall be made with dc test voltages. Cables to be used exclusively on ac circuits shall be tested with ac test voltages. If both ac and dc will be present, on either the same or separate conductors of the cable, ac test voltages shall be used.

3.7 ACCEPTANCE

Final acceptance of the facility will not be given until all defects in installation, material or operation have been corrected. Provide as-built drawings to Government at system acceptance.

-- End of Section --

SECTION 16402

INTERIOR DISTRIBUTION SYSTEM

PART 1 GENERAL

1.1 REFERENCES

The publications listed below form a part of this specification to the extent referenced. The publications are referred to in the text by the basic designation only.

AMERICAN NATIONAL STANDARDS INSTITUTE (ANSI)

ANSI C80.5	(1994) Aluminum Rigid Conduit (ARC)

ASTM INTERNATIONAL (ASTM)

ASTM B 1	(2001) Hard-Drawn Copper Wire
ASTM B 8	(2004) Concentric-Lay-Stranded Copper Conductors, Hard, Medium-Hard, or Soft
ASTM D 709	(2001) Laminated Thermosetting Materials

ELECTRONIC INDUSTRIES ALLIANCE (EIA)

EIA TIA/EIA-569-A	(1998; Addenda 2000, 2001) Commercial Building Standards for Telecommunications Pathways and Spaces (ANSI/TIA/EIA-569-A)
TIA J-STD-607-A	(2002) Commercial Building Grounding (Earthing) and Bonding Requirements for Telecommunications

INSTITUTE OF ELECTRICAL AND ELECTRONICS ENGINEERS (IEEE)

IEEE Std 100	(2000) The Authoritave Dictionary of IEEE Standards Terms

NATIONAL ELECTRICAL MANUFACTURERS ASSOCIATION (NEMA)

NEMA 250	(2003) Enclosures for Electrical Equipment (1000 Volts Maximum)
NEMA BU 1	(1999) Busways
NEMA C80.1	(1994) Rigid Steel Conduit - Zinc Coated (GRC)
NEMA C80.3	(1994) Electrical Metallic Tubing - Zinc Coated (EMT)
NEMA FU 1	(2002) Low Voltage Cartridge Fuses
NEMA ICS 1	(2000) Industrial Control and Systems: General Requirements

NEMA ICS 2	(2000; R 2004) Industrial Controls and Systems: Controllers, Contactors, and Overload Relays Rated Not More than 2000 Volts AC or 750 Volts DC
NEMA ICS 4	(2000) Industrial Control and Systems: Terminal Blocks
NEMA ICS 6	(1993; R 2001) Industrial Control and Systems: Enclosures
NEMA KS 1	(2001) Enclosed and Miscellaneous Distribution Equipment Switches (600 Volts Maximum)
NEMA MG 1	(2003; R 2004) Motors and Generators
NEMA MG 10	(2001) Energy Management Guide for Selection and Use of Fixed Frequency Medium AC Squirrel-Cage Polyphase Induction Motors
NEMA MG 11	(1977; R 1997; R 2001) Energy Management Guide for Selection and Use of Single Phase Motors
NEMA RN 1	(1998) Polyvinyl Chloride (PVC) Externally Coated Galvanized Rigid Steel Conduit and Intermediate Metal Conduit
NEMA ST 20	(1992; R 1997) Dry-Type Transformers for General Applications
NEMA TC 2	(2003) Electrical Polyvinyl Chloride (PVC) Tubing and Conduit
NEMA TC 3	(2004) Polyvinyl Chloride PVC Fittings for Use with Rigid PVC Conduit and Tubing
NEMA TP 1	(2002) Guide for Determining Energy Efficiency for Distribution Transformers
NEMA VE 1	(2002) Metal Cable Tray Systems
NEMA WD 1	(1999) General Color Requirements for Wiring Devices
NEMA WD 6	(2002) Wiring Devices - Dimensional Requirements
NEMA Z535.4	(2002) Product Safety Signs and Labels

NATIONAL FIRE PROTECTION ASSOCIATION (NFPA)

NFPA 70	(2005) National Electrical Code
NFPA 70E	(2004) Electrical Safety in the Workplace

U.S. NATIONAL ARCHIVES AND RECORDS ADMINISTRATION (NARA)

29 CFR 1910.147	Control of Hazardous Energy (Lock Out/Tag Out)

UNDERWRITERS LABORATORIES (UL)

UL 1	(2005) Flexible Metal Conduit
UL 1063	(1998; Rev thru Jun 2001) Machine-Tools Wires and Cables
UL 1242	(2000; Rev thru May 2003) Electrical Intermediate Metal Conduit -- Steel
UL 1449	(1996; Rev thru Jul 2002) Transient Voltage Surge Suppressors
UL 1561	(1999; Rev thru Feb 2004) Dry-Type General Purpose and Power Transformers
UL 1569	(1999; Rev thru Mar 2004) Metal-Clad Cables
UL 1660	(2004) Liquid-Tight Flexible Nonmetallic Conduit
UL 1699	(1999; Rev thru May 2003) Arc-Fault Circuit-Interrupters
UL 198C	(1986; Rev thru Feb 1998)High-Interrupting-Capacity Fuses, Current-Limiting Types
UL 198E	(1988; Rev Jul 1988) Class R Fuses
UL 198H	(1988; Rev thru Nov 1993) Class T Fuses
UL 20	(2000; Rev thru Jun 2002) General-Use Snap Switches
UL 360	(2003) Liquid-Tight Flexible Steel Conduits
UL 4	(2004) Armored Cable
UL 44	(1999; Rev thru May 2002) Thermoset-Insulated Wires and Cables
UL 467	(2004) Grounding and Bonding Equipment
UL 486A-486B	(2003; Rev thru Apr 2004) Wire Connectors
UL 486C	(2004) Splicing Wire Connectors
UL 489	(2002; Rev thru May 2003) Molded-Case Circuit Breakers, Molded-Case Switches, and Circuit-Breaker Enclosures
UL 498	(2001; Rev thru Oct 2002) Attachment Plugs and Receptacles

UL 5	(2004) Surface Metal Raceways and Fittings
UL 50	(1995; Rev thru Sep 2003) Enclosures for Electrical Equipment
UL 506	(2000; Rev thru Feb 2004) Specialty Transformers
UL 508	(1999; Rev thru Dec 2003) Industrial Control Equipment
UL 510	(2005) Polyvinyl Chloride, Polyethylene, and Rubber Insulating Tape
UL 512	(1993; Rev thru Mar 1999) Fuseholders
UL 514A	(2004) Metallic Outlet Boxes
UL 514B	(2004) Conduit, Tubing and Cable Fittings
UL 514C	(1996; Rev thru Nov 2002) Nonmetallic Outlet Boxes, Flush-Device Boxes, and Covers
UL 6	(2000; Rev thru May 2003) Rigid Metal Conduit
UL 651	(2000) Schedule 40 and 80 Rigid PVC Conduit
UL 67	(1993; Rev thru Nov 2003) Panelboards
UL 6A	(2000; Rev thru Jan 2004) Electrical Rigid Metal Conduit - Aluminum, Bronze, and Stainless Steel
UL 719	(2002; Rev thru May 2003) Nonmetallic-Sheathed Cables
UL 797	(2004) Electrical Metallic Tubing -- Steel
UL 817	(2001; Rev thru Jan 2004) Cord Sets and Power-Supply Cords
UL 83	(2003; Rev thru Mar 2004) Thermoplastic-Insulated Wires and Cables
UL 854	(2004) Service-Entrance Cables
UL 857	(2001; Rev thru Nov 2002) Busways
UL 869A	(1998) Reference Standard for Service Equipment
UL 870	(1995; Rev thru Jul 2003) Wireways, Auxiliary Gutters, and Associated Fittings
UL 943	(1993; Rev thru Feb 2004) Ground-Fault Circuit-Interrupters

UL 984 (1996) Hermetic Refrigerant Motor-Compressors

1.2 DEFINITIONS

Unless otherwise specified or indicated, electrical and electronics terms used in these specifications, and on the drawings, shall be as defined in IEEE Std 100.

1.3 SUBMITTALS

Government approval is required for submittals with a "G" designation; submittals not having a "G" designation are for information only. When used, a designation following the "G" designation identifies the office that will review the submittal for the Government. The following shall be submitted in accordance with Section 01330 SUBMITTAL PROCEDURES:

SD-02 Shop Drawings

Panelboards; G RE

Transformers; G RE

Busway; G RE

Cable trays; G RE

Motor control centers; G RE

Include wiring diagrams and installation details of equipment indicating proposed location, layout and arrangement, control panels, accessories, piping, ductwork, and other items that must be shown to ensure a coordinated installation. Wiring diagrams shall identify circuit terminals and indicate the internal wiring for each item of equipment and the interconnection between each item of equipment. Drawings shall indicate adequate clearance for operation, maintenance, and replacement of operating equipment devices.

Wireways; G RE

SD-03 Product Data

Receptacles; G RE

Circuit breakers; G RE

Switches; G RE

Transformers; G RE

Enclosed circuit breakers; G RE

Motor controllers; G RE

Combination motor controllers; G RE

Manual motor starters; G RE

Metering; G RE

CATV outlets; G RE

Telecommunications Grounding Busbar; G RE

Surge protective devices; G RE

Submittals shall include performance and characteristic curves.

SD-06 Test Reports

600-volt wiring test; G RE

Grounding system test; G RE

Transformer tests; G RE

Ground-fault receptacle test; G RE

SD-07 Certificates

Fuses; G RE

SD-09 Manufacturer's Field Reports

Transformer factory tests

]1.4 QUALITY ASSURANCE

1.4.1 Fuses

Submit coordination data as specified in paragraph, FUSES of this section.

1.4.2 Regulatory Requirements

In each of the publications referred to herein, consider the advisory provisions to be mandatory, as though the word, "shall" had been substituted for "should" wherever it appears. Interpret references in these publications to the "authority having jurisdiction," or words of similar meaning, to mean the Contracting Officer. Equipment, materials, installation, and workmanship shall be in accordance with the mandatory and advisory provisions of NFPA 70 unless more stringent requirements are specified or indicated.

1.4.3 Standard Products

Provide materials and equipment that are products of manufacturers regularly engaged in the production of such products which are of equal material, design and workmanship. Products shall have been in satisfactory commercial or industrial use for 2 years prior to bid opening. The 2-year period shall include applications of equipment and materials under similar circumstances and of similar size. The product shall have been on sale on the commercial market through advertisements, manufacturers' catalogs, or brochures during the 2-year period. Where two or more items of the same class of equipment are required, these items shall be products of a single manufacturer; however, the component parts of the item need not be the products of the same manufacturer unless stated in this section.

1.4.3.1 Alternative Qualifications

Products having less than a 2-year field service record will be acceptable if a certified record of satisfactory field operation for not less than 6000 hours, exclusive of the manufacturers' factory or laboratory tests, is furnished.

1.4.3.2 Material and Equipment Manufacturing Date

Products manufactured more than 3 years prior to date of delivery to site shall not be used, unless specified otherwise.

1.5 MAINTENANCE

1.5.1 Electrical Systems

Submit operation and maintenance manuals for electrical systems that provide basic data relating to the design, operation, and maintenance of the electrical distribution system for the building. This shall include:

a. Single line diagram of the "as-built" building electrical system.

b. Schematic diagram of electrical control system (other than HVAC, covered elsewhere).

c. Manufacturers' operating and maintenance manuals on active electrical equipment.

1.6 WARRANTY

The equipment items shall be supported by service organizations which are reasonably convenient to the equipment installation in order to render satisfactory service to the equipment on a regular and emergency basis during the warranty period of the contract.

1.7 SEISMIC REQUIREMENTS

Seismic details shall conform to Section 13080, SEISMIC PROTECTION FOR MISCELLANEOUS EQUIPMENT and to Section 16070, SEISMIC PROTECTION FOR ELECTRICAL EQUIPMENT].

PART 2 PRODUCTS

2.1 MATERIALS AND EQUIPMENT

Materials, equipment, and devices shall, as a minimum, meet requirements of UL, where UL standards are established for those items, and requirements of NFPA 70.

2.2 CONDUIT AND FITTINGS

Shall conform to the following:

2.2.1 Rigid Metallic Conduit

2.2.1.1 Rigid, Threaded Zinc-Coated Steel Conduit

NEMA C80.1, UL 6.

2.2.1.2 Rigid Aluminum Conduit

ANSI C80.5, UL 6A.

2.2.2 Rigid Nonmetallic Conduit

PVC Type EPC-40, and EPC-80 in accordance with NEMA TC 2,UL 651.

2.2.3 Intermediate Metal Conduit (IMC)

UL 1242, zinc-coated steel only.

2.2.4 Electrical, Zinc-Coated Steel Metallic Tubing (EMT)

UL 797, NEMA C80.3.

2.2.5 Plastic-Coated Rigid Steel and IMC Conduit

NEMA RN 1, Type 40(one millimeter (40 mils) thick).

2.2.6 Flexible Metal Conduit

UL 1.

2.2.6.1 Liquid-Tight Flexible Metal Conduit, Steel

UL 360.

2.2.7 Fittings for Metal Conduit, EMT, and Flexible Metal Conduit

UL 514B. Ferrous fittings shall be cadmium- or zinc-coated in accordance with UL 514B.

2.2.7.1 Fittings for Rigid Metal Conduit and IMC

Threaded-type. Split couplings unacceptable.

2.2.7.2 Fittings for EMT

Steel compression type.

2.2.8 Fittings for Rigid Nonmetallic Conduit

NEMA TC 3 for PVC, and UL 514B.

2.2.9 Liquid-Tight Flexible Nonmetallic Conduit

UL 1660.

2.3 SURFACE RACEWAY

2.3.1 Surface Metal Raceway

UL 5, two-piece painted steel, totally enclosed, snap-cover type. Provide multiple outlet-type raceway with grounding-type receptacle where indicated.

2.3.2 Surface Nonmetallic Raceway

Provide multiple outlet-type raceway with grounding-type receptacle where indicated.

2.4 BUSWAY

NEMA BU 1, UL 857. Buses shall be copper. Busways shall be rated as shown on contract drawing. Short circuit rating shall be as indicated. Busway systems shall be suitable for use indoors. Enclosures shall be steel. Hardware shall be plated or otherwise protected to resist corrosion. Joints shall be one-bolt type with through-bolts, which can be checked for tightness without deenergizing system. Maximum hot spot temperature rise at any point in busway at continuous rated load shall not exceed 55 degrees C above maximum ambient temperature of 40 degrees C in any position. Provide internal barriers to prevent movement of superheated gases. Contractor shall coordinate proper voltage phasing of entire bus duct system, for example where busway interfaces with transformers, switchgear, switchboards, motor control centers, and other system components.

2.4.1 Feeder Busways

Provide ventilated, except that vertical busways within 1830 mm of floors shall be unventilated, low-impedance busway. Bus bars shall be fully covered with insulating material, except at stabs. Entire busway system shall be polarized.

2.5 CABLE TRAYS, COMMUNICATION SYSTEMS

NEMA VE 1. Cable trays shall form a wireway system, and shall be sized in accordance with the drawings. Cable trays shall be constructed of steel that has been zinc-coated after fabrication. Trays shall include splice and end plates, dropouts, and miscellaneous hardware. Edges, fittings, and hardware shall be finished free from burrs and sharp edges. Fittings shall have not less than load-carrying ability of straight tray sections and shall have manufacturer's minimum standard radius.

2.5.1 Ladder-Type Cable Trays

Provide size as indicated on the drawings.

2.5.2 Solid Bottom-Type Cable Trays

Provide size as indicated on the drawings. Solid covers shall not be provided. Cable tray shall be connected to the outlets via conduit sized in accordance with the drawings.

2.6 OUTLET BOXES AND COVERS

UL 514A, cadmium- or zinc-coated, if ferrous metal. UL 514C, if nonmetallic.

2.6.1 Floor Outlet Boxes

Boxes shall be adjustable and concrete tight. Each outlet shall consist of cast-metal body with threaded openings, or sheet-steel body with knockouts for conduits, adjustable brass flange, and cover plate with 25 mm threaded plug. Telecommunications outlets shall consist of surface-mounted, horizontal or flush stainless steel housing with a receptacle as specified

and 25 mm top opening. Receptacle outlets shall consist of surface-mounted, horizontal or flush stainless steel housing with duplex-type receptacle. Provide gaskets where necessary to ensure watertight installation.

2.6.2 Outlet Boxes for Telecommunications System

Provide standard type 120 mm square by 54 mm deep. Outlet boxes for wall-mounted telecommunications outlets shall be 120 mm square by 54 mm deep. Outlet boxes shall include a minimum 10 mm deep plaster ring installed. Conduit sizes shall be installed in accordance with the drawings.

2.7 CABINETS, JUNCTION BOXES, AND PULL BOXES

Volume greater than 1640 mL, UL 50, hot-dip, zinc-coated, if sheet steel.

2.8 WIRES AND CABLES

Wires and cables shall meet applicable requirements of NFPA 70 and UL for type of insulation, jacket, and conductor specified or indicated. Wires and cables manufactured more than 12 months prior to date of delivery to site shall not be used.

2.8.1 Conductors

Conductors 10 mm square (8 AWG) and larger diameter shall be stranded. Conductors 6 mm square and smaller diameter shall be solid, except that conductors for remote control, alarm, and signal circuits, classes 1, 2, and 3, shall be stranded unless specifically indicated otherwise. Conductor sizes and ampacities shown are based on copper, unless indicated otherwise. All conductors shall be copper.

2.8.1.1 Equipment Manufacturer Requirements

When manufacturer's equipment requires copper conductors at the terminations or requires copper conductors to be provided between components of equipment, provide copper conductors or splices, splice boxes, and other work required to satisfy manufacturer's requirements.

2.8.1.2 Minimum Conductor Sizes

Minimum size for branch circuits shall be 4 mm square (12 AWG); for Class 1 remote-control and signal circuits, 2.5 mm square (14 AWG); for Class 2 low-energy, remote-control and signal circuits, 1.5 mm square (AWG); and for Class 3 low-energy, remote-control, alarm and signal circuits, 1.5 mm square AWG.

2.8.2 Color Coding

Provide for service, feeder, branch, control, and signaling circuit conductors. Color shall be green for grounding conductors and white for neutrals; except where neutrals of more than one system are installed in same raceway or box, other neutrals shall be white with a different colored (not green) stripe for each. Color of ungrounded conductors in different voltage systems shall be as follows:

a. 380/220 volt, three-phase

(1) Phase A - black

(2) Phase B - red

(3) Phase C - blue

b. 220/240 volt, single phase: Black and red

c. On three-phase, four-wire delta system, high leg shall be orange, as required by NFPA 70.

2.8.3 Insulation

Unless specified or indicated otherwise or required by NFPA 70, power and lighting wires shall be 600-volt, Type THWN/THHN conforming to UL 83 or Type XHHW or RHW conforming to UL 44, except that grounding wire may be type TW conforming to UL 83; remote-control and signal circuits shall be Type TW or TF, conforming to UL 83. Where lighting fixtures require 90-degree Centigrade (C) conductors, provide only conductors with 90-degree C insulation or better.

2.8.4 Bonding Conductors

ASTM B 1, solid bare copper wire for sizes 10 mm square (8 AWG) and smaller diameter; ASTM B 8, Class B, stranded bare copper wire for sizes 16 mm square AWG and larger diameter.

2.8.4.1 Telecommunications Bonding Backbone (TBB)

Provide a copper conductor TBB in accordance with TIA J-STD-607-A. The TBB shall be a minimum No. 6 AWG and be sized at 2 kcmil per linear foot of conductor length up to a maximum size of 3/0 AWG.

2.8.4.2 Bonding Conductor for Telecommunications

Provide a copper conductor Bonding Conductor for Telecommunications between the telecommunications main grounding busbar (TMGB) and the electrical service ground in accordance with TIA J-STD-607-A. The bonding conductor for telecommunications shall be sized the same as the TBB.

2.8.5 Service Entrance Cables

Service Entrance (SE) and Underground Service Entrance (USE) Cables, UL 854.

2.8.6 Nonmetallic Sheathed Cable

UL 719, Type NM or NMC.

2.8.7 Wire and Cable for 400 Hertz (Hz) Circuits

Insulated copper conductors.

2.8.8 Metal-Clad Cable

UL 1569; NFPA 70, Type MC cable.

2.8.9 Armored Cable

UL 4; NFPA 70, Type AC cable.

2.8.10 Mineral-Insulated, Metal-Sheathed Cable

UL listed; NFPA 70, Type MI cable. Sheathing containing asbestos fibers shall not be used.

2.8.11 Flat Conductor Cable

UL listed; NFPA 70, Type FCC.

2.8.12 Cable Tray Cable or Power Limited Tray Cable

UL listed; type TC or PLTC.

2.8.13 Cord Sets and Power-Supply Cords

UL 817.

2.9 SPLICES AND TERMINATION COMPONENTS

UL 486A-486B for wire connectors and UL 510 for insulating tapes. Connectors for 6 mm square (10 AWG) and smaller diameter wires shall be insulated, pressure-type in accordance with UL 486A-486B or UL 486C (twist-on splicing connector). Provide solderless terminal lugs on stranded conductors.

2.10 DEVICE PLATES

Provide UL listed, one-piece device plates for outlets to suit the devices installed. For metal outlet boxes, plates on unfinished walls shall be of zinc-coated sheet steel or cast metal having round or beveled edges. For nonmetallic boxes and fittings, other suitable plates may be provided. Plates on finished walls shall be satin finish stainless steel or brushed-finish aluminum, minimum 0.792 mm thick. Screws shall be machine-type with countersunk heads in color to match finish of plate. Sectional type device plates will not be permitted. Plates installed in wet locations shall be gasketed and UL listed for "wet locations." Device plates in areas normally accessible to prisoners shall be brown or ivory finish nylon-device plates rated for high abuse. Test device plates for compliance with UL 514A and UL 514C for physical strength. Attach device plates with spanner head bolts.

2.11 SWITCHES

2.11.1 Toggle Switches

NEMA WD 1, UL 20, single pole, double pole, three-way, and four-way, totally enclosed with bodies of thermoplastic or thermoset plastic and mounting strap with grounding screw. Handles shall be ivory thermoplastic. Wiring terminals shall be screw-type, side-wired or of the solderless pressure type having suitable conductor-release arrangement. Contacts shall be silver-cadmium and contact arm shall be one-piece copper alloy. Switches shall be rated quiet-type ac only, 120/277 volts, with current rating and number of poles indicated.

2.11.2 Switch with Red Pilot Handle

NEMA WD 1. Provide pilot lights that are integrally constructed as a part of the switch's handle. The pilot light shall be red and shall illuminate

whenever the switch is closed or "on". The pilot lighted switch shall be rated 20 amps and 220 volts or 277 volts as indicated. Provide the circuit's neutral conductor to each switch with a pilot light.

2.11.3 Breakers Used as Switches

For 220-Volt fluorescent fixtures, mark breakers "SWD" in accordance with UL 489.

2.11.4 Disconnect Switches

NEMA KS 1. Provide heavy duty-type switches where indicated, where switches are rated higher than 240 volts, and for double-throw switches. Fused switches shall utilize Class R fuseholders and fuses, unless indicated otherwise. Switches serving as motor-disconnect means shall be horsepower rated. Provide switches in NEMA 6, enclosure as indicated per NEMA ICS 6.

2.12 FUSES

NEMA FU 1. Provide complete set of fuses for each fusible switch panel and control center. Time-current characteristics curves of fuses serving motors or connected in series with circuit breakers or other circuit protective devices shall be coordinated for proper operation. Submit coordination data for approval. Fuses shall have voltage rating not less than circuit voltage.

2.12.1 Fuseholders

Provide in accordance with UL 512.

2.12.2 Cartridge Fuses, Current Limiting Type (Class R)

UL 198E, Class RK-1 or RK-5 time-delay type as recommended by equipment manufacturer. Associated fuseholders shall be Class R only.

2.12.3 Cartridge Fuses, High-Interrupting Capacity, Current Limiting Type (Classes J, L, and CC)

UL 198C, Class J for zero to 600 amperes, Class L for 601 to 6,000 amperes, and Class CC for zero to 30 amperes.

2.12.4 Cartridge Fuses, Current Limiting Type (Class T)

UL 198H, Class T for zero to 1,200 amperes, 300 volts; and zero to 800 amperes, 600 volts.

2.13 RECEPTACLES

UL 498, hard use, heavy-duty, UL 498, hospital grade, grounding-type. Ratings and configurations shall be as indicated. Bodies shall be of ivory as per NEMA WD 1. Face and body shall be thermoplastic supported on a metal mounting strap. Dimensional requirements shall be per NEMA WD 6. Provide screw-type, side-wired wiring terminals or of the solderless pressure type having suitable conductor-release arrangement. Connect grounding pole to mounting strap. The receptacle shall contain triple-wipe power contacts and double or triple-wipe ground contacts.

2.13.1 Switched Duplex Receptacles

Provide separate terminals for each ungrounded pole. Top receptacle shall be switched when installed.

2.13.2 Weatherproof Receptacles

Provide in cast metal box with gasketed, weatherproof, cast-metal cover plate and gasketed cap over each receptacle opening. Provide caps with a spring-hinged flap. Receptacle shall be UL listed for use in "wet locations with plug in use."

2.13.3 Ground-Fault Circuit Interrupter Receptacles

UL 943, duplex type for mounting in standard outlet box. Device shall be capable of detecting current leak of 6 milliamperes or greater and tripping per requirements of UL 943 for Class A GFCI and GFI devices. Provide screw-type, side-wired wiring terminals or pre-wired (pigtail) leads.

2.13.4 Special Purpose Receptacles

Provide in ratings indicated.

2.13.5 Plugs

Provide heavy-duty, rubber-covered three-, or four-,wire cord as required for all Contractor furnished appliances and equipment of required size, install plugs thereon, and attach to equipment. Plugs shall be UL listed with receptacles, complete with grounding blades. Where equipment is not available, turn over plugs and cord assemblies to the Government.

2.13.6 Range Receptacles

NEMA 14-50 configuration, flush mounted for housing units, rated 50 amperes, 220 volts. Furnish one matching plug with each receptacle.

2.13.7 Dryer Receptacles

NEMA 14-30 configuration, rated 30 amperes, 220 volts. Furnish one matching plug with each receptacle.

2.14 PANELBOARDS

UL 67 and UL 50 having a short-circuit current rating as indicated. Panelboards for use as service disconnecting means shall additionally conform to UL 869A. Panelboards shall be circuit breaker-equipped. Design shall be such that individual breakers can be removed without disturbing adjacent units or without loosening or removing supplemental insulation supplied as means of obtaining clearances as required by UL. "Specific breaker placement" is required in panelboards to match the breaker placement indicated in the panelboard schedule on the drawings. Use of "Subfeed Breakers" is not acceptable unless specifically indicated otherwise. Main breaker shall be "separately" mounted "above" or "below" branch breakers. Where "space only" is indicated, make provisions for future installation of breakers. Directories shall indicate load served by each circuit in panelboard. Directories shall also indicate source of service to panelboard (e.g., Panel PA served from Panel MDP). Type directories and mount in holder behind transparent protective covering. Panelboards shall be listed and labeled for their intended use. Panelboard

shall have nameplates in accordance with paragraph FIELD FABRICATED NAMEPLATES.

UL 67 and UL 50. Panelboards for use as service disconnecting means shall additionally conform to UL 869A. Panelboards shall be circuit breaker-equipped. Design shall be such that individual breakers can be removed without disturbing adjacent units or without loosening or removing supplemental insulation supplied as means of obtaining clearances as required by UL. Where "space only" is indicated, make provisions for future installation of breaker sized as indicated. Directories shall indicate load served by each circuit of panelboard. Directories shall also indicate source of service (upstream panel, switchboard, motor control center, etc.) to panelboard. Type directories and mount in holder behind transparent protective covering. Panelboard shall have nameplates in accordance with paragraph FIELD FABRICATED NAMEPLATES.

2.14.1 Enclosure

Enclosures shall meet the requirements of UL 50. All cabinets shall be fabricated from sheet steel of not less than 3.5 millimeters (No. 10 gauge if flush-mounted or mounted outdoors, and not less than 2.7 millimeters (No. 12 gauge) if surface-mounted indoors, with full seam-welded box ends. Cabinets mounted outdoors or flush-mounted shall be hot-dipped galvanized after fabrication. Cabinets shall be painted in accordance with paragraph PAINTING. Outdoor cabinets shall be of NEMA 3R raintight with conduit hubs welded to the cabinet][a removable steel plate 7 millimeters (1/4 inch) thick in the bottom for field drilling for conduit connections. Front edges of cabinets shall be form-flanged or fitted with structural shapes welded or riveted to the sheet steel, for supporting the panelboard front. All cabinets shall be so fabricated that no part of any surface on the finished cabinet shall deviate from a true plane by more than 3 millimeters (1/8 inch). Holes shall be provided in the back of indoor surface-mounted cabinets, with outside spacers and inside stiffeners, for mounting the cabinets with a 15 millimeter (1/2 inch) clear space between the back of the cabinet and the wall surface. Flush doors shall be mounted on hinges that expose only the hinge roll to view when the door is closed. Each door shall be fitted with a combined catch and lock, except that doors over 600 millimeters (24 inches) long shall be provided with a three-point latch having a knob with a T-handle, and a cylinder lock. Two keys shall be provided with each lock, and all locks shall be keyed alike. Finished-head cap screws shall be provided for mounting the panelboard fronts on the cabinets.

2.14.2 Panelboard Buses

Support bus bars on bases independent of circuit breakers. Main buses and back pans shall be designed so that breakers may be changed without machining, drilling, or tapping. Provide isolated neutral bus in each panel for connection of circuit neutral conductors. Provide separate ground bus identified as equipment grounding bus per UL 67 for connecting grounding conductors; bond to steel cabinet. In addition to equipment grounding bus, provide second "isolated" ground bus, where indicated.

2.14.2.1 Panelboard Neutrals for Non-Linear Loads

UL listed, and panelboard type shall have been specifically UL heat rise tested for use on non-linear loads. Panelboard shall be heat rise tested in accordance with UL 67, except with the neutral assembly installed and carrying 200 percent of the phase bus current during testing. Verification

of the testing procedure shall be provided upon request. Two neutral assemblies paralleled together with cable is not acceptable. Nameplates for panelboard rated for use on non-linear loads shall be marked "SUITABLE FOR NON-LINEAR LOADS"and shall be in accordance with paragraph FIELD FABRICATED NAMEPLATES. Provide a neutral label with instructions for wiring the neutral of panelboards rated for use on non-linear loads.

2.14.3 Circuit Breakers

UL 489, thermal magnetic-type having a minimum short-circuit current rating equal to the short-circuit current rating of the panelboard in which the circuit breaker shall be mounted. Breaker terminals shall be UL listed as suitable for type of conductor provided. Where indicated on the drawings, provide circuit breakers with shunt trip devices. Series rated circuit breakers and plug-in circuit breakers without a self-contained bracket and not secured by a positive locking device requiring mechanical release for removal are unacceptable. Series rated circuit breakers and plug-in circuit breakers are unacceptable.

2.14.3.1 Multipole Breakers

Provide common trip-type with single operating handle. Breaker design shall be such that overload in one pole automatically causes all poles to open. Maintain phase sequence throughout each panel so that any three adjacent breaker poles are connected to Phases A, B, and C, respectively.

2.14.3.2 Circuit Breaker With GFCIor GFI

UL 943 and NFPA 70. Provide with "push-to-test" button, visible indication of tripped condition, and ability to detect and trip on current imbalance of 6 milliamperes or greater per requirements of UL 943 for Class A GFCIor GFI devices, for personnel protection, and 20 milliamperes or greater per requirements of UL 943 for Class B GFCI or GFI per equipment protection as indicated.

2.14.3.3 Circuit Breakers for HVAC Equipment

Circuit breakers for HVAC equipment having motors (group or individual) shall be marked for use with HACR type and UL listed as HACR type.

2.14.3.4 Arc-Fault Circuit-Interrupters

UL 489, UL 1699 and NFPA 70. Molded case circuit breaker shall be rated as indicated. Two pole arc-fault circuit-interrupters shall be rated 220 volts. The provision of (two) one pole circuit breakers for shared neutral circuits in lieu of (one) two pole circuit breaker is unacceptable. Provide with "push-to-test" button.

2.15 LOAD CENTERS FOR HOUSING UNITS

2.15.1 Panelboard Buses

Support bus bars on bases independent of circuit breakers. Main buses and back pans shall be designed so that breakers may be changed without machining, drilling, or tapping. Bus bars shall be copper or aluminum, and shall be tin plated or silver plated. Provide isolated neutral bus in each panel for connection of circuit neutral conductors. Provide separate ground bus identified as equipment grounding bus per UL 67 for connecting

grounding conductors; bond to steel cabinet.

2.15.2 Circuit Breakers

UL 489 thermal magnetic type having a minimum short-circuit current rating equal to the short-circuit current rating of the panelboard in which the circuit breaker will be mounted. Breaker terminals shall be UL listed as suitable for type of conductor provided. Half-size and tandem breakers are not acceptable. 15 and 20 ampere breakers shall be switch duty rated. Breakers shall not require use of panel trim to secure them to the bus.

2.15.2.1 Multipole Breakers

Provide common trip-type with single operating handle. Breaker design shall be such that overload in one pole automatically causes all poles to open. Maintain phase sequence throughout each panel so that any two adjacent breaker poles are connected to Phases A and B respectively.

2.15.2.2 Arc-Fault Circuit-Interrupters

UL 489, UL 1699 and NFPA 70. Molded case circuit breaker shall be rated as indicated. Two pole arc-fault circuit-interrupters shall be rated 220 volts. The provision of (two) one pole circuit breakers for shared neutral circuits in lieu of (one) two pole circuit breaker is unacceptable. Provide with "push-to-test" button.

2.16 ENCLOSED CIRCUIT BREAKERS

UL 489. Individual molded case circuit breakers with voltage and continuous current ratings, number of poles, overload trip setting, and short circuit current interrupting rating as indicated.

2.17 MOTOR SHORT-CIRCUIT PROTECTOR (MSCP)

Motor short-circuit protectors, also called motor circuit protectors (MCPs); shall conform to UL 508 and UL 489 and shall be provided as shown. MSCPs shall consist of an adjustable instantaneous trip circuit breaker used only in conjunction with a combination motor controller which provides coordinated motor branch-circuit overload and short-circuit protection. MSCPs shall be rated in accordance with the requirements of NFPA 70.

2.18 TRANSFORMERS

NEMA ST 20, general purpose, dry-type, self-cooled, ventilated. Provide transformers in NEMA 1 enclosure. Transformer shall have 220 degrees C insulation system for transformers 15 kVA and greater, and shall have 180 degrees C insulation for transformers rated 10 kVA and less, with temperature rise not exceeding120 degrees C under full-rated load in maximum ambient of 40 degrees C. Transformer of 120 degrees C temperature rise shall be capable of carrying continuously 100 percent of nameplate kVA without exceeding insulation rating.

2.18.1 Specified Transformer Efficiency

Transformers, indicated and specified with: 480V primary, 80 degrees C or 115 degrees C temperature rise, kVA ratings of 37.5 to 100 for single phase or 30 to 500 for three phase, shall be energy efficient type. Minimum efficiency, based on factory test results, shall not be less than NEMA Class 1 efficiency as defined by NEMA TP 1.

2.18.2 Transformers With Non-Linear Loads

Transformer insulation shall be a UL recognized 220 degrees C system. Neither the primary nor the secondary temperature shall exceed 220 degrees C at any point in the coils while carrying their full rating of non-sinusoidal load. Transformers are to be UL listed and labeled in accordance with UL 1561. Transformers evaluated by the UL K-Factor evaluation shall be listed for 115 degrees C average temperature rise only. Transformers with K-Factor ratings with temperature rise of 150 degrees C rise shall not be acceptable. K-Factor rated transformers shall have an impedance range of 3 percent to 5 percent, and shall have a minimum reactance of 2 percent to prevent excessive neutral current when supplying loads with large amounts of third harmonic.

]2.19 MOTORS

NEMA MG 1; hermetic-type sealed motor compressors shall also comply with UL 984. Provide the size in terms of kW, or kVA, or full-load current, or a combination of these characteristics, and other characteristics, of each motor as indicated or specified. Determine specific motor characteristics to ensure provision of correctly sized starters and overload heaters. Motors for operation on 208-volt, 3-phase circuits shall have terminal voltage rating of 200 volts, and those for operation on 480-volt, 3-phase circuits shall have terminal voltage rating of 460 volts. Motors shall be designed to operate at full capacity with voltage variation of plus or minus 10 percent of motor voltage rating. Unless otherwise indicated, motors rated 745 Watts (1 HP) and above shall be continuous duty type.

Where fuse protection is specifically recommended by the equipment manufacturer, provide fused switches in lieu of non-fused switches indicated.

2.19.1 High Efficiency Single-Phase Motors

Single-phase fractional-horsepower alternating-current motors shall be high efficiency types corresponding to the applications listed in NEMA MG 11. In exception, for motor-driven equipment with a minimum seasonal or overall efficiency rating, such as a SEER rating, provide equipment with motor to meet the overall system rating indicated.

2.19.2 Premium Efficiency Polyphase Motors

Polyphase motors shall be selected based on high efficiency characteristics relative to typical characteristics and applications as listed in NEMA MG 10. In addition, continuous rated, polyphase squirrel-cage medium induction motors shall meet the requirements for premium efficiency electric motors in accordance with NEMA MG 1, including the NEMA full load efficiency ratings. In exception, for motor-driven equipment with a minimum seasonal or overall efficiency rating, such as a SEER rating, provide equipment with motor to meet the overall system rating indicated.

2.19.3 Motor Sizes

Provide size for duty to be performed, not exceeding the full-load nameplate current rating when driven equipment is operated at specified capacity under most severe conditions likely to be encountered. When motor size provided differs from size indicated or specified, make adjustments to wiring, disconnect devices, and branch circuit protection to accommodate

equipment actually provided. Provide controllers for motors rated 1-hp and above with electronic phase-voltage monitors designed to protect motors from phase-loss, undervoltage, and overvoltage. Provide protection for motors from immediate restart by a time adjustable restart relay.

2.19.4 Wiring and Conduit

Provide internal wiring for components of packaged equipment as an integral part of the equipment. Provide power wiring and conduit for field-installed equipment, and motor control equipment forming part of motor control centers or switchgear assemblies, the conduit and wiring connecting such centers, assemblies, or other power sources to equipment as specified herein. Power wiring and conduit shall conform to the requirements specified herein. Control wiring shall be provided under, and conform to the requirements of the section specifying the associated equipment.

2.20 MOTOR CONTROLLERS

UL 508, NEMA ICS 1, and NEMA ICS 2. Controllers shall have thermal overload protection in each phase and shall have one spare normally open and one spare normally closed auxiliary contact. Provide controllers for motors rated 1-hp and above with electronic phase-voltage monitors designed to protect motors from phase-loss, undervoltage, and overvoltage. Provide protection for motors from immediate restart by a time adjustable restart relay. Magnetic-type motor controllers shall have undervoltage protection when used with momentary-contact pushbutton stations or switches and shall have undervoltage release when used with maintained-contact pushbutton stations or switches. When used with pressure, float, or similar automatic-type or maintained-contact switch, controller shall have hand/off/automatic selector switch. Connections to selector switch shall be such that only normal automatic regulatory control devices are bypassed when switch is in "hand" position. Safety control devices, such as low and high pressure cutouts, high temperature cutouts, and motor overload protective devices, shall be connected in motor control circuit in "hand" and "automatic" positions. Control circuit connections to hand/off/automatic selector switch or to more than one automatic regulatory control device shall be made in accordance with indicated or manufacturer's approved wiring diagram. Selector switch shall have means for locking in any position. For each motor not in sight of controller or where controller disconnecting means is not in sight of motor location and driven machinery location, controller disconnecting means shall be capable of being locked in open position. As an alternative, provide a manually operated, lockable, nonfused switch which disconnects motor from supply source within sight of motor. Overload protective devices shall provide adequate protection to motor windings; be thermal inverse-time-limit type; and include manual reset-type pushbutton on outside of motor controller case. Cover of combination motor controller and manual switch or circuit breaker shall be interlocked with operating handle of switch or circuit breaker so that cover cannot be opened unless handle of switch or circuit breaker is in "off" position.

2.20.1 Control Wiring

All control wire shall be stranded tinned copper switchboard wire with 600-volt flame-retardant insulation Type SIS meeting UL 44, or Type MTW meeting UL 1063, and shall pass the VW-1 flame tests included in those standards. Hinge wire shall have Class K stranding. Current transformer secondary leads shall be not smaller than No. 10 AWG. The minimum size of

control wire shall be No. 14 AWG. Power wiring for 480-volt circuits and below shall be of the same type as control wiring and the minimum size shall be No. 12 AWG. Special attention shall be given to wiring and terminal arrangement on the terminal blocks to permit the individual conductors of each external cable to be terminated on adjacent terminal points.

2.20.2 Control Circuit Terminal Blocks

NEMA ICS 4. Control circuit terminal blocks for control wiring shall be molded or fabricated type with barriers, rated not less than 600 volts. The terminals shall be removable binding, fillister or washer head screw type, or of the stud type with contact and locking nuts. The terminals shall be not less than No. 10 in size and shall have sufficient length and space for connecting at least two indented terminals for 10 AWG conductors to each terminal. The terminal arrangement shall be subject to the approval of the Contracting Officer and not less than four (4) spare terminals or 10 percent, whichever is greater, shall be provided on each block or group of blocks. Modular, pull apart, terminal blocks will be acceptable provided they are of the channel or rail-mounted type. The Contractor shall submit data showing that the proposed alternate will accommodate the specified number of wires, are of adequate current-carrying capacity, and are constructed to assure positive contact between current-carrying parts.

2.20.2.1 Types of Terminal Blocks

a. Short-Circuiting Type: Short-circuiting type terminal blocks shall be furnished for all current transformer secondary leads and shall have provision for shorting together all leads from each current transformer without first opening any circuit. Terminal blocks shall meet the requirements of paragraph CONTROL CIRCUIT TERMINAL BLOCKS above.

b. Load Type: Load terminal blocks rated not less than 600 volts and of adequate capacity shall be provided for the conductors for NEMA Size 3 and smaller motor controllers and for other power circuits, except those for feeder tap units. The terminals shall be of either the stud type with contact nuts and locking nuts or of the removable screw type, having length and space for at least two indented terminals of the size required on the conductors to be terminated. For conductors rated more than 50 amperes, screws shall have hexagonal heads. Conducting parts between connected terminals shall have adequate contact surface and cross-section to operate without overheating. Each connected terminal shall have the circuit designation or wire number placed on or near the terminal in permanent contrasting color.

2.20.3 Control Circuits

Control circuits shall have maximum voltage of 220 volts derived from control transformer in same enclosure. Transformers shall conform to UL 506, as applicable. Transformers, other than transformers in bridge circuits, shall have primaries wound for voltage available and secondaries wound for correct control circuit voltage. Size transformers so that 80 percent of rated capacity equals connected load. Provide disconnect switch on primary side.

2.20.4 Enclosures for Motor Controllers

NEMA ICS 6.

2.20.5 Multiple-Speed Motor Controllers and Reversible Motor Controllers

Across-the-line-type, electrically and mechanically interlocked. Multiple-speed controllers shall have compelling relays and shall be multiple-button, station-type with pilot lights for each speed.

2.20.6 Pushbutton Stations

Provide with "start/stop" momentary contacts having one normally open and one normally closed set of contacts, and red lights to indicate when motor is running. Stations shall be heavy duty, oil-tight design.

2.20.7 Pilot and Indicating Lights

Provide LED cluster lamps.

2.21 LOCKOUT REQUIREMENTS

Provide disconnecting means capable of being locked out for machines and other equipment to prevent unexpected startup or release of stored energy in accordance with 29 CFR 1910.147. Mechanical isolation of machines and other equipment shall be in accordance with requirements of Division 15, "Mechanical."

2.22 TELECOMMUNICATIONS SYSTEM

Provide system of telecommunications wire-supporting structures (pathway), including: outlet boxes, conduits with pull wires wireways, cable trays, and other accessories for telecommunications outlets and pathway in accordance with EIA TIA/EIA-569-A and as specified herein. Additional telecommunications requirements are specified in Section 16710, BUILDING TELECOMMUNICATIONS CABLING SYSTEM.

2.23 GROUNDING AND BONDING EQUIPMENT

2.23.1 Ground Rods

UL 467. Ground rods shall be copper-clad steel, with minimum diameter of 20 mm and minimum length of 3m.

2.23.2 Ground Bus

A copper ground bus shall be provided in the electrical equipment rooms as indicated.

2.24 MANUFACTURER'S NAMEPLATE

Each item of equipment shall have a nameplate bearing the manufacturer's name, address, model number, and serial number securely affixed in a conspicuous place; the nameplate of the distributing agent will not be acceptable.

2.25 FIELD FABRICATED NAMEPLATES

ASTM D 709. Provide laminated plastic nameplates for each equipment

enclosure, relay, switch, and device; as specified or as indicated on the drawings. Each nameplate inscription shall identify the function and, when applicable, the position. Nameplates shall be melamine plastic, 3 mm (0.125 inch) thick, white with black center core. Surface shall be matte finish. Corners shall be square. Accurately align lettering and engrave into the core. Minimum size of nameplates shall be 25 by 65 mm (one by 2.5 inches). Lettering shall be a minimum of 6.35 mm (0.25 inch) high normal block style.

2.26 WARNING SIGNS

Provide warning signs for flash protection in accordance with NFPA 70E and NEMA Z535.4 for switchboards, panelboards, industrial control panels, and motor control centers that are in other than dwelling occupancies and are likely to require examination, adjustment, servicing, or maintenance while energized. Provide field installed signs to warn qualified persons of potential electric arc flash hazards when warning signs are not provided by the manufacturer. The marking shall be clearly visible to qualified persons before examination, adjustment, servicing, or maintenance of the equipment.

2.27 WIREWAYS

UL 870. Material shall be steel galvanized 16 gauge for heights and depths up to 150 by 150 mm (6 by 6 inches), and 14 gauge for heights and depths up to 305 by 305 mm (12 by 12 inches). Provide in length required for the application with hinged-cover NEMA 1 enclosure per NEMA ICS 6.

2.28 SURGE PROTECTIVE DEVICES

Provide parallel type surge protective devices which comply with UL 1449 at the service entrance. Provide surge protectors in a NEMA 1 enclosure per NEMA ICS 6. Provide the following modes of protection:

FOR SINGLE PHASE AND THREE PHASE WYE CONNECTED SYSTEMS-
- Each phase to neutral (L-N)
- Neutral to ground (N-G)
- Phase to ground (L-G)

FOR DELTA CONNECTIONS-
- Phase to phase (L-L)
- Phase to ground (L-G)

Surge protective devices at the service entrance shall have a minimum surge current rating of 80,000 amperes per mode minimum and downstream protectors shall be rated 40,000 amperes per mode minimum. The maximum line to neutral (L-N) Suppressed Voltage Rating (SVR) shall be:

500V for 120V, single phase system
500V for 120/240V, single phase system
500V for 208Y/120V, three phase system
900V for 480Y/277V, three phase system

The minimum MCOV (Maximum Continuous Operating Voltage) rating shall be:

150V for 120V, single phase system
300/150V for 120/240V, single phase system
300/150V for 208Y/120V, three phase system
600/320V for 480Y/277V, three phase system

EMI/RFI filtering shall be provided for each mode with the capability to attenuate high frequency noise. Minimum attenuation shall be 20db.

2.29 FACTORY APPLIED FINISH

Electrical equipment shall have factory-applied painting systems which shall, as a minimum, meet the requirements of NEMA 250 corrosion-resistance test and the additional requirements as specified herein. Interior and exterior steel surfaces of equipment enclosures shall be thoroughly cleaned and then receive a rust-inhibitive phosphatizing or equivalent treatment prior to painting. Exterior surfaces shall be free from holes, seams, dents, weld marks, loose scale or other imperfections. Interior surfaces shall receive not less than one coat of corrosion-resisting paint in accordance with the manufacturer's standard practice. Exterior surfaces shall be primed, filled where necessary, and given not less than two coats baked enamel with semigloss finish. Equipment located indoors shall be ANSI Light Gray, and equipment located outdoors shall be ANSI Light Gray. Provide manufacturer's coatings for touch-up work and as specified in paragraph FIELD APPLIED PAINTING.

2.30 SOURCE QUALITY CONTROL

2.30.1 Transformer Factory Tests

Submittal shall include routine NEMA ST 20 transformer test results on each transformer and also contain the results of NEMA "design" and "prototype" tests that were made on transformers electrically and mechanically equal to those specified.

2.31 COORDINATED POWER SYSTEM PROTECTION

Analyses shall be prepared as specified in Section 16475A, COORDINATED POWER SYSTEM PROTECTION.

PART 3 EXECUTION

3.1 INSTALLATION

Electrical installations shall conform to requirements of NFPA 70 and to requirements specified herein.

3.1.1 Underground Service

Underground service conductors and associated conduit shall be continuous from service entrance equipment to outdoor power system connection.

3.1.2 Service Entrance Identification

Service entrance disconnect devices, switches, and enclosures shall be labeled and identified as such.

3.1.2.1 Labels

Wherever work results in service entrance disconnect devices in more than one enclosure, as permitted by NFPA 70, each enclosure, new and existing, shall be labeled as one of several enclosures containing service entrance disconnect devices.

3.1.3 Wiring Methods

Provide insulated conductors installed in rigid steel conduit, IMC, rigid nonmetallic conduit, EMT, or Non-Metallic Tube (PVC) except where specifically indicated or specified otherwise or required by NFPA 70 to be installed otherwise. Grounding conductor shall be separate from electrical system neutral conductor. Provide insulated green equipment grounding conductor for circuit(s) installed in conduit and raceways. Minimum conduit size shall be 21 mm in diameter for low voltage lighting and power circuits. Vertical distribution in multiple story buildings shall be made with metal conduit in fire-rated shafts. Metal conduit shall extend through shafts for minimum distance of 150 mm. Conduit which penetrates fire-rated walls, fire-rated partitions, or fire-rated floors shall be firestopped in accordance with ASTM E 119, ASTM E 814, ASTM E 1399, and ASTM E 1966.

3.1.3.1 Restrictions Applicable to EMT

a. Use according to International Building Code requirements, ASTM standards.

3.1.3.2 Applicable to Nonmetallic Conduit

a. PVC Schedule 40
(1) Use according to International Building Code requirements, ASTM standards.

b. Electrical Nonmetallic Tubing
(1) Use according to International Building Code requirements, ASTM standards.

3.1.3.3 Applicable to Flexible Conduit

Use according to DIN, I.E.C., BS, or EN standards.

3.1.3.4 Service Entrance Conduit, Underground

PVC, Type-EPC 40, galvanized rigid steel or steel IMC.

3.1.4 Conduit Installation

Unless indicated otherwise, conceal conduit under floor slabs and within finished walls, ceilings, and floors. Keep conduit minimum 150 mm away from parallel runs of flues and steam or hot water pipes. Install conduit parallel with or at right angles to ceilings, walls, and structural members where located above accessible ceilings and where conduit will be visible after completion of project.

3.1.4.1 Conduit Installed Under Floor Slabs

Conduit run under floor slab shall be located a minimum of 305 mm below the vapor barrier. Seal around conduits at penetrations thru vapor barrier.

3.1.4.2 Conduit Through Floor Slabs

Where conduits rise through floor slabs, curved portion of bends shall not be visible above finished slab.

3.1.4.3 Conduit Support

Support conduit by pipe straps, wall brackets, hangers, or ceiling trapeze. Fasten by wood screws to wood; by toggle bolts on hollow masonry units; by concrete inserts or expansion bolts on concrete or brick; and by machine screws. Do not weld conduits or pipe straps to steel structures. Load applied to fasteners shall not exceed one-fourth proof test load or according to International Building Code requirements, ASTM standards.

3.1.4.4 Directional Changes in Conduit Runs

Make changes in direction of runs. Make field-made bends and offsets with hickey or conduit-bending machine. Do not install crushed or deformed conduits. Avoid trapped conduits. Prevent plaster, dirt, or trash from lodging in conduits, boxes, fittings, and equipment during construction. Free clogged conduits of obstructions.

3.1.4.5 Conduit Installed in Concrete Floor Slabs

Locate so as not to adversely affect structural strength of slabs. Install conduit within middle one-third of concrete slab. Space conduits horizontally not closer than three diameters, except at cabinet locations. Curved portions of bends shall not be visible above finish slab. Increase slab thickness as necessary to provide minimum 25 mm cover over conduit.

3.1.4.6 Locknuts and Bushings

Fasten conduits to sheet metal boxes and cabinets with two locknuts where required by NFPA 70.

Basis of Design: O-Z/Gedney, Steel City, or Appleton.

3.1.4.7 Flexible Connections

Provide flexible steel conduit between 915 and 1830 mm in length for recessed and semirecessed lighting fixtures; for equipment subject to vibration, noise transmission, or movement; and for motors. Install flexible conduit to allow 20 percent slack. Minimum flexible steel conduit size shall be 16 mm diameter. Provide liquidtight flexible nonmetallic conduit in wet and damp locations and in fire pump rooms for equipment subject to vibration, noise transmission, movement or motors. Provide separate ground conductor across flexible connections.

3.1.5 Boxes, Outlets, and Supports

3.1.5.1 Boxes

Boxes for use with raceway systems shall be according to DIN, I.E.C., BS, or EN standards.

3.1.5.2 Pull Boxes

Construct of at least minimum size required by NFPA 70, of code-gauge aluminum or nonmetallic raceway systems.

3.1.6 Mounting Heights

Mount panelboards, enclosed circuit breakers, motor controller and disconnecting switches so height of operating handle at its highest

position is maximum 1980 mm above floor. Mount lighting switches 1220 mm above finished floor, receptacles 460 mm above finished floor, and other devices as indicated. Measure mounting heights of wiring devices and outlets in non-hazardous areas to center of device or outlet.

3.1.7 Splices

Make splices in accessible locations, according to International Building Code requirements, ASTM standards.

3.1.8 Electrical Penetrations

Seal openings around electrical penetrations through fire resistance-rated walls, partitions, floors, or ceilings in accordance with ASTM E 119, ASTM E 814, ASTM E 1399, ASTM E 1966.

3.1.9 Grounding and Bonding

In accordance with NFPA 70 and NFPA 780. Ground exposed, non-current-carrying metallic parts of electrical equipment, metallic raceway systems, grounding conductor in metallic and nonmetallic raceways, telephone system grounds, grounding conductor of nonmetallic sheathed cables, and neutral conductor of wiring systems. Make ground connection at main service equipment, and extend grounding conductor to point of entrance of metallic water service. Make connection to water pipe by suitable ground clamp or lug connection to plugged tee. If flanged pipes are encountered, make connection with lug bolted to street side of flanged connection. Supplement metallic water service grounding system with additional made electrode in compliance with NFPA 70. Make ground connection to driven ground rods on exterior of building. Interconnect all grounding media in or on the structure to provide a common ground potential. This shall include lightning protection, electrical service, telephone system grounds, as well as underground metallic piping systems. Interconnection to the gas line shall be made on the customer's side of the meter.

3.1.9.1 Resistance

Maximum resistance-to-ground of grounding system shall not exceed 25 ohms under dry conditions. Where resistance obtained exceeds 25 ohms, contact Government for further instructions.

3.1.9.2 Telephone Service

Provide main telephone service equipment ground consisting of separate ground wire, The same size as the Class I lightning protection system main conductor or 16 square millimeters, whichever is larger, in conduit between equipment backboard and readily accessible grounding connection. Equipment end of ground wire shall consist of coiled length at least twice as long as terminal cabinet or backboard height.

3.1.10 Equipment Connections

Provide power wiring for the connection of motors and control equipment under this section of the specification. Except as otherwise specifically noted or specified, automatic control wiring, control devices, and protective devices within the control circuitry are not included in this section of the specifications but shall be provided under the section specifying the associated equipment.

3.2 TESTS, INSPECTIONS, AND VERIFICATIONS

3.2.1 Cable Data

Manufacture of the wire and cable shall not be started until all materials to be used in the fabrication of the finished wire or cable have been approved by the Government. Cable data shall be submitted for approval including dimensioned sketches showing cable construction, and sufficient additional data to show that these specifications will be satisfied.

3.2.2 Inspection and Tests

Inspection and tests of wire and cable furnished under these specifications shall be made by and at the plant of the manufacturer, and shall be witnessed by the Government or his authorized representative, unless waived in writing. The Government may perform further tests before or after installation. Testing in general shall comply with NEMA WC 70. Specific tests required for particular materials, components, and completed cables shall be as specified in the sections of the above standards applicable to those materials, components, and cable types. Tests shall also be performed in accordance with the additional requirements specified below.

3.2.2.1 High-Voltage Test Source

Where the applicable standards allow a choice, high-voltage tests for cables to be used exclusively on dc circuits shall be made with dc test voltages. Cables to be used exclusively on ac circuits shall be tested with ac test voltages. If both ac and dc will be present, on either the same or separate conductors of the cable, ac test voltages shall be used.

3.2.2.2 Independent Tests

The Government may at any time make visual inspections, continuity or resistance checks, insulation resistance readings, power factor tests, or dc high-potential tests at field test values. A cable's failure to pass these tests and inspections, or failure to produce readings consistent with acceptable values for the application, will be grounds for rejection of the cable.

3.2.2.3 Reports

Results of tests made shall be furnished. No wire or cable shall be shipped until authorized. Lot number and reel or coil number of wire and cable tested shall be indicated on the test reports.

3.3 FIELD QUALITY CONTROL

Furnish test equipment and personnel and submit written copies of test results. Give Government 5 working days notice prior to each test.

3.3.1 Ground-Fault Receptacle Test

Test ground-fault receptacles with a "load" (such as a plug in light) to verify that the "line" and "load" leads are not reversed.

3.3.2 Grounding System Test

Test grounding system to ensure continuity, and that resistance to ground

is not excessive. Test each ground rod for resistance to ground before making connections to rod; tie grounding system together and test for resistance to ground. Make resistance measurements in dry weather, not earlier than 48 hours after rainfall. Submit written results of each test to Government, and indicate location of rods as well as resistance and soil conditions at time measurements were made.

3.4 SCHEDULE

Some metric measurements in this section are based on mathematical conversion of inch-pound measurements, and not on metric measurement commonly agreed to by the manufacturers or other parties. The inch-pound and metric measurements are as follows:

PRODUCTS		INCH-POUND	METRIC
a. Conduit			
	- diameter	1/2 inches	16 mm
		3/4 inches	21 mm
		1 inch	27 mm
		1-1/4 inches	35 mm
		1-1/2 inches	41 mm
		2 inches	53 mm
		2-1/2 inches	63 mm
		3 inches	78 mm
		3-1/2 inches	91 mm
		4 inches	103 mm
		5 inches	129 mm
		6 inches	155 mm
b. Cable tray			
	- depth	3 inches	75 mm
		4 inches	100 mm
		6 inches	150 mm
	- width	12 inches	305 mm
		18 inches	455 mm
		24 inches	610 mm
		30 inches	760 mm
		36 inches	915 mm
c. Cabinets, junction and pull boxes			
	- volume 100 cubic inches 1640 mL		
d. Device plates			
- thickness 0.03 inches 0.792 mm			
e. Outlet boxes		2 by 4 by 1 1/2 inches	5 by 100 by 40 mm
		4 by 4 by 2 1/8 inch	100 by 100 by 54 mm
f. Plywood			
	- thickness 3/4 inch 19 mm		
	- size 4 by 8 feet 1220 by 2440 mm		
g. Ground rod			
	- diameter 3/4 inch 19 mm		
	- length 10 feet 3050 mm		
h. Wireways			
	- sizes	2 1/2 by 2 1/2 inches	63.5 by 63.5 mm
		4 by 4 inches	100 by 100 mm
		6 by 6 inches	150 by 150 mm
		8 by 8 inches	200 by 200 mm
		12 by 12 inches	305 by 305 mm

-- End of Section --

SECTION 16403

PANELBOARDS

PART 1 GENERAL

1.1 REFERENCES

The publications listed below form a part of this specification to the extent referenced. The publications are referred to in the text by basic designation only.

Unless noted otherwise, all material used shall be in compliance with the requirements of the applicable German (DIN) Standards. In the event DIN Standard material is unavailable, contractor may then select comparable British Standard (BS), or Underwriters Laboratories Inc. (UL) listed material. Equipment enclosure types shall be in compliance with the National Electrical Manufacturer's Association (NEMA) or the International Electro-Technical Committee (IEC) standards. Material and equipment installed under this contract shall be for the appropriate application.

ASTM INTERNATIONAL (ASTM)

ASTM B 187	(1994) Copper Bar, Bus Bar, Rod and Shapes

ASME INTERNATIONAL (ASME)

ASME B1.1	(1989) Unified Inch Screw Threads (UN and UNR Thread Form)
ASME B1.20.1	(1983; R 2001) Pipe Threads, General Purpose (Inch)

BRITISH STANDARDS INSTITUTION (BSI)

BS 5824	(1980) Specification for low voltage switchgear and controlgear for industrial use. Mounting rails. C-profile and accessories for the mounting of equipment
BS 5825	(1980) Specification for low voltage switchgear and controlgear for industrial use. Mounting rails. G-profile for the fixing of terminal blocks
BS EN 50300-2	(2004) Low-voltage switchgear and controlgear assemblies. General requirements for low-voltage substation cable distribution boards.
BS EN 60439-3	(Jun 1991) Low-voltage switchgear and controlgear assemblies; Part 3: Particular requirements for assemblies intended to be installed in places where unskilled persons have access to their use - Distribution boards

BS EN 60947-2	(2001, Ed. 2.2) Low-voltage switchgear and controlgear; Part 2. Circuit breaker
BS EN 62208	(2004) Empty enclosures for low-voltage switchgear and controlgear assemblies.

DUETSCHES INSTITUTE FUR NORMUNG (DIN)

DIN 60439	(1999) Low-voltage switchgear and controlgear assemblies.

INTERNATIONAL ELECTROTECHNICAL COMMISSION IEC)

IEC 60439	(1999) Low-voltage switchgear and controlgear assemblies.
IEC 60529	(2001-02, Ed. 2.1) Degrees of Protection Provided by Enclosures (IP Code)
IEC 60898-1	(2002, Ed. 1.0) Electrical accessories - Circuit Breakers for overcurrent protection for households and similar installations - Part 1: Circuit breakers for a.c. operation

NATIONAL ELECTRICAL MANUFACTURERS ASSOCIATION (NEMA)

NEMA AB 1	(1999) Molded Case Circuit Breakers and Molded Case Switches
NEMA PB 1	(1995) Panelboards

UNDERWRITERS LABORATORIES (UL)

UL 50	(1995; Rev thru Nov 1999) Enclosures for Electrical Equipment
UL 67	(1993; Rev thru Oct 1999) Panelboards
UL 489	((1996; Rev thru Mar 2000) Molded-Case Circuit Breakers, Molded-Case Switches, and Circuit-Breaker Enclosures

1.2 SYSTEM DESCRIPTION

These specifications include the design, fabrication, assembly, wiring, and delivery of the items of equipment and accessories and spare parts listed in the Schedule and shown on the drawings.

1.2.1 Coordination

The general arrangement of the panelboards is shown on the contract drawings. Any modifications of the equipment arrangement or device requirements as shown on the drawings shall be subject to the approval of the Government. If any conflicts occur necessitating departures from the drawings, details of and reasons for departures shall be submitted and approved prior to implementing any change. All equipment shall be completely assembled at the factory.

1.2.2 Standard Products

Material and equipment shall be standard products of a manufacturer regularly engaged in their manufacture and shall essentially duplicate items that have been in satisfactory use for at least 2 years prior to bid opening. All materials shall conform to the requirements of these specifications. Materials shall be of high quality, free from defects and imperfections, of recent manufacture, and of the classification and grades designated. All materials, supplies, and articles not manufactured by the Contractor shall be the products of other recognized reputable manufacturers. If the Contractor desires for any reason to deviate from the standards designated in these specifications, he shall, after award, submit a statement of the exact nature of the deviation, and shall submit, for the approval of the Government, complete specifications for the materials which he proposes to use.

1.2.3 Nameplates

Nameplates shall be made of laminated sheet plastic or of anodized aluminum to provide white letters on a black background. The nameplates shall be fastened to the panels in proper positions.

1.3 MATERIAL AUTHENTICATION DATA INCLUDED IN DESIGN ANALYSIS

Government approval is required for submittals with a "G" designation; submittals not having a "G" designation are for information only. When used, a designation following the "G" designation identifies the office that will review the submittal for the Government. The following shall be submitted in accordance with Section 01330 SUBMITTAL PROCEDURES:

SD-02 Shop Drawings

Panelboards

The Contractor shall, within 30 calendar days after date of receipt by him of notice of award, submit for the approval of the Government six (6) copies of outline drawings of all equipment to be furnished under this contract, together with weights and overall dimensions. Drawings shall show the general arrangement and overall dimensions of the motor control centers, switchboards, and panelboards. These drawings shall show space requirements, details of any floor supports to be embedded in concrete and provisions for conduits for external cables.

The Contractor shall, within 30 calendar days after date of receipt by him of notice of award, submit for the approval of the Government six (6) copies of electrical equipment drawings. A single-line diagram, equipment list and nameplate schedule shall be provided for each switchboard and panelboard.

SD-03 Product Data

Panelboards

The Contractor shall within 30 calendar days after date of receipt by him of notice of award submit for approval six (6) copies of such descriptive cuts and information as are required to demonstrate fully that all parts of the equipment will conform to

the requirements and intent of the specifications. Data shall include descriptive data showing typical construction of the types of equipment proposed, including the manufacturer's name, type of molded case circuit breakers or motor circuit protectors, performance capacities and other information pertaining to the equipment.

1.4 MAINTENANCE

1.4.1 Spare Parts

Spare parts shall be furnished as specified below. All spare parts shall be of the same material and workmanship, shall meet the same requirements, and shall be interchangeable with the corresponding original parts furnished.

a. 2 each - Fuses of each type and size.

PART 2 PRODUCTS

2.1 General Standards

BS EN 50300-2 for general requirement for L.V. substation cable distribution boards.

BS EN 60947-2 for ancillary equipment.

BS EN 60439-3, DIN 60439 and IEC 60439 for L.V. switchgear intended to be installed in places where unskilled persons have access to their use.

BS 5824 and BS 5825 for L.V. switchgear industrial use.

2.2 CONNECTIONS

All bolts, studs, machine screws, nuts, and tapped holes shall be in accordance with ASME B1.1. The sizes and threads of all conduit and fittings, tubing and fittings, and connecting equipment shall be in accordance with ASME B1.20.1.

2.3 CIRCUIT BREAKERS

Circuit breakers shall conform to the applicable requirements of NEMA AB 1, UL 489, or DIN, IEC 60898-1 , or BS EN 60947-2, standards. The circuit breakers shall be manually-operated, shall be quick-make, quick-break, common trip type, and shall be of automatic-trip type unless otherwise specified or indicated on the drawings. All poles of each breaker shall be operated simultaneously by means of a common handle. The operating handles shall clearly indicate whether the breakers are in "On," "Off," or "Tripped" position and shall have provisions for padlocking in the "Off" position. Personnel safety line terminal shields shall be provided for each breaker. The circuit breakers shall be products of only one manufacturer, and shall be interchangeable when of the same frame size.

2.3.1 Trip Units

Except as otherwise noted, the circuit breakers, of frame sizes and the trip unit ratings as shown on the drawings, shall be provided with combination thermal and instantaneous magnetic trip units. Nonadjustable instantaneous magnetic trip units shall be set at approximately 10 times

the continuous current ratings of the circuit breakers.

2.4 PANELBOARDS

Panelboards shall consist of assemblies of molded-case circuit breakers for the main breaker only and miniature circuit breakers with buses and terminal lugs for the control and protection of branch circuits to motors, heating devices and other equipment operating at 380 volts ac or less. Panelboards shall be UL 67, BS EN 60439-3, DIN 60439 or IEC 60439 labeled. Panelboards shall be designed for installation in surface-mounted or flush-mounted cabinets accessible from the front only, as shown on the drawings.

2.4.1 Enclosure

Enclosures shall meet the requirements of BS EN 62208, UL 50, IEC 60529. All cabinets shall be fabricated from sheet steel. Cabinets shall be painted in accordance with paragraph PAINTING. Enclosures shall meet NEMA 3R (IP 41) or higher for outdoor and NEMA Type 1 (IP 10) or higher for indoor application.

2.4.2 Buses

All panelboards shall be of the dead-front type with buses and circuit breakers mounted on a plate or base for installation as a unit in a cabinet. All buses shall be of copper. Copper bars and shapes for bus conductors shall conform to the applicable requirements of ASTM B 187. The sizes of buses and the details of panelboard construction shall meet or exceed the requirements of NEMA PB 1, or BS EN 60947-2.

2.4.3 Components

Each branch circuit, and the main buses where so specified or shown on the drawings, shall be equipped with molded-case circuit breakers having overcurrent trip ratings as shown on the drawings. The circuit breakers shall be of a type designed for bolted connection to buses in a panelboard assembly, and shall meet the requirements of paragraph CIRCUIT BREAKERS. Circuit breakers of the same frame size and rating shall be interchangeable.

2.5 MOTOR CONTROL

2.5.1 Motor Starters

Motor starters shall be provided of sizes, ratings and NEMA or equivalent type as required for motors provided and in accordance with BS EN 60947-4-1: 2001.

2.5.1.1 Manual Motor Starter

Provide single-phase, fractional HP manual motor controllers as required. Equip with manaully operated quick-make, quick-break toggle mechanisms; and with one-piece melting alloy type thermal units. Controller to become inoperative when thermal unit is removed. Enclose controller unit in NEMA Box Type as required for surface mounting. Controller shall be suitable for mounting in standard switch box and installed flush in finished room environments. Coat with manufacturer's standard color finish.

2.5.1.2 Full Voltage Starter

Provide full-voltage non-reversing (FVNR), alternating-current combination starters consisting of controller, fused 220V control transformer, push buttons, selector switches, and indicating lights, mounted in common enclosure, as required. Equip controller with electrical interlocks as indicated. Provide controller with two normally open and two normally closed spare auxiliary contacts. Equip controller with block type manual external reset three-phase overload relay. Construct and mount controller and disconnect mechanism in manufacturer's standard color finish.

2.5.1.3 Combination Disconnect and Full Voltage Starter

Provide starter as specified for stand-alone full voltage nn-reversing starter, and provide with nonfused disconnect switch mounted in common enclosure. Provide operating handle for disconnect mechanism with indication of control switch position, with enclosure door either opened or closed.

2.6 PAINTING

Interior and exterior steel surfaces of equipment enclosures shall be thoroughly cleaned and then receive a rust-inhibitive phosphatizing or equivalent treatment prior to painting. Exterior surfaces shall be free from holes, seams, dents, weld marks, loose scale or other imperfections. Interior surfaces shall receive not less than one coat of corrosion-resisting paint in accordance with the manufacturer's standard practice. Exterior surfaces shall be primed, filled where necessary, and given not less than two coats baked enamel with semigloss finish. Equipment located indoors shall be Light Gray, and equipment located outdoors shall be Light Grey or Dark Gray, or according to International Building Code requirements and ASTM standards . All touch-up work shall be done with manufacturer's coatings as supplied under paragraph SPARE PARTS.

PART 3 EXECUTION (Not Applicable)

-- End of Section --

SECTION 16410

AUTOMATIC TRANSFER SWITCHES

PART 1 GENERAL

1.1 REFERENCES

The publications listed below form a part of this specification to the extent referenced. The publications are referred to within the text by the basic designation only.

Unless noted otherwise, all material used shall be in compliance with the requirements of the applicable German (DIN) Standards. In the event DIN Standard material is unavailable, contractor may then select comparable British Standard (BS), or Underwriters Laboratories Inc. (UL) listed material. Equipment enclosure types shall be in compliance with the National Electrical Manufacturer's Association (NEMA) or the International Electro-Technical Committee (IEC) standards. Material and equipment installed under this contract shall be for the appropriate application.

INTERNATIONAL ELECTRICAL TESTING ASSOCIATION (NETA)

NETA ATS	(2003) Acceptance Testing Specifications

NATIONAL FIRE PROTECTION ASSOCIATION (NFPA)

NFPA 70	(2005) National Electrical Code

UNDERWRITERS LABORATORIES (UL)

UL 1008	(1996; Rev thru Jan 2002) Transfer Switch Equipment
UL 508	(1999; R 2002, Bul. 2001, 2002, 2003) Industrial Control Equipment

1.2 MATERIAL AUTHENTICATION DATA INCLUDED IN DESIGN ANALYSIS

The following is submitted in accordance with Section 01335 SUBMITTAL PROCEDURES FOR DESIGN/BUILD PROJECT. It is included in the Design Analysis for this project.

SD-02 Shop Drawings

Automatic Transfer Switch Drawings

SD-03 Product Data

Automatic Transfer Switches

1.3 SUBMITTALS

The following shall be submitted in accordance with Section 01335 SUBMITTAL PROCEDURES for design built project:

SD-06 Test Reports

Acceptance Checks and Tests

Functional Acceptance Tests

SD-07 Certificates

Proof of Listing

SD-10 Operation and Maintenance Data

Automatic Transfer Switches

1.4 QUALITY ASSURANCE

1.4.1 Proof of Listing

Submit proof of listing by UL 1008.

1.4.2 Automatic Transfer Switch Drawings

Drawings shall include outline, arrangement, and detail drawings. Detail drawings shall include manufacturer's name and catalog number, electrical ratings, total system transfer statement, reduced normal supply voltage at which transfer to the alternate supply is initiated, transfer delay times, short-circuit current rating, wiring diagram, description of interconnections, testing instructions, acceptable conductor type for terminals, tightening torque for each wire connector, and other required UL 1008 markings.

PART 2 PRODUCTS

2.1 AUTOMATIC TRANSFER SWITCHES

Provide three-pole, automatic transfer switches for use in emergency and/or critical systems in accordance with UL 1008. Each automatic transfer switch shall be rated for total system transfer and have the current and voltage ratings as indicated. The rating of the switch shall be adequate for withstanding the effects of the indicated RMS symmetrical fault current when protected by the indicated overcurrent device without contact welding. The switch operating mechanism shall be electrically operated from the source to which it is transferring, shall have quick-make, quick-break, load break contacts, and shall be mechanically held in both positions. Switches utilizing circuit breakers are not acceptable. Non-fire pump service transfer switches shall have manual operating means provided for maintenance and servicing accessible only by opening the enclosure. An internal Manuel handle will be provided for non-loadbreak operation. The switch enclosure shall comply with UL 508, NEMA Type 1, and shall be equipped with an equipment ground lug.

2.1.1 Controls for Utility-Generator Automatic Transfer Switch

Provide all necessary controls to start the generator set upon loss of the normal (utility) source, transfer the load to the generator set upon reaching rated voltage and frequency, re-transfer the load when the normal (utility) source returns, and stop the generator set.

The switch shall include the following control features.

a. Three-phase normal source voltage sensing circuit with adjustable dropout, 75-93 percent of nominal, and pickup, 85-100 percent of nominal.

b. Engine starting control contacts with adjustable commit-to-start delay circuit, 0.5-6.0 seconds.

c. Voltage/frequency sensing circuit, set for 80 percent of nominal, for enabling load transfer to emergency source.

d. Transfer to emergency source time delay for transfer switches as indicated, adjustable 0-5 minutes.

e. Re-transfer to normal source time delay, adjustable 1-30 minutes.

f. Programmable exerciser to allow automatic starting of the generator set and subsequent load transfer. Exercise periods shall be selectable for 1 to 24 hours per day for 0 to 7 days a week.

g. Adjustable time delay transition or in-phase monitor feature for indicated transfer switches to allow safe transfer of highly inductive loads between two non-synchronized sources.

PART 3 EXECUTION

3.1 INSTALLATION

Installation shall conform to the requirements of NFPA 70 and manufacturer's recommendation.

3.2 PREREQUISITES FOR FUNCTIONAL ACCEPTANCE TESTING

Completion of the following requirements is mandatory prior to scheduling functional acceptance tests for the automatic transfer switch.

3.2.1 Manufacturers O&M Information

The manufacturers O&M information required by the paragraph entitled "SD-10 Operation and Maintenance Data", shall have been submitted to and approved by the Contracting Officer.

3.2.2 Test Equipment

All test equipment and instruments shall be on hand prior to scheduling field tests, or subject to Contracting Officer's approval, evidence shall be provided to show that arrangements have been made to have the necessary equipment and instruments on site prior to field testing.

3.3 FIELD QUALITY CONTROL

Give Contracting Officer 15 days notice of dates and times scheduled for tests which require the presence of the Contracting Officer. The Contracting Officer will coordinate with the using activity and schedule a time that will eliminate or minimize interruptions and interference with the activity operations. The contractor shall be responsible for costs associated with conducting tests outside of normal working hours and with incorporating special arrangements and procedures, including temporary power conditions. The contractor shall provide labor, equipment,

apparatus, including test load, and consumables required for the specified tests. Calibration of all measuring devices and indicating devices shall be certified. The test load shall be a cataloged product in accordance with Section 16050 BASIC ELECTRICAL MATERIALS AND METHODS. Perform the following field tests in accordance with the manufacturer's recommendations and include the following visual and mechanical inspections and electrical tests, performed in accordance with NETA ATS.

3.3.1 Automatic Transfer Switch Acceptance Checks and Tests

a. Visual and Mechanical Inspection

1. Compare equipment nameplate data with specifications and approved shop drawings.

2. Inspect physical and mechanical condition.

3. Confirm correct application of manufacturer's recommended lubricants.

4. Verify that manual transfer warnings are attached and visible.

5. Verify tightness of all control connections.

6. Verify tightness of accessible bolted connections by calibrated torque-wrench method. Thermographic survey is not required.

7. Perform manual transfer operation.

8. Verify positive mechanical interlocking between normal and alternate sources.

b. Electrical Tests

1. Measure contact-resistance.

2. Perform insulation-resistance on each pole, phase-to-phase and phase-to-ground with switch closed, and across each open pole for one minute. Perform tests in both source positions.

3. Verify settings and operations of control devices.

4. Calibrate and set all relays and timers.

3.3.2 Functional Acceptance Tests

Functional Acceptance Tests shall include simulating power failure and demonstrating the following operations for each automatic transfer switch. Contractor shall show by demonstration in service that the automatic transfer switches are in good operating condition, and function not less than five times.

a. Perform automatic transfer tests:

1. Simulate loss of normal/preferred power.

2. Return to normal/preferred power.

3. Simulate loss of emergency power.

4. Simulate all forms of single-phase conditions.

b. Verify correct operation and timing of the following functions:

1. Normal source voltage-sensing relays.

2. Engine start sequence.

3. Time delay upon transfer.

4. Alternate source voltage-sensing relays.

5. Automatic transfer operation.

6. Interlocks and limit switch function.

7. Time delay and retransfer upon normal power restoration.

-- End of Section --

SECTION 16442

SWITCHBOARDS AND SWITCHGEAR

PART 1 GENERAL

1.1 REFERENCES

The publications listed below form a part of this specification to the extent referenced. The publications are referred to within the text by the basic designation only.

Unless noted otherwise, all material used shall be in compliance with the requirements of the applicable German (DIN) Standards. In the event DIN Standard material is unavailable, contractor may then select comparable British Standard (BS), or Underwriters Laboratories Inc. (UL) listed material. Equipment enclosure types shall be in compliance with the National Electrical Manufacturer's Association (NEMA) or the International Electro-Technical Committee (IEC) standards. Material and equipment installed under this contract shall be for the appropriate application.

AMERICAN NATIONAL STANDARDS INSTITUTE (ANSI)

ANSI C39.1	(1981; R 1992) Requirements for Electrical Analog Indicating Instruments

ASTM INTERNATIONAL (ASTM)

ASTM A 123/A 123M	(2001) Zinc (Hot-Dip Galvanized) Coatings on Iron and Steel Products
ASTM A 153/A 153M	(2001) Zinc Coating (Hot-Dip) on Iron and Steel Hardware
ASTM A 167	(1999) Stainless and Heat-Resisting Chromium-Nickel Steel Plate, Sheet, and Strip
ASTM A 653/A 653M	(2001a) Steel Sheet, Zinc-Coated (Galvanized) or Zinc-Iron Alloy-Coated (Galvannealed) by the Hot-Dip Process
ASTM A 780	(2001) Repair of Damaged and Uncoated Areas of Hot-Dipped Galvanized Coatings
ASTM D 149	(1997a) Dielectric Breakdown Voltage and Dielectric Strength of Solid Electrical Insulating Materials at Commercial Power Frequencies
ASTM D 1535	(2001) Specifying Color by the Munsell System

INSTITUTE OF ELECTRICAL AND ELECTRONICS ENGINEERS (IEEE)

IEEE C12.15	(1990) Solid-State Demand Registers for

	Electromechanical Watthour Meters
IEEE C12.16	(1991) Solid-State Electricity Meters
IEEE C2	(2002) National Electrical Safety Code
IEEE C37.13	(1990; R 1995) Low-Voltage AC Power Circuit Breakers Used in Enclosures
IEEE C37.20.1	(1993) Metal-Enclosed Low-Voltage Power Circuit-Breaker Switchgear
IEEE C37.20.2	(1999) Standard for Metal-clad switchgear
IEEE C37.90.1	(2002) Surge Withstand Capability (SWC) Tests for Relays and Relay Systems Associated with Electric Power Apparatus
IEEE C57.13	(1993) Instrument Transformers

INTERNATIONAL ELECTRICAL TESTING ASSOCIATION (NETA)

NETA ATS	(2003) Acceptance Testing Specifications

NATIONAL ELECTRICAL MANUFACTURERS ASSOCIATION (NEMA)

NEMA C12.1	(2001) Code for Electricity Metering
NEMA C57.12.28	(1999) Pad-Mounted Equipment - Enclosure Integrity
NEMA LI 1	(1998) Industrial Laminated Thermosetting Products
NEMA PB 2	(1995) Deadfront Distribution Switchboards
NEMA PB 2.1	(2002) General Instructions for Proper Handling, Installation, Operation and Maintenance of Deadfront Distribution Switchboards Rated 600 Volts or Less
NEMA ST 20	(1992; R 1997) Dry-Type Transformers for General Applications

NATIONAL FIRE PROTECTION ASSOCIATION (NFPA)

NFPA 70	(2005) National Electrical Code

UNDERWRITERS LABORATORIES (UL)

UL 1558	(1999) Metal-Enclosed Low-Voltage Power Circuit Breaker Switchgear
UL 198C	(1986; Rev thru Feb 1998)High-Interrupting-Capacity Fuses, Current-Limiting Types
UL 467	(1993; R 2001) Grounding and Bonding Equipment

UL 489	((1996; Rev thru Mar 2000) Molded-Case Circuit Breakers, Molded-Case Switches, and Circuit-Breaker Enclosures
UL 891	(1998; Rev thru Feb 2003) Dead-Front Switchboards

1.2 MATERIAL AUTHENTICATION DATA INCLUDED IN DESIGN ANALYSIS

The following is submitted in accordance with Section 01335 SUBMITTAL PROCEDURES FOR DESIGN/BUILD PROJECT. It is included in the Design Analysis for this project.

SD-03 Product Data

Switchboard and Switchgear

1.3 SUBMITTALS

The following shall be submitted in accordance with Section 01335 SUBMITTAL PROCEDURES for design built project:

SD-06 Test Reports

Switchboard and Switchgear design tests

Switchboard and Switchgear production tests

Acceptance checks and tests

SD-10 Operation and Maintenance Data

Switchboard and Switchgear Operation and Maintenance

1.4 QUALITY ASSURANCE

1.4.1 Switchboard and Switchgear Product Data

Each submittal shall include manufacturer's information for each component, device and accessory provided with the switchboard and switchgear including:

a. Circuit breaker type, interrupting rating, and trip devices, including available settings

b. Manufacturer's instruction manuals and published time-current curves (on full size logarithmic paper) of the main secondary breaker and largest secondary feeder device.

1.4.2 Switchboard and Switchgear Drawings

Drawings shall include, but are not limited to the following:

a. One-line diagram including breakers, fuses, current transformers, and meters.

b. Outline drawings including front elevation, section views, footprint, and overall dimensions .

c. Bus configuration including dimensions and ampere ratings of bus bars.

d. Markings and NEMA nameplate data, including fuse information (manufacturer's name, catalog number, and ratings).

e. Circuit breaker type, interrupting rating, and trip devices, including available settings .

f. Three-line diagrams and elementary diagrams and wiring diagrams with terminals identified, and indicating prewired interconnections between items of equipment and the interconnection between the items.

g. Manufacturer's instruction manuals and published time-current curves (on full size logarithmic paper) of the main secondary breaker and largest secondary feeder device. These shall be used by the designer of record to provide breaker settings that will ensure protection and coordination are achieved.

h. Provisions for future extension.

1.5 MAINTENANCE

1.5.1 Switchboard and Switchgear Operation and Maintenance Data

Submit Operation and Maintenance Manuals in accordance with Section 01781, "Operation and Maintenance Data."

PART 2 PRODUCTS

2.1 PRODUCT COORDINATION

Products and materials not considered to be switchboards or switchgear and related accessories are specified in other sections.

2.2 SWITCHBOARD AND SWITCHGEAR

NEMA PB 2 and UL 891 and IEEE C37.20.1 and UL 1558.

2.2.1 Ratings

The voltage rating of the switchboard and switchgear shall be 15 kv 500 MVA rated, 1200A main bus switchgear. The continuous current rating of the main bus shall be as indicated. The short-circuit current rating shall be as indicated. The switchboard and switchgear shall be UL listed.

2.2.2 Construction

Switchboard and Switchgear shall consist of vertical sections bolted together to form a rigid assembly and shall be front and rear aligned . All circuit breakers shall be front accessible. Front and rear aligned switchboards shall have rear accessible load connections. Compartmentalized switchboards and switchgear shall have vertical insulating barriers between the front device section, the main bus section, and the cable compartment with full front to rear vertical insulating barriers between adjacent sections. Where indicated, "space for future" or "space" shall mean to include bus, device supports, and connections. Provide insulating barriers in accordance with NEMA LI 1, Type GPO-3, 6.35 mm minimum thickness. Apply

moisture resistant coating to all rough-cut edges of barriers. Switchboard shall be completely factory engineered and assembled, including protective devices and equipment indicated with necessary interconnections, instrumentation, and control wiring.

2.2.2.1 Enclosure

The switchboard and switchgear enclosure shall be a NEMA 1 indoor enclosure. Enclosure shall be bolted together with removable bolt-on side and hinged rear covers. Front and rear doors shall be provided with stainless steel pad lockable vault handles with a three point catch. Bases, frames and channels of enclosure shall be corrosion resistant and shall be fabricated of ASTM A 167 type 304 or 304L stainless steel. Base shall include any part of enclosure that is within 75 mm of concrete pad. Galvanized steel shall be ASTM A 123/A 123M, ASTM A 653/A 653M G90 coating, and ASTM A 153/A 153M, as applicable. Galvanize after fabrication where practicable. Paint enclosure, including bases, ASTM D 1535 light gray No. 61 or No. 49. Paint coating system shall comply with NEMA C57.12.28 for galvanized steel .

2.2.2.2 Bus Bars

Bus bars shall be copper with contact surfaces . Plating shall be a minimum of .005mm thick. Make bus connections and joints with hardened steel bolts. The through-bus shall be rated at the full ampacity of the main throughout the switchboard. Provide minimum 6.35 mm by 50.8 mm copper ground bus secured to each vertical section along the entire length of the switchboard and switchgear. The neutral bus shall be rated 100 percent of the main bus continuous current rating. Phase bus bars shall be insulated with an epoxy finish coating powder providing a minimum breakdown voltage of 16,000 volts per ASTM D 149.

2.2.2.3 Main Section

The main section shall consist of an type utilizing vaccum interupt.

2.2.2.4 Distribution Sections

The distribution sections shall consist of vaccum power circuit breakers.

2.2.2.5 Combination Sections

Combination sections shall consist of molded-case circuit breakers for the main and branch devices as indicated.

2.2.2.6 Handles

Handles for individually mounted devices shall be of the same design and method of external operation. Label handles prominently to indicate device ampere rating, color coded for device type. Identify ON-OFF indication by handle position and by prominent marking.

2.2.3 Protective Device

Provide main and branch protective devices as indicated.

2.2.3.1 Power Circuit Breaker

IEEE C37.13. 220 Vac48 Vdc electrically operated drawout, , low-voltage

power circuit breaker with a short-circuit current rating rms amperes symmetrical as indicated at 380 volts. Breaker frame size shall be as indicated . Equip electrically operated breakers with motor-charged, stored-energy closing mechanism to permit rapid and safe closing of the breaker against fault currents within the short time rating of the breaker, independent of the operator's strength or effort in closing the handle.

2.2.3.2 Insulated-Case Breaker

UL listed, 100 percent rated, manually operated, low voltage, insulated-case circuit breaker, with a short-circuit current rating as indicated at 380 volts. Breaker frame size shall be as indicated.

2.2.3.3 Molded-Case Circuit Breaker

UL 489. UL listed and labeled, 100 percent rated, manually operated, low voltage molded-case circuit breaker, with a short-circuit current rating of as indicated at 380 volts. Breaker frame size shall be as indicated. Series rated circuit breakers are unacceptable.

2.2.3.4 Fusible Switches

Fusible Switches: Quick-make, quick-break, hinged-door type. Switches serving as motor disconnects shall be horsepower rated. Fuses shall be current-limiting cartridge type conforming to UL 198C, Class J for 0 to 600 amperes and Class L for 601 to 6000 amperes .

2.2.3.5 Integral Combination Breaker and Current-Limiting Fuses

UL 489. Provide integral combination molded-case circuit breaker and current-limiting fuses as indicated with a minimum short-circuit-current rating equal to the short-circuit-current rating of the switchboard and switchgear in which the circuit breaker will be mounted. Series rated circuit breakers are unacceptable. Coordination of overcurrent devices of the circuit breaker and current-limiting fuses shall be such that on overloads or fault currents of relatively low value, the overcurrent device of the breaker will be operated to clear the fault. For high magnitude short circuits above a predetermined value , the current-limiting fuses shall operate to clear the fault. Housing for the current-limiting fuses shall be an individual molding readily removable from the front and located at the load side of the circuit breaker. If the fuse housing is removed, a blown fuse shall be readily evident by means of a visible indicator. Removal of fuse housing shall cause the breaker contacts to open, and it shall not be possible to close the breaker contacts with the fuse housing removed. It shall not be possible to insert the fuse housing with a blown fuse or with one fuse missing. The blowing of any of the fuses shall cause the circuit breaker contacts to open.

2.2.4 Drawout Breakers

Equip drawout breakers with disconnecting contacts, wheels, and interlocks for drawout application. The main, auxiliary, and control disconnecting contacts shall be silver-plated, multifinger, positive pressure, self-aligning type. Each drawout breaker shall be provided with four-position operation. Each position shall be clearly identified by an indicator on the circuit breaker front panel.

a. Connected Position: Primary and secondary contacts are fully engaged. Breaker must be tripped before racking into or out of

position.

b. Test Position: Primary contacts are disconnected but secondary contacts remain fully engaged. Position shall allow complete test and operation of the breaker without energizing the primary circuit.

c. Disconnected Position: Primary and secondary contacts are disconnected.

d. Withdrawn (Removed) Position: Places breaker completely out of compartment, ready for removal. Removal of the breaker shall actuate assembly that isolates the primary stabs.

2.2.5 Electronic Trip Units

Equip main and distribution breakers as indicated with a solid-state tripping system consisting of three current sensors and a microprocessor-based trip unit that will provide true rms sensing adjustable time-current circuit protection. The ampere rating of the current sensors shall be as indicated . The trip unit ampere rating shall be as indicated . Ground fault protection shall be zero sequence sensing. The electronic trip units shall have the following features as indicated.

a. Breakers shall have long delay pick-up and time settings, and LED indication of cause of circuit breaker trip.

b. Main breakers shall have short delay pick-up and time settings and , instantaneous settings and ground fault settings.

c. Distribution breakers shall have short delay pick-up and time settings, instantaneous settings.

d. Main Breakers shall have a digital display for phase voltage, and percent THD voltage and current.

e. Main Breakers shall have provisions for communication via a network twisted pair cable for remote monitoring and control.

2.2.6 Electronic Trip Unit Central Monitor

Provide a microprocessor-based device designed to monitor and display parameters of the circuit breaker electronic trip units. The central monitor shall have the following features:

a. Alphanumeric display.

b. Indication of circuit breaker status; tripped, open, closed.

c. Cause of circuit breaker trip.

d. Phase, neutral, and ground current for each breaker.

e. Energy parameters for each breaker.

f. Provisions for communicating directly to a remote computer.

2.2.7 Instruments

ANSI C39.1 for electrical indicating switchboard instruments, with 2 percent accuracy. The ac ammeters and voltmeters shall be a minimum of 50.8 mm square, with 4.36 rad scale. Provide single phase indicating instruments with flush-mounted transfer switches for reading three phases.

2.2.7.1 Ac Ammeters

Transformer rated, 5-ampere input, for use with a 1150 to 5-ampere current transformer ratio, 50 hertz.

2.2.7.2 Ac Voltmeters

Self-contained.

2.2.7.3 Instrument Control Switches

Provide rotary cam-operated type with positive means of indicating contact positions. Switches shall have silver-to-silver contacts enclosed in a protective cover which can be removed to inspect the contacts.

2.2.8 Watthour and Digital Meters

2.2.8.1 Digital Meters

IEEE C37.90.1 for surge withstand. Provide true rms, plus/minus one percent accuracy, programmable, microprocessor-based meter enclosed in sealed cases with a simultaneous three line, twelve value LED display. Meters shall have 16 mm, minimum, LEDs. Watthour meter shall have 16 mm, minimum, LEDs. The meters shall accept input from standard 5A secondary instrument transformers and direct voltage monitoring range to 600 volts, phase to phase. Programming shall be via a front panel display and a communication interface with a computer. Password secured programming shall be stored in non-volatile EEPROM memory. Digital communications shall be Modbus RTU protocol via a RS485 serial port. The meter shall calculate and store average max/min demand values for all readings based on a user selectable sliding window averaging period. The meter shall have programmable hi/low set limits with two Form C dry contact relays when exceeding alarm conditions. Meter shall provide Total Harmonic Distortion (THD) measurement to the thirty-first order. The unit shall also store and time stamp up to 100 programmable triggered conditions. Waveforms shall be stored for all 6 channels of voltage and current for a minimum of 10 cycles prior to the event and 50 cycles past the event.

2.2.8.2 Electronic Watthour Meter

Provide a switchboard style electronic programmable watthour meter, semi-drawout, semi-flush mounted, as indicated. Meter shall either be programmed at the factory or shall be programmed in the field. When field programming is performed, turn field programming device over to the Contracting Officer at completion of project. Meter shall be coordinated to system requirements and conform to IEEE C12.16.

a. Design: Provide meter designed for use on a 3-phase, 4-wire, 380Y/220 volt system with 3 current transformers. Include necessary KYZ pulse initiation hardware for Energy Monitoring and Control System (EMCS).

b. Coordination: Provide meter coordinated with ratios of current transformers and transformer secondary voltage.

c. Class: 20. Form: 9S. Accuracy: +/- 1.0 percent. Finish: Class II.

d. Kilowatt-hour Register: 5 digit electronic programmable type.

e. Demand Register:

(1) Provide solid state IEEE C12.15.

(2) Meter reading multiplier: Indicate multiplier on the meter face.

(3) Demand interval length: shall be programmed for 30 minutes with rolling demand up to six subintervals per interval.

f. Meter fusing: Provide a fuse block mounted in the metering compartment containing one fuse per phase to protect the voltage input to the watthour meter. Size fuses as recommended by the meter manufacturer.

2.2.9 Current Transformers

IEEE C57.13. Transformers shall be single ratio, 50 hertz, 600 to 5-ampere ratio, 3.0 rating factor, with a metering accuracy class of 0.3 through B-0.5.

2.2.10 Potential Transformers

Provide two open delta, 15KV 220 VAC, 50 Hz potential transformers.

2.2.11 Meter Fusing

Provide a fuse block mounted in the metering compartment containing one fuse per phase to protect the voltage input to voltage sensing meters. Size fuses as recommended by the meter manufacturer.

2.2.12 Heaters

Provide 120-volt heaters in each switchboard switchgear section. Heaters shall be of sufficient capacity to control moisture condensation in the section, shall be 250 watts minimum, and shall be controlled by a thermostat located in the section. Thermostat shall be industrial type, high limit, to maintain sections within the range of 15 to 32 degrees C. Supply voltage for the heaters shall be obtained from a control power transformer within the switchboard and switchgear. If heater voltage is different than switchboard voltage, provide transformer rated to carry 125 percent of heater full load rating. Transformer shall have 220 degrees C insulation system with a temperature rise not exceeding 115 degrees C and shall conform to NEMA ST 20. Provide method for easy connection of heater to external power source. Provide temporary, reliable external power source if commercial power at rated voltage is not available on site.

2.2.13 Terminal Boards

Provide with engraved plastic terminal strips and screw type terminals for

external wiring between components and for internal wiring between removable assemblies. Terminal boards associated with current transformers shall be short-circuiting type. Terminate conductors for current transformers with ring-tongue lugs. Terminal board identification shall be identical in similar units. External wiring shall be color coded consistently for similar terminal boards.

2.2.14 Wire Marking

Mark control and metering conductors at each end. Provide factory-installed, white, plastic tubing, heat stamped with black block type letters on factory-installed wiring. On field-installed wiring, provide white, preprinted, polyvinyl chloride (PVC) sleeves, heat stamped with black block type letters. Each sleeve shall contain a single letter or number, shall be elliptically shaped to securely grip the wire, and shall be keyed in such a manner to ensure alignment with adjacent sleeves. Provide specific wire markings using the appropriate combination of individual sleeves. Each wire marker shall indicate the device or equipment, including specific terminal number to which the remote end of the wire is attached.

2.3 NAMEPLATES

Provide as specified in Section 16050 BASIC ELECTRICAL MATERIALS AND METHODS.

2.4 WARNING SIGNS

Provide as specified in Section 16050 BASIC ELECTRICAL MATERIALS AND METHODS.

2.5 SOURCE QUALITY CONTROL

2.5.1 Equipment Test Schedule

The Government reserves the right to witness tests. Provide equipment test schedules for tests to be performed at the manufacturer's test facility. Submit required test schedule and location, and notify the Contracting Officer 30 calendar days before scheduled test date. Notify Contracting Officer 15 calendar days in advance of changes to scheduled date.

a. Test Instrument Calibration

(1) The manufacturer shall have a calibration program which assures that all applicable test instruments are maintained within rated accuracy.

(2) The accuracy shall be directly traceable to the National Institute of Standards and Technology.

(3) Instrument calibration frequency schedule shall not exceed 12 months for both test floor instruments and leased specialty equipment.

(4) Dated calibration labels shall be visible on all test equipment.

(5) Calibrating standard shall be of higher accuracy than that of the instrument tested.

(6) Keep up-to-date records that indicate dates and test results of instruments calibrated or tested. For instruments calibrated by the manufacturer on a routine basis, in lieu of third party calibration, include the following:

(a) Maintain up-to-date instrument calibration instructions and procedures for each test instrument.

(b) Identify the third party/laboratory calibrated instrument to verify that calibrating standard is met.

2.5.2 Switchboard and Switchgear Design Tests

NEMA PB 2 and UL 891 and IEEE C37.20.2 and UL 1558.

2.5.2.1 Design Tests

Furnish documentation showing the results of design tests on a product of the same series and rating as that provided by this specification.

a. Short-circuit current test

b. Enclosure tests

c. Dielectric test

2.5.3 Switchboard and Switchgear Production Tests

NEMA PB 2 and UL 891 and IEEE C37.20.2 and UL 1558. Furnish reports which include results of production tests performed on the actual equipment for this project. These tests include:

a. 60-hertz dielectric tests

b. Mechanical operation tests

c. Electrical operation and control wiring tests

d. Ground fault sensing equipment test

PART 3 EXECUTION

3.1 INSTALLATION

Electrical installations shall conform to IEEE C2, NFPA 70, and to the requirements specified herein.

3.2 GROUNDING

NFPA 70 and IEEE C2, except that grounds and grounding systems shall have a resistance to solid earth ground not exceeding 5 ohms.

3.2.1 Grounding Electrodes

Provide driven ground rods as specified in other Electrical Sections . Connect ground conductors to the upper end of the ground rods by exothermic weld or compression connector. Provide compression connectors at equipment end of ground conductors.

3.2.2 Equipment Grounding

Provide bare copper cable not smaller than No. 4/0 AWG not less than 610 mm below grade connecting to the indicated ground rods. When work in addition to that indicated or specified is directed to obtain the specified ground resistance, the provision of the contract covering "Changes" shall apply.

3.2.3 Connections

Make joints in grounding conductors and loops by exothermic weld or compression connector.

3.2.4 Grounding and Bonding Equipment

UL 467, except as indicated or specified otherwise.

3.3 INSTALLATION OF EQUIPMENT AND ASSEMBLIES

Install and connect equipment furnished under this section as indicated on project drawings, the approved shop drawings, and as specified herein.

3.3.1 Switchboard

NEMA PB 2.1.

3.3.2 Switchgear

IEEE C37.20.1.

3.3.3 Meters and Instrument Transformers

NEMA C12.1.

3.3.4 Galvanizing Repair

Repair damage to galvanized coatings using ASTM A 780, zinc rich paint, for galvanizing damaged by handling, transporting, cutting, welding, or bolting. Do not heat surfaces that repair paint has been applied to.

3.4 FOUNDATION FOR EQUIPMENT AND ASSEMBLIES

3.4.1 Interior Location

Mount switchboard and switchgear on concrete slab. Unless otherwise indicated, the slab shall be at least 100 mm thick. The top of the concrete slab shall be approximately 100 mm above finished floor. Edges above floor shall have 15 mm chamfer. The slab shall be of adequate size to project at least 100 mm beyond the equipment. Provide conduit turnups and cable entrance space required by the equipment to be mounted. Seal voids around conduit openings in slab with water- and oil-resistant caulking or sealant. Cut off and bush conduits 75 mm above slab surface. Concrete work shall be as specified in Section 03300 CAST-IN-PLACE CONCRETE.

3.5 FIELD QUALITY CONTROL

Contractor shall submit request for settings of breakers to the Contracting Officer after approval of switchboard and switchgear and at least 30 days in advance of their requirement.

3.5.1 Performance of Acceptance Checks and Tests

Perform in accordance with the manufacturer's recommendations and include the following visual and mechanical inspections and electrical tests, performed in accordance with NETA ATS.

3.5.1.1 Switchboard Assemblies

a. Visual and Mechanical Inspection

(1) Compare equipment nameplate data with specifications and approved shop drawings.

(2) Inspect physical, electrical, and mechanical condition.

(3) Confirm correct application of manufacturer's recommended lubricants.

(4) Verify appropriate anchorage, required area clearances, and correct alignment.

(5) Inspect all doors, panels, and sections for paint, dents, scratches, fit, and missing hardware.

(6) Verify that circuit breaker sizes and types correspond to approved shop drawings.

(7) Verify that current transformer ratios correspond to approved shop drawings.

(8) Inspect all bolted electrical connections for high resistance using low-resistance ohmmeter, verifying tightness of accessible bolted electrical connections by calibrated torque-wrench method, or performing thermographic survey.

(9) Confirm correct operation and sequencing of electrical and mechanical interlock systems.

(10) Clean switchboard.

(11) Inspect insulators for evidence of physical damage or contaminated surfaces.

(12) Verify correct barrier and shutter installation and operation.

(13) Exercise all active components.

(14) Inspect all mechanical indicating devices for correct operation.

(15) Verify that vents are clear.

(16) Test operation, alignment, and penetration of instrument transformer withdrawal disconnects.

(17) Inspect control power transformers.

b. Electrical Tests

(1) Perform insulation-resistance tests on each bus section.

(2) Perform overpotential tests.

(3) Perform insulation-resistance test on control wiring; Do not perform this test on wiring connected to solid-state components.

(4) Perform control wiring performance test.

(5) Perform primary current injection tests on the entire current circuit in each section of assembly.

(6) Verify operation of switchboard heaters.

3.5.1.2 Switchgear

a. Visual and Mechanical Inspection

(1) Compare equipment nameplate data with specifications and approved shop drawings.

(2) Inspect physical, electrical, and mechanical condition.

(3) Confirm correct application of manufacturer's recommended lubricants.

(4) Verify appropriate anchorage, required area clearances, and correct alignment.

(5) Inspect all doors, panels, and sections for paint, dents, scratches, fit, and missing hardware.

(6) Verify that circuit breaker sizes and types correspond to approved shop drawings.

(7) Verify that current transformer ratios correspond to approved shop drawings.

(8) Inspect all bolted electrical connections for high resistance using low-resistance ohmmeter, verifying tightness of accessible bolted electrical connections by calibrated torque-wrench method, or performing thermographic survey.

(9) Confirm correct operation and sequencing of electrical and mechanical interlock systems.

(10) Clean switchgear.

(11) Inspect insulators for evidence of physical damage or contaminated surfaces.

(12) Verify correct barrier and shutter installation and operation.

(13) Exercise all active components.

(14) Inspect all mechanical indicating devices for correct

operation.

(15) Verify that vents are clear.

(16) Test operation, alignment, and penetration of instrument transformer withdrawal disconnects.

(17) Inspect control power transformers.

b. Electrical Tests

(1) Perform insulation-resistance tests on each bus section.

(2) Perform overpotential tests.

(3) Perform insulation-resistance test on control wiring; Do not perform this test on wiring connected to solid-state components.

(4) Perform control wiring performance test.

(5) Perform primary current injection tests on the entire current circuit in each section of assembly.

(6) Verify operation of switchgear heaters.

3.5.1.3 Circuit Breakers - Low Voltage - Power

a. Visual and Mechanical Inspection

(1) Compare nameplate data with specifications and approved shop drawings.

(2) Inspect physical and mechanical condition.

(3) Confirm correct application of manufacturer's recommended lubricants.

(4) Inspect anchorage, alignment, and grounding. Inspect arc chutes. Inspect moving and stationary contacts for condition, wear, and alignment.

(5) Verify that all maintenance devices are available for servicing and operating the breaker.

(6) Verify that primary and secondary contact wipe and other dimensions vital to satisfactory operation of the breaker are correct.

(7) Perform all mechanical operator and contact alignment tests on both the breaker and its operating mechanism.

(8) Inspect all bolted electrical connections for high resistance using low-resistance ohmmeter, verifying tightness of accessible bolted electrical connections by calibrated torque-wrench method, or performing thermographic survey.

(9) Verify cell fit and element alignment.

(10) Verify racking mechanism.

b. Electrical Tests

(1) Perform contact-resistance tests on each breaker.

(2) Perform insulation-resistance tests.

(3) Adjust Breaker(s) for final settings in accordance with Government provided settings.

(4) Determine long-time minimum pickup current by primary current injection.

(5) Determine long-time delay by primary current injection.

(6) Determine short-time pickup and delay by primary current injection.

(7) Determine ground-fault pickup and delay by primary current injection.

(8) Determine instantaneous pickup value by primary current injection.

(9) Activate auxiliary protective devices, such as ground-fault or undervoltage relays, to ensure operation of shunt trip devices; Check the operation of electrically-operated breakers in their cubicle.

(10) Verify correct operation of any auxiliary features such as trip and pickup indicators, zone interlocking, electrical close and trip operation, trip-free, and antipump function.

(11) Verify operation of charging mechanism.

3.5.1.4 Circuit Breakers

Insulated-Caseand Molded Case with Solid State Trips

a. Visual and Mechanical Inspection

(1) Compare nameplate data with specifications and approved shop drawings.

(2) Inspect circuit breaker for correct mounting.

(3) Operate circuit breaker to ensure smooth operation.

(4) Inspect case for cracks or other defects.

(5) Inspect all bolted electrical connections for high resistance using low resistance ohmmeter, verifying tightness of accessible bolted connections and/or cable connections by calibrated torque-wrench method, or performing thermographic survey.

(6) Inspect mechanism contacts and arc chutes in unsealed units.

b. Electrical Tests

(1) Perform contact-resistance tests.

(2) Perform insulation-resistance tests.

(3) Perform Breaker adjustments for final settings in accordance with Government provided settings.

(4) Perform long-time delay time-current characteristic tests

(5) Determine short-time pickup and delay by primary current injection.

(6) Determine instantaneous pickup current by primary injection.

3.5.1.5 Current Transformers

a. Visual and Mechanical Inspection

(1) Compare equipment nameplate data with specifications and approved shop drawings.

(2) Inspect physical and mechanical condition.

(3) Verify correct connection.

(4) Verify that adequate clearances exist between primary and secondary circuit.

(5) Inspect all bolted electrical connections for high resistance using low-resistance ohmmeter, verifying tightness of accessible bolted electrical connections by calibrated torque-wrench method, or performing thermographic survey.

(6) Verify that all required grounding and shorting connections provide good contact.

b. Electrical Tests

(1) Perform resistance measurements through all bolted connections with low-resistance ohmmeter, if applicable.

(2) Perform insulation-resistance tests.

(3) Perform polarity tests.

(4) Perform ratio-verification tests.

3.5.1.6 Metering and Instrumentation

a. Visual and Mechanical Inspection

(1) Compare equipment nameplate data with specifications and approved shop drawings.

(2) Inspect physical and mechanical condition.

(3) Verify tightness of electrical connections.

b. Electrical Tests

(1) Determine accuracy of meters at 25, 50, 75, and 100 percent of full scale.

(2) Calibrate watthour meters according to manufacturer's published data.

(3) Verify all instrument multipliers.

(4) Electrically confirm that current transformer and voltage transformer secondary circuits are intact.

3.5.1.7 Grounding System

a. Visual and Mechanical Inspection

(1) Inspect ground system for compliance with contract plans and specifications.

b. Electrical Tests

(1) Perform ground-impedance measurements utilizing the fall-of-potential method. On systems consisting of interconnected ground rods, perform tests after interconnections are complete. On systems consisting of a single ground rod perform tests before any wire is connected. Take measurements in normally dry weather, not less than 48 hours after rainfall. Use a portable ground testing megger in accordance with manufacturer's instructions to test each ground or group of grounds. The instrument shall be equipped with a meter reading directly in ohms or fractions thereof to indicate the ground value of the ground rod or grounding systems under test.

(2) Submit the measured ground resistance of each ground rod and grounding system, indicating the location of the rod and grounding system. Include the test method and test setup (i.e., pin location) used to determine ground resistance and soil conditions at the time the measurements were made.

3.5.2 Follow-Up Verification

Upon completion of acceptance checks, settings, and tests, the Contractor shall show by demonstration in service that circuits and devices are in good operating condition and properly performing the intended function. Circuit breakers shall be tripped by operation of each protective device. Test shall require each item to perform its function not less than three times. As an exception to requirements stated elsewhere in the contract, the Contracting Officer shall be given 5 working days advance notice of the dates and times for checks, settings, and tests.

-- End of Section --

SECTION 16475

POWER SYSTEM

PART 1 GENERAL

1.1 REFERENCES

The publications listed below form a part of this specification to the extent referenced. The publications are referred to in the text by basic designation only.

Unless noted otherwise, all material used shall be in compliance with the requirements of the applicable German (DIN) Standards. In the event DIN Standard material is unavailable, contractor may then select comparable British Standard (BS), or Underwriters Laboratories Inc. (UL) listed material. Equipment enclosure types shall be in compliance with the National Electrical Manufacturer's Association (NEMA) or the International Electro-Technical Committee (IEC) standards. Material and equipment installed under this contract shall be for the appropriate application.

Unless otherwise specified or indicated, electrical and electronics terms used in these specifications and on the Drawings, shall be defined in DIN, I.E.C., BS or EN standards.

AMERICAN NATIONAL STANDARDS INSTITUTE (ANSI)

ANSI C12.11	(1987; R 1993) Instrument Transformers for Revenue Metering, 10 kV BIL through 350 kV BIL (0.6 kV NSV through 69 kV NSV)
ANSI C37.06	(1997) AC High-Voltage Circuit Breakers Rated on a Symmetrical Current Basis - Preferred Ratings and Related Required Capabilities for Switchgear
ANSI C37.16	(2000) Low-Voltage Power Circuit Breakers and AC Power Circuit Protectors - Preferred Ratings, Related Requirements, and Application Recommendations
ANSI C37.50	(1989; R 1995) Switchgear, Low-Voltage AC Power Circuit Breakers Used in Enclosures - Test Procedures

ASTM INTERNATIONAL (ASTM)

ASTM D 2472	(2000) Sulfur Hexafluoride

INSTITUTE OF ELECTRICAL AND ELECTRONICS ENGINEERS (IEEE)

IEEE C37.04	(1999) Rating Structure for AC High-Voltage Circuit Breakers Rated on a Symmetrical Current Basis
IEEE C37.13	(1990; R 1995) Low-Voltage AC Power

	Circuit Breakers Used in Enclosures
IEEE C37.20.1	(1993) Metal-Enclosed Low-Voltage Power Circuit-Breaker Switchgear
IEEE C57.13	(1993) Instrument Transformers

NATIONAL ELECTRICAL MANUFACTURERS ASSOCIATION (NEMA)

NEMA AB 1	(1999) Molded Case Circuit Breakers and Molded Case Switches
NEMA FU 1	(1986; R 1996) Low Voltage Cartridge Fuses
NEMA ICS 1	(2000) Industrial Control and Systems: General Requirements
NEMA ICS 2	(2000) Industrial Controls and Systems: Controllers, Contactors, and Overload Relays Rated Not More than 2000 Volts AC or 750 Volts DC
NEMA ICS 3	(1993) Industrial Control and Systems Factory Built Assemblies
NEMA ICS 6	(1993; R 2001) Industrial Control and Systems, Enclosures
NEMA SG 3	(1995) Power Switching Equipment
NEMA SG 5	(1995) Power Switchgear Assemblies

NATIONAL FIRE PROTECTION ASSOCIATION (NFPA)

NFPA 70	(2005) National Electrical Code

UNDERWRITERS LABORATORIES (UL)

UL 198B	(1995) Class H Fuses
UL 486E	(1994; Rev thru May 2000) Equipment Wiring Terminals for Use with Aluminum and/or Copper Conductors
UL 489	((1996; Rev thru Mar 2000) Molded-Case Circuit Breakers, Molded-Case Switches, and Circuit-Breaker Enclosures
UL 508	(1999; R 2002, Bul. 2001, 2002, 2003) Industrial Control Equipment
UL 845	(1995; Rev thru Apr 2004) Motor Control Centers
UL 877	(1993; Rev thru Nov 1999) Circuit Breakers and Circuit-Breaker Enclosures for Use in Hazardous (Classified) Locations

1.2 SUBMITTALS

Government approval is required for submittals with a "G" designation; submittals not having a "G" designation are for information only. When used, a designation following the "G" designation identifies the office that will review the submittal for the Government. The following shall be submitted in accordance with Section 01330 SUBMITTAL PROCEDURES:

SD-03 Product Data

Equipment; G

Data consisting of manufacturer's time-current characteristic curves for individual protective devices, recommended settings of adjustable protective devices, and recommended ratings of non-adjustable protective devices.

Protective Relays; G

Data shall including calibration and testing procedures and instructions pertaining to the frequency of calibration, inspection, adjustment, cleaning, and lubrication.

Installation; G

Procedures including diagrams, instructions, and precautions required to properly install, adjust, calibrate, and test the devices and equipment.

SD-06 Test Reports

Field Testing; G

The proposed test plan, prior to field tests. Plan shall consist of complete field test procedure including tests to be performed, test equipment required, and tolerance limits, including complete testing and verification of the ground fault protection equipment, where used. Performance test reports in booklet form showing all field tests performed to adjust each component and all field tests performed to prove compliance with the specified performance criteria, upon completion and testing of the installed system. Each test report shall indicate the final position of controls.

1.3 SYSTEM DESCRIPTION

The power system covered by this specification consists of: Diesel-generators, through step up transformers, deliver 15kV, 50 Hertz, through medium voltage switchgear to the facility underground power distribution feeder circuits.

High Voltage (15kV) Switchgear: Dead-front type (i.e. no live parts shall be exposed) switchgear shall consist of a Generator Bus and a Distribution Bus. Both buses shall be connected via a bus-tie circuit breaker. Distribution Bus shall be provided with a minimum of six (6) 15 kV feeder circuit breakers and one (1) spare 15 kV circuit breaker for future connection to commercial power. Minimum three (3) high voltage feeders each shall service initial KMTC loads. Circuit breakers shall be vacuum or SF-6 gas filled type. Each feeder breaker shall be furnish with, but not limited

to, necessary relays, ammeter, voltmeter, current and potential transformers, etc. for recording current and voltage readings. Concrete encased high voltage feeder cable get-a-ways (duct-bank) shall be provided from each breaker cubicles to outside manhole(s). Spare conduit shall be provided in each get-a-way duct-bank).

The 15 kV paralleling switchgear shall be of Russelectric manufacture and the following list shall not be considered all inclusive, but a list of typical components for a typical metal-clad, cubicle switchgear (quantity as indicated on drawings) lineup. The switchgear line-up shall be listed and labeled by U.L. under "Circuit Breakers and Metal-Clad Switchgear over 600 Volts (DLAH)". The switchgear line-up shall include the following:

Generator Circuit Breaker Cubicles (quantity as indicated on drawings with provisions for expansion of three (3) additional cubicles), each consisting of:

1 - Metal-clad enclosed cubicle
1 - 15,000 volt, 50 hz vacuum circuit breaker, 3 phase, 1200 amperes,stored energy, draw out type, arranged for operation on 48 VDC control power, with 500 MVA, 3 phase, interrupting rating. The power circuit breaker will be provided with short circuit protection, along with an anti-pump relay system, and automatic control system
1 - Set (2) potential transformers, ratio as required, fixed mounted type, with 15,000 volt primary and 220 volt secondary
1 - Multi-phase, time overcurrent relay with ground fault, (Note: ground fault CT furnished by others and mounted on the neutral to ground connection of the generator)
1 - Ground fault relay, Device #51G
1 - Set of (3) current transformers, ratio as required, for metering, relaying, etc.
1 - Set of 3 phase, 1200 amperes, insulated copper bus and ground bus. All joints to be silver plated
1 - Set of control wiring, fuses, fuse blocks, terminals, nameplates, etc. All wiring to be labeled at both ends. Wiring labels will match manufacturer's drawings
1 - Set of compression type lugs for customer's incoming generator connections

Operating Instructions: Contractor shall provide, mounted in a frame, a complete electrical one-line diagram of the power plant with detailed operating instruction. Instruction shall be mounted on a wall inside the switchgear room. Similarly, complete fuel and cooling system schematic diagrams shall also be provided in the switchgear room.

Operating Power Systems. Specification generally indicates that power supplies will be provided as required. The power supply output voltage will be that which is normally used by the switchgear/device manufacturer. Rack mounted gell cell sealed batteries are preferred, but if DC power with venting batteries are to be used, the manufacturer will install the power supply in a free standing enclosure near the switchgear. In either case, AC input will be provided. Charger will be of adjustable quick and trickle charge type. Input voltage will be 380V, 50HZ, AC. Output voltage will be as required by the manufacturer. Charger will be similar to that specified elsewhere in these specifications. Batteries will be series connected, 10 or 20 year rated of 200AH or greater as required by switchgear manufacturer. DC battery status/condition monitors are to be included. If non-sealed batteries are used, the enclosure is to include slide type

mounting racks, hardware, battery pads and acid resistant bottom plate and spillage/rupture battery acid catch basin. Lower portion of enclosure to include ventilated opening. Top of enclosure is to be ducted (PVC or Stainless Steel) for battery ventilation exhaust air to the switchboard room. Cabinet door to be hinged and latched at the top and bottom of the door.

1.4 QUALIFICATIONS

1.4.1 System Coordinator

System coordination, recommended ratings and settings of protective devices, and design analysis shall be accomplished by a registered professional electrical power engineer with a minimum of 3 years of current experience in the coordination of electrical power systems.

1.4.2 System Installer

Calibration, testing, adjustment, and placing into service of the protective devices shall be accomplished by a manufacturer's product field service engineer or independent testing company with a minimum of two years of current product experience in protective devices.

1.5 DELIVERY, STORAGE, AND HANDLING

Devices and equipment shall be visually inspected when received and prior to acceptance from conveyance. Stored items shall be protected from the environment in accordance with the manufacturer's published instructions. Damaged items shall be replaced.

1.6 PROJECT/SITE CONDITIONS

Devices and equipment furnished under this section shall be suitable for the following site conditions. Seismic details shall conform to Section 16070 SEISMIC PROTECTION FOR ELECTRICAL EQUIPMENT.

1.7 EXTRA MATERIALS

The following spare fuses or spare fuse elements shall be delivered to the Contracting officer when the electrical system is accepted:

FUSE TYPE/CLASS	VOLTAGE	CURRENT	NO. OF SPARES
RK1/RK5		600V	10% of system requirement

PART 2 PRODUCTS

2.1 STANDARD PRODUCT

Protective devices and equipment shall be the standard product of a manufacturer regularly engaged in the manufacture of the product and shall essentially duplicate items that have been in satisfactory utility type use for at least two years prior to bid opening.

Provide material and equipment shall be the standard product of a manufacturer regularly engaged in the manufacture of the product and shall essentially duplicate items that have been in satisfactory use for at least 2 years prior to bid opening. Items of the same classification shall be

identical including equipment, assemblies, parts and components.

2.2 NAMEPLATES

Nameplates shall be provided to identify all protective devices and equipment. Nameplate information shall be in accordance with NEMA AB 1, NEMA SG 3, NEMA SG 5, as applicable.

2.3 CORROSION PROTECTION

Metallic materials shall be protected against corrosion. Ferrous metal hardware shall be zinc-plated, chrome-plated , or painted.

2.4 MOTOR CONTROLS AND MOTOR CONTROL CENTERS

Motor controls and motor control centers shall be in accordance with NEMA ICS 1, NEMA ICS 2, NEMA ICS 3 and NEMA ICS 6, and UL 508 and UL 845.

2.4.1 Motor Starters

Combination starters shall be provided with circuit breakers as indicated.

2.4.2 Thermal-Overload Protection

Each motor of 93 W (1/8 hp) or larger shall be provided with thermal-overload protection. Polyphase motors shall have overload protection in each ungrounded conductor. The overload-protection device shall be provided either integral with the motor or controller, or shall be mounted in a separate enclosure. Unless otherwise specified, the protective device shall be of the manually reset type. Single or double pole tumbler switches specifically designed for alternating-current operation only may be used as manual controllers for single-phase motors having a current rating not in excess of 80 percent of the switch rating.

2.4.3 Low-Voltage Motor Overload Relays

2.4.3.1 General

Thermal overload relays shall conform to NEMA ICS 2 and UL 508. Overload protection shall be provided either integral with the motor or controller, and shall be rated in accordance with the requirements of NFPA 70 for the Power plant. Standard units shall be used for motor starting times up to 7 second.

2.4.3.2 Construction

Manual reset type thermal relays shall be bimetallic construction. Automatic reset type relays shall be bimetallic construction. Magnetic current relays shall consist of a contact mechanism and a dash pot mounted on a common frame.

2.4.3.3 Ratings

Voltage ratings shall be not less than the applicable circuit voltage. Trip current ratings shall be established by selection of the replaceable overload device and shall not be adjustable. Where the controller is remotely-located or difficult to reach, an automatic reset, non-compensated overload relay shall be provided. Manual reset overload relays shall be provided otherwise, and at all locations where automatic starting is

provided. Where the motor is located in a constant ambient temperature, and the thermal device is located in an ambient temperature that regularly varies by more than minus 10 degrees C, an ambient temperature-compensated overload relay shall be provided.

2.4.4 Automatic Control Devices

2.4.4.1 Direct Control

Automatic control devices (such as thermostats, float or pressure switches) which control the starting and stopping of motors directly shall be designed for that purpose and have an adequate kilowatt rating.

2.4.4.2 Pilot-Relay Control

Where the automatic-control device does not have such a rating, a magnetic starter shall be used, with the automatic-control device actuating the pilot-control circuit.

2.4.4.3 Manual/Automatic Selection

a. Where combination manual and automatic control is specified and the automatic-control device actuates the pilot control circuit of a magnetic starter, the magnetic starter shall be provided with a three-position selector switch marked MANUAL-OFF-AUTOMATIC.

b. Connections to the selector switch shall only allow the normal automatic regulatory control devices to be bypassed when the switch is in the Manual position; all safety control devices, such as low-or high-pressure cutouts, high-temperature cutouts, and motor-overload protective devices, shall be connected in the motor-control circuit in both the Manual and the Automatic positions of the selector switch. Control circuit connections to any MANUAL-OFF-AUTOMATIC switch or to more than one automatic regulatory control device shall be made in accordance with wiring diagram approved by the contracting Officer unless such diagram is included on the drawings. All controls shall be 120 volts or less unless otherwise indicated.

2.5 LOW-VOLTAGE FUSES

2.5.1 General

Low-voltage fuses shall conform to NEMA FU 1. Time delay and nontime delay options shall be as specified. Equipment provided under this contract shall be provided with a complete set of properly rated fuses when the equipment manufacturer utilizes fuses in the manufacture of the equipment, or if current-limiting fuses are required to be installed to limit the ampere-interrupting capacity of circuit breakers or equipment to less than the maximum available fault current at the location of the equipment to be installed. Fuses shall have a voltage rating of not less than the phase-to-phase circuit voltage, and shall have the time-current characteristics requires for effective power system coordination.

2.5.2 Cartridge Fuses; Noncurrent-Limiting Type

Cartridge fuses of the noncurrent-limiting type shall be Class H, nonrenewable, dual element, time lag type and shall have interrupting capacity of 10,000 amperes. Class H Fuses shall conform to UL 198B. At

500 percent current, cartridge fuses shall not blow in less than 10 seconds. Cartridge fuses shall be used for circuits rated in excess of 30 amperes, 125 volts, except where current-limiting fuses are indicated.

2.5.3 Motor and Transformer Circuit Fuses

2.5.3.1 Continuous Current Ratings (600 amperes and smaller)

Service entrance and feeder circuit fuses (600 amperes and smaller) shall be Class RK1, current-limiting, with 200,000 amperes interrupting capacity.

2.5.3.2 Motor and Transformer Circuit Fuses

Motor, motor controller, transformer, and inductive circuit fuses shall be Class RK1 or RK5.

2.6 MOLDED-CASE CIRCUIT BREAKERS

2.6.1 General

Molded-case circuit breakers shall conform to NEMA AB 1 and UL 489. Circuit breakers may be installed in panelboards, switchboards, enclosures, motor control centers, or combination motor controllers. Circuit breakers and circuit breaker enclosures located in hazardous (classified) areas shall conform to UL 877.

2.6.2 Construction

Molded-case circuit breakers shall be assembled as an integral unit in a supporting and enclosing housing of glass reinforced insulating material providing high dielectric strength. Circuit breakers shall be suitable for mounting and operating in any position. Lugs shall be listed for copper conductors only in accordance with UL 486E. Single-pole circuit breakers shall be full module size with not more than one pole per module. Multi-pole circuit breakers shall be of the common-trip type having a single operating handle such that an overload or short circuit on any one pole will result in all poles opening simultaneously. Sizes of 100 amperes or less may consist of single-pole breakers permanently factory assembled into a multi-pole unit having an internal, mechanical, nontamperable common-trip mechanism and external handle ties. All circuit breakers shall have a quick-make, quick-break overcenter toggle-type mechanism, and the handle mechanism shall be trip-free to prevent holding the contacts closed against a short-circuit or sustained overload. All circuit breaker handles shall assume a position between "ON" and "OFF" when tripped automatically. All ratings shall be clearly visible.

2.6.3 Ratings

Voltage ratings shall be not less than the applicable circuit voltage. The interrupting rating of the circuit breakers shall be at least equal to the available short-circuit current at the line terminals of the circuit breaker and correspond to the UL listed integrated short-circuit current rating specified for the panelboards and switchboards. Molded-case circuit breakers shall have nominal voltage ratings, maximum continuous-current ratings, and maximum short-circuit interrupting ratings in accordance with NEMA AB 1. Ratings shall be coordinated with system X/R ratio.

2.6.4 Cascade System Ratings

Circuit breakers used in series combinations shall be in accordance with UL 489. Equipment, such as switchboards and panelboards, which house series-connected circuit breakers shall be clearly marked accordingly. Series combinations shall be listed in the UL Recognized Component Directory under "Circuit Breakers-Series Connected."

2.6.5 Thermal-Magnetic Trip Elements

Thermal magnetic circuit breakers shall be provided as shown. Automatic operation shall be obtained by means of thermal-magnetic tripping devices located in each pole providing inverse time delay and instantaneous circuit protection. The instantaneous magnetic trip shall be adjustable and accessible from the front of all circuit breakers on frame sizes above 150 amperes.

2.6.6 Solid-State Trip Elements

Solid-state circuit breakers shall be provided as shown. All electronics shall be self-contained and require no external relaying, power supply, or accessories. Printed circuit cards shall be treated to resist moisture absorption, fungus growth, and signal leakage. All electronics shall be housed in an enclosure which provides protection against arcs, magnetic interference, dust, and other contaminants. Solid-state sensing shall measure true RMS current with error less than one percent on systems with distortions through the 13th harmonic. Peak or average actuating devices are not acceptable. Current sensors shall be toroidal construction, encased in a plastic housing filled with epoxy to protect against damage and moisture and shall be integrally mounted on the breaker. Where indicated on the drawings, circuit breaker frames shall be rated for 100 percent continuous duty. Circuit breakers shall have tripping features as shown on the drawings and as described below:

a. Long-time current pick-up, adjustable from 50 percent to 100 percent of continuous current rating.

b. Adjustable long-time delay.

c. Short-time current pick-up, adjustable from 1.5 to 9 times long-time current setting.

d. Adjustable short-time delay.

e. Short-time I square times t switch.

f. Instantaneous current pick-up, adjustable from 1.5 to 9 times long-time current setting.

g. Ground-fault pick-up, adjustable from 20 percent to 60 percent of sensor rating, but in no case greater than 1200 amperes. Sensing of ground-fault current at the main bonding jumper or ground strap shall not be permitted. Zone-selective interlocking shall be provided as shown.

h. Adjustable ground-fault delay.

i. Ground-fault I square times t switch.

j. Overload and Short-circuit and Ground-fault trip indicators shall be provided.

2.6.7 Current-Limiting Circuit Breakers

Current-limiting circuit breakers shall be provided as shown. Current-limiting circuit breakers shall limit the let-through I square times t to a value less than the I square times t of one-half cycle of the symmetrical short-circuit current waveform. On fault currents below the threshold of limitation, breakers shall provide conventional overload and short-circuit protection. Integrally-fused circuit breakers shall not be used.

2.6.8 SWD Circuit Breakers

Circuit breakers rated 20 amperes and intended to switch 380 volts or less fluorescent lighting loads shall be marked "SWD."

2.6.9 HACR Circuit Breakers

Circuit breakers 60 amperes or below, 240 volts, 1-pole or 2-pole, intended to protect multi-motor and combination-load installations involved in heating, air conditioning, and refrigerating equipment shall be marked "Listed HACR Type."

2.7 LOW-VOLTAGE POWER CIRCUIT BREAKERS

2.7.1 Construction

Low-voltage power circuit breakers shall conform to IEEE C37.13, ANSI C37.16, and NEMA SG 3 and shall be three-pole, single-throw, stored energy, electrically operated, with drawout mounting. Solid-state trip elements which require no external power connections shall be provided. Circuit breakers shall have an open/close contact position indicator, charged/discharged stored energy indicator, primary disconnect devices, and a mechanical interlock to prevent making or breaking contact of the primary disconnects when the circuit breaker is closed. Control voltage shall be as indicated. The circuit breaker enclosure shall be suitable for its intended location.

2.7.2 Ratings

Voltage ratings shall be not less than the applicable circuit voltage. Circuit breakers shall be rated for 100 percent continuous duty and shall have trip current ratings and frame sizes as shown. Nominal voltage ratings, maximum continuous-current ratings, and maximum short-circuit interrupting ratings shall be in accordance with ANSI C37.16. Tripping features shall be as follows:

a. Long-time current pick-up, adjustable from 50 percent to 100 percent of sensor current rating.

b. Adjustable long-time delay.

c. Short-time current pick-up, adjustable from 1.5 to 9 times long-time current setting.

d. Adjustable short-time delay.

e. Short-time I square times t switch.

f. Instantaneous current pick-up, adjustable from 1.5 to 9 times long-time current setting.

g. Ground-fault pick-up, adjustable from 20 percent to 60 percent of sensor rating, but in no case greater than 1200 amperes. Sensing of ground-fault current at the main bonding jumper or ground strap shall not be permitted. Zone-selective interlocking shall be provided as shown.

h. Adjustable ground-fault delay.

i. Ground-fault I square times t switch.

j. Overload and Short-circuit and Ground-fault trip indicators shall be provided.

2.8 MEDIUM-VOLTAGE CIRCUIT BREAKERS/INTERRUPTERS

2.8.1 Metal-Enclosed Type

Circuit breakers shall be of the drawout type, in accordance with IEEE C37.20.1 and NEMA SG 5.

2.8.2 Metal-Clad Type

Circuit breakers shall comply with IEEE C37.04 and shall consist of items listed for such units in NEMA SG 5.

2.8.3 SF6 Interrupters

SF6 interrupters shall be of the puffer type where the movement of the contact plunger will initiate the puff of SF6 gas across the contact to extinguish the arc at zero gauge tank pressure (atmospheric pressure). The puff of SF6 must be sufficient to clear an arc for 15 kV or lower class equipment and remain operational without damage or requiring maintenance or repair except for gas leaks. Breakers shall be provided with a loss-of-pressure alarm remote as shown on the drawings. Before the pressure in the container drops below the point where the breaker or switch cannot open safely without damage, the breaker shall activate the loss-of-pressure alarm, open automatically, and remain in the locked open position until repaired. If located inside a structure, breakers shall be located in a closed room with access only from outside, and provided with direct outdoor ventilation and a sensor unit which activates a vent fan and an alarm when a SF6 leak had occurred. The alarm will automatically be silenced when the oxygen in the room is above 19.5 percent. The SF6 shall meet the requirements of ASTM D 2472, except that the maximum dew point shall be minus 60 degrees C (corresponding to 11 ppm water by volume), with only 11 ppm water by volume, and the minimum purity shall be 99.9 percent by weight. Circuit breakers shall have provisions for maintenance slow closing of contacts and have a readily accessible contact wear indicator. Tripping time shall not exceed five cycles.

2.8.4 Vacuum Interrupters

Vacuum interrupters shall be hermetically-sealed in a high vacuum to protect contact from moisture and contamination. Circuit breakers shall have provisions for closing of contacts and have a readily contact wear

indicator. Tripping time shall not exceed five cycles.

2.8.5 Ratings

Main buses shall be three-phase three-wire with a continuous current rating of 1200 amperes rms. The neutral bus shall be rated for 1200 amperes, continuous. Switchgear ratings at 50 Hz shall be in accordance with ANSI C37.06 and as follows:

Maximum voltage.....15 kV

Nominal voltage class.....15 kV

BIL.....90 kV

Maximum symmetrical interrupting capacity.....40,000

3-second short-time-current carrying capacity.....as shown

Rated continuous current.....as shown

Frequency.....50 Hertz

2.9 INSTRUMENT TRANSFORMERS

2.9.1 General

Instrument transformers shall comply with ANSI C12.11 and IEEE C57.13. Instrument transformers shall be configured for mounting in/on the device to which they are applied. Polarity marks on instrument transformers shall be visually evident and shown on the drawings.

2.9.2 Current Transformers

Unless otherwise indicated, bar, wound, or window-type transformers are acceptable; and except for window-type units installed over insulated buses, transformers shall have a BIL rating consistent with the rated BIL of the associated switchgear or electric power apparatus bushings, buses or conductors. Current transformers shall have the indicated ratios. The continuous thermal-current rating factor shall be not less than 1.5. Other thermal and mechanical ratings of current transformers and their primary leads shall be coordinated with the design of the circuit breaker and shall be not less than the momentary rating of the associated circuit breaker. Circuit protectors shall be provided across secondary leads of the current transformers to prevent the accidental open-circuiting of the transformers while energized. Each terminal of each current transformer shall be connected to a short-circuiting terminal block in the circuit interrupting mechanism cabinet, power transformer terminal cabinet, and in the associated instrument and relay cabinets.

2.9.2.1 Current Transformers for Metal-Clad Switchgear

Single-ratio units, used for metering and relaying, shall have a metering accuracy class rating of as per manufactruer's ratings. Single-ratio units, used only for relaying, shall have a relaying accuracy class rating of as per manufactruer's ratings.

2.9.2.2 Voltage Transformers

Voltage transformers shall have indicated ratios. Units shall have an accuracy rating of 1,2. Voltage transformers shall be of the drawout type having current-limiting fuses in both primary and secondary circuits. Mechanical interlocks shall prevent removal of fuses, unless the associated voltage transformer is in a drawout position. Voltage transformer compartments shall have hinged doors.

PART 3 EXECUTION

3.1 VERIFICATION OF DIMENSIONS

After becoming familiar with details of the work, the Contractor shall verify dimensions in the field, and shall advise the Contracting Officer of any discrepancy before performing any work.

3.2 INSTALLATION

Protective devices shall be installed in accordance with the manufacturer's published instructions and in accordance with the requirements of NFPA 70 for the Power plant.

3.3 FIELD TESTING

3.3.1 General

Field testing shall be performed in the presence of the Contracting Officer. The Contractor shall notify the Contracting Officer prior to conducting tests. The Contractor shall furnish all materials, labor, and equipment necessary to conduct field tests. The Contractor shall perform all tests and inspections recommended by the manufacturer unless specifically waived by the Contracting Officer. The Contractor shall maintain a written record of all tests which includes date, test performed, personnel involved, devices tested, serial number and name of test equipment, and test results.

3.3.2 Safety

The Contractor shall provide and use safety devices such as rubber gloves, protective barriers, and danger signs to protect and warn personnel in the test vicinity. The Contractor shall replace any devices or equipment which are damaged due to improper test procedures or handling.

3.3.3 Molded-Case Circuit Breakers

Circuit breakers shall be visually inspected, operated manually, and connections checked for tightness. Current ratings shall be verified and adjustable settings incorporated in accordance with the coordination study.

3.3.4 Power Circuit Breakers

3.3.4.1 General

The Contractor shall visually inspect the circuit breaker and operate the circuit breaker manually; adjust and clean primary contacts in accordance with manufacturer's published instructions; check tolerances and clearances; check for proper lubrication; and ensure that all connections are tight. For electrically operated circuit breakers, the Contractor

shall verify operating voltages on closing and tripping coils. The Contractor shall verify fuse ratings in control circuits; electrically operate the breaker, where applicable; and implement settings in accordance with the coordination study.

3.3.4.2 Power Circuit Breaker Tests

The following power circuit breakers shall be tested in accordance with ANSI C37.50.

3.3.5 Protective Relays

Protective relays shall be visually and mechanically inspected, adjusted, tested, and calibrated in accordance with the manufacturer's published instructions. Tests shall include pick-up, timing, contact action, restraint, and other aspects necessary to ensure proper calibration and operation. Relay settings shall be implemented in accordance with the coordination study. Relay contacts shall be manually or electrically operated to verify that the proper breakers and alarms initiate. Relaying current transformers shall be field tested in accordance with IEEE C57.13.

-- End of Section --

SECTION 16510

INTERIOR LIGHTING

PART 1 GENERAL

1.1 REFERENCES

The publications listed below form a part of this specification to the extent referenced. The publications are referred to in the text by the basic designation only.

Unless noted otherwise, all material used shall be in compliance with the requirements of the applicable German (DIN) Standards. In the event DIN Standard material is unavailable, contractor may then select comparable British Standard (BS), or Underwriters Laboratories Inc. (UL) listed material. Equipment enclosure types shall be in compliance with the National Electrical Manufacturer's Association (NEMA) or the International Electro-Technical Committee (IEC) standards. Material and equipment installed under this contract shall be for the appropriate application.

ASTM INTERNATIONAL (ASTM)

ASTM A 580/A 580M	(1998) Stainless Steel Wire
ASTM A 641/A 641M	(1998) Zinc-Coated (Galvanized) Carbon Steel Wire
ASTM A 653/A 653M	(2001a) Steel Sheet, Zinc-Coated (Galvanized) or Zinc-Iron Alloy-Coated (Galvannealed) by the Hot-Dip Process
ASTM A 1008/A 1008M	(2002) Specification for Steel, Sheet, Cold-Rolled, Carbon Structural, High-Strength Low-Alloy with Improved Formability
ASTM B 633	(1998; E 2001) Electrodeposited Coatings of Zinc on Iron and Steel

BRITISH STANDARDS INSTITUTION (BSI)

BS 4533	(1990) Luminaires
BS 4533-102.1	Luminaires. Particular requirements. Specification for Fixed General Purpose Luminaires
BS EN 60598	(2004) Luminaires

DUETSCHES INSTITUTE FUR NORMUNG (DIN)

DIN 49780	(1983) Interior Luminaires: length of supply lead for portable luminaires and total length of pendant luminaires

EUROPEAN COMMITTEE FOR STANDARDIZATION (CEN)

EN 60598-2-1	(2001a) Steel Sheet, Zinc-Coated (Galvanized) or Zinc-Iron Alloy-Coated (Galvannealed) by the Hot-Dip Process

INTERNATIONAL ELECTROTECHNICAL COMMISSION (IEC)

IEC 60079-10	(2000) Electrical Apparatus for Explosive Gas Atmospheres
IEC 60598	(2003) Luminaires

NATIONAL FIRE PROTECTION ASSOCIATION (NFPA)

NFPA 70	(2005) National Electrical Code
NFPA 101	(2000) Life Safety Code

UNDERWRITERS LABORATORIES (UL)

UL 924	(1995; R 2001, Bul. 2000, 2001 and 2002) Emergency Lighting and Power Equipment
UL 935	(2001; Bul. 2000 and 2001) Fluorescent-Lamp Ballasts
UL 1598	(2000; Bul. 2000 and 2001) Luminaires

1.2 DEFINITIONS

1.2.1 Average Life

Time after which 50 percent will have failed and 50 percent will have survived under normal conditions.

1.2.2 Total Harmonic Distortion (THD)

The root mean square (RMS) of all the harmonic components divided by the total fundamental current.

1.2.3 I.E.C. Zones

The I.E.C. has defined 3 areas of hazardous gas or vapor release as follows:

Zone 0: Area in which an explosive mixture of gas, vapor, or mist is continuously present.

Zone 1: Zone in which an explosive mixture of gas, vapor, or mist is likely to occur during normal operation.

Zone 2: Zone in which an explosive mixture is not likely to occur in normal operation and if it occurs will only exist for a short time (leaks or maintenance).

1.3 SUBMITTALS

Government approval is required for submittals with a "G" designation;

submittals not having a "G" designation are for information only. When used, a designation following the "G" designation identifies the office that will review the submittal for the Government. The following shall be submitted in accordance with Section 01330 SUBMITTAL PROCEDURES:

SD-03 Product Data

Fluorescent lighting fixtures

Fluorescent electromagnetic ballasts

Exit signs

1.4 QUALITY ASSURANCE

1.4.1 Lighting Fixtures, Complete With Lamps and Ballasts

Submit one sample of each fixture type and large order item for inspection, review, and approval. The sample shall be retained for comparison against the remainder of the fixtures. The sample may be used in the final fixture installation.

PART 2 PRODUCTS

2.1 FLUORESCENT LIGHTING FIXTURES

UL 1598, IEC 60598, BS EN 60598, DIN 49780, or BS 4533. Fluorescent fixtures shall have magnetic ballasts unless specifically indicated otherwise.

2.1.1 Fluorescent Electromagnetic Ballasts

UL 935, BS 4533-102.1, EN 60598-2-1. Ballasts shall be standard high power factor type electromadnetic ballasts and shall be designed to operate on the voltage system to which they are connected. Provide three lamp fixtures with two ballasts per fixture.

Fixtures indicated for use in toilet rooms or other areas subject to exposure to water shall be rated for use in wet areas, per DIN, BS or EN standards.

2.2 SUSPENDED FIXTURES

ASTM A 580/A 580M or ASTM A 641/A 641M. Provide hangers capable of supporting twice the combined weight of fixtures supported by hangers.

2.3 EXIT SIGNS

UL 924, NFPA 70, and NFPA 101.

2.3.1 Self-Powered LED Type Exit Signs (Battery Backup)

Provide with automatic power failure device, test switch, pilot light, and fully automatic high/low trickle charger in a self-contained power pack. Battery shall be sealed electrolyte type, shall operate unattended, and require no maintenance, including no additional water, for a period of not less than 5 years. LED exit sign shall have emergency run time of 1 1/2 hours (minimum). The light emitting diodes shall have rated lamp life of 70,000 hours (minimum).

2.4 SUPPORT HANGERS FOR LIGHTING FIXTURES IN SUSPENDED CEILINGS

2.4.1 Wires

ASTM A 641/A 641M, Galvanized regular coating.

2.4.2 Straps

Galvanized steel, conforming to ASTM A 653/A 653M, with a light commercial zinc coating or ASTM A 1008/A 1008M with an electrodeposited zinc coating conforming to ASTM B 633, Type RS.

2.4.3 Rods

Threaded steel rods.

2.5 LIGHT SWITCHES

Provide explosion-proof switches per DIN, IEC 60079-10, BS, or EN standards for I.E.C. Zone 0 or 1 installations.

Enclose switches that have arcing contacts in explosion-proof housings. Enclosures for these locations must prevent the ignition of an explosive gas or vapor that may surround it. An explosion inside the enclosure shall not start a larger explosion outside. Each enclosure shall have adequate strength to resist explosive force and be flame-tight. The enclosures are not hermetically sealed, but that hot gases resulting from an internal explosion are cooled so that by the time they reach the outside hazardous atmosphere, they are too cool to affect ignition. Openings in an explosion-proof enclosure can be threaded-joint type or flat-joint type.

2.6 LIGHTING FIXTURE SCHEDULE

Light fixture shall be as follows:

1) Fixture A
   Type: Pendant mounted industrial fluorescent Light fixture with wide distribution reflector kit (2 Lamps)
   Lamp: T8/36w
   Volts: 220V
2) Fixture A1
   Type: Surface mounted industrial fluorescent Light fixture with wide distribution reflector kit (2 Lamps)
   Lamp: T8/36w
   Volts: 220V
3) Fixture B
   Type: Surface mounted with prismatic diffuser(2 Lamps)
   Lamp: T8/36w
   Volts: 220V

4) Fixture C
   Type: Pendant mounted industrial (fluorescent light fixture with reflector and acrylic lens (4 Lamps)
   Lamp: T8/36w
   Volts: 220V
5) Fixture C1
   Type: Surface mounted industrial fluorescet light fixture with reflector and acrylic lens (4 Lamps)
   Lamp: T8/36w

Volts: 220V

6) Fixture D
Type: Recessed/grid mounted fixture with acrylicl lens (4 Lamps)
Lamp: T8/36w
Volts: 220V

7) Fixture D1
Type: Recessed/grid mounted fixture for wet locations (4 Lamps)
Lamp: T8/36w
Volts: 220V

8) Fixture E
Type: Surface wall mounted fixture for wet locations (2 Lamps)
Lamp: T8/36w
Volts: 220V

9) Fixture F
Type: Wall mounted compact fluor. vapolets fixture for pits (2 Lamps)
Lamp: CF/26w
Volts: 220V

10) Fixture G
Type: Pendant mounted industrial low bay fixture (1 Lamp)
Lamp: HPS/150w
Volts: 220V

11) Fixture G1
Type: Pendant mounted industrial high bay fixture (1 Lamp)
Lamp: HPS/150w
Volts: 220V

12) Fixture I
Type: Wall mounted fluor. strip fixture for damp location (2 Lamps)
Lamp: TB/36w
Volts: 220V

13) Fixture J
Type: Surface mounted fluor. explosion proof fixture (2 Lamps)
Lamp: 36w
Volts: 220V

14) Fixture X1
Type: Exit sign with directional arrows as required (2 Lamps)
Lamp: 8w
Volts: 220V

15) Fixture X2
Type: Remote battery emergency fixture with halogen lamps (2 Lamps)
Lamp: Halogen/20w
Volts: 220V

PART 3 EXECUTION

3.1 INSTALLATION

3.1.1 Lamps

Lamps of the type, wattage, and voltage rating indicated shall be delivered to the project in the original cartons and installed just prior to project completion. Lamps installed and used for working light during construction

shall be replaced prior to turnover to the Government if more than 15 percent of their rated life has been used. Lamps shall be tested for proper operation prior to turn-over and shall be replaced if necessary with new lamps from the original manufacturer. Provide 10 percent spare lamps of each type from the original manufacturer.

3.1.2 Ballasts

As per manufacturer's recommedation

3.1.3 Exit Signs

Wire exit signs ahead of the switch to the normal lighting circuit located in the same room or area.

-- End of Section --

SECTION 16710

BUILDING TELECOMMUNICATIONS CABLING SYSTEM

PART 1 GENERAL

1.1 REFERENCES

The publications listed below form a part of this specification to the extent referenced. The publications are referred to within the text by the basic designation only.

ASTM INTERNATIONAL (ASTM)

ASTM D 709	(2001) Laminated Thermosetting Materials

ELECTRONIC INDUSTRIES ALLIANCE (EIA)

EIA TIA-455-21-A	(1988) FOTP-21 - Mating Durability of Fiber Optic Interconnecting Devices
EIA TIA/EIA-526-7	(1998) OFSTP-7 Measurement of Optical Power Loss of Installed Single-Mode Fiber Cable Plant (ANSI/TIA/EIA-526-7)
EIA TIA/EIA-568-B.1	(2001; Addendum 2001) Commercial Building Telecommunications Cabling Standard - Part 1: General Requirements (ANSI/TIA/EIA-568-B.1)
EIA TIA/EIA-568-B.2	(2001) Commercial Building Telecommunications Cabling Standard - Part 2: Balanced Twisted Pair Cabling Components (ANSI/TIA/EIA-568-B.2)
EIA TIA/EIA-568-B.3	(2000; Addendum 2002) Optical Fiber Cabling Components Standard (ANSI/TIA/EIA-568-B.3)
EIA TIA/EIA-569-A	(1998; Addenda 2000, 2001) Commercial Building Standards for Telecommunications Pathways and Spaces (ANSI/TIA/EIA-569-A)
EIA TIA/EIA-570-B	(2004) Residential Telecommunications Infrastructure
EIA TIA/EIA-604-3A	(2000) FOCIS 3 Fiber Optic Connector Intermateability Standard - Standard Type SC
EIA TIA/EIA-606-A	(2002) Administration Standard for the Telecommunications Infrastructure (ANSI/TIA/EIA-606)
EIA-310-D	(1992) Racks, Panels, and Associated Equipment

TIA J-STD-607-A	(2002) Commercial Building Grounding (Earthing) and Bonding Requirements for Telecommunications

INSTITUTE OF ELECTRICAL AND ELECTRONICS ENGINEERS (IEEE)

IEEE Std 100	(2000) The Authoritave Dictionary of IEEE Standards Terms

NATIONAL FIRE PROTECTION ASSOCIATION (NFPA)

NFPA 70	(2005) National Electrical Code

U.S. FEDERAL COMMUNICATIONS COMMISSION (FCC)

FCC Part 68	Connection of Terminal Equipment to the Telephone Network (47 CFR 68)

UNDERWRITERS LABORATORIES (UL)

UL 1863	(2004) Communication Circuit Accessories
UL 444	(2002; Rev thru Aug 2002) Communications Cables
UL 467	(2004) Grounding and Bonding Equipment
UL 50	(1995; Rev thru Sep 2003) Enclosures for Electrical Equipment
UL 514C	(1996; Rev thru Nov 2002) Nonmetallic Outlet Boxes, Flush-Device Boxes, and Covers
UL 969	(1995; Rev thru Nov 2001) Marking and Labeling Systems

1.2 RELATED REQUIREMENTS

Section 16402 INTERIOR DISTRIBUTION SYSTEM and Section 16711 TELECOMMUNICATIONS, OUTSIDE PLANT, apply to this section with additions and modifications specified herein.

1.3 DEFINITIONS

Unless otherwise specified or indicated, electrical and electronics terms used in this specification shall be as defined in EIA TIA/EIA-568-B.1, EIA TIA/EIA-568-B.2, EIA TIA/EIA-568-B.3, EIA TIA/EIA-569-A, EIA TIA/EIA-606-A and IEEE Std 100 and herein.

1.3.1 Campus Distributor (CD)

A distributor from which the campus backbone cabling emanates. (International expression for main cross-connect (MC).)

1.3.2 Building Distributor (BD)

A distributor in which the building backbone cables terminate and at which

connections to the campus backbone cables may be made. (International expression for intermediate cross-connect (IC).)

1.3.3 Floor Distributor (FD)

A distributor used to connect horizontal cable and cabling subsystems or equipment. (International expression for horizontal cross-connect (HC).)

1.3.4 Telecommunications Room (TR)

An enclosed space for housing telecommunications equipment, cable, terminations, and cross-connects. The room is the recognized cross-connect between the backbone cable and the horizontal cabling.

1.3.5 Entrance Facility (EF) (Telecommunications)

An entrance to the building for both private and public network service cables (including antennae) including the entrance point at the building wall and continuing to the entrance room or space.

1.3.6 Entrance Room (ER) (Telecommunications)

A centralized space for telecommunications equipment that serves the occupants of a building. Equipment housed therein is considered distinct from a telecommunications room because of the nature of its complexity.

1.3.7 Open Cable

Cabling that is not run in a raceway as defined by NFPA 70. This refers to cabling that is "open" to the space in which the cable has been installed and is therefore exposed to the environmental conditions associated with that space.

1.3.8 Open Office

A floor space division provided by furniture, moveable partitions, or other means instead of by building walls.

1.3.9 Pathway

A physical infrastructure utilized for the placement and routing of telecommunications cable.

1.4 SYSTEM DESCRIPTION

The building telecommunications cabling and pathway system shall include permanently installed backbone and horizontal cabling, horizontal and backbone pathways, service entrance facilities, work area pathways, telecommunications outlet assemblies, conduit, raceway, and hardware for splicing, terminating, and interconnecting cabling necessary to transport telephone and data (including LAN) between equipment items in a building. The horizontal system shall be wired in a star topology from the telecommunications work area to the floor distributor or campus distributor at the center or hub of the star. The backbone cabling and pathway system includes intrabuilding and interbuilding interconnecting cabling, pathway, and terminal hardware. The intrabuilding backbone provides connectivity from the floor distributors to the building distributors or to the campus distributor and from the building distributors to the campus distributor as required.. The backbone system shall be wired in a star topology with the

campus distributor at the center or hub of the star. The interbuilding backbone system provides connectivity between the campus distributors and is specified in Section 16711, TELECOMMUNICATIONS OUTSIDE PLANT. Provide telecommunications pathway systems referenced herein as specified in Section 16402 INTERIOR DISTRIBUTION SYSTEM.

1.5 SUBMITTALS

Government approval is required for submittals with a "G" designation; submittals not having a "G" designation are for information only. When used, a designation following the "G" designation identifies the office that will review the submittal for the Government. The following shall be submitted in accordance with Section 01330 SUBMITTAL PROCEDURES:

SD-02 Shop Drawings

Telecommunications drawings; G TAC

Telecommunications Space Drawings; G TAC

In addition to Section 01330 SUBMITTAL PROCEDURES, provide shop drawings in accordance with paragraph SHOP DRAWINGS.

SD-03 Product Data

Telecommunications cabling (backbone and horizontal); G TAC

Patch panels; G TAC

Telecommunications outlet/connector assemblies; G TAC

Equipment support frame; G TAC

Connector blocks; G TAC

Spare Parts; G TAC

Submittals shall include the manufacturer's name, trade name, place of manufacture, and catalog model or number. Include performance and characteristic curves. Submittals shall also include applicable federal, military, industry, and technical society publication references. Should manufacturer's data require supplemental information for clarification, the supplemental information shall be submitted as specified in paragraph REGULATORY REQUIREMENTS and as required in Section 01330 SUBMITTAL PROCEDURES.

SD-06 Test Reports

Telecommunications cabling testing; G TAC

SD-07 Certificates

Telecommunications Contractor Qualifications; G TAC

Key Personnel Qualifications; G TAC

Manufacturer Qualifications; G TAC

Test plan; G TAC

SD-09 Manufacturer's Field Reports

Factory reel tests; G TAC

SD-11 Closeout Submittals

Record Documentation; G TAC

1.6 QUALITY ASSURANCE

1.6.1 Shop Drawings

In exception to Section 01330, SUBMITTAL PROCEDURES, submit shop drawings a minimum of 355 by 510 mm (14 by 20 inches) in size using a minimum scale of one mm per 100 mm (1/8 inch per foot) except as specified otherwise. Include wiring diagrams and installation details of equipment indicating proposed location, layout and arrangement, control panels, accessories, piping, ductwork, and other items that must be shown to ensure a coordinated installation. Wiring diagrams shall identify circuit terminals and indicate the internal wiring for each item of equipment and the interconnection between each item of equipment. Drawings shall indicate adequate clearance for operation, maintenance, and replacement of operating equipment devices. Submittals shall include the nameplate data, size, and capacity. Submittals shall also include applicable federal, military, industry, and technical society publication references.

1.6.1.1 Telecommunications Drawings

Provide drawings in accordance with EIA TIA/EIA-606-A. The identifier for each termination and cable shall appear on the drawings. Drawings shall depict final telecommunications installed wiring system infrastructure in accordance with EIA TIA/EIA-606-A. The drawings should provide details required to prove that the distribution system shall properly support connectivity from the EF telecommunications and ER telecommunications, CD's, BD's, and FD's to the telecommunications work area outlets. The following drawings shall be provided as a minimum:

a. T1 - Layout of complete building per floor - Building Area/Serving Zone Boundaries, Backbone Systems, and Horizontal Pathways. Layout of complete building per floor. The drawing indicates ocation of building areas, serving zones, vertical backbone diagrams, telecommunications rooms, access points, pathways, grounding system, and other systems that need to be viewed from the complete building perspective.

b. T2 - Serving Zones/Building Area Drawings - Drop Locations and Cable Identification (ID’S). Shows a building area or serving zone. These drawings show drop locations, telecommunications rooms, access points and detail call outs for common equipment rooms and other congested areas.

c. T4 - Typical Detail Drawings - Faceplate Labeling, Firestopping, Americans with Disabilities Act (ADA), Safety, Department of Transportation (DOT). Detailed drawings of symbols and typicals such as faceplate labeling, faceplate types, faceplate population installation procedures, detail racking, and raceways.

1.6.1.2 Telecommunications Space Drawings

Provide T3 drawings in accordance with EIA TIA/EIA-606-A that include telecommunications rooms plan views, pathway layout (cable tray, racks, ladder-racks, etc.), mechanical/electrical layout, and cabinet, rack, backboard and wall elevations. Drawings shall show layout of applicable equipment including incoming cable stub or connector blocks, building protector assembly, outgoing cable connector blocks, patch panels and equipment spaces and cabinet/racks. Drawings shall include a complete list of equipment and material, equipment rack details, proposed layout and anchorage of equipment and appurtenances, and equipment relationship to other parts of the work including clearance for maintenance and operation. Drawings may also be an enlargement of a congested area of T1 or T2 drawings.

1.6.2 Telecommunications Qualifications

Work under this section shall be performed by and the equipment shall be provided by the approved telecommunications contractor and key personnel. Qualifications shall be provided for: the telecommunications system contractor, the telecommunications system installer, and the supervisor (if different from the installer). A minimum of 30 days prior to installation, submit documentation of the experience of the telecommunications contractor and of the key personnel.

1.6.2.1 Telecommunications Contractor

The telecommunications contractor shall be a firm which is regularly and professionally engaged in the business of the applications, installation, and testing of the specified telecommunications systems and equipment. The telecommunications contractor shall demonstrate experience in providing successful telecommunications systems within the past 5 years. Submit documentation for a minimum of three and a maximum of five successful telecommunication system installations for the telecommunications contractor.

1.6.2.2 Key Personnel

Provide key personnel who are regularly and professionally engaged in the business of the application, installation and testing of the specified telecommunications systems and equipment. There may be one key person or more key persons proposed for this solicitation depending upon how many of the key roles each has successfully provided. Each of the key personnel shall demonstrate experience in providing successful telecommunications systems within the past 3 years.

Supervisors and installers assigned to the installation of this system or any of its components shall be Building Industry Consulting Services International (BICSI) Registered Cabling Installers, Technician Level. Submit documentation of current BICSI certification for each of the key personnel.

In lieu of BICSI certification, supervisors and installers assigned to the installation of this system or any of its components shall have a minimum of 5 years experience in the installation of the specified copper and fiber optic cable and components. They shall have factory or factory approved certification from each equipment manufacturer indicating that they are qualified to install and test the provided products. Submit documentation for a minimum of three and a maximum of five successful telecommunication

system installations for each of the key personnel. Documentation for each key person shall include at least two successful system installations provided that are equivalent in system size and in construction complexity to the telecommunications system proposed for this solicitation. Include specific experience in installing and testing telecommunications systems and provide the names and locations of at least two project installations successfully completed using optical fiber and copper telecommunications cabling systems. All of the existing telecommunications system installations offered by the key persons as successful experience shall have been in successful full-time service for at least 18 months prior to the issuance date for this solicitation. Provide the name and role of the key person, the title, location, and completed installation date of the referenced project, the referenced project owner point of contact information including name, organization, title, and telephone number, and generally, the referenced project description including system size and construction complexity.

Indicate that all key persons are currently employed by the telecommunications contractor, or have a commitment to the telecommunications contractor to work on this project. All key persons shall be employed by the telecommunications contractor at the date of issuance of this solicitation, or if not, have a commitment to the telecommunications contractor to work on this project by the date that the bid was due to the Contracting Officer.

Note that only the key personnel approved by the Contracting Officer in the successful proposal shall do work on this solicitation's telecommunications system. Key personnel shall function in the same roles in this contract, as they functioned in the offered successful experience. Any substitutions for the telecommunications contractor's key personnel requires approval from The Contracting Officer.

1.6.2.3 Minimum Manufacturer Qualifications

Cabling, equipment and hardware manufacturers shall have a minimum of 3 years experience in the manufacturing, assembly, and factory testing of components which comply with EIA TIA/EIA-568-B.1, EIA TIA/EIA-568-B.2 and EIA TIA/EIA-568-B.3.

1.6.3 Test Plan

Provide a complete and detailed test plan for the telecommunications cabling system including a complete list of test equipment for the UTP and optical fiber components and accessories 60 days prior to the proposed test date. Include procedures for certification, validation, and testing.

1.6.4 Regulatory Requirements

In each of the publications referred to herein, consider the advisory provisions to be mandatory, as though the word, "shall" had been substituted for "should" wherever it appears. Interpret references in these publications to the "authority having jurisdiction," or words of similar meaning, to mean the Contracting Officer. Equipment, materials, installation, and workmanship shall be in accordance with the mandatory and advisory provisions of NFPA 70 unless more stringent requirements are specified or indicated.

1.6.5 Standard Products

Provide materials and equipment that are products of manufacturers regularly engaged in the production of such products which are of equal material, design and workmanship. Products shall have been in satisfactory commercial or industrial use for 2 years prior to bid opening. The 2-year period shall include applications of equipment and materials under similar circumstances and of similar size. The product shall have been on sale on the commercial market through advertisements, manufacturers' catalogs, or brochures during the 2-year period. Where two or more items of the same class of equipment are required, these items shall be products of a single manufacturer; however, the component parts of the item need not be the products of the same manufacturer unless stated in this section.

1.6.5.1 Alternative Qualifications

Products having less than a 2-year field service record will be acceptable if a certified record of satisfactory field operation for not less than 6000 hours, exclusive of the manufacturers' factory or laboratory tests, is furnished.

1.6.5.2 Material and Equipment Manufacturing Date

Products manufactured more than 3 years prior to date of delivery to site shall not be used, unless specified otherwise.

1.7 DELIVERY AND STORAGE

Provide protection from weather, moisture, extreme heat and cold, dirt, dust, and other contaminants for telecommunications cabling and equipment placed in storage.

1.8 ENVIRONMENTAL REQUIREMENTS

Connecting hardware shall be rated for operation under ambient conditions of 0 to 60 degrees C (32 to 140 degrees F) and in the range of 0 to 95 percent relative humidity, noncondensing.

1.9 WARRANTY

The equipment items shall be supported by service organizations which are reasonably convenient to the equipment installation in order to render satisfactory service to the equipment on a regular and emergency basis during the warranty period of the contract.

1.10 MAINTENANCE

1.10.1 Operation and Maintenance Manuals

Commercial off the shelf manuals shall be furnished for operation, installation, configuration, and maintenance of products provided as a part of the telecommunications cabling and pathway system. In addition to requirements of Section 01060 SPECIAL CLAUSES, include the requirements of paragraphs TELECOMMUNICATIONS DRAWINGS, TELECOMMUNICATIONS SPACE DRAWINGS, and RECORD DOCUMENTATION.

1.10.2 Record Documentation

Provide T5 drawings including documentation on cables and termination

hardware in accordance with EIA TIA/EIA-606-A. T5 drawings shall include schedules to show information for cut-overs and cable plant management, patch panel layouts and cover plate assignments, cross-connect information and connecting terminal layout as a minimum. T5 drawings shall be provided in hard copy format. Provide the following T5 drawing documentation as a minimum:

a. Cables - A record of installed cable shall be provided in accordance with EIA TIA/EIA-606-A. The cable records shall include the required data fields for each cable and complete end-to-end circuit report for each complete circuit from the assigned outlet to the entry facility in accordance with EIA TIA/EIA-606-A. Include manufacture date of cable with submittal.

b. Termination Hardware - A record of installed patch panels, cross-connect points, distribution frames, terminating block arrangements and type, and outlets shall be provided in accordance with EIA TIA/EIA-606-A. Documentation shall include the required data fields as a minimum in accordance with EIA TIA/EIA-606-A.

1.10.3 Spare Parts

In addition to the requirements of Section 01781, OPERATION AND MAINTENANCE DATA, provide a complete list of parts and supplies, with current unit prices and source of supply, and a list of spare parts recommended for stocking.

PART 2 PRODUCTS

2.1 COMPONENTS

UL or third party certified. Where equipment or materials are specified to conform to industry and technical society reference standards of the organizations, submit proof of such compliance. The label or listing by the specified organization will be acceptable evidence of compliance. In lieu of the label or listing, submit a certificate from an independent testing organization, competent to perform testing, and approved by the Contracting Officer. The certificate shall state that the item has been tested in accordance with the specified organization's test methods and that the item complies with the specified organization's reference standard. Provide a complete system of telecommunications cabling and pathway components using star topology. Provide support structures and pathways, complete with outlets, cables, connecting hardware and telecommunications cabinets/racks. Cabling and interconnecting hardware and components for telecommunications systems shall be UL listed or third party independent testing laboratory certified, and shall comply with NFPA 70 and conform to the requirements specified herein.

2.2 TELECOMMUNICATIONS PATHWAY

Provide telecommunications pathways in accordance with EIA TIA/EIA-569-A and as specified in Section 16402 INTERIOR DISTRIBUTION SYSTEM.

2.3 TELECOMMUNICATIONS CABLING

Cabling shall be UL listed for the application and shall comply with EIA TIA/EIA-568-B.1, EIA TIA/EIA-568-B.2, EIA TIA/EIA-568-B.3 and NFPA 70. Provide a labeling system for cabling as required by EIA TIA/EIA-606-A and

UL 969. Ship cable on reels or in boxes bearing manufacture date for UTP in accordance with ICEA S-90-661 and optical fiber cables in accordance with ICEA S-83-596 for all cable used on this project. Cabling manufactured more than 12 months prior to date of installation shall not be used.

2.3.1 Horizontal Cabling

Provide horizontal cable in compliance with NFPA 70 and performance characteristics in accordance with EIA TIA/EIA-568-B.1.

2.3.1.1 Horizontal Copper

Provide horizontal copper cable in accordance with EIA TIA/EIA-568-B.2, UL 444, UTP (unshielded twisted pair), 100 ohm. Provide four each individually twisted pair, 24 AWG conductors, Category 5e, with a blue thermoplastic jacket. Cable shall be imprinted with manufacturers name or identifier, flammability rating, gauge of conductor, transmission performance rating (category designation) at regular intervals not to exceed 1 meter (3.3 feet). The word "METER" or the abbreviation "M" shall appear after each length marking. Provide communications general purpose (CM or CMG), communications plenum (CMP) or communications riser (CMR) rated cabling in accordance with NFPA 70. Type CMP and CMR may be substituted for type CM or CMG and type CMP may be substituted for type CMR in accordance with NFPA 70.

2.3.1.2 Horizontal Coaxial Cable

The coaxial cable shall be 75 ohm, RG 6 with an 18 AWG copper clad steel conductor, polyethylene outer insulation, 2.8 mil aluminum shield, 60% inner braid made of 34 AWG aluminum. The maximum attenuation shall be 5.2 dB @ 55 mHz, 10.1 dB @ 211 mHz, 11.4 dB @ 270 mHz, 12.7 dB @ 330 mHz, 14.1 dB @ 350 mHz, 15 dB @ 450, 15.8 @ 500 mHz, 16.7 dB @ 550 mHz, 17.5 dB @ 600 mHz, 19.6 dB @ 750 mHz, 21.3 dB @ 870 mHz, and 22.9 dB @ 1000 mHz.

2.4 TELECOMMUNICATIONS SPACES

Provide connecting hardware and termination equipment in the telecommunication communications cabinet (TCC) to facilitate installation as shown on design drawings for terminating and cross-connecting permanent cabling. Provide telecommunications interconnecting hardware color coding in accordance with EIA TIA/EIA-606-A.

2.4.1 Backboards for Wall Mounted Components Not in TCCs

Provide void-free, interior grade plywood 19 mm thick 1200 by 2400 mm . Backboards shall be fire rated. Do not cover the fire stamp on the backboard. Backboards shall be mounted 305 mm above finished floor and 305 mm below the ceiling.

2.4.2 Equipment Support Frame

Provide in accordance with EIA-310-D and UL 50.

a. Bracket, wall mounted, 11 gauge steel. Provide hinged swing down bracket compatible with 482.6 mm. Bracket shall be capable of holding 27.2 kg and be 8 units high.

b. Racks, floor mounted welded steel construction , minimum, treated

to resist corrosion. Provide rack with vertical and horizontal cable management channels, top and bottom cable troughs, grounding lug and a power strip with 9 receptacles. Rack shall be compatible with 482.6 mm panel mounting hardware.

2.4.3 Connector Blocks

Provide insulation displacement connector (IDC) Type 110 for Category 5e and higher. Provide blocks for the number of horizontal and backbone cables terminated on the block plus 25 percent spare.

2.4.4 Cable Guides

Provide cable guides specifically manufactured for the purpose of routing cables, wires and patch cords horizontally and vertically on 482.6 mm equipment racks. Cable guides of ring or bracket type devices mounted on backboard for horizontal cable management and individually mounted for vertical cable management. Mount cable guides with screws, and or nuts and lockwashers.

2.4.5 Patch Panels

Provide a minimum 24 port patch panel. Provide pre-connectorized RJ45-RJ45 copper patch cords for patch panels. Provide patch cords, as complete assemblies, with matching connectors. Patch cords shall meet minimum performance requirements specified in EIA TIA/EIA-568-B.1, EIA TIA/EIA-568-B.2 and EIA TIA/EIA-568-B.3 for cables, cable length and hardware specified. Provide one (1) patch cord per patch panel port.

2.4.5.1 Modular to 110 Block Patch Panel

Provide in accordance with EIA TIA/EIA-568-B.1 and EIA TIA/EIA-568-B.2. Panels shall be third party verified and shall comply with EIA/TIA Category 5e requirements. Panel shall be constructed of 2.2 mm (0.09 inch) minimum aluminum and shall be compatible with an EIA-310-D 482.6 mm equipment rails. Panel shall provide 24 non-keyed, 8-pin modular ports, wired to T568A. Patch panels shall terminate the building cabling on Type 110 IDCs and shall utilize a printed circuit board interface. The rear of each panel shall have incoming cable strain-relief and routing guides. Panels shall have each port factory numbered and be equipped with laminated plastic nameplates above each port. The patch panel shall be mounted on a swing down bracket.

2.4.5.2 Fiber Optic Patch Panel

See Section 16711 TELECOMMUNICATIONS OUTSIDE PLANT (OSP).

2.4.6 Coax Patch Panel

The coax patch panel shall be a minimu 16 port, 16 gauge steel, with 16, keystone module, type F female connectors. The coax panel shall be mounted on a swing down bracket. There shall be one coax patch cords, RG 6 Type F female per patch panel port. Commercial quality, signal splitters shall be provided and mounted to the backboard. One splitter port per patch panel port.

2.5 TELECOMMUNICATIONS OUTLET/CONNECTOR ASSEMBLIES

2.5.1 Outlet/Connector Copper

Outlet/connectors shall comply with FCC Part 68EIA TIA/EIA-568-B.1, and EIA TIA/EIA-568-B.2. UTP outlet/connectors shall be UL 1863 listed, non-keyed, 8-pin modular, constructed of high impact rated thermoplastic housing and shall be third party verified and shall comply with EIA TIA/EIA-568-B.2 Category 5e. Outlet/connectors provided for UTP cabling shall meet or exceed the requirements for the cable provided. Outlet/connectors shall be terminated using a Type 110 IDC PC board connector, color-coded for both T568A and T568B wiring. Each outlet/connector shall be wired T568A. UTP outlet/connectors shall comply with EIA TIA/EIA-568-B.2 for 200 mating cycles. The standard outlet configuration shall be a dual plate with either one, RJ45, Cat 5e keystone module and a blank or two RJ45 Cat 5e modules. The drawing indicates the configuration. Wall plates shall be stainless steel with mounting lugs and shall utilize the same keystone RJ45 module as the normal outlets.

2.5.2 Optical Fiber Adapters

Provide optical fiber adapters suitable for duplex SC in accordance with EIA TIA/EIA-604-3A with zirconia ceramic alignment sleeves,. Provide dust cover for adapters. Optical fiber adapters shall comply with EIA TIA-455-21-A for 500 mating cycles.

2.5.3 Optical Fiber Connectors

Provide in accordance with EIA TIA-455-21-A. Optical fiber connectors shall be duplex SC in accordance with EIA TIA/EIA-604-3A with zirconia ceramic ferrule, epoxyless compatible with 125 um single-mode fiber.

2.5.4 Coax Connectors

The coax connectors shall be keystone module, type F female and be mounted in a single gang, duplex plate with one filler plate.

2.5.5 Cover Plates

Telecommunications cover plates shall comply with UL 514C, and EIA TIA/EIA-568-B.1, EIA TIA/EIA-568-B.2, EIA TIA/EIA-568-B.3; flush design constructed of high impact thermoplastic material ivory in color. Provide labeling in accordance with the paragraph LABELING in this section. The outplate shall be duplex plates. Wall phone plates shall be stainless steel with phone mounting lugs.

2.6 TERMINAL CABINETS

Construct of zinc-coated sheet steel, 762 by 610 by 610 mm . Trim shall be fitted with hinged door and locking latch. Doors shall be maximum size openings to box interiors. Boxes shall be provided with 16 mm (5/8 inch) backboard with two-coat varnish finish. Match trim, hardware, doors, and finishes with panelboards. Provide label and identification systems for telecommunications wiring and components consistent with EIA TIA/EIA-606-A. Each cabinet shall be equipped with a hasp and lock. All locks shall be keyed the same.

2.7 GROUNDING AND BONDING PRODUCTS

Provide in accordance with UL 467, TIA J-STD-607-A, and NFPA 70. Components shall be identified as required by EIA TIA/EIA-606-A. Provide ground rods, bonding conductors, and grounding busbars as specified in Section 16402, INTERIOR DISTRIBUTION SYSTEM.

2.8 FIRESTOPPING MATERIAL

Provide as specified in Section 07840, FIRESTOPPING.

2.9 MANUFACTURER'S NAMEPLATE

Each item of equipment shall have a nameplate bearing the manufacturer's name, address, model number, and serial number securely affixed in a conspicuous place; the nameplate of the distributing agent will not be acceptable.

2.10 FIELD FABRICATED NAMEPLATES

ASTM D 709. Provide laminated plastic nameplates for each equipment enclosure, relay, switch, and device; as specified or as indicated on the drawings. Each nameplate inscription shall identify the function and, when applicable, the position. Nameplates shall be melamine plastic, 3 mm (0.125 inch) thick, white with black center core. Surface shall be matte finish. Corners shall be square. Accurately align lettering and engrave into the core. Minimum size of nameplates shall be 25 by 65 mm (one by 2.5 inches). Lettering shall be a minimum of 6.35 mm (0.25 inch) high normal block style.

2.11 TESTS, INSPECTIONS, AND VERIFICATIONS

2.11.1 Factory Reel Tests

Provide documentation of the testing and verification actions taken by manufacturer to confirm compliance with EIA TIA/EIA-568-B.1, EIA TIA/EIA-568-B.3, EIA TIA/EIA-526-7 for single mode optical fiber cables.

PART 3 EXECUTION

3.1 INSTALLATION

Install telecommunications cabling and pathway systems, including the horizontal and backbone cable, pathway systems, telecommunications outlet/connector assemblies, and associated hardware in accordance with EIA TIA/EIA-568-B.1, EIA TIA/EIA-568-B.2, EIA TIA/EIA-568-B.3, EIA TIA/EIA-569-A, NFPA 70, and UL standards as applicable. Provide cabling in a star topology network. Provide residential cabling in a star wiring architecture from the distribution device as required by EIA TIA/EIA-570-B. Pathways and outlet boxes shall be installed as specified in Section 16402 INTERIOR DISTRIBUTION SYSTEM.

3.1.1 Cabling

Install Category 5e UTP, telecommunications cabling system as detailed in EIA TIA/EIA-568-B.1, EIA TIA/EIA-568-B.2, and EIA TIA/EIA-568-B.3. Screw terminals shall not be used except where specifically indicated on plans. Use an approved insulation displacement connection (IDC) tool kit for copper cable terminations. Do not untwist Category 5e UTP cables more than

12 mm (1/2 inch) from the point of termination to maintain cable geometry. Provide service loop on each end of the cable, 3 m in the telecommunications room, and 304 mm (12 inches) in the work area outlet. Do not exceed manufacturers' cable pull tensions for copper and optical fiber cables. Provide a device to monitor cable pull tensions. Do not exceed 110 N (25 pounds) pull tension for four pair copper cables. Do not chafe or damage outer jacket materials. Use only lubricants approved by cable manufacturer. Do not over cinch cables, or crush cables with staples. For UTP cable, bend radii shall not be less than four times the cable diameter. Cables shall be terminated; no cable shall contain unterminated elements. Cables shall not be spliced. Label cabling in accordance with paragraph LABELING in this section.

3.1.1.1 Horizontal Cabling

Install horizontal cabling as indicated on drawings between the TCC and the telecommunications outlet assemblies at workstations.

3.1.2 Pathway Installations

Provide in accordance with EIA TIA/EIA-569-A and NFPA 70. Provide building pathway as specified in Section 16402, INTERIOR DISTRIBUTION SYSTEMS.

3.1.3 Service Entrance Conduit, Overhead

Provide service entrance overhead as specified on the drawings.

3.1.4 Service Entrance Conduit, Underground

Provide service entrance underground as specified on the drawings.

3.1.5 Cable Tray Installation

Install cable tray as specified in Section 16402 INTERIOR DISTRIBUTION SYSTEMS. Only CMP and OFNP type cable shall be installed in a plenum.

3.1.6 Work Area Outlets

3.1.6.1 Terminations

Terminate UTP cable in accordance with EIA TIA/EIA-568-B.1, EIA TIA/EIA-568-B.2 and wiring configuration as specified.

3.1.6.2 Cover Plates

As a minimum, each outlet/connector shall be labeled as to its function and a unique number to identify cable link in accordance with the paragraph LABELING in this section.

3.1.6.3 Cables

Unshielded twisted pair and fiber optic cables shall have a minimum of 304 mm of slack cable loosely coiled into the telecommunications outlet boxes. Minimum manufacturer's bend radius for each type of cable shall not be exceeded.

3.1.6.4 Pull Cords

Pull cords shall be installed in conduit serving telecommunications outlets

that do not have cable installed.

3.1.7 Telecommunications Space Termination

Install termination hardware required for Category 5e system. An insulation displacement tool shall be used for terminating copper cable to insulation displacement connectors.

3.1.7.1 Connector Blocks

Connector blocks shall be wall mounted in orderly rows and columns. Adequate vertical and horizontal wire routing areas shall be provided between groups of blocks. Install in accordance with industry standard wire routing guides in accordance with EIA TIA/EIA-569-A.

3.1.7.2 Patch Panels

Patch panels shall be mounted on the plywood backboard as specified on the drawings..

a. Copper Patch Panel. Copper cable entering a patch panel shall be secured to the panel with cable ties or as recommended by the manufacturer to prevent movement of the cable.

b. Fiber Optic Patch Panel. Fiber optic cable loop shall be 1000 mm in length. The outer jacket of each cable entering a patch panel shall be secured to the panel to prevent movement of the fibers within the panel, using clamps or brackets specifically manufactured for that purpose.

3.1.7.3 Equipment Support Frames

Install in accordance with EIA TIA/EIA-569-A:

a. Bracket, wall mounted. Mount bracket to plywood backboard in accordance with manufacturer's recommendations. Mount rack so height of highest panel does not exceed 1980 mm (78 inches) above floor.

b. Racks, floor mounted modular type. Permanently anchor rack to the floor in accordance with manufacturer's recommendations.

c. Cabinets, freestanding modular type. When cabinets are connected together, remove adjoining side panels for cable routing between cabinets. Mount rack mounted fan in roof and base of cabinet.

d. Cabinets, wall-mounted modular type. Mount cabinet to plywood backboard in accordance with manufacturer's recommendations. Mount cabinet so height of highest panel does not exceed 1980 mm above floor.

3.1.8 Electrical Penetrations

Seal openings around electrical penetrations through fire resistance-rated wall, partitions, floors, or ceilings as specified in Section 07840, FIRESTOPPING.

3.1.9 Grounding and Bonding

Provide in accordance with TIA J-STD-607-A, NFPA 70 and as specified in Section 16402 INTERIOR DISTRIBUTION SYSTEMS.

3.2 LABELING

3.2.1 Labels

Provide labeling in accordance with EIA TIA/EIA-606-A. Handwritten labeling is unacceptable. Stenciled lettering for voice and data circuits shall be provided using thermal ink transfer process or laser printer.

3.2.2 Cable

Cables shall be labeled using color labels on both ends with identifiers in accordance with EIA TIA/EIA-606-A.

3.2.3 Termination Hardware

Workstation outlets and patch panel connections shall be labeled using color coded labels with identifiers in accordance with EIA TIA/EIA-606-A.

3.3 FIELD APPLIED PAINTING

Paint electrical equipment as required to match finish of adjacent surfaces or to meet the indicated or specified safety criteria. Painting shall be as specified in Section 09900 PAINTS AND COATINGS.

3.4 FIELD FABRICATED NAMEPLATE MOUNTING

Provide number, location, and letter designation of nameplates as indicated. Fasten nameplates to the device with a minimum of two sheet-metal screws or two rivets.

3.5 TESTING

3.5.1 Telecommunications Cabling Testing

Perform telecommunications cabling inspection, verification, and performance tests in accordance with EIA TIA/EIA-568-B.1, EIA TIA/EIA-568-B.2, EIA TIA/EIA-568-B.3.

3.5.1.1 Inspection

Visually inspect UTP and optical fiber jacket materials for UL or third party certification markings. Inspect cabling terminations in telecommunications rooms and at workstations to confirm color code for T568A or T568B pin assignments, and inspect cabling connections to confirm compliance with EIA TIA/EIA-568-B.1, EIA TIA/EIA-568-B.2, and EIA TIA/EIA-568-B.3. Visually confirm Category 5e marking of outlets, cover plates, outlet/connectors, and patch panels.

3.5.1.2 Verification Tests

UTP backbone copper cabling shall be tested for DC loop resistance, shorts, opens, intermittent faults, and polarity between conductors, and between conductors and shield, if cable has overall shield. Test operation of shorting bars in connection blocks. Test cables after termination but not

cross-connected.

3.5.1.3 Performance Tests

Perform testing for each outlet and MUTOA as follows:

Perform Category 5e link tests in accordance with EIA TIA/EIA-568-B.1 and EIA TIA/EIA-568-B.2. Tests shall include wire map, length, insertion loss, NEXT, PSNEXT, ELFEXT, PSELFEXT, return loss, propagation delay and delay skew.

3.5.1.4 Final Verification Tests

Perform verification tests for UTP systems after the complete telecommunications cabling and workstation outlet/connectors are installed.

a. Voice Tests. These tests assume that dial tone service has been installed. Connect to the network interface device at the demarcation point. Go off-hook and listen and receive a dial tone. If a test number is available, make and receive a local, long distance, and DSN telephone call.

b. Data Tests. These tests assume the Information Technology Staff has a network installed and are available to assist with testing. Connect to the network interface device at the demarcation point. Log onto the network to ensure proper connection to the network.

-- End of Section --

SECTION 16711

TELECOMMUNICATIONS OUTSIDE PLANT (OSP)

PART 1 GENERAL

1.1 REFERENCES

The publications listed below form a part of this specification to the extent referenced. The publications are referred to in the text by the basic designation only.

ASTM INTERNATIONAL (ASTM)

ASTM B 1	(2001) Hard-Drawn Copper Wire
ASTM B 8	(2004) Concentric-Lay-Stranded Copper Conductors, Hard, Medium-Hard, or Soft
ASTM D 709	(2001) Laminated Thermosetting Materials

ELECTRONIC INDUSTRIES ALLIANCE (EIA)

EIA TIA/EIA-455-107A	(1999) Component Reflectance or Link/System Return Loss using a Loss Test Set
EIA TIA/EIA-455-59A	(2000) FOTP-59 Measurement of Fiber Point Discontinuities Using an OTDR
EIA TIA/EIA-455-61A	(2000) FOTP-61 Measurement of Fiber or Cable Attenuation Using an OTDR
EIA TIA/EIA-526-7	(1998) OFSTP-7 Measurement of Optical Power Loss of Installed Single-Mode Fiber Cable Plant (ANSI/TIA/EIA-526-7)
EIA TIA/EIA-568-B.1	(2001; Addendum 2001) Commercial Building Telecommunications Cabling Standard - Part 1: General Requirements (ANSI/TIA/EIA-568-B.1)
EIA TIA/EIA-568-B.2	(2001) Commercial Building Telecommunications Cabling Standard - Part 2: Balanced Twisted Pair Cabling Components (ANSI/TIA/EIA-568-B.2)
EIA TIA/EIA-568-B.3	(2000; Addendum 2002) Optical Fiber Cabling Components Standard (ANSI/TIA/EIA-568-B.3)
EIA TIA/EIA-569-A	(1998; Addenda 2000, 2001) Commercial Building Standards for Telecommunications Pathways and Spaces (ANSI/TIA/EIA-569-A)
EIA TIA/EIA-590-A	(1997) Standard for Physical Location and Protection of Below Ground Fiber Optic

	Cable Plant
EIA TIA/EIA-606-A	(2002) Administration Standard for the Telecommunications Infrastructure (ANSI/TIA/EIA-606)
EIA TIA/EIA-758	(1999; Addendum 1999) Customer-Owned Outside Plant Telecommunications Cabling Standard (ANSI/TIA/EIA-758)
TIA J-STD-607-A	(2002) Commercial Building Grounding (Earthing) and Bonding Requirements for Telecommunications

INSTITUTE OF ELECTRICAL AND ELECTRONICS ENGINEERS (IEEE)

IEEE C2	(2002) National Electrical Safety Code
IEEE Std 100	(2000) The Authoritave Dictionary of IEEE Standards Terms

INSULATED CABLE ENGINEERS ASSOCIATION (ICEA)

ICEA S-87-640	(1999) Fiber Optic Outside Plant Communications Cable
ICEA S-98-688	(1997) Broadband Twisted Pair, Telecommunications Cable Aircore, Polyolefin Insulated Copper Conductors
ICEA S-99-689	(1997) Broadband Twisted Pair Telecommunications Cable Filled, Polyolefin Insulated Copper Conductors

NATIONAL FIRE PROTECTION ASSOCIATION (NFPA)

NFPA 70	(2005) National Electrical Code

THE SOCIETY FOR PROTECTIVE COATINGS (SSPC)

SSPC SP 6	(2000) Commercial Blast Cleaning

U.S. DEPARTMENT OF AGRICULTURE (USDA)

RUS/REA Bull IP 344-2	(2007) Materials Acceptable for Use on Telecommunications Systems of RUS Borrower's
RUS 1755	Telecommunications Standards and Specifications for Materials, Equipment and Construction
RUS Bul 1753E-001	(1996) RUS General Specification for Digital Stored Program Controlled Central Office Equipment, RUS Form 522
RUS Bul 1753F-151	(2001) Specifications and Drawings for Construction of Underground Plant

RUS Bul 1753F-201	(1997) Acceptance Tests of Telecommunications Plant (PC-4)
RUS Bul 1753F-208	(1993) REA Specification for Filled Telephone Cables with Expanded Insulation (PE-89)
RUS Bul 1753F-401	(1995) Splicing Copper and Fiber Optic Cables (PC-2)
RUS/REA Bull 1753F-601	(1994) REA Specification for Filled Fiber Optic Cables (PE-90)
RUS Bul 1751F-643	(2002) Underground Plant Design
RUS Bul 1753F-644	(2002) Underground Plant Construction
RUS Bul 1751F-815	(1979) Electrical Protection of Outside Plant
RUS Bul 1753F-201	(1997) Acceptance Tests of Telecommunications Plant (PC-4)
RUS Bul 1753F-401	(1995) Splicing Copper and Fiber Optic Cables (PC-2)
RUS Bul 345-65	(1985) Shield Bonding Connectors (PE-65)

UNDERWRITERS LABORATORIES (UL)

UL 510	(2005) Polyvinyl Chloride, Polyethylene, and Rubber Insulating Tape
UL 83	(2003; Rev thru Mar 2004) Thermoplastic-Insulated Wires and Cables

1.2 RELATED REQUIREMENTS

[Section 16710, BUILDING TELECOMMUNICATIONS CABLING SYSTEM,][Section 16301N, OVERHEAD TRANSMISSION AND DISTRIBUTION,][and][Section 16302N, UNDERGROUND TRANSMISSION AND DISTRIBUTION][Section 16370A, ELECTRICAL DISTRIBUTION SYSTEM, AERIAL,][and][Section 16375A, ELECTRICAL DISTRIBUTION SYSTEM, UNDERGROUND] apply to this section with additions and modifications specified herein.

1.3 DEFINITIONS

Unless otherwise specified or indicated, electrical and electronics terms used in this specification shall be as defined in EIA TIA/EIA-568-B.1, EIA TIA/EIA-568-B.2, EIA TIA/EIA-568-B.3, EIA TIA/EIA-569-A, EIA TIA/EIA-606-A, and IEEE Std 100 and herein.

1.3.1 Campus Distributor (CD)

A distributor from which the campus backbone cabling emanates. (International expression for main cross-connect - (MC).)

1.3.2 Entrance Facility (EF) (Telecommunications)

An entrance to the building for both private and public network service cables (including antennae) including the entrance point at the building wall and continuing to the entrance room or space.

1.3.3 Entrance Room (ER) (Telecommunications)

A centralized space for telecommunications equipment that serves the occupants of a building. Equipment housed therein is considered distinct from a telecommunications room because of the nature of its complexity.

1.3.4 Building Distributor (BD)

A distributor in which the building backbone cables terminate and at which connections to the campus backbone cables may be made. (International expression for intermediate cross-connect - (IC).)

1.3.5 Pathway

A physical infrastructure utilized for the placement and routing of telecommunications cable.

1.4 SYSTEM DESCRIPTION

The telecommunications outside plant consists of cable, conduit, manholes, poles, etc. required to provide signal paths from the closest point of presence to the new facility, including free standing frames or backboards, interconnecting hardware, terminating cables, lightning and surge protection modules at the entrance facility. The work consists of providing, testing and making operational cabling, interconnecting hardware and lightning and surge protection necessary to form a complete outside plant telecommunications system for continuous use.

1.5 SUBMITTALS

Government approval is required for submittals with a "G" designation; submittals not having a "G" designation are for information only. When used, a designation following the "G" designation identifies the office that will review the submittal for the Government. The following shall be submitted in accordance with Section 01330 SUBMITTAL PROCEDURES:

SD-02 Shop Drawings

Telecommunications Outside Plant; G TAC

Telecommunications Entrance Facility Drawings; G TAC

In addition to Section 01330 SUBMITTAL PROCEDURES, provide shop drawings in accordance with paragraph SHOP DRAWINGS.

SD-03 Product Data

Fiber Optic Combination Units; G TAC

Wire and cable; G TAC

Cable splice closures, and connectors; G TAC
(Copper and fiber)

Closures; G TAC

Building protector assemblies; G TAC

Protector modules; G TAC

Main Distribution Frame; G TAC

MDF Blocks and Protectors; G TAC

Spare Parts; G TAC

Submittals shall include the manufacturer's name, trade name, place of manufacture, and catalog model or number. Submittals shall also include applicable federal, military, industry, and technical society publication references. Should manufacturer's data require supplemental information for clarification, the supplemental information shall be submitted as specified in paragraph REGULATORY REQUIREMENTS and as required for certificates in Section 01330 SUBMITTAL PROCEDURES.

SD-06 Test Reports

Pre-installation tests; G TAC

Acceptance tests; G TAC

Outside Plant Test Plan; G TAC

SD-07 Certificates

Telecommunications Contractor Qualifications; G TAC

Key Personnel Qualifications; G TAC

Minimum Manufacturer's Qualifications; G TAC

SD-08 Manufacturer's Instructions

Building protector assembly installation; G TAC

Fiber Optic Splices; G TAC

Submit instructions prior to installation.

SD-09 Manufacturer's Field Reports

Factory Reel Test Data; G TAC

SD-11 Closeout Submittals

Record Documentation; G TAC

In addition to other requirements, provide in accordance with paragraph RECORD DOCUMENTATION.

1.6 QUALITY ASSURANCE

1.6.1 Shop Drawings

Include wiring diagrams and installation details of equipment indicating proposed location, layout and arrangement, control panels, accessories, piping, ductwork, and other items that must be shown to ensure a coordinated installation. Wiring diagrams shall identify circuit terminals and indicate the internal wiring for each item of equipment and the interconnection between each item of equipment. Drawings shall indicate adequate clearance for operation, maintenance, and replacement of operating equipment devices. Submittals shall include the nameplate data, size, and capacity. Submittals shall also include applicable federal, military, industry, and technical society publication references.

1.6.1.1 Telecommunications Outside Plant Shop Drawings

Provide Outside Plant Design in accordance with RUS Bul 1751F-643, RUS Bul 1753F-151 and RUS Bul 1753F-644 for underground system design. Provide T0 shop drawings that show the physical and logical connections from the perspective of an entire campus, such as actual building locations, exterior pathways and campus backbone cabling on plan view drawings, major system nodes, and related connections on the logical system drawings in accordance with EIA TIA/EIA-606-A. Drawings shall include wiring and schematic diagrams for fiber optic and copper cabling and splices, copper conductor gauge and pair count, fiber pair count and type, pathway duct and innerduct arrangement, associated construction materials, and any details required to demonstrate that cable system has been coordinated and will properly support the switching and transmission system identified in specification and drawings. Provide Registered Communications Distribution Designer (RCDD) approved drawings of the telecommunications outside plant. Update existing telecommunication Outside Plant T0 drawings to include information modified, deleted or added as a result of this installation in accordance with EIA TIA/EIA-606-A. The telecommunications outside plant (OSP) shop drawings shall be included in the operation and maintenance manuals.

1.6.1.2 Telecommunications Entrance Facility Drawings

Provide T3 drawings for EF Telecommunications in accordance with EIA TIA/EIA-606-A that include telecommunications entrance facility plan views, pathway layout (cable tray, racks, ladder-racks, etc.), mechanical/electrical layout, and cabinet, rack, backboard and wall elevations. Drawings shall show layout of applicable equipment including incoming cable stub or connector blocks, building protector assembly, outgoing cable connector blocks, patch panels and equipment spaces and cabinet/racks. Drawings shall include a complete list of equipment and material, equipment rack details, proposed layout and anchorage of equipment and appurtenances, and equipment relationship to other parts of the work including clearance for maintenance and operation. Drawings may also be an enlargement of a congested area of T1 or T2 drawings. Provide T3 drawings for EF Telecommunications as specified in the paragraph TELECOMMUNICATIONS SPACE DRAWINGS of Section 16710, BUILDING TELECOMMUNICATIONS CABLING SYSTEMS. The telecommunications entrance facility shop drawings shall be included in the operation and maintenance manuals.

1.6.2 Telecommunications Qualifications

Work under this section shall be performed by and the equipment shall be provided by the approved telecommunications contractor and key personnel. Qualifications shall be provided for: the telecommunications system contractor, the telecommunications system installer, the supervisor (if different from the installer), and the cable splicing and terminating personnel. A minimum of 30 days prior to installation, submit documentation of the experience of the telecommunications contractor and of the key personnel.

1.6.2.1 Telecommunications Contractor Qualifications

The telecommunications contractor shall be a firm which is regularly and professionally engaged in the business of the applications, installation, and testing of the specified telecommunications systems and equipment. The telecommunications contractor shall demonstrate experience in providing successful telecommunications systems that include outside plant and broadband cabling within the past 3 years. Submit documentation for a minimum of three and a maximum of five successful telecommunication system installations for the telecommunications contractor. Each of the key personnel shall demonstrate experience in providing successful telecommunications systems in accordance with EIA TIA/EIA-758 within the past 3 years.

1.6.2.2 Key Personnel Qualifications

Provide key personnel who are regularly and professionally engaged in the business of the application, installation and testing of the specified telecommunications systems and equipment. There may be one key person or more key persons proposed for this solicitation depending upon how many of the key roles each has successfully provided.

Cable splicing and terminating personnel assigned to the installation of this system or any of its components shall have training in the proper techniques and have a minimum of 3 years experience in splicing and terminating the specified cables. Modular copper cable splices shall be performed by factory certified personnel for products used. Fiber optic splicers shall have seven (7) years experience in fusion splicing, five (5) years unsupervised experience with the brand of splicing machine and closure, and two (2) years with the model of the fusion splicing machine. The copper splice closures shall be installed by the copper splicers only. The copper splicers shall have a minimum of seven (7) years documented unsupervised experience in installation of the splice closures.

Supervisors and installers assigned to the installation of this system or any of its components shall have factory or factory approved certification from each equipment manufacturer indicating that they are qualified to install and test the provided products.

Submit documentation for a minimum of three and a maximum of five successful telecommunication system installations for each of the key personnel. Documentation for each key person shall include at least two successful system installations provided that are equivalent in system size and in construction complexity to the telecommunications system proposed for this solicitation. Include specific experience in installing and testing telecommunications outside plant systems, including broadband cabling, and provide the names and locations of at least two project installations successfully completed using optical fiber and copper

telecommunications cabling systems. All of the existing telecommunications system installations offered by the key persons as successful experience shall have been in successful full-time service for at least 18 months prior to the issuance date for this solicitation. Provide the name and role of the key person, the title, location, and completed installation date of the referenced project, the referenced project owner point of contact information including name, organization, title, and telephone number, and generally, the referenced project description including system size and construction complexity.

Indicate that all key persons are currently employed by the telecommunications contractor, or have a commitment to the telecommunications contractor to work on this project. All key persons shall be employed by the telecommunications contractor at the date of issuance of this solicitation, or if not, have a commitment to the telecommunications contractor to work on this project by the date that the bid was due to the Contracting Officer.

Note that only the key personnel approved by the Contracting Officer in the successful proposal shall do work on this solicitation's telecommunications system. Key personnel shall function in the same roles in this contract, as they functioned in the offered successful experience. Any substitutions for the telecommunications contractor's key personnel requires approval from The Contracting Officer.

1.6.2.3 Minimum Manufacturer's Qualifications

Cabling, equipment and hardware manufacturers shall have a minimum of 3 years experience in the manufacturing, assembly, and factory testing of components which comply with, EIA TIA/EIA-568-B.1, EIA TIA/EIA-568-B.2 and EIA TIA/EIA-568-B.3. In addition, cabling manufacturers shall have a minimum of 3 years experience in the manufacturing and factory testing of cabling which comply with ICEA S-87-640, ICEA S-98-688, and ICEA S-99-689.

1.6.3 Outside Plant Test Plan

Prepare and provide a complete and detailed test plan for field tests of the outside plant including a complete list of test equipment for the copper conductor and optical fiber cables, components, and accessories for approval by the Contracting Officer. Include a cut-over plan with procedures and schedules for relocation of facility station numbers without interrupting service to any active location. Submit the plan at least 60 days prior to tests for Contracting Officer approval. Provide outside plant testing and performance measurement criteria in accordance with RUS Bul 1753F-201. Include procedures for certification, validation, and testing that includes fiber optic link performance criteria.

1.6.4 Standard Products

Provide materials and equipment that are standard products of manufacturers regularly engaged in the production of such products which are of equal material, design and workmanship and shall be the manufacturer's latest standard design that has been in satisfactory commercial or industrial use for at least 2 years prior to bid opening. The 2-year period shall include applications of equipment and materials under similar circumstances and of similar size. The product shall have been on sale on the commercial market through advertisements, manufacturers' catalogs, or brochures during the 2 -year period. Products supplied shall be specifically designed and manufactured for use with outside plant telecommunications systems. Where

two or more items of the same class of equipment are required, these items shall be products of a single manufacturer; however, the component parts of the item need not be the products of the same manufacturer unless stated in this section.

1.6.4.1 Alternative Qualifications

Products having less than a 2-year field service record will be acceptable if a certified record of satisfactory field operation for not less than 6000 hours, exclusive of the manufacturers' factory or laboratory tests, is provided.

1.6.4.2 Material and Equipment Manufacturing Date

Products manufactured more than 3 years prior to date of delivery to site shall not be used, unless specified otherwise.

1.6.5 Regulatory Requirements

In each of the publications referred to herein, consider the advisory provisions to be mandatory, as though the word, "shall" had been substituted for "should" wherever it appears. Interpret references in these publications to the "authority having jurisdiction," or words of similar meaning, to mean the Contracting Officer. Equipment, materials, installation, and workmanship shall be in accordance with the mandatory and advisory provisions of NFPA 70 unless more stringent requirements are specified or indicated.

1.6.5.1 Independent Testing Organization Certificate

In lieu of the label or listing, submit a certificate from an independent testing organization, competent to perform testing, and approved by the Contracting Officer. The certificate shall state that the item has been tested in accordance with the specified organization's test methods and that the item complies with the specified organization's reference standard.

1.7 DELIVERY, STORAGE, AND HANDLING

Ship cable on reels in cut lengths as required to faciitate installation with a minimum overage of 10 percent. Radius of the reel drum shall not be smaller than the minimum bend radius of the cable. Wind cable on the reel so that unwinding can be done without kinking the cable. Two meters of cable at both ends of the cable shall be accessible for testing. Attach permanent label on each reel showing length, cable identification number, cable size, cable type, and date of manufacture. Provide water resistant label and the indelible writing on the labels. Apply end seals to each end of the cables to prevent moisture from entering the cable. Reels with cable shall be suitable for outside storage conditions when temperature ranges from minus 40 degrees C to plus 65 degrees C, with relative humidity from 0 to 100 percent. Equipment, other than cable, delivered and placed in storage shall be stored with protection from weather, humidity and temperature variation, dirt and dust, or other contaminants in accordance with manufacturer's requirements.

1.8 MAINTENANCE

1.8.1 Record Documentation

Provide the activity responsible for telecommunications system maintenance

and administration a single complete and accurate set of record documentation for the entire telecommunications system with respect to this project.

Provide T5 drawings including documentation on cables and termination hardware in accordance with EIA TIA/EIA-606-A. T5 drawings shall include schedules to show information for cut-overs and cable plant management, patch panel layouts, cross-connect information and connecting terminal layout as a minimum. Update existing record documentation to reflect campus distribution T0 drawings and T3 drawing schedule information modified, deleted or added as a result of this installation. Provide the following T5 drawing documentation as a minimum:

a. Cables - A record of installed cable shall be provided in accordance with EIA TIA/EIA-606-A. The cable records shall include only the required data fields][include the required data fields for each cable and complete end-to-end circuit report for each complete circuit from the assigned outlet to the entry facility in accordance with EIA TIA/EIA-606-A. Include manufacture date of cable with submittal.

b. Termination Hardware - Provide a record of installed patch panels, cross-connect points, campus distributor and terminating block arrangements and type in accordance with EIA TIA/EIA-606-A. Documentation shall include only the required data fields as a minimum in accordance with EIA TIA/EIA-606-A.

Provide record documentation as specified in Section 16710, BUILDING TELECOMMUNICATIONS CABLING SYSTEM.

1.8.2 Spare Parts

In addition to the requirements of Section 01781, OPERATION AND MAINTENANCE DATA, provide a complete list of parts and supplies, with current unit prices and source of supply, and a list of spare parts recommended for stocking. Spare parts shall be provided no later than the start of field testing.

1.9 WARRANTY

The equipment items shall be supported by service organizations which are reasonably convenient to the equipment installation in order to render satisfactory service to the equipment on a regular and emergency basis during the warranty period of the contract.

PART 2 PRODUCTS

2.1 MATERIALS AND EQUIPMENT

Products supplied shall be specifically designed and manufactured for use with outside plant telecommunications systems.

2.2 TELECOMMUNICATIONS ENTRANCE FACILITY

2.2.1 Protected Entrance Terminal (PET)

2.2.1.1 PET 25, 50 or 100 Pairs

These PETs shall consist of an input splice chamber with a 66 block punch

down clip for the outside plant cable, the protector field and the output from the protector field wired to a factory installed 110 type punch down block (PET Block). Another 110 punch down block will be installed next to the PET (station block) and all station cable pairs terminated to that 110 block. Jumpers will be installed to connect the PET and the station blocks. The gas tubes shall be 5 pin heavy duty with two or three element gas tubes. The PETs and the gas tubes shall be listed in RUS/REA Bull IP 344-2.

2.2.1.2 PET 6 Pair

The 6 pair PET shall consist of a thermoplastic base with three (3) 2-pair protector blocks. Connection shall be via stud mounted nuts. The gas tubes shall be heavy duty, 2 element well type. The PET and the gas tubes shall be as listed in RUS/REA Bull IP 344-2. A category 6, 100 type punch down block shall be installed next to the PET. All subscriber cable pairs shall be connected to the punch down block. Jumpers shall be installed from the PET to the punch down block to provide connectivity to the station outlets.

2.2.1.3 Main Distribution Frame (MFD) Copper, Communications Building

The MDF shall be a two sided, painted steel, main distribution frame of welded assembly with bold on frame components. The guard rails shall be adjustable from 775 mm to 927 mm but configured for 858 mm. The frame shall be a 12 vertical frame installed above 114 mm sleeved holes in the floor (12 holes for copper cable). The holes shall go to a cable vault below the room as shown in the drawings. The main frame shall be equipped with mounting brackets for RUS listed 100 pair MDF protector blocks with gas tube protectors. The main frame shall meet the requirement in RUS Bul 1753E-001. The protector blocks shall be annotated in Section 01015 TECHNICAL REQUIREMENTS.

2.2.2 Fiber Optic Terminations, Buildings

The fiber optic terminations shall consist of the outside plant cable being fusion spliced to single mode pigtails with factory installed SC connectors. The fusion splice shall have a splice loss of .02 dB or better as measured by the splicing machine and .2 dB as measured by an OTDR. The pigtails shall have single mode insertion loss of less than .35 dB with the typical being 15 dB and a single mode return loss better than -55 dB. The fusion splices shall be protected by a stainless steel sleeve and heat shrink tube and placed in a splice tray. The terminations shall be contained in a rack mounted combination unit (patching and splice containment). The enclosure shall be equipped with hardware to properly store 1 meter of fiber slack. The enclosure shall be designed to handle adapter panels with three duplex SC connectors per adapter panel. The SC connectors shall hae zirconia ceramic sleeves. The enclosure shall be capable of mounting four (4) adapter panelss. Blank adapter plates shall be used where ever there are no fiber optic adapter panels. One duplex single mode fiber optic patch cord shall be provided for each duplex fiber optic port. The fiber patch cords shall have a mated pair insertion loss of less than .35 dB with a typical loss of .15 dB and a typical mated return loss of less than -55 dB.

2.2.3 Fiber Optic Terminations, MDF, Communications Building

There shall be three (3) holes with sleeves down to the vault on the end of the copper MDF for fiber optic cable. Three (3) 19-inch relay racks shall

be installed by these holes for mounting of the fiber optic hardware necessary for termination and patching of the fiber optic cables. The fiber optic MDF termination hardware for the Communications Building shall be annoted in Section 01015 TECHNICAL REQUIREMENTS.

2.3 CLOSURES

2.3.1 Copper Conductor Closures

2.3.1.1 Underground Cable Closures

In vault or manhole: Provide underground closure suitable to house a straight, butt, and branch splice in a protective housing into which can be poured an encapsulating compound. Closure shall be of suitable thermoplastic, thermoset, or stainless steel material supplying structural strength necessary to pass the mechanical and electrical requirements in a vault or manhole environment. Encapsulating compound shall be reenterable and shall not alter the chemical stability of the closure. The encapsulant must completely fill the splice interstices. The closure shall be flash tested with nitrogen before encapsulation. The closure shall be listed in RUS/REA Bull IP 344-2. Vault closures shall meet the requirements of RUS Form 522.

2.3.2 Fiber Optic Closures

2.3.2.1 In Vault or Manhole

Provide underground closure suitable to house splice organizer in a protective housing into which can be poured an encapsulating compound. Closure shall be of thermoplastic, thermoset, or stainless steel material supplying structural strength necessary to pass the mechanical and electrical requirements in a vault or manhole environment. Encapsulating compound shall be reenterable and shall not alter the chemical stability of the closure. The closure shall be flash tested with nitrogen before encapsulation. The closure shall be listed in RUS/REA Bull IP 344-2.

2.4 CABLE SPLICES, AND CONNECTORS

2.4.1 Copper Cable Splices

Providemodular splices of a moisture resistant, insulation displacement connectors held rigidly in place to assure maximum continuity in accordance with RUS Bul 1753F-401. Cables 25 pairs or greater shall be spliced using multipair splicing connectors, which accommodate 25 pairs of conductors at a time. Provide correct connector size to accommodate the cable gauge of the supplied cable. Descrete modules shall be used on splices less than 25 pairs.

2.4.2 Copper Cable Splice Connector

Provide splice connectors with a polycarbonate body and cap and a tin-plated brass contact element. Connector shall accommodate 22 to 26 AWG solid wire with a maximum insulation diameter of 1.65 mm (0.065 inch). Fill connector with sealant grease to make a moisture resistant connection, in accordance with RUS Bul 1753F-401. Connectors shall be listed in RUS/REA Bull IP 344-2.

2.4.3 Fiber Optic Cable Splices

Provide fiber optic cable splices and splicing materials for fusion mechanical methods. The splice insertion loss shall be 0.2 dB maximum when measured in accordance with EIA TIA/EIA-455-59A using an Optical Time Domain Reflectometer (OTDR) and .02 dB as splices shall be designed for a return loss of 40.0 db max for single mode fiber when tested in accordance with EIA TIA/EIA-455-107A. Physically protect each fiber optic splice by a splice kit (stainless steel rod and heat shrink tube) specially designed for the splice measured by the splicing machine.

2.4.4 Fiber Optic Splice Organizer

Provide splice organizer suitable for housing fiber optic splices in a neat and orderly fashion. Splice organizer shall allow for a minimum of 1 m of fiber for each fiber within the cable to be neatly stored without kinks or twists. Splice organizer shall accommodate individual strain relief for each splice and allow for future maintenance or modification, without damage to the cable or splices. Provide splice organizer hardware, such as splice trays, protective sleeves, and shield bond connectors in a splice organizer kit.

2.4.5 Shield Connectors

Provide connectors with a stable, low-impedance electrical connection between the cable shield and the bonding conductor in accordance with RUS Bul 345-65.

2.5 CONDUIT

Provide conduit as specified in Section 01015 TECHNICAL REQUIREMENTS.

2.6 PLASTIC INSULATING TAPE

UL 510.

2.7 WIRE AND CABLE

2.7.1 Copper Conductor Cable

Solid copper conductors, covered with an extruded solid insulating compound. Insulated conductors shall be twisted into pairs which are then stranded or oscillated to form a cylindrical core. For special high frequency applications, the cable core shall be separated into compartments. Cable shall be completed by the application of a suitable core wrapping material, a corrugated copper or plastic coated aluminum shield, and an overall extruded jacket. Telecommunications contractor shall verify distances between splice points prior to ordering cable in specific cut lengths. Gauge of conductor shall be 24 gauge. Copper conductor shall conform to the following:

2.7.1.1 Underground

Provide filled cable meeting the requirements of ICEA S-99-689, RUS Bul 1753F-208.

2.7.2 Fiber Optic Cable

Provide single-mode, 8/125-um, 0.10 aperture dual window fiber optic cable.

Fiber optic cable shall be specifically designed for outside use with loose buffer construction. Provide fiber optic color code in accordance with RUS/REA Bull 1753F-601. The fiber cable shall have 9 maximum loss of .4 dB Km @ 1310 mm and .3 db Km @ 1550 mm. There shall be no internal fiber splices in the fiber.

2.7.2.1 Strength Members

Provide central, non-metallic strength members with sufficient tensile strength for installation and residual rated loads to meet the applicable performance requirements in accordance with ICEA S-87-640. The strength member is included to serve as a cable core foundation to reduce strain on the fibers, and shall not serve as a pulling strength member.

2.7.2.2 Shielding or Other Metallic Covering

The fiber optic cable shall have a 6 mil copolymer coated steel shield.

2.7.2.3 Performance Requirements

Provide fiber optic cable with optical and mechanical performance requirements in accordance with ICEA S-87-640.

2.7.3 Grounding and Bonding Conductors

Provide grounding and bonding conductors in accordance with RUS 1755.200, TIA J-STD-607-A, IEEE C2, and NFPA 70. Solid bare copper wire meeting the requirements of ASTM B 1 for sizes No. 8 AWG and smaller and stranded bare copper wire meeting the requirements of ASTM B 8, for sizes No. 6 AWG and larger. Insulated conductors shall have 600-volt, Type TW insulation meeting the requirements of UL 83.

2.8 CABLE TAGS IN MANHOLES, HANDHOLES, AND VAULTS

Provide tags for each telecommunications cable or wire located in manholes, handholes, and vaults. Cable tags shall be stainless steel and labeled as indicated in accordance with EIA TIA/EIA-606-A. Handwritten labeling is unacceptable.

2.8.1 Stainless Steel

Provide stainless steel, cable tags 41.25 mm (1 5/8 inches) in diameter 1.58 mm (1/16 inch) thick minimum, and circular in shape. Tags shall be die stamped with numbers, letters, and symbols not less than 6.35 mm (0.25 inch) high and approximately 0.38 mm (0.015 inch) deep in normal block style.

2.8.2 Polyethylene Cable Tags

Provide tags of polyethylene that have an average tensile strength of 22.4 MPa (3250 pounds per square inch); and that are two millimeter (0.08 inch) thick (minimum), non-corrosive non-conductive; resistive to acids, alkalis, organic solvents, and salt water; and distortion resistant to 77 degrees C (170 degrees F). Provide 1.3 mm (0.05 inch) (minimum) thick black polyethylene tag holder. Provide a one-piece nylon, self-locking tie at each end of the cable tag. Ties shall have a minimum loop tensile strength of 778.75 N (175 pounds). The cable tags shall have black block letters, numbers, and symbols 25 mm (one inch) high on a yellow background. Letters, numbers, and symbols shall not fall off or change positions

regardless of the cable tags' orientation.

2.9 BURIED WARNING AND IDENTIFICATION TAPE

Provide fiber optic media marking and protection in accordance with EIA TIA/EIA-590-A. Provide color, type and depth of tape as specified in paragraph BURIED WARNING AND IDENTIFICATION TAPE in Section 02300, EARTHWORK.

2.10 GROUNDING BRAID

Provide grounding braid that provides low electrical impedance connections for dependable shield bonding in accordance with RUS Bul 345-65 and RUS Bul 1753F-401. Braid shall be made from flat tin-plated copper.

2.11 MANUFACTURER'S NAMEPLATE

Each item of equipment shall have a nameplate bearing the manufacturer's name, address, model number, and serial number securely affixed in a conspicuous place; the nameplate of the distributing agent will not be acceptable.

2.12 FIELD FABRICATED NAMEPLATES

Provide laminated plastic nameplates in accordance with ASTM D 709 for each patch panel, protector assembly, rack, cabinet and other equipment or as indicated on the drawings. Each nameplate inscription shall identify the function and, when applicable, the position. Nameplates shall be melamine plastic, 3 mm (0.125 inch) thick, white with black center core. Surface shall be matte finish. Corners shall be square. Accurately align lettering and engrave into the core. Minimum size of nameplates shall be 25 by 65 mm (one by 2.5 inches). Lettering shall be a minimum of 6.35 mm (0.25 inch) high normal block style.

2.13 TESTS, INSPECTIONS, AND VERIFICATIONS

2.13.1 Factory Reel Test Data

Test 100 percent OTDR test of FO media at the factory in accordance with EIA TIA/EIA-526-7 for single mode fiber. Calibrate OTDR to show anomalies of 0.2 dB minimum. Submit test reports, including manufacture date for each cable reel and receive approval before delivery of cable to the project site.

PART 3 EXECUTION

3.1 INSTALLATION

Install all system components and appurtenances in accordance with manufacturer's instructions IEEE C2, NFPA 70, and as indicated. Provide all necessary interconnections, services, and adjustments required for a complete and operable telecommunications system.

3.1.1 Contractor Damage

Promptly repair indicated utility lines or systems damaged during site preparation and construction. Damages to lines or systems not indicated, which are caused by Contractor operations, shall be treated as "Changes" under the terms of the Contract Clauses. When Contractor is advised in

writing of the location of a nonindicated line or system, such notice shall provide that portion of the line or system with "indicated" status in determining liability for damages. In every event, immediately notify the Contracting Officer of damage.

3.1.2 Cable Inspection and Repair

Handle cable and wire provided in the construction of this project with care. Inspect cable reels for cuts, nicks or other damage. Damaged cable shall be replaced or repaired to the satisfaction of the Contracting Officer. Reel wraps shall remain intact on the reel until the cable is ready for placement.

3.1.3 Underground Duct

Provide underground duct and connections in accordance with Section 01015 TECHNICAL REQUIREMENTS.

3.1.4 Penetrations

Caulk and seal cable access penetrations in walls, ceilings and other parts of the building. Seal openings around electrical penetrations through fire resistance-rated wall, partitions, floors, or ceilings in accordance with Section 07840, FIRESTOPPING.

3.1.5 Cable Pulling

Test duct lines with a mandrel and swab out to remove foreign material before the pulling of cables. Avoid damage to cables in setting up pulling apparatus or in placing tools or hardware. Do not step on cables when entering or leaving the manhole. Do not place cables in ducts other than those shown without prior written approval of the Contracting Officer. Roll cable reels in the direction indicated by the arrows painted on the reel flanges. Set up cable reels on the same side of the manhole as the conduit section in which the cable is to be placed. Level the reel and bring into proper alignment with the conduit section so that the cable pays off from the top of the reel in a long smooth bend into the duct without twisting. Under no circumstances shall the cable be paid off from the bottom of a reel. Check the equipment set up prior to beginning the cable pulling to avoid an interruption once pulling has started. Use a cable feeder guide of suitable dimensions between cable reel and face of duct to protect cable and guide cable into the duct as it is paid off the reel. As cable is paid off the reel, lubricate and inspect cable for sheath defects. When defects are noticed, stop pulling operations and notify the Contracting Officer to determine required corrective action. Cable pulling shall also be stopped when reel binds or does not pay off freely. Rectify cause of binding before resuming pulling operations. Provide cable lubricants recommended by the cable manufacturer. Avoid bends in cables of small radii and twists that might cause damage. Do not bend cable and wire in a radius less than 10 times the outside diameter of the cable or wire.

3.1.5.1 Cable Tensions

Obtain from the cable manufacturer and provide to the Contracting Officer, the maximum allowable pulling tension. This tension shall not be exceeded.

3.1.5.2 Pulling Eyes

Equip cables 32 mm (1.25 inches) in diameter and larger with cable

manufacturer's factory installed pulling-in eyes. Provide cables with diameter smaller than 32 mm (1.25 inches) with heat shrinkable type end caps or seals on cable ends when using cable pulling grips. Rings to prevent grip from slipping shall not be beaten into the cable sheath. Use a swivel of 19 mm (3/4 inch) links between pulling-in eyes or grips and pulling strand.

3.1.5.3 Installation of Cables in Manholes, Handholes, and Vaults

Do not install cables utilizing the shortest route, but route along those walls providing the longest route and the maximum spare cable lengths. Form cables to closely parallel walls, not to interfere with duct entrances, and support cables on brackets. In existing manholes, handholes, and vaults where new ducts are to be terminated, or where new cables are to be installed, modify the existing installation of cables, cable supports, and grounding as required with cables arranged and supported as specified for new cables. Identify each cable with corrosion-resistant embossed metal tags.

3.1.6 Cable Splicing

3.1.6.1 Copper Conductor Splices

Perform splicing in accordance with requirements of RUS Bul 1753F-401.

3.1.6.2 Fiber Optic Splices

Fiber optic splicing shall be in accordance with manufacturer's recommendation and shall exhibit an insertion loss not greater than 0.2 dB for fusion splices as measured by the OTDR and .02 dB as measured by the splicing machine.

3.1.7 Surge Protection

All cables and conductors, except fiber optic cable, which serve as communication lines through off-premise lines, shall have surge protection installed at each end which meet the requirements of RUS Bul 1751F-815.

3.1.8 Grounding

Provide grounding and bonding in accordance with RUS 1753F.401, TIA J-STD-607-A, IEEE C2, and NFPA 70. Ground exposed noncurrent carrying metallic parts of telephone equipment, cable sheaths, cable splices, and terminals.

3.1.8.1 Telecommunications Master Ground Bar (TMGB)

The TMGB is the hub of the basic telecommunications grounding system providing a common point of connection for ground from outside cable, CD, and equipment. Establish a TMGB for connection point for cable stub shields to connector blocks and CD protector assemblies as specified in Section 16402 INTERIOR DISTRIBUTION SYSTEMS.

3.1.8.2 Incoming Cable Shields

Shields shall not be bonded across the splice to the cable stubs. Ground shields of incoming cables in the EF Telecommunications to the TMGB.

3.1.8.3 Campus Distributor Grounding

a. PET Protection assemblies: Mount directly on the telecommunications backboard. Connect connector assemblies mounted on each vertical frame with No. 6 AWG copper conductor to provide a low resistance path to TMGB.

b. TMGB connection: Connect TMGB to TGB with copper conductor with a total resistance of less than 0.01 ohms.

3.1.9 Cut-Over

All necessary transfers and cut-overs, shall be accomplished by the telecommunications contractor.

3.2 LABELING

3.2.1 Labels

Provide labeling for new cabling and termination hardware located within the facility in accordance with EIA TIA/EIA-606-A. Handwritten labeling is unacceptable. Stenciled lettering for cable and termination hardware shall be provided using a thermal ink transfer process or laser printer.

3.2.2 Cable Tag Installation

Install cable tags for each telecommunications cable or wire located in manholes, handholes, and vaults including each splice. The labeling of telecommunications cable tag identifiers shall be in accordance with EIA TIA/EIA-606-A. Do not provide handwritten letters. Install cable tags so that they are clearly visible without disturbing any cabling or wiring in the manholes, handholes, and vaults.

3.2.3 Termination Hardware

Label patch panels, distribution panels, connector blocks and protection modules using color coded labels with identifiers in accordance with EIA TIA/EIA-606-A.

3.3 FIELD APPLIED PAINTING

Provide ferrous metallic enclosure finishes in accordance with the following procedures. Ensure that surfaces are dry and clean when the coating is applied. Coat joints and crevices. Prior to assembly, paint surfaces which will be concealed or inaccessible after assembly. Apply primer and finish coat in accordance with the manufacturer's recommendations. Provide ferrous metallic enclosure finishes as specified in Section 09900, PAINTS AND COATINGS.

3.3.1 Cleaning

Clean surfaces in accordance with SSPC SP 6.

3.3.2 Priming

Prime with a two component polyamide epoxy primer which has a bisphenol-A base, a minimum of 60 percent solids by volume, and an ability to build up a minimum dry film thickness on a vertical surface of 0.127 mm (5.0 mils). Apply in two coats to a total dry film thickness of 0.127 to 0.2 mm (5 to 8

mils).

3.3.3 Finish Coat

Finish with a two component urethane consisting of saturated polyester polyol resin mixed with aliphatic isocyanate which has a minimum of 50 percent solids by volume. Apply to a minimum dry film thickness of 0.05 to 0.076 mm (2 to 3 mils). Color shall be the manufacturer's standard.

3.4 FIELD FABRICATED NAMEPLATE MOUNTING

Provide number, location, and letter designation of nameplates as indicated. Fasten nameplates to the device with a minimum of two sheet-metal screws or two rivets.

3.5 FIELD QUALITY CONTROL

Provide the Contracting Officer 30 working days notice prior to each test. Provide labor, equipment, and incidentals required for testing. Correct defective material and workmanship disclosed as the results of the tests. Furnish a signed copy of the test results to the Contracting Officer within 3 working days after the tests for each segment of construction are completed. Perform testing as construction progresses and do not wait until all construction is complete before starting field tests.

3.5.1 Pre-Installation Tests

Perform the following tests on cable at the job site before it is removed from the cable reel. For cables with factory installed pulling eyes, these tests shall be performed at the factory and certified test results shall accompany the cable.

3.5.1.1 Cable Capacitance

Perform capacitance tests on at least 100 percent of the pairs within a cable to determine if cable capacitance is within the limits specified.

3.5.1.2 Loop Resistance

Perform DC-loop resistance on at least 100 percent of the pairs within a cable to determine if DC-loop resistance is within the manufacturer's calculated resistance.

3.5.1.3 Pre-Installation Test Results

Provide results of pre-installation tests to the Contracting Officer at least30 working days before installation is to start. Results shall indicate reel number of the cable, manufacturer, size of cable, pairs tested, and recorded readings. When pre-installation tests indicate that cable does not meet specifications, remove cable from the job site.

3.5.2 Acceptance Tests

Perform acceptance testing in accordance with RUS Bul 1753F-201 and as further specified in this section. Provide personnel, equipment, instrumentation, and supplies necessary to perform required testing. Notification of any planned testing shall be given to the Contracting Officer at least 30 days prior to any test unless specified otherwise. Testing shall not proceed until after the Contractor has received written

Contracting Officer's approval of the test plans as specified. Test plans shall define the tests required to ensure that the system meets technical, operational, and performance specifications. The test plans shall define milestones for the tests, equipment, personnel, facilities, and supplies required. The test plans shall identify the capabilities and functions to be tested. Provide test reports in booklet form showing all field tests performed, upon completion and testing of the installed system. Measurements shall be tabulated on a pair by pair or strand by strand basis.

3.5.2.1 Copper Conductor Cable

Perform the following acceptance tests in accordance with RUS Bul 1753F-201:

a. Ground Resistance

b. Shield Continuity. A shield continuity test set must be used.

c. DC Insulation Resistance

d. DC Loop Resistance and DC Resistance Unbalance Measurement

e. Sybscribe Loop Measurement

f. Shorts, grounds, crosses and opens

3.5.2.2 Fiber Optic Cable

Test fiber optic cable in accordance with RUS Bul 1753F-201 and as further specified in this section. Two optical tests shall be performed on all optical fibers: Optical Time Domain Reflectometry (OTDR) Test, and Attenuation Test. In addition, a Bandwidth Test shall be performed on all multimode optical fibers. These tests shall be performed on the completed end-to-end spans which include the near-end pre-connectorized single fiber cable assembly, outside plant as specified, and the far-end pre-connectorized single fiber cable assembly.

a. OTDR Test: The OTDR test shall be used to determine the adequacy of the cable installations by showing any irregularities, such as discontinuities, micro-bendings or improper splices for the cable span under test. Hard copy fiber signature records shall be obtained from the OTDR for each fiber in each span and shall be included in the test results. The OTDR test shall be measured in both directions. A reference length of fiber,31 m minimum, used as the delay line shall be placed before the new end connector and after the far end patch panel connectors for inspection of connector signature. Conduct OTDR test and provide calculation or interpretation of results in accordance with EIA TIA/EIA-526-7 for single-mode fiber. Splice losses shall not exceed .2 dB as measured by the OTDR and .02 dB as measured by the splicing machine.

b. Attenuation Test: End-to-end attenuation measurements shall be made on all fibers, in both directions, using a 1310 nanometer light source at one end and the optical power meter on the other end to verify that the cable system attenuation requirements are met in accordance with EIA TIA/EIA-526-7 for single-mode fiber optic cables. The measurement method shall be in accordance with EIA TIA/EIA-455-61A. Attenuation losses shall not exceed .4 dB

per Km @ 1310 nm and .3 dB/Km @ 1550 nm.

-- End of Section --

SECTION 16713

FIBER OPTIC (FO) OUTSIDE PLANT (OSP) MEDIA

PART 1 GENERAL

1.1 REFERENCES

The publications listed below form a part of this specification to the extent referenced. The publications are referred to within the text by the basic designation only.

ELECTRONIC INDUSTRIES ALLIANCE (EIA)

EIA TIA/EIA-472D000-A	(1993) Fiber Optic Communications Cable for Outside Plant Use
EIA TIA/EIA-4750000-C	(1996) Generic Specifications for Fiber Optic Connectors (ANSI)
EIA TIA/EIA-526-14A	(1998) OFSTP-14A Optical Power Loss Measurements of Installed Multimode Fiber Cable Plant (ANSI/TIA/EIA-526-14A)
EIA TIA/EIA-568-B.1	(2001; Addendum 2001) Commercial Building Telecommunications Cabling Standard - Part 1: General Requirements (ANSI/TIA/EIA-568-B.1)
EIA TIA/EIA-568-B.3	(2000; Addendum 2002) Optical Fiber Cabling Components Standard (ANSI/TIA/EIA-568-B.3)
EIA TIA/EIA-569-A	(1998; Addenda 2000, 2001) Commercial Building Standards for Telecommunications Pathways and Spaces (ANSI/TIA/EIA-569-A)
EIA TIA/EIA-590-A	(1997) Standard for Physical Location and Protection of Below Ground Fiber Optic Cable Plant
EIA TIA/EIA-598-B	(2001) Optical Fiber Cable Color Coding

INSTITUTE OF ELECTRICAL AND ELECTRONICS ENGINEERS (IEEE)

IEEE C2	(2002) National Electrical Safety Code

INSULATED CABLE ENGINEERS ASSOCIATION (ICEA)

ICEA S-87-640	(1999) Fiber Optic Outside Plant Communications Cable

NATIONAL ELECTRICAL MANUFACTURERS ASSOCIATION (NEMA)

NEMA RN 1	(1998) Polyvinyl Chloride (PVC) Externally Coated Galvanized Rigid Steel Conduit and Intermediate Metal Conduit

NEMA TC 2	(2003) Electrical Polyvinyl Chloride (PVC) Tubing and Conduit
NEMA TC 3	(2004) Polyvinyl Chloride PVC Fittings for Use with Rigid PVC Conduit and Tubing
NEMA TC 6 & 8	(2003) Polyvinyl Chloride PVC Plastic Utilities Duct for Underground Installations
NEMA TC 9	(2004) Fittings for Polyvinyl Chloride (PVC) Plastic Utilities Duct for Underground Installation

NATIONAL FIRE PROTECTION ASSOCIATION (NFPA)

NFPA 70	(2005) National Electrical Code

1.2 RELATED REQUIREMENTS

Section 16050 BASIC ELECTRICAL MATERIALS AND METHODS applies to this section with additions and modifications specified herein.

1.3 SUBMITTALS

The following shall be submitted in accordance with Section 01335 SUBMITTAL PROCEDURES for design built project:

SD-03 Product Data

Fiber Optic Media Types

Fiber Optic Splices Material Data

Fiber Optic Terminations and Connectors Material Data

SD-06 Test Reports

Fiber Optic Factory Test Plan

Fiber Optic Field Tests Plan

1.4 DELIVERY, STORAGE, AND HANDLING

Ship media to job site on factory reels or in factory cartons. Radius of the reel drum shall not be smaller than the minimum bend radius recommended by the manufacturer for the media. Wind cable on the reel so that unwinding can be done without kinking the cable. Two meters of cable at each end of the reel must be readily accessible for testing. Provide a permanent label on each reel showing length, media, identification number, and date of manufacture. Provide water resistant label and ink on the labels. Apply end seals to each end of the media after testing and before terminating to prevent moisture from entering the cable while stored at the job site. Reels with cable shall be suitable for outside storage conditions when temperature ranges from minus 40 degrees C to plus 65 degrees C, with relative humidity from zero to 100 percent. Equipment, other than FO media, delivered and placed in storage shall be stored with protection from weather, humidity and temperature variation, dirt and dust,

or other contaminants.

PART 2 PRODUCTS

2.1 MATERIALS AND EQUIPMENT

Materials and FO system material shall be the standard products of a manufacturer regularly engaged in the manufacturer of such products and shall be the manufacturer's standard commercially available product.

2.1.1 Fiber Optic Media Types

FO media shall meet all performance requirements of EIA TIA/EIA-568-B.1, EIA TIA/EIA-568-B.3 and the physical requirements of ICEA S-87-640 and EIA TIA/EIA-598-B.

Provide multimode Fiber optic cables 6 strands 62.5/125 microns terminated with "ST" connectors at each end as shown on drawings.

2.1.1.1 Multi Mode Fiber Media

Provide FO media with outer sheath jacket, ripcords, water blocking material, core tube, and core fibers as installed in a permanent underground pathway system as shown on the drawings. FO media shall have an all glass, graded index material with a nominal core diameter of 62.5 microns. Provide a cladding material for the fiber which is compatible with the core. Media transmission window shall be centered at 850 and 1300 nanometer wavelengths, attenuation at 1300 nanometers shall be less than 2.0 dB per kilometer. Minimum bandwidth shall be 500 mHz-Km.

2.2 FIBER OPTIC TERMINATIONS AND CONNECTORS

FO connectors shall comply with EIA TIA/EIA-4750000-C and EIA TIA/EIA-604-2 Type "ST" on both ends of cable.

2.3 FIBER OPTIC PATHWAY SYSTEM

Provide an FO pathway system including raceway conduit, duct system, and maintenance manholes and handholes as shown on the drawings. Pathway materials shall comply with EIA TIA/EIA-569-A, and the following commercial standards for construction materials, NEMA RN 1 (PVC), NEMA TC 2 (PVC), NEMA TC 3 (PVC), NEMA TC 6 & 8, and NEMA TC 9.

2.3.1 Conduit

Conduit as specified in Section 16375 ELECTRICAL DISTRIBUTION SYSTEM, UNDERGROUND.

2.4 FACTORY FO QUALITY CONTROL

Conduct factory quality tests of FO media as required by EIA TIA/EIA-472D000-A.

2.5 PREPARATION FOR DELIVERY

Ship media on reels according to required lengths shown on drawings. Provide 2 meters pigtails on each end of media accessible for testing. Reel drum shall comply with manufacturers recommended bend radius for the media. Wind media on reel so that unreeling can be done without kinking

the media. Attach a permanent waterproof label with indelible text on reel showing the length, media type, bandwidth, attenuation, and date of manufacture.

2.6 FACTORY REEL TEST

Test 100 percent OTDR test of FO media at the factory prior to shipment in accordance with EIA TIA/EIA-568-B.1 and EIA TIA/EIA-568-B.3. Use EIA TIA/EIA-526-14A Method B for multi mode fiber measurements. Calibrate OTDR to show anomalies of 0.2 dB minimum. Provide digitized or photographic traces to the Contracting Officer.

2.7 MISCELLANEOUS ITEMS

2.7.1 FO Media Tags

Provide stainless steel, 41.25 mm in diameter 1.58 mm thick, and circular in shape.

2.7.2 Buried Warning and Identification Tape

Provide color, type and depth of tape as specified in paragraph "Buried Warning and Identification Tape" in Section 02316 EXCAVATION, TRENCHING, AND BACKFILLING FOR UTILITIES SYSTEMS, FO media must be marked and protected as required by EIA TIA/EIA-590-A.

PART 3 EXECUTION

3.1 INSTALLATION

Install and test the FO media in accordance with contract drawings, specifications, IEEE C2, NFPA 70, and EIA TIA/EIA-590-A. Provide all necessary power, utility services, technicians, test equipment, calibration equipment as required to perform reel and final acceptance tests of the media. All media which fail the factory or reel tests or final acceptance field tests shall be replaced and re-tested at the contractors expense. Splices are not permitted unless shown on the construction drawings. Field test splices within 24 hours after splice installation. Splices shall be tested to demonstrate a maximum 0.2 dB loss. Provide a splice box for each field splice. Provide a minimum of 2 meters for routing and testing media. Protect media ends of unspliced FO media during splicing operations.

3.1.1 Contractor Damage

Promptly repair indicated utility and communications lines or systems damaged during site preparation and construction. Damage to lines or systems not indicated, which are caused by contractor operations, shall be treated as "Changes" under the terms of the Contract clauses. When Contractor is advised in writing of the location of a non-indicated line or system, such notice shall provide that portion of the line or system with "indicated" status in determining liability for damages. In every event, immediately notify the Contracting Officer of damage.

3.1.2 Direct Burial System

Installation shall be in accordance with EIA TIA/EIA-590-A. Under railroad tracks, paved areas, and roadways install cable in conduit encased in concrete. Slope ducts to drain. Excavate trenches by hand or mechanical trenching equipment. Provide a minimum cable cover of 610 mm below

finished grade. Trenches shall be not less than 155 mm wide and in straight lines between cable markers. Do not use cable plows. Bends in trenches shall have a radius of not less than 915 mm. Where two or more cables are laid parallel in the same trench, space laterally at least 75 mm apart. When rock is encountered, remove it to a depth of at least 75 mm below the cable and fill the space with sand or clean earth free from particles larger than 6 mm. Do not unreel and pull cables into the trench from one end. Cable may be unreeled on grade and lifted into position. Provide color, type and depth of warning tape as specified in Section 02316 EXCAVATION, TRENCHING, AND BACKFILLING FOR UTILITIES SYSTEMS.

3.1.2.1 Media Placement

a. Separate FO media crossing other cables or metal piping from the other cables or pipe by not less than 75 mm of well tamped earth. Do not install FO media under or above traffic signal loops.

b. Media shall be in one continuous length without splices except where splices are shown on the drawings.

c. Do not allow bends in media which exceed the manufacturers minimum recommended radii. Do not bend media to a radius less than 10 times the outside diameter of the media.

d. Leave a horizontal slack of approximately 915 mm in the ground on each end of cable runs, on each side of connection boxes, and at points where connections are brought above ground. Where cable is brought above ground, leave additional slack to make necessary connections.

3.1.3 Underground Duct

Construct underground duct as specified in Section 16375 ELECTRICAL DISTRIBUTION SYSTEM, UNDERGROUND. Encase in concrete any ducts under roads, paved areas, or railroad tracks.

3.1.4 Reconditioning of Surfaces

3.1.4.1 Unpaved Surface Treatment

Restore unpaved surfaces disturbed during the installation of duct or direct burial cable to their original elevation and condition. Carefully preserve existing sod and topsoil and replace after the back-filling is completed. Replace damaged sod with sod of quality equal to that removed. Where the surface is disturbed in a newly seeded area, re-seed the restored surface with the same quantity and formula of seed as that used in the original seeding.

3.1.4.2 Paving Repairs

Where trenches, pits, or other excavations are made in existing roadways and in other areas of pavement where surface treatment of any kind exists, restore such surface treatment or pavement to the same thickness and to the same kind as previously existed. Surface treatment or pavement shall also match and tie into the adjacent and surrounding existing surfaces.

3.1.5 Cable Pulling

Test duct lines with a mandrel and swab out to remove foreign material

before the pulling of FO media. Avoid damage to cables in setting up pulling apparatus or in placing tools or hardware. Do not step on media when entering or leaving the maintenance holes. Do not place media in ducts other than those shown without prior written approval of the Contracting Officer. Roll cable reels in the direction indicated by the arrows painted on the reel flanges. Set up media reels on the same side of the maintenance hole as the pathway section in which the media is to be placed. Level the reel and bring into proper alignment with the pathway section so that the media pays off from the top of the reel in a long smooth bend into the duct without twisting. Under no circumstances shall the media be paid off from the bottom of the reel. Check the equipment set up prior to beginning the media cable pulling to avoid an interruption once pulling has started. Use a cable feeder guide of suitable dimensions between media reel and face of duct to protect media and guide cable into the duct as it is paid off the reel. As media is paid off the reel, lubricate and inspect media for sheath defects. When defects are noticed, stop pulling operations and notify the Contracting Officer to determine required corrective action. Stop media pulling if reel binds or does not pay off freely. Rectify cause of binding before resuming pulling operations. Provide media lubricants recommended by the cable manufacturer. Provide 1 meter of spare media in all manholes and enclosures for final termination and testing.

3.1.5.1 FO Media Tensions

Install FO media as shown on construction drawings. Provide devices to monitor media tension during installation. Do not exceed manufacturers recommended maximum FO tensions and bending radii during installation.

3.1.5.2 Installation of Media in Maintenance Manholes, Handholes, and Vaults

Do not install media utilizing the shortest route, but route along those walls providing the longest route and the maximum spare cable lengths. Form cables to closely parallel walls, not to interfere with duct entrances, and support media on brackets and cable insulators at a maximum of1220 mm. In existing maintenance manholes, handholes, and vaults where new ducts are to be terminated, or where new media are to be installed, modify the existing installation of media, cable supports, and grounding as required with cables arranged and supported as specified for new media.

3.1.6 Grounding

Ground exposed non current carrying metallic parts of telephone equipment, media sheaths, media splices, and terminals.

3.1.7 Housekeeping

The Contractor shall be responsible for cleaning up work area and maintaining the work area in orderly condition.

3.2 FIELD QUALITY CONTROL

Provide the Contracting Officer 10 working days notice prior to each reel and final acceptance test. Provide labor, equipment, and incidentals required for testing. Correct defective material and workmanship disclosed as the results of the tests. Furnish a signed copy of the test results to the Contracting Officer within 3 working days after the tests for each segment of construction are completed. Perform testing as construction progresses and do not wait until all construction is complete before

starting field tests.

3.2.1 Field Reel Tests

Perform the following tests on FO media at the job site before it is removed from the cable reel. For cables with factory installed pulling eyes, these tests shall be performed at the factory and certified test results shall accompany the media. Perform OTDR tests with media on reels and compare factory and field test data.

3.2.1.1 Reel Test Results

Provide results of reel tests to the Contracting Officer at least 5 working days before installation is to commence. Results shall indicate reel number of the media, manufacturer, type and number of fiber tested, and recorded readings. When reel tests indicate that the media does not comply with factory reel test results remove the media from the job site and replace with compliant media.

3.2.2 Final Acceptance Tests

Perform end-to-end tests including power meter light source and OTDR tests. Perform OTDR measurements as required by EIA TIA/EIA-568-B.1 and EIA TIA/EIA-568-B.3. Multi mode fiber shall be tested in accordance with EIA TIA/EIA-526-14A (Optical Power Loss).

3.2.2.1 Test Results

Provide results of final acceptance tests (attenuation tests, OTDR traces, etc.), to the Contracting Officer at least 5 working days after completion of tests.

-- End of Section --

ANA Regional Brigade

Paktika, Afghanistan

Volume 2 of 3

K Guard Tower
L Guard House
M Reception Building
N DFAC
O Power Plant

PE Brigade HQ Bldg.
PF Garrison HQ Bldg.
PG Arms Storage Bldg.
PI Pol Storage Bldg.
PJ Maintenance Garage 9 Bay
SK Maintenance Garage 3 Bay
PK Refueling Point

US Army Corps
of Engineers
Transatlantic Programs Center

26 June 2007

DRAWING INDEX

SHT.REF. NO.	FILE NO.	REVISIONS		TITLE	SHT.REF. NO.	FILE NO.	REVISIONS		TITLE
		REV. NO.	AM/COP NO.				REV. NO.	AM/COP NO.	
	AF0707--GI01GN			DRAWING INDEX OF INDICES					
				VOLUME 1					**VOLUME 3**
						AF0707--GI13GN			DRAWING INDEX SHEET 12
	AF0707--GI02GN			DRAWING INDEX SHEET 1					RD BATTALION HQ BUILDING
				A DPW BUILDING					V CENTRAL RECEIVING WAREHOUSE
				B DETENTION FACILITY					
	AF0707--GI03GN			DRAWING INDEX SHEET 2		AF0707--GI14GN			DRAWING INDEX SHEET 13
				CA BARRACKS					X TRAINING BUILDING
				CB MWR					ZA AMMO IGLOO
									ZB PERIMETER FENCE
	AF0707--GI04GN			DRAWING INDEX SHEET 3					BB COMMUNITY CENTER
				CC STORAGE BUILDING					DD MEDICAL CLINIC
				CE DEFAC 2					
				DA BARRACKS		AF0707--GI15GN			DRAWING INDEX SHEET 14
									CO STANDARD DETAILS
	AF0707--GI05GN			DRAWING INDEX SHEET 4					
				DA BARRACKS CONTINUED					
				DB MWR					
				DC DEFAC 3					
	AF0707--GI06GN			DRAWING INDEX SHEET 5					
				E FIRE STATION					
				F RANGE					
				FA OBSERVATION TOWER					
				FB AMMUNITION BREAKDOWN BUILDING					
				FC BLEACHER ENCLOSURE					
				VOLUME 2					
	AF0707--GI07GN			DRAWING INDEX SHEET 6					
				K GUARD TOWER					
				L GUARD HOUSE					
				M RECEPTION BUILDING					
				N DFAC					
				O POWER PLANT					
	AF0707--GI08GN			DRAWING INDEX SHEET 7 NOT USED					
	AF0707--GI09GN			DRAWING INDEX SHEET 8 NOT USED					
	AF0707--GI10GN			DRAWING INDEX SHEET 9					
				PE BRIGADE HQ BUILDING					
				PF GARRISON HQ BUILDING					
				PG ARMS STORAGE BUILDING					
				PI POL STORAGE BUILDING					
	AF0707--GI11GN			DRAWING INDEX SHEET 10					
				PJ MAINTENANCE GARAGE 9 BAY					
				SK MAINTENANCE GARAGE 3 BAY					
				PK REFUELER POINT					
	AF0707--GI12GN			DRAWING INDEX SHEET 11 NOT USED					

SYMBOL	DESCRIPTION	DATE	APR

RECOMMENDED BY
TECHNICAL DIRECTOR DATE:
APPROVED BY
DDEPM DATE:
CONSTRUCTIBILITY REVIEW
CHIEF, QUALITY ASSUR DIV DATE:
APPROVED FUNCTIONAL ADEQUACY
PROJECT MANAGER DATE:

US Army Corps of Engineers
Transatlantic Programs Center

ANA REGIONAL BRIGADE
PAKTIKA, AFGHANISTAN
DRAWING INDEX OF INDICES

AF0707--GI01GN

DRAWING INDEX

SHT.REF. NO.	FILE NO.	REVISIONS REV. NO.	REVISIONS AM/COP NO.	TITLE
	AF0707--GI07GN			DRAWING INDEX SHEET 6
				K GUARD TOWER
K A-1	AF0707K-AR01PN			FLOOR PLAN, SECTION ELEVATION AND ROOF PLAN
K A-2	AF0707K-AR02DT			PLAN AND SECTION DETAILS
K S-1	AF0707K-SB01PN			FOUNDATION AND SLAB PLAN ROOF FRAMING PLAN
K S-2	AF0707K-SB02DT			STAIR DETAILS
K S-3	AF0707K-SF03DT			SLAB-ON-GRADE DETAILS
K M-1	AF0707K-MH01PN			HVAC PLAN
K E-1	AF0707K-EL01PN			LIGHTING AND POWER PLANS
				L GUARD HOUSE
L GH-A-01	AF0707GH-A-01			FLOOR PLAN, EXTERIOR ELEV. & BLDG. SECTIONS
L GH-S-01	AF0707GH-S-01			FOUNDATION AND ROOF FRAMING PLANS
L GH-M-01	AF0707GH-M-01			HVAC PLAN
L GH-E-01	AF0707GH-E-01			ELECTRICAL SYSTEMS
				M RECEPTION BLDG.
M RC-A-01	AF0707RC-A-01			FLOOR, REFLECTED CEILING & ROOF PLAN
M RC-A-02	AF0707RC-A-02			EXTERIOR ELEVATIONS & BUILDING SECTIONS
M RC-S-01	AF0707RC-S-01			FOUNDATION/ROOF FRAMING PLANS, SECTIONS & DETAILS
M RC-S-02	AF0707RC-S-02			SECTIONS
M RC-M-01	AF0707RC-M-01			MECHANICAL FLOOR PLAN AND SCHEDULES
M RC-P-01	AF0707RC-P-01			PLUMBING FLOOR PLANS AND RISER DIAGRAMS
M RC-E-01	AF0707RC-E-01			PANEL SCHEDULE AND RISER DIAGRAMS
M RC-E-02	AF0707RC-E-02			LIGHTING, POWER, COMMUNICATION AND GROUNDING PLAN
				N DFAC
N DF-A-01	AF0707DF-A-01			FLOOR PLAN
N DF-A-02	AF0707DF-A-02			REFLECTED CEILING PLAN
N DF-A-03	AF0707DF-A-03			ROOF PLAN
N DF-A-04	AF0707DF-A-04			BUILDING ELEVATION
N DF-A-05	AF0707DF0A-05			BUILDING SECTIONS DINING MUD GRATE
N DF-A-06	AF0707DF-A-06			ENLARGED TOILET AND AWNING PLAN
N DF-A-07	AF0707DF-A-07			TEA BREWING STATION
N DF-S-01	AF0707DF-S-01			FOUNDATION PLAN
N DF-M-01	AF0707DF-M-01			FLOOR PLAN
N DF-M-02	AF0707DF-M-02			MECHANICAL ROOF PLAN
N DF-M-03	AF0707DF-M-03			SCHEDULES
N DF-M-04	AF0707DF-M-04			TEMPERATURE CONTROL DIAGRAM

SHT.REF. NO.	FILE NO.	REVISIONS REV. NO.	REVISIONS AM/COP NO.	TITLE
				N DFAC CONTINUED
N DF-P-01	AF0707DF-P-01			PLUMBING PIPING PLAN
N DF-P-02	AF0707DF-P-02			DRAINAGE PIPING ENLARGED FLOOR PLAN
N DF-P-03	AF0707DF-P-03			COLD, HOT WATER PIPING PLAN
N DF-P-04	AF0707DF-P-04			DRAINAGE RISER DIAGRAM
N DF-P-05	AF0707DF-P-05			COLD, HOT WATER RISER DIAGRAM
N DF-P-06	AF0707DF-P-06			ENLARGED TOILET PLUMBING PLAN
N DF-P-07	AF0707DF-P-07			COLD AND HOT WATER RISER DIAGRAM AND DRAINAGE RISER DIAGRAM
N DF-P-08	AF0707DF-P-08			LP GAS STOVE DETAILS
N DF-E-01	AF0707DF-E-01			PANEL SCHEDULES AND RISER DIAGRAMS
N DF-E-02	AF0707DF-E-02			PANEL SCHEDULES
N DF-E-03	AF0707DF-E-03			NOT USED
N DF-E-04	AF0707DF-E-04			GROUNDING PLAN
N DF-E-05	AF0707DF-E-05			LIGHTING PLAN
N DF-E-06	AF0707DF-E-06			POWER PLAN
N DF-E-07	AF0707DF-E-07			TEA BREWING STATION LIGHTING PLAN
				O POWER PLANT
O PP-A-01	AF0707PP-A-01			FLOOR PLAN
O PP-A-02	AF0707PP-A-02			REFLECTED CEILING PLAN
O PP-A-03	AF0707PP-A-03			ROOF PLAN
O PP-A-04	AF0707PP-A-04			EXTERIOR ELEVATIONS
O PP-A-05	AF0707PP-A-05			BUILDING SECTIONS
O PP-A-06	AF0707PP-A-06			BUILDING WALL SECTIONS
O PP-S-01	AF0707PP-S-01			FOUNDATION PLAN
O PP-S-02	AF0707PP-S-02			CONTAINMENT PAD PLAN & SPREAD FOOTING SECTIONS & DETAILS
O PP-M-01	AF0707PP-M-01			MECHANICAL FLOOR PLAN
O PP-M-02	AF0707PP-M-02			MECHANICAL MOTORIZED DAMPERS
O PP-M-03	AF0707PP-M-03			SECTION DAMPERS
O PP-M-04	AF0707PP-M-04			CONTROL DIAGRAM AND SCHEDULES
O PP-P-01	AF0707PP-P-01			FUEL OIL PIPING, BULK STORAGE TANKS LAYOUT & DETAILS
O PP-P-02	AF0707PP-P-02			25000 GALLON DIESEL STORAGE TANKS LAYOUT & DETAILS
O PP-P-03	AF0707PP-P-03			FUEL OIL PIPING PLAN & DETAILS
O PP-P-04	AF0707PP-P-04			DAY TANK PIPING LAYOUT & DETAILS
O PP-P-05	AF0707PP-P-05			COMPRESSED AIR PIPING PLAN AND DETAILS
O PP-P-06	AF0707PP-P-06			COLD WATER PIPING PLAN AND DETAILS
O PP-P-07	AF0707PP-P-07			WASTE OIL & WASTE WATER PIPING PLAN AND DETAILS
O PP-P-08	AF0707PP-P-08			COMPRESSED AIR AND WATER PIPING RISER DIAGRAM
O PP-P-09	AF0707PP-P-09			TOILET 107 & 108 PLUMBING PLAN & RISER DIAGRAM
O PP-P-10	AF0707PP-P-10			FUEL OIL SCHEMATIC
O PP-E-01	AF0707PP-E-01			ELECTRICAL EQUIPMENT PLAN
O PP-E-02	AF0707PP-E-02			ELECTRICAL LIGHTING PLAN
O PP-E-03	AF0707PP-E-03			ELECTRICAL POWER AND TELEPHONE PLAN
O PP-E-04	AF0707PP-E-04			ELECTRICAL MONITORING AND CONTROL PLAN
O PP-E-05	AF0707PP-E-05			ELECTRICAL GROUNDING PLAN
O PP-E-06	AF0707PP-E-06			LIGHTNING PROTECTION ROOF PLAN
O PP-E-07	AF0707PP-E-07			FUEL TANKS PLAN
O PP-E-08	AF0707PP-E-08			ONE LINE DIAGRAM AND TELEPHONE RISER DIAGRAM
O PP-E-09	AF0707PP-E-09			ONE LINE DIAGRAM
O PP-E-10	AF0707PP-E-10			ELECTRICAL 15KV SWITCHGEAR PP-SWBD1 ELEVATIONS
O PP-E-11	AF0707PP-E-11			GENERATOR CONTROL SWITCHBOARD
O PP-E-12	AF0707PP-E-12			ELECTRICAL TRANSFORMER DETAILS PP-SWBD1 ELEVATIONS
O PP-E-13	AF0707PP-E-13			ELECTRICAL PANEL SCHEDULES
O PP-E-14	AF0707PP-E-14			ELECTRICAL PANEL SCHEDULES
O PP-E-15	AF0707PP-E-15			ELECTRICAL PANEL SCHEDULES
O PP-E-16	AF0707PP-E-16			ELECTRICAL PANEL SCHEDULES AND RISER DIAGRAM

SYMBOL	DESCRIPTION	DATE	APR

US Army Corps of Engineers
Transatlantic Programs Center

ANA REGIONAL BRIGADE
PAKTIKA, AFGHANISTAN

DRAWING INDEX SHEET 6

DRAWING INDEX

SHT.REF. NO.	FILE NO.	REVISIONS REV. NO.	REVISIONS AM/COP NO.	TITLE
	AF0707--GI10GN			DRAWING INDEX SHEET 9
				PE BRIGADE HQ BUILDING
PE BH-A-01	AF0707BH-A-01			FLOOR PLAN
PE BH-A-02	AF0707BH-A-02			REFLECTED CEILING PLAN
PE BH-A-03	AF0707BH-A-03			ROOF PLAN
PE BH-A-04	AF0707BH-A-04			SECTIONS AND ELEVATIONS
PE BH-A-05	AF0707BH-A-05			ENLARGED FLOOR PLANS AND SECTIONS
PE BH-S-01	AF0707BH-S-01			FOUNDATION PLAN AND DETAILS
PE BH-S-02	AF0707BH-S-02			ROOF FRAMING PLAN
PE BH-M-01	AF0707BH-M-01			MECHANICAL FLOOR PLAN
PE BH-M-02	AF0707BH-M-02			SCHEDULES
PE BH-P-01	AF0707BH-P-01			PLUMBING PIPING PLAN
PE BH-P-02	AF0707BH-P-02			TOILET ENLARGED PLAN PLUMBING PIPING PLAN AND RISER DIAGRAMS
PE BH-P-03	AF0707BH-P-03			TOILET ENLARGED PLAN PLUMBING PIPING PLAN AND RISER DIAGRAMS
PE BH-P-04	AF0707BH-P-04			BREAK ROOM ENLARGED PLAN PLUMBING PIPING PLAN & RISER DIAGRAM
PE BH-E-01	AF0707BH-E-01			PANEL SCHEDULE AND RISER DIAGRAM
PE BH-E-02	AF0707BH-E-02			PANEL SCHEDULE
PE BH-E-03	AF0707BH-E-03			GROUNDING PLAN
PE BH-E-04	AF0707BH-E-04			LIGHTING PLAN
PE BH-E-05	AF0707BH-E-05			POWER PLAN
PE BH-E-06	AF0707BH-E-06			COMMUNICATION PLAN
				PF GARRISON HQ BUILDING
PF GQ-A-01	AF0707GQ-A-01			FLOOR PLAN
PF GQ-A-02	AF0707GQ-A-02			REFLECTED CEILING PLAN
PF GQ-A-03	AF0707GQ-A-03			ROOF PLAN
PF GQ-A-04	AF0707GQ-A-04			EXTERIOR ELEVATION
PF GQ-A-05	AF0707GQ-A-05			BUILDING SECTIONS
PF GQ-A-06	AF0707GQ-A-06			ENLARGED TOILET PLAN AND ELEVATIONS
PF GQ-S-01	AF0707GQ-S-01			FOUNDATION PLAN
PF GQ-S-02	AF0707GQ-S-02			ROOF FRAMING PLAN
PF GQ-M-01	AF0707GQ-M-01			MECHANICAL FLOOR PLAN
PF GQ-M-02	AF0707GQ-M-02			SCHEDULES
PF GQ-P-01	AF0707GQ-P-01			PLUMBING FLOOR PLAN
PF GQ-P-02	AF0707GQ-P-02			PLUMBING PART PLANS AND RISER DIAGRAMS
PF GQ-E-01	AF0707GQ-E-01			PANEL SCHEDULES AND RISER DIAGRAMS
PF GQ-E-02	AF0707GQ-E-02			PANEL SCHEDULE
PF GQ-E-03	AF0707GQ-E-03			GROUNDING PLAN
PF GQ-E-04	AF0707GQ-E-04			LIGHTING PLAN
PF GQ-E-05	AF0707GQ-E-05			POWER PLAN
PF GQ-E-06	AF0707GQ-E-06			COMMUNICATION PLAN

SHT.REF. NO.	FILE NO.	REVISIONS REV. NO.	REVISIONS AM/COP NO.	TITLE
				PG ARMS STORAGE BUILDING
PG AS-A-01	AF0707AS-A-01			FLOOR, ROOF AND REFLECTED CEILING PLANS
PG AS-A-02	AF0707AS-A-02			EXTERIOR ELEVATIONS AND BUILDING SECTIONS
PG AS-S-01	AF0707AS-S-01			FOUNDATION AND ROOF FRAMING PLAN
PG AS-M-01	AF0707AS-M-01			MECHANICAL FLOOR PLAN AND SCHEDULES
PG AS-E-01	AF0707AS-E-01			PANEL SCHEDULE AND RISER DIAGRAM
PG AS-E-02	AF0707AS-E-02			GROUNDING AND LIGHTING PLAN
PG AS-E-03	AF0707AS-E-03			POWER AND COMMUNICATION PLAN
				PI POL STORAGE BUILDING
PI PS-A-01	AF0707PS-A-01			PLANS, SECTION AND ELEVATIONS
PI PS-S-01	AF0707PS-S-01			FOUNDATION AND ROOF FRAMING PLAN
PI PS-M-01	AF0707PS-M-01			MECHANICAL FLOOR PLAN AND SCHEDULES
PI PS-E-01	AF0707PS-E-01			ELECTRICAL SYSTEMS

SYMBOL	DESCRIPTION	DATE	APR

US Army Corps of Engineers
Transatlantic Programs Center

ANA REGIONAL BRIGADE
PAKTIKA, AFGHANISTAN
DRAWING INDEX SHEET 9

DRAWING INDEX

SHT.REF. NO.	FILE NO.	REVISIONS REV. NO.	REVISIONS AM/COP NO.	TITLE
	AF0707--GI11GN			DRAWING INDEX SHEET 10
				PJ MAINTENANCE GARAGE
PJ MG-A-01	AF0707MG-A-01			FLOOR PLAN
PJ MG-A-02	AF0707MG-A-02			MEZZANINE FLOOR PLAN
PJ MG-A-03	AF0707MG-A-03			REFLECTED CEILING PLANS
PJ MG-A-04	AF0707MG-A-04			ROOF PLAN
PJ MG-A-05	AF0707MG-A-05			BUILDING ELEVATIONS
PJ MG-A-06	AF0707MG-A-06			BUILDING SECTIONS
PJ MG-A-07	AF0707MG-A-07			ENLARGED TOILETS ROOM PLANS, STAIR PLAN AND ELEVATIONS
PJ MG-S-01	AF0707MG-S-01			FOUNDATION PLAN
PJ MG-S-02	AF0707MG-S-02			MEZZANINE FLOOR FRAMING PLAN
PJ MG-S-03	AF0707MG-S-03			SECTIONS AND DETAILS
PJ MG-S-04	AF0707MG-S-04			10 M - TON CRANE SECTIONS AAND DETAILS
PJ MG-S-05	AF0707MG-S-05			2 M - TON CRANE SECTIONS AAND DETAILS
PJ MG-M-01	AF0707MG-M-01			MECHANICAL FLOOR PLAN
PJ MG-M-02	AF0707MG-M-02			MEZZANINE FLOOR PLAN
PJ MG-M-03	AF0707MG-M-03			SCHEDULES
PJ MG-M-04	AF0707MG-M-04			SCHEDULES
PJ MG-M-05	AF0707MG-M-05			TEMPERATURE CONTROL DIAGRAMS
PJ MG-P-01	AF0707MG-P-01			PLUMBING FLOOR PLAN
PJ MG-P-02	AF0707MG-P-02			ENLARGED PLANS AND RISER DIAGRAMS
PJ MG-P-03	AF0707MG-P-03			COMPRESSED AIR SYSTEM DETAILS
PJ MG-P-04	AF0707MG-P-04			COMPRESSED AIR SYSTEM AND WATER SUPPLY RISER DIAGRAM
PJ MG-E-01	AF0707MG-E-01			PANEL SCHEDULE AND RISER DIAGRAMS
PJ MG-E-02	AF0707MG-E-02			PANEL SCHEDULE
PJ MG-E-03	AF0707MG-E-03			GROUNDING PLAN
PJ MG-E-04	AF0707MG-E-04			LIGHTING PLAN
PJ MG-E-05	AF0707MG-E-05			MEZZANINE LIGHTING PLAN
PJ MG-E-06	AF0707MG-E-06			POWER AND COMMUNICATION PLAN
PJ MG-E-07	AF0707MG-E-07			MEZZANINE POWER & COMM PLAN
				SK MAINTENANCE GARAGE 3 BAY
SK BG-A-01	AF0707BG-A-01			FLOOR PLAN
SK BG-A-02	AF0707BG-A-02			MEZZANINE FLOOR PLAN
SK BG-A-03	AF0707BG-A-03			BELOW MEZZANINE REFLECTED CEILING PLAN
SK BG-A-04	AF0707BG-A-04			REFLECTED CEILING PLAN
SK BG-A-05	AF0707BG-A-05			ROOF PLAN
SK BG-A-06	AF0707BG-A-06			BUILDING ELEVATIONS
SK BG-A-07	AF0707BG-A-07			BUILDING SECTIONS
SK BG-A-08	AF0707BG-A-08			STAIR AND TOILET PLANS AND ELEVATIONS
SK BG-S-01	AF0707BG-S-01			FOUNDATION PLAN AND SECTION
SK BG-S-02	AF0707BG-S-02			MEZZANINE FLOOR FRAMING PLAN
SK BG-S-03	AF0707BG-S-03			SECTIONS AND DETAILS
SK BG-S-04	AF0707BG-S-04			2 M - TON CRANE SECTIONS AND DETAILS
SK BG-M-01	AF0707BG-M-01			MECHANICAL FLOOR PLAN AND SCHEDULES
SK BG-M-02	AF0707BG-M-02			MECHANICAL MEZZANINE FLOOR PLAN
SK BG-M-03	AF0707BG-M-03			SECTION
SK BG-M-04	AF0707BG-M-04			TEMPERATURE CONTROL

SHT.REF. NO.	FILE NO.	REVISIONS REV. NO.	REVISIONS AM/COP NO.	TITLE
SK BG-P-01	AF0707BG-P-01			PLUMBING FLOOR PLAN
SK BG-P-02	AF0707BG-P-02			ENLARGED PLUMBING PLANS AND DIAGRAMS
SK BG-P-03	AF0707BG-P-03			PLUMBING EQUIPMENT SCHEDULES & COMPRESSED AIR SYSTEM DETAILS
SK BG-P-04	AF0707BG-P-04			COMPRESSED AIR SYSTEM RISER DIAGRAM
SK BG-E-01	AF0707BG-E-01			PANEL SCHEDULES AND RISER DIAGRAMS
SK BG-E-02	AF0707BG-E-02			LIGHTING PLAN GROUND FLOOR
SK BG-E-03	AF0707BG-E-03			LIGHTING PLAN AT UNDERSIDE OF ROOF
SK BG-E-04	AF0707BG-E-04			POWER, COMMUNICATION AND GROUNDING PLAN
SK BG-E-05	AF0707BG-E-05			MEZZANINE POWER AND COMMUNICATION PLAN
SK BG-E-06	AF0707BG-E-06			COMMUNICATION PLAN
				PK REFUELER POINT
PK FP-M-01	AF0707PK-M-01			FLOOR PLAN AND ELEVATION
PK FP-E-01	AF0707PK-E-01			RISER DIAGRAMS AND DETAILS
PK FP-E-02	AF0707PK-E-02			POWER, LIGHTING AND GROUNDING PLAN

SYMBOL	DESCRIPTION	DATE	APR

US Army Corps of Engineers
Transatlantic Programs Center

ANA REGIONAL BRIGADE
PAKTIKA, AFGHANISTAN

DRAWING INDEX SHEET 10

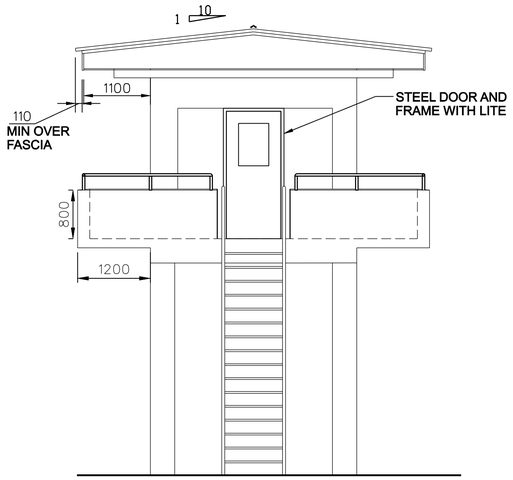

ELEVATION
SCALE = 1:50
3 A-1 A-1

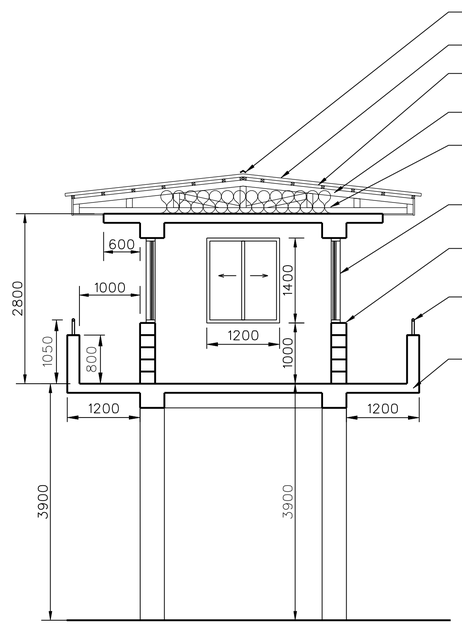

SECTION
SCALE = 1:50
2 A-1 A-1

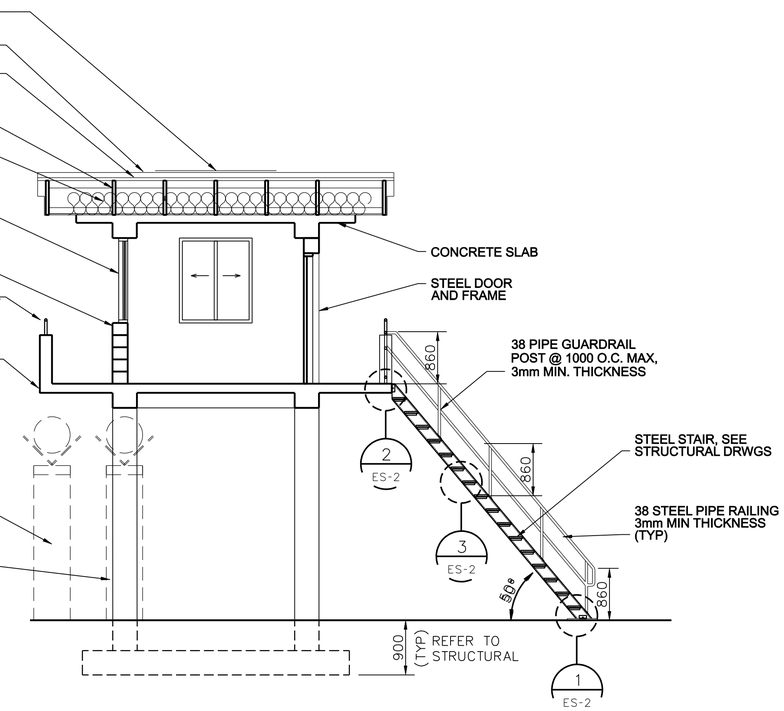

SECTION
SCALE = 1:50
1 A-1 A-1

NOTE:
1. Provide window units meeting UL 752, level 5, but no less than 16 mm laminated single glazed. This standard shall apply to all window units within guard shack, guard house, guard tower, and guard rooms in Headquarters Building.

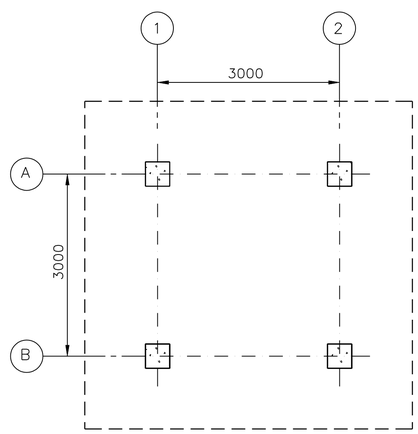

GROUND LEVEL PLAN
SCALE = 1:50

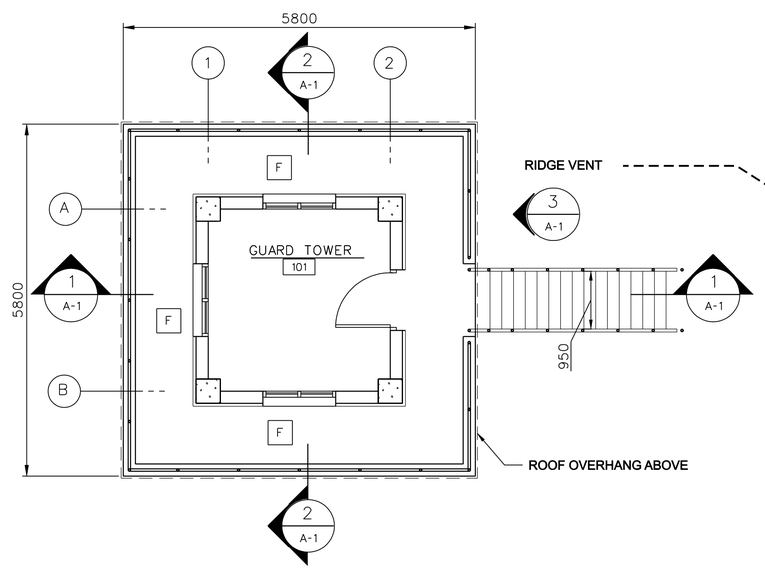

FIRST FLOOR PLAN
SCALE = 1:50

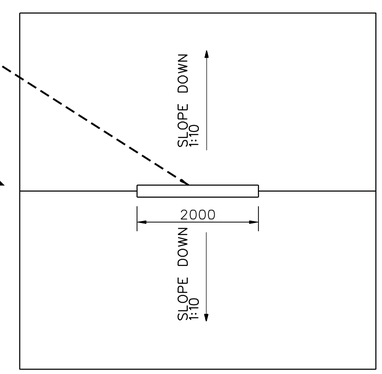

ROOF PLAN
SCALE = 1:50

1 0 1 2 3 4
1:50

SYMBOL	DESCRIPTION	DATE	APP
-	REVISIONS	03/04/2007	
-	REVISIONS	03/05/2007	

DESIGNED BY: HMH
DATE: 06-27-07
DWN BY: HMH
SUBMITTED BY: PHILIP J. DINELLO CHIEF, PDT FACILITIES DES.
CHK BY: HMH
FILE NO.: AF0707 E-AR01PN

US Army Corps of Engineers Transatlantic Programs Center

ANA REGIONAL BRIGADE
PAKTIKA, AFGHANISTAN

GUARD TOWER
FLOOR PLAN, SECTION
ELEVATION AND ROOF PLAN

SHEET REFERENCE NUMBER:
K
A-1

D SIZE BORDER
32 X 20.5

AF0609E-ar01pn.dwg
5/5/2007 8:30 AM
AED AED USACE
6/25/2007
h:\Projects\Afghanistan\af0707\af0707k\arc\AF0707K-ar01pn.dwg

STRUCTURAL NOTE:
REFER TO STRUCTURAL DRAWINGS FOR ALL REINFORCEMENTS, BEAMS, SLABS, AND COLUMN INFORMATION.

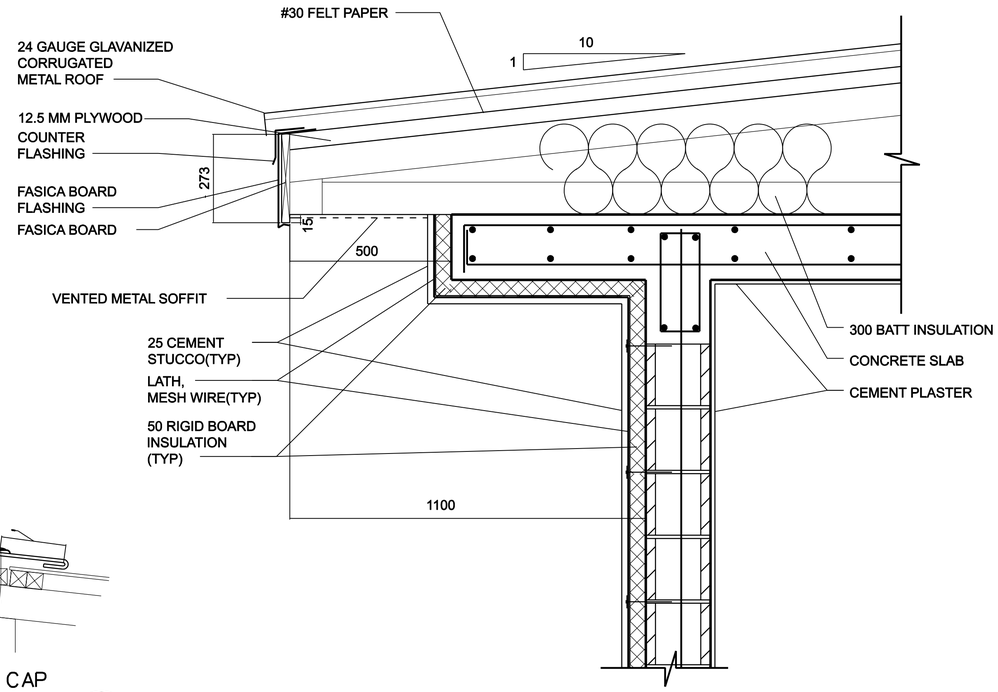

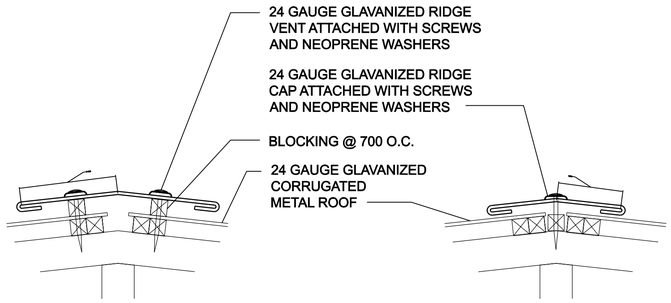

TYPICAL RIDGE VENT SECTION (4 / S-1 | S-3)
N.T.S.

TYPICAL RIDGE CAP SECTION (5 / S-1 | S-3)
N.T.S.

GUARD TOWER OVERHANG SECTION (6 / S-1 | S-3)
N.T.S.

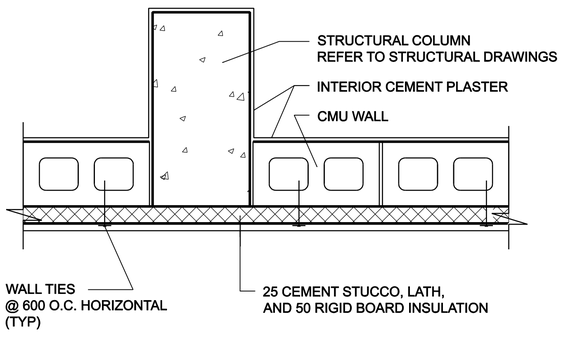

TYPICAL EXTERIOR WALL PLAN SECTION (2 / S-1 | S-3)
N.T.S.

NOTE:
1. WALL TIES, VERTICAL SPACING SHALL BE 40O (16 INCH) O.C. AND HORIZONTAL SPACING SHALL BE 600 (24 INCH) O.C.

2. WALL TIES SHALL BE GALVANIZED AND HAVE WASHERS NO SMALLER THAN 40 (1.5 INCH) DIAMETER.

SYMBOL	DESCRIPTION	DATE	APP

DESIGNED BY: HMH
DWN BY: HMH
CHK BY: HMH
DATE: 06-27-07
SUBMITTED BY: PHILIP J. DINELLO, CHIEF, PDT FACILITIES DES.
FILE NO.: AF0707K-AR02DT

US Army Corps of Engineers Transatlantic Programs Center

ANA REGIONAL BRIGADE
PAKTIKA, AFGHANISTAN

GUARD TOWER
PLAN AND SECTION DETAILS

SHEET REFERENCE NUMBER:
K
A-2

D SIZE BORDER
32 X 20.5

AF0609E-ar02dtl.dwg
5/5/2007 7:33 AM
AED AED USACE
6/25/2007
h:\Projects\Afghanistan\af0707\af0707k\arc\AF0707K-ar02dtl.dwg

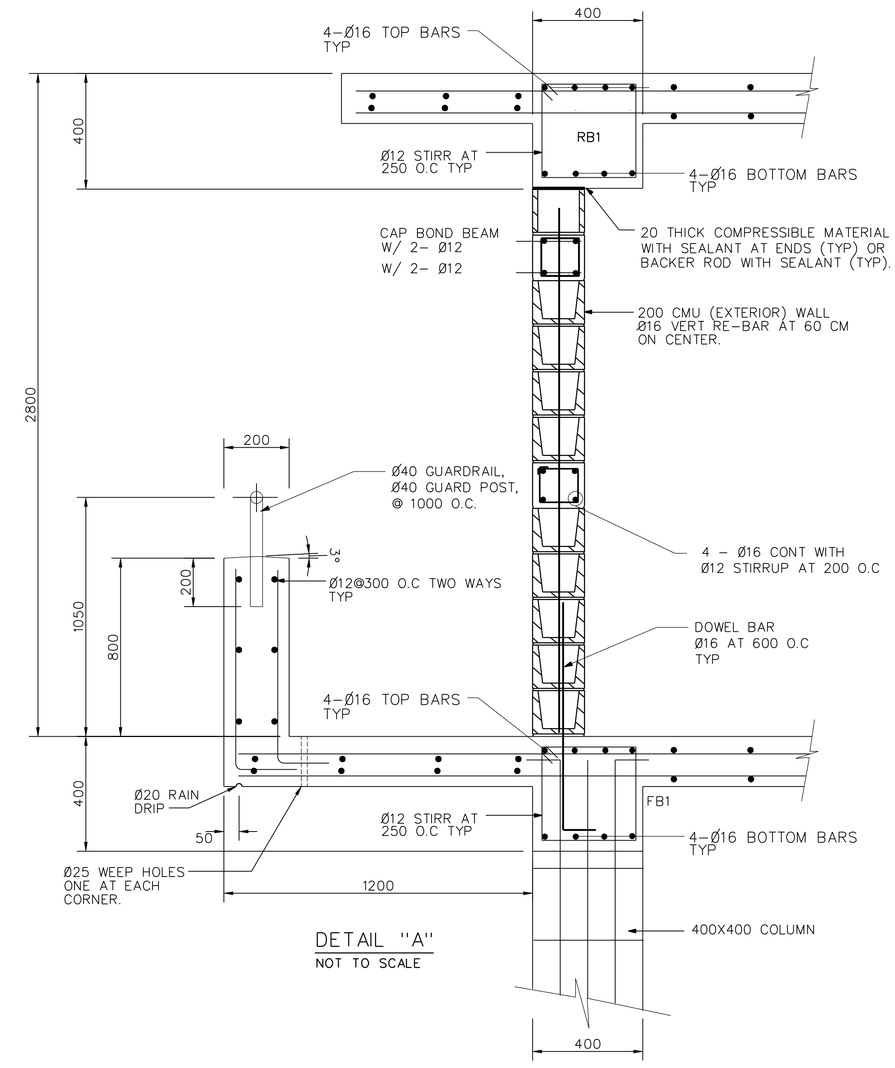

DETAIL "A"
NOT TO SCALE

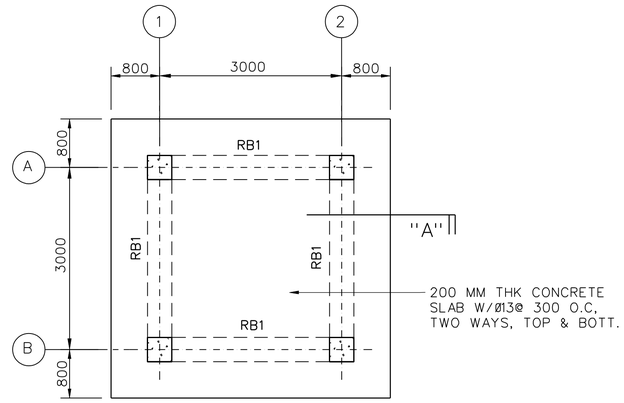

ROOF FRAMING PLAN
SCALE= 1:50

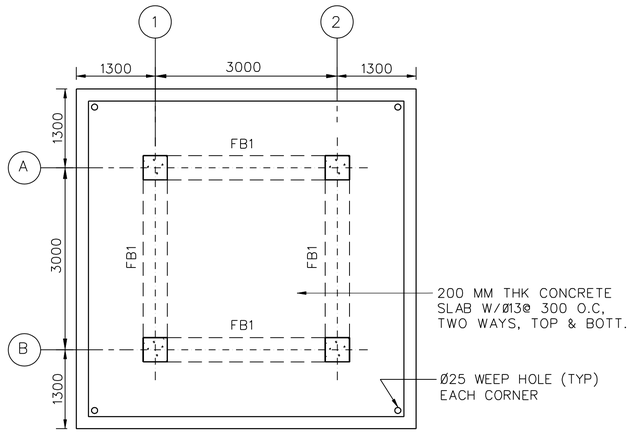

FIRST FLOOR PLAN
SCALE= 1:50

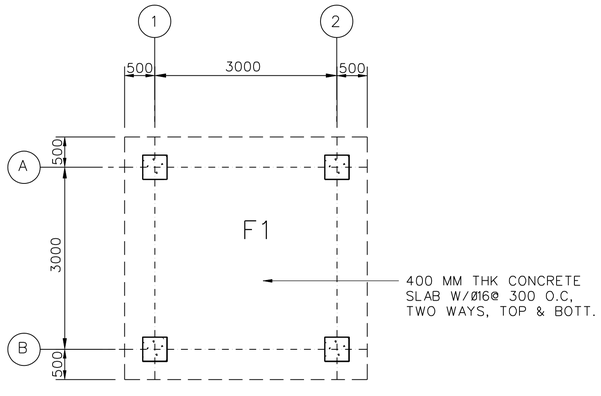

FOUNDATION AND SLAB PLAN
SCALE= 1:50

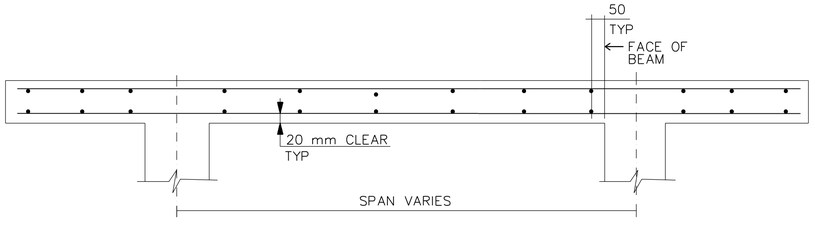

TYPICAL SECTIONS FOR STRUCTURAL SLABS
NOT TO SCALE

GENERAL NOTES

1. DESIGN LOADS (SERVICE)

LIVE LOADS:

ROOF: 1.0 KPA (20 PSF)
OTHERS: 4.8 KPA (100 PSF)
8.9 KN (2.0 K) CONCENTRATED LOAD

WIND LOADS PER IBC-2003

USING A "3-SECOND" WIND VELOCITY OF 125 KPH
EXPOSURE C AND IMPORTANCE FACTOR I=1.0

EARTHQUAKE LOADS PER IBC-2003:

USING A SEISMICITY: S_s=1.65g AND S_1 =0.75g

2. MATERIALS:

CONCRETE: 28 MPa (4 KSI)
CYLINDER STRENGTH AT 28 DAYS

REINFORCING: ASTM A615 GRADE 60 (60 KSI)

WELDED WIRE FABRIC: ASTM A185

CONCRETE MASONRY UNITS:
ASTM C90, TYPE I (NORMAL WEIGHT, MOISTURE CONTROLLED) MORTAR, ASTM C270, TYPE S
GROUT, ASTM C 476
JOINT REINFORCEMENT, LADDER TYPE

3. WORK THESE STRUCTURAL DRAWINGS WITH THE STANDARD-DETAILS DRAWINGS CO-S-01 THRU CO-S-10.

4. A RELATIVE (DATUM) FINISH FLOOR ELEVATION EQUAL TO 100.00 M. IS USED AS REFERENCE ELEVATION FOR ALL STRUCTURAL DRAWINGS. REFER TO CIVIL DRAWINGS FOR ACTUAL FINISH ELEVATIONS.

5. FOUNDATIONS ARE DESIGNED USING AN ALLOWABLE BEARING PRESSURE OF 0.75 KG/SQ. CM (1500 PSF), AND BOTTOM OF FOOTINGS ARE PLACED AS SHOWN ON DRAWINGS. GEOTECHNICAL INVESTIGATION SHALL CONFIRM BEARING CAPACITY TO BE NO LESS THAN 0.75 KG/SQ CM. IF GEOTECHNICAL INVESTIGATION SHOWS LESS THAN 0.75 KG/SQ CM THE CONTRACTOR SHALL REDESIGN FOOTINGS BASED ON THE GEOTECHNICAL INVESTIGATION. SEE SPECIFICAITON 01015 PARAGRAPH, GEOTECHNICAL, FOUNDATION AND SURVEY.

CRITICAL NOTES

1. ALL CELLS OF CMU WALL SHALL BE FULLY GROUTED AND PROVIDE Ø16 MM RE–BARS AT 60 CM ON CENTER.

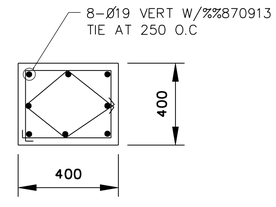

TYP COLUMN
REINFORCING DET

1:50

SYMBOL	REVISIONS	DESCRIPTION	DATE	APP
*	REVISIONS		03/04/2007	
*	REVISIONS		03/05/2007	

DESIGNED BY: TCP
DATE: 06-27-07
DWN BY: TCP
SUBMITTED BY: PHILIP J. DINELLO CHIEF, PDT FACILITIES DES.
CHK BY: KGO
FILE NO.: AF0707K-SB01PN

US Army Corps of Engineers Transatlantic Programs Center

ANA REGIONAL BRIGADE
PAKTIKA, AFGHANISTAN

GUARD TOWER
FOUNDATION AND SLAB PLAN
ROOF FRAMING PLAN

SHEET REFERENCE NUMBER:
K
S-1

D SIZE BORDER
32 X 20.5

AR0609E–SB01PN.dwg
3/29/2007 2:48 PM
6/25/2007
h:\projects\afghanistan\af0707\af0707k\str\AR0707K-SB01PN.dwg
AED, AED, USACE

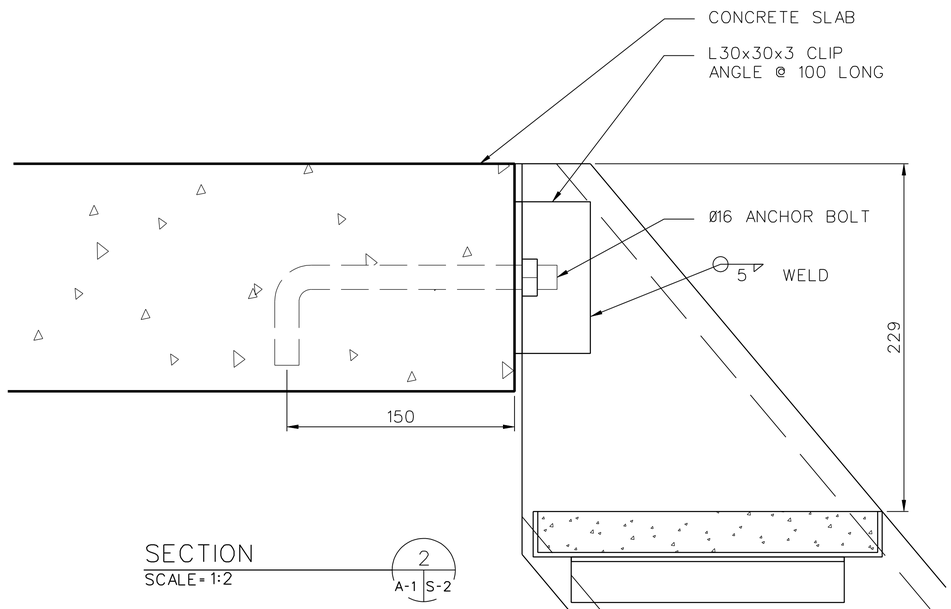

SECTION 2 (A-1 | S-2)
SCALE = 1:2

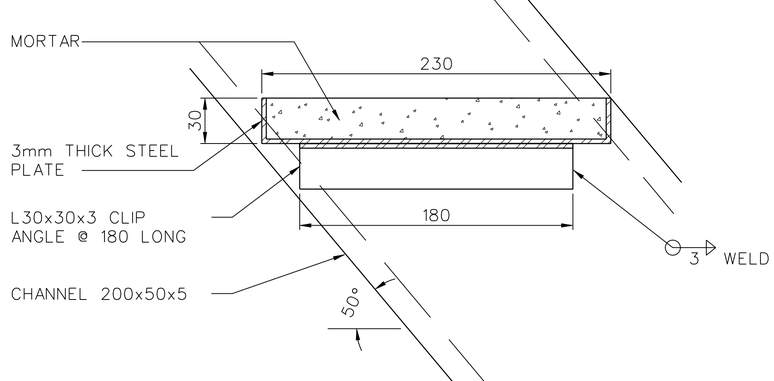

SECTION 3 (A-1 | S-2)
SCALE = 1:2

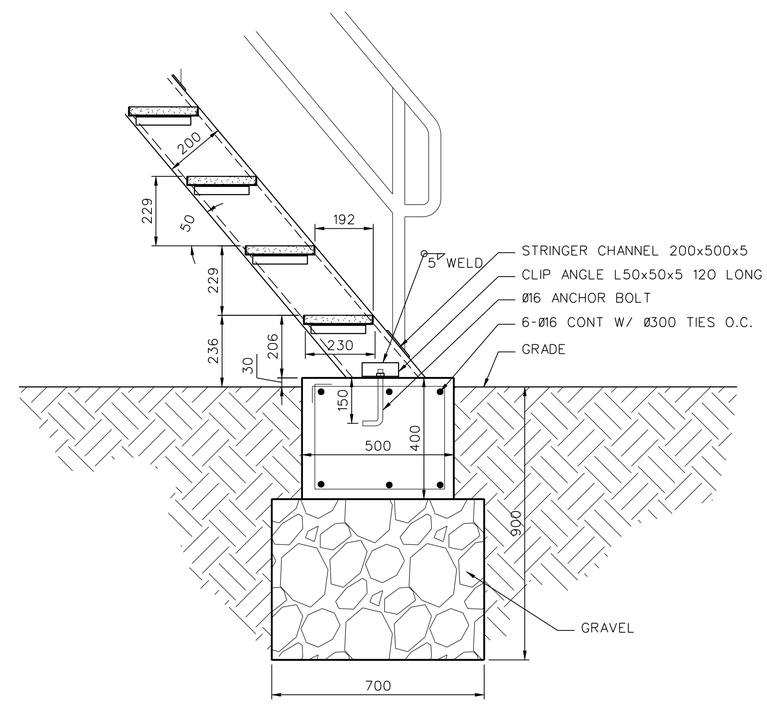

SECTION 1 (A-1 | S-2)
SCALE = 1:10

SYMBOL	REVISIONS	DESCRIPTION	DATE	APP
•			03/04/2007	

DESIGNED BY: JK
DATE: 06-27-07
DWN BY: HMH
SUBMITTED BY: PHILIP J. DINELLO, CHIEF, FOT FACILITIES DES.
CHK BY: JK
FILE NO.: AF0707E-SB02DT

US Army Corps of Engineers
Transatlantic Programs Center

ANA REGIONAL BRIGADE
PAKTIKA, AFGHANISTAN

GUARD TOWER
STAIR DETAILS

SHEET REFERENCE NUMBER:
K
S-2

AR0609E-SB02DT.dwg
3/29/2007 7:06 PM
6/25/2007
n:\projects\afghanistan\af0707\af0707k\str\AR0707K-SB02DT.dwg
AED AED, USACE

D SIZE BORDER
32 X 20.5

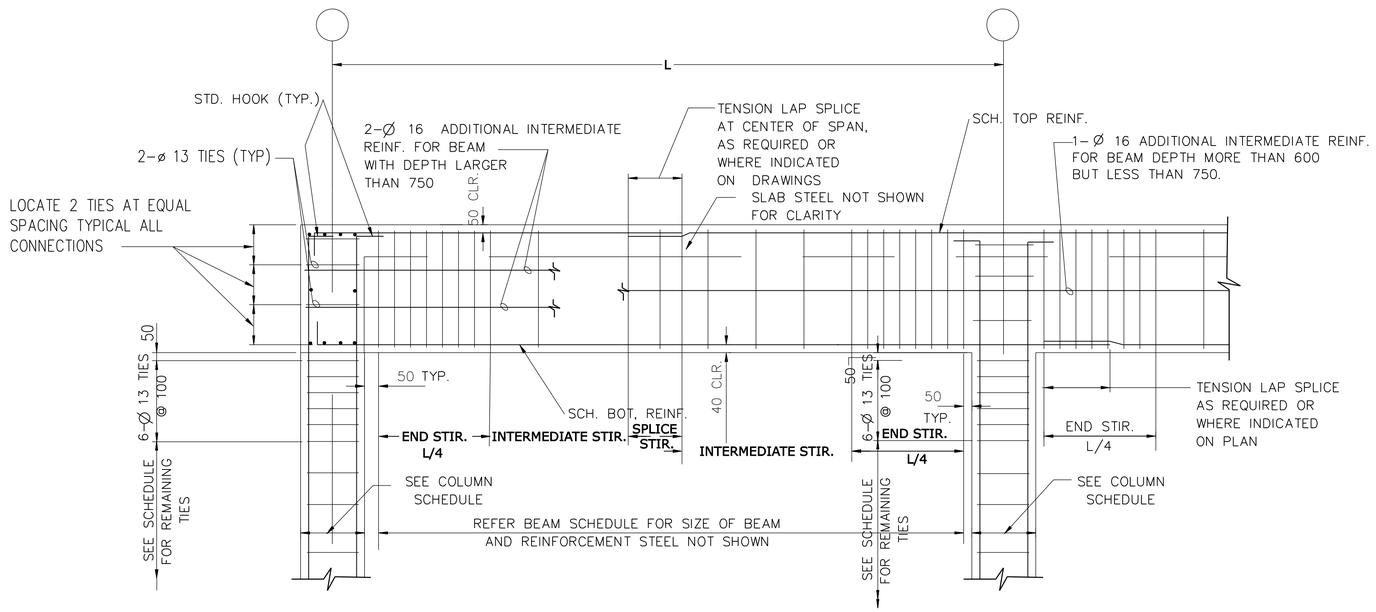

TYPICAL BEAM TO COLUMN END CONNECTION

DETAIL B S-3 / S-3
SCALE = N.T.S.

TYPICAL BEAM TO COLUMN INTERIOR CONNECTION

DETAIL C S-3 / S-3
SCALE = N.T.S.

SYMBOL	DESCRIPTION	DATE	APP
*	REVISIONS	03/04/2007	

DESIGNED BY: RG
DATE: 06-27-07
DWN BY: VLC
SUBMITTED BY: PHILIP L. DINELLO, CHIEF, PDT FACILITIES DES.
CHK BY: JK
FILE NO.: AF0707E-SF03DT

US Army Corps of Engineers Transatlantic Programs Center

ANA REGIONAL BRIGADE
PAKTIKA, AFGHANISTAN
GUARD TOWER
SLAB-ON-GRADE DETAILS

SHEET REFERENCE NUMBER:
K
S-3

AR0609E-SF03DT.dwg
3/29/2007 7:33 PM
AED, AED, USACE
6/25/2007
h:\projects\afghanistan\af0707\af0707k\str\AR0707K-SF03DT.dwg

D SIZE BORDER
32 X 20.5

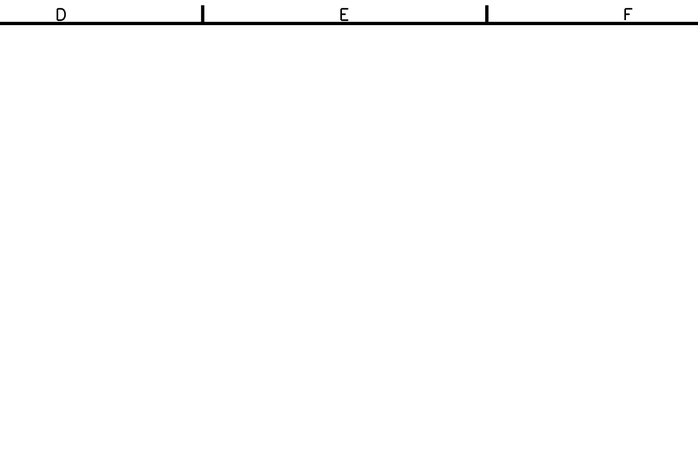

HVAC PLAN
SCALE: 1:50

SYMBOL	DESCRIPTION	DATE	APP

DESIGNED BY: JMR
DATE: 06-27-07
DWN BY: JMR
SUBMITTED BY: RAVI GREWAL, CHIEF, PDT BLDG SYSTEMS
CHK BY: RMS/HMH
FILE NO.: AF0707E-MH01PN

US Army Corps of Engineers Transatlantic Programs Center

ANA REGIONAL BRIGADE
PAKTIKA, AFGHANISTAN

GUARD TOWER

HVAC PLAN

SHEET REFERENCE NUMBER:
K
M-1

AFGOEDE-MH01PN.dwg
4/1/2007 4:32 PM
AED AED, USACE
6/26/2007
h:\projects\afghanistan\af0707\af0707k\mec\AF0707K-MH01PN.dwg

D SIZE BORDER
32 X 20.5

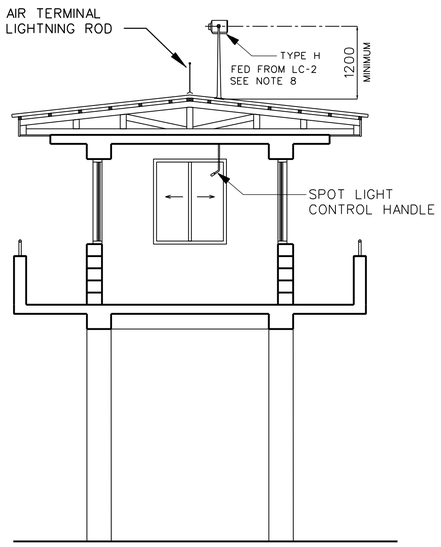

SPOTLIGHT MOUNTING DETAIL

NOT TO SCALE

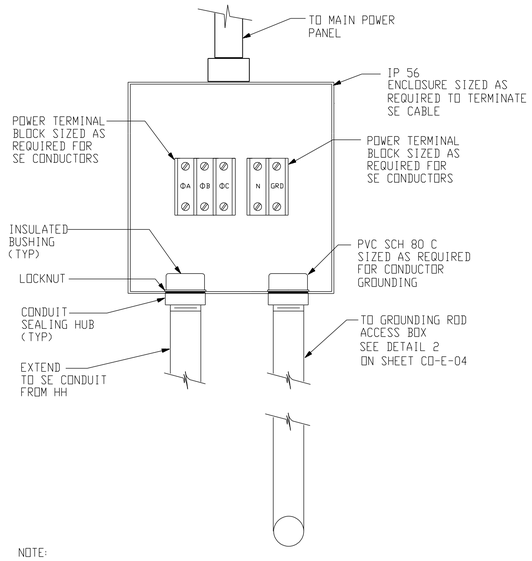

NOTE:

1. CONTRACTOR SHALL PROVIDE AND INSTALL SE JUNCTION BOX FOR EACH GUARD TOWER. IF BUILDING (BLDG) SE CABLES ARE TOO LARGE TO TERMINATE AT MAIN POWER PANEL CONTRACTOR SHALL PROVIDE SE JUNCTION BOX TO TERMINATE SE CABLES FROM HH.
2. CONTRACTOR SHALL SIZE AND PROVIDE SE CONDUIT FROM SE JUNCTION BOX TO BLDG MAIN POWER PANEL. CONTRACTOR SHALL ALSO SIZE AND PROVIDE SERVICE FEEDERS FROM SE JUNCTION BOX TO MAIN POWER PANEL.

5 | DETAIL # 2: SERVICE ENTRANCE (SE) JUNCTION BOX

AR0607B-EL01PN | SCALE: NTS

NOTES:

1. FOR LEGEND, ABBREVIATIONS AND LIGHT FIXTURE SCHEDULE SEE SHEET CO-E-01, AND CO-E-02.
2. COORDINATE LOCATION OF ALL ELECTRICAL DEVICES AND EQUIPMENT WITH ALL OTHER TRADES.
3. ALL WIRING SHALL BE IN CONCEALED OR SURFACE MOUNTED METAL CONDUIT.
4. PLAN IS TYPICAL FOR ALL GUARD TOWERS
5. PROVIDE 100MM METAL CONDUIT WITH TWO 16mm COPPER CONDUCTORS AND 16mm COPPER GROUNDING CONDUCTOR TO JUNCTION BOX.
6. PROVIDE A MANUFACTURER SUPPLIED RED, BLUE, AND BLACK LIGHT FIXTURE GLOBES.
7. PROVIDE A 4PAIR, CAT5e UTP CABLE IN 25mm CONDUIT TO THE TELEPHONE TERMINAL CABINET. TELEPHONE TERMINAL CABINET SHALL BE CONNECTED TO A HANDHOLE 1 METER OUTSIDE OF THE TOWER. COORDINATE EXACT LOCATION WITH THE CONTRACTING OFFICER
8. SPOT LIGHT SHALL BE BALLISTIC RESISTANT TYPE AND SHALL HAVE ANTI-SHOCK LAMPHOLDER TO PREVENT BREAKAGE OF THE FILAMENT DUE TO IMPACT FROM BULLETS
9. GROUNDING COUNTERPOISE SHALL BE 760mm BELOW FINISHED GRADE (BFG) AND 1.5M FROM BUILDING FOUNDATION. ALL CONNECTIONS SHALL BE EXOTHERMIC WELD, SEE SHEET CO-E-04.
10. PROVIDE 20A/2P/240V NON-FUSED DICONNECT SWITCH IN NEMA 3R ENCLOSURE.

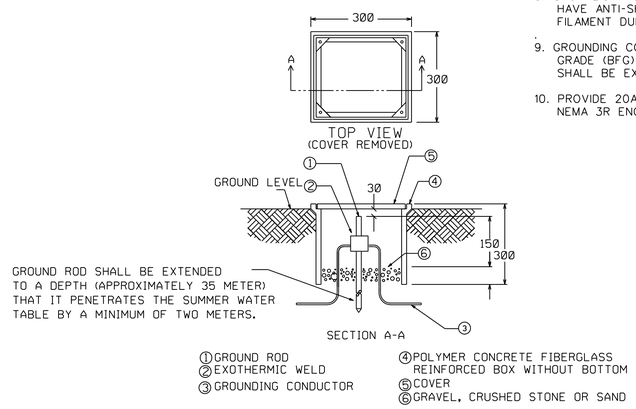

GROUND ROD PIT DETAIL

NOT TO SCALE

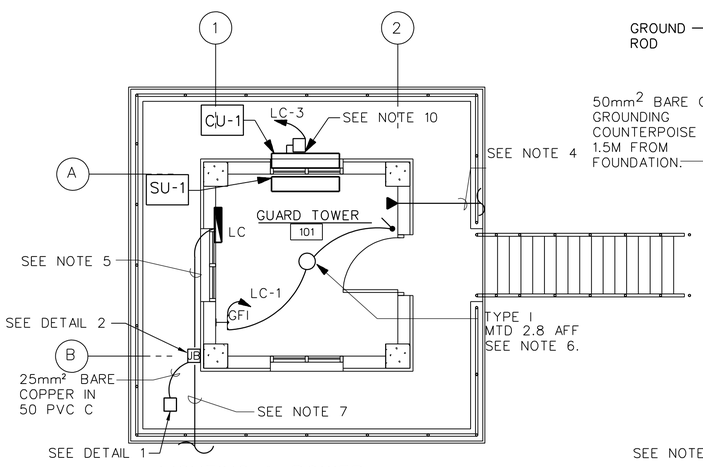

LIGHTING & POWER

NOT TO SCALE

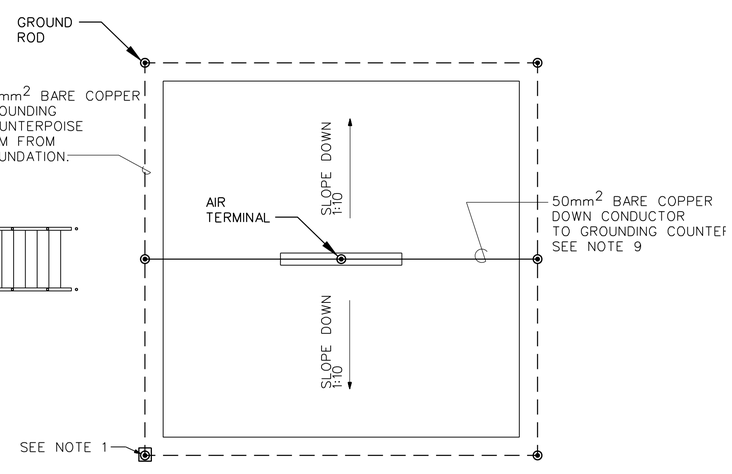

GROUNDING AND LIGHTNING PROTECTION SYSTEM

NOT TO SCALE

LOAD CENTER "E" GUARD TOWER (SEE NOTE 4)

40 AMP MAIN CIRCUIT BREAKER, 220V, 1 PH, 2W, 50 HZ, 100A BUS, 10000 AIC

CKT. NO.	TRIP AMPS	NO. POLES	WIRE MM²	GND MM²	CONDUIT MM	LOAD SERVED	LOAD-V.A.
1	20	1	4	4	20	LIGHTING & RECEPTACLES	280
2	20	1	4	4	20	SPOT LIGHT, 1000W	1000
3	25	1	6	6	20	CU-1	4000
4	20	1				SPARE	
5	20	1				SPARE	
6						SPACE	
7						SPACE	
8						SPACE	
						TOTAL CONN. LOAD	3905

TOTAL CONN. LOAD 3.9 KVA.

80 %DEMAND = EST. DEMAND LOAD: 3.12 SERVED FROM: ____

SYMBOL	REVISIONS	DESCRIPTION	DATE	APP
.			03/04/2007	

DESIGNED BY: DLF | DATE: 06-27-07
DWN BY: FHG | SUBMITTED BY: RAVI GREWAL, CHIEF, PDT BLDG SYSTEMS
CHK BY: RMS/DK | FILE NO.: AF0707E-EL01PN

US Army Corps of Engineers Transatlantic Programs Center

ANA REGIONAL BRIGADE
PAKTIKA, AFGHANISTAN
GUARD TOWER
LIGHTING & POWER PLAN

SHEET REFERENCE NUMBER:
K
E-1

AF0609E-el01pn.dwg
4/11/2007 1:38 PM
AED AED_USACE
6/26/2007
h:\Projects\Afghanistan\af0707\af0707k\ele\AF0707K-el01pn.dwg

D SIZE BORDER
32 X 20.5

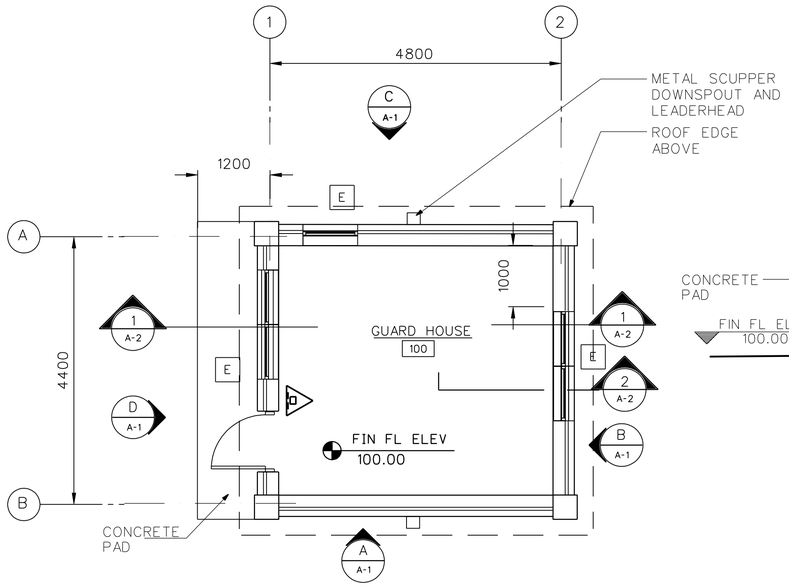

FLOOR PLAN
SCALE = 1:50

PROVIDE PORTABLE FIRE EXTINGUISHER, ABC

DRY CHEMICAL 4A:60B:C

NOTE:
1. Provide window units meeting UL 752, level 5, but no less than 16 mm laminated single glazed. This standard shall apply to all window units within guard shack, guard house, guard tower, and guard rooms in Headquarters Building.

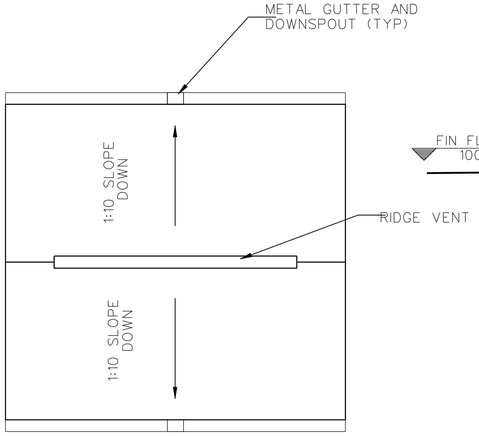

ROOF PLAN
SCALE = 1:50

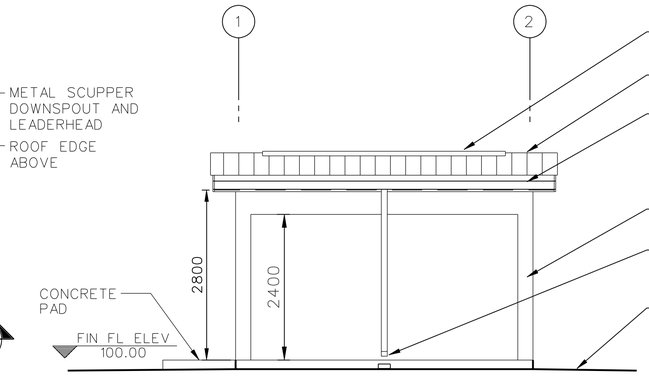

ELEVATION A
SCALE = 1: 50

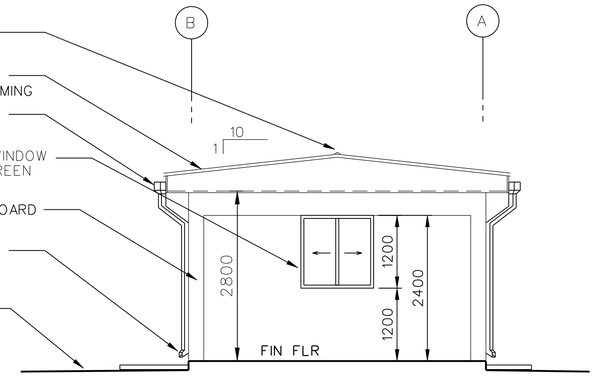

ELEVATION B
SCALE = 1: 50

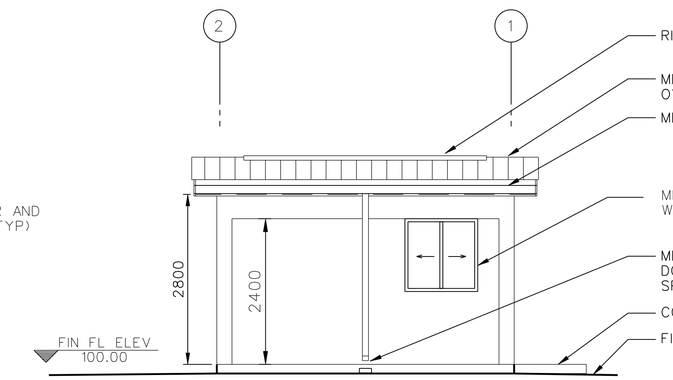

ELEVATION C
SCALE = 1: 50

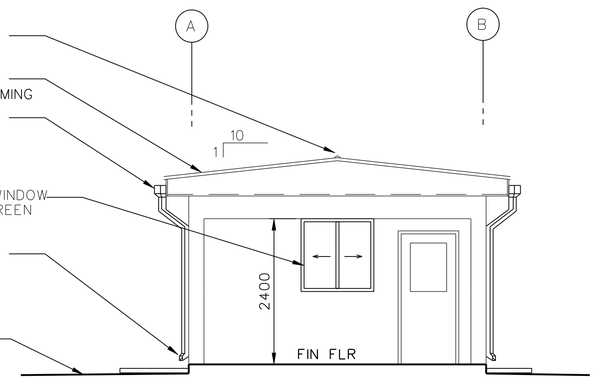

ELEVATION D
SCALE = 1: 50

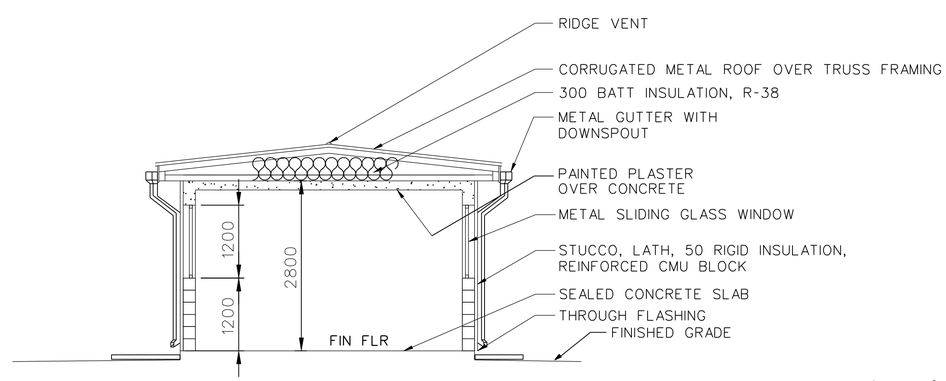

SECTION 1
SCALE 1 : 50

1 0 1 2 3 4
1:50

REVISIONS			
SYMBOL	DESCRIPTION	DATE	APP
		03/04/2007	

DESIGNED BY: YSK	DATE: 06-27-07
DWN BY: JSG/YSK	SUBMITTED BY: PHILIP L. DINELLO CHIEF, PDT FACILITIES DES
CHK BY: YSK/HMH	FILE NO.: AF0707L-AR01PN

US Army Corps of Engineers Transatlantic Programs Center

ANA REGIONAL BRIGADE
PAKTIKA, AFGHANISTAN

GUARD HOUSE
FLOOR PLAN, ROOF PLAN, AND ELEVATIONS

SHEET REFERENCE NUMBER:
L
A-1

D SIZE BORDER
32 X 20.5

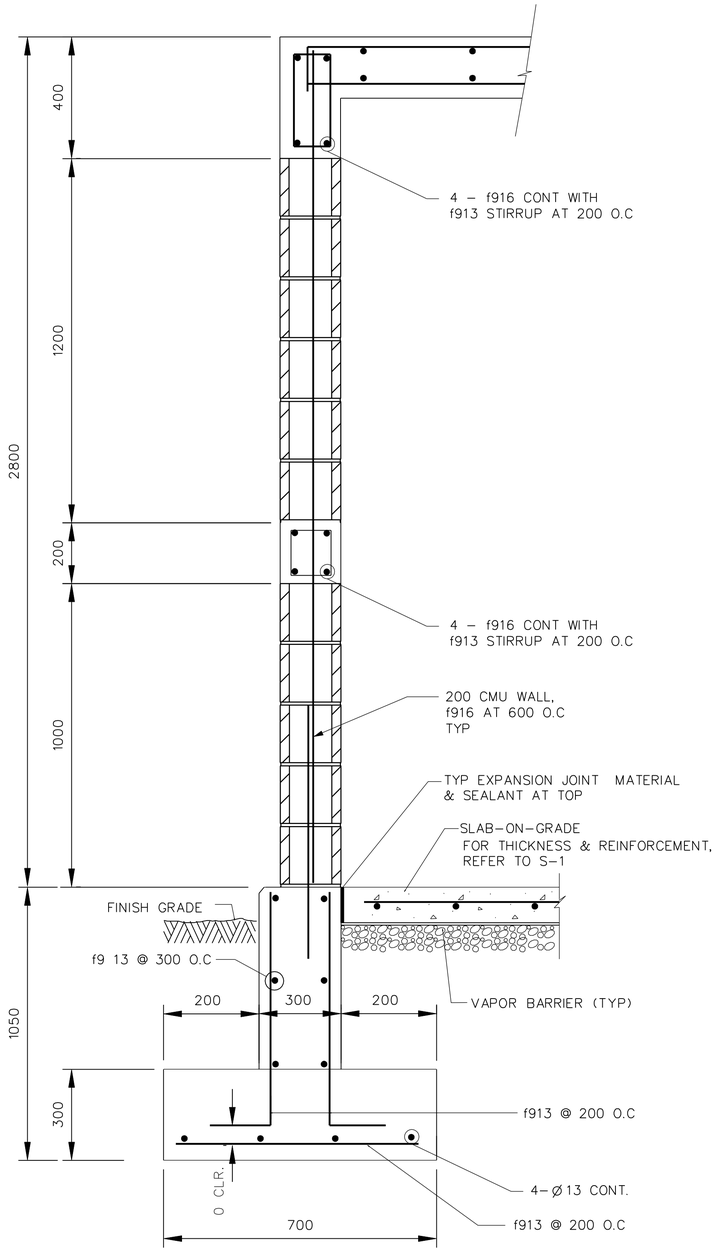

TYP EXTERIOR WALL SECTION

NOT TO SCALE

1 S-1 S-1

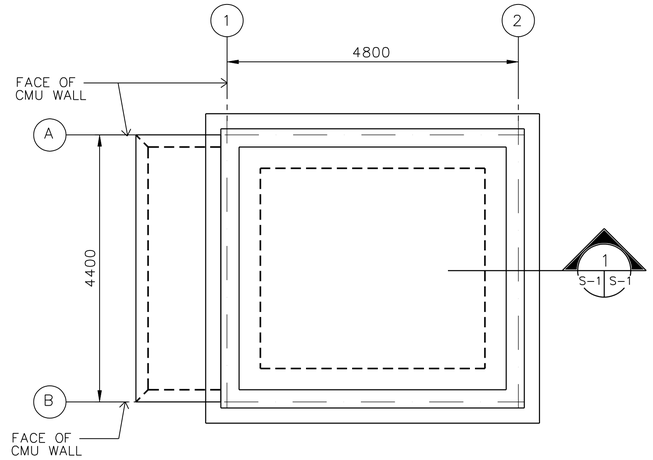

SLABS ON GRADE (TYP):

150 MM THK CONC SLAB ON GRADE WITH f913 AT 300 MM ON CENTER TWO WAYS. 150 MM THK CAPILLARY WATER BARRIER ON 95% COMPACTED GROUND.

FOUNDATION AND SLAB PLAN

SCALE= 1:50

N

PLAN NORTH

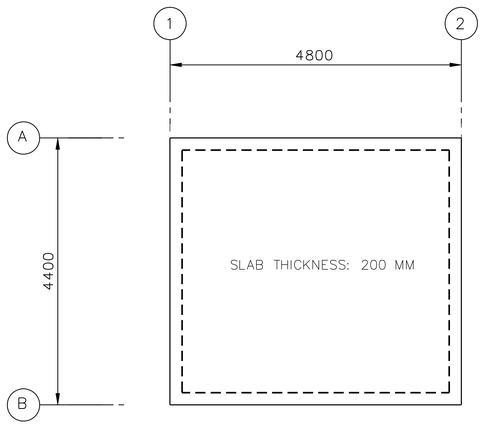

TOP BAR: Ø13 AT 300 MM ON CENTER TWO WAYS
BOTTOM BAR: ø 13 AT 300 MM ON CENTER TWO WAYS.

ROOF FRAMING AND SLAB PLAN

SCALE= 1:50

GENERAL NOTES

1. DESIGN LOADS (SERVICE)

   LIVE LOADS:

   ROOF: 1.0 KPA (20 PSF)
   OTHERS: 4.8 KPA (100 PSF)
   8.9 KN (2.0 K) CONCENTRATED LOAD

   WIND LOADS PER IBC-2003

   USING A "3-SECOND" WIND VELOCITY OF 125 KPH
   EXPOSURE C AND IMPORTANCE FACTOR I=1.0

   EARTHQUAKE LOADS PER IBC-2003:

   USING A SEISMICITY: Ss=1.65g AND S_1 =0.75g

2. MATERIALS:

   CONCRETE: 28 MPa (4 KSI)
   CYLINDER STRENGTH AT 28 DAYS

   REINFORCING: ASTM A615 GRADE 60 (60 KSI)

   WELDED WIRE FABRIC: ASTM A185

   CONCRETE MASONRY UNITS:
   ASTM C90, TYPE I (NORMAL WEIGHT, MOISTURE CONTROLLED) MORTAR, ASTM C270, TYPE S
   GROUT, ASTM C 476
   JOINT REINFORCEMENT, LADDER TYPE

3. WORK THESE STRUCTURAL DRAWINGS WITH THE STANDARD-DETAILS DRAWINGS.

4. A RELATIVE (DATUM) FINISH FLOOR ELEVATION EQUAL TO 100.00 M. IS USED AS REFERENCE ELEVATION FOR ALL STRUCTURAL DRAWINGS. REFER TO CIVIL DRAWINGS FOR ACTUAL FINISH ELEVATIONS.

5. FOUNDATIONS ARE DESIGNED USING AN ALLOWABLE BEARING PRESSURE OF 0.75 KG/SQ. CM (1500 PSF), AND BOTTOM OF FOOTINGS ARE PLACED AS SHOWN ON DRAWINGS. GEOTECHNICAL INVESTIGATION SHALL CONFIRM BEARING CAPACITY TO BE NO LESS THAN 0.75 KG/SQ CM. IF GEOTECHNICAL INVESTIGATION SHOWS LESS THAN 0.75 KG/SQ CM THE CONTRACTOR SHALL REDESIGN FOOTINGS BASED ON THE GEOTECHNICAL INVESTIGATION. SEE SPECIFICAITON 01015 PARAGRAPH, GEOTECHNICAL, FOUNDATION AND SURVEY.

CRITICAL NOTES

1. ALL CELLS OF CMU WALL SHALL BE FULLY GROUTED AND PROVIDE 16 MM RE–BARS AT 60 CM ON CENTER.

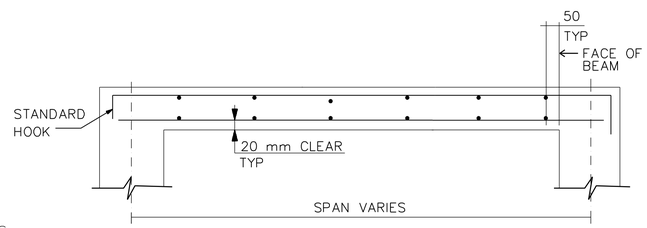

TYPICAL SECTIONS FOR STRUCTURAL SLABS

NOT TO SCALE

1 0 1 2 3 4
1:50

SYMBOL	REVISIONS	DESCRIPTION	DATE	APP
*			03/04/2007	

DESIGNED BY: JK
DATE: 06-27-07
DWN BY: JK
SUBMITTED BY: RAVI GREWAL, CHIEF, PDT BLDG SYSTEMS
CHK BY: JK
FILE NO.: AF0707D-SB01PN

US Army Corps of Engineers Transatlantic Programs Center

ANA REGIONAL BRIGADE
PAKTIKA, AFGHANISTAN

GUARD HOUSE
FOUNDATION AND SLAB PLAN
ROOF FRAMING PLAN

SHEET REFERENCE NUMBER:
L
S-1

6/26/2007
h:\projects\afghanistan\af0707\af0707\str\af0707l-sb01n.dwg

D SIZE BORDER
32 X 20.5

SPLIT SYSTEM AIR CONDITIONING HEAT PUMP SCHEDULE (SU/CU)

UNIT NO.	CAPACITY * (KW)		AIR QUANTITY CMH	ELECTRICAL DATA				REMARKS
	COOLING	HEATING		KW	VOLTS	PH	HZ	
SU-1 CU-1	1.5	1.6	590	1.5	220	1	50	HIGH WALL MOUNTED INDOOR UNIT (1)

* MINIMUM EQUIPMENT CAPACITY AS RATED AT 36 °C DB/16.7 °C WB (SUMMER OUTDOOR TEMPERATURE)
AT -12.8 °C DB (WINTER OUTDOOR TEMPERATURE)
AT 2133 M ELEVATION

(1) PROVIDE AUXILIARY ELECTRIC HEATING COIL IN THE INDOOR UNIT TO SUPPLEMENT HEAT PUMP CAPACITY OR TO MEET LOW AMBIENT OPERATIONS IN WINTER.

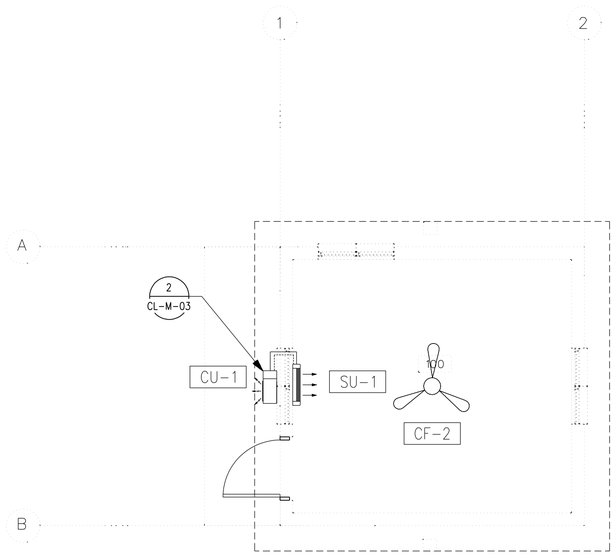

HVAC PLAN
SCALE: 1: 50

CEILING FAN SCHEDULE (CF)

UNIT NUMBER	TYPE (NOTE 1)	FAN DIAMETER	MAX WATTS	ELECTRICAL DATA			REMARKS
				VOLTS	PHASE	HERTZ	
CF-2	A	56 IN	65	220	1	50	3-SPEED

NOTES:-

1- (A) WITHOUT LIGHT FIXTURE
2- BOTTOM OF FAN MOUNTING HEIGHT = MINIMUM 2500mm A.F.F
3- PROVIDE WITH REMOTE WALL MOUNTED, ON-OFF SWITCH LOCATED ON ELECTRICAL DRAWINGS.

1 0 1 2 3 4
1:50

SYMBOL	DESCRIPTION	DATE	APR

DESIGNED BY: RMS
DATE: 06-27-07
DWN BY: JMC
SUBMITTED BY: RAVI GREWAL CHIEF, PDT BLDG. SYSTEMS
CHK BY: RSG
FILE NO.: AF0707L-MH01PN

US Army Corps of Engineers Transatlantic Programs Center

ANA REGIONAL BRIGADE
PAKTIKA, AFGHANISTAN

GUARD HOUSE
HVAC PLAN

SHEET REFERENCE NUMBER:
L
M-1

6/26/2007
h:\projects\afghanistan\af0707\af0707\mec\AF0707L-MH01PN.DWG

GUARD HOUSE PANEL PP

AIC ; 25KA

100AF/32AT MCB

MLO

VOLTAGE 380/220V, 3PH, 5W, 50HZ

FEED TOP

MOUNTING FLUSH

LOCATION GUARD HOUSE

DESCRIPTION	A	B	C	AMP	POLE	CKT	A B C	CKT	POLE	AMP	A	B	C	DESCRIPTION
	LOAD (VA)										LOAD (VA)			
RECEPTACLE	180			20	1	1		2	1	20	200			GH LIGHT
TTC RECEPTACLE		180		20	1	3		4	1	20		100		CF-1
CU-1/SU-1			1875	20	1	5		6	1	20			100	FOR FUTURE SELF DETECTORS
SPARE				20	1	7		8	1	20				SPARE
SPARE				20	1	9		10						SPACE
						11		12						SPACE
SUB-TOTALS=	180	180	1875								200	100	100	= SUB-TOTALS

	V A	AMPS
TOTAL PHASE A=	380	1.73
TOTAL PHASE B=	280	1.27
TOTAL PHASE C=	1975	8.97
TOTAL CONNECTED LOAD	2.64	KVA
DEMAND FACTOR	100%	
DEMAND LOAD	2.64	KVA
20% FUTURE LOAD	0.527	KVA
TOTAL LOAD	3.167	KVA
TOTAL AMPERE	4.82	AMP

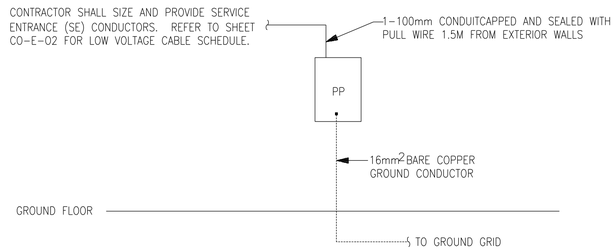

NOTES:

1. SEE SHEET CO-E-01 AND CO-E-02 FOR SYMBOLS, ABBREVIATIONS, GENERAL NOTES AND LIGHTING FIXTURE.
2. SEE SHEET CO-E-03 TO CO-E-05 FOR STANDARD DETAILS.
3. SEE SHEET CO-E-02 FOR BRANCH CIRCUIT SCHEDULE.
4. PROVIDE CONDUIT AND WIRING FOR FUTURE INSTALLATION OF SMOKE ALARMS.
5. PROVIDE 20A/2P/240V NON-FUSED DISCONNECT SWITCH IN NEMA-3R ENCLOSURE.

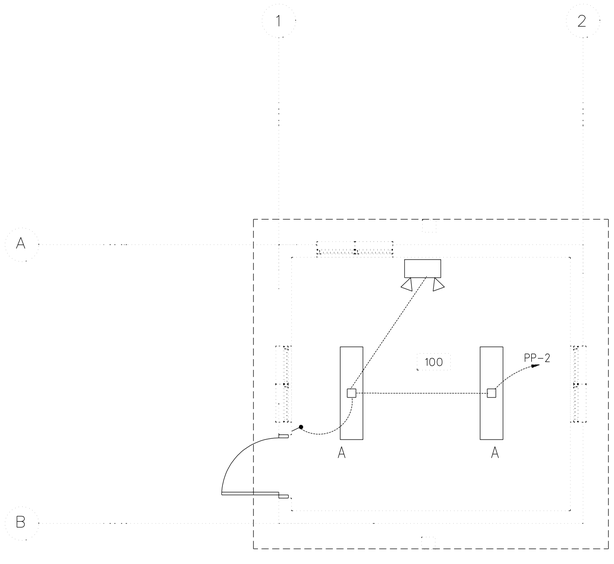

LIGHTING PLAN
SCALE= 1: 50

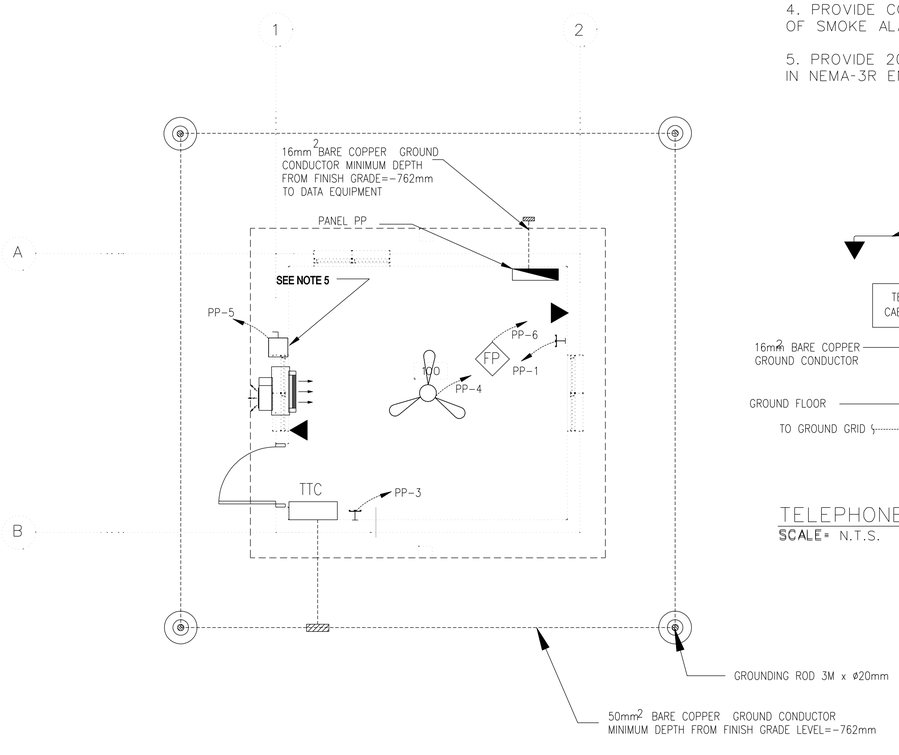

POWER, GROUNDING & COMMUNICATION PLAN
SCALE= 1: 50

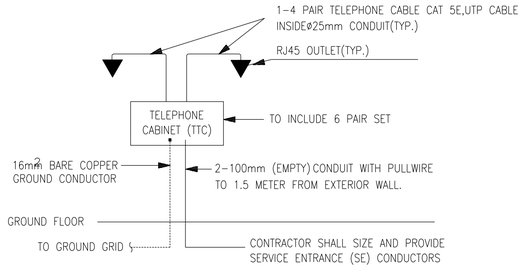

TELEPHONE RISER DIAGRAM
SCALE= N.T.S.

1 0 1 2 3 4
1:50

SYMBOL	DESCRIPTION	DATE	APR

DESIGNED BY: LB
DATE: 06-27-07
DWN BY: JMC
SUBMITTED BY: RAVI GREWAL CHIEF, PDT BLDG. SYSTEMS
CHK BY: RSG
FILE NO.: AF0707L-EL01PN

US Army Corps of Engineers Transatlantic Programs Center

ANA REGIONAL BRIGADE
PAKTIKA, AFGHANISTAN

GUARD HOUSE

ELECTRICAL SYSTEMS

SHEET REFERENCE NUMBER:
L
E-1

6/26/2007
h:\projects\afghanistan\af0707\af0707\lele\AF0707L-EL01PN.dwg

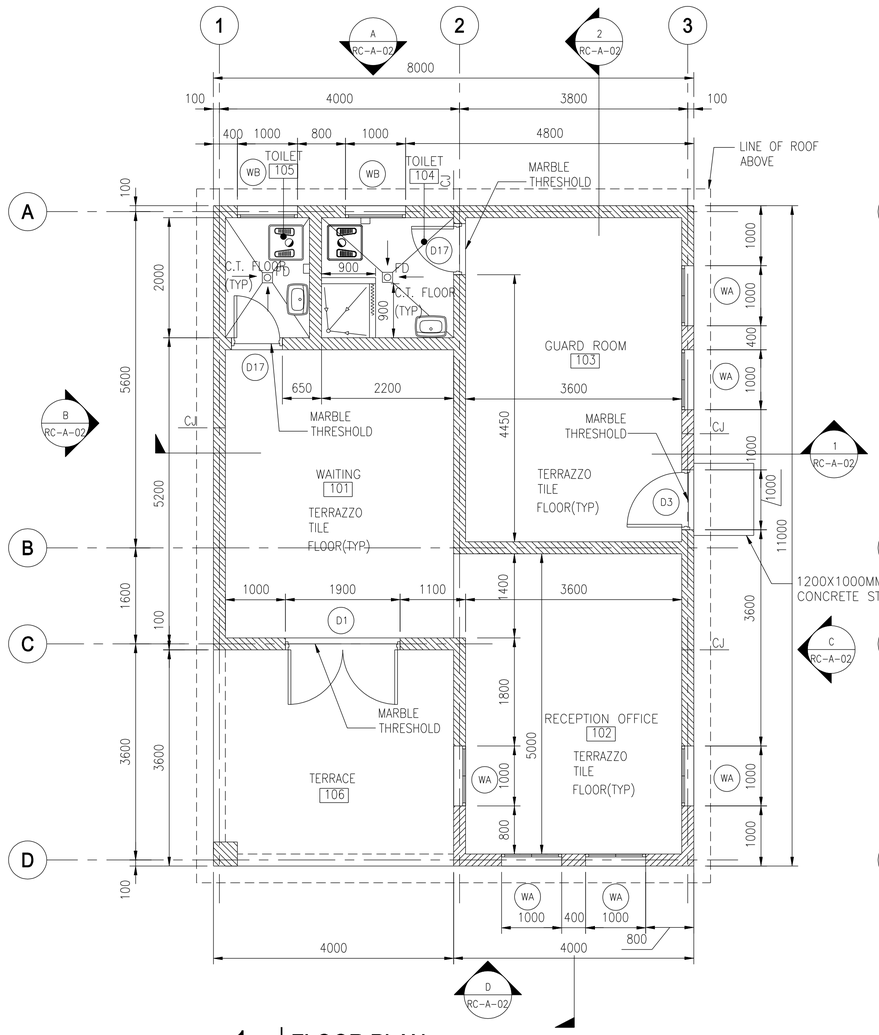

1 FLOOR PLAN

RC-A-01 SCALE: 1:50

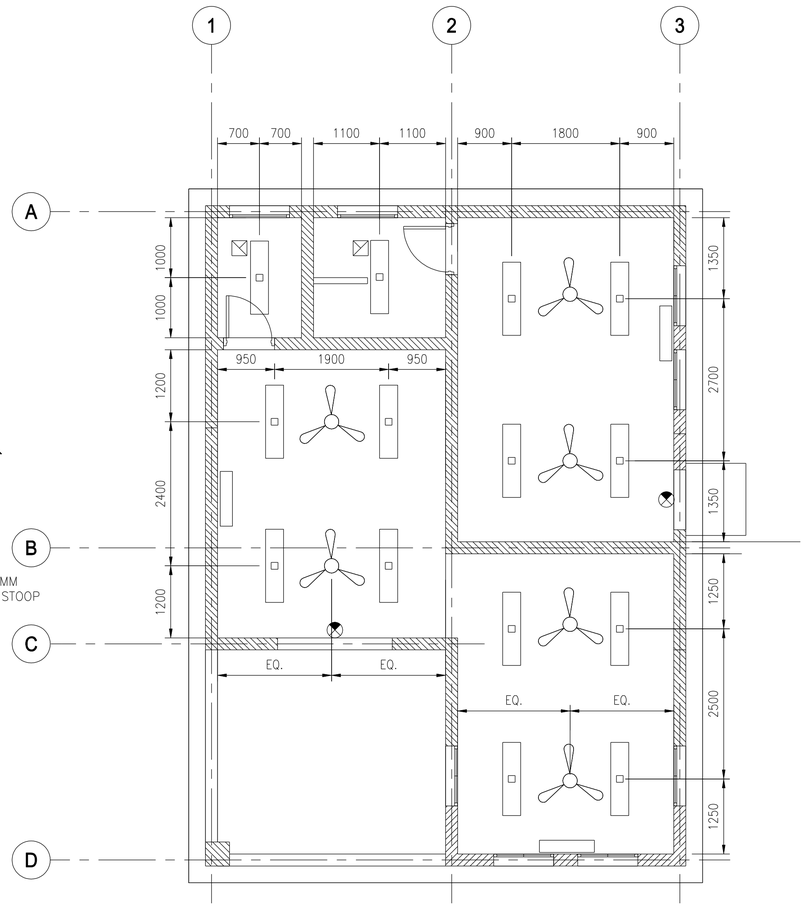

2 REFLECTED CEILING PLAN

RC-A-01 SCALE: 1:50

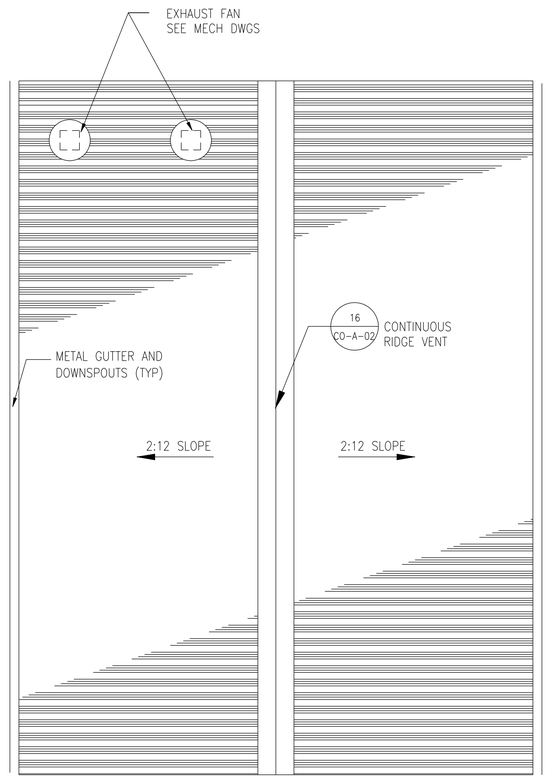

3 ROOF PLAN

RC-A-01 SCALE: 1:50

FINISHING SCHEDULE LEGEND

FLOOR

F1	SEALED CONCRETE
F2	300MMX300MM TERRAZZO TILE
F3	CERAMIC TILE

WALL

W1	WHITE PAINTED PLASTER
W2	150MMX150MM GLAZED CERAMIC TILES UP TO 2000MM AFF

CEILING

C1	20MM PAINTED PLASTER

WALL SYMBOLS

- CMU WALL
- CMU LOW HEIGHT WALL +/- 2000 MM WITH CERAMIC TILE FINISH

FINISHING SCHEDULE

Room No.	Usage	Floor	Wall	Ceiling
101	WAITING	F2	W1	C1
102	RECEPTION OFFICE	F2	W1	C1
103	GUARD ROOM	F2	W1	C1
104	TOILET	F3	W1/W2	C3
105	TOILET	F3	W1/W2	C3
106	TERRACE	F1	W1	C1

NOTES:

1- ALL WALLS ARE CMU UNLESS NOTED OTHERWISE .

2- ALL WALLS TERMINATE AT CEILING UNLESS NOTED OTHERWISE.

3- ALL DIMENSIONS ARE TO FACE OF CMU UNLESS NOTED OTHERWISE.

4- ALL VERTICAL DIMENSIONS & LEVELS ARE FROM GROUND FLOOR FINISHED SLAB. THIS ELEVATION IS +0000.

5- ALL WALLS REFERRING TO NOTE 5 AND PARTITIONS BETWEEN TOILET/SHOWERS STALLS SHALL BE 2000MM HEIGHT PARTIAL WALLS -TYP.

6- SEE DRAWING CO-A-05 & CO-A-06 FOR OPENING SCHEDULES & TYPES.

7- SEE DRAWING CO-A-02, CO-A-03 & CO-A-04 FOR STANDARD DETAILS.

8- SEE STRUCTURAL DRAWINGS FOR LOCATION OF BUILDING CONTROL AND SEISMIC JOINTS.

9- TOTAL AREA OF BUILDING 88 M2.

10-SEE SHEET CO-E-01 FOR LIGHTING LEGEND.

NOTE:
ORIENT BUILDING ON SITE SUCH THAT TOILETS ARE ON A NORTH/SOUTH ACCESS.

1 0 1 2 3 4
1:50 DRAWING NOT TO SCALE

SYMBOL	DESCRIPTION	DATE	APR

DESIGNED BY: YSK
DWN BY: JSG
CHK BY: PLD
DATE: 06-27-07
SUBMITTED BY: CHIEF, PORTFOLIO DEV & PROJECTS
FILE NO.: AF0707 M-RC-A-01

US Army Corps of Engineers Transatlantic Programs Center

ANA REGIONAL BRIGADE
PAKTIKA, AFGHANISTAN

RECEPTION BUILDING
FLOOR, REFLECTED CEILING & ROOF PLAN

SHEET REFERENCE NUMBER:
M
RC-A-01

$(getvar, "dwgprefix")$(getvar, "dwgname")$(edtime, 0, MON DD", YYYY - HH:MMam/pm)

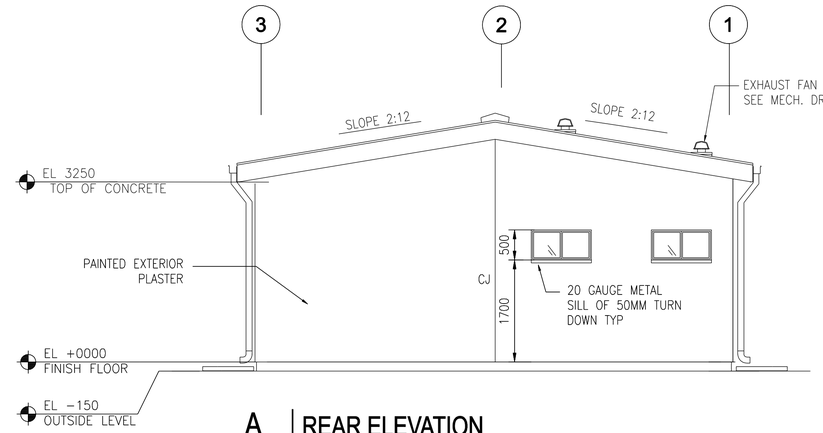

A REAR ELEVATION

RC-A-02 SCALE: 1:50

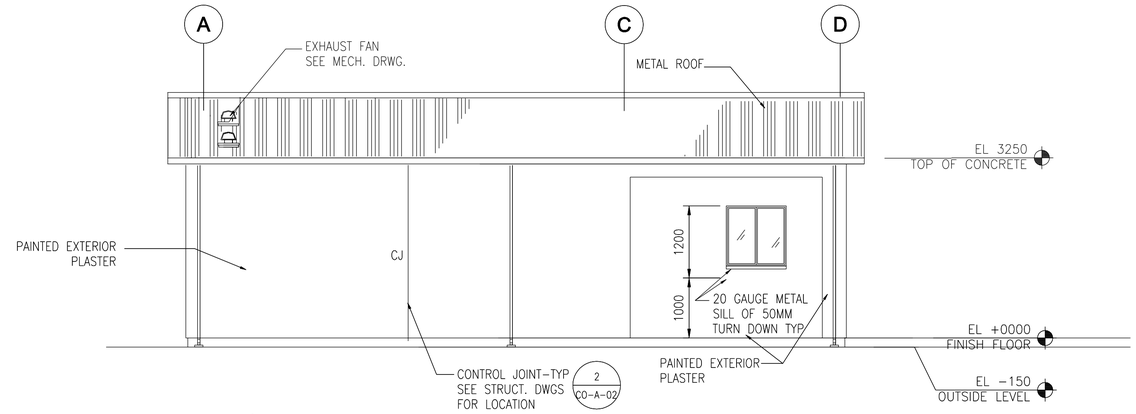

B SIDE ELEVATION

RC-A-02 SCALE: 1:50

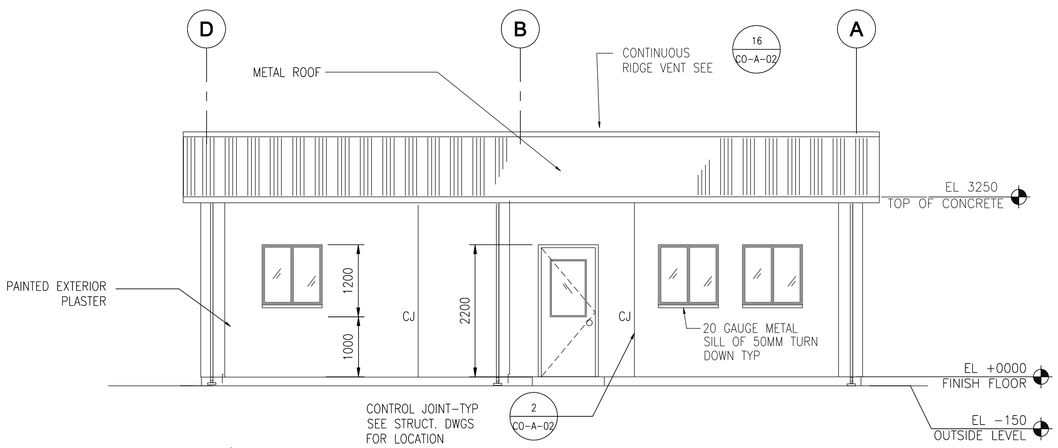

C SIDE ELEVATION

RC-A-02 SCALE: 1:50

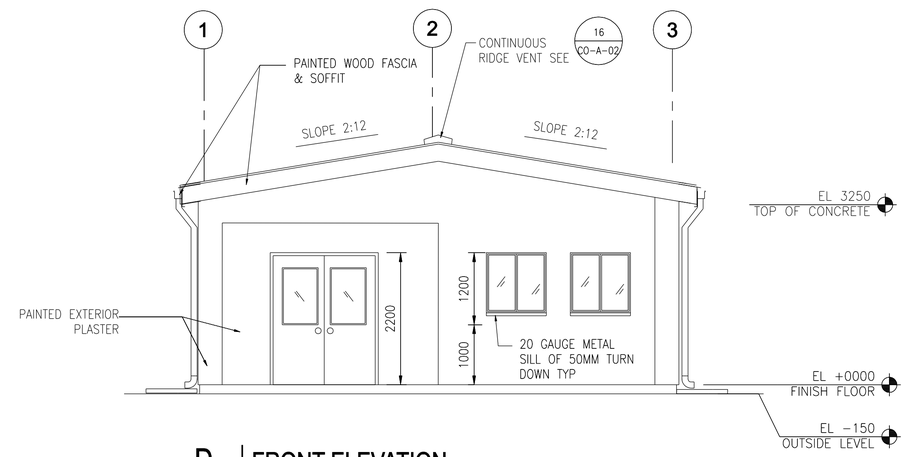

D FRONT ELEVATION

RC-A-02 SCALE: 1:50

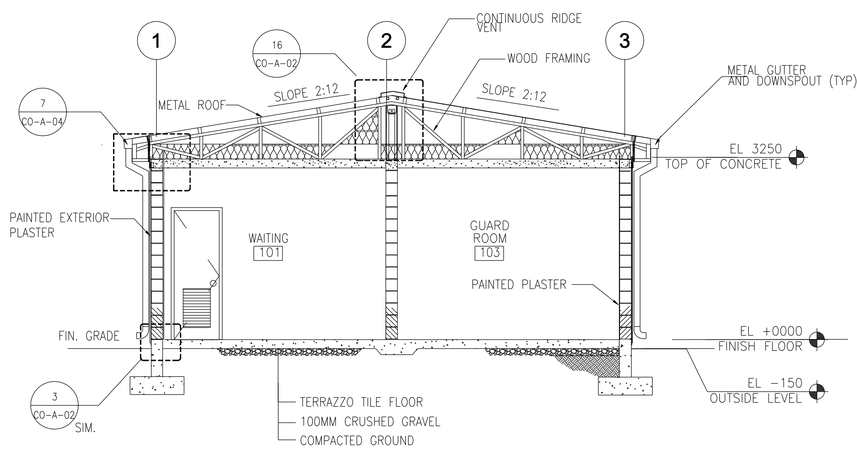

1 CROSS SECTION

RC-A-02 SCALE: 1:50

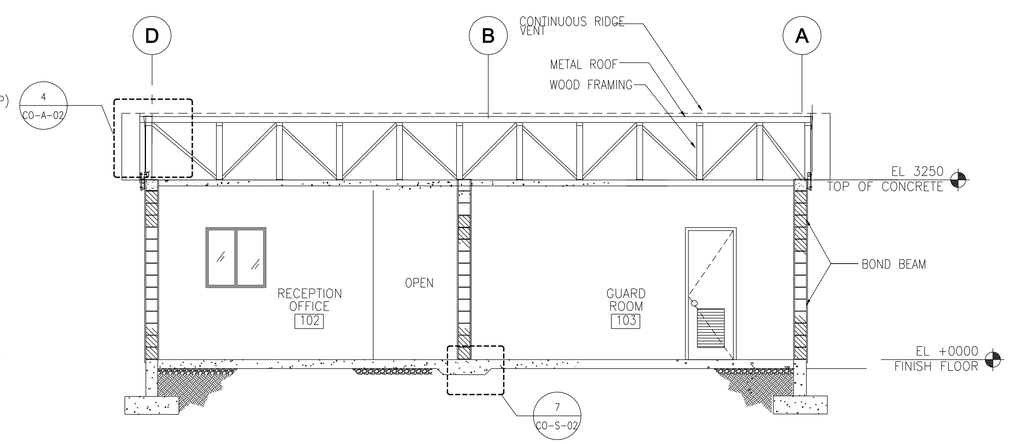

2 LONGITUDINAL SECTION

RC-A-02 SCALE: 1:50

1 0 1 2 3 4
1:50

DRAWING NOT TO SCALE

SYMBOL	DESCRIPTION	DATE	APR

DESIGNED BY: YSK
DWN BY: JSG
CHK BY: PLD
DATE: 06-27-07
SUBMITTED BY: CHIEF, PANELLO PROJECTS DEV
FILE NO.: AF0707 M-RC-A-02

US Army Corps of Engineers
Transatlantic Programs Center

ANA REGIONAL BRIGADE
PAKTIKA, AFGHANISTAN

RECEPTION BUILDING
EXTERIOR ELEVATIONS &
BUILDING SECTIONS

SHEET REFERENCE NUMBER:
M
RC-A-02

$(getvar, "dwgprefix")$(getvar, "dwgname")$(edtime, O, MON DD", " YYYY - HMMam/pm)

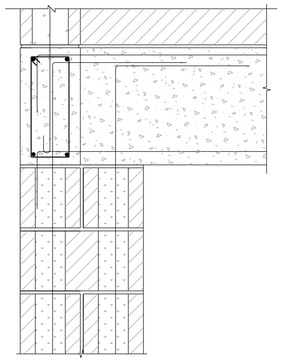

NOTE:

1. REINFORCEMENT FOR CMU COLUMN PER 4/RC-S-01. REINFORCEMENT FOR CONCRETE LINTEL PER 6/CO-S-01.
2. AT CORNER CONDITION, ADD A CONCRETE COLUMN CAP TO COMPLETE QUADRANT.

5 CMU COLUMN TO LINTEL DETAIL

RC-S-01 SCALE: 1:10

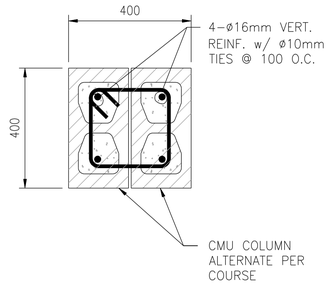

4 CMU COLUMN DETAIL

RC-S-01 SCALE: 1:10

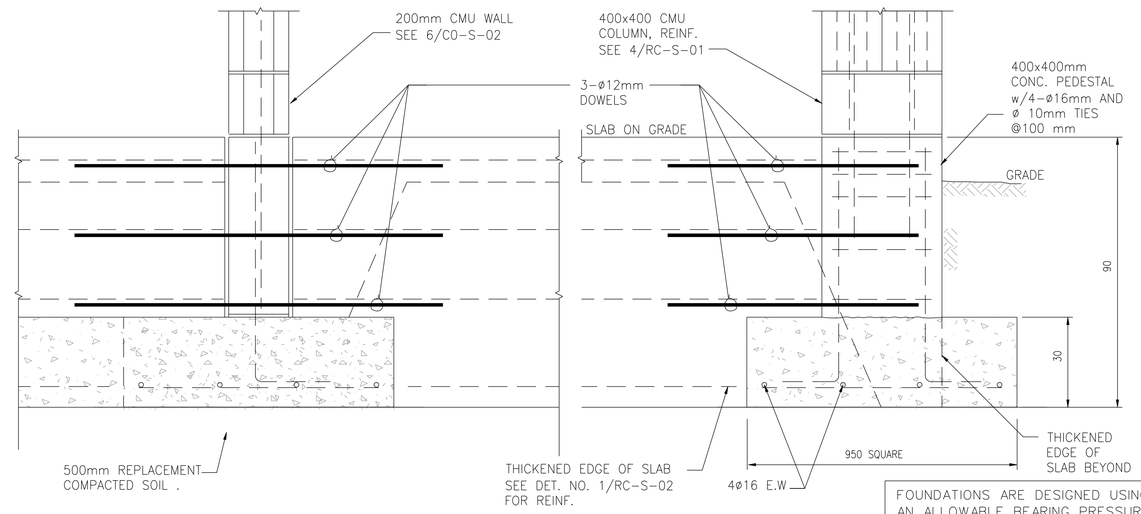

3 SECTION

RC-S-01 SCALE: 1:10

FOUNDATIONS ARE DESIGNED USING AN ALLOWABLE BEARING PRESSURE OF 0.75 KG/SQ. CM (1500 PSF), AND BOTTOM OF FOOTINGS ARE PLACED AS SHOWN ON DRAWINGS. GEOTECHNICAL INVESTIGATION SHALL CONFIRM BEARING CAPACITY TO BE NO LESS THAN 0.75 KG/SQ CM. IF GEOTECHNICAL INVESTIGATION SHOWS LESS THAN 0.75 KG/SQ CM THE CONTRACTOR SHALL REDESIGN FOOTINGS BASED ON THE GEOTECHNICAL INVESTIGATION. SEE SPECIFICAITON PARAGRAPH, GEOTECHNICAL, FOUNDATION AND SURVEY.

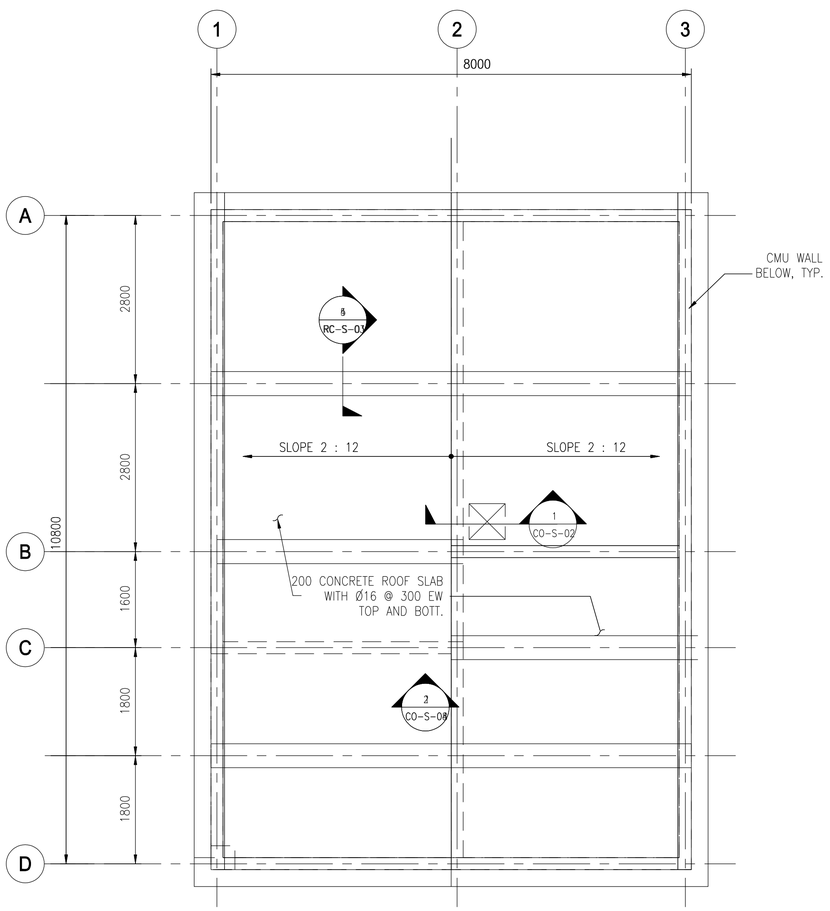

2 ROOF FRAMING PLAN

RC-S-01 SCALE: 1:50

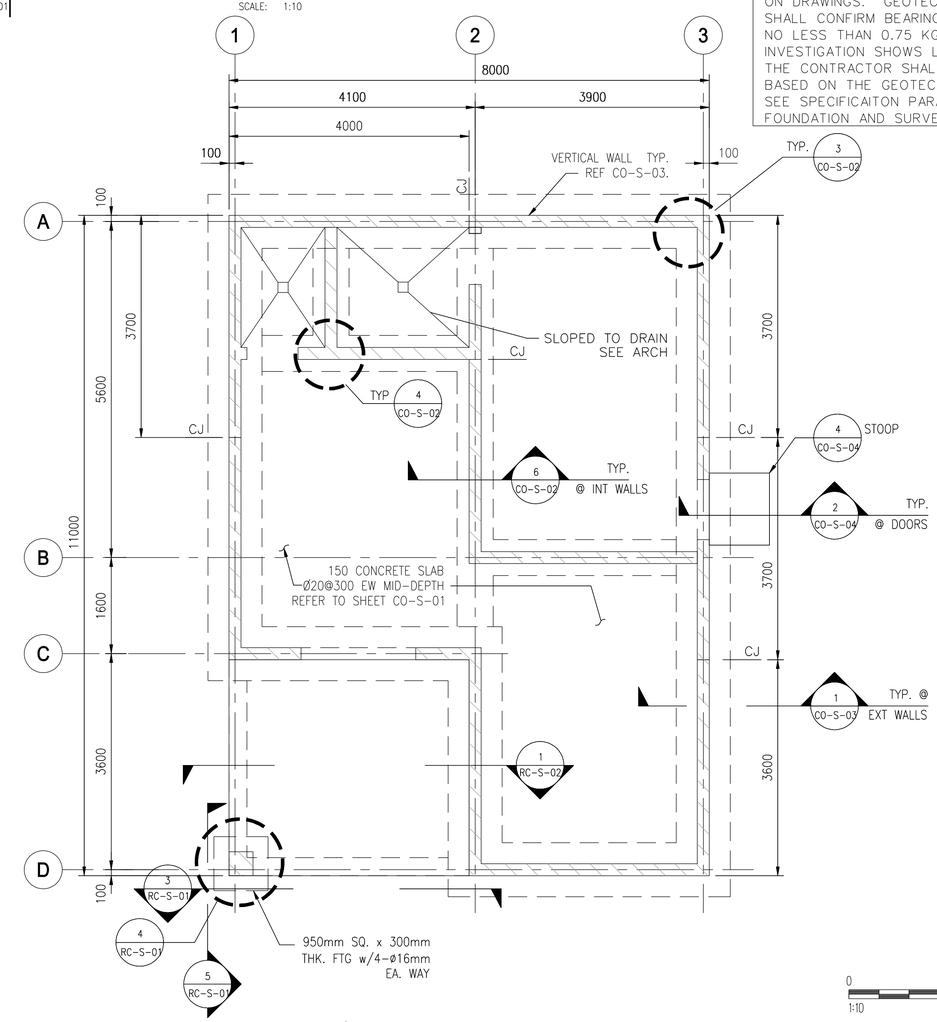

1 FOUNDATION PLAN

RC-S-01 SCALE: 1:50

NOTES:

1. FOR EXACT CMU WALL LOCATIONS REFER TO ARCHITECTURAL DWGS.
2. FOR LOCATION OF SLOPED AND DEPRESSED SLAB, SEE ARCHITECTURAL DWGS.
3. SEE ARCH FOR INTERIOR WALL HEIGHT.
4. SEE TYPICAL DETAILS FOR CONTROL JOINTS AT INTERIOR WALL INTERSECTIONS AND CORNERS.
5. FOR ALL INTERNAL WALLS – THICKENED SLAB WIDTH IS 1500 mm

0 .50 1.00
1:10

1 0 1 2 3 4
1:50

SYMBOL	DESCRIPTION	DATE	APR

DESIGNED BY: TCP
DWN BY: TCP
CHK BY: KGO
DATE: 06-27-07
SUBMITTED BY: DINELLO CHIEF, DIV PACETES DEV
FILE NO.: AF0707M-RC-S-01

US Army Corps of Engineers Transatlantic Programs Center

ANA REGIONAL BRIGADE
PAKTIKA, AFGHANISTAN

RECEPTION BUILDING
FOUNDATION/ROOF FRAMING PLANS, SECTIONS AND DETAILS

SHEET REFERENCE NUMBER:
M
RC-S-01

$(getvar, "dwgprefix")$(getvar, "dwgname")$(edtime, 0, MON DD"", YYYY - HH:MMam/pm)

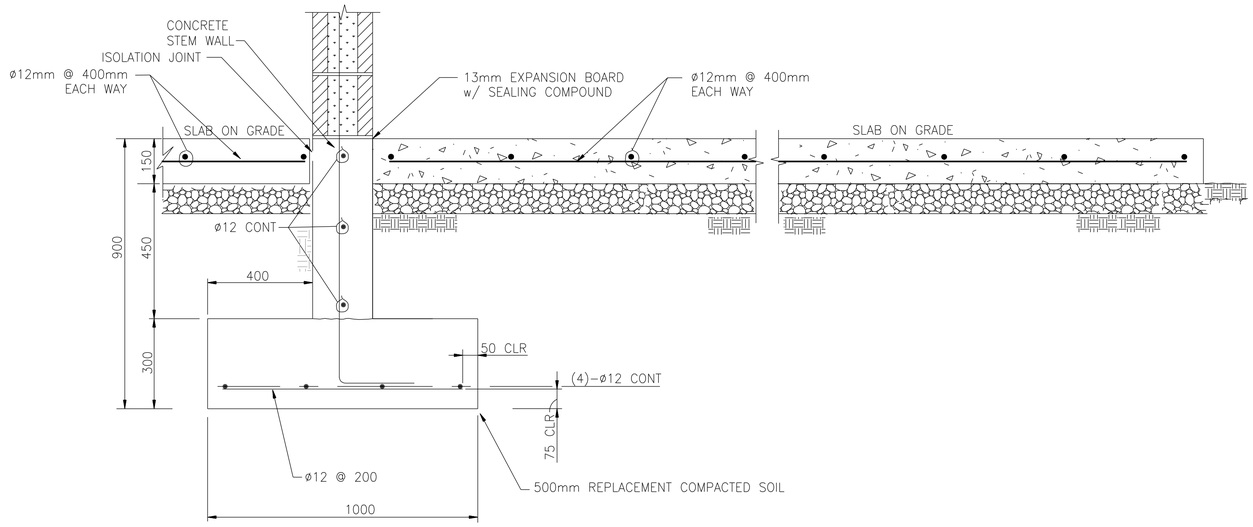

1 SECTION

RC-S-02 SCALE: 1:10

NOTES:

1. CONT UPPER BOND BEAM 200x200 W/ 2- ø14 CONT BARS TOP & BOTT.
2. FOR EXACT CMU WALL LOCATIONS REFER TO ARCHITECTURAL DWGS.
3. FOR LOCATION OF SLOPED AND DEPRESSED SLAB, SEE ARCHITECTURAL DWGS.
4. SEE ARCH FOR INTERIOR WALL HT
5. SEE TYPICAL DETAILS FOR CONTROL JOINTS AT INTERIOR WALL INTERSECTIONS AND CORNERS.

0 .50 1.00
1:10

SYMBOL	DESCRIPTION	DATE	APR

DESIGNED BY: TCP
DWN BY: TCP
CHK BY: KGO
DATE: 06-27-07
SUBMITTED BY: CHIEF, PANEL 10 CHIEF, PROJ MGMT DIV
FILE NO.: AF0707M-RC-S-02

US Army Corps of Engineers Transatlantic Programs Center

ANA REGIONAL BRIGADE
PAKTIKA, AFGHANISTAN

RECEPTION BUILDING
SECTIONS

SHEET REFERENCE NUMBER:
M
RC-S-02

$(getvar, "dwgprefix")$(getvar, "dwgname")$(edtime, 0, MON DD", YYYY - HH:MMam/pm)

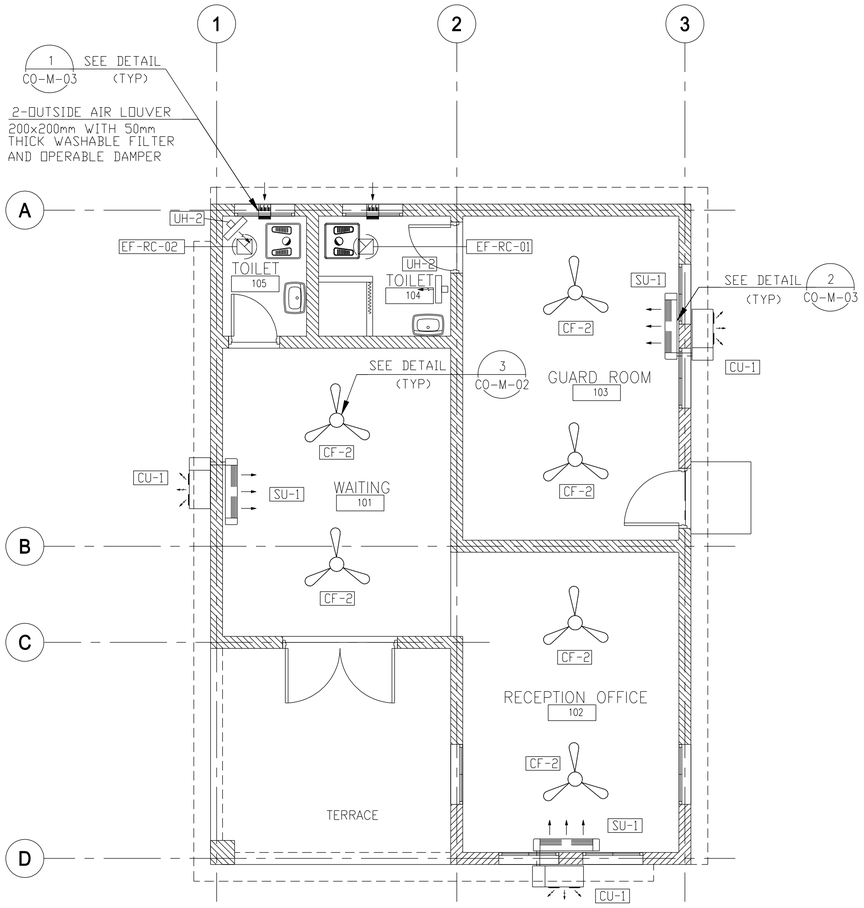

1 MECHANICAL FLOOR PLAN

CR-M-01 SCALE: 1:50

NOTES:

1. FOR STANDARD DETAILS SEE DWG. No. (CO-M-01, 02, 03 & 04).
2. FOR CONTROL DIAGRAMS SEE DWG. No. (CO-M-05).
3. FOR LEGEND AND ABBREVIATION SEE DWG. No. (CO-M-06).

EXHAUST FAN SCHEDULE (EF)

UNIT NUMBER	SERVICE	TYPE	AIR QUANTITY		MINIMUM WHEEL DIAMETER		FAN	STATIC PRESSURE		ELECTRICAL DATA				TEMP CONTROL DIAGRAM	INTERLOCK WITH	DRIVE TYPE	REMARKS
			CMH	CFM	MM	INCHES	RPM	mmH2O	IN W.G.	WATT	VOLTS	PHASE	HERTZ				
EF-RC-01	TOILET	R-CTFG-GP	170	100	-	-	900	6.35	0.25	130	380	3	50	E-4	SWITCH	DIRECT	NOTES 1, 2, 3
EF-RC-02	TOILET	R-CTFG-GP	135	80	-	-	950	6.35	0.25	80	380	3	50	E-4	SWITCH	DIRECT	NOTES 1, 2, 3

MANUFACTURER SHALL PROVIDE NECESSARY TRANSFORMERS ON ALL UNITS TO MEET ELECTRICAL REQUIREMENT.

NOTE 1. SUPPLIED WITH BACKDRAFT DAMPER

NOTE 2. ALL EXHAUST FANS WITH SINGLE PHASE POWER ARE TO BE PROVIDED w/ A FACTORY MOUNTED DISCONNECT SWITCH.

NOTE 3. TERMINATE WITH 150x150 GOOSENECK ABOVE ROOF.

FAN SCHEDULE TYPE - LEGEND
(REF. EXHAUST AND SUPPLY FAN SCHEDULES)

R-CTFG-GP

R =ROOF
W =WALL
IL =INLINE
CL =CEILING

GP = GENERAL PURPOSE
EP = EXPLOSION PROOF
DB = DOWN BLAST
UB = UP BLAST
UT = UTILITY SET

CTFG = CENTRIFUGAL
PROP = PROPELLER
TUBA = TUBE AXIAL

ELECTRIC HEATERS (EH)

UNIT NUMBER	HEATING CAPACITY TOTAL (KW)	HEATING CAPACITY TOTAL (BTUH)	ELECTRICAL DATA				REMARKS
			AMPS	VOLTS	PHASE	HERTZ	
EH-1,2	1	3,413	4.6	220	1	50	NOTE 1

1. MANUFACTURER SHALL PROVIDE BUILT-IN THERMOSTAT/ON-OFF SWITCH WITH OVERLOAD PROTECTION.

CEILING FAN SCHEDULE (CF)

UNIT NUMBER	TYPE (NOTE 1)	FAN DIAMETER	MAX WATTS	ELECTRICAL DATA			REMARKS
				VOLTS	PHASE	HERTZ	
CF-2	A	56 in	65	220	1	50	3-SPEED

NOTES:- 1- (A) WITHOUT LIGHT FIXTURE
2- BOTTOM OF FAN MOUNTING HEIGHT = MINIMUM 2500mm A.F.F
3- PROVIDE WITH REMOTE WALL MOUNTED, ON-OFF SWITCH LOCATED ON ELECTRICAL DRAWINGS.

SPLIT SYSTEM AIR CONDITIONING UNIT SCHEDULE (SU)

UNIT NUMBER	COOLING CAPACITY TOTAL	AIR QUANTITY		ELECTRICAL DATA			REMARKS
	(BTUH)	CMH	CFM	VOLTS	PHASE	HERTZ	
SU-1	12,000	425	250	220	1	50	HEAT PUMP

CONDENSING UNITS SCHEDULE (CU)

UNIT NUMBER	ELECTRICAL DATA				REMARKS
	KW	VOLTS	PHASE	HERTZ	
CU-1	1.5	220	1	50	--

1 0 1 2 3 4
1:50

SYMBOL	DESCRIPTION	DATE	APR

DESIGNED BY: F.MAKKOOH
DATE: 06-27-07
DWN BY: A.LATIF
SUBMITTED BY: R. CREWAL CHIEF, BLDG SYSTEMS
CHK BY: A.MAKKRAM
FILE NO.: AF0707 RC-M-01

US Army Corps of Engineers Transatlantic Programs Center

ANA REGIONAL BRIGADE
PAKTIKA, AFGHANISTAN

RECEPTION BUILDING
MECHANICAL FLOOR PLAN AND SCHEDULES

SHEET REFERENCE NUMBER:
M
RC-M-01
1 1

$(getvar, "dwgprefix")$(getvar, "dwgname")$(edtime, 0, MON DD",", YYYY - HH:MMam/pm)

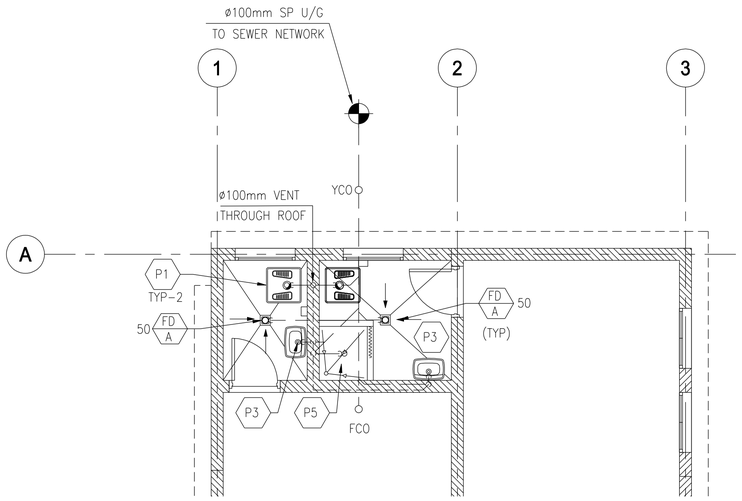

1 PLUMBING FLOOR PLAN - DRAINAGE

RC-P-01 SCALE: 1:50

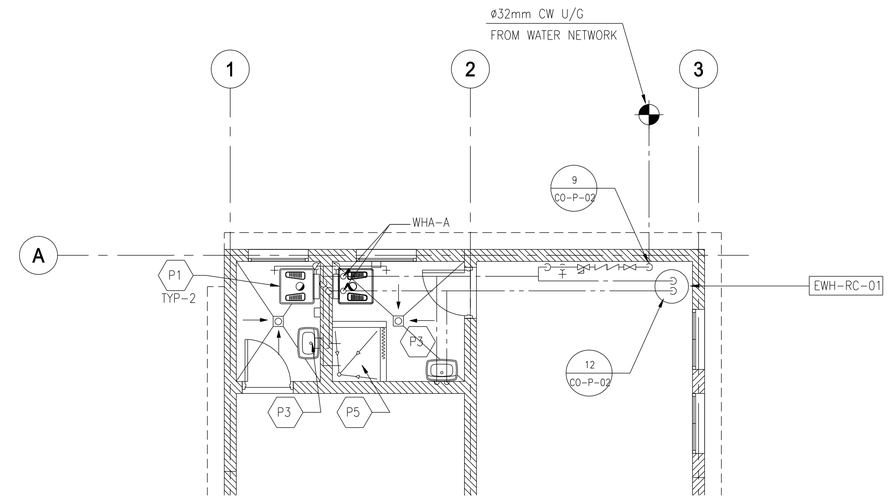

2 PLUMBING FLOOR PLAN - CW & HW

RC-P-01 SCALE: 1:50

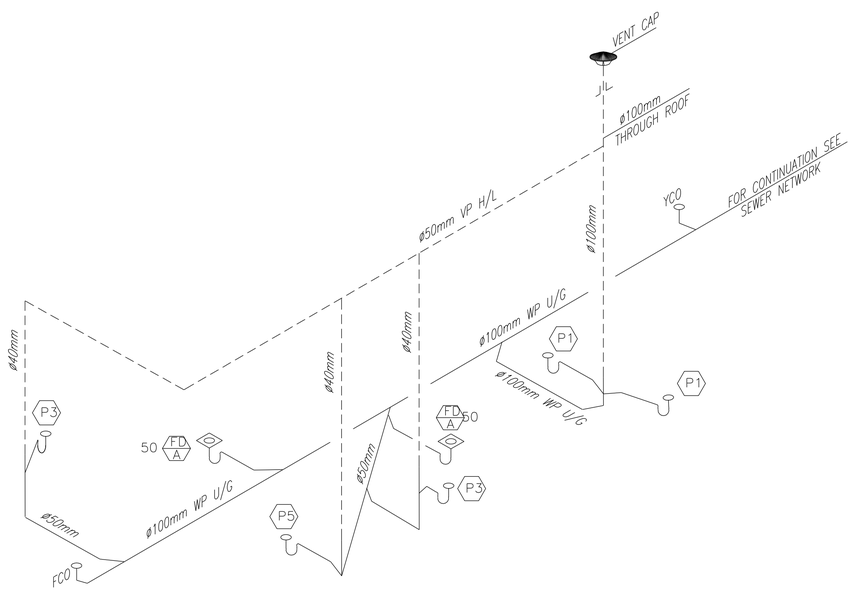

3 DRAINAGE RISER DIAGRAM

RC-P-01 SCALE: N.T.S

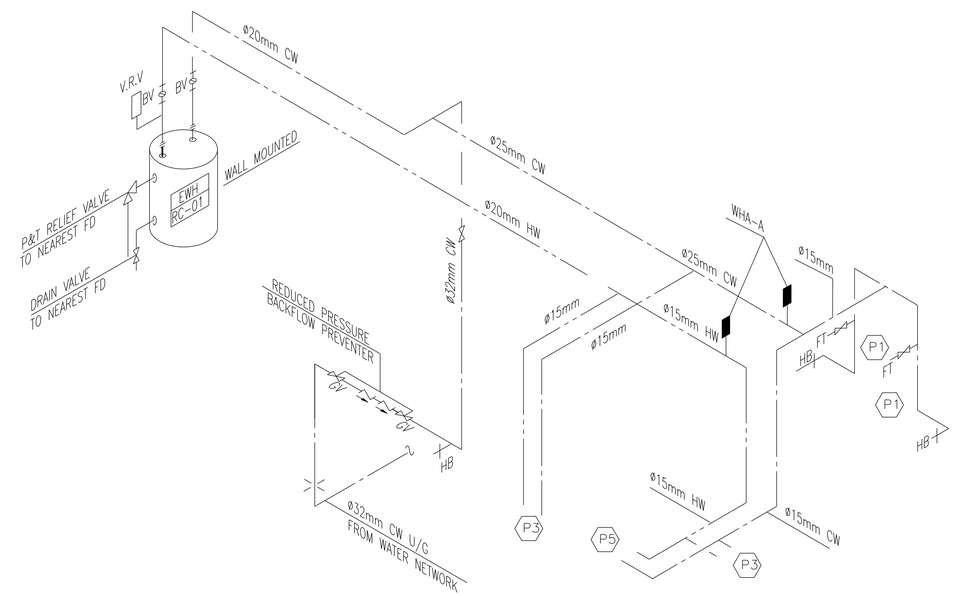

4 CW & HW RISER DIAGRAM

RC-P-01 SCALE: N.T.S

NOTE:

1. FOR PLUMBING LEGEND, ABBREVIATIONS, NOTES, SCHEDULES, AND STANDARD DETAILS SEE SHEETS CO-P-01 THRU CO-P-07.

1 0 1 2 3 4
1:50

SYMBOL	DESCRIPTION	DATE	APR

DESIGNED BY: XXX
DATE: 06-27-07
DWN BY: XXX
SUBMITTED BY: R. GREWAL
CHK BY: XXX
CHIEF, FDT BLDG SYSTEMS
FILE NO.: AF0707M-RC-P-01

US Army Corps of Engineers
Transatlantic Programs Center

ANA REGIONAL BRIGADE
PAKTIKA, AFGHANISTAN

RECEPTION BUILDING
PLUMBING FLOOR PLANS
AND RISER DIAGRAMS

SHEET REFERENCE NUMBER:
M
RC-P-01

$(getvar, "dwgprefix")$(getvar, "dwgname")$(edtime, 0, MON DD", " YYYY - H:MMam/pm)

RECEPTION CENTER
PANEL PP

AIC: 25KA

63AT/100AF MCB
MLO

VOLTAGE 380/220V, 3PH, 5W, 50HZ

FEED TOP

MOUNTING FLUSH

LOCATION ROOM 101

DESCRIPTION	LOAD (VA) A	LOAD (VA) B	LOAD (VA) C	AMP	POLE	CKT	A B C	CKT	POLE	AMP	LOAD (VA) A	LOAD (VA) B	LOAD (VA) C	DESCRIPTION
LIGHTING RM#101,102,103	1440			20	1	1		2	1	20	1012			EH-2 RM# 104
CF-2 FANS		600		20	1	3		4	1	20		400		FOR FUTURE SELF DETECTORS
EH-1 RM# 103			506	20	1	5		6	1	20			1200	RECEPTACLES RM#101,102,103
CU-1/SU-1 RM# 101	1375			20	1	7		8			2000			
CU-2/SU-2 RM# 102		1175		20	1	9		10	3	20		2000		EWH-RC-01
CU-2/SU-2 RM# 103			1175	20	1	11		12					2000	
	50					13		14	1	20	180			TTC RECP
EF-RC-01		50		20	3	15		16	1	20		180		TTC RECP
			50			17		18	1	20				SPARE
	30					19		20	1	20				SPARE
EF-RC-02		30		20	3	21		22	1	20				SPACE
			30			23		24						SPACE
SPARE				20	1	25		26						SPACE
SPARE				20	1	27		28						SPACE
SPARE				20	1	29		30						SPACE
SUB-TOTALS=	2895	1855	1761								3192	2580	3200	= SUB-TOTALS

	V A	AMPS
TOTAL PHASE A=	6087	27.67
TOTAL PHASE B=	4435	20.16
TOTAL PHASE C=	4961	22.55
TOTAL CONNECTED LOAD	15.48	KVA
DEMANDED FACTOR	1.00	
DEMANDED LOAD	15.48	KVA
20% FUTURE LOAD	3.10	KVA
TOTAL LOAD	18.58	KVA
TOTAL AMPERE	28.26	AMP

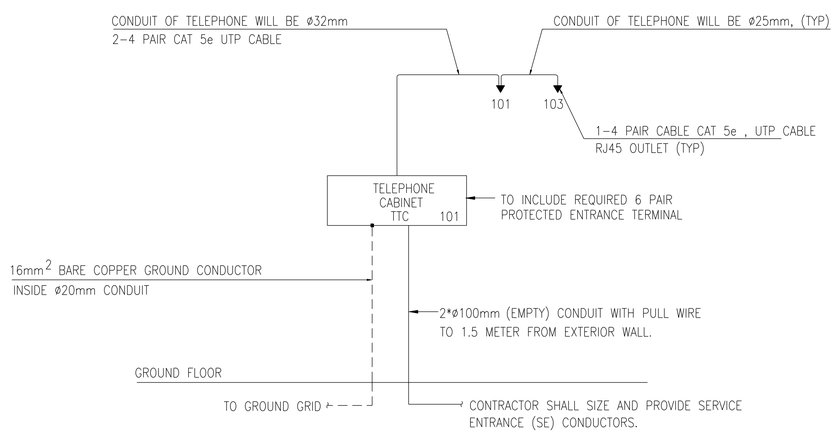

1 TELEPHONE RISER DIAGRAM
RC-E-01 SCALE: N.T.S.

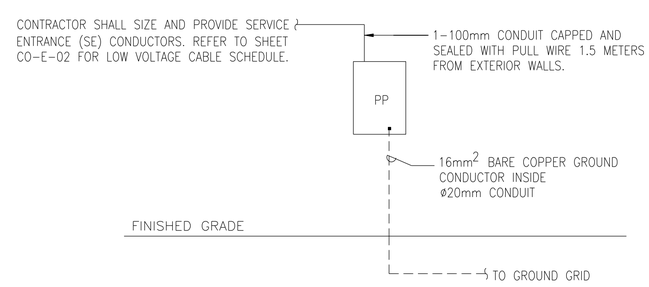

2 POWER RISER DIAGRAM
RC-E-01 SCALE: N.T.S.

SYMBOL	DESCRIPTION	DATE	APR

DESIGNED BY: XXX
DATE: 06-27-07
DWN BY: XXX
SUBMITTED BY: R. GREWAL CHIEF, PDT BLDG SYSTEMS
CHK BY: XXX
FILE NO.: AF0707 M-RC-E-01

US Army Corps of Engineers Transatlantic Programs Center

ANA REGIONAL BRIGADE
PAKTIKA, AFGHANISTAN

RECEPTION BUILDING
PANEL SCHEDULE AND RISER DIAGRAMS

SHEET REFERENCE NUMBER:
M
RC-E-01

(setvar, "dwgprefix"$(getvar, "dwgname")$(edtime, 0, MON DD", YYYY - H:MMam/pm))

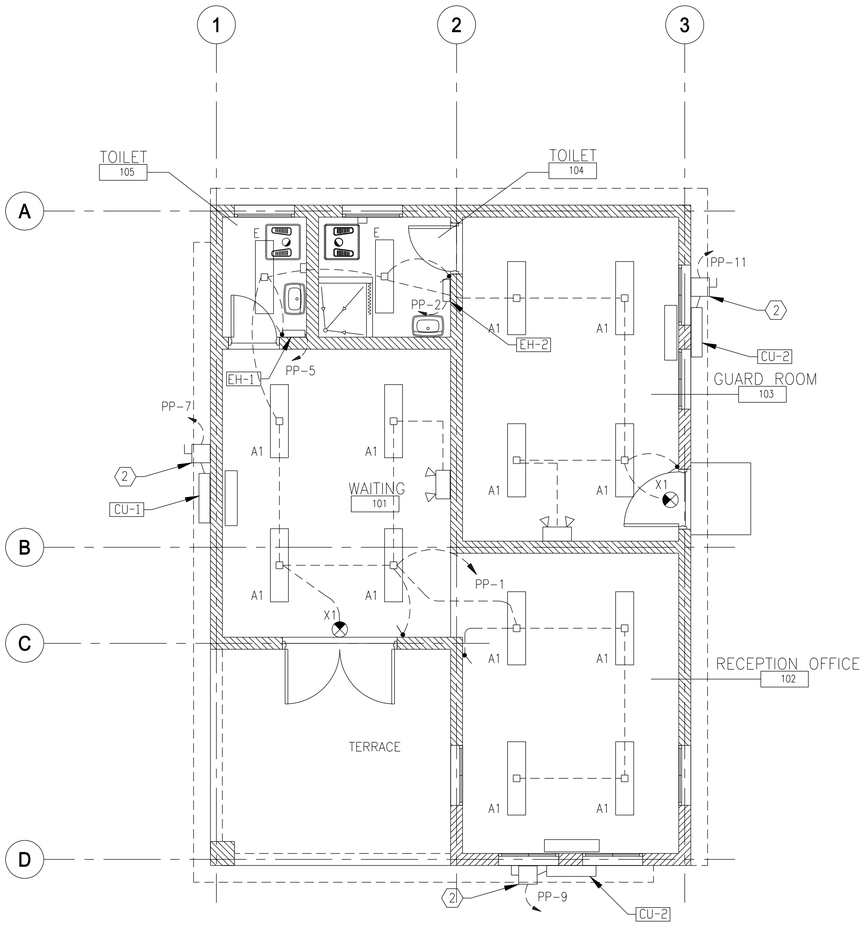

1 LIGHTING PLAN

RC-E-02 SCALE: 1:50

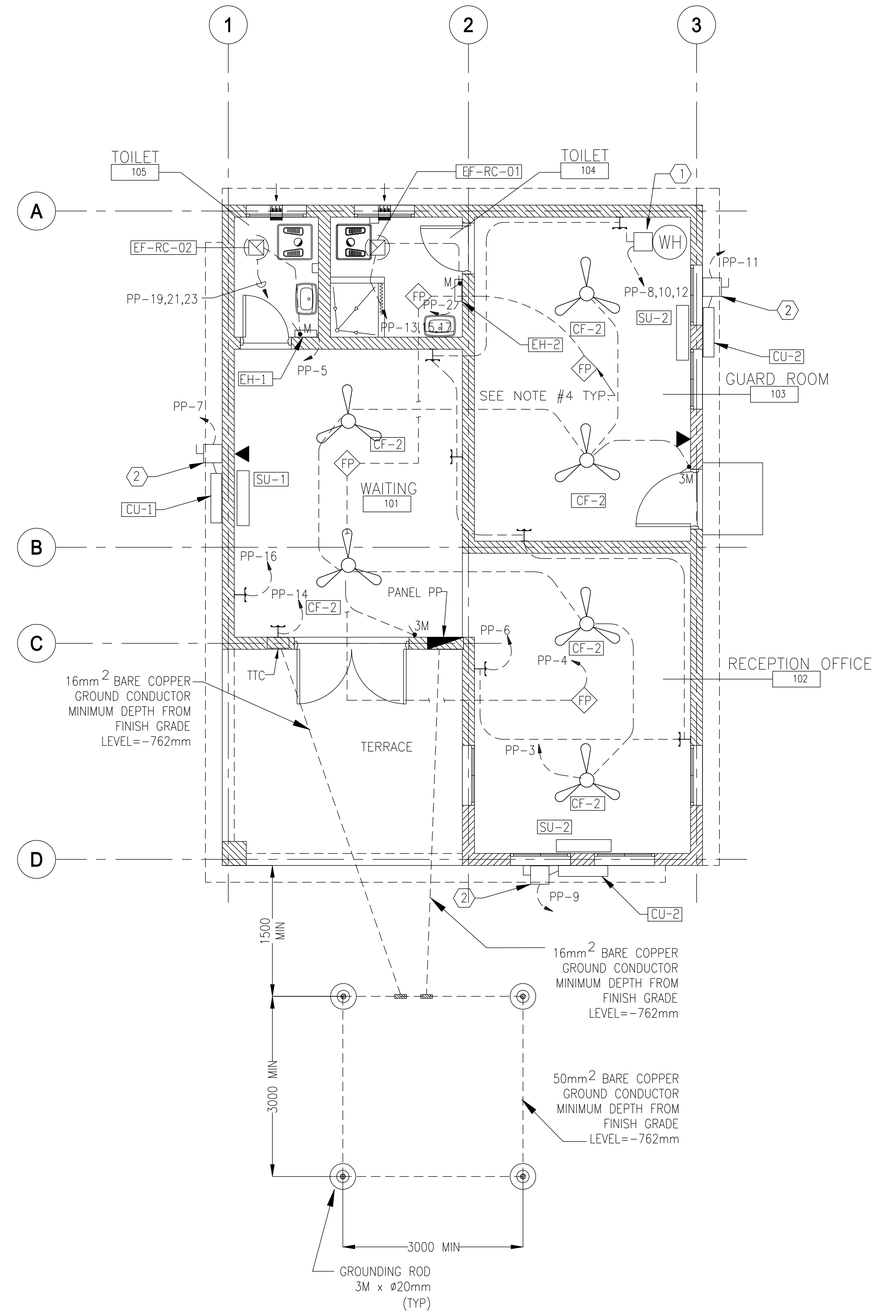

2 POWER, COMMUNICATION AND GROUNDING PLAN

RC-E-02 SCALE: 1:50

KEY NOTES:

1. PROVIDE 380V, 32A, 3P, IN A NEMA 1 ENCLOSURE.
2. PROVIDE 20A, 240V, 2P, NON-FUSED DISCONNECT SWITCH IN NEMA 3R ENCLOSURE.

NOTES:

1. SEE SHEETS CO-E-01 AND CO-E-02 FOR SYMBOLS, ABBREVIATIONS, GENERAL NOTES AND LIGHTING FIXTURE SCHEDULE.
2. SEE SHEETS CO-E-03 TO CO-E-05 FOR STANDARD DETAILS
3. SEE SHEET RC-E-01 FOR PANEL SCHEDULE AND RISER DIAGRAMS FOR POWER AND TELEPHONE SYSTEM.
4. PROVIDE FIRE ALARM PULL BOXES , FOR FUTURE SELF SMOKE DETECTORS CONDUITS AND WIRING FOR FUTURE INSTALLATION OF SMOKE ALARMS.

1:50 DRAWING NOT TO SCALE

SYMBOL	DESCRIPTION	DATE	APR

DESIGNED BY: XXX
DATE: 06-27-07
DWN BY: XXX
SUBMITTED BY: R. CREWAL CHIEF, PDT BLDG SYSTEMS
CHK BY: XXX
FILE NO.: AF0707 M-RC-E-02

US Army Corps of Engineers Transatlantic Programs Center

ANA REGIONAL BRIGADE
PAKTIKA, AFGHANISTAN

RECEPTION BUILDING

LIGHTING, POWER, COMMUNICATION AND GROUNDING PLAN

SHEET REFERENCE NUMBER:
M
RC-E-02

$(getvar, "dwgprefix")$(getvar, "dwgname")$(edtime, O, MON DD", " YYYY - HHMMam/pm)

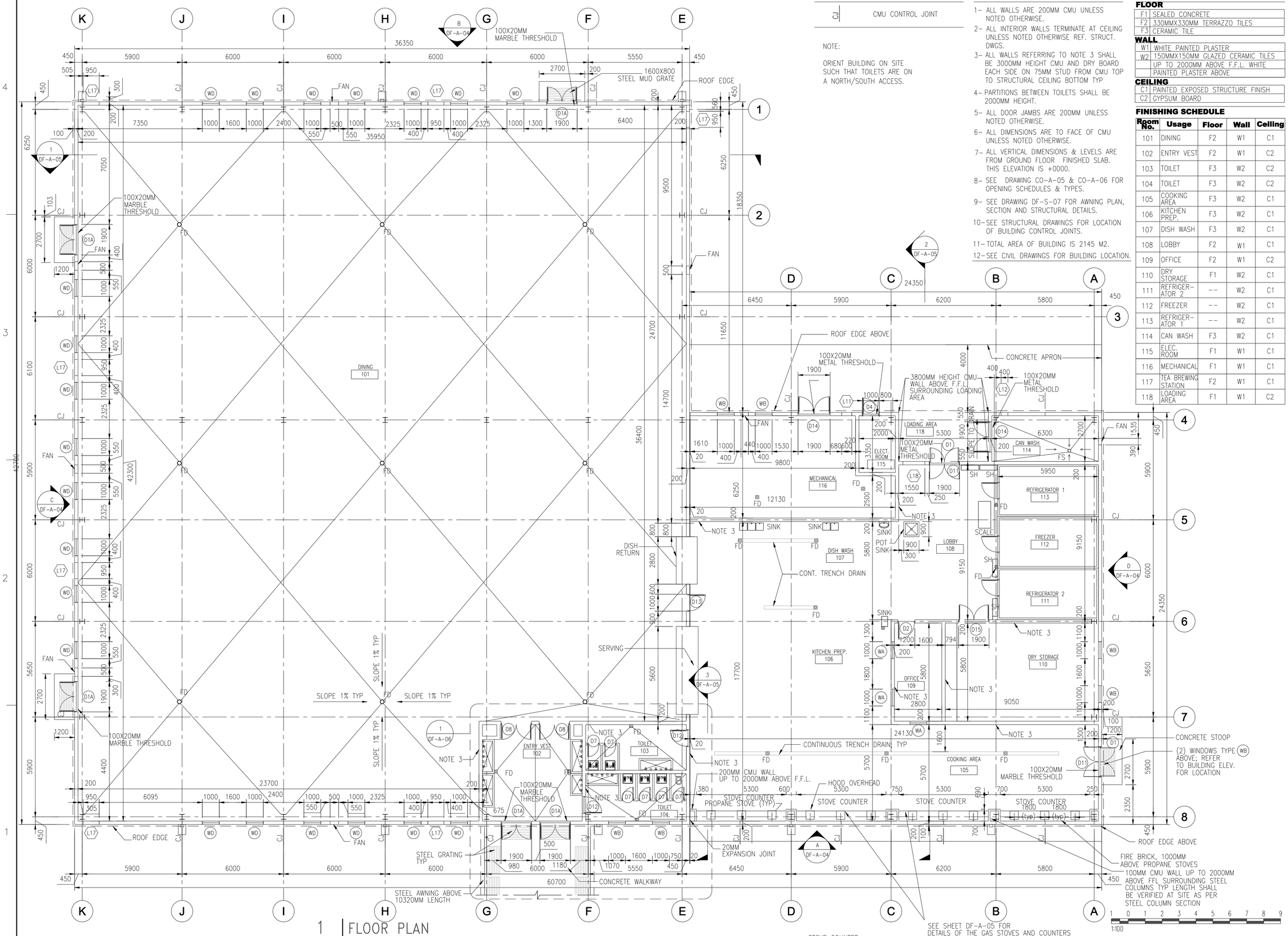

1 FLOOR PLAN

DF-A-01 SCALE: 1:100

WALL SYMBOL:

CJ	CMU CONTROL JOINT

NOTE:

ORIENT BUILDING ON SITE SUCH THAT TOILETS ARE ON A NORTH/SOUTH ACCESS.

NOTES:

1- ALL WALLS ARE 200MM CMU UNLESS NOTED OTHERWISE.
2- ALL INTERIOR WALLS TERMINATE AT CEILING UNLESS NOTED OTHERWISE REF. STRUCT. DWGS.
3- ALL WALLS REFERRING TO NOTE 3 SHALL BE 3000MM HEIGHT CMU AND DRY BOARD EACH SIDE ON 75MM STUD FROM CMU TOP TO STRUCTURAL CEILING BOTTOM TYP
4- PARTITIONS BETWEEN TOILETS SHALL BE 2000MM HEIGHT.
5- ALL DOOR JAMBS ARE 200MM UNLESS NOTED OTHERWISE.
6- ALL DIMENSIONS ARE TO FACE OF CMU UNLESS NOTED OTHERWISE.
7- ALL VERTICAL DIMENSIONS & LEVELS ARE FROM GROUND FLOOR FINISHED SLAB. THIS ELEVATION IS +0000.
8- SEE DRAWING CO-A-05 & CO-A-06 FOR OPENING SCHEDULES & TYPES.
9- SEE DRAWING DF-S-07 FOR AWNING PLAN, SECTION AND STRUCTURAL DETAILS.
10- SEE STRUCTURAL DRAWINGS FOR LOCATION OF BUILDING CONTROL JOINTS.
11- TOTAL AREA OF BUILDING IS 2145 M2.
12- SEE CIVIL DRAWINGS FOR BUILDING LOCATION.

FINISHING SCHEDULE LEGEND

FLOOR

F1	SEALED CONCRETE
F2	330MMX330MM TERRAZZO TILES
F3	CERAMIC TILE

WALL

W1	WHITE PAINTED PLASTER
W2	150MMX150MM GLAZED CERAMIC TILES UP TO 2000MM ABOVE F.F.L. WHITE PAINTED PLASTER ABOVE

CEILING

C1	PAINTED EXPOSED STRUCTURE FINISH
C2	GYPSUM BOARD

FINISHING SCHEDULE

Room No.	Usage	Floor	Wall	Ceiling
101	DINING	F2	W1	C1
102	ENTRY VEST	F2	W1	C2
103	TOILET	F3	W2	C2
104	TOILET	F3	W2	C2
105	COOKING AREA	F3	W2	C1
106	KITCHEN PREP.	F3	W2	C1
107	DISH WASH	F3	W2	C1
108	LOBBY	F2	W1	C1
109	OFFICE	F2	W1	C2
110	DRY STORAGE	F1	W2	C1
111	REFRIGERATOR 2	--	W2	C1
112	FREEZER	--	W2	C1
113	REFRIGERATOR 1	--	W2	C1
114	CAN WASH	F3	W2	C1
115	ELEC. ROOM	F1	W1	C1
116	MECHANICAL	F1	W1	C1
117	TEA BREWING STATION	F2	W1	C1
118	LOADING AREA	F1	W1	C2

SYMBOL	DESCRIPTION	DATE	APR

DESIGNED BY: YSK
DWN BY: JSG
CHK BY: PLD
DATE: 06-27-07
SUBMITTED BY: CHIEF, PROJECT DEVELOPMENT BRANCH
FILE NO.: AF0707N-DF-A-01

US Army Corps of Engineers Transatlantic Programs Center

ANA REGIONAL BRIGADE
PAKTIKA, AFGHANISTAN

DF AC
FLOOR PLAN

SHEET REFERENCE NUMBER:
N
DF-A-01

$(getvar, "dwgprefix")$(getvar, "dwgname")$(edtime, O, MON DD",." YYYY - H:MMam/pm)

NOTES:

1-SEE SHEET DF-A-01 FOR FINISH SCHEDULE.

2-SEE SHEET CO-E-01 FOR FOR LIGHTING LEGEND.

3-SEE SHEET DF-E-02 FOR EXIT SIGN LOCATIONS.

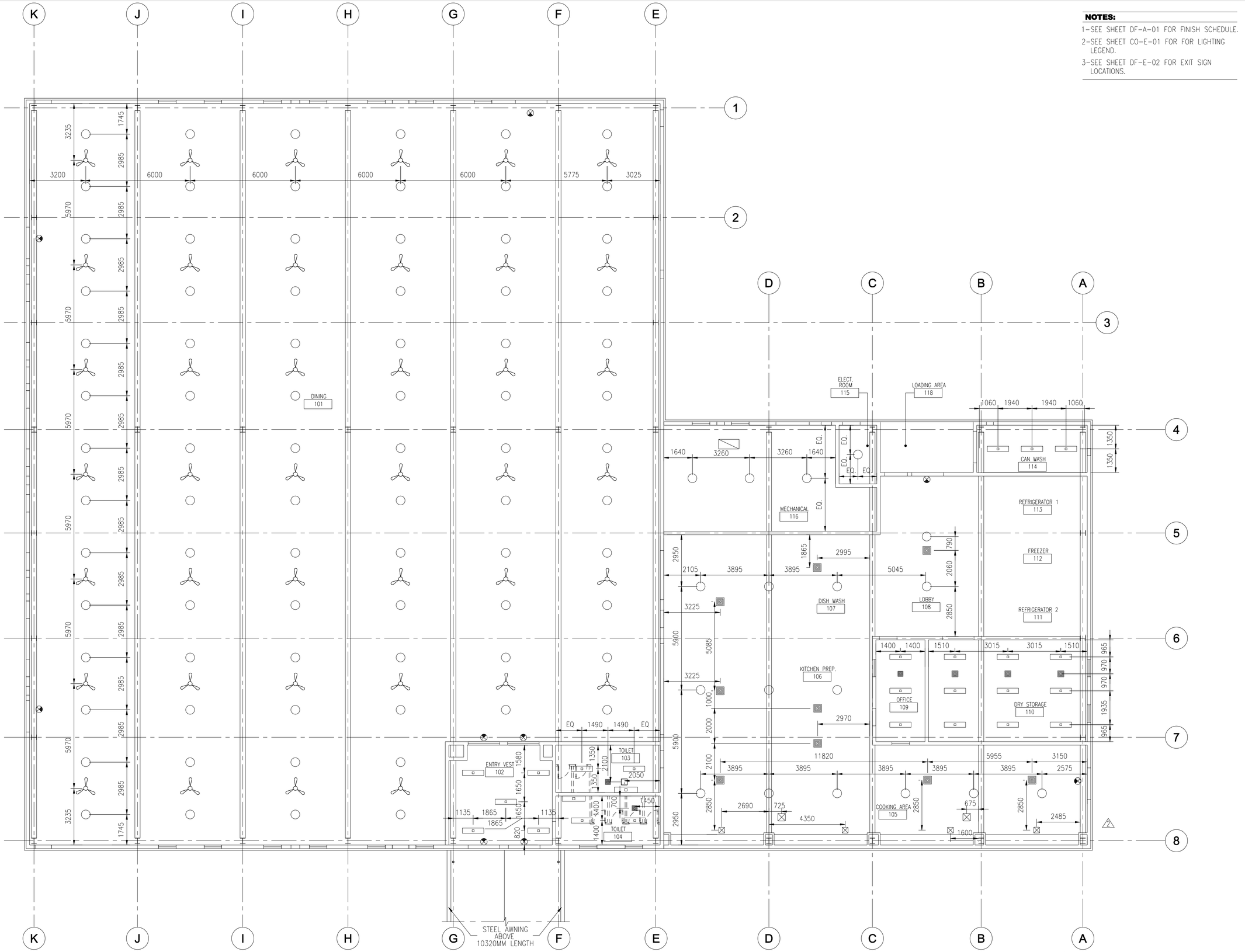

1 REFLECTED CEILING PLAN

DF-A-02

SCALE: 1:100

SYMBOL	DESCRIPTION	DATE	APR

DESIGNED BY: YSK
DATE: 06-27-07
DWN BY: JSG
SUBMITTED BY: PHILIP J. PANELLO
CHIEF, PROJECTS DEV
CHK BY: PLD
FILE NO.: AF0707N-DF-A-02

US Army Corps of Engineers Transatlantic Programs Center

ANA REGIONAL BRIGADE
PAKTIKA, AFGHANISTAN

DFAC

REFLECTED CEILING PLAN

SHEET REFERENCE NUMBER:
N
DF-A-02

$(getvar, "dwgprefix")$(getvar, "dwgname")$(edtime, 0, MON DD"," YYYY - HHMMam/pm)

NOTE:

1- FOR HVAC OPENINGS LOCATION AND DIMENSION REFER TO DF-M-02.

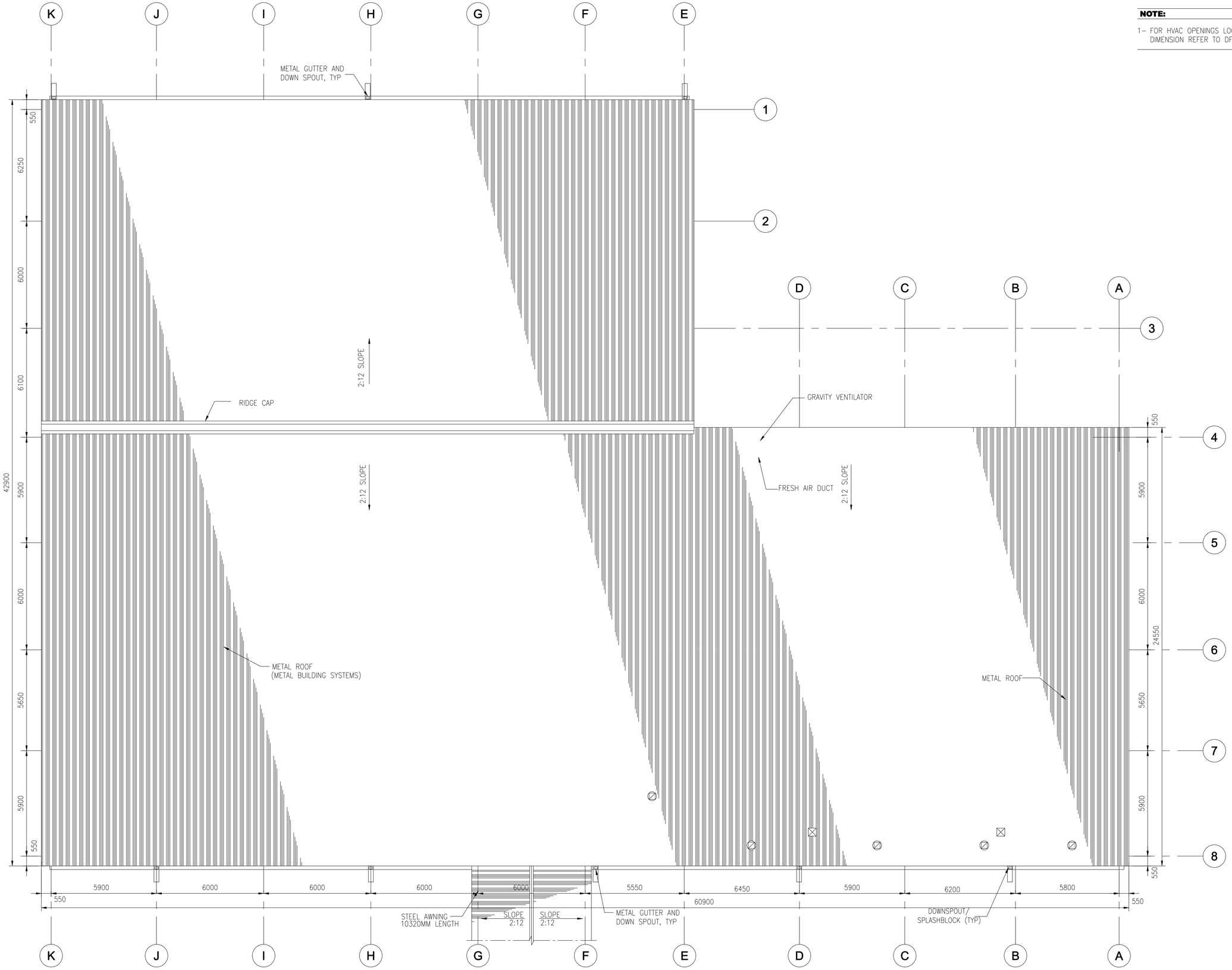

1 ROOF PLAN

DF-A-03 SCALE: 1:100

SYMBOL	DESCRIPTION	DATE	APR

DESIGNED BY: YSK
DATE: 06-27-07
DWN BY: JSG
SUBMITTED BY: PHILIP J. PANELLO CHIEF, FACILITIES DEV
CHK BY: PLD
FILE NO.: AF0707N-DF-A-03

US Army Corps of Engineers Transatlantic Programs Center

ANA REGIONAL BRIGADE
PAKTIKA, AFGHANISTAN

DF AC
ROOF PLAN

SHEET REFERENCE NUMBER:
N
DF-A-03

$(getvar, "dwgprefix")$(getvar, "dwgname")$(edtime, 0, MON DD"," YYYY - H:MMam/pm)

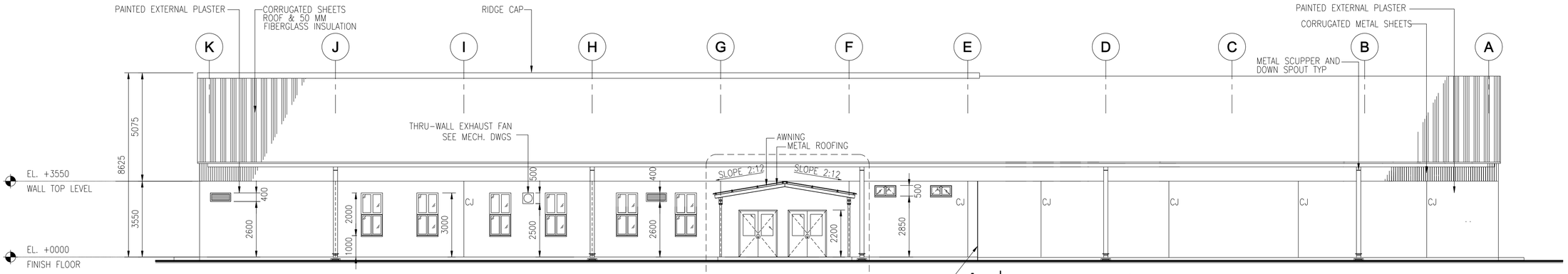

A FRONT ELEVATION

DF-A-04 SCALE: 1:100

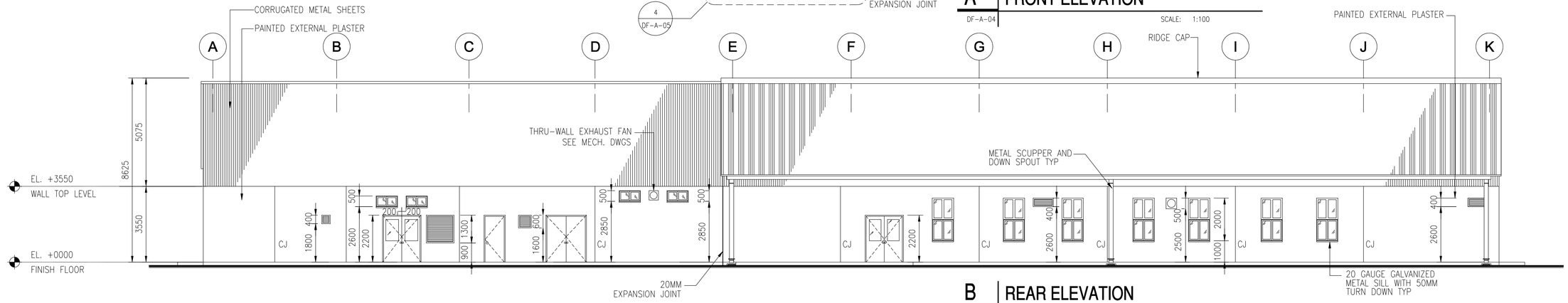

B REAR ELEVATION

DF-A-04 SCALE: 1:100

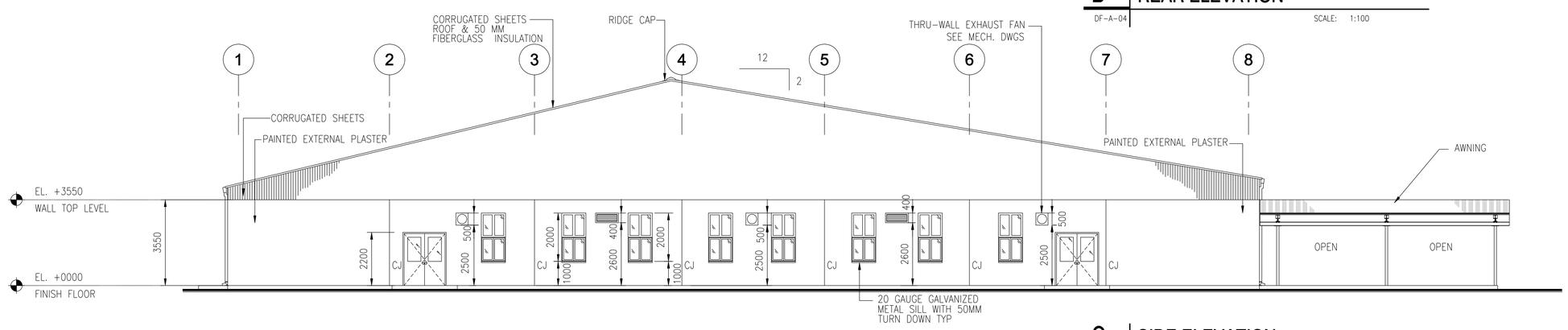

C SIDE ELEVATION

DF-A-04 SCALE: 1:100

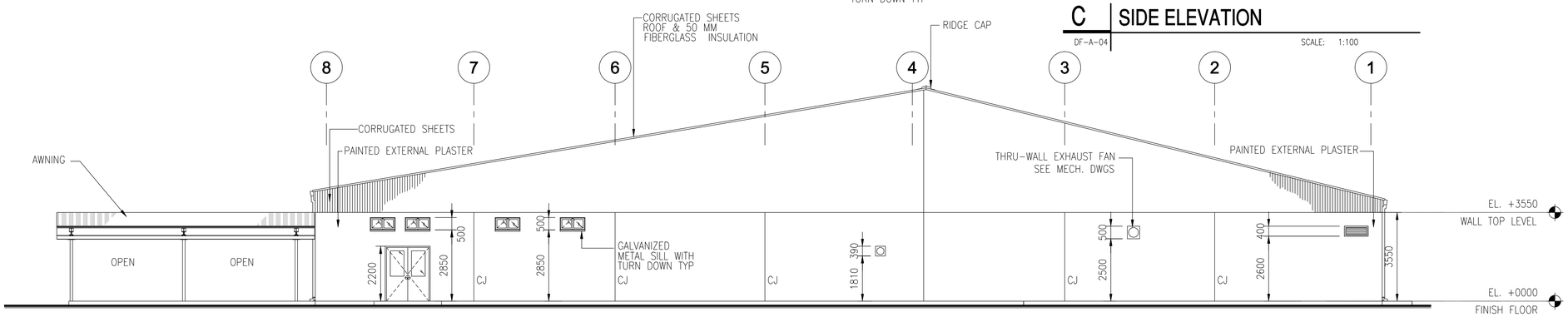

D SIDE ELEVATION

DF-A-04 SCALE: 100

1:100

SYMBOL	DESCRIPTION	DATE	APR

DESIGNED BY: YSK
DWN BY: JSG
CHK BY: PLD
DATE: 06-27-07
SUBMITTED BY: PANELLO
CHIEF, PROJ MGMT PACIFICS DEV
FILE NO.: AF0707 N-DF-A-04

US Army Corps of Engineers Transatlantic Programs Center

ANA REGIONAL BRIGADE
PAKTIKA, AFGHANISTAN

DF AC
BUILDING ELEVATION

SHEET REFERENCE NUMBER:
N
DF-A-04

$(getvar, "dwgprefix")$(getvar, "dwgname")$(edtime, 0, MON DD",", YYYY - H:MMam/pm)

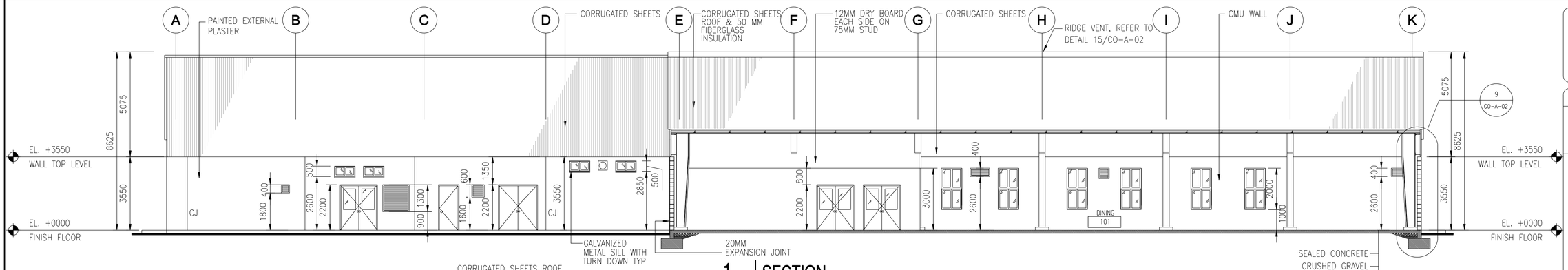

1 SECTION

DF-A-05 REF: 1/DF-A-01 SCALE: 1:100

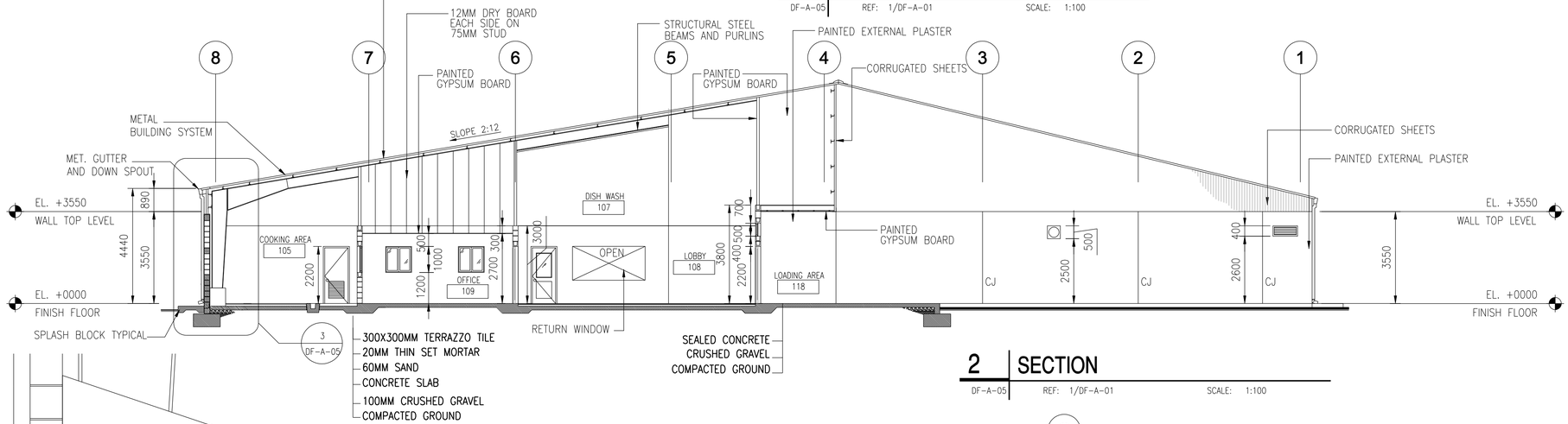

2 SECTION

DF-A-05 REF: 1/DF-A-01 SCALE: 1:100

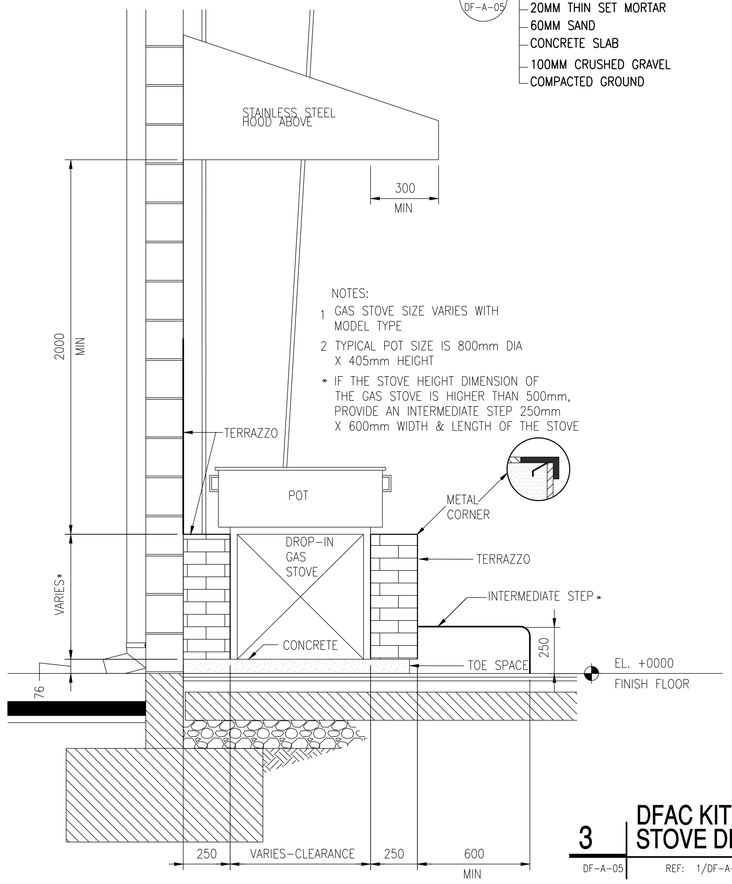

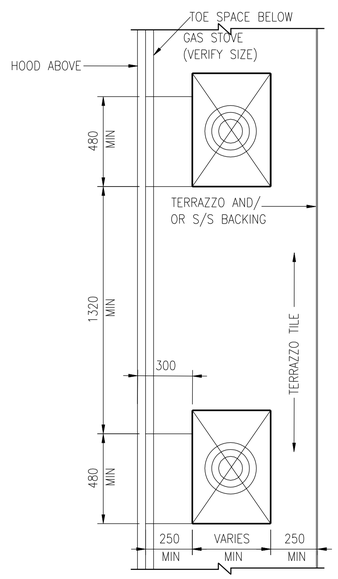

3 DFAC KITCHEN STOVE AREA STOVE DETAIL

DF-A-05 REF: 1/DF-A-01 SCALE: 1:25

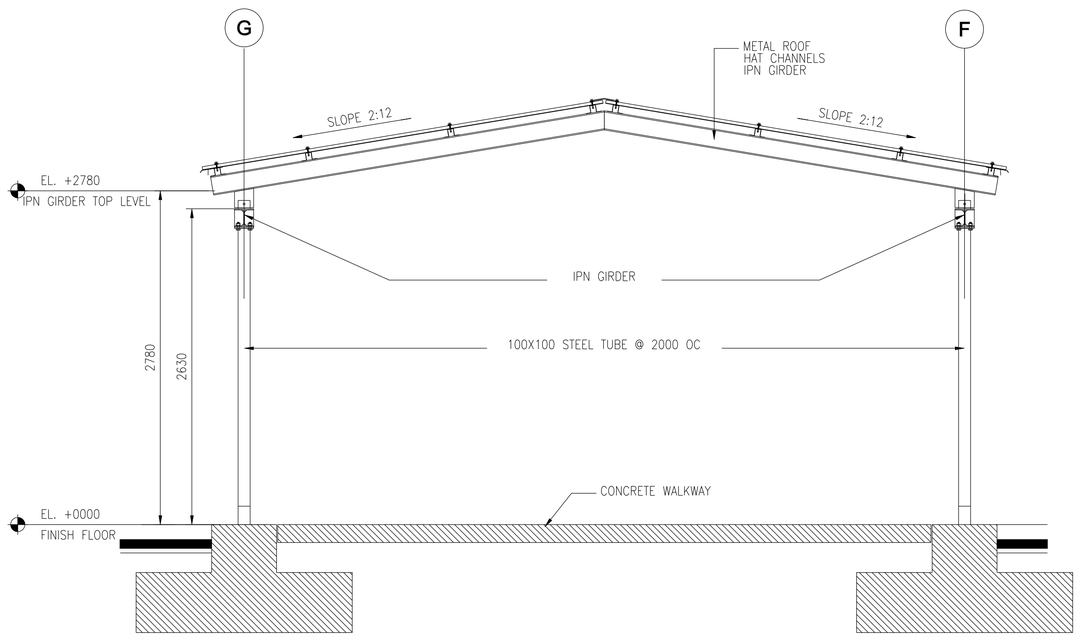

4 AWNING DETAIL

DF-A-05 REF: A/DF-A-04 SCALE: 1:25

1:100 1:25

SYMBOL	DESCRIPTION	DATE	APR

DESIGNED BY: YSK
DWN BY: JSG
CHK BY: PLD
DATE: 06-27-07
SUBMITTED BY: Philip L. DINELLO Chief, Div. Projects DEV
FILE NO.: AF0707 N-DF-A-05

US Army Corps of Engineers Transatlantic Programs Center

ANA REGIONAL BRIGADE
PAKTIKA, AFGHANISTAN

DF AC
BUILDING SECTIONS
DINING MUD GRATE

SHEET REFERENCE NUMBER:
N
DF-A-05

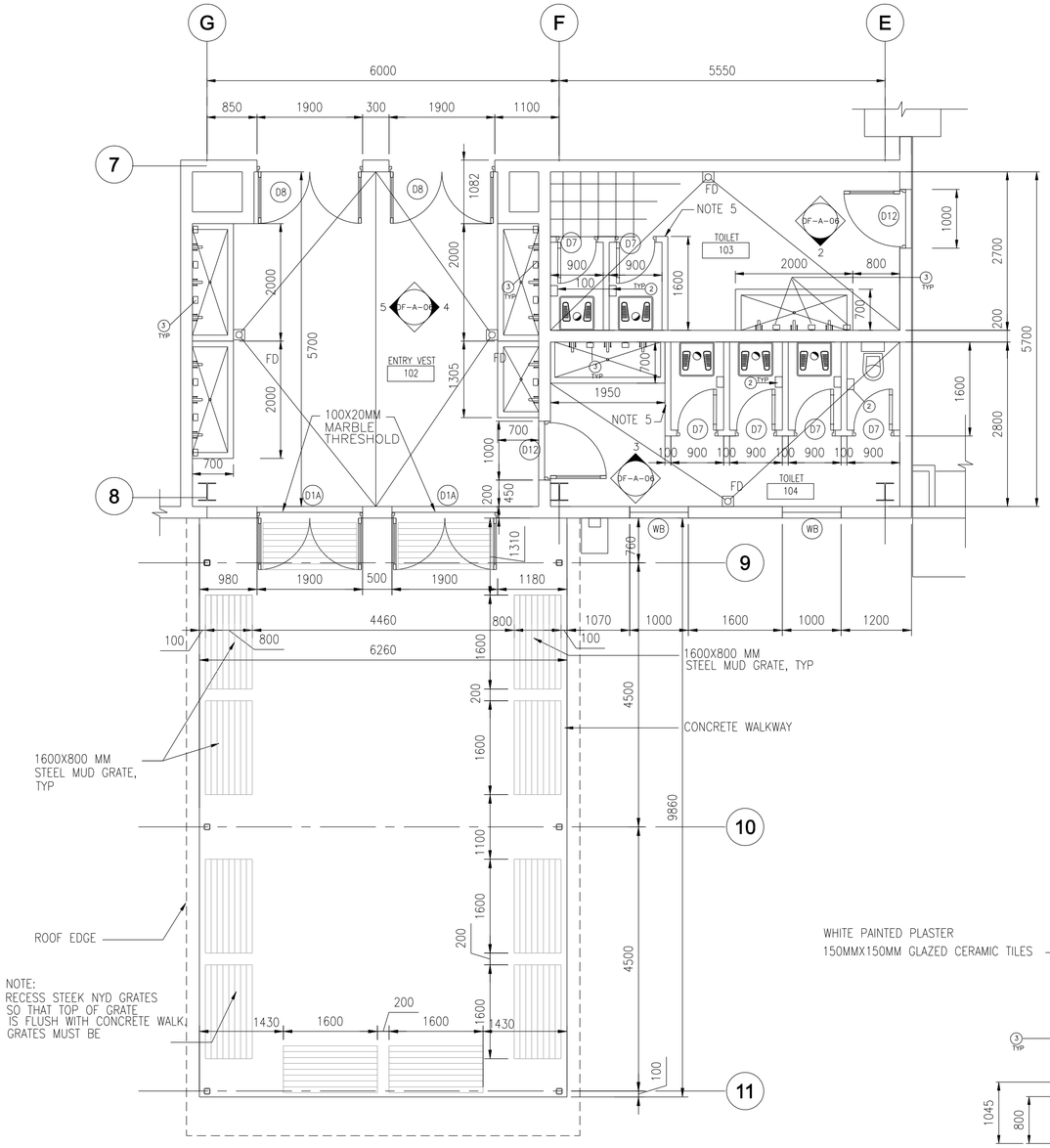

1 ENLARGED TOILET & AWNING PLAN

DF-A-06 SCALE: 1:50

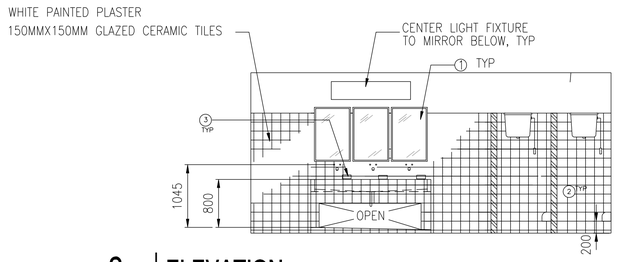

2 ELEVATION

DF-A-06 SCALE: 1:50

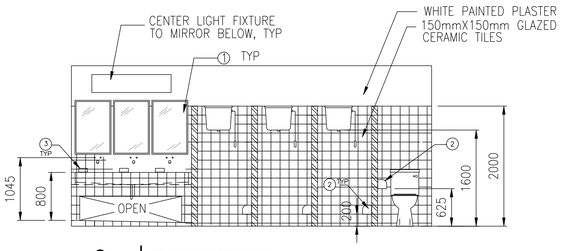

3 ELEVATION

DF-A-06 SCALE: 1:50

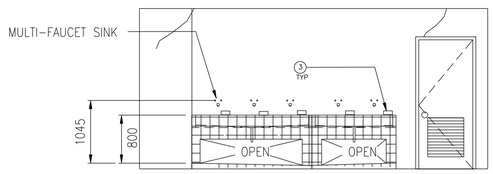

4 ELEVATION

DF-A-06 SCALE: 1:50

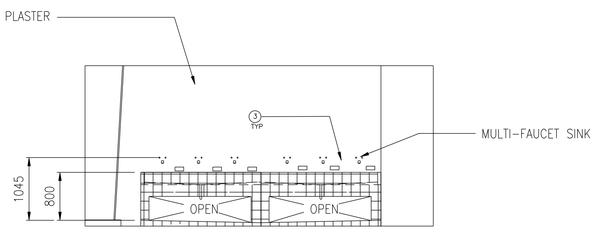

5 ELEVATION

DF-A-06 SCALE: 1:50

TOILET ACCESSORY SCHEDULE

NO.	DESCRIPTION
1	MIRROR 600X900X6MM PLATE GLASS
2	STAINLESS STEEL TOILET PAPER HOLDER
3	STAINLESS STEEL SOAP DISH

NOTES:

1- ALL WALLS ARE 200MM CMU UNLESS NOTED OTHERWISE.

2- ALL WALLS ARE UP TO CEILING LEVEL UNLESS NOTED OTHERWISE.

3- ALL DOOR JAMBS ARE 200MM UNLESS NOTED OTHERWISE.

4- ALL DIMENSIONS ARE TO FACE OF CMU UNLESS NOTED OTHERWISE.

5- PARTITIONS BETWEEN TOILETS REFERRING TO NOTE 5 SHALL BE 2000MM HEIGHT.

6- ALL VERTICAL DIMENSIONS & LEVELS ARE FROM GROUND FLOOR FINISHED SLAB. THIS ELEVATION IS +0000.

7- SEE DRAWING CO-A-05 & CO-A-06 FOR OPENING SCHEDULES & TYPES.

8- SEE DRAWING CO-A-02, CO-A-03 & CO-A-04 FOR STANDARDS DETAILS.

9- F.F.L. STANDS FOR FINISH FLOOR LEVEL.

10- SEE DETAIL 14/CO-A-04 FOR MULTI-FAUCET SINK.

NOTE:

ORIENT BUILDING ON SITE SUCH THAT TOILETS ARE ON A NORTH/SOUTH ACCESS.

SYMBOL	DESCRIPTION	DATE	APR

DESIGNED BY: YSK
DWN BY: JSG
CHK BY: PLD
DATE: 06-27-07
SUBMITTED BY: DANIELLO CHIEF, PROJ FACILITIES DEV
FILE NO.: AF0707N-DF-A-06

US Army Corps of Engineers Transatlantic Programs Center

ANA REGIONAL BRIGADE
PAKTIKA, AFGHANISTAN

DFAC
ENLARGED TOILET & AWNING PLAN

SHEET REFERENCE NUMBER:
N
DF-A-06

$(getvar, "dwgprefix")$(getvar, "dwgname")$(edtime, O, MON DD", " YYYY - HHMMam/pm)

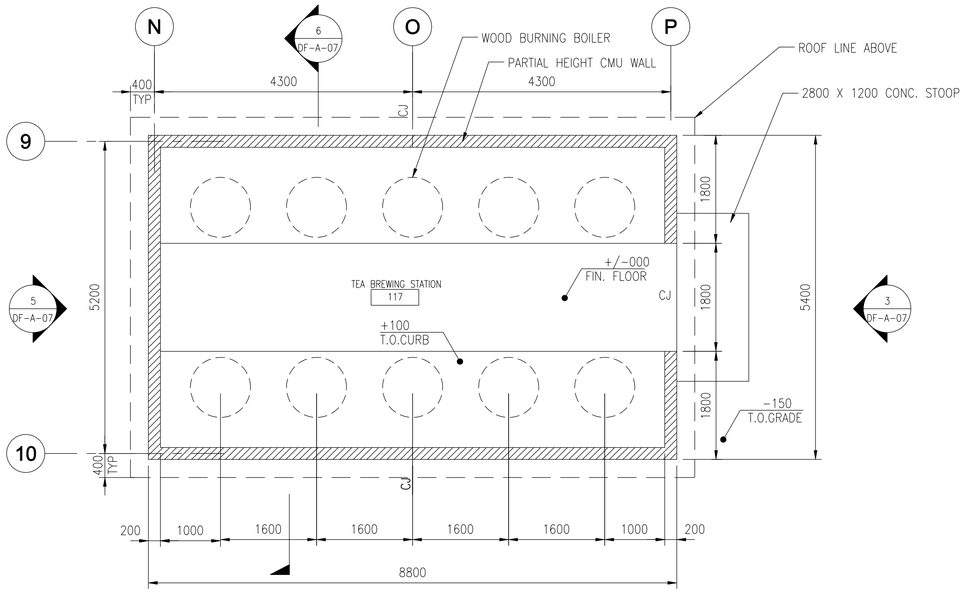

1 FLOOR PLAN

DF-A-07 SCALE: 1:50

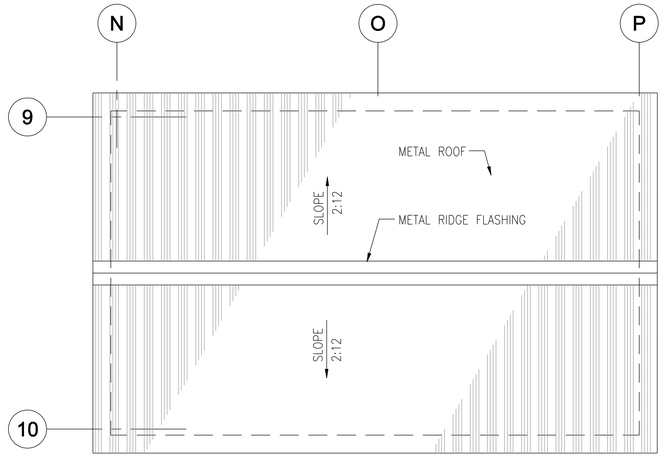

2 ROOF PLAN

DF-A-07 SCALE: 1:50

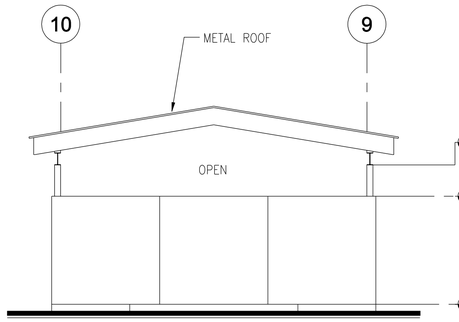

3 SIDE ELEVATION

DF-A-07 SCALE: 1:50

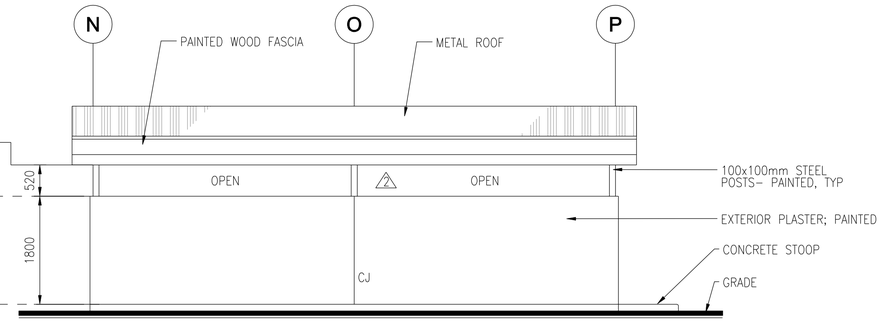

4 FRONT ELEVATION (REAR SIMILAR)

DF-A-07 SCALE: 1:50

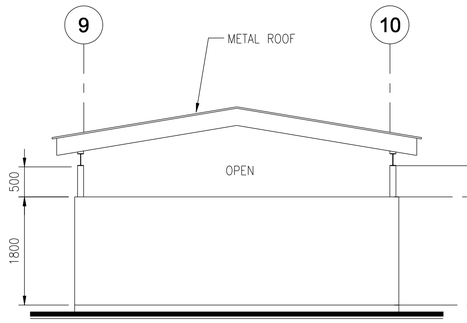

5 SIDE ELEVATION

DF-A-07 REF: 1/DF-A-07 SCALE: 1:50

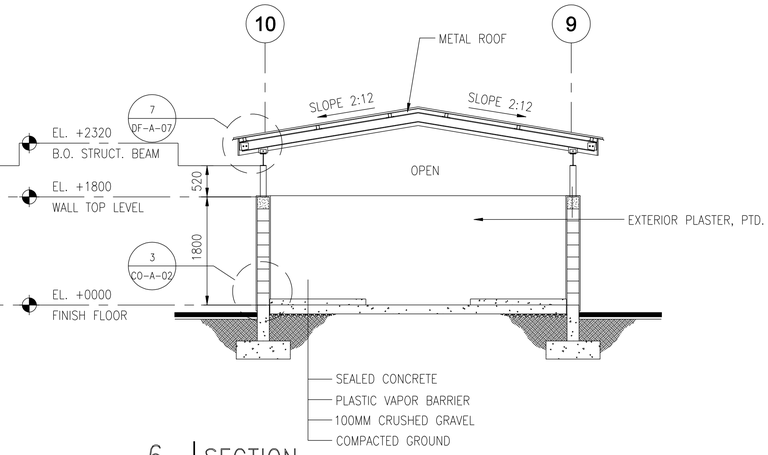

6 SECTION

DF-A-07 REF: 1/DF-A-07 SCALE: 1:50

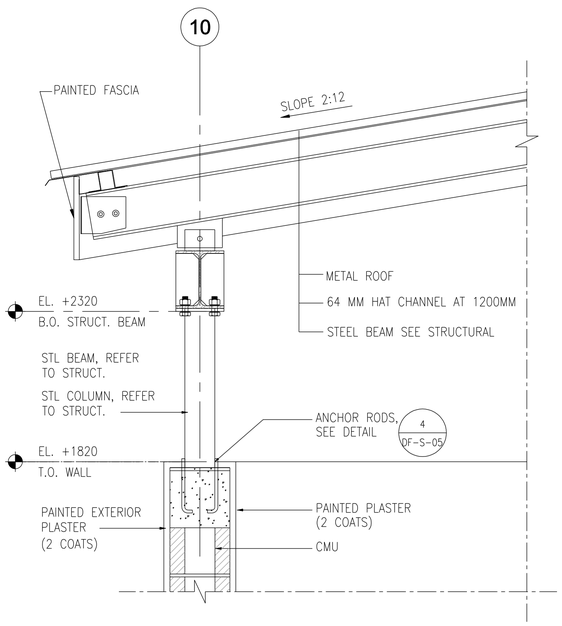

7 STEEL CONNECTION DETAIL

DF-A-07 REF: 6/DF-A-07 SCALE: 1:10

0 .50 1.00
1:10
1 0 1 2 3 4
1:50

WALL SYMBOLS:

CMU WALL

CJ CMU CONTROL JOINT

NOTES:

1- FOR FINISHING SCHEDULE SEE DF-A-01.

FLOOR AREA = 46 m2

SYMBOL	DESCRIPTION	DATE	APR

DESIGNED BY: YSK
DWN BY: JSG
CHK BY: PLD
DATE: 06-27-07
SUBMITTED BY: PHILIP J. PANELLO PLA PRACTICE DEV.
FILE NO.: AF0707N-DF-A-07

US Army Corps of Engineers Transatlantic Programs Center

ANA REGIONAL BRIGADE
PAKTIKA, AFGHANISTAN

DF AC
TEA BREWING STATION

SHEET REFERENCE NUMBER:
N
DF-A-07

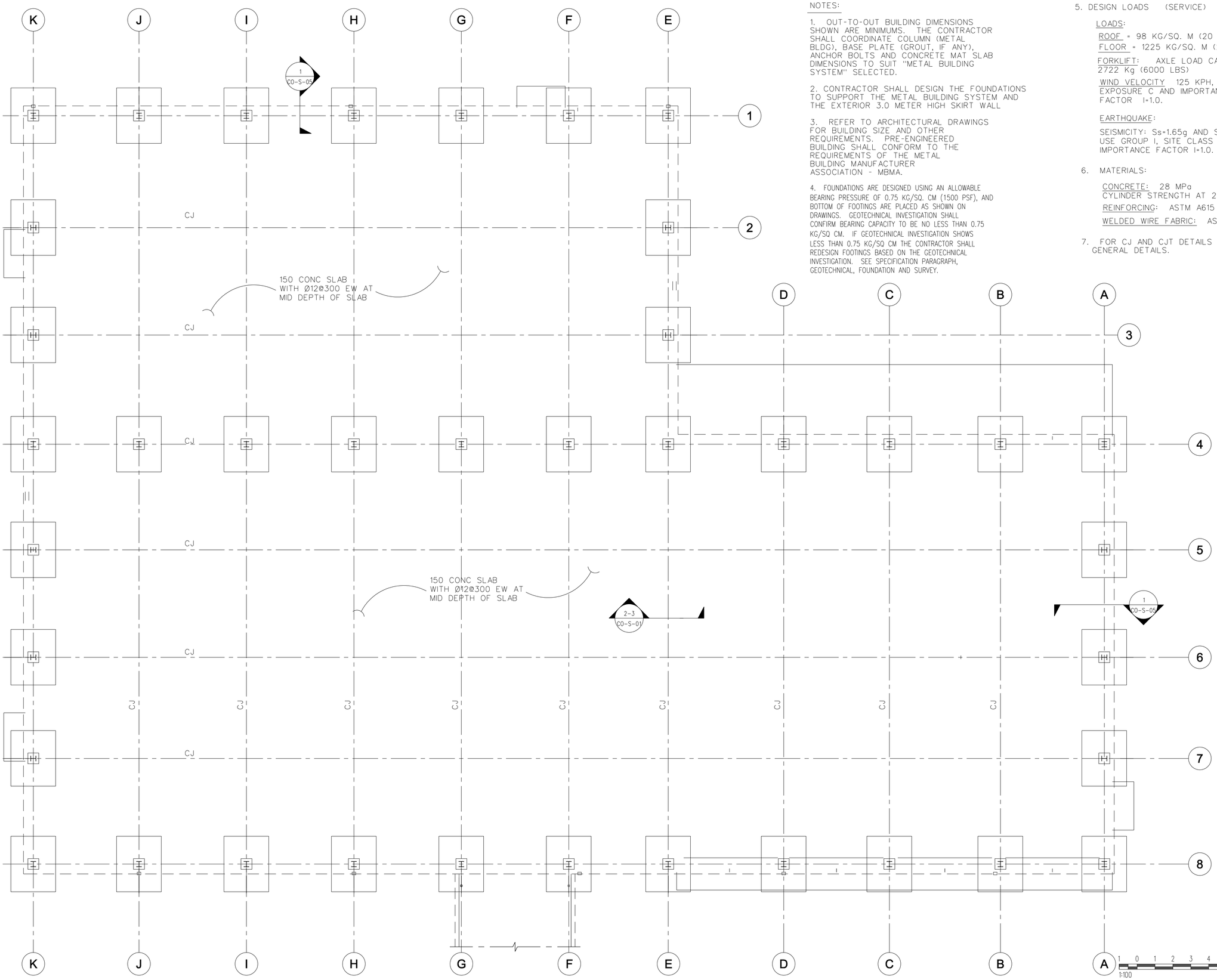

NOTES:

1. OUT-TO-OUT BUILDING DIMENSIONS SHOWN ARE MINIMUMS. THE CONTRACTOR SHALL COORDINATE COLUMN (METAL BLDG), BASE PLATE (GROUT, IF ANY), ANCHOR BOLTS AND CONCRETE MAT SLAB DIMENSIONS TO SUIT "METAL BUILDING SYSTEM" SELECTED.

2. CONTRACTOR SHALL DESIGN THE FOUNDATIONS TO SUPPORT THE METAL BUILDING SYSTEM AND THE EXTERIOR 3.0 METER HIGH SKIRT WALL

3. REFER TO ARCHITECTURAL DRAWINGS FOR BUILDING SIZE AND OTHER REQUIREMENTS. PRE-ENGINEERED BUILDING SHALL CONFORM TO THE REQUIREMENTS OF THE METAL BUILDING MANUFACTURER ASSOCIATION - MBMA.

4. FOUNDATIONS ARE DESIGNED USING AN ALLOWABLE BEARING PRESSURE OF 0.75 KG/SQ. CM (1500 PSF), AND BOTTOM OF FOOTINGS ARE PLACED AS SHOWN ON DRAWINGS. GEOTECHNICAL INVESTIGATION SHALL CONFIRM BEARING CAPACITY TO BE NO LESS THAN 0.75 KG/SQ CM. IF GEOTECHNICAL INVESTIGATION SHOWS LESS THAN 0.75 KG/SQ CM THE CONTRACTOR SHALL REDESIGN FOOTINGS BASED ON THE GEOTECHNICAL INVESTIGATION. SEE SPECIFICATION PARAGRAPH, GEOTECHNICAL, FOUNDATION AND SURVEY.

5. DESIGN LOADS (SERVICE)

LOADS:

ROOF = 98 KG/SQ. M (20 PSF)

FLOOR = 1225 KG/SQ. M (250 PSF)

FORKLIFT: AXLE LOAD CAPACITY OF 2722 Kg (6000 LBS)

WIND VELOCITY 125 KPH, EXPOSURE C AND IMPORTANCE FACTOR I=1.0.

EARTHQUAKE:

SEISMICITY: Ss=1.65g AND S_1=0.75g USE GROUP I, SITE CLASS D, IMPORTANCE FACTOR I=1.0.

6. MATERIALS:

CONCRETE: 28 MPa CYLINDER STRENGTH AT 28 DAYS

REINFORCING: ASTM A615 GRADE 60

WELDED WIRE FABRIC: ASTM A185

7. FOR CJ AND CJT DETAILS SEE GENERAL DETAILS.

1:100

DRAWING NOT TO SCALE

SYMBOL	DESCRIPTION	DATE	APR

DESIGNED BY: TCP
DATE: 06-27-07
DWN BY: TCP
SUBMITTED BY: DANIELLO CHIEF, PM PACIFIC DEV
CHK BY: KGO
FILE NO.: AF0707N-DF-S-01

US Army Corps of Engineers Transatlantic Programs Center

ANA REGIONAL BRIGADE
PAKTIKA, AFGHANISTAN

DFAC
FOUNDATION PLAN

SHEET REFERENCE NUMBER:
N
DF-S-01

$(getvar, "dwgprefix")$(getvar, "dwgname")$(edtime, 0, MON DD",". YYYY - HHMMam/pm)

NOTES:

1. SEE DWG CO-M-07 FOR TYPICAL DETAIL OF HEATING/COOLING UNIT.

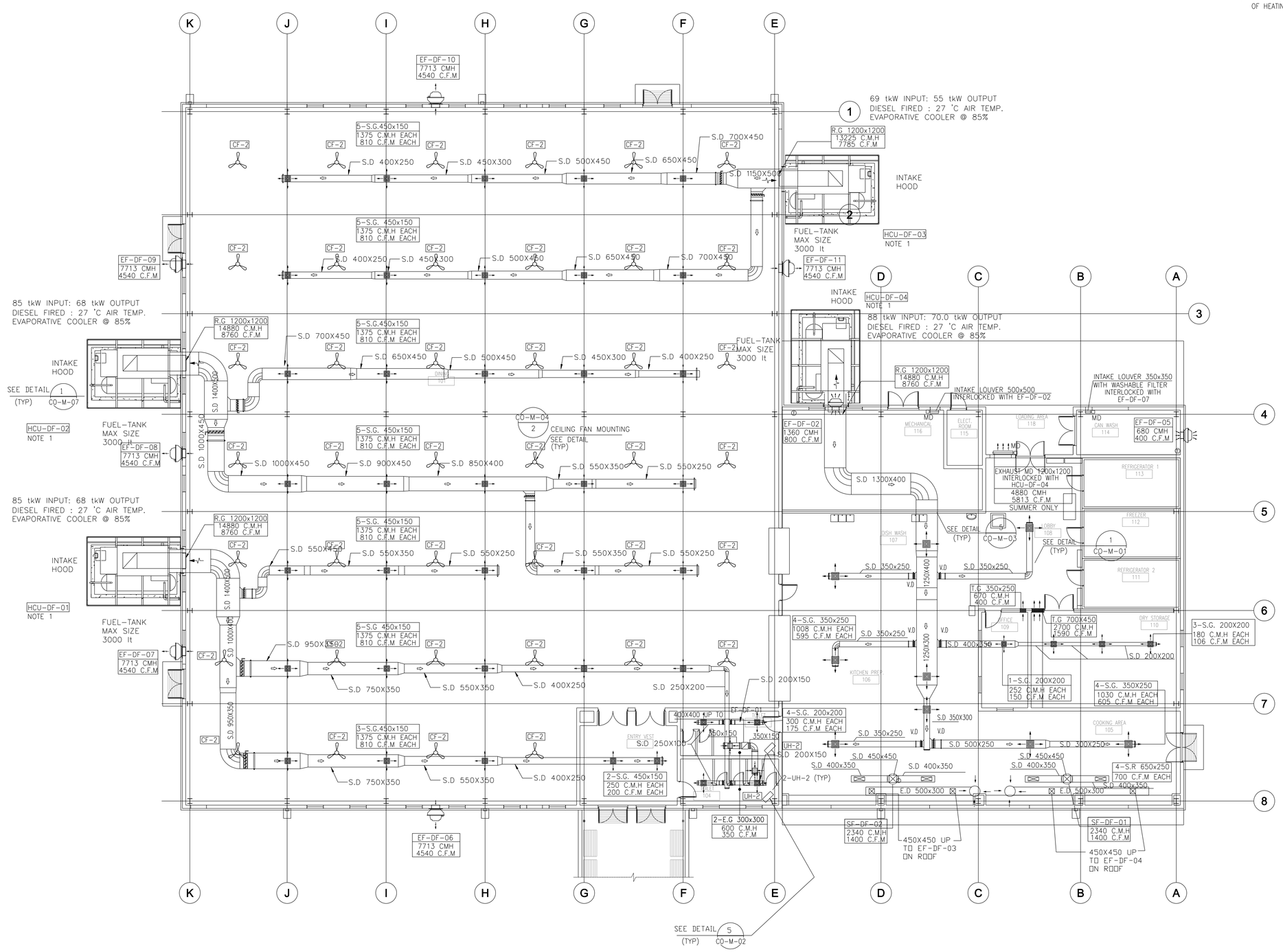

SYMBOL	DESCRIPTION	DATE	APR

DESIGNED BY: XXX
DWN BY: XXX
CHK BY: XXX
DATE: 06-27-07
SUBMITTED BY: R. CREWAL, CHIEF, BLDG SYSTEMS
FILE NO.: AF0707 DF-M-01

US Army Corps of Engineers Transatlantic Programs Center

ANA REGIONAL BRIGADE
PAKTIKA, AFGHANISTAN

DFAC

FLOOR PLAN

SHEET REFERENCE NUMBER:
N
DF-M-01

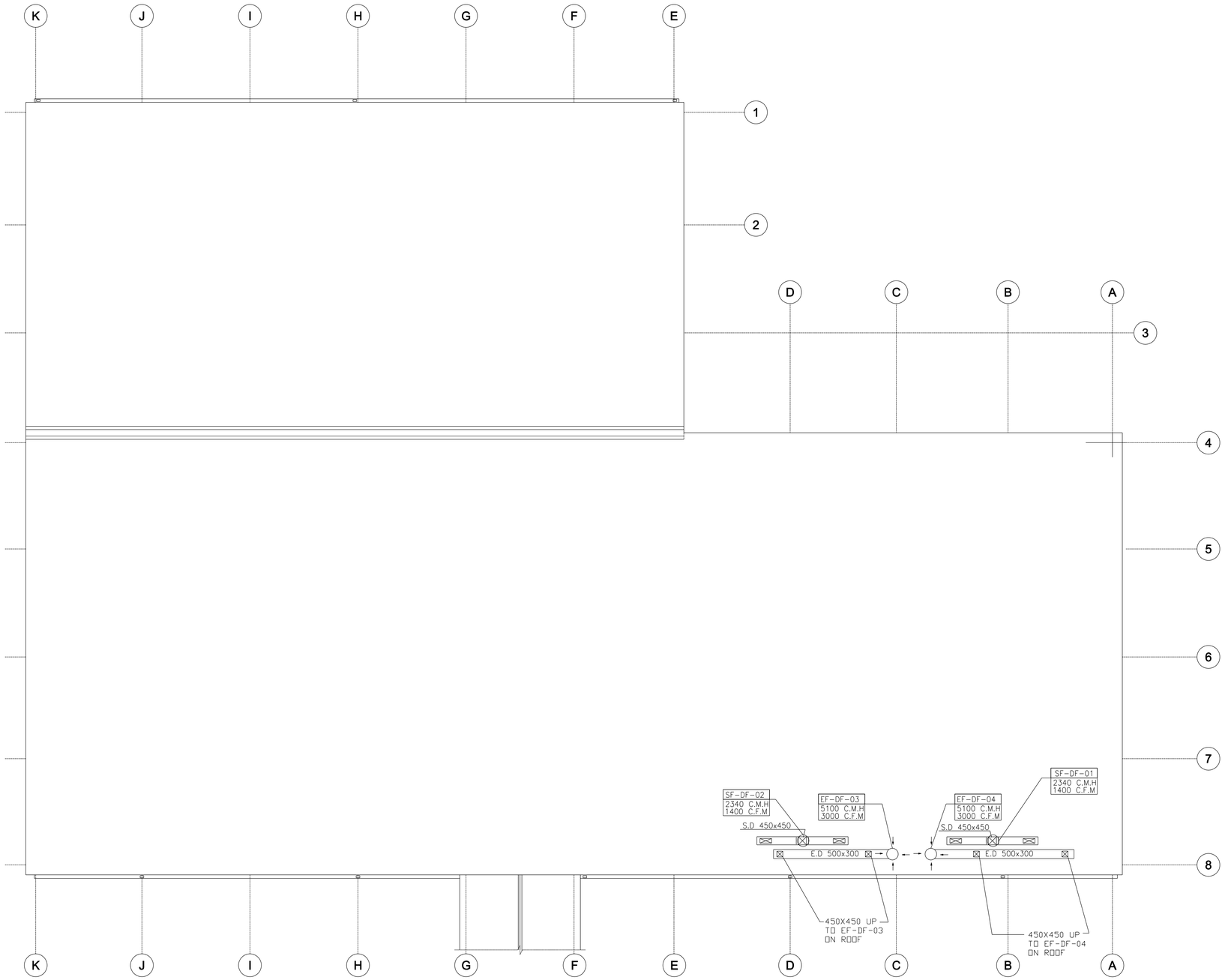

SYMBOL	DESCRIPTION	DATE	APR

DESIGNED BY: XXX
DATE: 06-27-07
DWN BY: XXX
SUBMITTED BY: R. GREWAL CHIEF, DPT BLDG SYSTEMS
CHK BY: XXX
FILE NO.: AF0707 DF-M-02

US Army Corps of Engineers
Transatlantic Programs Center

ANA REGIONAL BRIGADE
PAKTIKA, AFGHANISTAN

DFAC

ROOF PLAN

SHEET REFERENCE NUMBER:
N
DF-M-02

(PACKAGED) HEATING–COOLING UNIT (HCU)

UNIT NUMBER	OUTSIDE AIR COOLING CMH	OUTSIDE AIR HEATING CMH	TOTAL CMH	FAN SECTION EXTERNAL SP (MM-WG)	FAN SECTION KW	EVAPORATIVE WATER COOLER PUMP NOM. WATTS	PUMP BLEED-OFF (LPM)	OUTDOOR AIR DB (DEG C)	OUTDOOR AIR WB (DEG C)	SUPP. AIR DB (DEG C)	ADIABATIC EFF. (%)	FILTER SECTION FACE VELOCITY MPS	FILTER EFF. %	AIR PRESSURE DROP (MM-WG) INT	AIR PRESSURE DROP (MM-WG) FNL	DIESEL HEATER SECTION CAPACITY KW	TEMP. RISE °C	EFF. %	ELECTRICAL DATA VOLTS	PHASE	HERTZ	CONTROL DIAGRAM	INTERLOCKED EQUIPMENT	REMARKS
HCU-DF-01	16,531	3,598	16,531	38.1	7.5	80	1.26	30.6	8.33	11.7	85	1.26	30	1.26	25.4	68	22	80	380	3	50	T-1	DINING RM EXHAUST FANS	1,2,3,4
HCU-DF-02	16,531	3,598	16,531	38.1	7.5	80	1.26	30.6	8.33	11.7	85	1.26	30	1.26	25.4	68	22	80	380	3	50	T-1	DINING RM EXHAUST FANS	1,2,3,4
HCU-DF-03	13,226	2,879	13,226	35.1	5.5	80	1.26	30.6	8.33	11.7	85	1.26	30	1.26	25.4	55	22	80	380	3	50	T-1	DINING RM EXHAUST FANS	1,2,3,4
HCU-DF-04	9,880	3,310	9,880	38.1	5.5	80	1.26	30.6	8.33	11.7	85	1.26	30	1.26	25.4	70	22	80	380	3	50	T-1	--	1,2,3,4

1. MANUFACTURER SHALL PROVIDE NECESSARY TRANSFORMERS ON ALL UNITS TO MEET ELECTRICAL CONTROL REQUIREMENTS.
2. PROVIDE INTAKE HOOD WITH BIRD SCREEN AND 50 MM WASHABLE FILTER.
3. PROVIDE OUTSIDE AIR CONTROL DAMPERS AS SHOWN ON TEMPERATURE CONTROL DIAGRAM DRAWING XX-XX-XX
4. PROVIDE RETURN AIR CONTROL VALVE AS SHOWN ON TEMPERATURE CONTROL DIAGRAM DRAWING XX-X-XX

EXHAUST FAN SCHEDULE (EF)

UNIT NUMBER	SERVICE	TYPE	AIR QUANTITY CMH	AIR QUANTITY CFM	MINIMUM WHEEL DIAMETER MM	MINIMUM WHEEL DIAMETER INCHES	FAN RPM	STATIC PRESSURE mmH2O	STATIC PRESSURE IN W.G.	ELECTRICAL DATA H.P.	VOLTS	PHASE	HERTZ	TEMP CONTROL DIAGRAM	INTERLOCK WITH	DRIVE TYPE	REMARKS
EF-DF-01	TOILET	R-CTFG-GP	1185	700	–	–	1425	12.7	0.5	1/4	220	1	50	E-4	--	DIRECT	NOTES 1, 2
EF-DF-02	M/C KITCHEN	W-CTFG-UB	1355	800	–	–	1425	8.13	0.32	1/4	220	1	50	E-2	--	DIRECT	NOTES 1,2
EF-DF-03	KITCHEN	R-CTFG-UB	5100	3000	–	–	1435	50.75	2.0	5.5	220	3	50	E-2	SF-DF-01	DIRECT	NOTES 1
EF-DF-04	KITCHEN	R-CTFG-UB	5100	3000	–	–	1435	50.75	2.0	5.5	220	3	50	E-2	SF-DF-02	DIRECT	NOTES 1
EF-DF-05	CAN WASH	W-CTFG-GP	675	400	–	–	1200	5.1	0.2	1/10	220	1	50	E-2	T-STAT	DIRECT	NOTES 1
EF-DF-06	DINING	W-CTFG-GP	7713	4540	–	–	1585	12.7	0.5	1.0	220	1	50	E-4	T-1	BELT	NOTES 1
EF-DF-07	DINING	W-CTFG-GP	7713	4540	–	–	1585	12.7	0.5	1.0	220	1	50	E-4	T-1	BELT	NOTES 1
EF-DF-08	DINING	W-CTFG-GP	7713	4540	–	–	1585	12.7	0.5	1.0	220	1	50	E-4	T-1	BELT	NOTES 1
EF-DF-09	DINING	W-CTFG-GP	7713	4540	–	–	1585	12.7	0.5	1.0	220	1	50	E-4	T-1	BELT	NOTES 1
EF-DF-010	DINING	W-CTFG-GP	7713	4540	–	–	1585	12.7	0.5	1.0	220	1	50	E-4	T-1	BELT	NOTES 1
EF-DF-11	DINING	W-CTFG-GP	7713	4540	–	–	1585	12.7	0.5	1.0	220	1	50	E-4	T-1	BELT	NOTES 1

MANUFACTURER SHALL PROVIDE NECESSARY TRANSFORMERS ON ALL UNITS TO MEET ELECTRICAL REQUIREMENT.

NOTE 1. SUPPLIED WITH BACKDRAFT DAMPER
NOTE 2. ALL EXHAUST FANS WITH SINGLE PHASE POWER ARE TO BE PROVIDED w/ A FACTORY MOUNTED DISCONNECT SWITCH.

FAN SCHEDULE TYPE – LEGEND
(REF. EXHAUST AND SUPPLY FAN SCHEDULES)
R-CTFG-GP

R =ROOF
W =WALL
IL =INLINE
CL =CEILING

GP = GENERAL PURPOSE
EP = EXPLOSION PROOF
DB = DOWN BLAST
UB = UP BLAST
UT = UTILITY SET

CTFG = CENTRIFUGAL
PROP = PROPELLER
TUBA = TUBE AXIAL

CEILING FAN SCHEDULE (CF)

UNIT NUMBER	QUANTITY	TYPE (NOTE 1)	FAN DIAMETER	MAX WATTS	ELECTRICAL DATA VOLTS	PHASE	HERTZ	REMARKS
CF-2	40	A	1422 mm (56 in)	65	220	1	50	3-SPEED

NOTES:-

1- (A) WITHOUT LIGHT FIXTURE
2- BOTTOM OF FAN MOUNTING HEIGHT = MINIMUM 2500mm A.F.F
3- PROVIDE WITH REMOTE WALL MOUNTED, ON-OFF SWITCH LOCATED ON ELECTRICAL DRAWINGS.

ELECTRIC UNIT HEATER SCHEDULE (UH)

UNIT NUMBER	QTY.	HEATING CAPACITY TOTAL (KW)	AIR FLOW RATE CMU	AIR FLOW RATE CFM	ELECTRICAL DATA VOLTS	PHASE	HERTZ	REMARKS
UH-2	4	2.0	510	300	220	1	50	WALL SUSPENDED

MANUFACTURER SHALL PROVIDE BUILT-IN THERMOSTAT/ON-OFF SWITCH WITH OVERLOAD PROTECTION.

SUPPLY FAN SCHEDULE (SF)

UNIT NUMBER	SERVICE	TYPE	AIR QUANTITY CMH	AIR QUANTITY CFM	MAXIMUM OUTLET VELOCITY M/S	MAXIMUM OUTLET VELOCITY FPM	FAN RPM	STATIC PRESSURE mmH2O	STATIC PRESSURE IN W.G.	ELECTRICAL DATA H.P.	VOLTS	PHASE	HERTZ	TEMP CONTROL DIAGRAM	INTERLOCK WITH	DRIVE TYPE	REMARKS
SF-DF-01	KITCHEN	FAN SECTION	2340	1400	6.1	1200	1425	12.7	0.5	1.0	220	1	50	S-1	KITCHEN EXHAUST FAN	DIRECT	NOTES 1,2
SF-DF-02	KITCHEN	FAN SECTION	2340	1400	6.1	1200	1425	12.7	0.5	1.0	220	1	50	S-1	KITCHEN EXHAUST FAN	DIRECT	NOTES 1,2

NOTES

1. INCLUDE 2" WASHABLE FILTER RACK, MOTOR OPERATED DAMPER, BACG FILTER, 12" DEPTH BIRDSCREEN AND WEATHER HOOD
2. HOOD SUPPLY FAN WILL BE INTERLOCKED WITH HOOD EXHAUST FANS.

SYMBOL	DESCRIPTION	DATE	APR

DESIGNED BY: XXX
DWN BY: XXX
CHK BY: XXX
DATE: 06-27-07
SUBMITTED BY: R. GREWAL
CHIEF, DIV. BLDG SYSTEMS
FILE NO.: AF0707 DF-M-03

US Army Corps of Engineers
Transatlantic Programs Center

ANA REGIONAL BRIGADE
PAKTIKA, AFGHANISTAN

DFAC
SCHEDULES

SHEET REFERENCE NUMBER:
N
DF-M-03

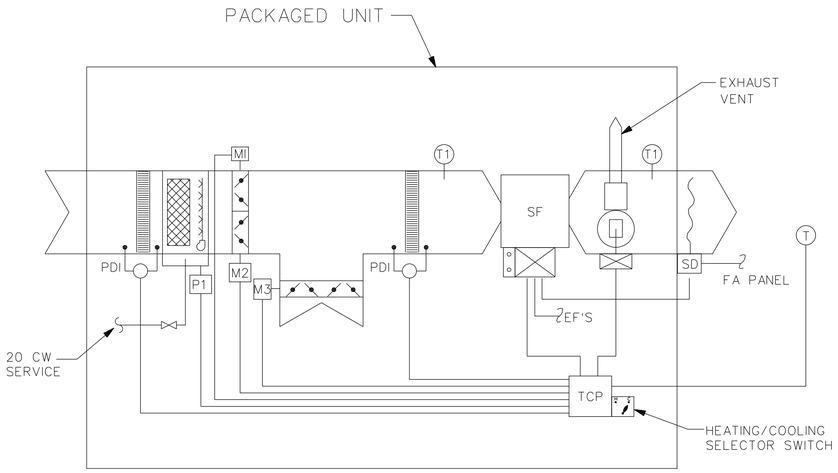

SET POINT

HTG.	CLG.
21°C	1. 23°C 2. 25°C

TEMPERATURE CONTROL DIAGRAM
(HCU-DF-01, HCU-DF-02, HCU-DF-03, HCU-DF-04)

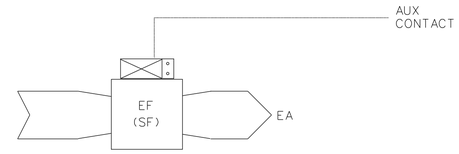

CO TEMPERATURE CONTROL DIAGRAM E-1
CO

CO

E-1 SEQUENCE OF OPERATION

START-UP
THE EXHAUST (SUPPLY) FAN SHALL BE STARTED MANUALLY BY PLACING THE HAND-OFF-AUTO (H-O-A) SWITCH IN THE HAND POSITION. IN THE AUTO POSITION, AN AUXILIARY CONTACT IN THE INTERLOCKED EQUIPMENT MOTOR STARTER SHALL START THE FAN.
ST
ST

PACKAGED HEATING-COOLING UNIT -SEQUENCE OF OPERATION

START-UP
THE SUPPLY FAN (SF) SHALL BE STARTED MANUALLY BY PLACING THE HAND-OFF-AUTO SWITCH AT THE CONTROL PANEL IN THE HAND POSITION. IN THE AUTO POSITION A PROGRAMMABLE TIME CLOCK SHALL START/STOP THE FAN. DURING THE OCCUPIED TIME, THE FAN SHALL OPERATE CONTINUOUSLY.

OPERATING MODES
HEATING OR COOLING MODE SELECTION SHALL BE CONTROLLED OFF A HEATING-COOLING SELECTION SWITCH ON THE CONTROL PANEL. THE UNIT SHALL OPERATE AS A 100% OA COOLING UNIT BY PLACING THE MODE SWITCH IN THE COOLING MODE. IN THE HEATING MODE THE UNIT SHALL PROVIDE MINIMUM FRESH AIR VENTILATION AND EXHAUST MAKE-UP AIR.

DAMPERS
COOLING MODE: THE MINIMUM OUTSIDE AIR (OA) DAMPER (M1) SHALL BE INTERLOCKED TO OPEN WHEN THE FAN IS ENERGIZED. THE TWO POSITION DAMPER (M2), AND RETURN AIR (RA) DAMPER (M3) SHALL BE CONTROLLED BY THERMOSTAT (T1). WHEN THERMOSTAT T1 IS BELOW THE SET POINT 1 (23 C) DAMPER M2 SHALL BE CLOSED AND M3 SHALL BE IN THE OPEN POSITION. WHEN THERMOSTAT T1 IS ABOVE THE SET POINT 1 (23 C) DAMPER M2 SHALL BE OPEN AND DAMPER M3 SHALL BE IN THE CLOSED POSITION.

HEATING MODE: THE OUTSIDE AIR DAMPER (M1) AND RETURN AIR DAMPER (M3) SHALL OPEN WHEN THE FAN IS ENERGIZED AND CLOSE WHEN THE FAN IS DEENERGIZED. OA DAMPER M2 SHALL STAY CLOSED.

FILTER
PRESSURE DIFFERENTIAL INDICATOR (PDI) PROVIDES LOCAL INDICATION OF PRESSURE DROP ACROSS THE FILTER. ON A RISE IN PRESSURE DROP TO ITS SET POINT, PRESSURE DIFFERENTIAL SWITCH SHALL TURN ON THE DIRTY FILTER ALARM LIGHT AT THE CONTROL PANEL.

TEMPERATURE CONTROL
HEATING (WINTER) MODE: THE DIESEL OIL HEATER (DH) SHALL BE STAGED BY A SPACE THERMOSTAT (T) TO CONTROL THE SUPPLY AIR TEMPERATURE OFF THE UNIT. EVAPORATIVE COOLER CONTROLS SHALL BE LOCKED OUT DURING THE WINTER MODE.
COOLING (SUMMER) MODE: HEATER CONTROLS SHALL BE LOCKED OUT DURING THE SUMMER MODE. THE EVAPORATIVE COOLING WATER PUMP (P1) SHALL BE STAGED BY THE SPACE THERMOSTAT (T) TO MAINTAIN THE SPACE TEMPERATURE SET POINT 2 (25 C).

FAN INTERLOCKS
THE SMOKE DETECTOR (SD) SHALL BE INTERLOCKED TO STOP THE SUPPLY FAN (SF) IN THE EVENT OF SMOKE IN THE SUPPLY DUCT. THE SMOKE DETECTOR SHALL BE CONNECTED TO THE BUILDING FIRE ALARM PANEL.

THE EXHAUST FANS (EF) INDICATED IN THE HCU UNIT SCHEDULE SHALL BE INTERLOCKED TO RUN WHEN THE TWO POSITION DAMPER (M2) IS IN THE OPEN POSITION.

SYMBOL	DESCRIPTION	DATE	APR

DESIGNED BY: XXX	DATE: 06-27-07
DWN BY: XXX	SUBMITTED BY: R. CRERWAL CHIEF, DDC BLDG SYSTEMS
CHK BY: XXX	FILE NO.: AF0707 N-DF-M-04

US Army Corps of Engineers Transatlantic Programs Center

ANA REGIONAL BRIGADE
PAKTIKA, AFGHANISTAN

DF AC
DINING FACILITY
TEMPERATURE CONTROL DIAGRAM

SHEET REFERENCE NUMBER:
N
DF-M-04

$(getvar, "dwgprefix")$(getvar, "dwgname")$(edtime, O, MON DD", " YYYY - H:MMam/pm)

GREASE INTERCEPTOR SCHEDULE

SYMBOL	LOCATION	FLOW GPM	DIMENSIONS (NOMINAL)
GREASE INTERCEPTOR	DINING FACILITY	100	AS PER MANUFACTURE DATA SHEET

NOTES:

1. SEE SHEET CO-P-01 & CO-P-02 & CO-P-07 FOR SYMBOLS, ABBREVIATIONS, GENERAL NOTES AND EQUIPMENT SCHEDULES.
2. WATER PIPE MATERIAL IS GALVANIZED STEEL SCHEDULE 40 OR CPVC.
3. INSULATION & JACKET SHALL BE PROVIDED FOR EXPOSED WATER PIPES.
4. INSULATION SHALL BE PROVIDED FOR COLD & HOT WATER PIPES.

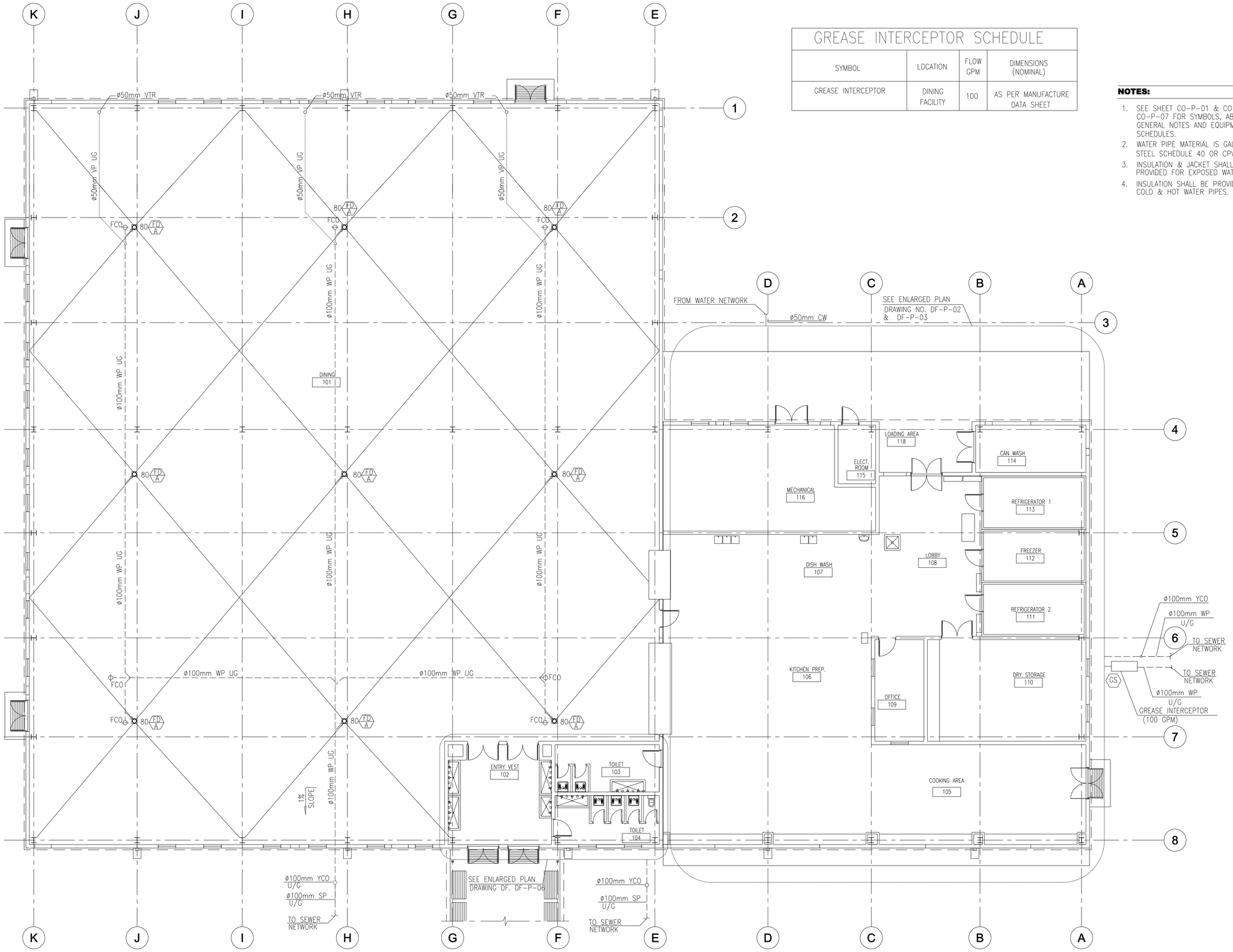

1 FLOOR PLAN

DF-P-01 SCALE: 1:100

1:100

SYMBOL	DESCRIPTION	DATE	APR

DESIGNED BY: XXX
DATE: 06-27-07
DWN. BY: XXX
SUBMITTED BY: R. CRESWAL CHIEF, PDT BLDG SYSTEMS
CHK. BY: XXX
FILE NO.: AF0707 N-DF-P-01

US Army Corps of Engineers Transatlantic Programs Center

ANA REGIONAL BRIGADE
PAKTIKA, AFGHANISTAN

DF AC
DINING FACILITY
PLUMBING PIPING PLAN

SHEET REFERENCE NUMBER:
N
DF-P-01

$(getvar, "dwgprefix")$(getvar, "dwgname")$(edtime, 0, MON DD",", YYYY - HHMMam/pm)

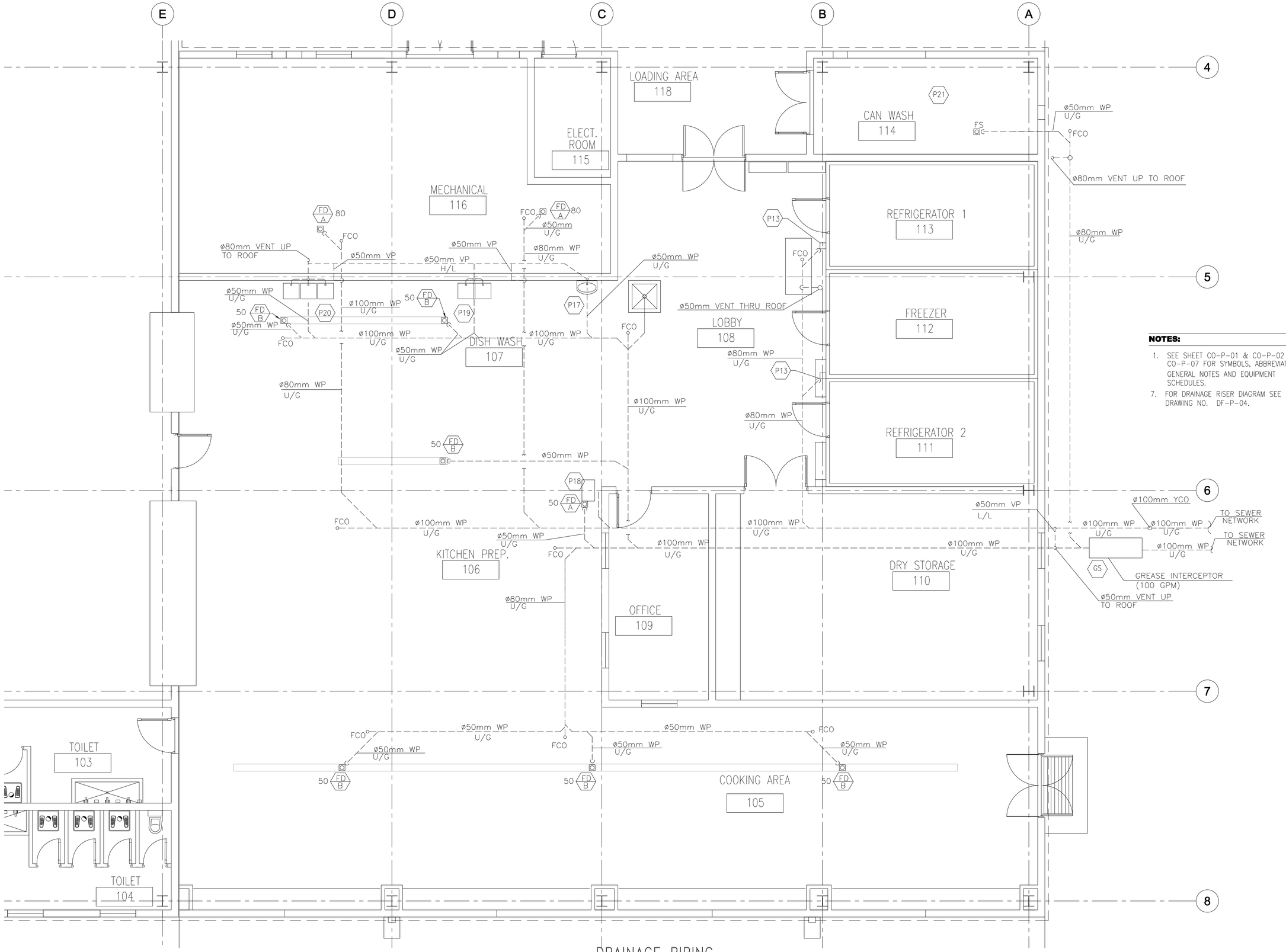

NOTES:

1. SEE SHEET CO-P-01 & CO-P-02 & CO-P-07 FOR SYMBOLS, ABBREVIATIONS, GENERAL NOTES AND EQUIPMENT SCHEDULES.
7. FOR DRAINAGE RISER DIAGRAM SEE DRAWING NO. DF-P-04.

1 DRAINAGE PIPING ENLARGED FLOOR PLAN

DF-P-02 SCALE: 1:50

1:50

SYMBOL	DESCRIPTION	DATE	APR

DESIGNED BY: XXX
DWN BY: XXX
CHK BY: XXX
DATE: 06-27-07
SUBMITTED BY: R. GREWAL, CHIEF, BLDG SYSTEMS
FILE NO.: AF0707N-DF-P-02

US Army Corps of Engineers Transatlantic Programs Center

ANA REGIONAL BRIGADE
PAKTIKA, AFGHANISTAN

DF AC
DRAINAGE PIPING
ENLARGED FLOOR PLAN

SHEET REFERENCE NUMBER:
N
DF-P-02
1 1

$(getvar, "dwgprefix")$(getvar, "dwgname")$(edtime, O, MON DD",." YYYY - HHMMam/pm)

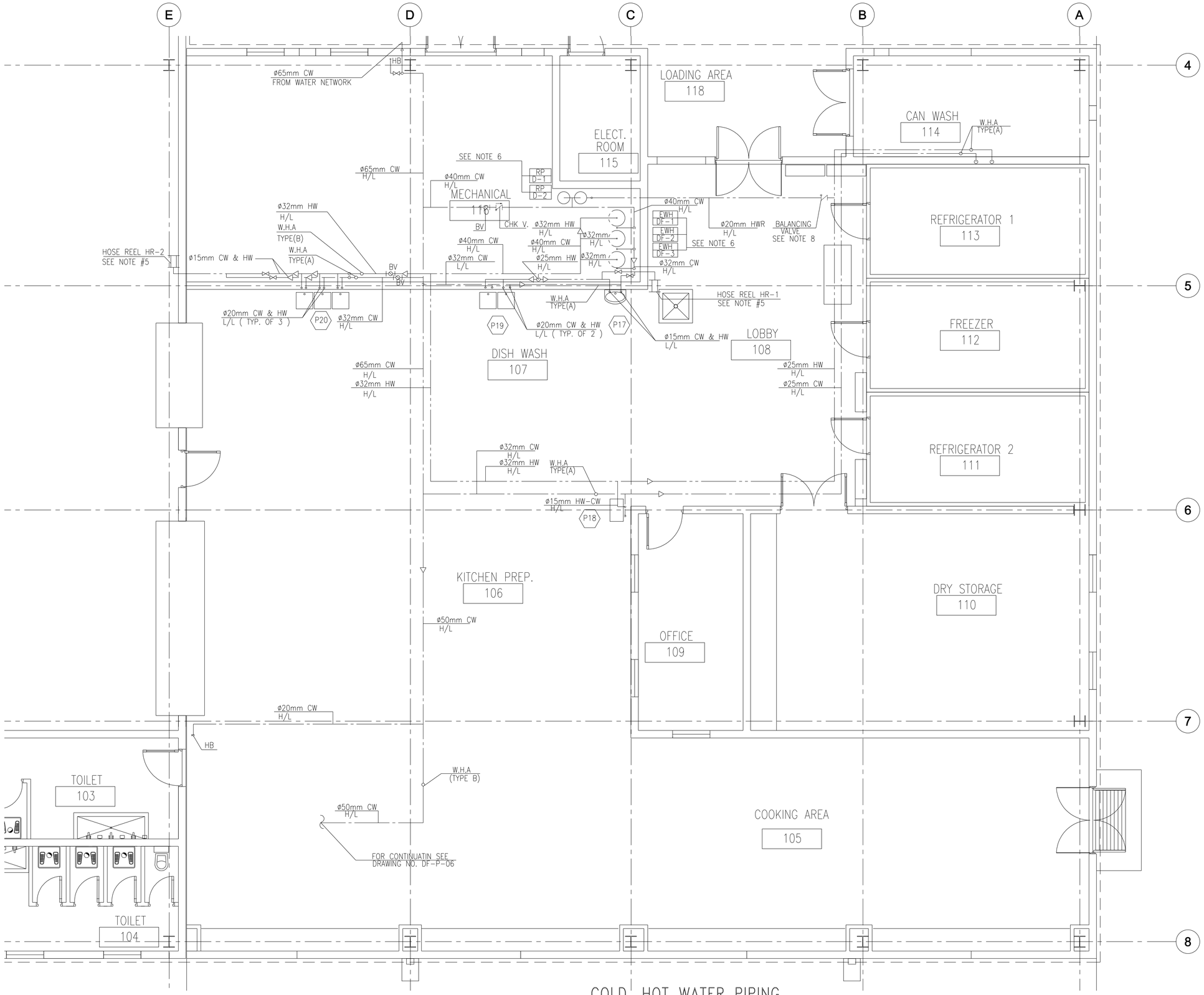

1 COLD, HOT WATER PIPING
NLARGED FLOOR PLAN

DF-P-03

SCALE: 1:50

1:50

NOTES:

1. SEE SHEET CO-P-01 & CO-P-02 & CO-P-07 FOR SYMBOLS, ABBREVIATIONS, GENERAL NOTES AND EQUIPMENT SCHEDULES.
2. WATER PIPE MATERIAL IS GALVANIZED STEEL SCHEDULE 40 OR CPVC.
3. INSULATION & JACKET SHALL BE PROVIDED FOR EXPOSED WATER PIPES.
4. INSULATION SHALL BE PROVIDED FOR COLD & HOT WATER PIPES.
5. HOSE REEL, MOUNT TO COLUMN, SET BOTTOM AT +2 M ABOVE FLOOR.
6. THE WATER HEATER SCHEDULE AND PUMP SCHEDULE ON SHEET (CO-P-01).
7. FOR WATER PIPING ISOMETRIC DIAGRAM SEE DRAWING NO. DF-P-05.
8. FOR BALANCING VALVE SEE DRAWING NO. CO-P-02 .

SYMBOL	DESCRIPTION	DATE	APR

DESIGNED BY: XXX
DWN BY: XXX
CHK BY: XXX
DATE: 06-27-07
SUBMITTED BY: R. CREWAL CHIEF, BLDG SYSTEMS
FILE NO.: AF0707N-DF-P-03

US Army Corps of Engineers
Transatlantic Programs Center

ANA REGIONAL BRIGADE
PAKTIKA, AFGHANISTAN

DF AC

COLD, HOT WATER PIPING PLAN

SHEET REFERENCE NUMBER:
N
DF-P-03
1 1

$(getvar, "dwgprefix")$(getvar, "dwgname")$(edtime, O, MON DD", " YYYY - HHMMam/pm)

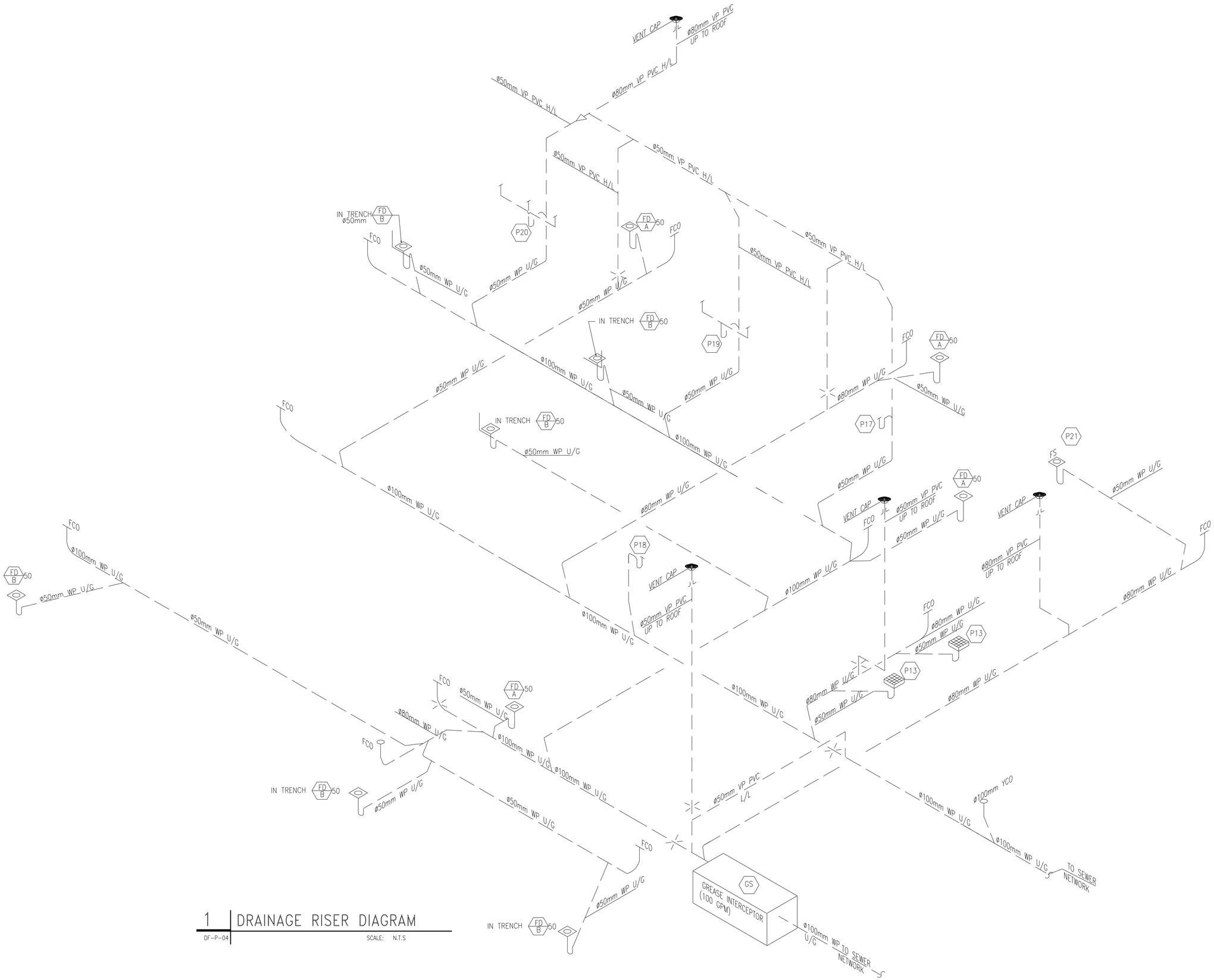

1 DRAINAGE RISER DIAGRAM

DF-P-04

SCALE: N.T.S

SYMBOL	DESCRIPTION	DATE	APR

DESIGNED BY: XXX	DATE: 06-27-07		
DWN BY: XXX	SUBMITTED BY: R. CREWAL CHIEF, DIST. BLDG. SYSTEMS		
CHK BY: XXX	FILE NO.: AF0707DF-P-04		

US Army Corps of Engineers Transatlantic Programs Center

ANA REGIONAL BRIGADE
PAKTIKA, AFGHANISTAN

DF AC

DRAINAGE RISER DIAGRAM

SHEET REFERENCE NUMBER:
N
DF-P-04
1 1

$(getvar, "dwgprefix")$(getvar, "dwgname")$(edtime, 0, MON DD,"; YYYY - H:MMam/pm)

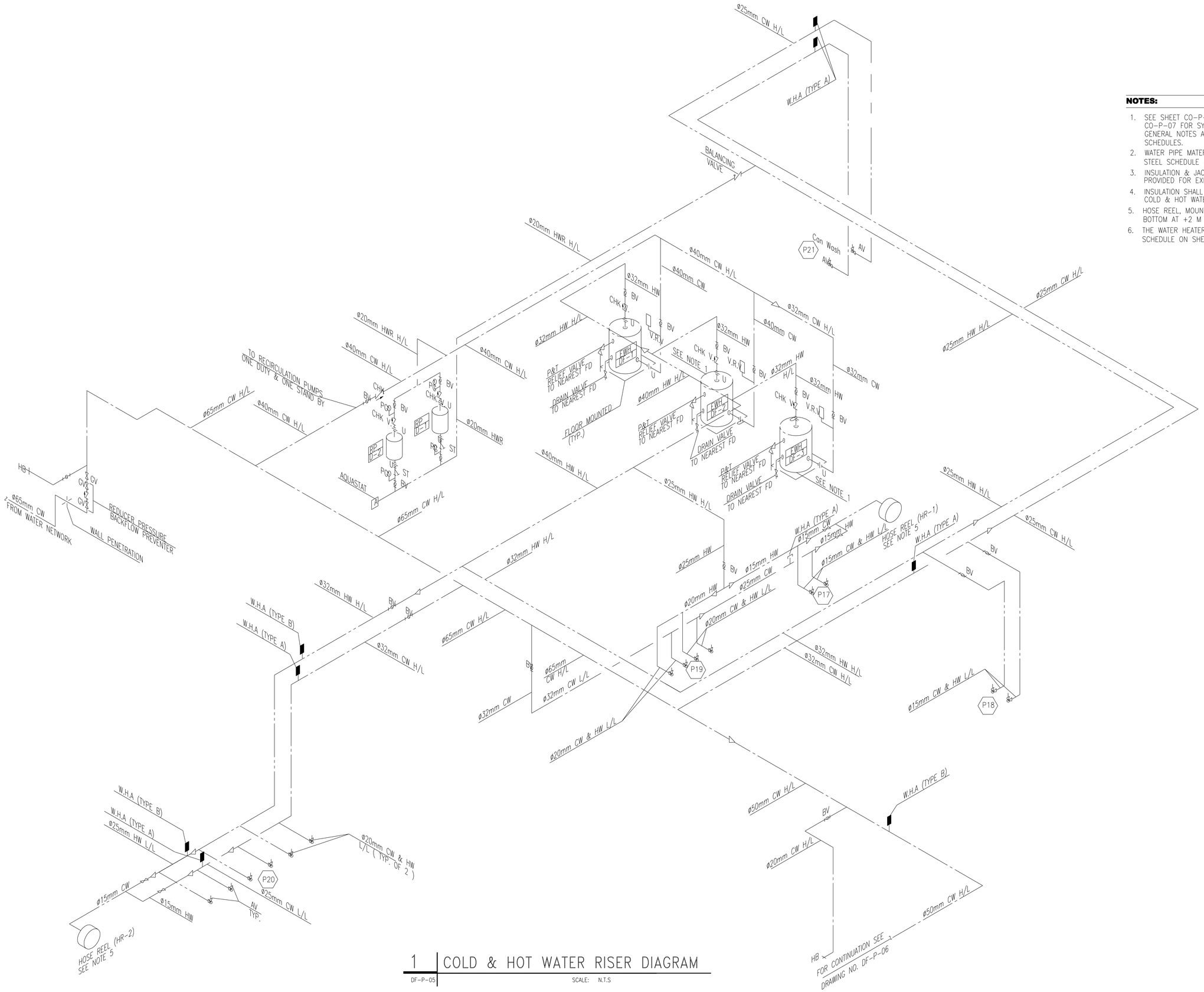

NOTES:

1. SEE SHEET CO-P-01 & CO-P-02 & CO-P-07 FOR SYMBOLS, ABBREVIATIONS, GENERAL NOTES AND EQUIPMENT SCHEDULES.
2. WATER PIPE MATERIAL IS GALVANIZED STEEL SCHEDULE 40 OR CPVC.
3. INSULATION & JACKET SHALL BE PROVIDED FOR EXPOSED WATER PIPES.
4. INSULATION SHALL BE PROVIDED FOR COLD & HOT WATER PIPES.
5. HOSE REEL, MOUNT TO COLUMN, SET BOTTOM AT +2 M ABOVE FLOOR.
6. THE WATER HEATER SCHEDULE AND PUMP SCHEDULE ON SHEET (CO-P-01).

1 COLD & HOT WATER RISER DIAGRAM

DF-P-05

SCALE: N.T.S

SYMBOL	DESCRIPTION	DATE	APR

DESIGNED BY: XXX
DWN BY: XXX
CHK BY: XXX
DATE: 06-27-07
SUBMITTED BY: R. GREWAL
R. SHIELDS/ BLDG SYSTEMS
FILE NO.: AF0707N-DF-P-05

US Army Corps of Engineers Transatlantic Programs Center

ANA REGIONAL BRIGADE
PAKTIKA, AFGHANISTAN

DF AC

COLD, HOT WATER RISER DIAGRAM

SHEET REFERENCE NUMBER:
N
DF-P-05
1 1

$(getvar, "dwgprefix")$(getvar, "dwgname")$(edtime, 0, MON DD", YYYY - H:MMam/pm)

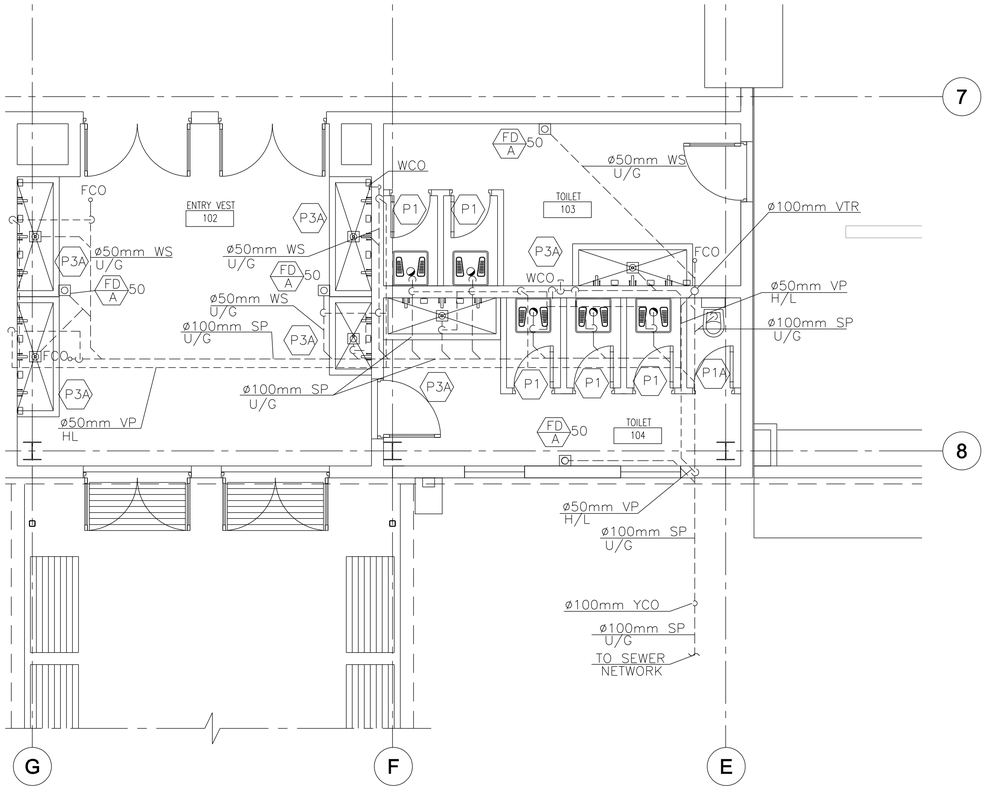

1 DRAINAGE PIPING PLAN

DF-P-06 SCALE: 1:50

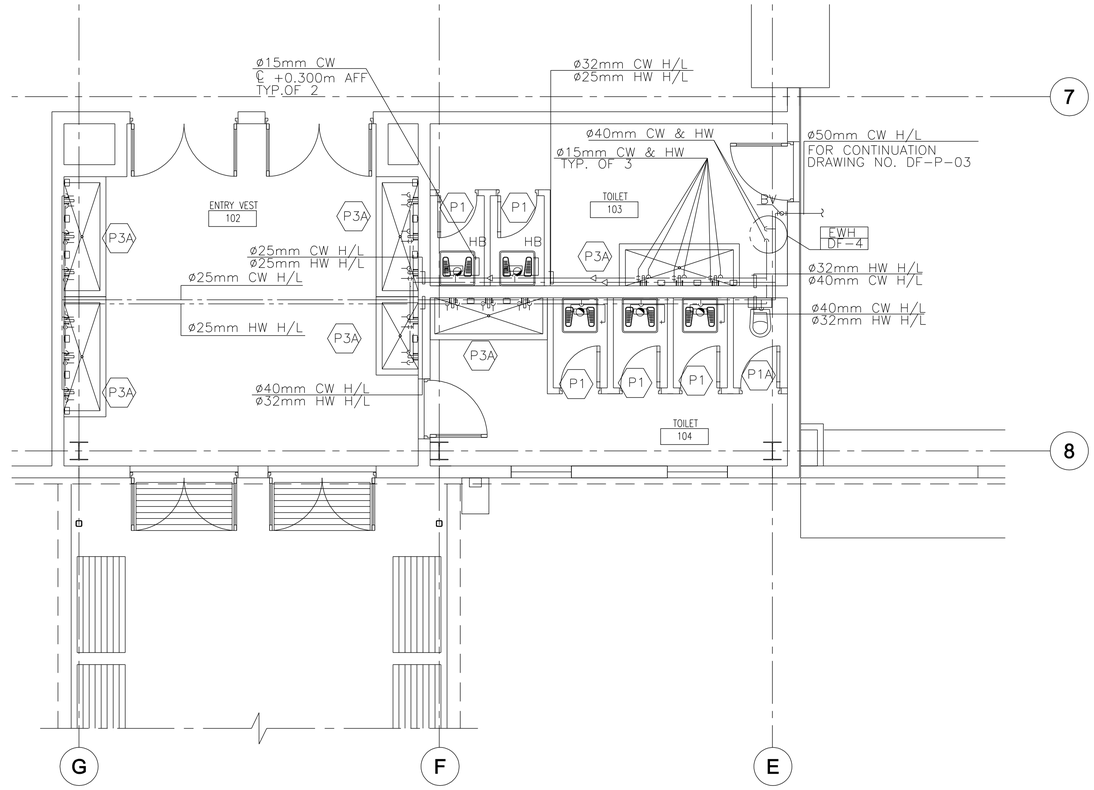

2 COLD & HOT WATER PIPING PLAN

DF-P-06 SCALE: 1:50

NOTES:

1. SEE SHEET CO-P-01 & CO-P-02 & CO-P-07 FOR SYMBOLS, ABBREVIATIONS, GENERAL NOTES AND EQUIPMENT SCHEDULES.
2. WATER PIPE MATERIAL IS GALVANIZED STEEL SCHEDULE 40 OR CPVC.
3. INSULATION & JACKET SHALL BE PROVIDED FOR EXPOSED WATER PIPES.
4. INSULATION SHALL BE PROVIDED FOR COLD & HOT WATER PIPES.
5. FOR DRAINAGE AND WATER SYSTEM RISER DIAGRAM SEE DRAWING NO. DF-P-07.

1 0 1 2 3 4
1:50

SYMBOL	DESCRIPTION	DATE	APR

DESIGNED BY: XXX
DATE: 06-27-07
DWN BY: XXX
SUBMITTED BY: R. CREWAL Chief, PDT Bldg Systems
CHK BY: XXX
FILE NO.: AF0707 N-DF-P-06

US Army Corps of Engineers Transatlantic Programs Center

ANA REGIONAL BRIGADE
PAKTIKA, AFGHANISTAN

DF AC
ENLARGED TOILET
PLUMBING PLAN

SHEET REFERENCE NUMBER:
N
DF-P-06
1 1

$(getvar, "dwgprefix")$(getvar, "dwgname")$(edtime, 0, MON DD", YYYY - HHMMam/pm)

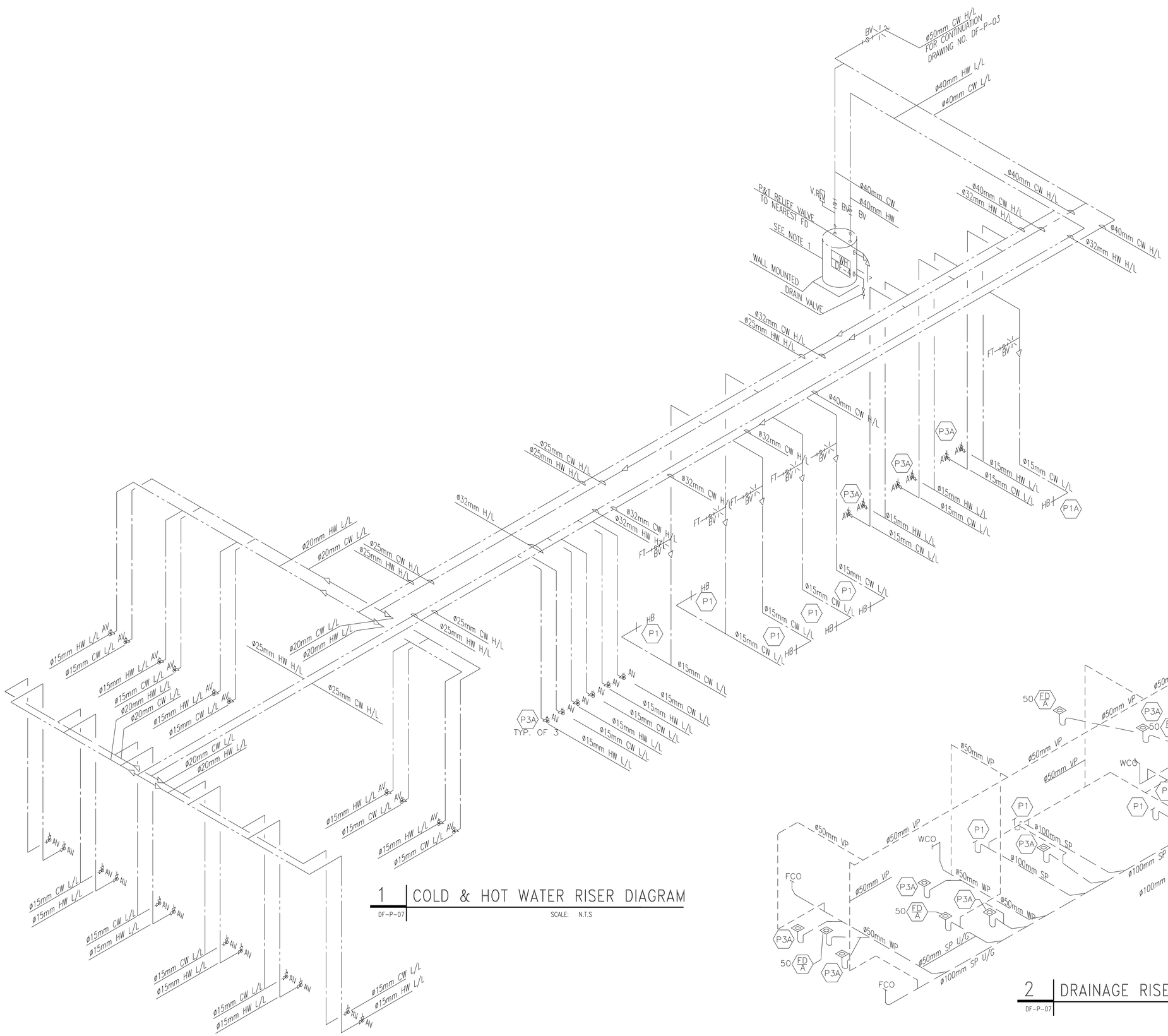

1 COLD & HOT WATER RISER DIAGRAM

DF-P-07

SCALE: N.T.S

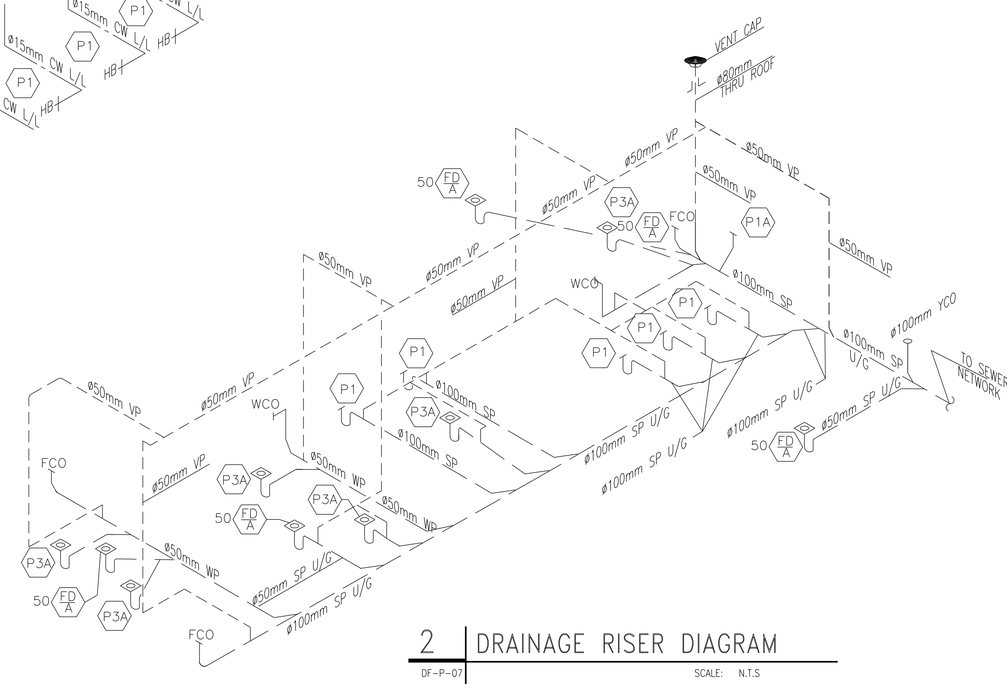

2 DRAINAGE RISER DIAGRAM

DF-P-07

SCALE: N.T.S

NOTES:

1. SEE SHEET CO-P-01 & CO-P-02 & CO-P-07 FOR SYMBOLS, ABBREVIATIONS, GENERAL NOTES AND EQUIPMENT SCHEDULES.
2. WATER PIPE MATERIAL IS GALVANIZED STEEL SCHEDULE 40.
3. INSULATION & JACKET SHALL BE PROVIDED FOR EXPOSED WATER PIPES.
4. INSULATION SHALL BE PROVIDED FOR COLD & HOT WATER PIPES.

SYMBOL	DESCRIPTION	DATE	APR

DESIGNED BY: XXX
DWN BY: XXX
CHK BY: XXX
DATE: 06-27-07
SUBMITTED BY: R. CRERIEWAL CHIEF, PDT BLDG SYSTEMS
FILE NO.: AF0707N-DF-P-07

US Army Corps of Engineers Transatlantic Programs Center

ANA REGIONAL BRIGADE
PAKTIKA, AFGHANISTAN

DFAC
COLD AND HOT WATER RISER DIAGRAM
AND DRAINAGE RISER DIAGRAM

SHEET REFERENCE NUMBER:
N
DF-P-07
1 1

$(getvar, "dwgprefix")$(getvar, "dwgname")$(edtime, O, MON DD", " YYYY - HHMMam/pm)

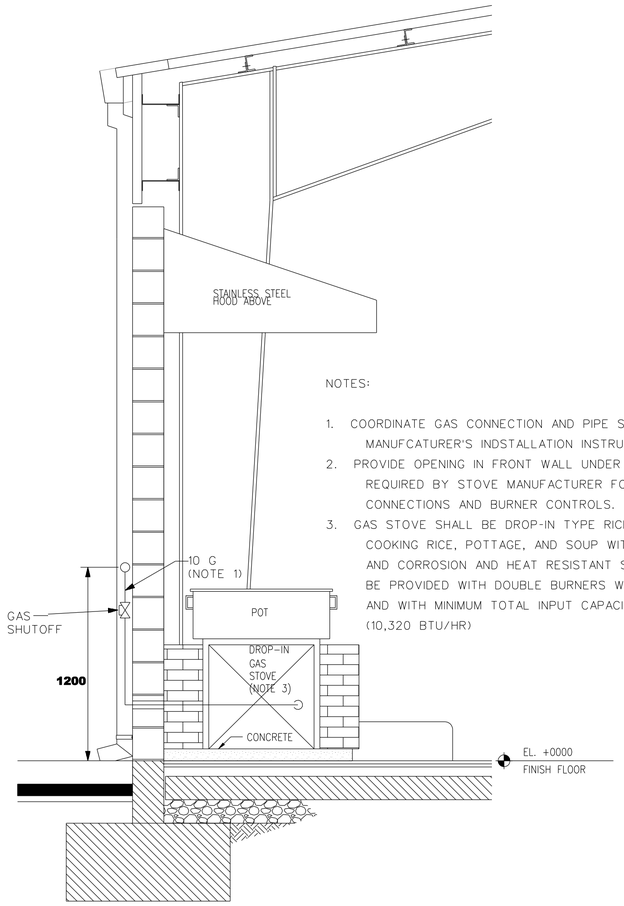

NOTES:

1. COORDINATE GAS CONNECTION AND PIPE SIZE WITH GAS STOVE MANUFCATURER'S INDSTALLATION INSTRUCTIONS.
2. PROVIDE OPENING IN FRONT WALL UNDER THE COUNTER AS REQUIRED BY STOVE MANUFACTURER FOR ACCESS TO GAS CONNECTIONS AND BURNER CONTROLS.
3. GAS STOVE SHALL BE DROP-IN TYPE RICE COOKER SUITABLE FOR COOKING RICE, POTTAGE, AND SOUP WITH CAST IRON BURNERS AND CORROSION AND HEAT RESISTANT STEEL; EACH STOVE SHALL BE PROVIDED WITH DOUBLE BURNERS WITH SEPARATE CONTROLS AND WITH MINIMUM TOTAL INPUT CAPACITY OF 2600 K. CAL/HR (10,320 BTU/HR)

GAS PRESSURE REGULATOR (A) DF-P-08

NOT TO SCALE

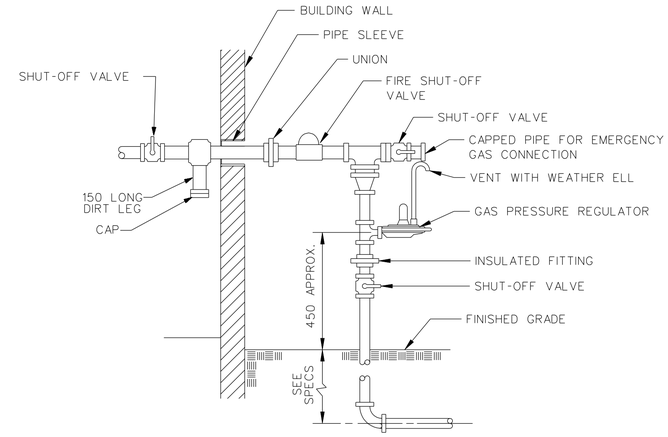

GAS PRESSURE REGULATOR (A) DF-P-08

NOT TO SCALE

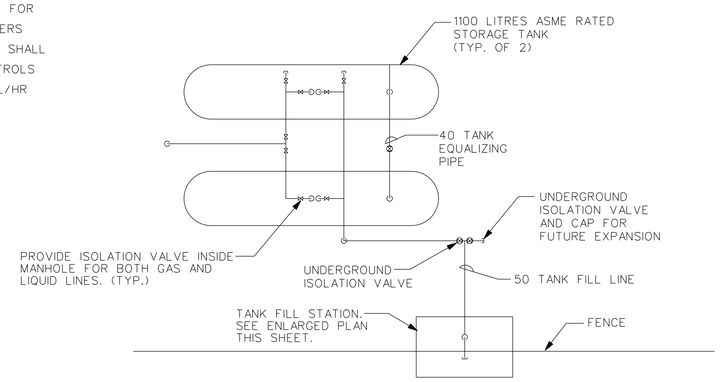

LPG TANK FARM

SCALE 1:50

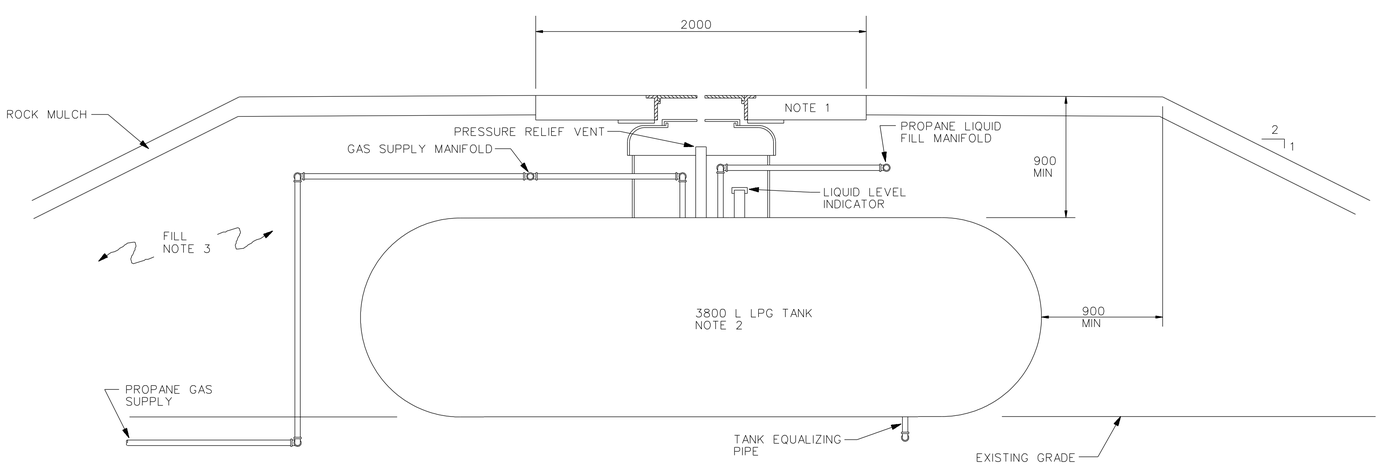

NOTES:

1. TOP OF NEW CONCRETE SLAB WITH PERFORATED MANHOLE COVERS SHALL BE MINIMUM 25 ABOVE FINISHED GRADE.
2. TANK SHALL BE INSTALLED IN STRICT ACCORDANCE WITH MANUFACTURER'S RECOMMENDATIONS, NFPA 58 AND LOCAL REGULATIONS.
3. FILL MATERIAL SHALL BE AS DIMENSIONED ON THIS DRAWING AND OF A SATISFACTORY MATERIAL AS DEFINED IN SPECIFICATION SECTION 02221 WITH A MIN. 100 ROCK MULCH COVER AS DEFINED IN SPECIFICATION SECTION 02950.

UNDERGROUND LPG TANK DETAIL

NOT TO SCALE

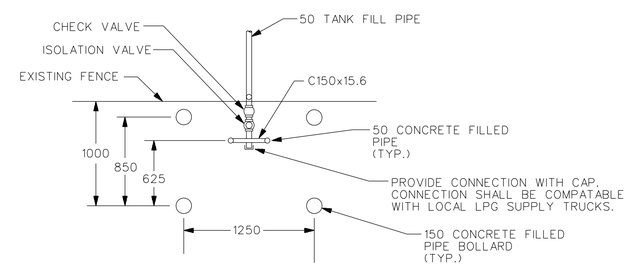

TANK FILL STATION PLAN

SCALE 1:25

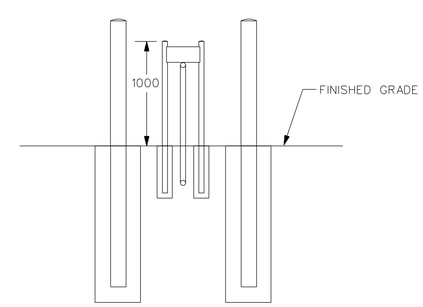

TANK FILL STATION ELEVATION

SCALE 1:25

SYMBOL	DESCRIPTION	DATE	APR

DESIGNED BY: XXX
DATE: 06-27-07
DWN BY: XXX
SUBMITTED BY: R. GREWAL, CHIEF, BLDG SYSTEMS
CHK BY: XXX
FILE NO.: AF0707N-DF-P-08

US Army Corps of Engineers
Transatlantic Programs Center

ANA REGIONAL BRIGADE
PAKTIKA, AFGHANISTAN

DFAC

LP GAS STOVE DETAILS

SHEET REFERENCE NUMBER:
N
DF-P-08
1 1

$(getvar, "dwgprefix")$(getvar, "dwgname")$(edtime, O, MON DD",", YYYY - H:MMam/pm)

DFAC PANEL PP

AIC: 25KA
300AT/400AF MCB
MLO
VOLTAGE 380/220V, 3PH, 5W, 50HZ

FEED TOP
MOUNTING SURFACE
LOCATION ROOM # 115

DESCRIPTION	LOAD (VA) A	B	C	AMP	POLE	CKT	A B C	CKT	POLE	AMP	LOAD (VA) A	B	C	DESCRIPTION
	3000					1		2			3000			
EWH-DF-1		3000		20	3	3		4	3	20		3000		EWH-DF-3
			3000			5		6					3000	
	3000					7		8			2000			
EWH-DF-2		3000		20	3	9		10	3	20		2000		EWH-DF-4
			3000			11		12					2000	
	1350					13		14			4850			
REFRIGERATOR 1		1350		20	3	15		16	3	35		4850		HCU-DF-01
			1350			17		18					4850	
	1350					19		20	1	20				SPARE
REFRIGERATOR 2		1350		20	3	21		22	1	20				SPARE
			1350			23		24	1	20				SPARE
	1350					25		26	1					SPACE
FREEZER		1350		20	3	27		28	1					SPACE
			1350			29		30	1					SPACE
						31		32			19699			
SPARE				20	3	33		34	3	100		20116		PANEL PP1
						35		36					18733	
						37		38			15100			
SPACE						39		40	3	150		16760		PANEL LP1
						41		42					14280	
SUB-TOTALS=	10050	10050	10050								44649	46726	42863	= SUB-TOTALS

	V A	AMPS
TOTAL PHASE A=	54699	248.6
TOTAL PHASE B=	56776	258.07
TOTAL PHASE C=	52913	240.5
TOTAL CONNECTED LOAD	164.4	KVA
DEMAND FACTOR	0.84	
DEMAND LOAD	138.08	KVA
20% FUTURE LOAD	27.6	KVA
TOTAL LOAD	165.7	KVA
TOTAL AMPERE	252.05	AMP

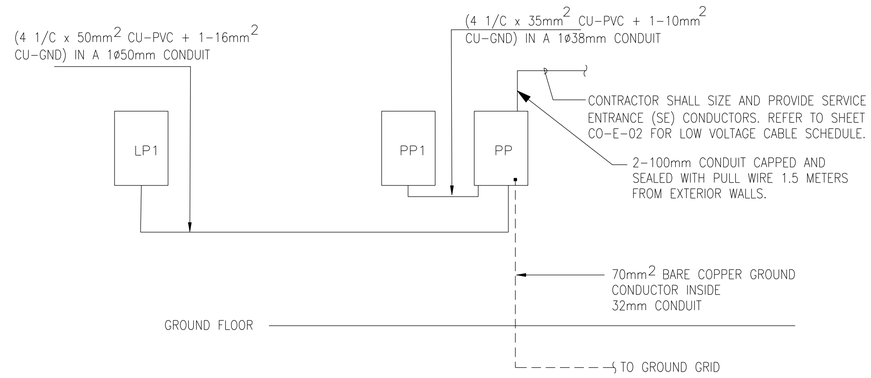

1 POWER RISER DIAGRAM
DF-E-01 SCALE: N.T.S.

DFAC PANEL PP1

AIC: 25KA
100A MCB
MLO
VOLTAGE 380/220V, 3PH, 5W, 50HZ

FEED BOTTOM
MOUNTING FLUSH
LOCATION ROOM # 115

DESCRIPTION	LOAD (VA) A	B	C	AMP	POLE	CKT	A B C	CKT	POLE	AMP	LOAD (VA) A	B	C	DESCRIPTION
EF-DF-01	250			20	1	1		2						
EF-DF-02 & MID		450		20	1	3		4						SPACE
EF-DF-05 & MID			300	20	1	5		6						
	1850					7		8	1	20	100			PR (D-1)
EF-DF-04		1850		20	3	9		10	1	20		100		PR (D-2)
			1850			11		12	1	20			950	SF-DF-02
EF-DF-06	933			20	1	13		14			4000			
EF-DF-07		933		20	1	15		16	3	25		4000		HCU-DF-04
SPARE				20	1	17		18					4000	
EF-DF-08	933			20	1	19		20	1	20				SPARE
EF-DF-09		933		20	1	21		22	1	20		200		MD
SPARE				20	1	23		24					4850	
EF-DF-10	933			20	1	25		26	3	35	4850			HCU-DF-02
SF-DF-01		950		20	1	27		28				4850		
EF-DF-11			933	20	1	29		30					4000	
	1850					31		32	3	25	4000			HCU-DF-03
EF-DF-03		1850		20	3	33		34				4000		
			1850			35		36	1	20				SPARE
SPARE					1	37		38	1	20				SPARE
SPARE					1	39		40	1					SPACE
SPARE					1	41		42	1					SPACE
SUB-TOTALS=	6749	6966	4933								12950	13150	13800	= SUB-TOTALS

	V A	AMPS
TOTAL PHASE A=	19699	89.54
TOTAL PHASE B=	20116	91.44
TOTAL PHASE C=	18733	85.15
TOTAL CONNECTED LOAD	58.55	KVA
DEMAND FACTOR	0.82	
DEMAND LOAD	48	KVA
20% FUTURE LOAD	9.6	KVA
TOTAL LOAD	57.6	KVA
TOTAL AMPERE	87.62	AMP

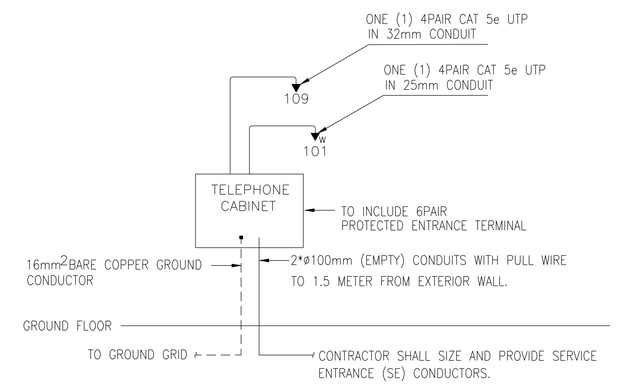

2 TELEPHONE RISER DIAGRAM
DF-E-01 SCALE: N.T.S.

NOTES:

1. SEE SHEET CO-E-01 FOR SYMBOLS, ABBREVIATIONS, AND GENERAL NOTES
2. SEE SHEET CO-E-02 FOR BRANCH CIRCUIT WIRE SCHEDULE.

DRAWING NOT TO SCALE

SYMBOL	DESCRIPTION	DATE	APR

DESIGNED BY: XXX
DWN BY: XXX
CHK BY: XXX
DATE: 06-27-07
SUBMITTED BY: R. CRENWELL, CHIEF, BLDG SYSTEMS
FILE NO.: AF0707N-DF-E-01

US Army Corps of Engineers Transatlantic Programs Center

ANA REGIONAL BRIGADE
PAKTIKA, AFGHANISTAN

DFAC
PANEL SCHEDULES AND RISER DIAGRAMS

SHEET REFERENCE NUMBER:
N
DF-E-01

$(getvar, "dwgprefix")$(getvar, "dwgname")$(edtime, 0, MON DD", " YYYY - HH:MMam/pm)

DFAC PANEL LP1

AIC: 25KA

FEED: BOTTOM

MCB 150A MLO

MOUNTING: FLUSH

LOCATION: ROOM # 115

VOLTAGE 380/220V, 3PH, 5W, 50HZ

DESCRIPTION	LOAD (VA) A	B	C	AMP	POLE	CKT	A B C	CKT	POLE	AMP	LOAD (VA) A	B	C	DESCRIPTION
RM 101 RECP	600			20	1	1		2	1	20	1600			RM 106,109,110,114,115,116 RECP
RM 101 RECP		1800		20	1	3		4	1	20		1400		RM 101, 102, 103, 104, 106 RECP
RM 101 LTG			3000	20	1	5		6	1	20			2250	RM 106, 105 LTG
RM 101 LTG	3000			20	1	7		8	1	20	1200			RM 109, 110 LTG
RM 101 LTG		3000		20	1	9		10	1	20		2000		RM 104 UH-2
SPARE				20	1	11		12	1	20			2250	RM 108,107,109,116 LTG
RM 101 LTG	3000			20	1	13		14	1	20	2000			RM 103 UH-2
RM 101 LTG		3000		20	1	15		16	1	20		2000		RM 116 UH-2
RM 101 LTG			3000	20	1	17		18	1	20			2000	RM 116 UH-2
RM 101 LTG	2000			20	1	19		20	1	20	600			RM 103, 104 LTG
TTC RECEP		180		20	1	21		22	1	20		580		RM 102 LTG
TTC RECEP			180	20	1	23		24	1	20				SPARE
RM 101 FANS	1200			20	1	25		26	1	20				SPARE
RM 101 FANS		1200		20	1	27		28	1	20	1600			FOR FUTURE SELF DETECTOR
RM 101 FANS			1200	20	1	29		30	1	20		1600		FOR FUTURE SELF DETECTOR
TEA BREWING LTG	300			20	1	31		32	1	20				SPARE
SPARE				20	1	33		34	1	20				SPARE
RM 101 FANS			400	20	1	35		36	1	20				SPARE
SPACE					1	37		38	1					SPACE
SPACE					1	39		40	1					SPACE
SPACE					1	41		42	1					SPACE
SUB-TOTALS=	10100	9180	7780								7000	7580	6500	

	V A	AMPS
TOTAL PHASE A=	17100	78
TOTAL PHASE B=	16760	76
TOTAL PHASE C=	14280	65
TOTAL CONNECTED LOAD	48.1	KVA
DEMAND FACTOR	1.0	
DEMAND LOAD	48.1	KVA
20% FUTURE LOAD	9.6	KVA
TOTAL LOAD	57.72	KVA
TOTAL AMPERE	88	AMP

NOTES:

1. SEE SHEET CO-E-01 FOR SYMBOLS, ABBREVIATIONS, AND GENERAL NOTES
2. SEE SHEET CO-E-02 FOR BRANCH CIRCUIT WIRE SCHEDULE.

DRAWING NOT TO SCALE

SYMBOL	DESCRIPTION	DATE	APR

DESIGNED BY: XXX
DWN BY: XXX
CHK BY: XXX
DATE: 06-27-07
SUBMITTED BY: R. CREWAL CHIEF, PDT BLDG SYSTEMS
FILE NO.: AF0707N-DF-E-02

US Army Corps of Engineers Transatlantic Programs Center

ANA REGIONAL BRIGADE
PAKTIKA, AFGHANISTAN

DFAC
PANEL SCHEDULES

SHEET REFERENCE NUMBER:
N
DF-E-02

$(getvar, "dwgprefix")$(getvar, "dwgname")$(edtime, 0, MON DD"," YYYY - HHMMam/pm)

"NOT USED"

NOTES:

1. SEE SHEET CO-E-01 FOR SYMBOLS, ABBREVIATIONS, AND GENERAL NOTES
2. SEE SHEET CO-E-02 FOR BRANCH CIRCUIT WIRE SCHEDULE.

DRAWING NOT TO SCALE

SYMBOL	DESCRIPTION	DATE	APR

DESIGNED BY: XXX	DATE: 06-27-07	
DWN BY: XXX	SUBMITTED BY: R. CREWAL CHIEF, PDT BLDG SYSTEMS	
CHK BY: XXX	FILE NO.: AF0707N-DF-E-03	

US Army Corps of Engineers Transatlantic Programs Center

ANA REGIONAL BRIGADE
PAKTIKA, AFGHANISTAN

DFAC
PANEL SCHEDULE

SHEET REFERENCE NUMBER:
N
DF-E-03

$(getvar, "dwgprefix")$(getvar, "dwgname")$(edtime, 0, MON DD"," YYYY - HHMMam/pm)

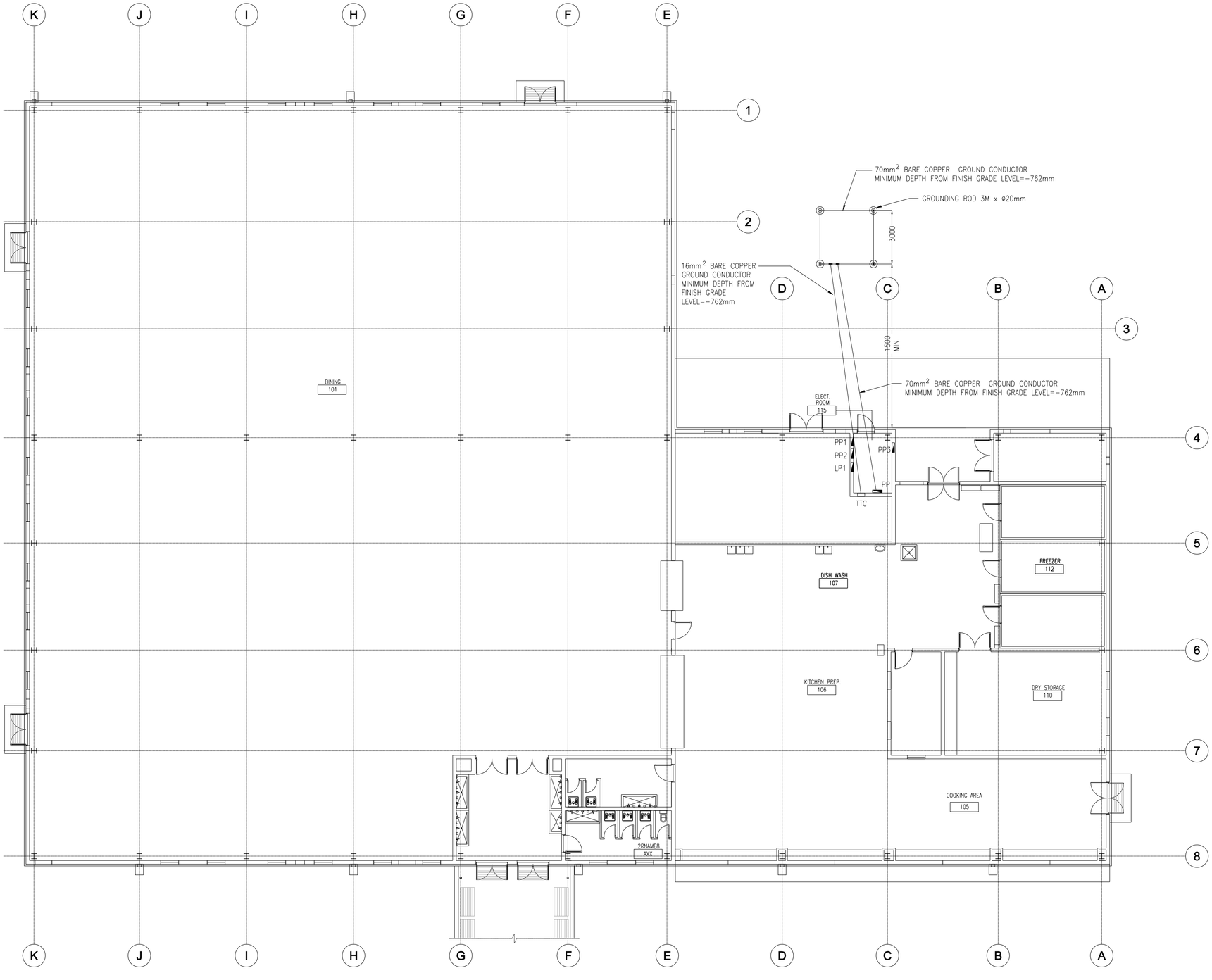

1 GROUNDING PLAN
DF-E-01 SCALE: N.T.S.

NOTES:

1. SEE SHEET CO-E-01 FOR SYMBOLS, ABBREVIATIONS,AND GENERAL NOTES
2. SEE SHEETS CO-E-03 TO CO-E-05 FOR STANDARD DETAILS

SYMBOL	DESCRIPTION	DATE	APR

DESIGNED BY: XXX
DATE: 06-27-07
DWN BY: XXX
SUBMITTED BY: RAVI GREWAL CHIEF, PDT BLDG SYSTEMS
CHK BY: XXX
FILE NO.: AF0707N-DF-E-04

US Army Corps of Engineers Transatlantic Programs Center

ANA REGIONAL BRIGADE
PAKTIKA, AFGHANISTAN

DFAC GROUNDING PLAN

SHEET REFERENCE NUMBER:
N
DF-E-04

6/26/2007
h:\projects\afghanistan\af0707\af0707n\ele\DF-E-04.dwg

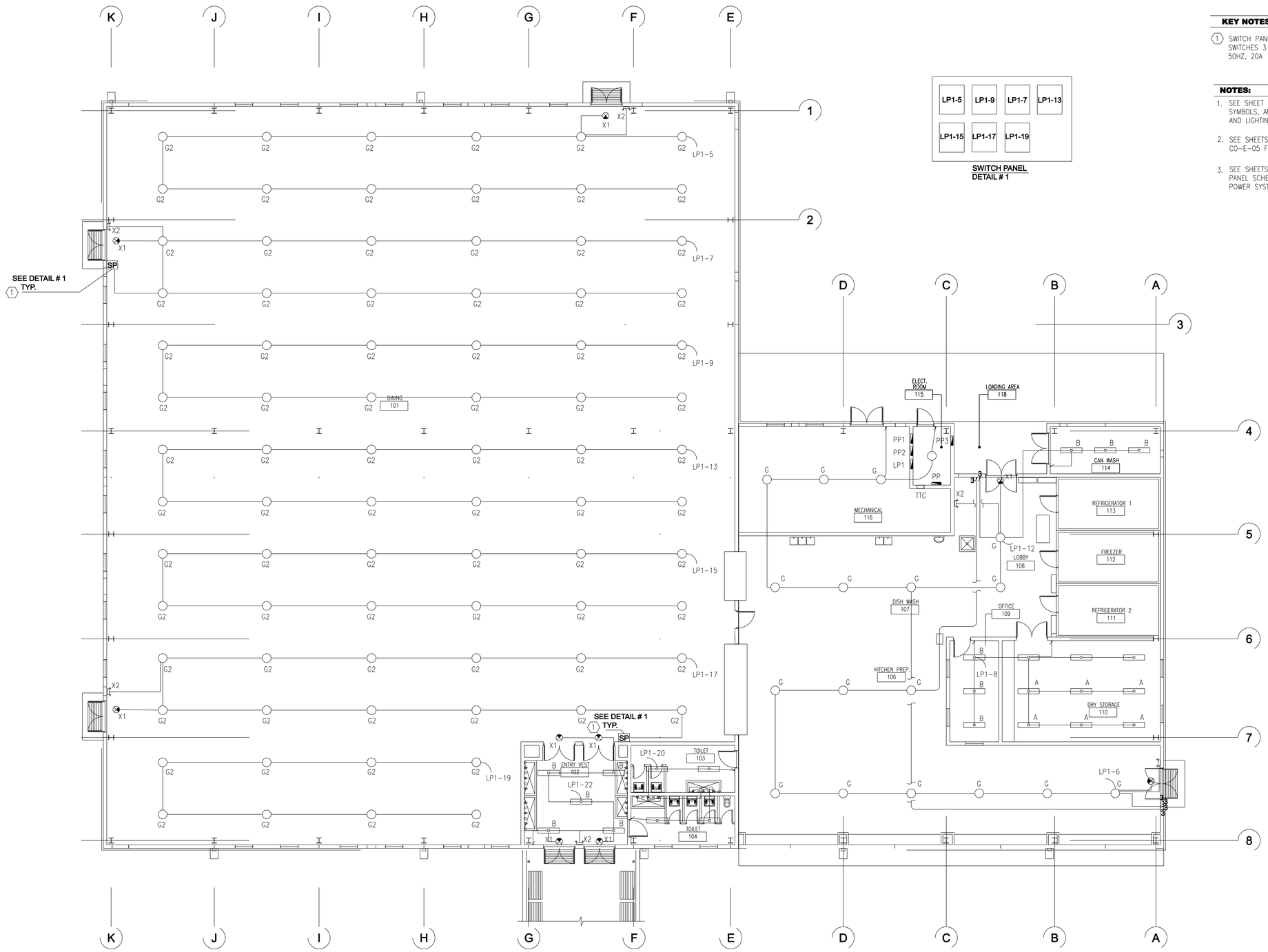

1 LIGHTING PLAN
DF-E-05 SCALE: N.T.S.

SWITCH PANEL
DETAIL # 1

KEY NOTES:

1. SWITCH PANEL CONTAINS 7 SWITCHES 3 WAY, 1 GANG, 220V, 50HZ, 20A

NOTES:

1. SEE SHEET CO-E-01 AND CO-E-02 FOR SYMBOLS, ABBREVIATIONS, GENERAL NOTES AND LIGHTING FIXTURE SCHEDULE.
2. SEE SHEETS CO-E-03 TO CO-E-05 FOR STANDARD DETAILS
3. SEE SHEETS DF-E-01 FOR PANEL SCHEDULE AND RISER DIAGRAMS FOR POWER SYSTEM.

SYMBOL	DESCRIPTION	DATE	APR

DESIGNED BY: XXX
DATE: 06-27-07
DWN BY: XXX
SUBMITTED BY: RAVI GREWAL CHIEF, PDT BLDG SYSTEMS
CHK BY: XXX
FILE NO.: AF0707N-DF-E-05

US Army Corps of Engineers Transatlantic Programs Center

ANA REGIONAL BRIGADE
PAKTIKA, AFGHANISTAN

DFAC
LIGHTING PLAN

SHEET REFERENCE NUMBER:
N
DF-E-05

6/26/2007
h:\projects\afghanistan\af0707\af0707n\ele\DF-E-05.dwg

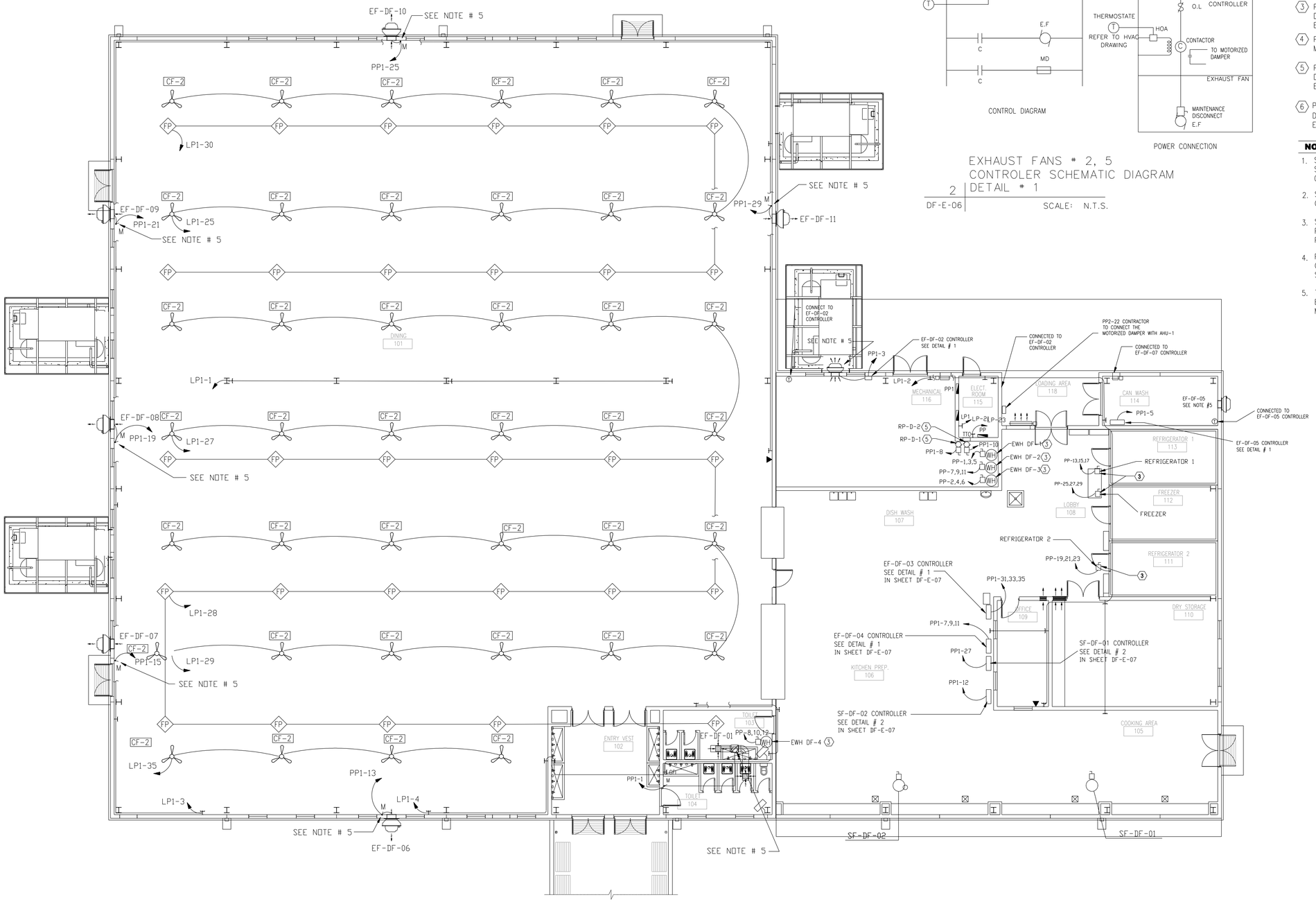

1 POWER PLAN
DF-E-06 SCALE: N.T.S.

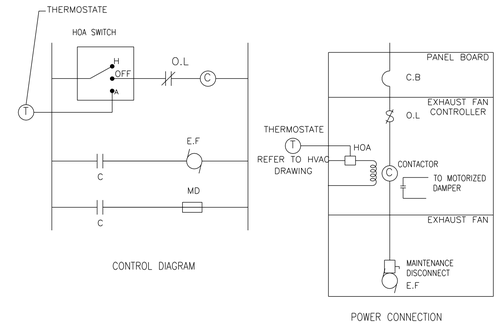

EXHAUST FANS # 2, 5
CONTROLER SCHEMATIC DIAGRAM
2 DETAIL # 1
DF-E-06 SCALE: N.T.S.

KEY NOTS:

1. NOT USED
2. PROVIDE 150A/3P/380V NON-FUSED DISCONNECT SWITCH IN NEMA 1 ENCLOSURE.
3. PROVIDE 30A/3P/380V NON-FUSED DISCONNECT SWITCH IN NEMA 1 ENCLOSURE.
4. PROVIDE 30A/2P/220V COMBINATION MOTOR STARTER IN NEMA 1 ENCLOSURE.
5. PROVIDE 30A/2P/220V NON-FUSED DISCONNECT SWITCH IN NEMA 1 ENCLOSURE.
6. PROVIDE 30A/3P/380V NON-FUSED DISCONNECT SWITCH IN NEMA 1 ENCLOSURE.

NOTES:

1. SEE SHEET CO-E-01 FOR SYMBOLS, ABBREVIATIONS,AND GENERAL NOTES
2. SEE SHEETS CO-E-03 TO CO-E-05 FOR STANDARD DETAILS
3. SEE SHEETS DF-E-01 AND TS-E-02 FOR PANEL SCHEDULE AND RISER DIAGRAMS FOR POWER AND TELEPHONE SYSTEM.
4. PROVIDE FIRE ALARM PULL BOXES, CONDUITS AND WIRING FOR FUTURE SELF SMOKE DETECTOR.
5. THE EXHAUST FAN OR SUPPLY FAN SHALL BE EQUIPED WITH DISCONNECT SWITCH FOR MAINTENANCE.

SYMBOL	DESCRIPTION	DATE	APR

DESIGNED BY: XXX
DATE: 06-27-07
DWN BY: XXX
SUBMITTED BY: RAVI GREWAL CHIEF, PDT BLDG SYSTEMS
CHK BY: XXX
FILE NO.: AF0707 N-DF-E-06

US Army Corps of Engineers Transatlantic Programs Center

ANA REGIONAL BRIGADE
PAKTIKA, AFGHANISTAN

DFAC
POWER PLAN

SHEET REFERENCE NUMBER:
N
DF-E-06

6/26/2007
h:\projects\afghanistan\af0707\af070\n\ele\DF-E-06.dwg

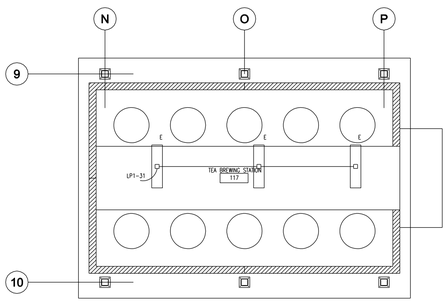

1 | LIGHTING PLAN
DF-E-07 | SCALE: N.T.S.

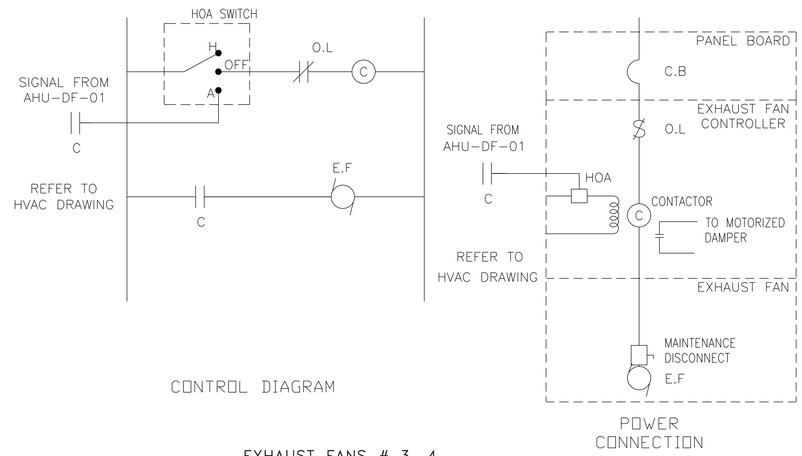

2 | EXHAUST FANS # 3, 4
CONTROLLER SCHEMATIC DIAGRAM
DETAIL #1
DF-E-07 | SCALE: N.T.S.

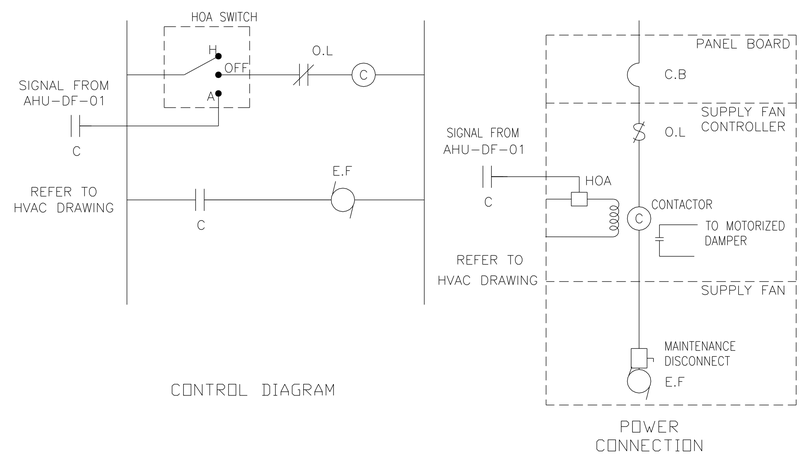

3 | SUPPLY FANS # 1, 2
CONTROLLER SCHEMATIC DIAGRAM
DETAIL #2
DF-E-07 | SCALE: N.T.S.

NOTES:

1. SEE SHEET CO-E-01 AND CO-E-02 FOR SYMBOLS, ABBREVIATIONS, GENERAL NOTES AND LIGHTING FIXTURE SCHEDULE.
2. SEE SHEETS CO-E-03 TO CO-E-05 FOR STANDARD DETAILS
3. SEE SHEETS DF-E-01 FOR PANEL SCHEDULE AND RISER DIAGRAMS FOR POWER SYSTEM.

DRAWING NOT TO SCALE

SYMBOL	DESCRIPTION	DATE	APR

DESIGNED BY: XXX
DWN BY: XXX
CHK BY: XXX
DATE: 06-27-07
SUBMITTED BY: R. CREWAL CHIEF, BLDG SYSTEMS
FILE NO.: AF0707N-DF-E-07

US Army Corps of Engineers Transatlantic Programs Center

ANA REGIONAL BRIGADE
PAKTIKA, AFGHANISTAN

DF AC
TEA BREWING STATION
LIGHTING PLAN

SHEET REFERENCE NUMBER:
N
DF-E-07

$(getvar, "dwgprefix")$(getvar, "dwgname")$(edtime, 0, MON DD,"", YYYY - H:MMam/pm)

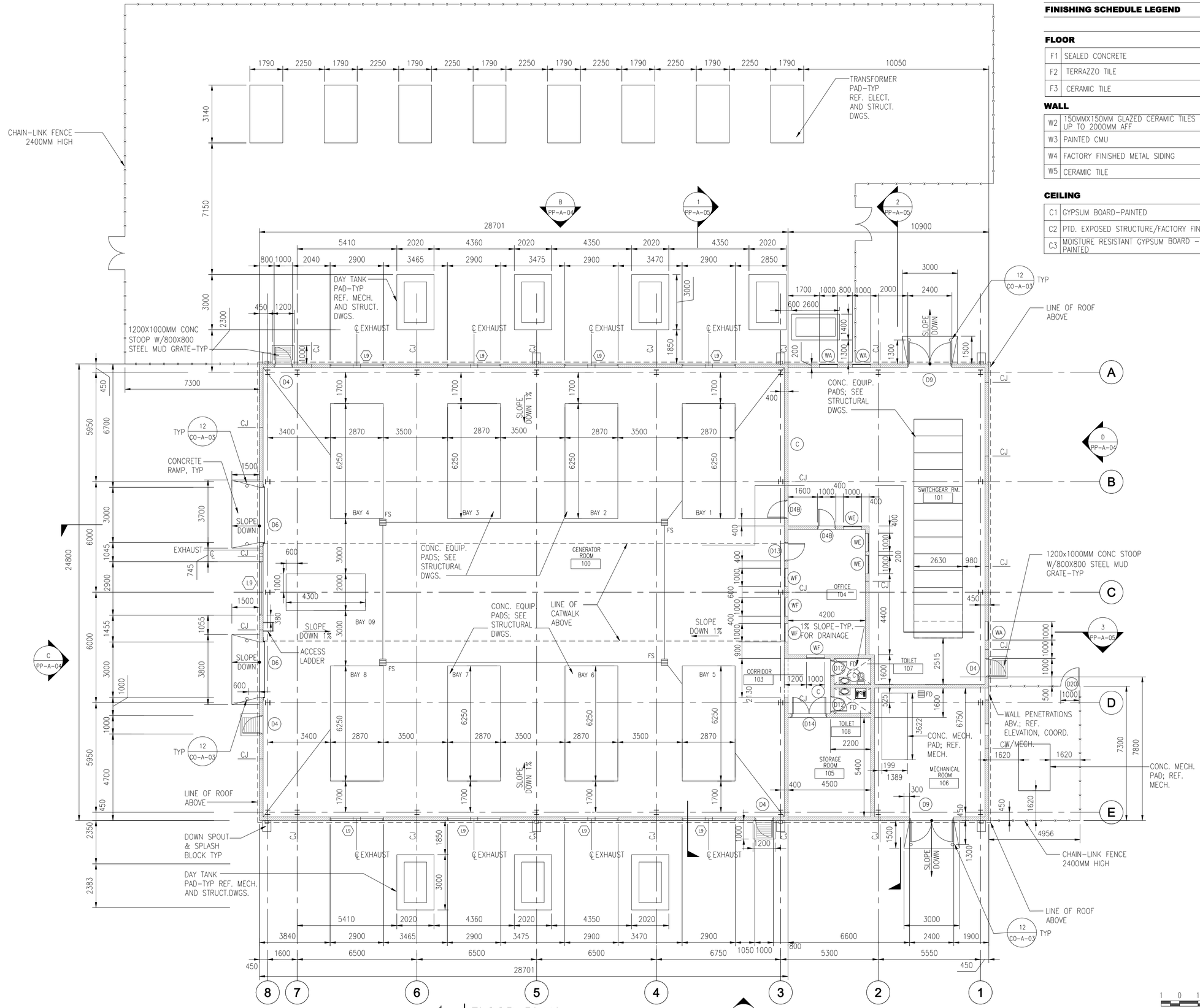

1 FLOOR PLAN

PP-A-01

SCALE: 1:100

FINISHING SCHEDULE LEGEND

FLOOR

F1	SEALED CONCRETE
F2	TERRAZZO TILE
F3	CERAMIC TILE

WALL

W2	150MMX150MM GLAZED CERAMIC TILES UP TO 2000MM AFF
W3	PAINTED CMU
W4	FACTORY FINISHED METAL SIDING
W5	CERAMIC TILE

CEILING

C1	GYPSUM BOARD-PAINTED
C2	PTD. EXPOSED STRUCTURE/FACTORY FIN.
C3	MOISTURE RESISTANT GYPSUM BOARD - PAINTED

FINISHING SCHEDULE

Room No.	Usage	Floor	Wall	Ceiling
100	GENERATOR ROOM	F1	W3/W4	C2
101	SWITCHGEAR ROOM	F1	W3/W4	C2
102	NOT USED			
103	CORRIDOR	F2	W3	C1*
104	OFFICE	F2	W3	C1*
105	STORAGE ROOM	F1	W3/W4	C2
106	MECHANICAL ROOM	F1	W3/W4	C2
107	TOILET	F3	W5	C3*
108	TOILET	F3	W5	C3*

* CEILING SHALL BE HORIZONTAL AT LEVEL 2800mm

WALL SYMBOLS:

CMU WALL

(C) 3000MM HEIGHT CMU WALL

CJ CMU CONTROL JOINT

NOTES:

1- ALL WALLS ARE 200MM CMU UNLESS NOTED OTHERWISE.

2- ALL INTERIOR WALLS TERMINATE AT CEILING UNLESS NOTED OTHERWISE REF. STRUCT. DWGS.

3- ALL DOOR JAMBS ARE 200MM UNLESS NOTED OTHERWISE.

4- ALL DIMENSIONS ARE TO FACE OF CMU UNLESS NOTED OTHERWISE.

5- ALL VERTICAL DIMENSIONS & LEVELS ARE FROM GROUND FLOOR FINISHED SLAB. THIS ELEVATION IS +0000.

6- SEE DRAWING CO-A-05 & CO-A-06 FOR OPENING SCHEDULE & TYPES.

7- SEE DRAWING CO-A-02, CO-A-03 & CO-A-04 FOR STANDARD DETAILS.

8- SEE STRUCTURAL DRAWINGS FOR LOCATION OF BUILDING CONTROL, EXPANSION AND SEISMIC JOINTS.

9- SEE DRAWING SW-C905 FOR CHAINLINK FENCE DETAILS & GATES.

10- SEE CIVIL DRAWINGS FOR BUILDING LOCATION.

11- TOTAL AREA OF BUILDING IS 982 M2.

NOTE:

ORIENT BUILDNG ON SITE SUCH THAT TOILETS ARE ON A NORTH/SOUTH ACCESS.

SYMBOL	DESCRIPTION	DATE	APR

DESIGNED BY: YSK
DWN BY: JSG
CHK BY: PLD
DATE: 06-27-07
SUBMITTED BY: CHIEF, PANELLO PROJECTS DEV
FILE NO.: AF0707 O-PP-A-01

US Army Corps of Engineers Transatlantic Programs Center

ANA REGIONAL BRIGADE
PAKTIKA, AFGHANISTAN

POWER PLANT
FLOOR PLAN

SHEET REFERENCE NUMBER:
PP-A-01

NOTES:

1- SEE SHEET PP-A-01 FOR FINISH SCHEDULE.

2- SEE SHEET CO-E-01 FOR LIGHTING LEGEND.

3- SEE SHEET CO-M-06 FOR MECHANICAL LEGEND.

4- ALL HVAC OPENINGS DIMENSION SHALL BE VERIFIED WITH APPROVED SUBMITTALS.

5- SEE SHEET PP-E-02 FOR EXIT SIGN LOCATIONS.

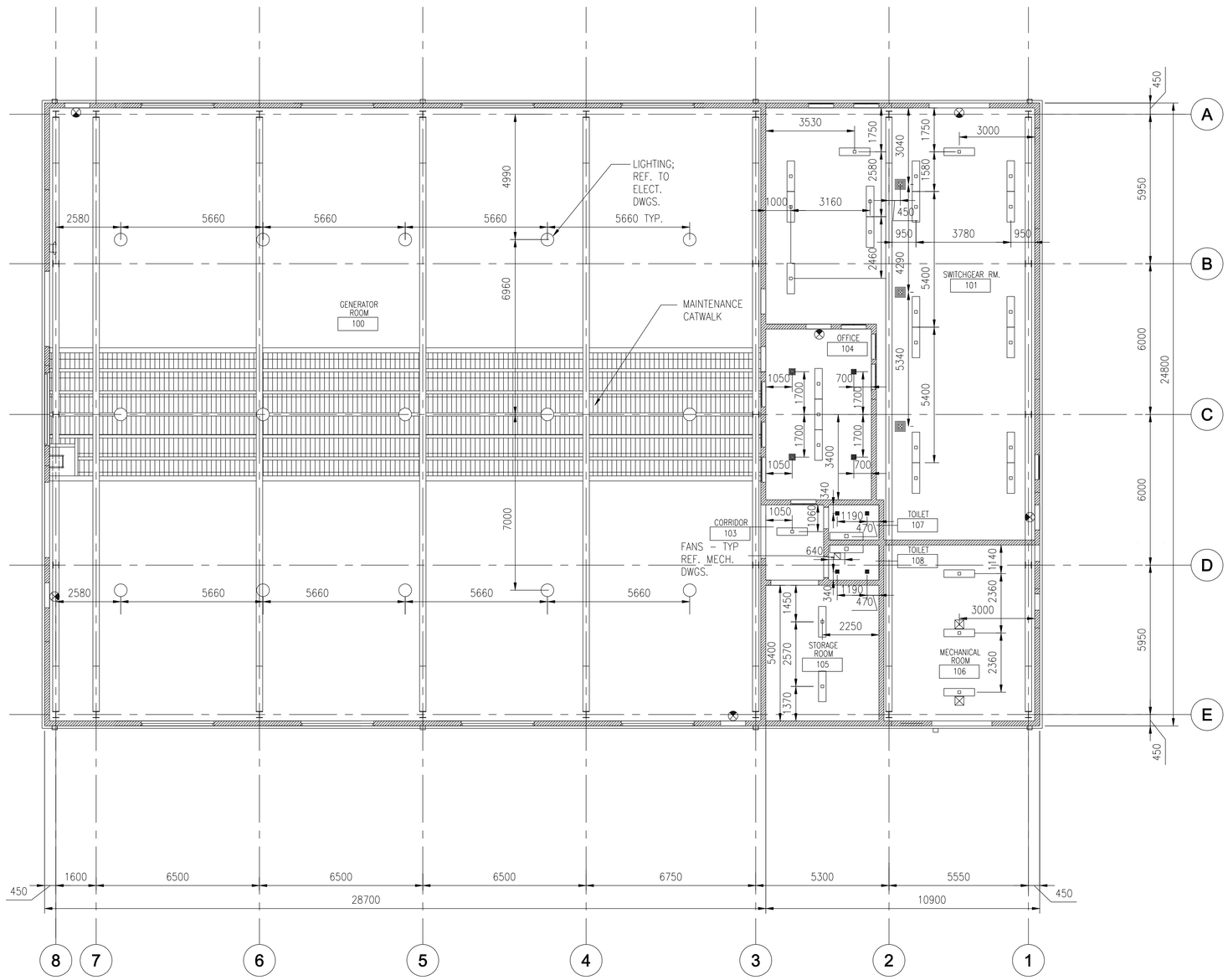

1 REFLECTED CEILING PLAN
PP-A-02
SCALE: 1:100

1:100

SYMBOL	DESCRIPTION	DATE	APR

DESIGNED BY: YSK
DWN BY: JSG
CHK BY: PLD
DATE: 06-27-07
SUBMITTED BY: PAUL D. PANELLO, CHIEF, PDC/TLS DEV
FILE NO.: AF0707 0-PP-A-02

US Army Corps of Engineers Transatlantic Programs Center

ANA REGIONAL BRIGADE
PAKTIKA, AFGHANISTAN

POWER PLANT

REFLECTED CEILING PLAN

SHEET REFERENCE NUMBER:
PP-A-02

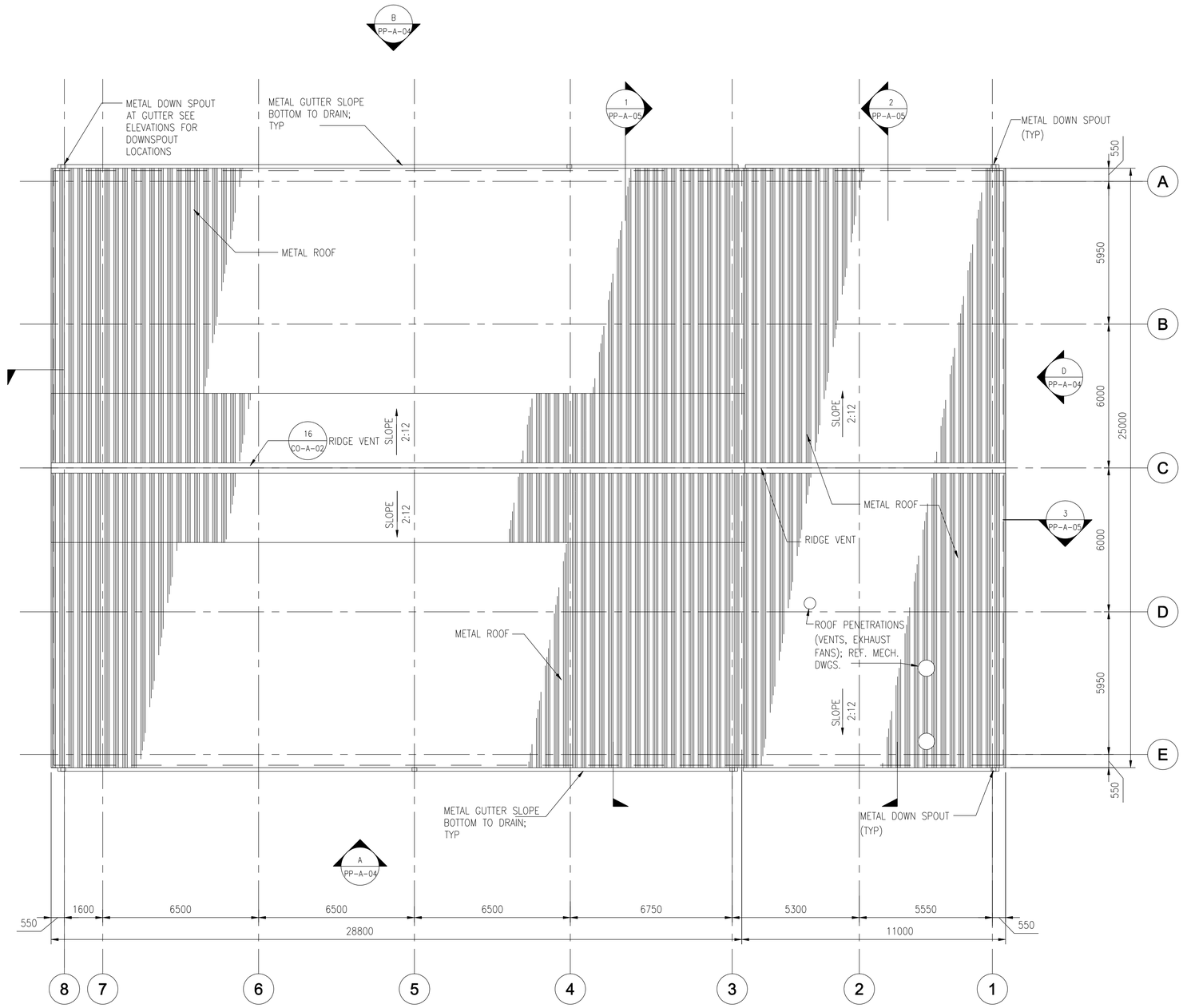

1 ROOF PLAN

PP-A-03

SCALE: 1:100

1 0 1 2 3 4 5 6 7 8 9
1:100

SYMBOL	DESCRIPTION	DATE	APR

DESIGNED BY: YSK
DWN BY: JSG
CHK BY: PLD
DATE: 06-27-07
SUBMITTED BY: CHIEF, PANELLO PROJ MGT PACIFICS DEV
FILE NO.: AF0707 0-PP-A-03

US Army Corps of Engineers Transatlantic Programs Center

ANA REGIONAL BRIGADE
PAKTIKA, AFGHANISTAN

POWER PLANT
ROOF PLAN

SHEET REFERENCE NUMBER:
PP-A-03

$(getvar, "dwgprefix")$(getvar, "dwgname")$(edtime, O, MON DD", YYYY - HHMMam/pm)

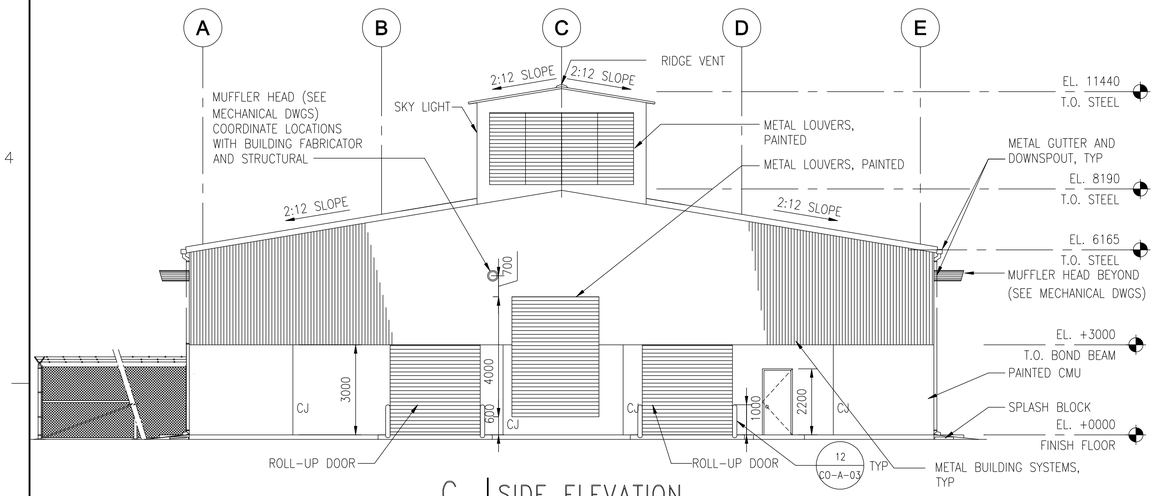

C | SIDE ELEVATION

PP-A-04 REF. PP-A-01 SCALE: 1:100

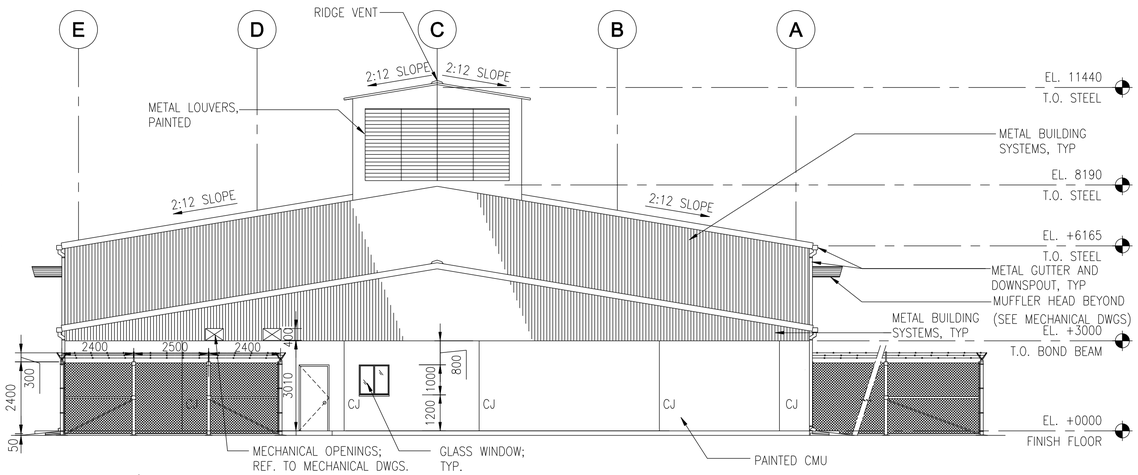

D | SIDE ELEVATION

PP-A-04 REF. PP-A-01 SCALE: 1:100

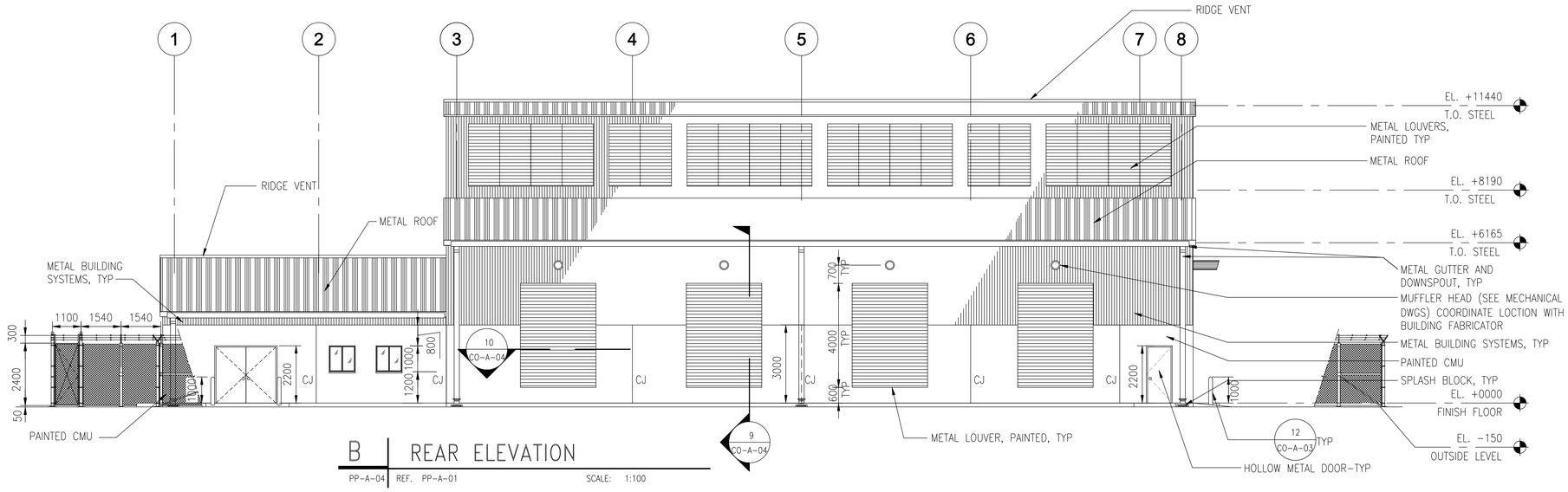

B | REAR ELEVATION

PP-A-04 REF. PP-A-01 SCALE: 1:100

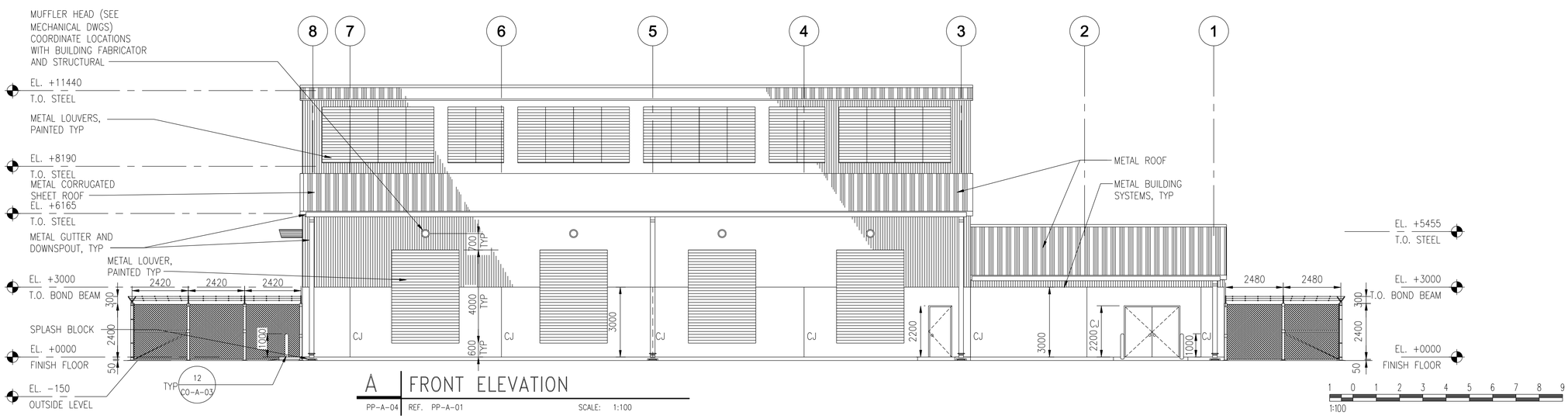

A | FRONT ELEVATION

PP-A-04 REF. PP-A-01 SCALE: 1:100

SYMBOL	DESCRIPTION	DATE	APR

DESIGNED BY: YSK
DATE: 06-27-07
DWN BY: JSG
SUBMITTED BY: PHILIP D. PANELLO
CHK BY: PLD
FILE NO.: AF0707 O-PP-A-04

US Army Corps of Engineers Transatlantic Programs Center

ANA REGIONAL BRIGADE
PAKTIKA, AFGHANISTAN

POWER PLANT

EXTERIOR ELEVATIONS

SHEET REFERENCE NUMBER:
PP-A-04

$(getvar, "dwgprefix")$(getvar, "dwgname")$(edtime, 0, MON DD"", "YYYY - HHMMam/pm)

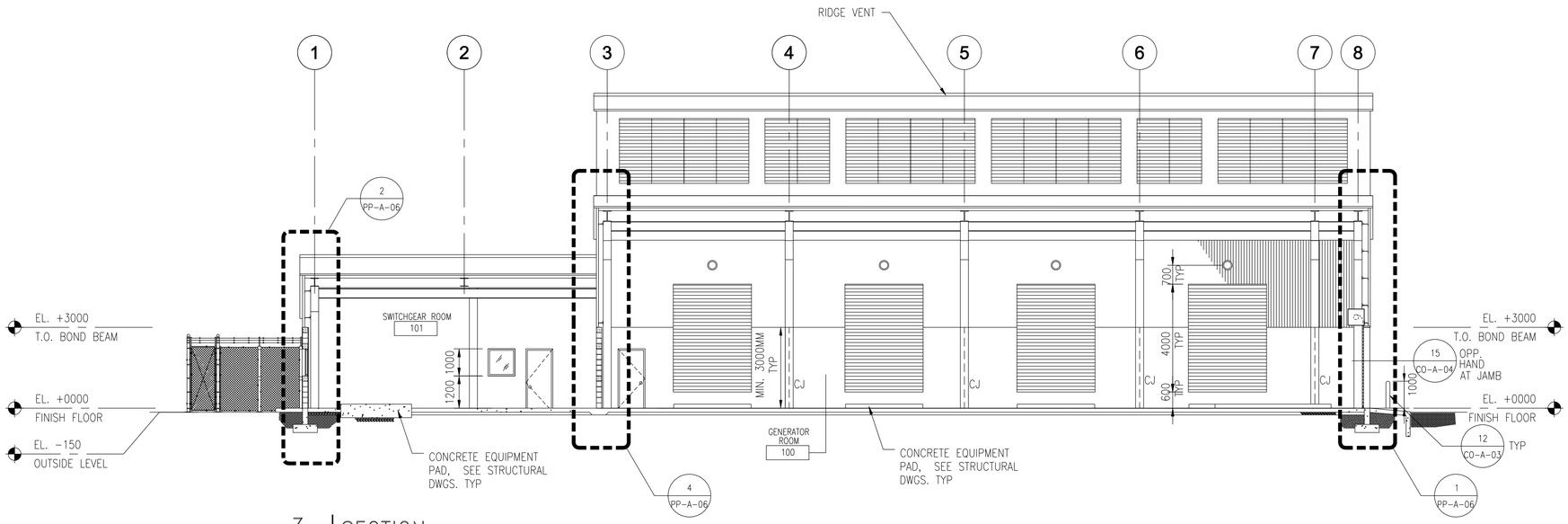

3 SECTION

PP-A-05 REF. PP-A-01 SCALE: 1:100

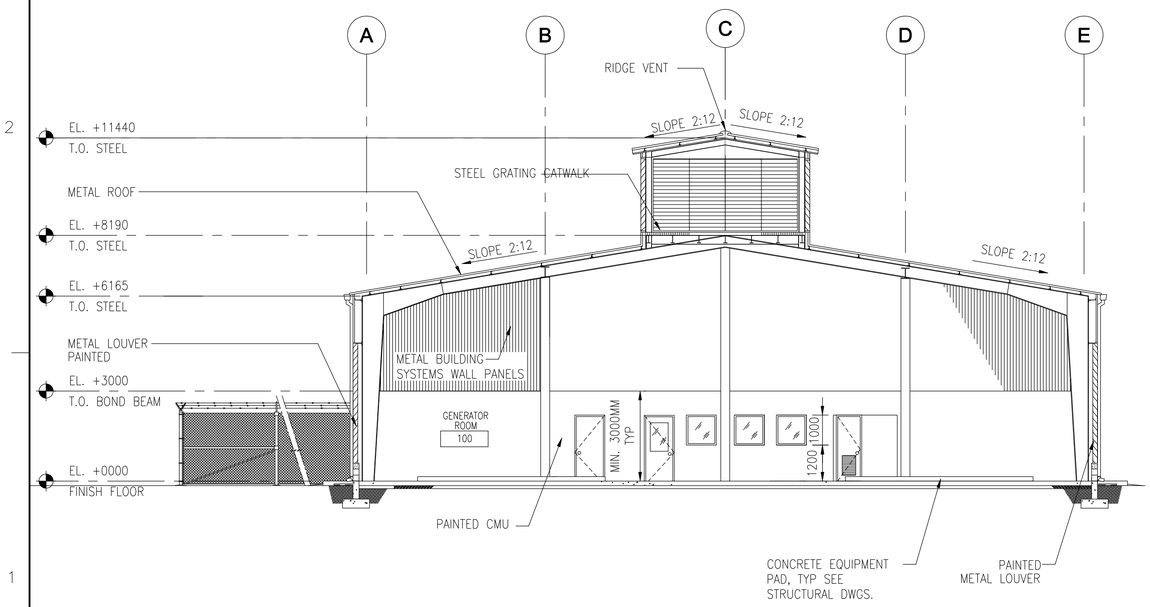

1 SECTION

PP-A-05 REF. PP-A-01 SCALE: 1:100

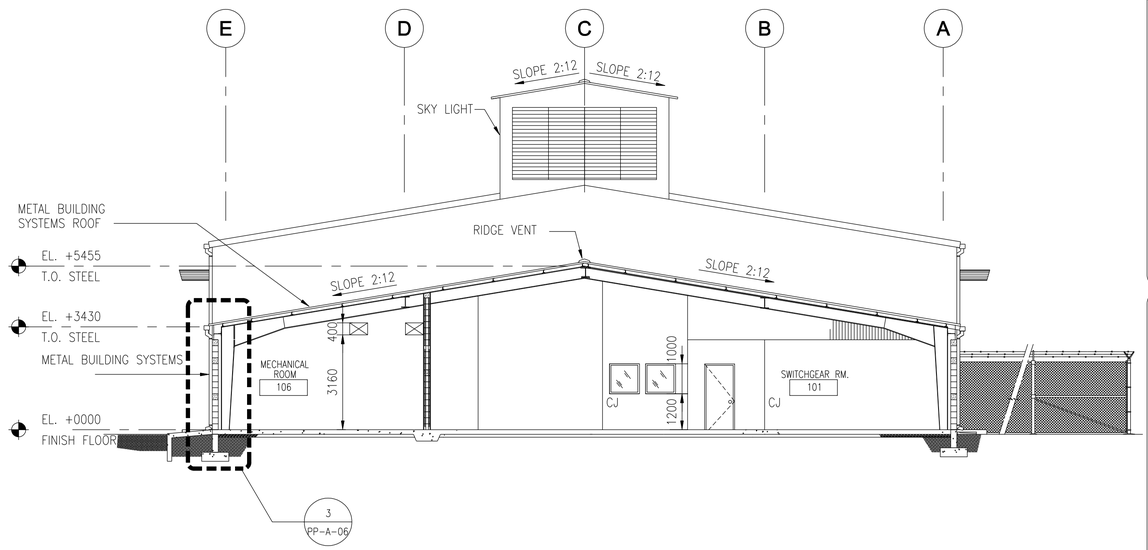

2 SECTION

PP-A-05 REF. PP-A-01 SCALE: 1:100

1 0 1 2 3 4 5 6 7 8 9
1:100

SYMBOL	DESCRIPTION	DATE	APR

DESIGNED BY: YSK
DATE: 06-27-07
DWN BY: JSG
SUBMITTED BY: PHILIP J. PANELLO CHIEF, PROJECT FACILITIES DEV
CHK BY: PLD
FILE NO.: AF0707 0-PP-A-05

US Army Corps of Engineers
Transatlantic Programs Center

ANA REGIONAL BRIGADE
PAKTIKA, AFGHANISTAN

POWER PLANT
BUILDING SECTIONS

SHEET REFERENCE NUMBER:
PP-A-05

$(getvar, "dwgprefix")$(getvar, "dwgname")$(edtime, O, MON DD",", YYYY - H:MMam/pm)

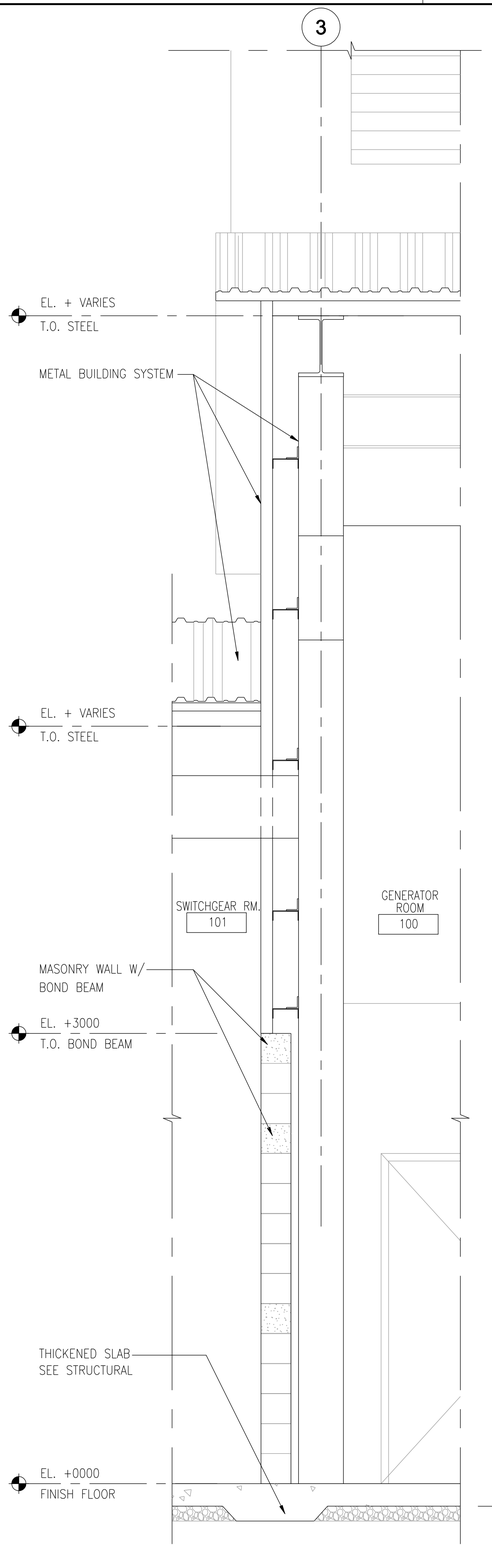

4 WALL SECTION

PP-A-06 REF. PP-A-05 SCALE: 1:20

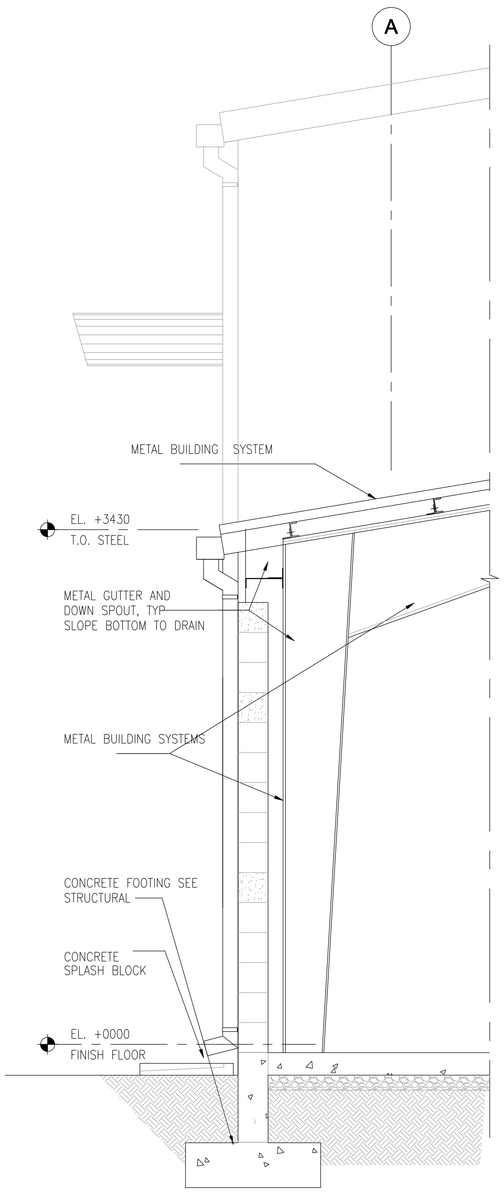

3 WALL SECTION

PP-A-06 REF. PP-A-05 SCALE: 1:20

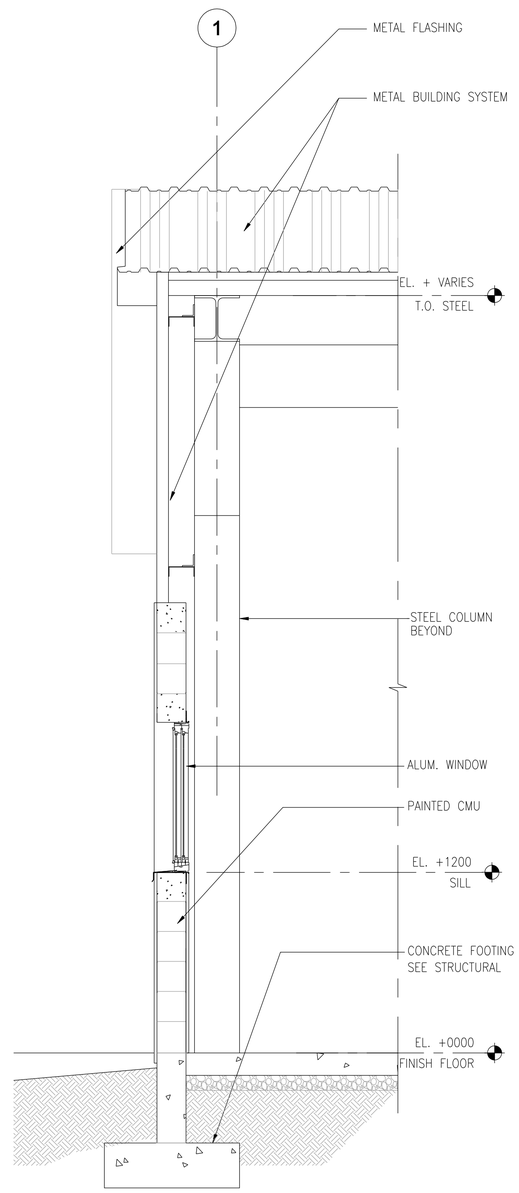

2 WALL SECTION

PP-A-06 REF. PP-A-05 SCALE: 1:20

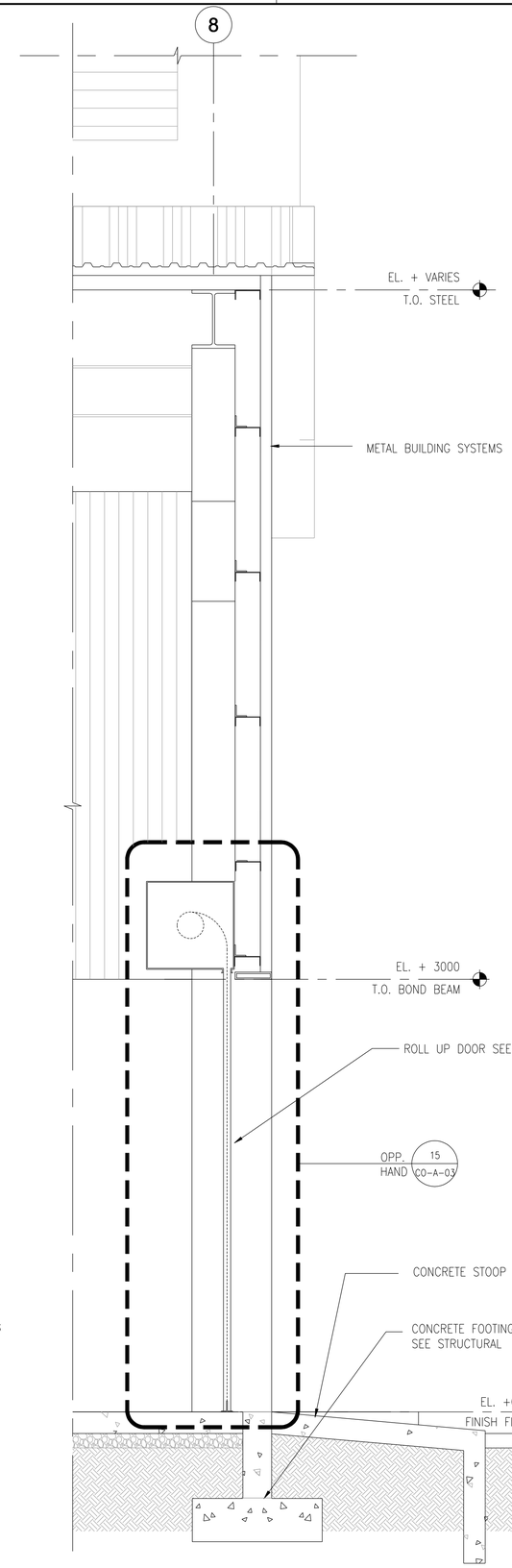

1 WALL SECTION

PP-A-06 REF. PP-A-05 SCALE: 1:20

1 .50 0 1

1:20

SYMBOL	DESCRIPTION	DATE	APR

DESIGNED BY: YSK
DWN BY: JSG
CHK BY: PLD
DATE: 06-27-07
SUBMITTED BY: PHILIP J. PINELLO CHIEF, PROJECTS DEV
FILE NO.: AF0707 0-PP-A-06

US Army Corps of Engineers Transatlantic Programs Center

ANA REGIONAL BRIGADE
PAKTIKA, AFGHANISTAN

POWER PLANT

BUILDING WALL SECTIONS

SHEET REFERENCE NUMBER:
PP-A-06

$(getvar, "dwgprefix")$(getvar, "dwgname")$(edtime, 0, MON DD",", YYYY - H:MMam/pm)

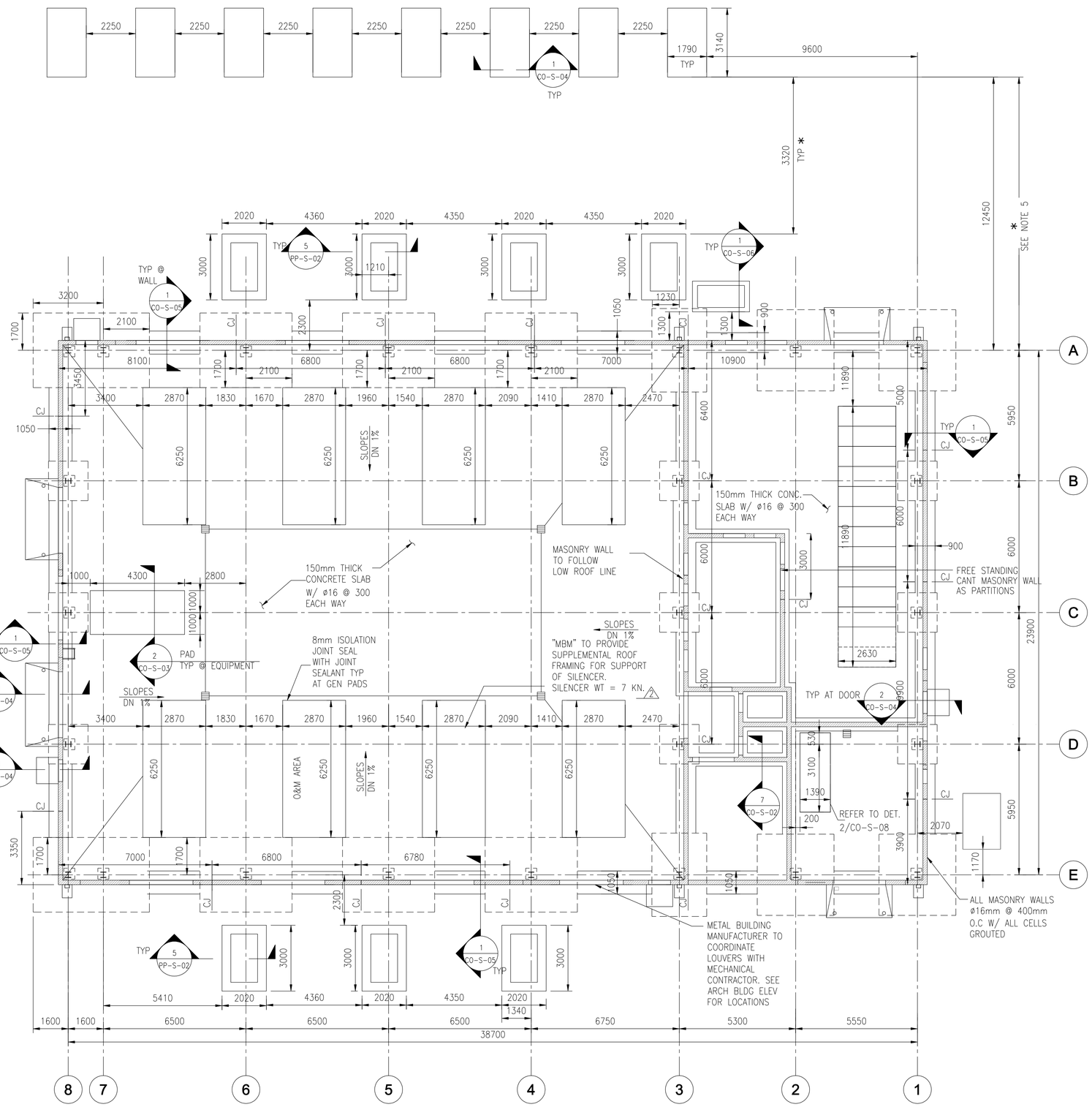

1 FOUNDATION PLAN

PP-S-01 SCALE: 1:100

NOTES:

1. OUT-TO-OUT BUILDING DIMENSIONS SHOWN ARE MINIMUMS. THE CONTRACTOR SHALL COORDINATE COLUMN (METAL BLDG), BASE PLATE (GROUT, IF ANY), ANCHOR BOLTS AND CONCRETE MAT SLAB DIMENSIONS TO SUIT "METAL BUILDING SYSTEM" SELECTED.

2. CONTRACTOR SHALL DESIGN THE FOUNDATIONS TO SUPPORT THE METAL BUILDING SYSTEM AND THE EXTERIOR 3.0 METER HIGH SKIRT WALL

3. REFER TO ARCHITECTURAL DRAWINGS FOR BUILDING SIZE AND OTHER REQUIREMENTS. PRE-ENGINEERED BUILDING SHALL CONFORM TO THE REQUIREMENTS OF THE METAL BUILDING MANUFACTURER ASSOCIATION - MBMA.

4. DESIGN LOADS (SERVICE)

LOADS:

ROOF = 98 KG/SQ. M (20 PSF)
FLOOR = 1225 KG/SQ. M (250 PSF)

FORKLIFT: AXLE LOAD CAPACITY OF 2722 Kg (6000 LBS)

WIND VELOCITY 125 KPH, EXPOSURE C AND IMPORTANCE FACTOR I=1.0.

EARTHQUAKE:

SEISMICITY: S_S=1.65g AND S_1=0.75g USE GROUP I, SITE CLASS D, IMPORTANCE FACTOR I=1.0.

5. MATERIALS:

CONCRETE: 28 MPa CYLINDER STRENGTH AT 28 DAYS
REINFORCING: ASTM A615 GRADE 60
WELDED WIRE FABRIC: ASTM A185

6. FOR CJ AND CJT DETAILS SEE GENERAL DETAILS.

7. ALLOWABLE SOIL BEARING CAPACITY 4900 KSM (1000 PSF).

8. FOUNDATIONS ARE DESIGNED USING AN ALLOWABLE BEARING PRESSURE OF 0.75 KG/SQ. CM (1500 PSF), AND BOTTOM OF FOOTINGS ARE PLACED AS SHOWN ON DRAWINGS. GEOTECHNICAL INVESTIGATION SHALL CONFIRM BEARING CAPACITY TO BE NO LESS THAN 0.75 KG/SQ CM. IF GEOTECHNICAL INVESTIGATION SHOWS LESS THAN 0.75 KG/SQ CM THE CONTRACTOR SHALL REDESIGN FOOTINGS BASED ON THE GEOTECHNICAL INVESTIGATION. SEE SPECIFICATION 01015 PARAGRAPH, GEOTECHNICAL, FOUNDATION AND SURVEY.

SYMBOL	DESCRIPTION	DATE	APR

DESIGNED BY: TCP
DWN BY: TCP
CHK BY: KGO
DATE: 06-27-07
SUBMITTED BY: CHIEF, PANELIO PDT PANELIO DEV
FILE NO.: AF0707 0-PP-S-01

US Army Corps of Engineers Transatlantic Programs Center

ANA REGIONAL BRIGADE
PAKTIKA, AFGHANISTAN

POWER PLANT
FOUNDATION PLAN

SHEET REFERENCE NUMBER:
PP-S-01

1:100

$(getvar, "dwgprefix")$(getvar, "dwgname")$(edtime, 0, MON DD"","" YYYY - H:MMam/pm)

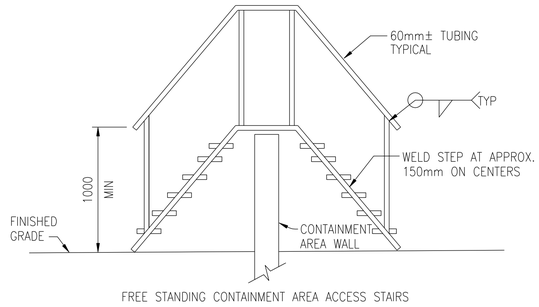

4 ACCESS STAIR

PP-S-02 SCALE : N.T.S

NOTE:
THE UTILITY TRENCH COVER SHALL BE REMOVABLE FOR ITS ENTIRE LENGTH.
650x650 ACCESS COVERS SHALL BE AT 4M INTERVALS FOR VISUAL INSPECTION.

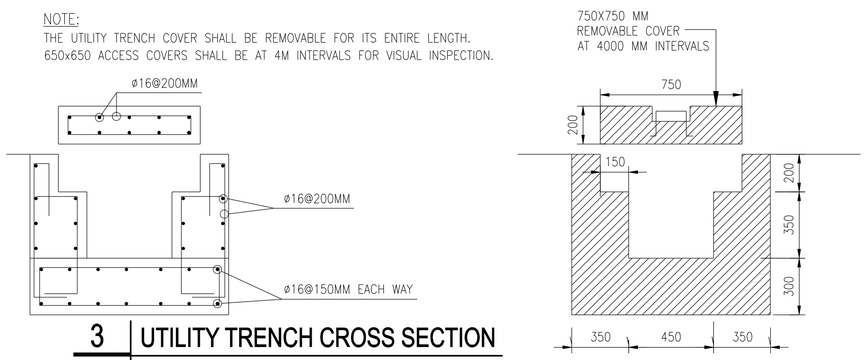

3 UTILITY TRENCH CROSS SECTION

PP-S-02 REF : PP-S-01 SCALE : N.T.S

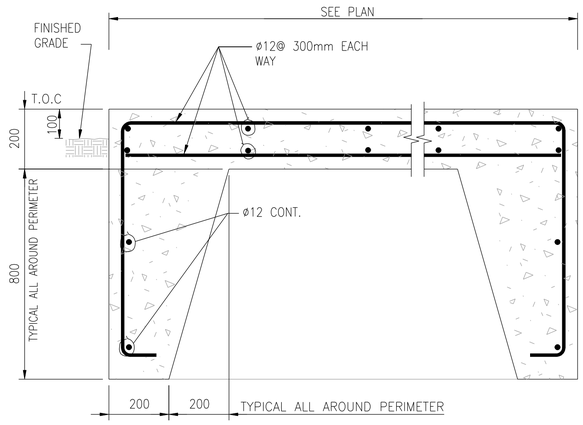

NOTE:
PAD DIMENSIONS, ANCHOR BOLT SIZE AND LOCATIONS, AND OTHER EMBEDDED ITEMS SHALL CONFORM TO EQUIPMENT MANUFACTURER'S REQUIREMENTS.

5 EQUIPMENT PAD DETAIL

PP-S-02 REF. PP-S-01 SCALE : N.T.S

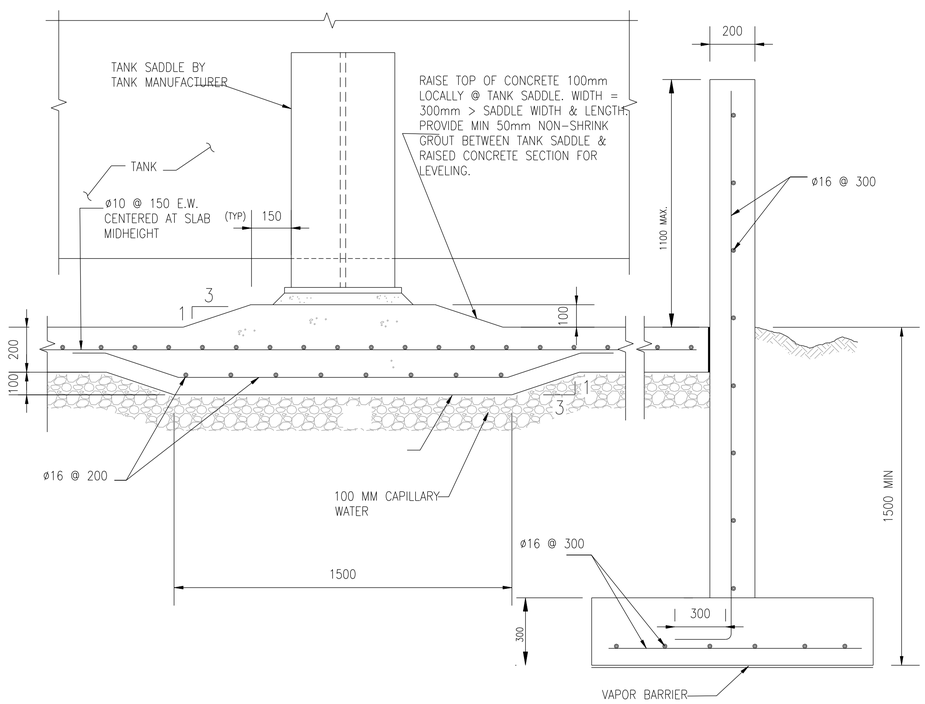

2 CONTAINMENT PAD SECTION

PP-S-02 SCALE : N.T.S

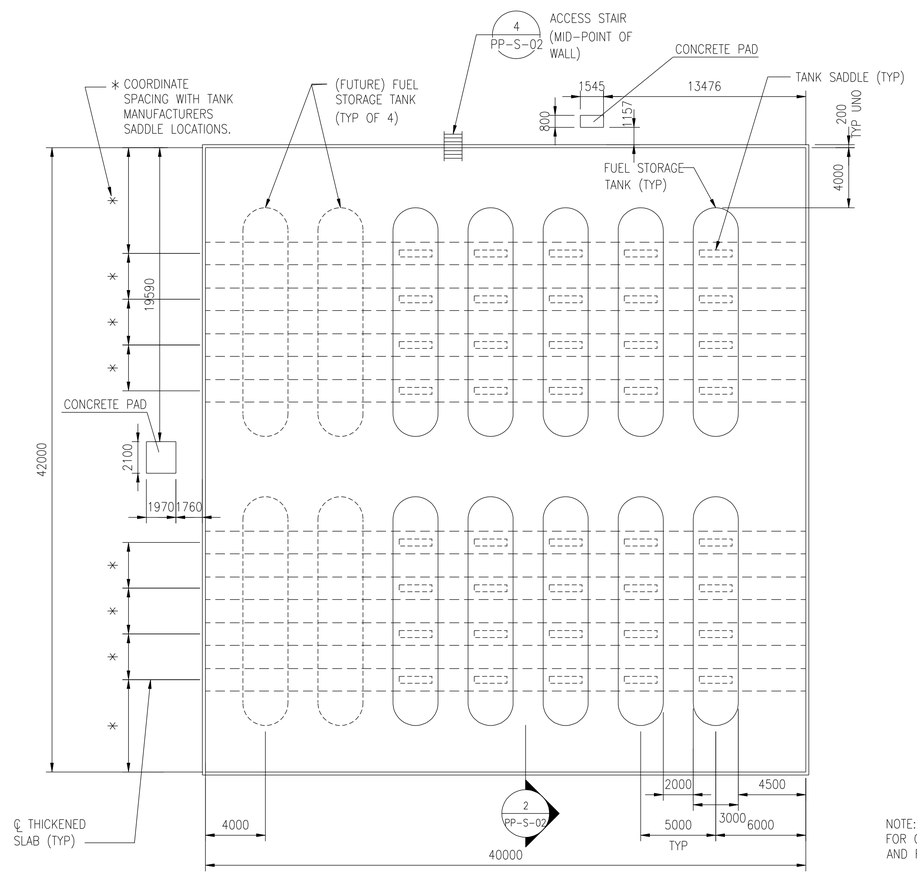

NOTE: SEE CIVIL DWG SW-C-203 FOR CONTAINMENT PAD LOCATION AND FUEL TANK LAYOUT.

1 BULK FUEL STORAGE CONTAINMENT PAD PLAN

PP-S-02 SCALE : N.T.S

SYMBOL	DESCRIPTION	DATE	APR

DESIGNED BY: TCP
DWN BY: TCP
CHK BY: KGO
DATE: 06-27-07
SUBMITTED BY: PHILIP J. PANELLO, CHIEF, PDT FACILITIES DEV
FILE NO.: AF07070-PP-S-02

US Army Corps of Engineers Transatlantic Programs Center

ANA REGIONAL BRIGADE
PAKTIKA, AFGHANISTAN
POWER PLANT
CONTAINMENT PAD PLAN & SPREAD FOOTING - SECTIONS AND DETAILES

SHEET REFERENCE NUMBER:
PP-S-02

$(getvar, "dwgprefix")$(getvar, "dwgname")$(edtime, O, MON DD", YYYY - HH:MMam/pm)

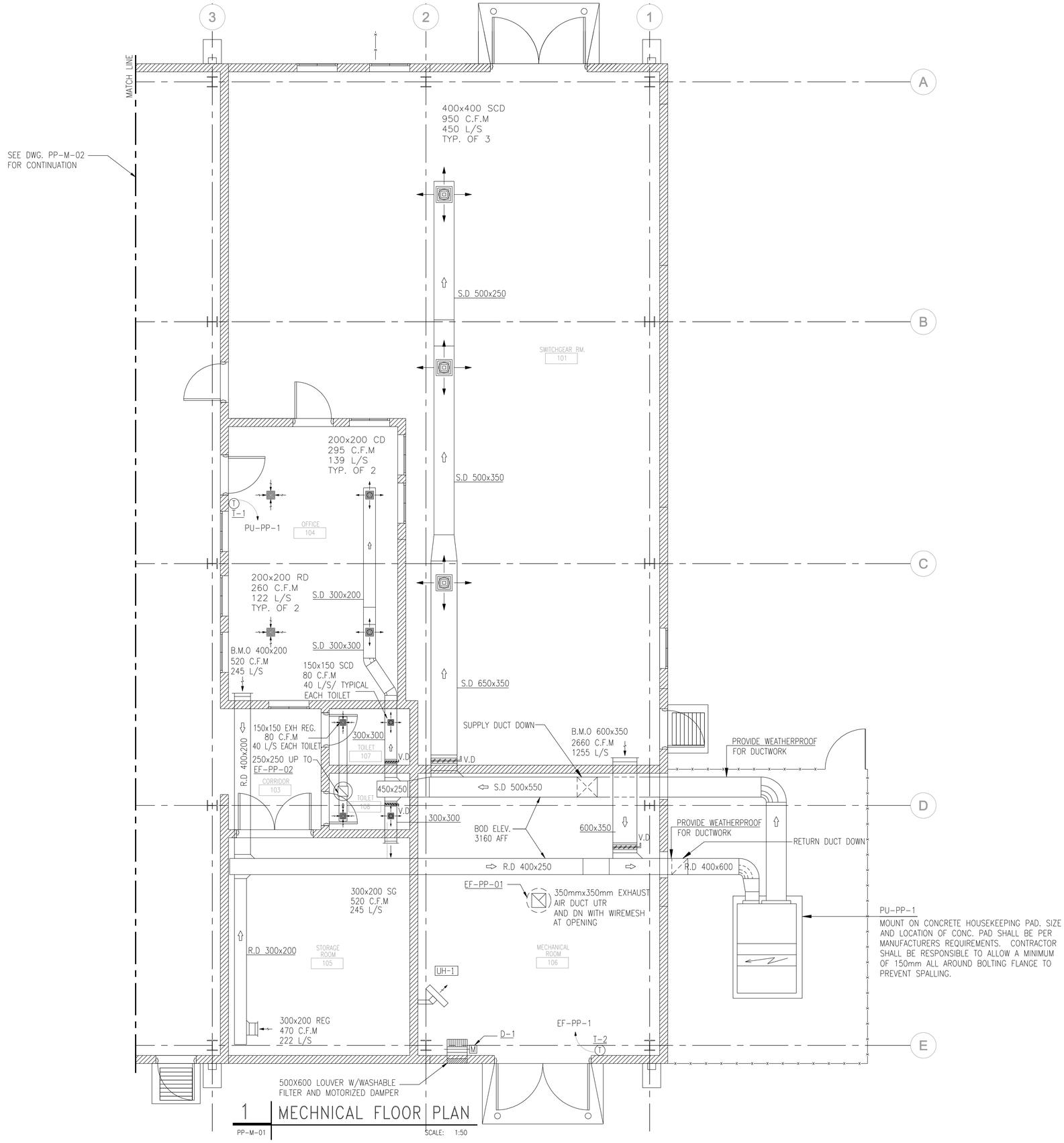

1 MECHNICAL FLOOR PLAN

PP-M-01

SCALE: 1:50

NOTES:

1. FOR STANDARD DETAILS SEE DWG No. CO-M-01,02,03 AND 04
2. FOR LEGEND AND ABBREVIATION SEE DWG No. CO-M-06
3. FOR TEMP. CONTROL DIAGRAM AND SCHEDULE SEE DWG No. PP-M-04

1 0 1 2 3 4

1:50 DRAWING NOT TO SCALE

SYMBOL	DESCRIPTION	DATE	APR

DESIGNED BY: M.MAKIN
DATE: 06-27-07
SUBMITTED BY: R. GREWAL CHIEF, BLDG SYSTEMS
DWN BY: M.MAKIN
CHK BY: A.MAKRAM
FILE NO.: AF0707PP-M-01

US Army Corps of Engineers Transatlantic Programs Center

ANA REGIONAL BRIGADE
PAKTIKA, AFGHANISTAN

POWER PLANT
MECHANICAL FLOOR PLAN

SHEET REFERENCE NUMBER:

PP-M-01

$(getvar, "dwgprefix")$(getvar, "dwgname")$(edtime, 0, MON DD"", YYYY - H:MMam/pm)

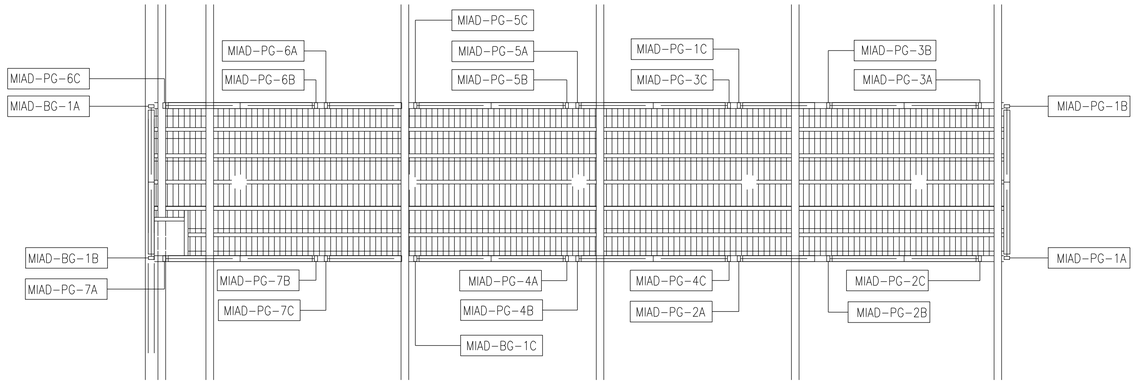

1 MOTORIZED INTAKE DAMPER LOCATION

PP-M-02

SCALE: 1:100

NOTES:

1. FOR TEM. CONTROL DIAGRAM AND SCHEDULES SEE DWG No PP-M-04
2. MOTORIZED DAMPER. SIZE SHALL MATCH THE LOUVER SIZE.
3. EXHAUST AIR LOUVER. SEE ARCHITECTURAL DRAWINGS FOR SIZE.
4. FLEXIBLE DUCT CONNECTION TYPICAL.
5. GENERATOR ENGINE EXHAUST PIPE TYPICAL. SIZE TO MATCH GEN. SET AND MUFFLER PROVIDED.
6. PROVIDE STEEL PIPE SLEEVE WITH MINIMUM 25 mm AIR SPACE BETWEEN PIPE INSULATION (AND FINISH) AND THE INSIDE DIAMETER OF THE SLEEVE. PROVIDE A SHEET METAL RAIN PROOF COVER ON THE OUT SIDE. THIS IS TYPICAL FOR ALL GENERATOR SETS.
7. PROVIDE SLEEVE AROUND BUILDING COLUMNS. REFER TO SMACNA HVAC DUCT CONSTRUCTION STANDARDS (1995) FIGURE 2-8.

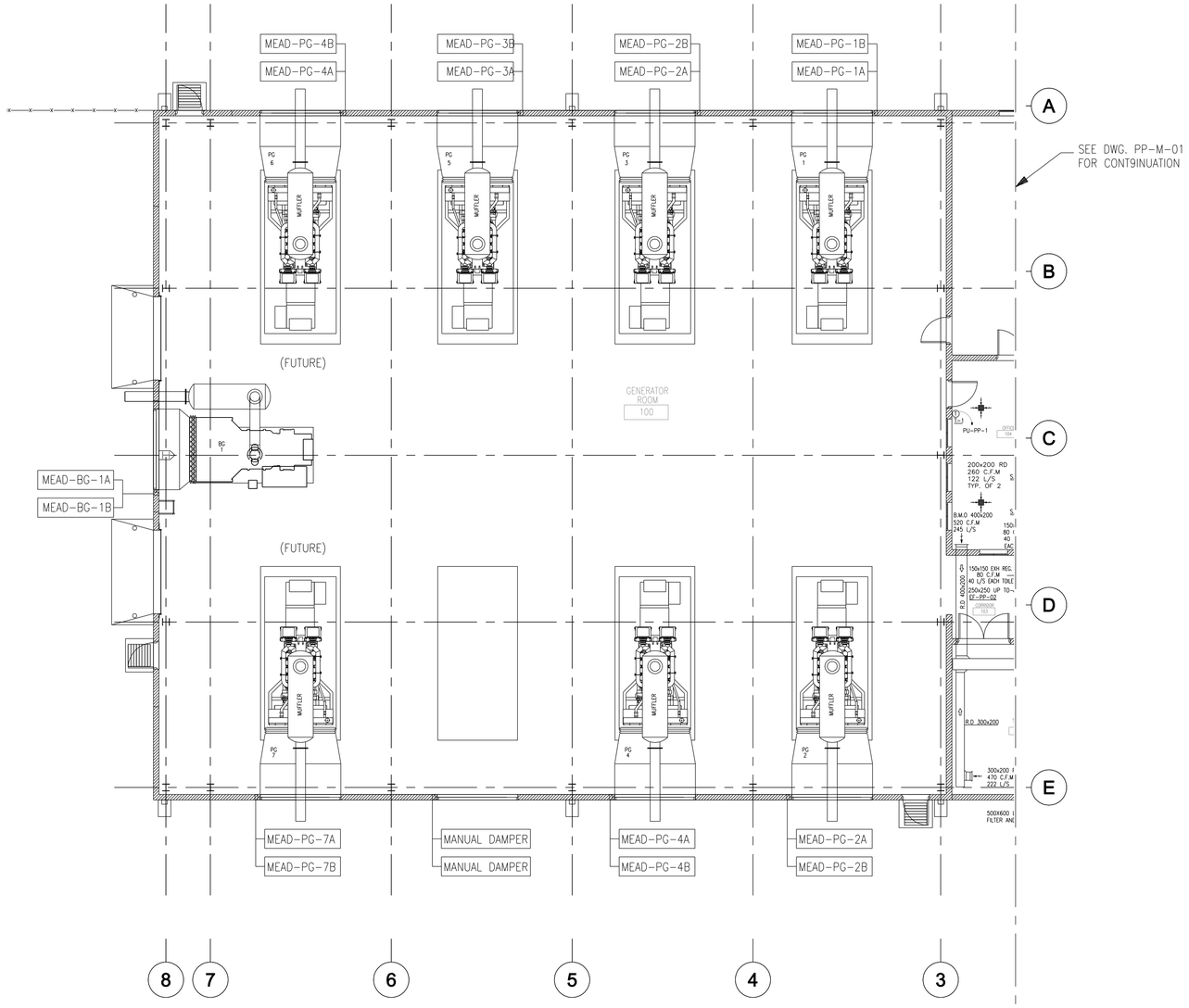

2 MOTORIZED EXHAUST DAMPER LOCATION

PP-M-02

SCALE: 1:100

1 0 1 2 3 4 5 6 7 8 9
1:100

DRAWING NOT TO SCALE

SYMBOL	DESCRIPTION	DATE	APR

DESIGNED BY: M.MAKIN
DWN BY: M.MAKIN
CHK BY: A.MAKRAM
DATE: 06-27-07
SUBMITTED BY: R. CREWAL CHIEF, PDT BLDG SYSTEMS
FILE NO.: AF0707PP-M-02

US Army Corps of Engineers Transatlantic Programs Center

ANA REGIONAL BRIGADE
PAKTIKA, AFGHANISTAN

POWER PLANT
MECHANICAL MOTORIZED DAMPERS

SHEET REFERENCE NUMBER:
PP-M-02

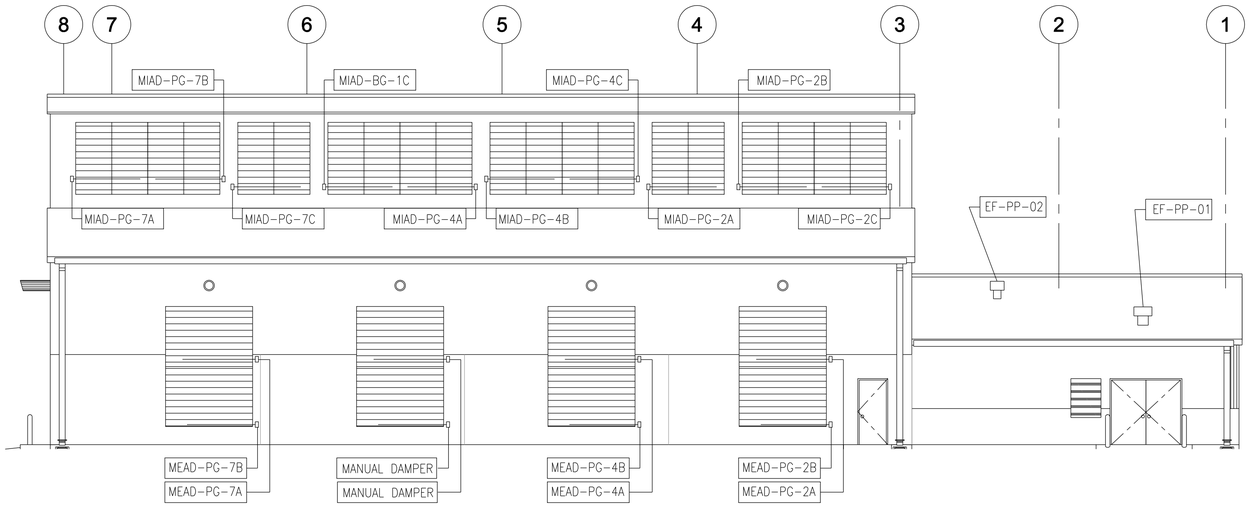

1 ELEVATION – FRONT

PP-M-03 SCALE: 1:100

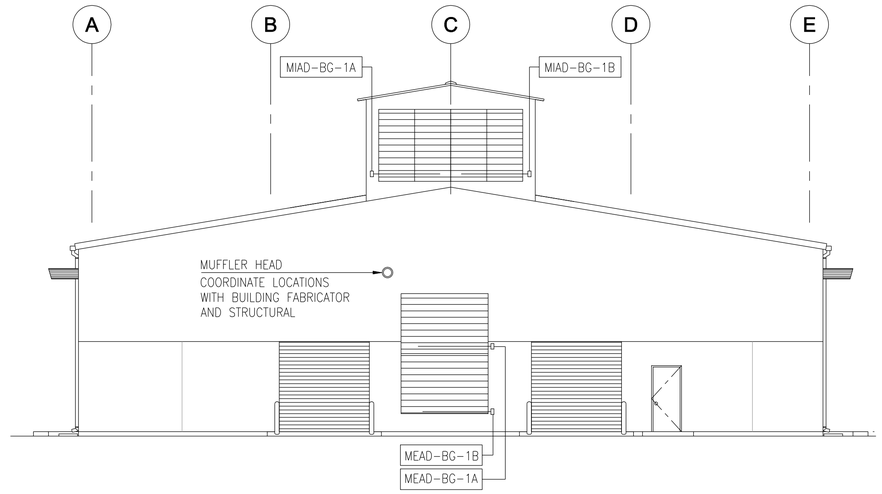

2 ELEVATION – SIDE

PP-M-03 SCALE: 1:100

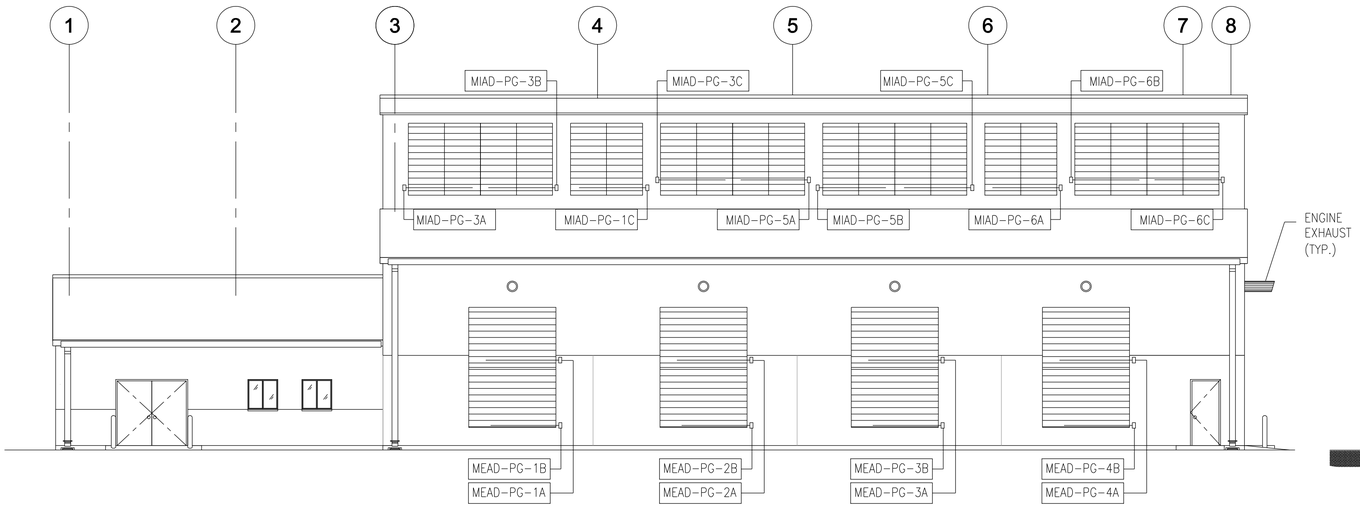

3 ELEVATION – REAR

PP-M-03 SCALE: 1:100

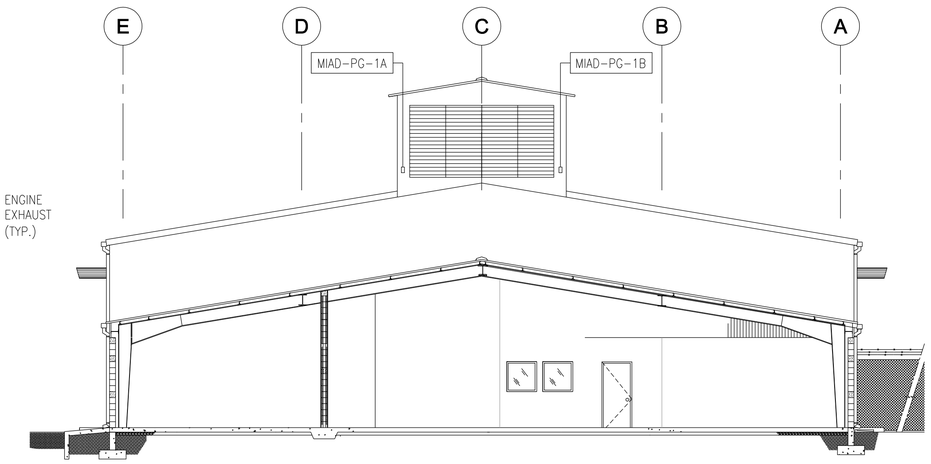

4 SECTION – SIDE INTERIOR WALL

PP-M-03 SCALE: 1:100

1 0 1 2 3 4
1:50

DRAWING NOT TO SCALE

SYMBOL	DESCRIPTION	DATE	APR

DESIGNED BY: M.MAKIN
DATE: 06-27-07
DWN BY: M.MAKIN
SUBMITTED BY: R. CREWAL CHIEF, PP&T BLDG SYSTEMS
CHK BY: A.MAKRAM
FILE NO.: AF0707PP-M-03

US Army Corps of Engineers Transatlantic Programs Center

ANA REGIONAL BRIGADE
PAKTIKA, AFGHANISTAN

POWER PLANT
SECTION – DAMPERS

SHEET REFERENCE NUMBER:
PP-M-03

$(getvar, "dwgprefix")$(getvar, "dwgname")$(edtime, 0, MON DD"," YYYY – HHMMam/pm)

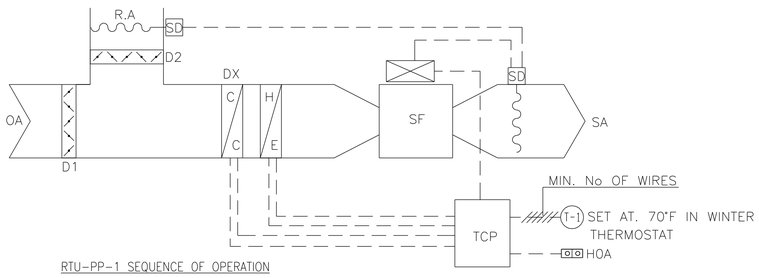

RTU-PP-1 SEQUENCE OF OPERATION

T-1 THERMOSTAT SHALL BE PROVIDE TWO STAGE HEATING AND TWO STAGE COOLING CONTROL. T-1 SHALL HAVE A SWITCHING SUB-BASE FOR HEATING AND COOLING MODES AND FAN ON/AUTO. THE DUCT SMOKE DETECTORS SHALL BE THE IONIZATION TYPE, UL LISTED. IF EITHER DETECTOR SENSES UNSAFE LEVELS OF PRODUCTS OF COMBUSTION, THE RTU SHALL BE DE-ENERGIZED.

1 PU-PP-01 TEMPERATURE CONTROL DIAGRAM

PP-M-04 SCALE: N.T.S

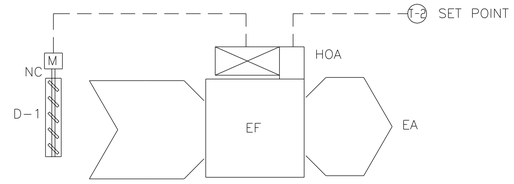

EXHAUST FAN SEQUENCE OF OPERATION

EF-PP-01 SHALL BE CONTROLLED BY SPACE THERMOSTAT T-2. WHENEVER THE FAN MOTOR IS ENERGIZED, DAMPER D-1 SHALL OPEN. WHENEVER THE FAN MOTOR IS DE-ENERGIZED, DAMPER D-1 SHALL CLOSE.

2 EF-PP-01 TEMPERATURE CONTROL DIAGRAM

PP-M-04 SCALE: N.T.S

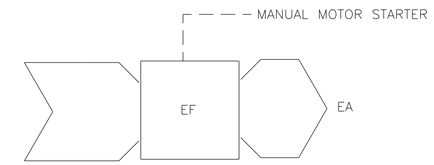

EXHAUST FAN SEQUENCE OF OPERATION

EF-PP-02 SHALL BE MANUALLY CONTROLLED AND SHALL RUN CONTINUOUSLY.

3 EF-PP-02 TEMPERATURE CONTROL DIAGRAM

PP-M-04 SCALE: N.T.S

EXHAUST FAN SCHEDULE (EF)

UNIT NUMBER	SERVICE	TYPE	AIR QUANTITY		FAN RPM	STATIC PRESSURE IN W.G.	ELECTRICAL DATA				INTERLOCK WITH	DRIVE TYPE	REMARKS
			CMH	CFM			H.P.	VOLTS	PHASE	HERTZ			
EF-PP-01	MECH. ROOM	R-CTFG-UB	1695	1000	1425	0.50	1/4	220	1	50	T-STAT	BELT	NOTE 1, 2
EF-PP-02	TOILET	R-CTFG-GP	270	160	1290	0.30	1/4	220	1	50		DIRECT	NOTE 1, 2

NOTES:-

1-SUPPLIED WITH BACKDRAFT DAMPER

2-ALL EXHAUST FANS WITH SINGLE PHASE POWER ARE TO BE PROVIDED WITH A FACTORY MOUNTED DISCONNECT SWITCH.

FAN SCHEDULE TYPE - LEGEND

(REF. EXHAUST AND SUPPLY FAN SCHEDULES)

R-CTFG-GP

- GP = GENERAL PURPOSE
- EP = EXPLOSION PROOF
- DB = DOWN BLAST
- UB = UP BLAST
- UT = UTILITY SET
- CTFG = CENTRIFUGAL
- PROP = PROPELLER
- TUBA = TUBE AXIAL
- TUCF = TUBULAR CENTRIFUGAL
- VA = VANE AXIAL
- R =ROOF
- W = WALL
- IL = INLINE
- CL = CEILING

AIR HANDLING UNIT SCHEDULE (PU-PP-1)

SYMBOL BUILDING NUMBER	PU-PP-1
AIR QUANTITY	
OUTSIDE AIR FLOW - CMH (CFM)	760 (445)
TOTAL SUPPLY FAN AIR FLOW - CMH (CFM)	6630 (3900)
EXT. STATIC PRESS. - mm Hg (IN. WC)	28 (1.5)
OUTLET VELOCITY - M/S (FPM)	7.62 (1500)
FAN MOTOR KW	2.25
ELECTRICAL DATA - V/PH/HZ	380/3/50
COOLING COIL TYPE	DX
COOLING CAPACITY-KW	26.5
ELECTRIC HEATING CAPACITY-KW	15
NUMBER OF STAGES	2
HEATING COIL TYPE	ELECTRIC
TOTAL ELECTRIC LOAD AT COOLING	15.0
TOTAL ELECTRIC LOAD AT HEATING	18.0
COIL FACE VELOCITY - M/S (FPM)	-
AIR PRESSURE DROP - mm Hg (IN. WC)	-
BUILDING	POWER PLANT

RTU PP-1 SCHEDULE

PU PP-1 SHALL BE A PACKAGE ROOFTOP AC UNIT WITH ELECTRIC HEAT.

THE RTU SHALL BE PROVIDED WITH 30% EFFICIENT (ASHRAE 52) PLEATED THROWAWAY FILTER MEDIA.

ENGINE/GENERATOR MOTORIZED AIR INTAKE AND EXHAUST LOUVERS OPERATION

A. GENERAL

1. ALL MOTORIZED DAMPERS SHALL BE NORMALLY CLOSED TYPE (CLOSED WHEN THERE IS NO POWER APPLIED).
2. MIAD-PG-1A, 1B, 1C (AIR INTAKE) AND MEAD-PG-1A, 1B (RADIATOR EXHAUST) ARE INTERLOCKED WITH PG-1 START/STOP.
3. MIAD-PG-2A, 2B, 2C (AIR INTAKE) AND MEAD-PG-2A, 2B (RADIATOR EXHAUST) ARE INTERLOCKED WITH PG-2 START/STOP.
4. MIAD-PG-3A, 3B, 3C (AIR INTAKE) AND MEAD-PG-3A, 3B (RADIATOR EXHAUST) ARE INTERLOCKED WITH PG-3 START/STOP.
5. MIAD-PG-4A, 4B, 4C (AIR INTAKE) AND MEAD-PG-4A, 4B (RADIATOR EXHAUST) ARE INTERLOCKED WITH PG-4 START/STOP.
6. MIAD-PG-5A, 5B, 5C (AIR INTAKE) AND MEAD-PG-5A, 5B (RADIATOR EXHAUST) ARE INTERLOCKED WITH PG-5 START/STOP.
7. MIAD-PG-6A, 6B, 6C (AIR INTAKE) AND MEAD-PG-6A, 6B (RADIATOR EXHAUST) ARE INTERLOCKED WITH PG-6 START/STOP.
8. MIAD-PG-7A, 7B, 7C (AIR INTAKE) AND MEAD-PG-7A, 7B (RADIATOR EXHAUST) ARE INTERLOCKED WITH PG-7 START/STOP.
9. MIAD-BG-1A, 1B, 1C (AIR INTAKE) AND MEAD-BG-1A, 1B (RADIATOR EXHAUST) ARE INTERLOCKED WITH BG-1 START/STOP.

B. NORMAL OPERATION

1. UPON RECEIVING A START SIGNAL FROM A POWER GENERATOR SET, ITS INTERLOCK SHALL OPEN ITS RESPECTIVE AIR INTAKE AND RADIATOR EXHAUST DAMPERS.
2. WHEN MORE THAN ONE POWER GENERATOR SETS ARE STARTED, THEIR RESPECTIVE START SIGNALS SHALL OPEN THEIR RESPECTIVE AIR INTAKE AND RADIATOR EXHAUST DAMPERS.
3. ABOVE SEQUENCE SHALL BE REVERSED UPON SHUTTING DOWN THE ENGINE. A TIME DELAY OF 60 SECONDS (ADJUSTABLE) SHALL BE PROVIDED FOR CLOSING THE DAMPERS AFTER AN ENGINE IS SHUTDOWN.

ELECTRIC UNIT HEATER SCHEDULE (UH)

UNIT NUMBER	QTY.	HEATING CAPACITY TOTAL (KW)	HEATING CAPACITY TOTAL (BTUH)	ELECTRICAL DATA			REMARKS
				VOLTS	PHASE	HERTZ	
UH-1	1	3.0	14015	380	3	50	WALL SUSPENDED

MANUFACTURER SHALL PROVIDE BUILT-IN THERMOSTAT/ON-OFF SWITCH WITH OVERLOAD PROTECTION.

DRAWING NOT TO SCALE

SYMBOL	DESCRIPTION	DATE	APR

DESIGNED BY: M.MAKKIN
DWN BY: M.MAKKIN
CHK BY: A.MAKKRAM
DATE: 06-27-07
SUBMITTED BY: R. GREWAL CHIEF, FDTD BLDG SYSTEMS
FILE NO.: AF070PP-M-04

US Army Corps of Engineers Transatlantic Programs Center

ANA REGIONAL BRIGADE
PAKTIKA, AFGHANISTAN

POWER PLANT
CONTROL DIAGRAM AND SCHEDULES

SHEET REFERENCE NUMBER:
PP-M-04

$(getvar, "dwgprefix")$(getvar, "dwgname")$(edtime, 0, MON DD"", YYYY - H:MMam/pm)

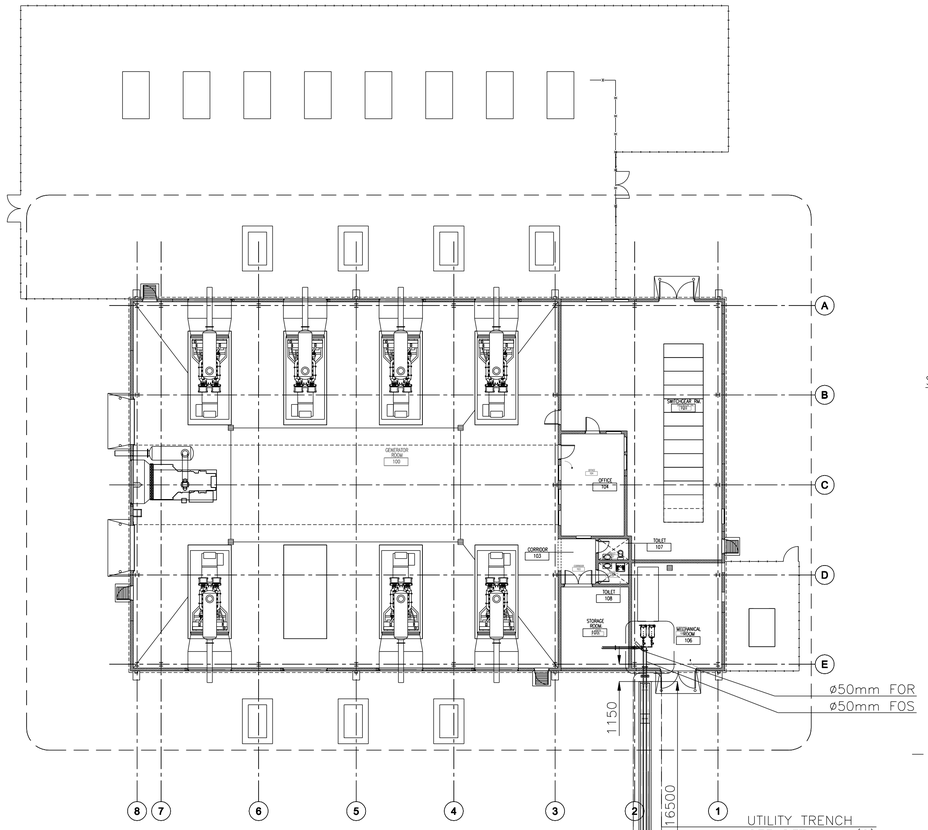

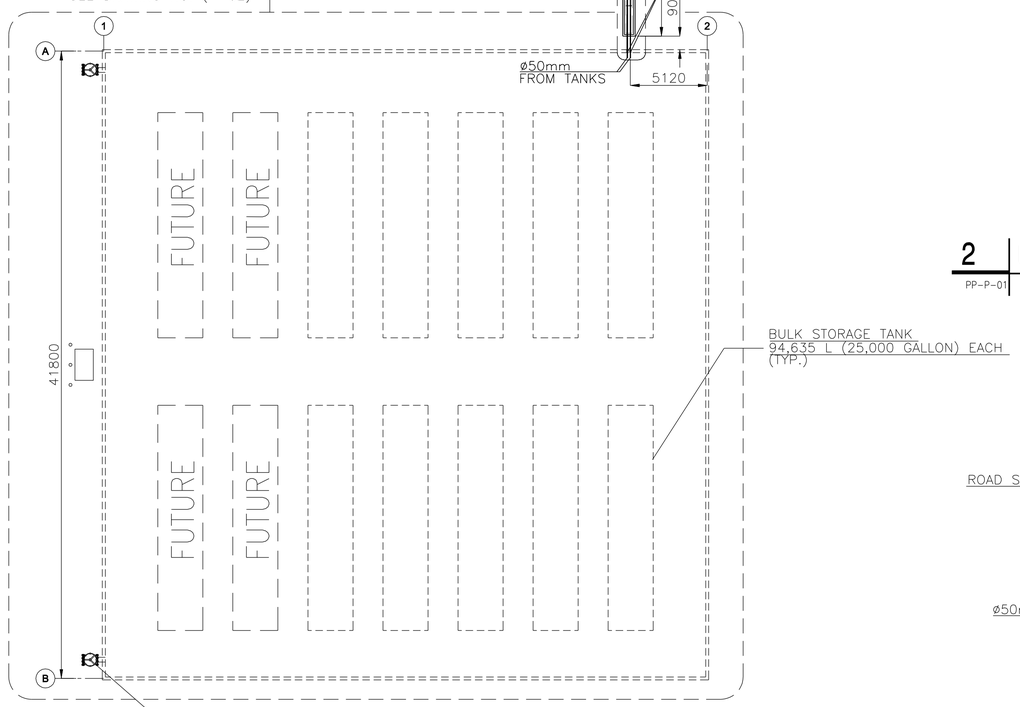

1 WASTE OIL & WASTE WATER PIPING PLAN

PP-P-01 SCALE: 1:200

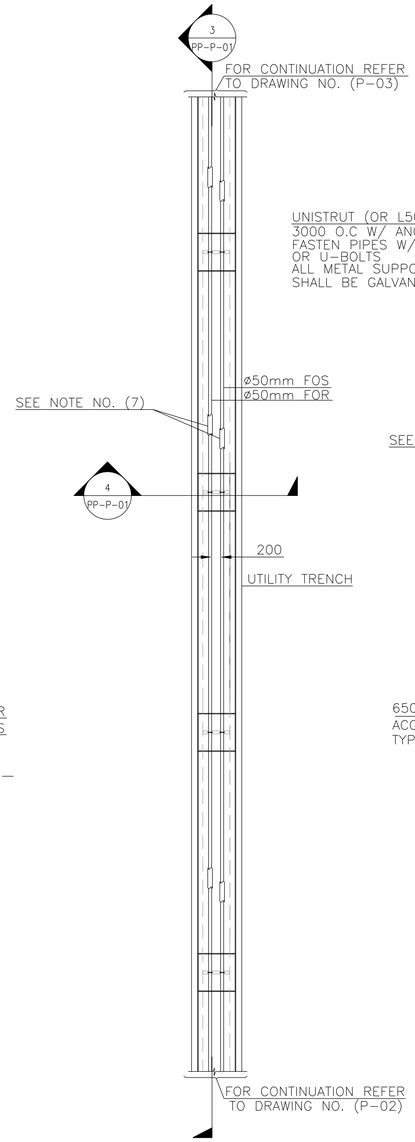

2 UTILITY TRENCH DETAIL

PP-P-01 SCALE: 1:50

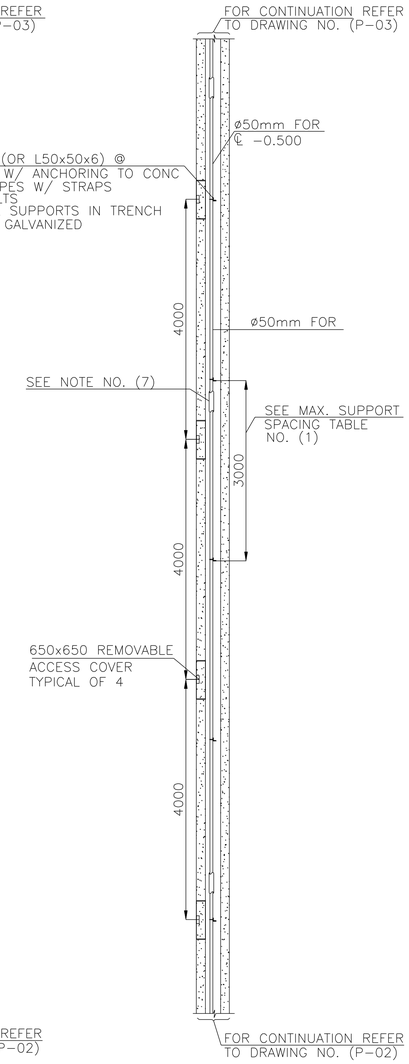

3 SECTION

PP-P-01 SCALE: 1:50

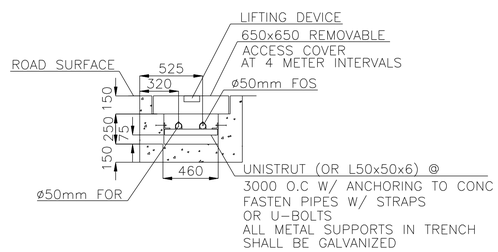

4 SECTION

PP-P-01 SCALE: 1:25

NOTES:

1. LEVELS REFERRED TO 0.00 LEVEL OF (F.F.L.)..
2. ALL DIMENSIONS IN (mm) AND LEVELS ARE IN METERS UNLESS OTHERWISE INDICATED.
3. DIMENSIONS AND LEVELS ARE TO NEAREST 5mm.
4. CARBON STEEL PIPE SHALL BE IN ACCORDANCE WITH ASTM A53/A 53M,TYPE E OR S,GRADE B OR API SPEC 5L STANDARDS, SEAMLESS OR ELECTRIC-WELD, GRADE B. PIPE SMALLER THAN 65mm SHALL BE SCHEDULE 80. PIPE 65mm AND LARGER SHALL BE SCHEDULE 40, 40S.
5. CONNECTIONS FOR STEEL PIPE OR FITTINGS SMALLER THAN 65mm SHALL BE FORGED SOCKET WELD TYPE, 2000 W.O.G. CONFORMING TO ASTM A182/A182M STANDARDS. TO ASTM A182/A182M STANDARDS. CONNECTIONS FOR STEEL PIPE OR FITTINGS 65mm AND LARGER SHALL BE BUTT WELD TYPE CONFORMING TO ASTM A234/A234M. STANDARDS OF THE SAME WALL THICKNESS AS THE ADJOINING PIPE. PIPING IN INACCESSIBLE LOCATION, SUCH AS PRODUCT PIPING INSIDE OF CONTAINMENT PIPING, SHALL BE WELDED.
6. THREADED CONNECTIONS SHALL ONLY BE USED ON PIPING 50mm IN NOMINAL SIZE OR SMALLER AND ONLY WHERE INDICATED. CONNECTIONS SHALL BE IN ACCORDANCE WITH ASME B16.3, CLASS 15 STANDARDS.
7. INSULATE (25mm THICKNESS) ALL OUTDOOR FUEL PIPING INCLUDING PIPING IN THE TRENCH.
8. STEEL COUPLING SHALL BE IN ACCORDANCE WITH API SPEC 5L STANDARDS, SEAMLESS, EXTRA HEAVY, WROUGHT STEEL WITH RECESSED ENDS.
9. WELDED NIPPLE SHALL BE IN ACCORDANCE WITH ASTM A733 OR ASTM B687 STANDARDS, AND OF THE SAME MATERIAL AS THE PRODUCT PIPING.
10. THREADED UNIONS SHALL BE ONLY BE USED ON CAST STEEL PIPING 50mm IN NOMINAL SIZE OR SMALLER AND ONLY WHERE INDICATED. UNION SHALL BE IN ACCORDANCE WITH ASME B16.39 CLASS 150 STANDARDS.
11. FLEXIBLE CONNECTOR SHALL CONFORM TO REQUIREMENTS UL 567 STANDARDS. FLEXIBLE CONNECTOR SHALL HAVE A MINIMUM 300mm LIVE LENGTH WITH FLANGED END CONNECTION.
12. FLANGES INSTALLED ON EQUIPMENT, FITTINGS, OR PIPE SHALL BE CLASS 150 POUND FLANGES WHICH ARE RATED IN ACCORDANCE WITH ASME B16.5. FLANGES SHALL BE THE 1.6mm RAISED FACE TYPE.
13. FLANGE GASKETS SHALL BE 2mm THICK, NBR, AND IN ACCORDANCE WITH ASME B16.21.
14. FLANGES SHALL BE PROVIDED WITH AN ELECTRICAL INSULATING MATERIAL CONFORMING TO ASTM D 229.
15. STRAINER SHALL BE IN ACCORDANCE WITH ASTM F 1199 AND ASTM F 1200, STRAINER SHALL BE THE BE THE CLEANABLE, BASKET OR "Y" TYPE, AND BE THE SAME SIZE AS THE PIPELINE.
16. PORTIONS OF A VALVE COMING IN CONTACT WITH FUEL SHALL BE COMPATIBLE WITH E FUEL TO BE HANDLED. VALVES SHALL HAVE BODIES, BONNETS, AND COVERS CONSTRUCTED OF CAST STEEL CONFORMING TO ASTM A216/A 216M,GRADE WCB STANDARDS.
17. HANGERS AND SUPPORTS SHALL BE OF THE ADJUSTABLE TYPE AND CONFORM TO MSS SP-58 & MSS SP-69 STANDARDS. THE FINISH OF RODS, NUTS, BOLTS, WASHERS, HANGERS, AND SUPPORTS SHALL BE HOT-DIPPED GALVANIZED.
18. FUEL DAY TANK CAPACITY SHALL BE 2270 L (600 GALLONS). SEE SPECIFICATIONS FOR REQUIREMENTS.
19. CONTRACTOR SHALL REFILL ALL TANKS FULL AFTER TESTING AND BEFORE PROJECT TURNOVER.

SYMBOL	DESCRIPTION	DATE	APR

DESIGNED BY: HANAN E.
DWN BY: HANY M.
CHK BY: G.TAWAB
DATE: 06-27-07
SUBMITTED BY: R. CREWAL, CHIEF, BLDG SYSTEMS
FILE NO.: AF0707PP-P-01

US Army Corps of Engineers Transatlantic Programs Center

ANA REGIONAL BRIGADE
PAKTIKA, AFGHANISTAN

POWER PLANT

FUEL OIL PIPING, BULK STORAGE TANKS LAYOUT & DETAILS

SHEET REFERENCE NUMBER:
PP-P-01

2 0 2 4 6 8 10 12 14 16 18
1:200
1 0 1 2 3 4
1:50
1 .50 0 1 1.5
1:25

$(getvar, "dwgprefix")$(getvar, "dwgname")$(edtime, 0, MON DD", YYYY - HAMMam/pm)

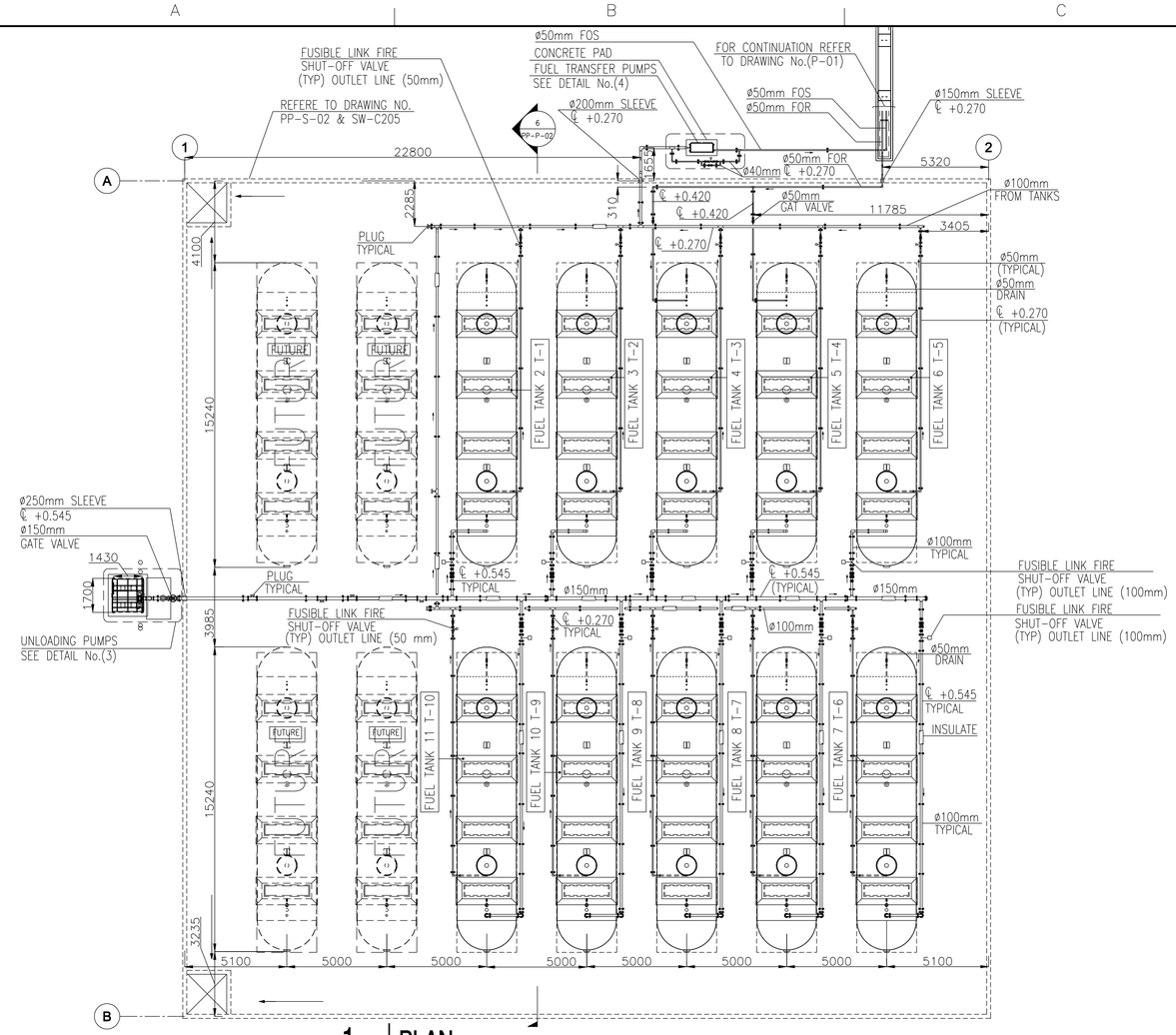

1 PLAN

PP-P-02 SCALE: 1:150

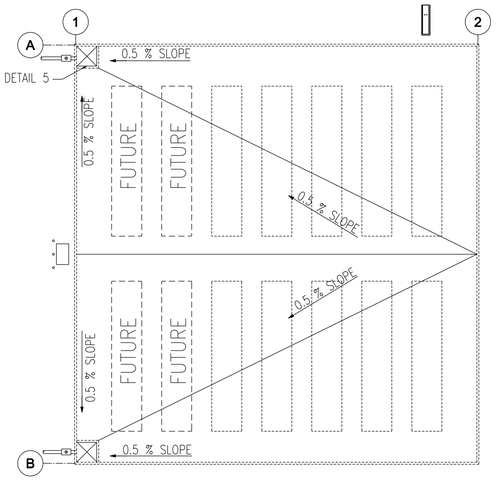

2 STORM DRAINAGE PIPING PLAN

PP-P-02 SCALE: 1:300

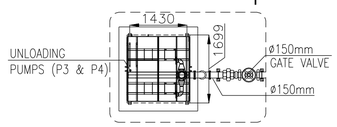

3 DETAIL FUEL TRANSFER EQUIPMENT SEE DRAWING No.(CO-P-06)

PP-P-02 SCALE: 1:50

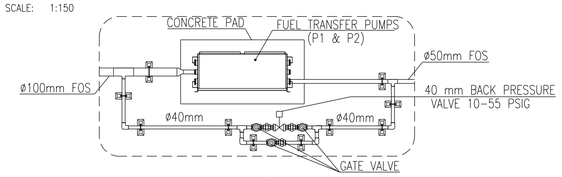

4 DETAIL REMOTE PUMP UNIT SEE DRAWING No.(CO-P-06)

PP-P-02 SCALE: 1:50

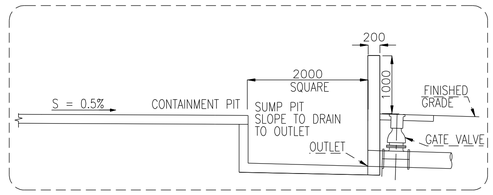

5 FUEL CONTAINMENT AND SUMP PIT DETAIL

PP-P-02 SCALE: N.T.S

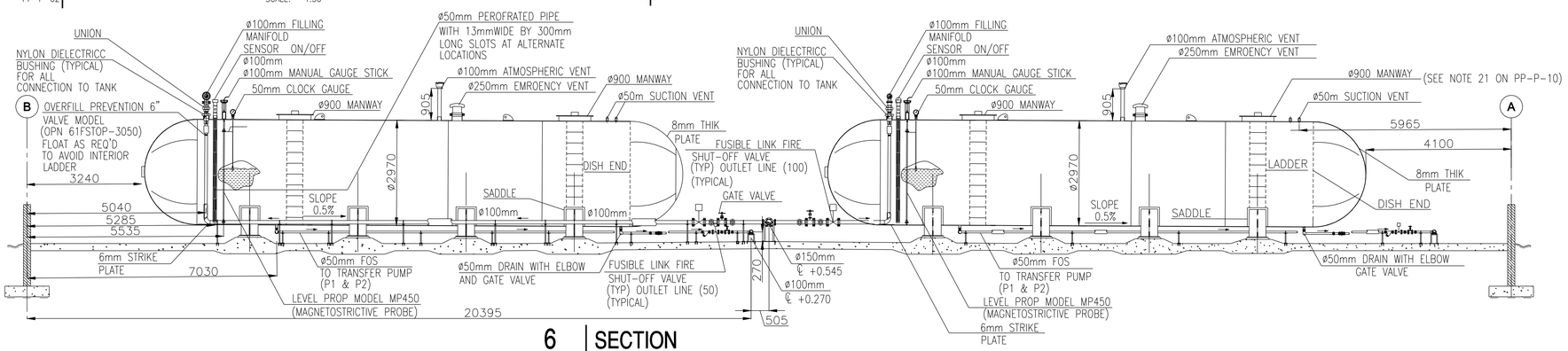

6 SECTION

PP-P-02 SCALE: 1:75

NOTES:

1. LEVELS REFERRED TO 0.00 LEVEL OF (F.F.L.)..
2. ALL DIMENSIONS IN (mm) AND LEVELS ARE IN METERS UNLESS OTHERWISE INDICATED.
3. DIMENSIONS AND LEVELS ARE TO NEAREST 5mm.
4. CARBON STEEL PIPE SHALL BE IN ACCORDANCE WITH ASTM A53/A 53M,TYPE E OR S,GRADE B OR API SPEC 5L STANDARDS, SEAMLESS OR ELECTRIC-WELD, GRADE B. PIPE SMALLER THAN 65mm SHALL BE SCHEDULE 80. PIPE 65mm AND LARGER SHALL BE SCHEDULE 40, 40S.
5. CONNECTIONS FOR STEEL PIPE OR FITTINGS SMALLER THAN 65mm SHALL BE FORGED SOCKET WELD TYPE, 2000 W.O.G. CONFORMING TO ASTM A182/A182M STANDARDS. TO ASTM A182/A182M STANDARDS. CONNECTIONS FOR STEEL PIPE OR FITTINGS 65mm AND LARGER SHALL BE BUTT WELD TYPE CONFORMING TO ASTM A234/A234M. STANDARDS OF THE SAME WALL THICKNESS AS THE ADJOINING PIPE. PIPING IN INACCESSIBLE LOCATION, SUCH AS PRODUCT PIPING INSIDE OF CONTAINMENT PIPING, SHALL BE WELDED.
6. THREADED CONNECTIONS SHALL ONLY BE USED ON PIPING 50mm IN NOMINAL SIZE OR SMALLER AND ONLY WHERE INDICATED. CONNECTIONS SHALL BE IN ACCORDANCE WITH ASME B16.3, CLASS 15 STANDARDS.
7. INSULATE (25mm THICKNESS) ALL OUTDOOR FUEL PIPING INCLUDING PIPING IN THE TRENCH.
8. STEEL COUPLING SHALL BE IN ACCORDANCE WITH API SPEC 5L STANDARDS, SEAMLESS, EXTRA HEAVY, WROUGHT STEEL WITH RECESSED ENDS.
9. WELDED NIPPLE SHALL BE IN ACCORDANCE WITH ASTM A733 OR ASTM B687 STANDARDS, AND OF THE SAME MATERIAL AS THE PRODUCT PIPING.
10. THREADED UNIONS SHALL BE ONLY BE USED ON CAST STEEL PIPING 50mm IN NOMINAL SIZE OR SMALLER AND ONLY WHERE INDICATED. UNION SHALL BE IN ACCORDANCE WITH ASME B16.39 CLASS 150 STANDARDS.
11. FLEXIBLE CONNECTOR SHALL CONFORM TO REQUIREMENTS UL 567 STANDARDS. FLEXIBLE CONNECTOR SHALL HAVE A MINIMUM 300mm LIVE LENGTH WITH FLANGED END CONNECTION.
12. FLANGES INSTALLED ON EQUIPMENT, FITTINGS, OR PIPE SHALL BE CLASS 150 POUND FLANGES WHICH ARE RATED IN ACCORDANCE WITH ASME B16.5. FLANGES SHALL BE THE 1.6mm RAISED FACE TYPE.
13. FLANGE GASKETS SHALL BE 2mm THICK, NBR, AND IN ACCORDANCE WITH ASME B16.21.
14. FLANGES SHALL BE PROVIDED WITH AN ELECTRICAL INSULATING MATERIAL CONFORMING TO ASTM D 229.
15. STRAINER SHALL BE IN ACCORDANCE WITH ASTM F 1199 AND ASTM F 1200, STRAINER SHALL BE THE BE THE CLEANABLE, BASKET OR "Y" TYPE, AND BE THE SAME SIZE AS THE PIPELINE.
16. PORTIONS OF A VALVE COMING IN CONTACT WITH FUEL SHALL BE COMPATIBLE WITH E FUEL TO BE HANDLED. VALVES SHALL HAVE BODIES, BONNETS, AND COVERS CONSTRUCTED OF CAST STEEL CONFORMING TO ASTM A216/A 216M,GRADE WCB STANDARDS.
17. HANGERS AND SUPPORTS SHALL BE OF THE ADJUSTABLE TYPE AND CONFORM TO MSS SP-58 & MSS SP-69 STANDARDS. THE FINISH OF RODS, NUTS, BOLTS, WASHERS, HANGERS, AND SUPPORTS SHALL BE HOT-DIPPED GALVANIZED.
18. FUEL DAY TANK CAPACITY SHALL BE 2270 L (600 GALLONS). SEE SPECIFICATIONS FOR REQUIREMENTS.
19. CONTRACTOR SHALL REFILL ALL TANKS FULL AFTER TESTING AND BEFORE PROJECT TURNOVER.

SYMBOL	DESCRIPTION	DATE	APR

DESIGNED BY: HANAKK E. | DATE: 06-27-07 | SUBMITTED BY: R. CRESWAL CHIEF, BLDG SYSTEMS
DWN BY: HANKK M. | FILE NO.: AF070PP-P-02
CHK BY: G.TAWAB

US Army Corps of Engineers Transatlantic Programs Center

ANA REGIONAL BRIGADE
PAKTIKA, AFGHANISTAN

POWER PLANT
25000 GALLON DIESEL STORAGE TANKS
LAYOUT & DETAILS

SHEET REFERENCE NUMBER:
PP-P-02

6 0 6 12 18 24 1:300
1.5 0 3 6 9 12 1:150
1 0 1 2 3 4 1:50

$(getvar, "dwgprefix")$(getvar, "dwgname")$(edtime, 0, MON DD", YYYY - HHMMam/pm)

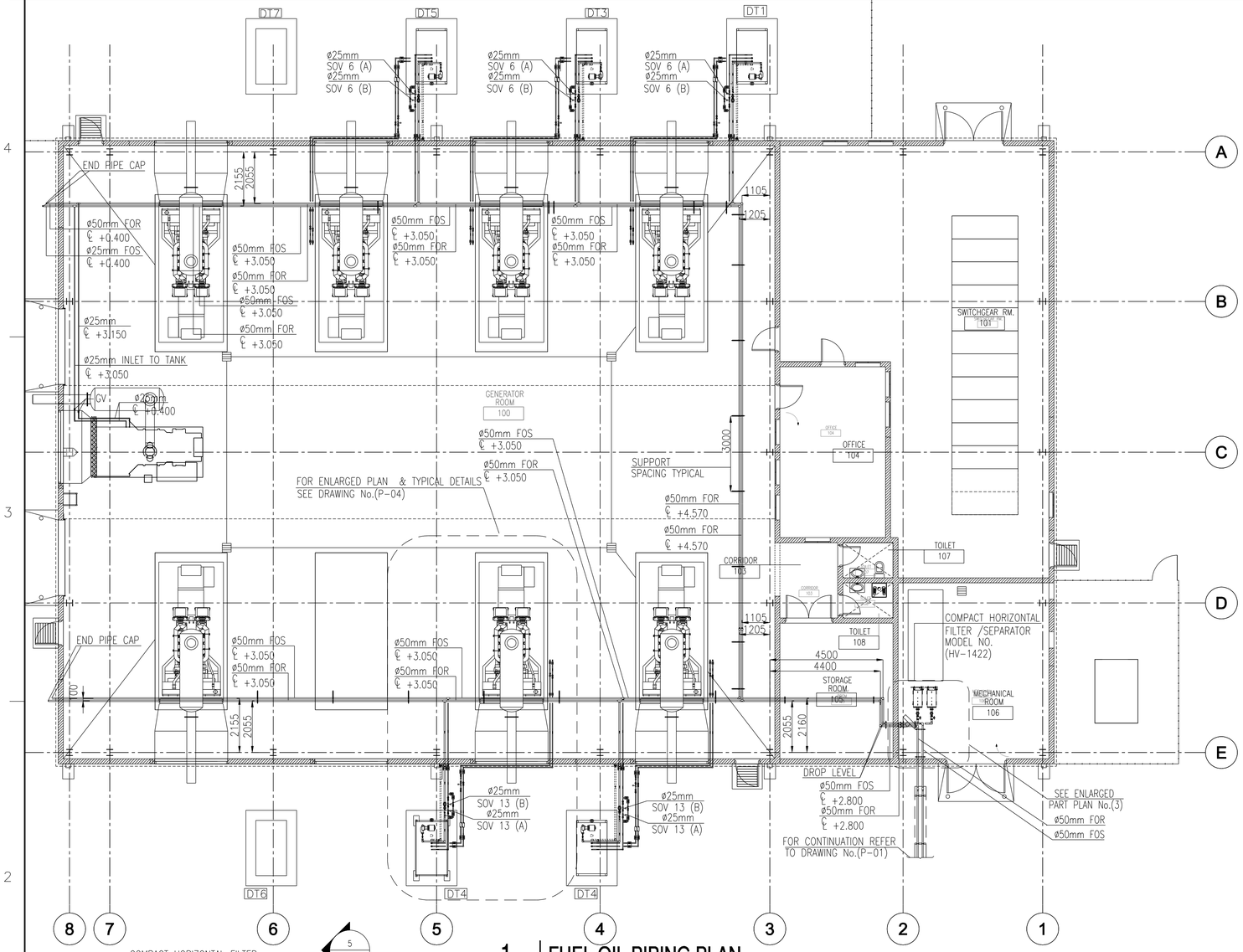

1 FUEL OIL PIPING PLAN

PP-P-03 SCALE: 1:100

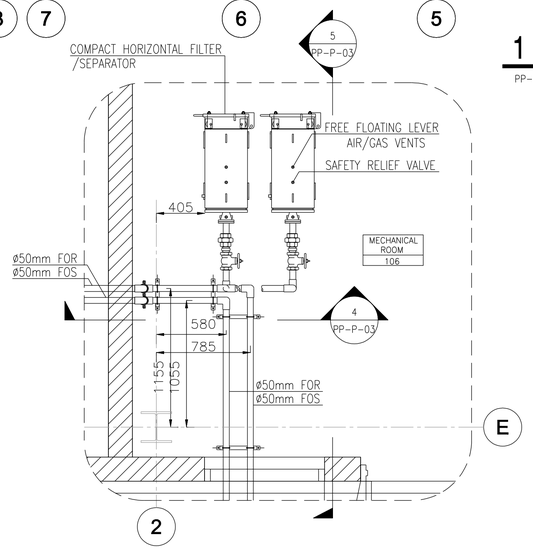

3 ENLARGED PART PLAN

PP-P-03 SCALE: 1:25

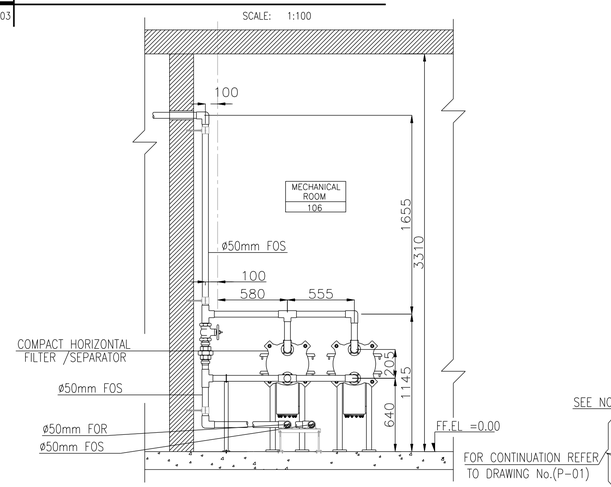

4 SECTION

PP-P-03 SCALE: 1:25

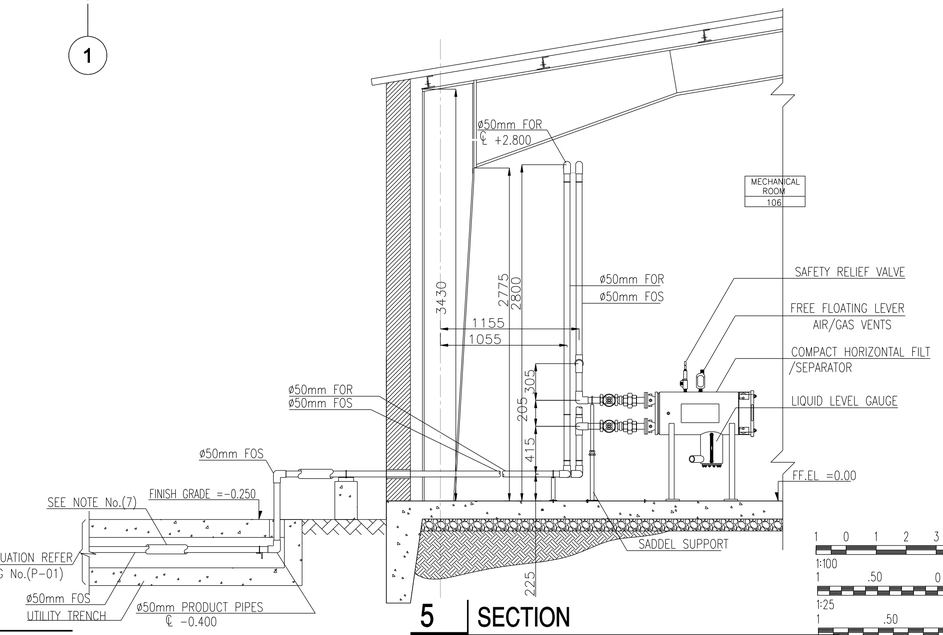

5 SECTION

PP-P-03 SCALE: 1:25

NOTES:

1. LEVELS REFERRED TO 0.00 LEVEL OF (F.F.L.)..
2. ALL DIMENSIONS IN (mm) AND LEVELS ARE IN METERS UNLESS OTHERWISE INDICATED.
3. DIMENSIONS AND LEVELS ARE TO NEAREST 5mm.
4. CARBON STEEL PIPE SHALL BE IN ACCORDANCE WITH ASTM A53/A 53M,TYPE E OR S,GRADE B OR API SPEC 5L STANDARDS, SEAMLESS OR ELECTRIC-WELD, GRADE B. PIPE SMALLER THAN 65mm SHALL BE SCHEDULE 80. PIPE 65mm AND LARGER SHALL BE SCHEDULE 40, 40S.
5. CONNECTIONS FOR STEEL PIPE OR FITTINGS SMALLER THAN 65mm SHALL BE FORGED SOCKET WELD TYPE, 2000 W.O.G. CONFORMING TO ASTM A182/A182M STANDARDS. TO ASTM A182/A182M STANDARDS. CONNECTIONS FOR STEEL PIPE OR FITTINGS 65mm AND LARGER SHALL BE BUTT WELD TYPE CONFORMING TO ASTM A234/A234M. STANDARDS OF THE SAME WALL THICKNESS AS THE ADJOINING PIPE. PIPING IN INACCESSIBLE LOCATION, SUCH AS PRODUCT PIPING INSIDE OF CONTAINMENT PIPING, SHALL BE WELDED.
6. THREADED CONNECTIONS SHALL ONLY BE USED ON PIPING 50mm IN NOMINAL SIZE OR SMALLER AND ONLY WHERE INDICATED. CONNECTIONS SHALL BE IN ACCORDANCE WITH ASME B16.3, CLASS 15 STANDARDS.
7. INSULATE (25mm THICKNESS) ALL OUTDOOR FUEL PIPING INCLUDING PIPING IN THE TRENCH.
8. STEEL COUPLING SHALL BE IN ACCORDANCE WITH API SPEC 5L STANDARDS, SEAMLESS, EXTRA HEAVY, WROUGHT STEEL WITH RECESSED ENDS.
9. WELDED NIPPLE SHALL BE IN ACCORDANCE WITH ASTM A733 OR ASTM B687 STANDARDS, AND OF THE SAME MATERIAL AS THE PRODUCT PIPING.
10. THREADED UNIONS SHALL BE ONLY BE USED ON CAST STEEL PIPING 50mm IN NOMINAL SIZE OR SMALLER AND ONLY WHERE INDICATED. UNION SHALL BE IN ACCORDANCE WITH ASME B16.39 CLASS 150 STANDARDS.
11. FLEXIBLE CONNECTOR SHALL CONFORM TO REQUIREMENTS UL 567 STANDARDS. FLEXIBLE CONNECTOR SHALL HAVE A MINIMUM 300mm LIVE LENGTH WITH FLANGED END CONNECTION.
12. FLANGES INSTALLED ON EQUIPMENT, FITTINGS, OR PIPE SHALL BE CLASS 150 POUND FLANGES WHICH ARE RATED IN ACCORDANCE WITH ASME B16.5. FLANGES SHALL BE THE 1.6mm RAISED FACE TYPE.
13. FLANGE GASKETS SHALL BE 2mm THICK, NBR, AND IN ACCORDANCE WITH ASME B16.21.
14. FLANGES SHALL BE PROVIDED WITH AN ELECTRICAL INSULATING MATERIAL CONFORMING TO ASTM D 229.
15. STRAINER SHALL BE IN ACCORDANCE WITH ASTM F 1199 AND ASTM F 1200, STRAINER SHALL BE THE BE THE CLEANABLE, BASKET OR "Y" TYPE, AND BE THE SAME SIZE AS THE PIPELINE.
16. PORTIONS OF A VALVE COMING IN CONTACT WITH FUEL SHALL BE COMPATIBLE WITH E FUEL TO BE HANDLED. VALVES SHALL HAVE BODIES, BONNETS, AND COVERS CONSTRUCTED OF CAST STEEL CONFORMING TO ASTM A216/A 216M,GRADE WCB STANDARDS.
17. HANGERS AND SUPPORTS SHALL BE OF THE ADJUSTABLE TYPE AND CONFORM TO MSS SP-58 & MSS SP-69 STANDARDS. THE FINISH OF RODS, NUTS, BOLTS, WASHERS, HANGERS, AND SUPPORTS SHALL BE HOT-DIPPED GALVANIZED.
18. FUEL DAY TANK CAPACITY SHALL BE 2270 L (600 GALLONS). SEE SPECIFICATIONS FOR REQUIREMENTS.
19. CONTRACTOR SHALL REFILL ALL TANKS FULL AFTER TESTING AND BEFORE PROJECT TURNOVER.

TABLE NO.(1)
BLACK STEEL PIPE

SIZE	MAXIMAM SPACING
ø32mm	2.130m
ø50mm	3.000m
ø75mm	3.660m
ø100mm	4.270m
ø150mm	5.180m

PIPE SUPPORT SPACING

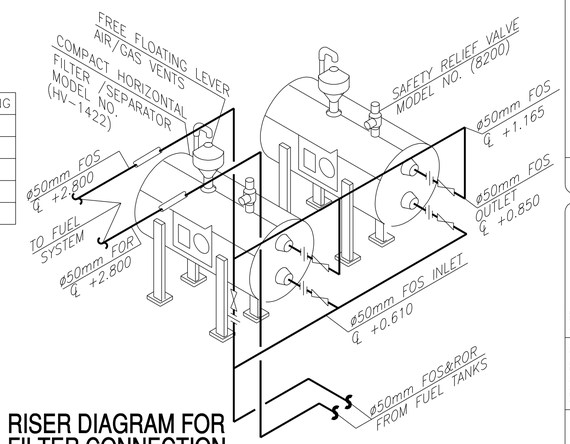

2 RISER DIAGRAM FOR FILTER CONNECTION

PP-P-03 SCALE: N.T.S

SYMBOL	DESCRIPTION	DATE	APR

DESIGNED BY: HANAN E. | DATE: 06-27-07
DWN BY: HANAN M. | SUBMITTED BY: R. PREWAL, CHIEF, BLDG SYSTEMS
CHK BY: G.TAWAB | FILE NO.: AF0707PP-P-03

US Army Corps of Engineers Transatlantic Programs Center

ANA REGIONAL BRIGADE
PAKTIKA, AFGHANISTAN

POWER PLANT
FUEL OIL PIPING PLAN & DETAILS

SHEET REFERENCE NUMBER:
PP-P-03

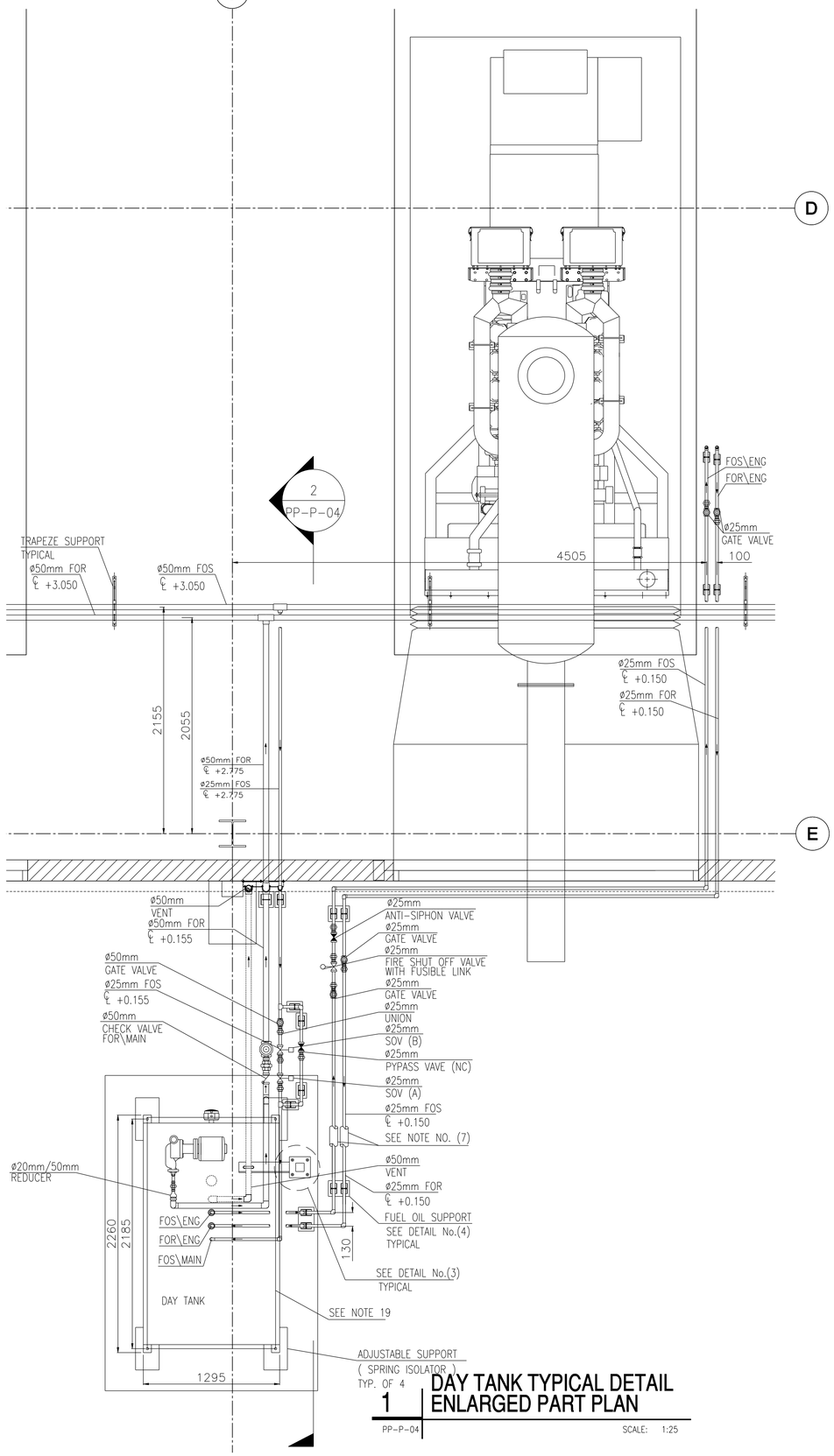

1 DAY TANK TYPICAL DETAIL ENLARGED PART PLAN

PP-P-04 SCALE: 1:25

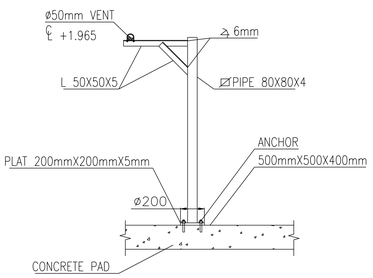

3 SUPPORT DETAIL

PP-P-04 SCALE: 1:25

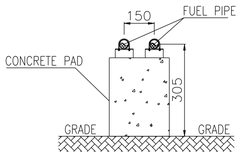

4 FUEL OIL PIPE SUPPORT DETAIL

PP-P-04 SCALE: 1:25

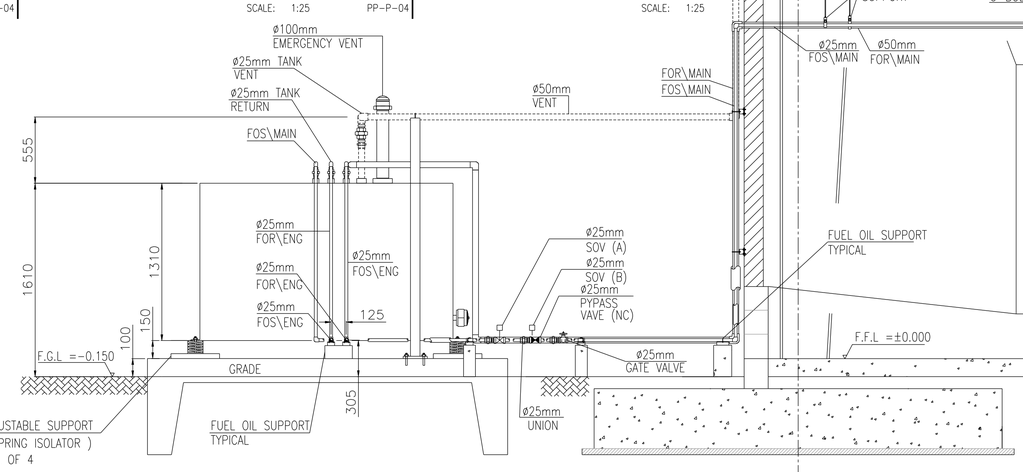

2 SECTION

PP-P-04 SCALE: 1:25

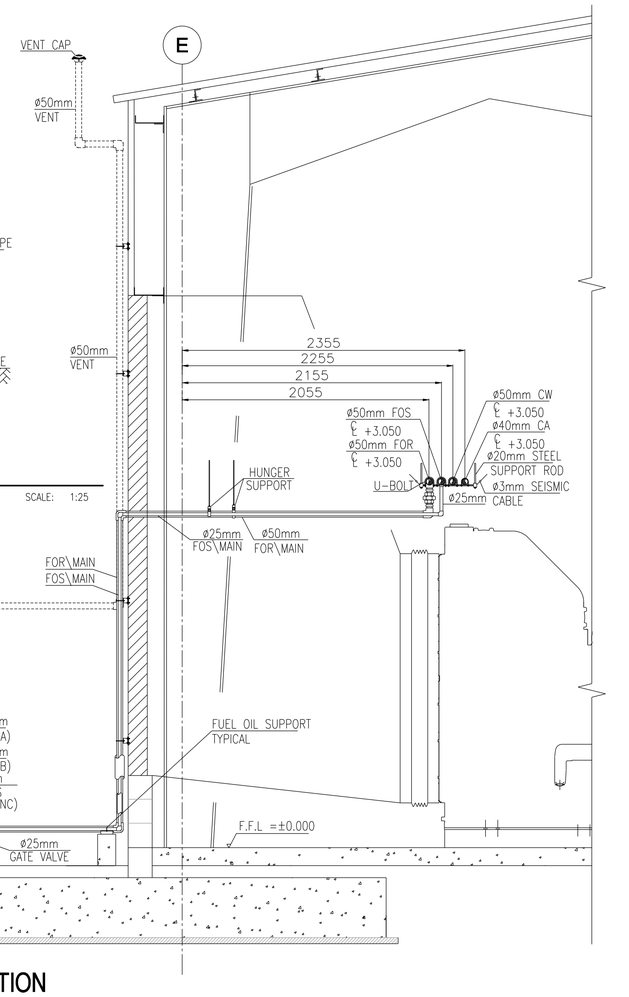

1 .50 0 1 1.5
1:25

NOTES:

1. LEVELS REFERRED TO 0.00 LEVEL OF (F.F.L.)..
2. ALL DIMENSIONS IN (mm) AND LEVELS ARE IN METERS UNLESS OTHERWISE INDICATED.
3. DIMENSIONS AND LEVELS ARE TO NEAREST 5mm.
4. CARBON STEEL PIPE SHALL BE IN ACCORDANCE WITH ASTM A53/A 53M,TYPE E OR S,GRADE B OR API SPEC 5L STANDARDS, SEAMLESS OR ELECTRIC-WELD, GRADE B. PIPE SMALLER THAN 65mm SHALL BE SCHEDULE 80. PIPE 65mm AND LARGER SHALL BE SCHEDULE 40, 40S.
5. CONNECTIONS FOR STEEL PIPE OR FITTINGS SMALLER THAN 65mm SHALL BE FORGED SOCKET WELD TYPE, 2000 W.O.G. CONFORMING TO ASTM A182/A182M STANDARDS. TO ASTM A182/A182M STANDARDS. CONNECTIONS FOR STEEL PIPE OR FITTINGS 65mm AND LARGER SHALL BE BUTT WELD TYPE CONFORMING TO ASTM A234/A234M. STANDARDS OF THE SAME WALL THICKNESS AS THE ADJOINING PIPE. PIPING IN INACCESSIBLE LOCATION, SUCH AS PRODUCT PIPING INSIDE OF CONTAINMENT PIPING, SHALL BE WELDED.
6. THREADED CONNECTIONS SHALL ONLY BE USED ON PIPING 50mm IN NOMINAL SIZE OR SMALLER AND ONLY WHERE INDICATED. CONNECTIONS SHALL BE IN ACCORDANCE WITH ASME B16.3, CLASS 15 STANDARDS.
7. INSULATE (25mm THICKNESS) ALL OUTDOOR FUEL PIPING INCLUDING PIPING IN THE TRENCH.
8. STEEL COUPLING SHALL BE IN ACCORDANCE WITH API SPEC 5L STANDARDS, SEAMLESS, EXTRA HEAVY, WROUGHT STEEL WITH RECESSED ENDS.
9. WELDED NIPPLE SHALL BE IN ACCORDANCE WITH ASTM A733 OR ASTM B687 STANDARDS, AND OF THE SAME MATERIAL AS THE PRODUCT PIPING.
10. THREADED UNIONS SHALL BE ONLY BE USED ON CAST STEEL PIPING 50mm IN NOMINAL SIZE OR SMALLER AND ONLY WHERE INDICATED. UNION SHALL BE IN ACCORDANCE WITH ASME B16.39 CLASS 150 STANDARDS.
11. FLEXIBLE CONNECTOR SHALL CONFORM TO REQUIREMENTS UL 567 STANDARDS. FLEXIBLE CONNECTOR SHALL HAVE A MINIMUM 300mm LIVE LENGTH WITH FLANGED END CONNECTION.
12. FLANGES INSTALLED ON EQUIPMENT, FITTINGS, OR PIPE SHALL BE CLASS 150 POUND FLANGES WHICH ARE RATED IN ACCORDANCE WITH ASME B16.5. FLANGES SHALL BE THE 1.6mm RAISED FACE TYPE.
13. FLANGE GASKETS SHALL BE 2mm THICK, NBR, AND IN ACCORDANCE WITH ASME B16.21.
14. FLANGES SHALL BE PROVIDED WITH AN ELECTRICAL INSULATING MATERIAL CONFORMING TO ASTM D 229.
15. STRAINER SHALL BE IN ACCORDANCE WITH ASTM F 1199 AND ASTM F 1200, STRAINER SHALL BE THE BE THE CLEANABLE, BASKET OR "Y" TYPE, AND BE THE SAME SIZE AS THE PIPELINE.
16. PORTIONS OF A VALVE COMING IN CONTACT WITH FUEL SHALL BE COMPATIBLE WITH E FUEL TO BE HANDLED. VALVES SHALL HAVE BODIES, BONNETS, AND COVERS CONSTRUCTED OF CAST STEEL CONFORMING TO ASTM A216/A 216M,GRADE WCB STANDARDS.
17. HANGERS AND SUPPORTS SHALL BE OF THE ADJUSTABLE TYPE AND CONFORM TO MSS SP-58 & MSS SP-69 STANDARDS. THE FINISH OF RODS, NUTS, BOLTS, WASHERS, HANGERS, AND SUPPORTS SHALL BE HOT-DIPPED GALVANIZED.
18. FUEL DAY TANK CAPACITY SHALL BE 2270 L (600 GALLONS). SEE SPECIFICATIONS FOR REQUIREMENTS.
19. CONTRACTOR SHALL REFILL ALL TANKS FULL AFTER TESTING AND BEFORE PROJECT TURNOVER.

SYMBOL	DESCRIPTION	DATE	APR

DESIGNED BY: HANAAK E.
DWN BY: HANY M.
CHK BY: G.TAWAB
DATE: 06-27-07
SUBMITTED BY: R. GREWAL CHIEF, FT BLDG SYSTEMS
FILE NO.: AF0707 PP-P-04

US Army Corps of Engineers Transatlantic Programs Center

ANA REGIONAL BRIGADE
PAKTIKA, AFGHANISTAN

POWER PLANT
DAY TANK PIPING
LAYOUT & DETAILS

SHEET REFERENCE NUMBER:
PP-P-04

$(getvar, "dwgprefix")$(getvar, "dwgname")$(edtime, 0, MON DD"", YYYY - HHMMam/pm)

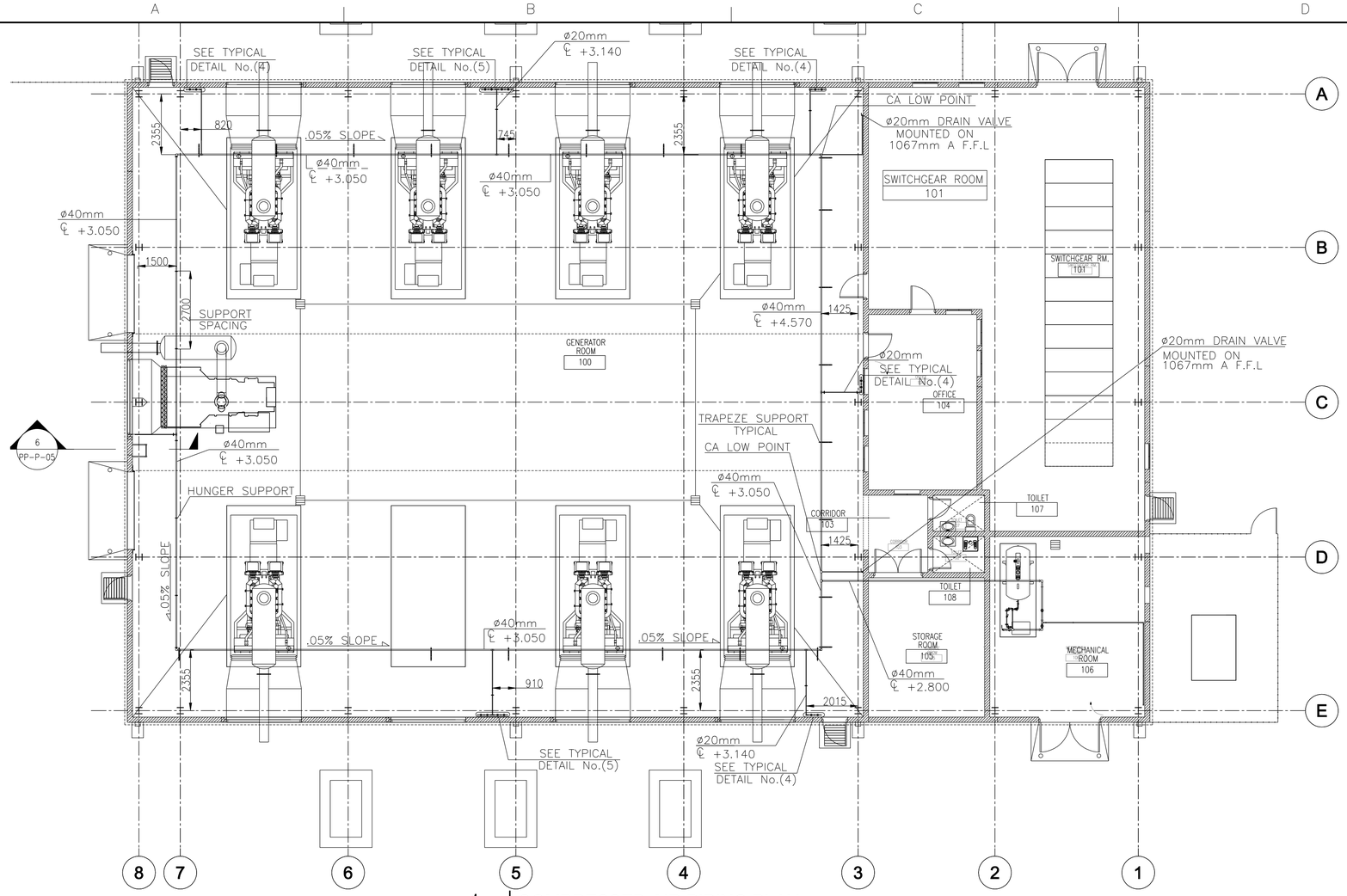

1 COMPRESSED AIR PIPING PLAN

PP-P-05 SCALE: 1:100

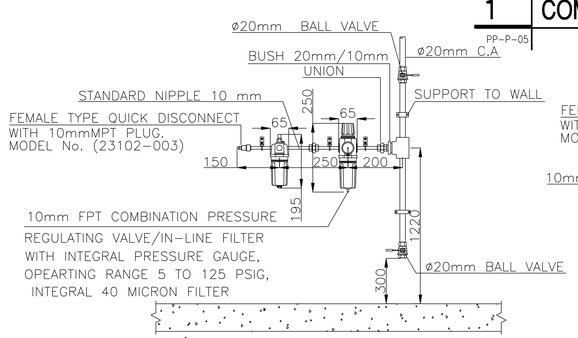

2 COMPRESSED AIR DROP DETAIL

PP-P-05 SCALE: N.T.S

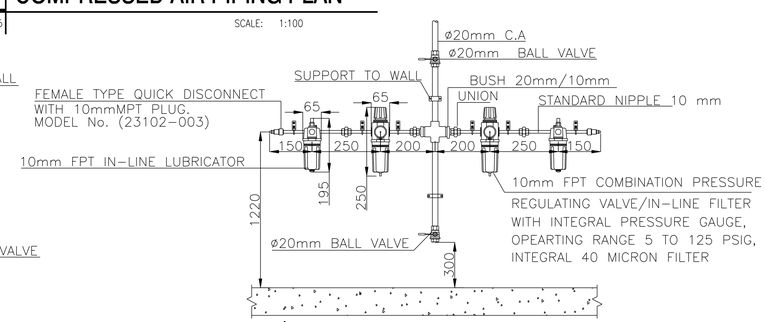

3 COMPRESSED AIR DROP DETAIL

PP-P-05 SCALE: N.T.S

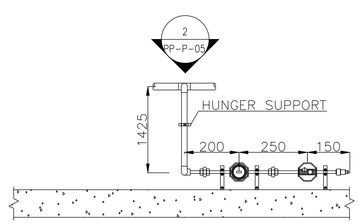

4 TYPICAL DETAIL

PP-P-05 SCALE: N.T.S

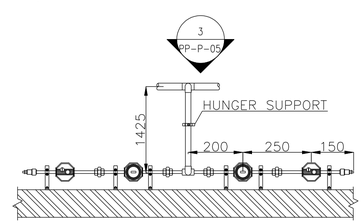

5 TYPICAL DETAIL

PP-P-05 SCALE: N.T.S

NOTES:

1. SEE SHEET CO-P-01 & CO-P-02 & CO-P-07 FOR SYMBOLS, ABBREVIATIONS, GENERAL NOTES AND EQUIPMENT SCHEDULES.
2. FOR COMPRESSOR DETAIL SEE SHEET CO-P-03 .
3. GALVANIZED STEEL PIPES ASTM A53/A 53/M TYPES, GRADE B FOR COMPRESSED AIR SYSTEM.
4. PIPE FITTING SHALL BE COMPATIBLE WITH THE APPLICABLE PIPE MATERIALS.
5. CARBON STEEL PIPE UNIONS, SOCKET-WELDING AND THREADED,MSS SP-83.
6. NIPPLES/PIPE THREADED ASTM A733.

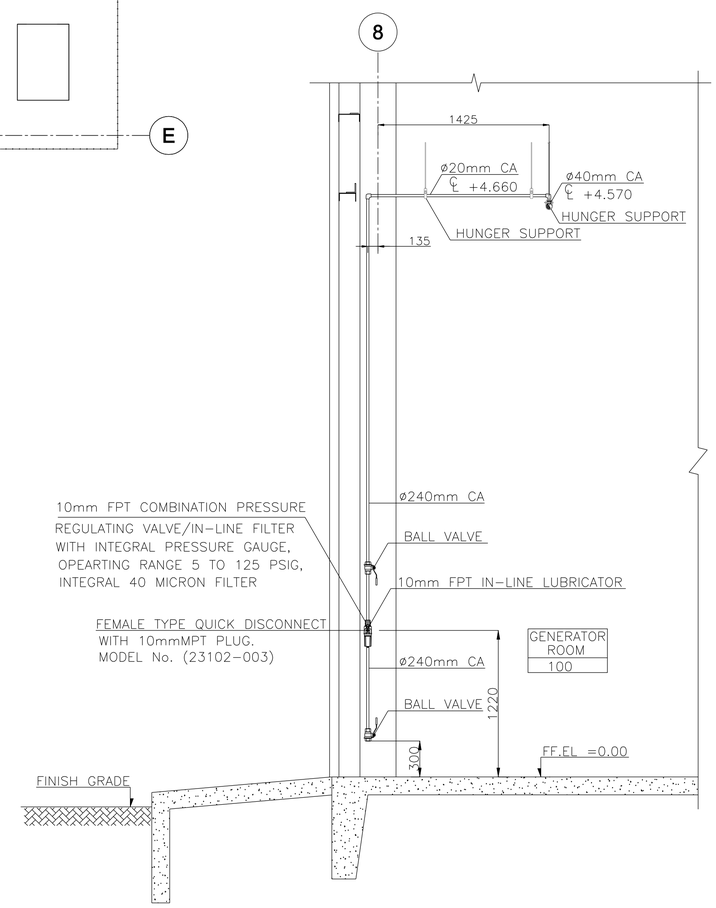

6 SECTION

PP-P-05 SCALE: 1:25

1:100 1:25

SYMBOL	DESCRIPTION	DATE	APR

DESIGNED BY: HANAN E. | DATE: 06-27-07
DWN BY: HANAN M. | SUBMITTED BY: R. CREWAL, CHIEF, BLDG SYSTEMS
CHK BY: G.TAWAB | FILE NO.: AF0707PP-P-05

US Army Corps of Engineers Transatlantic Programs Center

ANA REGIONAL BRIGADE
PAKTIKA, AFGHANISTAN

POWER PLANT
COMPRESSED AIR PIPING PLAN AND DETAILS

SHEET REFERENCE NUMBER:
PP-P-05

$(getvar, "dwgprefix")$(getvar, "dwgname")$(edtime, O, MON DD", YYYY - HHMMam/pm)

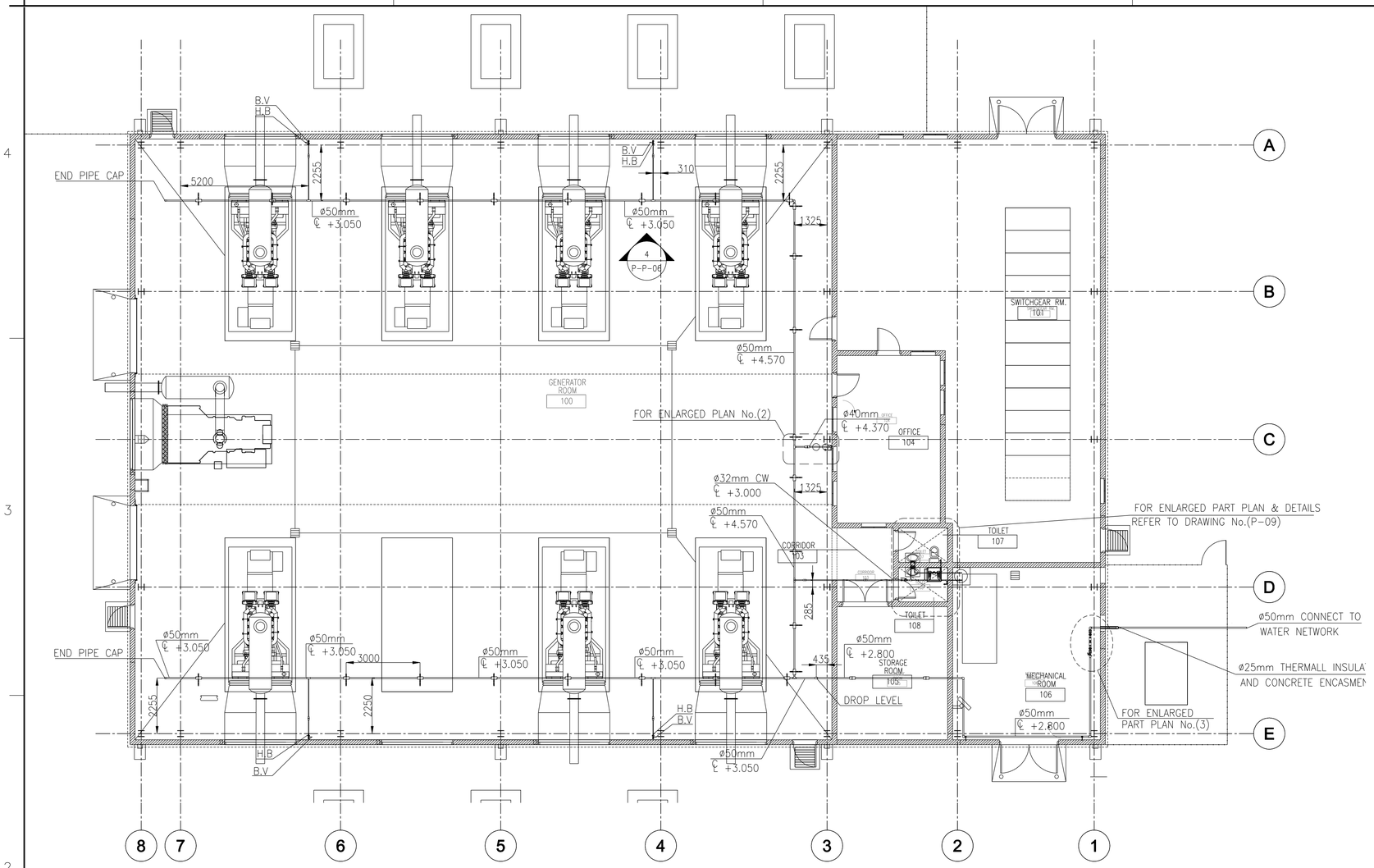

1 COLD WATER PIPING PLAN

PP-P-06 SCALE: 1:100

NOTES:

1. LEVELS REFERRED TO 0.00 LEVEL OF (F.F.L.).
2. ALL DIMENSIONS IN (mm) AND LEVELS ARE IN METERS UNLESS OTHERWISE INDICATED.
3. DIMENSIONS AND LEVELS ARE TO NEAREST 5mm.
4. ISOLATION VALVES WILL BE PROVIDED FOR ALL PLUMBING FIXTURES.
5. GALVANIZED STEEL PIPES FOR COLD & HOT WATER PIPE ACCORDANCE WITH ASTM A 53/A 53M, TYPE S, GRADE B FOR ABOVE GROUND ONLY.
6. DEPTH OF WATER PIPE SHOULD BE 900mm MIN. FROM THE TOP OF PIPE TO THE EXISTING GROUND OR THE INDICATED FINISHED GRADE.
7. PIPE FITTING MALLEABLE IRON ACCORDANCE WITH ANSI B16.3, CLASS 150.
8. THERMAL INSULATION FLEXIBLE CELLULAR TYPE 1 OR 2 FOR COLD WATER PIPE.
9. PLUMBING FIXTURE AND EMERGENCY SHOWER W/EYE/FACE WASH. SEE SPECIFICATION 15400.

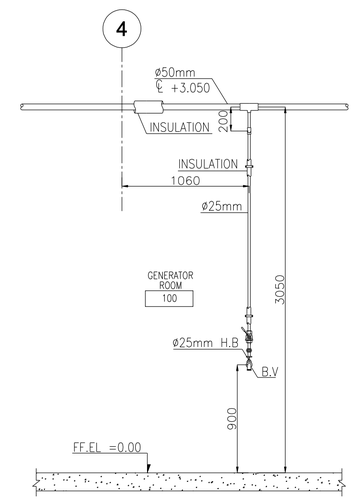

4 VIEW

PP-P-06 SCALE: 1:25

DESIGN NOTES

P-7 – EMERGENCY SHOWER W/ EYE/FACE WASH, A FULLY ASSEMBLED, READY TO INSTALL,

SHOWER

HEAD – 250mm ABS PLASTIC IN SAFETY GREEN;
ACTIVATION – RIGID STAINLESS STEEL PULL ROD;
FLOW CONTROL – 4.5 CMH
JACKET – SAFETY GREEN, UV RESISTANT;

EYE/FACE WASH

HEADS – TWIN FEATHER-FLO ABS PLASTIC EYE/FACE WASH HEADS;
ACTIVATION – STAINLESS STEEL PUSH FLAG;
HOSE – HEAVY DUTY UV RESISTANT 1200mm LENGTH

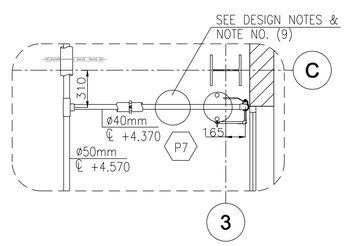

2 ENLARGED PART PLAN EMERGENCY SHOWER W/EYE/FACE WASH

PP-P-06 SCALE: 1:25

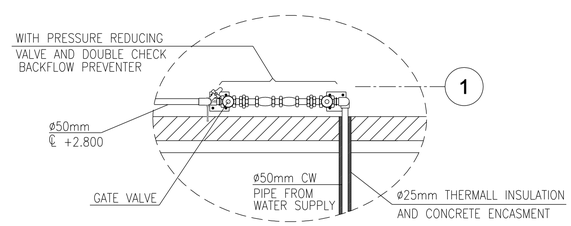

3 ENLARGED PART PLAN WATER SERVICE ENTRANCE DETAILS

PP-P-06 SCALE: 1:25

SYMBOL	DESCRIPTION	DATE	APR

DESIGNED BY: HANAN, E. DATE: 06-27-07
DWN BY: HANAN, M. SUBMITTED BY: R. CRESWAL CHIEF POTD BLDG SYSTEMS
CHK BY: G.TAWAB FILE NO.: AF0707PP-P-06

US Army Corps of Engineers Transatlantic Programs Center

ANA REGIONAL BRIGADE
PAKTIKA, AFGHANISTAN

POWER PLANT
COLD WATER PIPING PLAN AND DETAILS

1 0 1 2 3 4 5 6 7 8 9
1:100
1 .50 0 1 1.5
1:25

SHEET REFERENCE NUMBER:
PP-P-06

$(getvar, "dwgprefix")$(getvar, "dwgname")$(edtime, 0, MON DD"," YYYY - HH:MMam/pm)

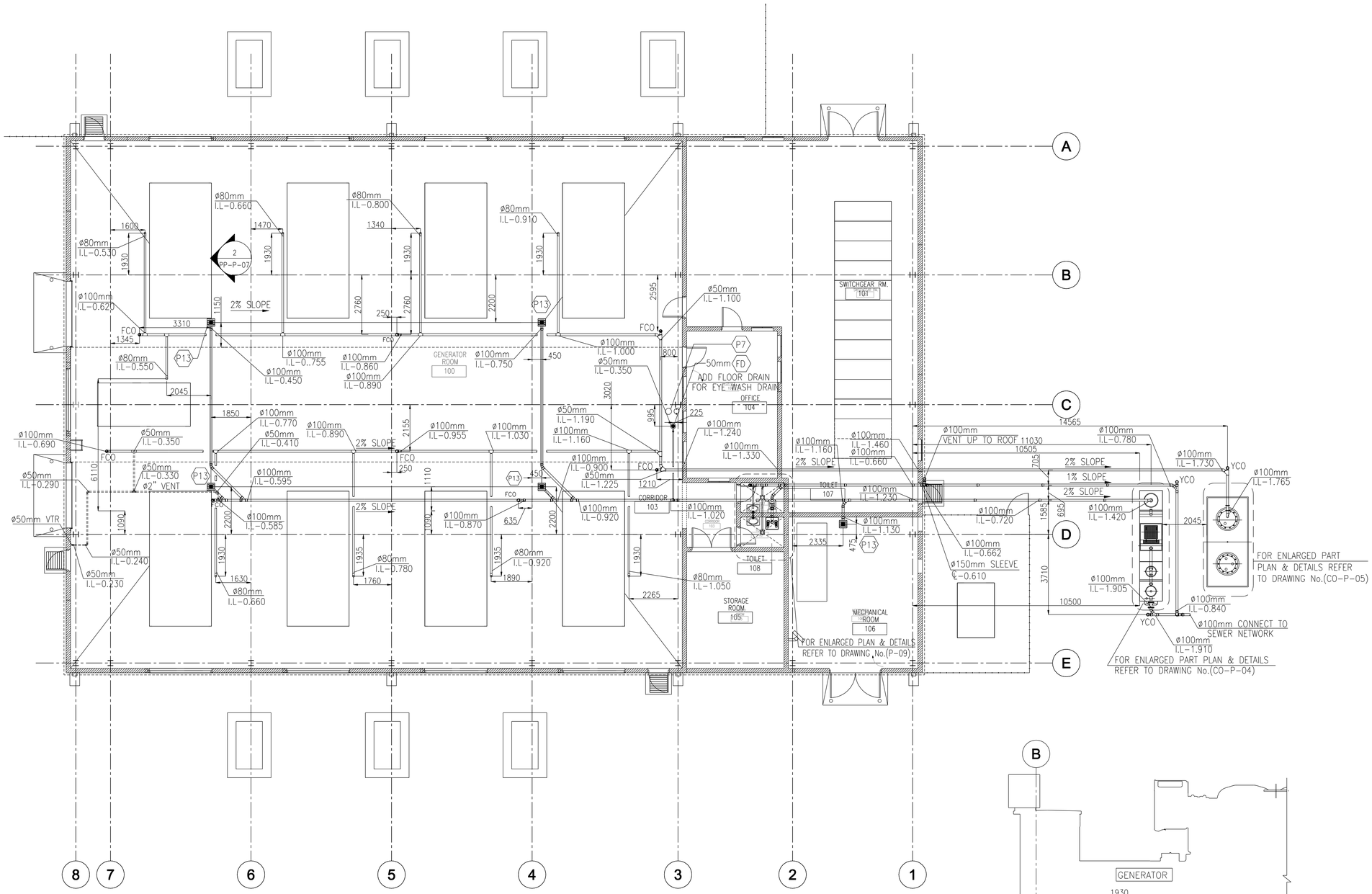

1 WASTE OIL & WASTE WATER PIPING PLAN

PP-P-07 SCALE: 1:100

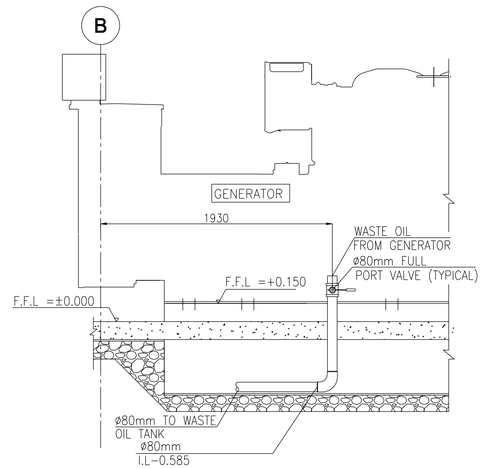

2 VIEW

PP-P-07 SCALE: 1:25

NOTES:

1. LEVELS REFERRED TO 0.00 LEVEL OF (F.F.L.) .
2. ALL DIMENSIONS IN (mm) AND LEVELS ARE IN METERS UNLESS OTHERWISE INDICATED.
3. DIMENSIONS AND LEVELS ARE TO NEAREST 5mm.
4. INTERIOR SOIL AND WASTE PIPING 80mm AND SMALLER SHALL BE ROUTED WITH A 2% SLOPE.
5. EXTERIOR SOIL OR WASTE PIPING SHALL BE ROUTED WITH A 2% SLOPE WHEREVER POSSIBLE, OTHERWISE A MINIMUM SLOPE OF 1 % SHALL BE USED.
6. POLYVINYL CHLORIDE PLASTIC MATERIAL FOR DRAINGE WASTE WATER, VENT PIPES AND FITTINGS ASTM D2665, DIN 8061 OR DIN 8062 STANDARD.
7. WASTE OIL PIPE & FITTING MATERIALS ARE CARBON STEEL PIPE SHALL BE IN ACCORDANCE WITH ASTM A 53/A 53M, TYPE E OR S, SEAMLESS OR ELECTRIC-WELD, GRADE B. PIPE 65mm AND LARGER SHALL BE SCHEDULE 40.

SYMBOL	DESCRIPTION	DATE	APR

DESIGNED BY: HAMAX E.
DWN BY: HAMXM.
CHK BY: G.TAWAB
DATE: 06-27-07
SUBMITTED BY: R. CREWAL CHIEF, BLDG SYSTEMS
FILE NO.: AF0707 PP-P-07

US Army Corps of Engineers Transatlantic Programs Center

ANA REGIONAL BRIGADE
PAKTIKA, AFGHANISTAN

POWER PLANT
WASTE OIL & WASTE WATER PIPING PLAN AND DETAILS

SHEET REFERENCE NUMBER:
PP-P-07

1:100

$(getvar, "dwgprefix")$(getvar, "dwgname")$(edtime, 0, MON DD,"", YYYY - H:MMam/pm)

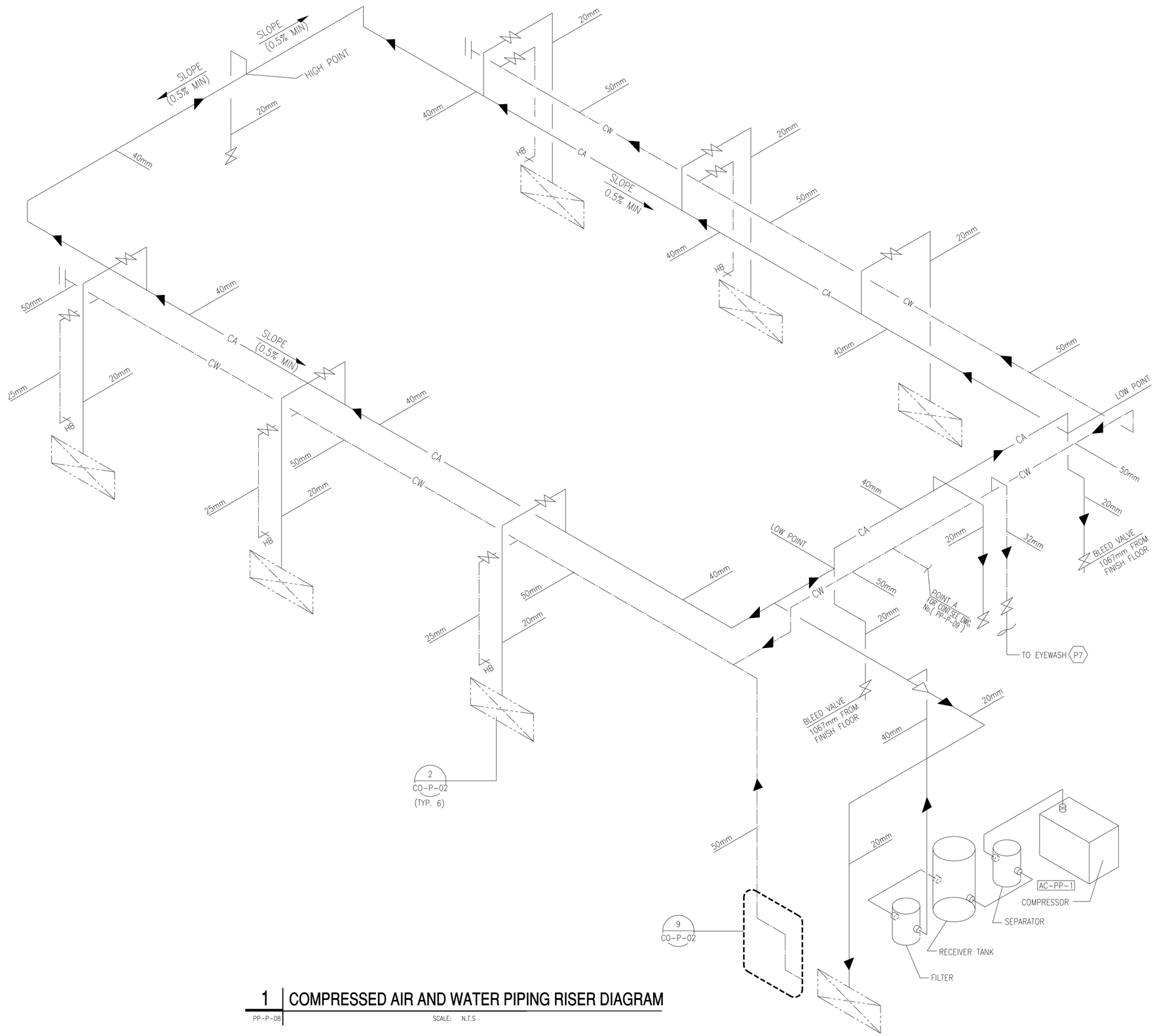

1 COMPRESSED AIR AND WATER PIPING RISER DIAGRAM

PP-P-08

SCALE: N.T.S

NOTES:

1. LEVELS REFERRED TO 0.00 LEVEL OF(F.F.L.).
2. ALL DIMENSIONS IN (mm) AND LEVELS ARE IN METERS UNLESS OTHERWISE INDICATED.
3. DIMENSIONS AND LEVELS ARE TO NEAREST 5mm.
4. INTERIOR SOIL AND WASTE PIPING 80mm AND SMALLER SHALL BE ROUTED WITH A 2% SLOPE.
5. EXTERIOR SOIL OR WASTE PIPING SHALL BE ROUTED WITH A 2% SLOPE WHEREVER POSSIBLE, OTHERWISE A MINIMUM SLOPE OF 1 % SHALL BE USED.
6. POLYVINYL CHLORIDE PLASTIC MATERIAL FOR DRAINGE WASTE WATER, VENT PIPES AND FITTINGS ASTM D2665, DIN 8061 OR DIN 8062 STANDARD.
7. WASTE OIL PIPE & FITTING MATRIALS ARE CARBON STEEL PIPE SHALL BE IN ACCORDANCE WITH ASTM A 53/A 53M, TYPE E OR S, SEAMLESS OR ELECTRIC-WELD, GRADE B. PIPE 65mm AND LARGER SHALL BE SCHEDULE 40.

SYMBOL	DESCRIPTION	DATE	APR

DESIGNED BY: HANNY. E.
DATE: 06-27-07
DWN BY: HANNY. M.
SUBMITTED BY: R. CRENWAL CHIEF POWER BLDG SYSTEMS
CHK BY: G.TAWWAB
FILE NO.: AF0707PP-P-08

US Army Corps of Engineers Transatlantic Programs Center

ANA REGIONAL BRIGADE
PAKTIKA, AFGHANISTAN

POWER PLANT
COMPRESSED AIR AND WATER PIPING RISER DIAGRAM

SHEET REFERENCE NUMBER:
PP-P-08

$(getvar, "dwgprefix")$(getvar, "dwgname")$(edtime, O, MON DD", YYYY - H:MMam/pm)

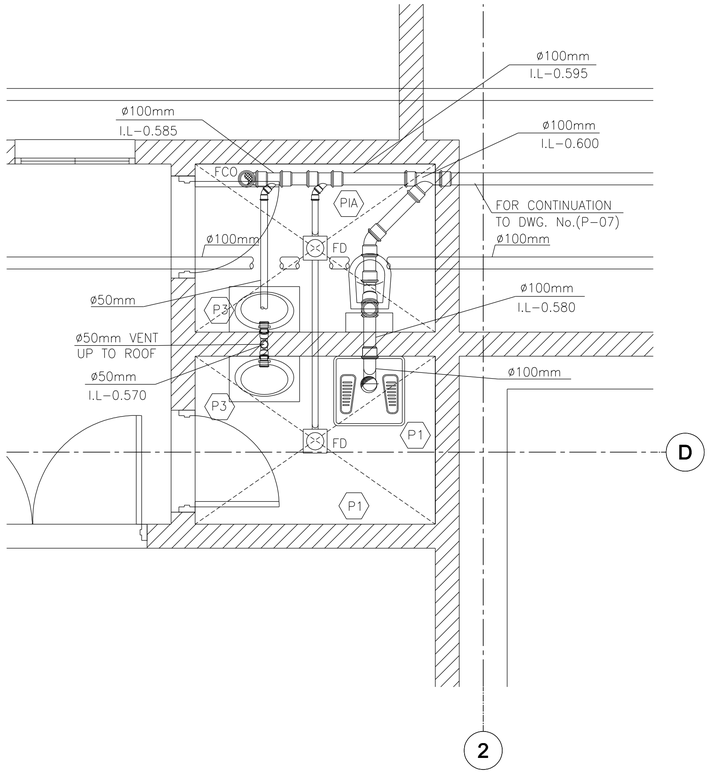

1 DRAINAGE AND VENT PIPING LAYOUT

PP-P-08 SCALE: 1:25

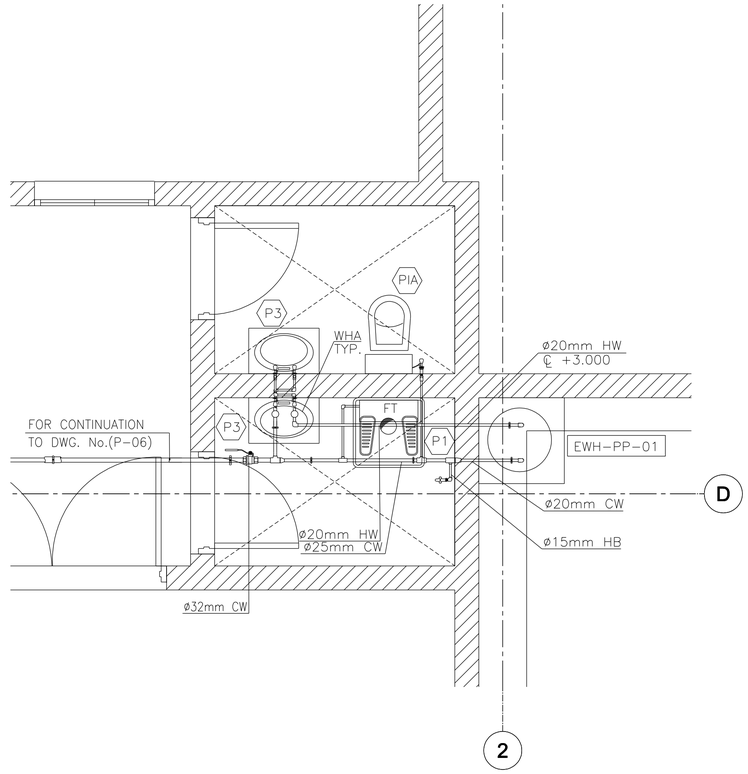

2 WATER PIPING LAYOUT

PP-P-08 SCALE: 1:25

NOTE:

1. SEE SHEET CO-P-01 & CO-P-02 & CO-P-07 FOR SYMBOLS, ABBREVIATIONS, GENERAL NOTES AND EQUIPMENT SCHEDULES.

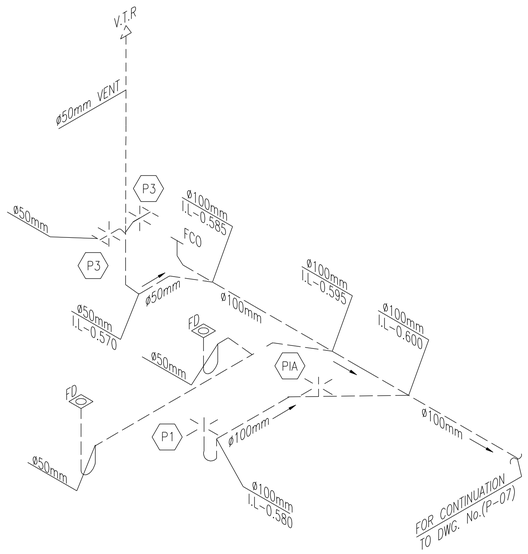

3 DRAINAGE AND VENT RISER DIAGRAM

PP-P-08 SCALE: N.T.S

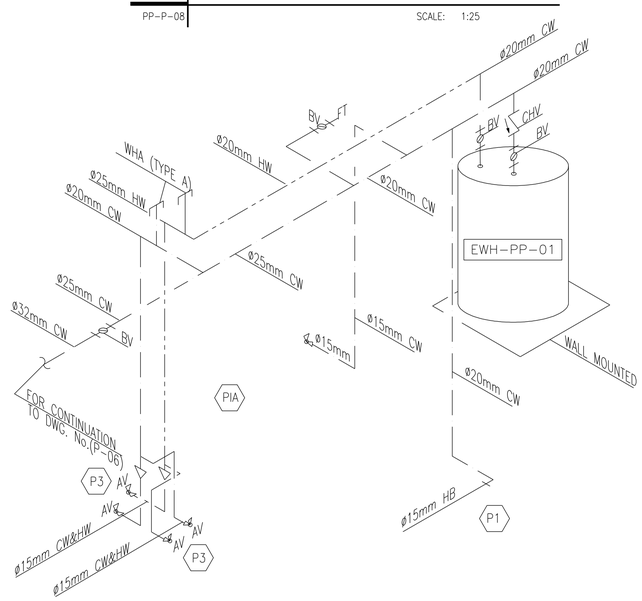

4 WATER PIPING RISER DIAGRAM

PP-P-08 SCALE: N.T.S

1 .50 0 1 1.5
1:25

SYMBOL	DESCRIPTION	DATE	APR

DESIGNED BY: HANAN, E.
DATE: 06-27-07
DWN BY: HANY M.
SUBMITTED BY: R. CREWAL, CHIEF, PROJ. MGT. BLDG SYSTEMS
CHK BY: G.TAWAB
FILE NO.: AF0707 PP-P-09

US Army Corps of Engineers
Transatlantic Programs Center

ANA REGIONAL BRIGADE
PAKTIKA, AFGHANISTAN

POWER PLANT
TOILET 107 & 108
PLUMBING PLAN & RISER DIAGRAM

SHEET REFERENCE NUMBER:
PP-P-09

$(getvar, "dwgprefix")$(getvar, "dwgname")$(edtime, O, MON DD", " YYYY - HH:MMam/pm)

NOTES:

1. PROVIDE REFUELING POINT ADJACENT TO EXTERIOR PERIMETER WALL AND NEAR A GUARD TOWER SO TANKER DOES NOT HAVE TO ENTER BASE.
2. PROVIDE HAEVY-DUTY HASP AND LOCKS AT ALL FUEL STORAGE TANKS AND OPENINGS.
3. CONTRACTOR SHALL REFILL ALL TANKS FULL AFTER TESTING AND BEFORE PROJECT TURN-OVER.

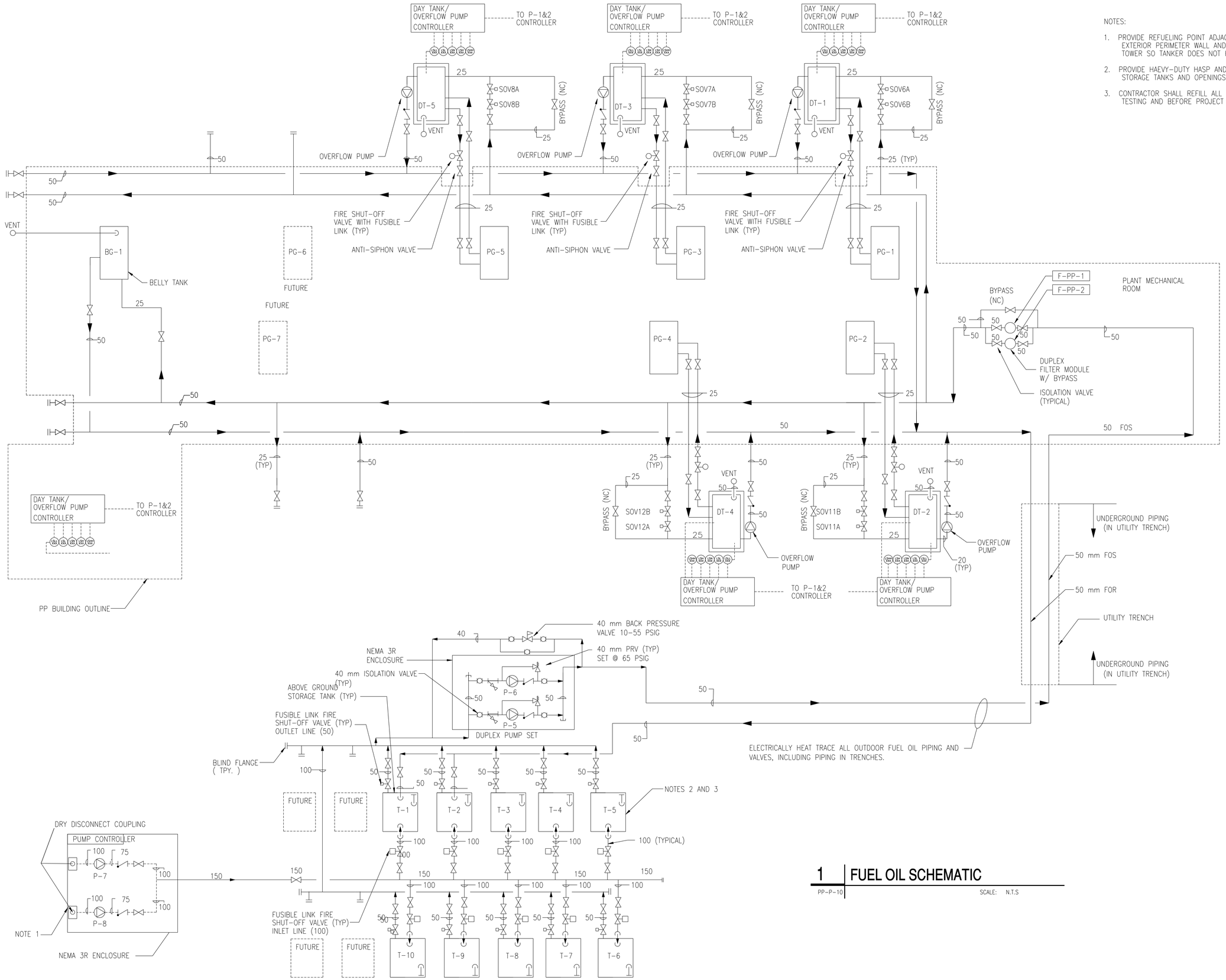

1 FUEL OIL SCHEMATIC

PP-P-10

SCALE: N.T.S

SYMBOL	DESCRIPTION	DATE	APR

DESIGNED BY: HANAK E.
DATE: 06-27-07
DWN BY: HANK M.
SUBMITTED BY: R. GREWAL CHIEF, PDT BLDG SYSTEMS
CHK BY: G.TAWAB
FILE NO.: AF0707PP-P-10

US Army Corps of Engineers Transatlantic Programs Center

ANA REGIONAL BRIGADE
PAKTIKA, AFGHANISTAN

POWER PLANT
FUEL OIL SCHEMATIC

SHEET REFERENCE NUMBER:
PP-P-10

$(getvar, "dwgprefix")$(getvar, "dwgname")$(edtime, 0, MON DD", YYYY - HHMMam/pm)

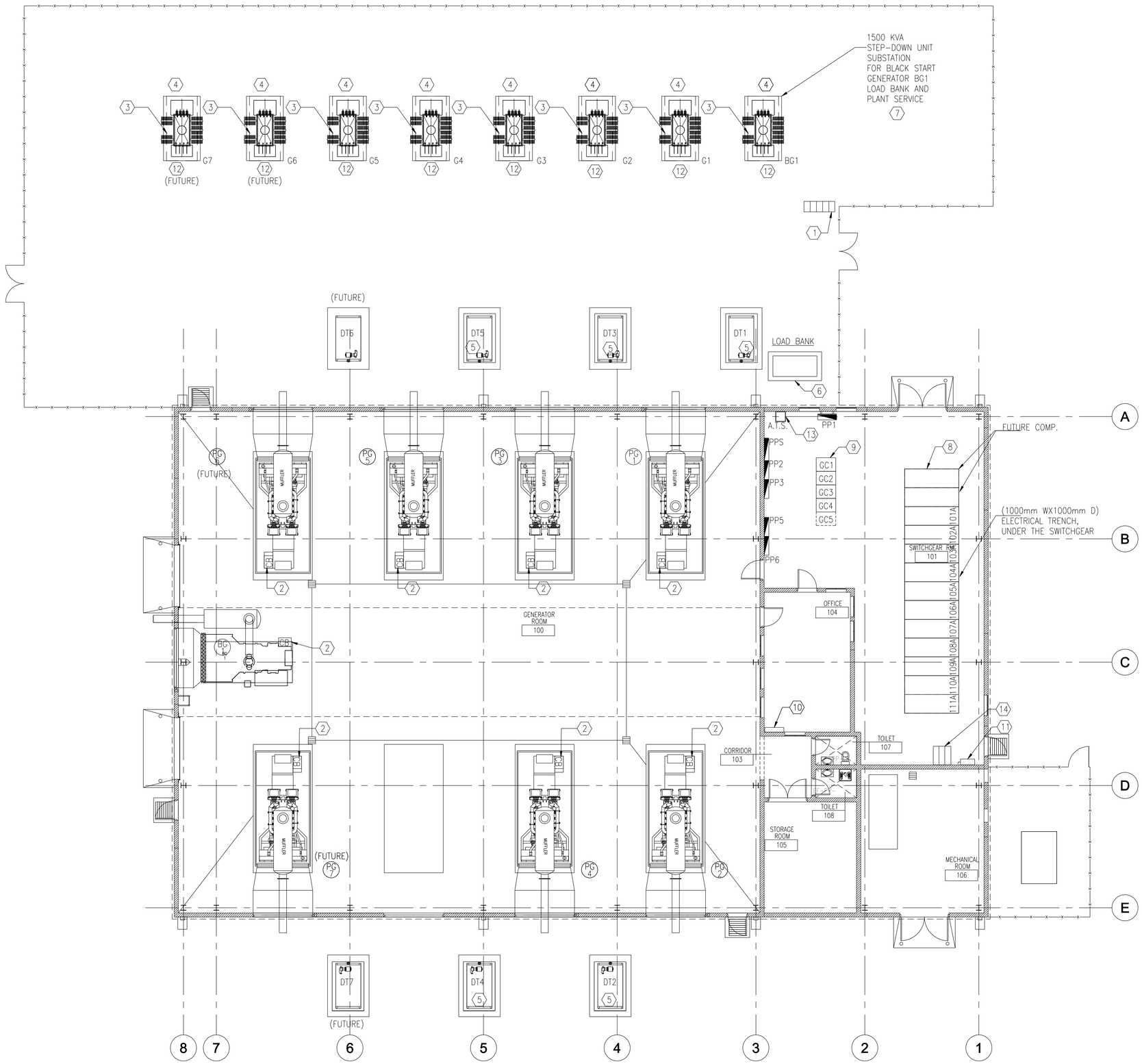

GENERAL NOTE

1. NEMA 3R, 2500A ,380V,50HZ,5W SWITCHBOARD
2. GENERATOR OUTPUT MAIN CIRCUIT BREAKER.
3. SUBSTATION STYLE 1500KVA PAD MOUNTED STEP-UP TRANSFORMER, MINERAL OIL FILLED, FORCED FAN COOLED. PRIMARY 380/220V WYE 50HZ, SECONDARY
4. AIR TERMINAL COMPARTMENT FOR TERMINATION OF 15KV PRIMARY FEEDER CABLE TO 15 KV SWITCHGEAR, NEMA 3R ENCLOSED STRIP HEATER AND THERMOSTAT.
5. PAD MOUNTED DAY TANK WITH FUEL OIL RETURN PUMP AND HEATER.
6. PAD MOUNTED 1000KW RESISTIVE LOAD BANK, 380/220V, 50HZ, OVERCURRENT PROTECTIVE DEVICE, CONTROLS, ETC.
7. SUBSTATION STYLE 1500KVA PAD MOUNTED STEP-DOWN TRANSFORMER, MINERAL OIL FILLED, FORCED FAN COOLER FOR LOAD BANK, GENERATOR BG1 AND PLANT SERVICE 380 / 220V WYE 50HZ , SECONDARY
8. PAD MOUNTED 15KV MEDIUM VOLTAGE SWITCHGEAR PP-SWBD1.
9. PAD MOUNTED GENERATOR CONTROL SWITCHBOARD PP-GC.
10. ALARM ANNUNCIATION PANEL FOR FUEL OIL AND WASTE OIL SYSTEM.
11. 3PH , 50A DISCONNECT SWITCH FOR BATTERY CHARGER OR AS PER MANUFACTURER REQUIREMENTS .
12. SECONDARY SIDE AIR TERMINAL CHAMBER WITH HANGED DOOR
13. 3P, 800A, 380/220V AUTOMATIC TRANSFER SWITCH WITH MANUAL BY-PASS FEATURE.
14. 48VDC OPEN BATTERY RACK WITH DISPLAY PANEL FOR SWITCHGEAR

DESCRIPTION	
PG 1	PRIME POWER PLANT GENERATOR No. 1
PG 2	PRIME POWER PLANT GENERATOR No. 2
PG 3	PRIME POWER PLANT GENERATOR No. 3
PG 4	PRIME POWER PLANT GENERATOR No. 4
PG 5	PRIME POWER PLANT GENERATOR No. 5
PG 6	FUTURE PRIME POWER PLANT GENERATOR No. 6
PG 7	FUTURE PRIME POWER PLANT GENERATOR No. 7
BG 1	BLACK START GENERATOR

1 ELECTRICAL EQUIPMENT PLAN

PP-E-01 SCALE: 1:100

1:100 DRAWING NOT TO SCALE

SYMBOL	DESCRIPTION	DATE	APR

DESIGNED BY: XXX
DATE: 06-27-07
DWN BY: XXX
SUBMITTED BY: R. CRESWAL CHIEF, PDT BLDG SYSTEMS
CHK BY: XXX
FILE NO.: AF0707O-PP-E-01

US Army Corps of Engineers Transatlantic Programs Center

ANA REGIONAL BRIGADE
PAKTIKA, AFGHANISTAN

POWER PLANT
ELECTRICAL EQUIPMENT PLAN

SHEET REFERENCE NUMBER:
PP-E-01

$(getvar, "dwgprefix")$(getvar, "dwgname")$(edtime, O, MON DD", YYYY - HH:MMam/pm)

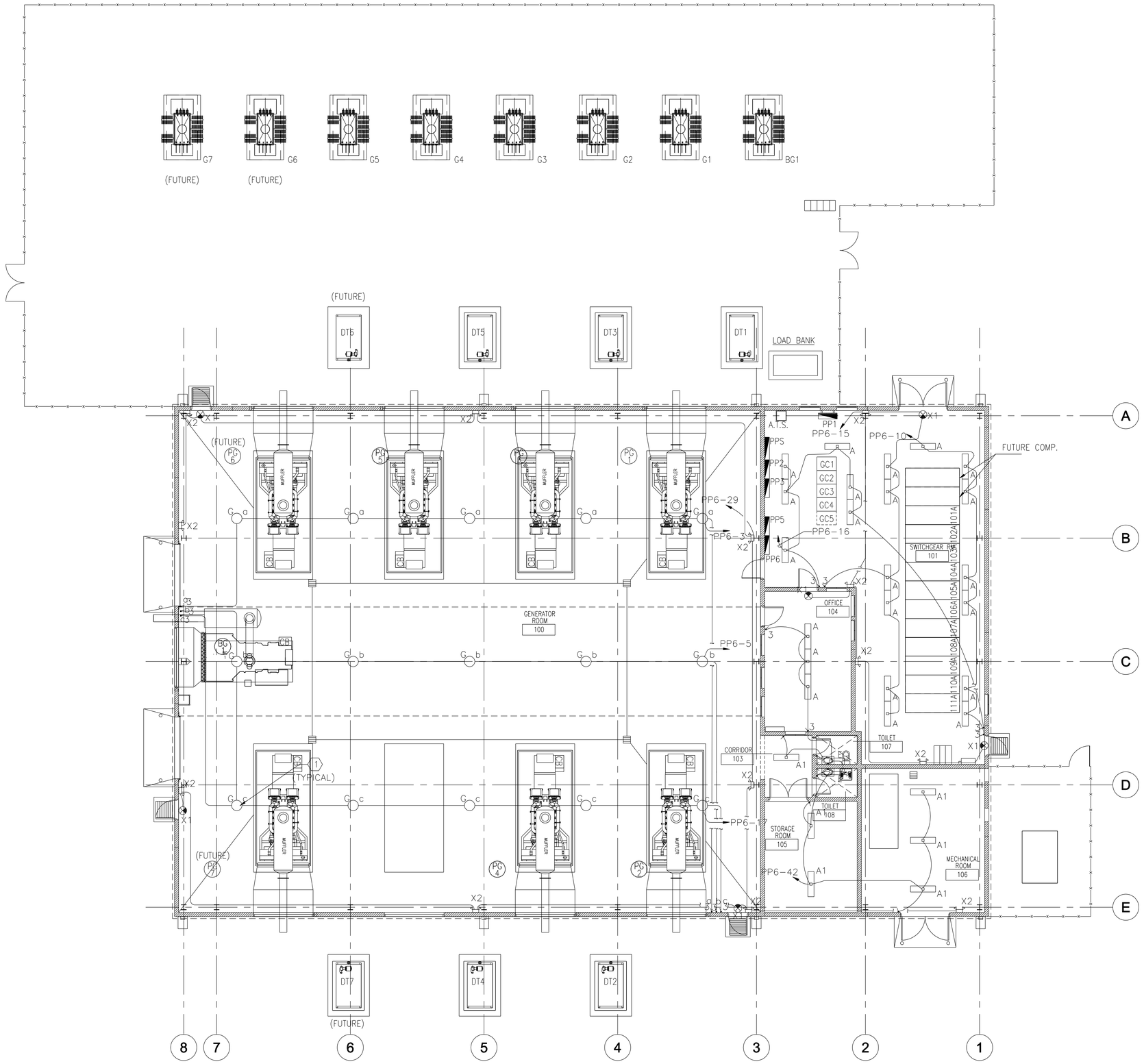

1 ELECTRICAL LIGHTING PLAN

PP-E-02

SCALE: 1:100

NOTES:

1. SEE SHEET CO-E-01 FOR SYMBOLS, ABBREVIATIONS AND GENERAL NOTES.
2. SEE DWG PP-E-01 FOR EQUIPMENT NOTES.
3. SEE DRAWING CO-E-02 FOR LIGHTING FIXTURE SCHEDULE.
4. ALL INSTALLATIONS SHALL BE CONSTRUCTED FOR SEISMIC ZONE. (UBC 2003)

KEYED NOTE:

(1) MOUNTING ELEVATION FOR THE BOTTOM OF LIGHTING FIXTURE SHALL BE APPROX. 5000mm ABOVE FINISHED FLOOR.

1 0 1 2 3 4 5 6 7 8 9
1:100 DRAWING NOT TO SCALE

SYMBOL	DESCRIPTION	DATE	APR

DESIGNED BY: XXX
DWN BY: XXX
CHK BY: XXX
DATE: 06-27-07
SUBMITTED BY: R. CREWAL CHIEF, PDT BLDG SYSTEMS
FILE NO.: AF0707 O-PP-E-02

US Army Corps of Engineers Transatlantic Programs Center

ANA REGIONAL BRIGADE
PAKTIKA, AFGHANISTAN

POWER PLANT
ELECTRICAL LIGHTING PLAN

SHEET REFERENCE NUMBER:
PP-E-02

$(getvar, "dwgprefix")$(getvar, "dwgname")$(edtime, 0, MON DD",", YYYY - H:MMam/pm)

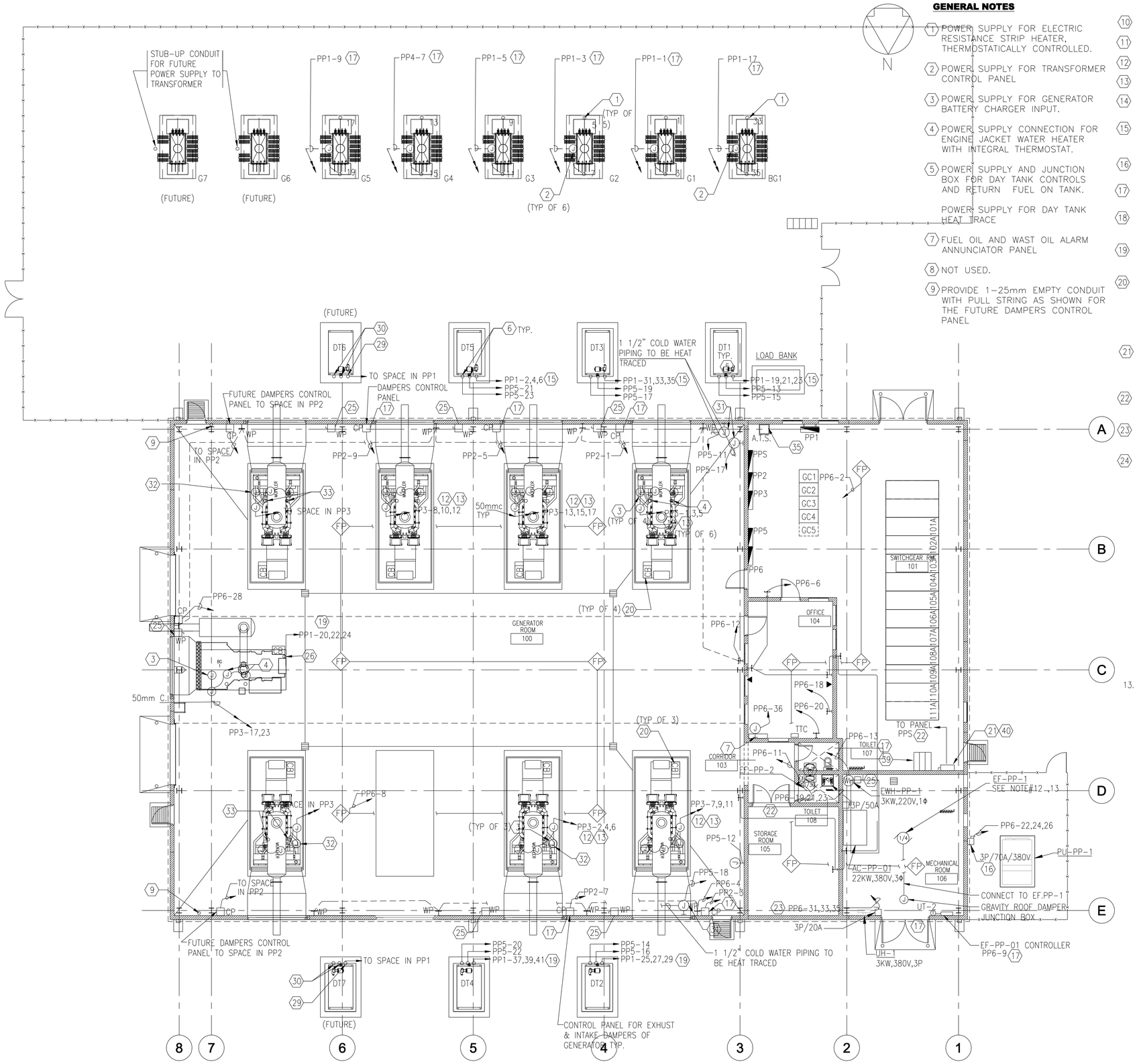

GENERAL NOTES

1. POWER SUPPLY FOR ELECTRIC RESISTANCE STRIP HEATER, THERMOSTATICALLY CONTROLLED.
2. POWER SUPPLY FOR TRANSFORMER CONTROL PANEL
3. POWER SUPPLY FOR GENERATOR BATTERY CHARGER INPUT.
4. POWER SUPPLY CONNECTION FOR ENGINE JACKET WATER HEATER WITH INTEGRAL THERMOSTAT.
5. POWER SUPPLY AND JUNCTION BOX FOR DAY TANK CONTROLS AND RETURN FUEL ON TANK.

   POWER SUPPLY FOR DAY TANK HEAT TRACE
7. FUEL OIL AND WAST OIL ALARM ANNUNCIATOR PANEL
8. NOT USED.
9. PROVIDE 1–25mm EMPTY CONDUIT WITH PULL STRING AS SHOWN FOR THE FUTURE DAMPERS CONTROL PANEL
10. NOT USED
11. NOT USED
12. 2(2–1/Cx16mm² Cu) } + 6mm² Cu GND) INSIDE 50mm C
13. (2–1/Cx6mm² Cu)
14. NOT USED
15. 3[(2–1/Cx4mm²+4mm²Cu–GRD)] INSIDEø25mm CONDUIT
16. PROVIDE 3P, 50A, N.F.D.S IN A NEMA 3R ENCLOSURE.
17. (2–1/CX4mm² Cu+4mm² CuGND) INSIDE 25mm C
18. (2–1/CX6mm² Cu+6mm² CuGND) INSIDE 25mm C
19. 3[(2–1/CX6mm²+6mm²cu–GND) INSIDEø32mm CONDUIT
20. UNIT MOUNTED 3P, 2500A, 600V, ENCLOSED CIRCUIT BREAKER WITH GROUND FAULT SHUNT TRIP AUXILIARY CONTACTS, NEUTRAL AND GROUND BUSSES.
21. PROVIDE 3P, 60A, 600V F.D.S. FOR D.C. SYSTEM (OPEN BATTERY RACK) OUTPUT.
22. (4–1/C – 16mm² + 16mm² GRD) IN 32mm C.
23. (4–1/Cx6mm² Cu + 4mm² Cu GND) INSIDE 25mm C
24. (4–1/Cx4mm² Cu + 4mm² Cu GND) INSIDE 25mm C
25. PROVIDE 1P, 30A, 220V N.F.D.S. IN A NEMA 1 ENCLOSURE.
26. UNIT MOUNTED 3P, 800A, 600V ENCLOSED CIRCUIT BREAKER WITH GROUND FAULT SHUNT TRIP AUXILIARY CONTACTS, NEUTRAL AND GROUND BUSSES.
27. NOT USED.
28. NOT USED.
29. 1.5m FROM BLDG WALL, STUB UP AND CAP AT BOTH ENDS 1–25mm EMPTY CONDUITS EACH WITH PULL STRING, FOR FUTURE POWER SUPPLY TO DAY TANK HEATER AND CONTROL FED FROM PANEL PP1
30. 1.5m FROM BLDG WALL, STUB UP AND CAP AT BOTH ENDS 1–25mm EMPTY CONDUITS EACH WITH PULL STRING, FOR FUTURE POWER SUPPLY TO DAY TANK HEATER AND CONTROL FED FROM PANEL PP5
31. J.B. FOR PIPING HEAT TRACE POWER SUPPLY CONNECTION 220V, 1ø.
32. PROVIDE AND STUB UP AND CAP AT BOTH ENDS 25mm EMPTY CONDUIT TO SWITCHGEAR RM FOR FUTURE POWER SUPPLY TO BATTERY CHARGER.
33. PROVIDE AND STUB UP 25mm EMPTY CONDUIT FOR FUTURE POWER SUPPLY TO ENGINE JACKET WATER HEATER.
34. NOT USED
35. 3P, 800A, 380/220V AUTOMATIC TRANSFER SWITCH WITH MANUAL BY–PASS FEATURE.
36. NOT USED.
37. NOT USED.
38. NOT USED.
39. 48 VDC OPEN BATTERY RACK AND BATTERY SIZED AND PROVIDED BY SWITCHGEAR MANUFACTURER.
40. BATTERY CHARGER PROVIDED AND SIZED BY SWITCHGEAR MANUFACTURER.
41. NOT USED
42. (3–1/C–10mm²+10mm²CU–GRD) INSIDE 40mm C

13. THE EXHAUST FAN SHALL BE EQUIPED WITH DISCONNECT SWITCH FOR MAINTENANCE

NOTES:

1. SEE DWG CO–E–01 FOR SYMBOLS AND ABBREVIATIONS.
2. SEE DWG PP–E–01 FOR EQUIPMENT NOTES.
3. MINIMUM UNDERGROUND CONDUIT SIZE SHALL BE 25mm. UNLESS OTHERWISE SPECIFIED.
4. UNLESS OTHERWISE SPECIFIED, CONDUCTORS SHALL BE 4mm Cu WITH 4mm² CU GND INSIDE 25mm ²C.
5. UNDERGROUND BANKS SHALL BE INSTALLED AT 450mm MINIMUM BELOW GRADE. MEDIUM VOLTAGE (15KV) BANKS SHALL BE AT LOWER DEPTH AS REQUIRED TO AVOID 600V CONDUITS INTERFERENCE.
6. CONTRACTOR SHALL FURNISH & INSTALL SPACERS FOR CONDUITS SEPARATION & TO KEEP BANKS ALIGNED DURING EARTH COVER PLACEMENT.
7. FOR MOTORIZED DAMPER/LOUVER SEQUENCE OF OPERATION SEE DWG PP–M–04
8. FOR DAMPER LOCATIONS SEE MECHANICAL LAYOUT DRAWINGS. ALL INSTALLATIONS SHALL BE
9. CONSTRUCTED FOR SEISMIC ZONE 4 (UBC, 2003).
10. EVERY CIRCUIT SHALL HAVE A DEDICATED NEUTRAL & COMMON GROUND IN CONDUIT.
11. PROVIDE FIRE ALARM PULL BOXES , FOR FUTURE SELF SMOKE DETECTOR CONDUITS AND WIRING FOR FUTURE INSTALLATION OF SMOKE ALARMS
12. SEE DETAIL#1 IN DWG# PP–E–16

1 0 1 2 3 4 5 6 7 8 9
DRAWING NOT TO SCALE
1:100

1 ELECTRICAL POWER PLAN

PP–E–03 SCALE: 1:100

SYMBOL	DESCRIPTION	DATE	APR

DESIGNED BY: XXX
DATE: 06-27-07
DWN BY: XXX
SUBMITTED BY: R. CRESWELL CHIEF, BLDG SYSTEMS
CHK BY: XXX
FILE NO.: AF07070-PP-E-03

US Army Corps of Engineers Transatlantic Programs Center

ANA REGIONAL BRIGADE
PAKTIKA, AFGHANISTAN

POWER PLANT
ELECTRICAL POWER AND TELEPHONE PLAN

SHEET REFERENCE NUMBER:
PP–E–03

$(getvar, "dwgprefix")$(getvar, "dwgname")$(edtime, 0, MON DD", YYYY – HHMMam/pm)

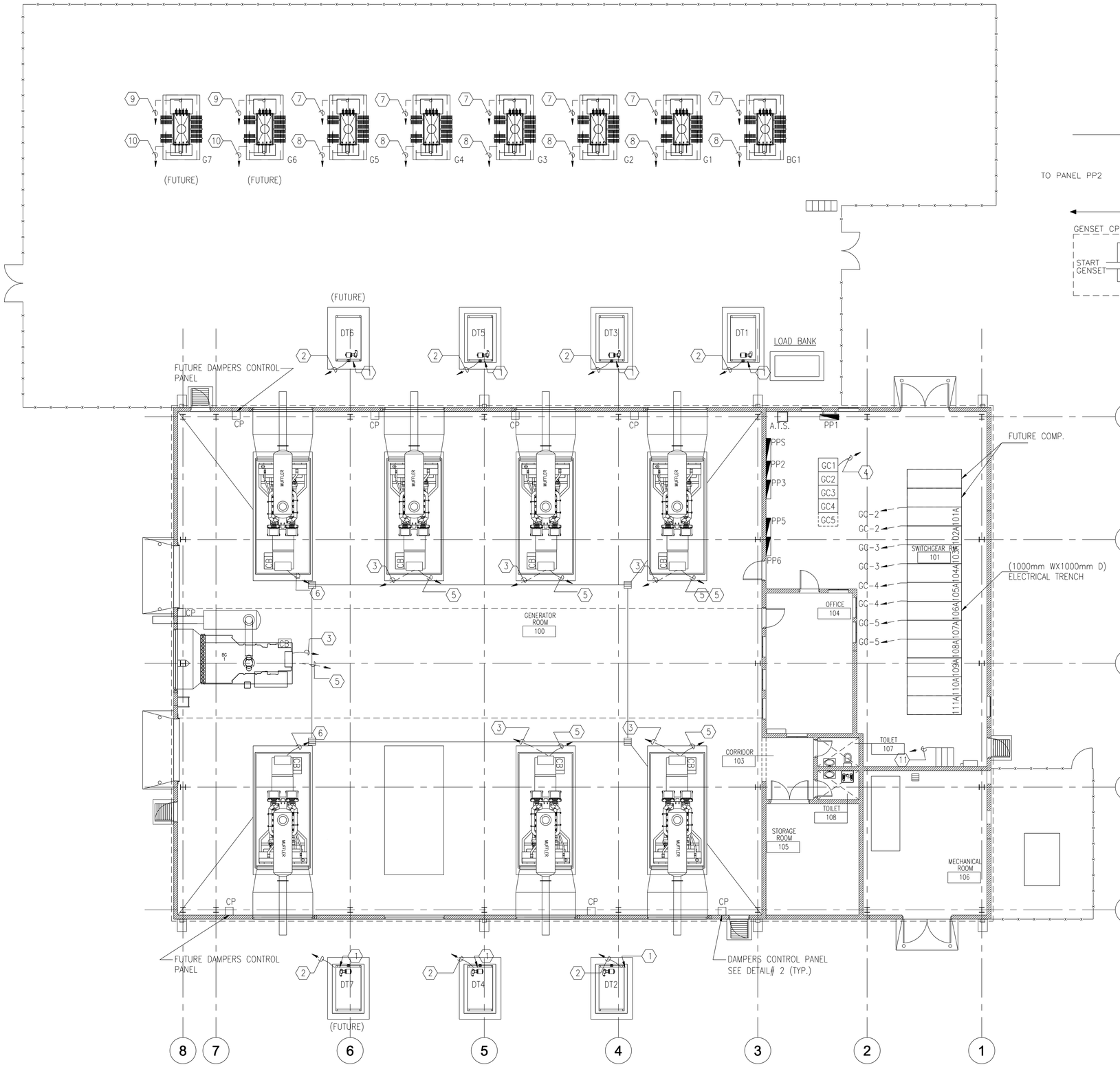

1 ELECTRICAL MONITORING & CONTROL PLAN

PP-E-04 SCALE: 1:100

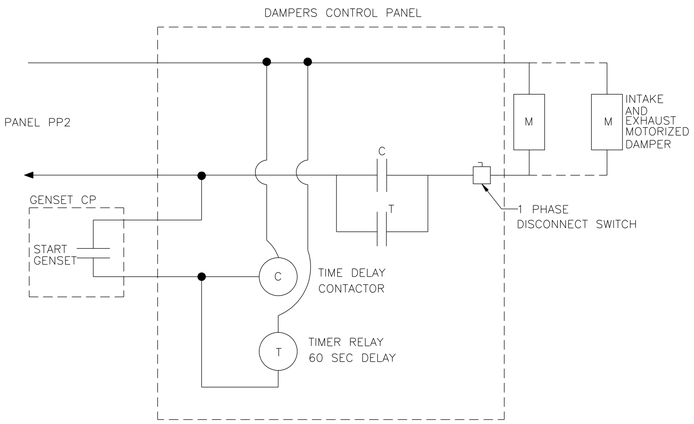

2 DETAIL#1 DAMPERS CONTROL

PP-E-04 SCALE: N.T.S

GENERAL NOTES

1. FUEL OIL DAY TANK CONTROLLER.
2. PROVIDE 4xø25mm CONDUIT FROM THE DAY TANK CONTROLLER TO:
   a. FUEL OIL ALARM ANNUNCIATION PANEL.
   b. FUEL OIL TRANSFER PUMP CONTROLLER.
   c. OVER FLOW PUMP CONTROLLER.
   d. REMOTE TRANSFER PUMP UNIT IF RQUIRED WIRING FOR THESE CONDUIT SHALL BE AS PER THE MANUFACTURE REQUIREMENTS.
3. CONTROL CABLES BETWEEN GENSET CONTROL PANEL AND GENERATOR CONTROL SWITCHBOARD AS FOLLOWING :
   3(2x4mm TWISTED PAIR)
   2(4x2.5mm TWISTED PAIR)
   1(18x1.5mm TWISTED PAIR)
   3(3x0.75mm TWISTED PAIR SHIELD)
   3(4x1.5mm TWISTED PAIR)
   IN(2xø100mm) CONDUIT OR AS PER MANUFACTURE REQUIREMENTS.
4. CONTROL CABLES BETWEEN GENERATOR CONTROL SWITCH BOARD AND M.V. SWITCH GEAR AS FOLLOWING :
   3(4x2.5mm^2 TWISTED PAIR)
   1(4x4mm^2 TWISTED PAIR)
   1(18x1.5mm^2 TWISTED PAIR)
   7(13x1.5mm^2)
   2(3x1.5mm^2)
   9x4mm^2
   IN(4xø100mm) CONDUIT OR AS PER MANUFACTURE REQUIREMENTS.
5. PROVIDE ø25mm CONDUIT FOR 4x4mm DAMPERS CONTROL CABLES IN BETWEEN GENSET CONTROL PANEL AND DAMPERS CONTROL PANEL FOR START, STOP SIGNAL
6. PROVIDE 4xø100mm CAPPED CONDUIT FROM THE FUTURE GENSET LOCATION TO M.V. SWITCHGEAR , 2xø100mm CONDUIT TO GENSE CONTROL PANEL AND 1xø25mm CONDUIT TO FUTURE DAMPER CONTROL PANEL
7. PROVIDE 2xø25mm CONDUIT FOR THE M.V. PART OF THE TRANSFORMER CONTROL CABLES TO M.V. SWITCHGEAR AS PER MANUFACTURE REQUIREMENTS.
8. PROVIDE 2xø25mm CONDUIT FOR THE LOW VOLTAGE PART OF THE TRANSFORMER CONTROL CABLES TO GENERATOR CONTROL PANEL AS PER MANUFACTURE REQUIREMENTS.
9. PROVIDE 2xø25mm CAPPED CONDUIT FROM THE FUTURE TRANSFORMERS LOCATION TO M.V. SWITCHGEAR
10. PROVIDE 2xø25mm CAPPED CONDUIT FROM THE FUTURE TRANSFORMERS LOCATION TO GENERATOR CONTROL PANEL.
11. PROVIDE CONTROL CABLES FOR THE 24V BATTERY CHARGER AS FOLLOWING
    -2X10mm TO GENERATOR CONTROL SWITCH BOARD
    -4X2.5mm TO M.V SWITCHGEAR
12. REFER TO MECHANICAL DRAWINGS FOR DAMPERS SEQUENCE OF OPERATION

1:100 DRAWING NOT TO SCALE

SYMBOL	DESCRIPTION	DATE	APR

DESIGNED BY: XXX	DATE: 06-27-07		
DWN BY: XXX	SUBMITTED BY: R. CREWAL CHIEF, PDT BLDG SYSTEMS		
CHK BY: XXX	FILE NO.: AF0707 O-PP-E-04		

US Army Corps of Engineers Transatlantic Programs Center

ANA REGIONAL BRIGADE
PAKTIKA, AFGHANISTAN

POWER PLANT
ELECTRICAL MONITORING AND CONTROL PLAN

SHEET REFERENCE NUMBER:
PP-E-04

$(getvar, "dwgprefix")$(getvar, "dwgname")$(edtime, 0, MON DD",", YYYY - HHMMam/pm)

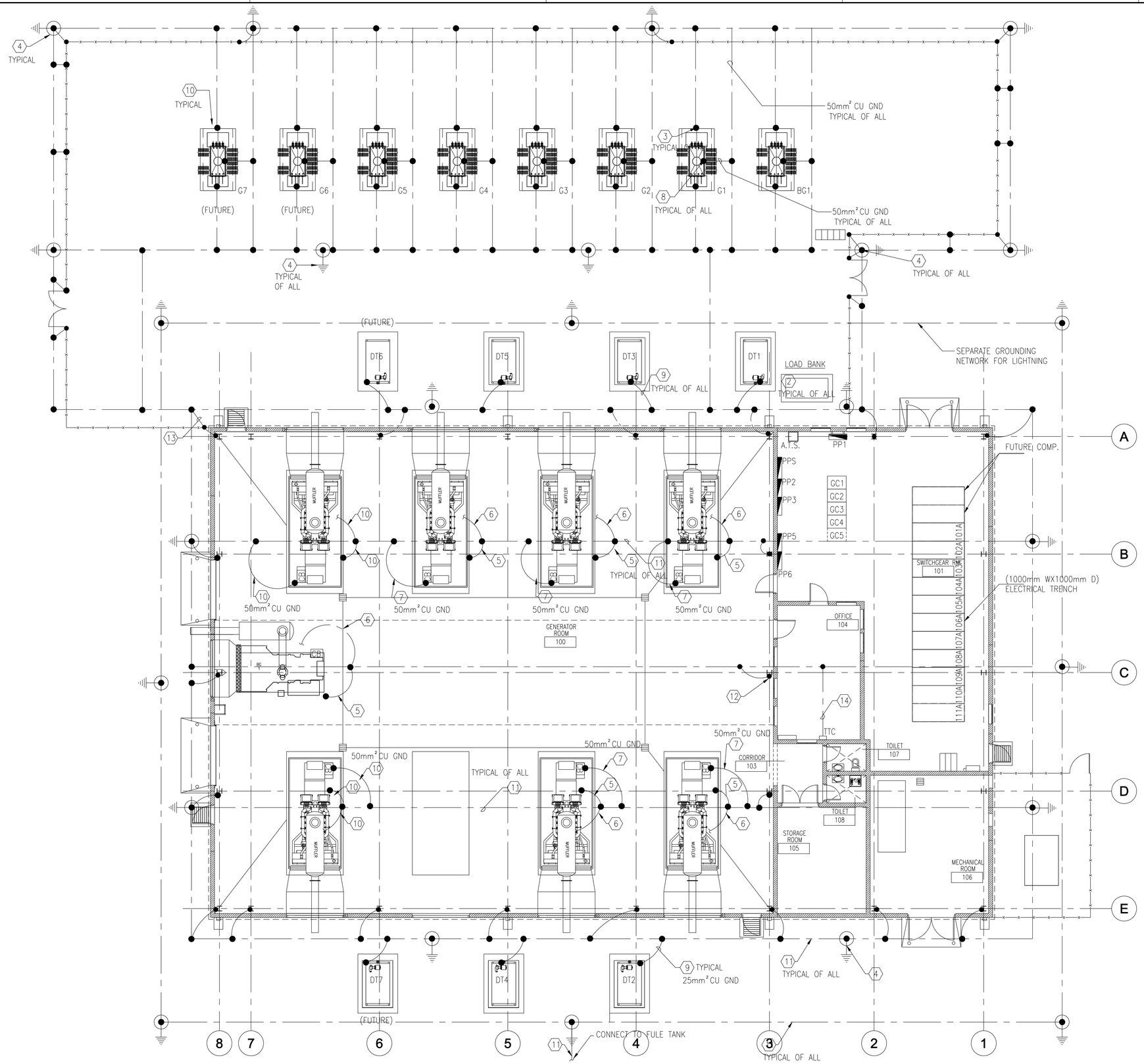

1 ELECTRICAL GROUNDING PLAN

PP-E-05

SCALE: 1:100

GENERAL NOTES

1. NOT USED.
2. EXOTHERMIC WELD.
3. BONDING CONDUCTOR TO EQUIPMENT GROUND BUS.
4. GRID GROUND ROD, 19mmX3m COPPER CLAD.
5. GROUNDING ELECTRODE TO ENGINE GENERATOR BODY.
6. GROUNDING ELECTRODE TO ENGINE GENERATOR WYE.
7. BONDING CONDUCTOR TO GENERATOR BREAKER EQUIPMENT GROUND BUS.
8. GROUNDING CONDUCTOR TO SUBSTATION TRANSFORMER TANK.
9. BONDING CONDUCTOR TO DAY TANK. PROVIDE GROUNDING CONDUCTOR COILED INSIDE PULL BOX FLUSH WITH FINISHED GRADE FOR FUTURE EQUIPMENT.
10.
11. 95mm² BARE COPPER GND CONDUCTOR MINIMUM DEPTH 762mm BELOW FINISH GRADE.
12. PROVIDE GROUND CONNECTION TO THE NEAREST STRUCTURAL STEEL OR GROUND GRID AS REQUIRED.
13. GROUND EVERY STRUCTURAL STEEL AS SHOWN AND AS REQUIRED.
14. 16mm² INSULATED BARE COPPER GROUND CONDUCTOR

NOTES:

1. SEE SHEETS CO-E-01 AND CO-E-02 FOR SYMBOLS, ABBREVIATIONS, GENERAL NOTES
2. SEE SHEET PP-E-01 FOR EQUIPMENT NOTES.
3. ALL INSTALLATIONS SHALL BE CONSTRUCTED FOR SEISMIC ZONE (UBC, 2003).

1:100 DRAWING NOT TO SCALE

SYMBOL	DESCRIPTION	DATE	APR

DESIGNED BY: XXX
DWN BY: XXX
CHK BY: XXX
DATE: 06-27-07
SUBMITTED BY: R. CERWAL CHIEF, PDT BLDG SYSTEMS
FILE NO.: AF0707 O-PP-E-05

US Army Corps of Engineers Transatlantic Programs Center

ANA REGIONAL BRIGADE
PAKTIKA, AFGHANISTAN

POWER PLANT
ELECTRICAL GROUNDING PLAN

SHEET REFERENCE NUMBER:
PP-E-05

$(getvar, "dwgprefix")$(getvar, "dwgname")$(edtime, O, MON DD", YYYY - H:MMam/pm)

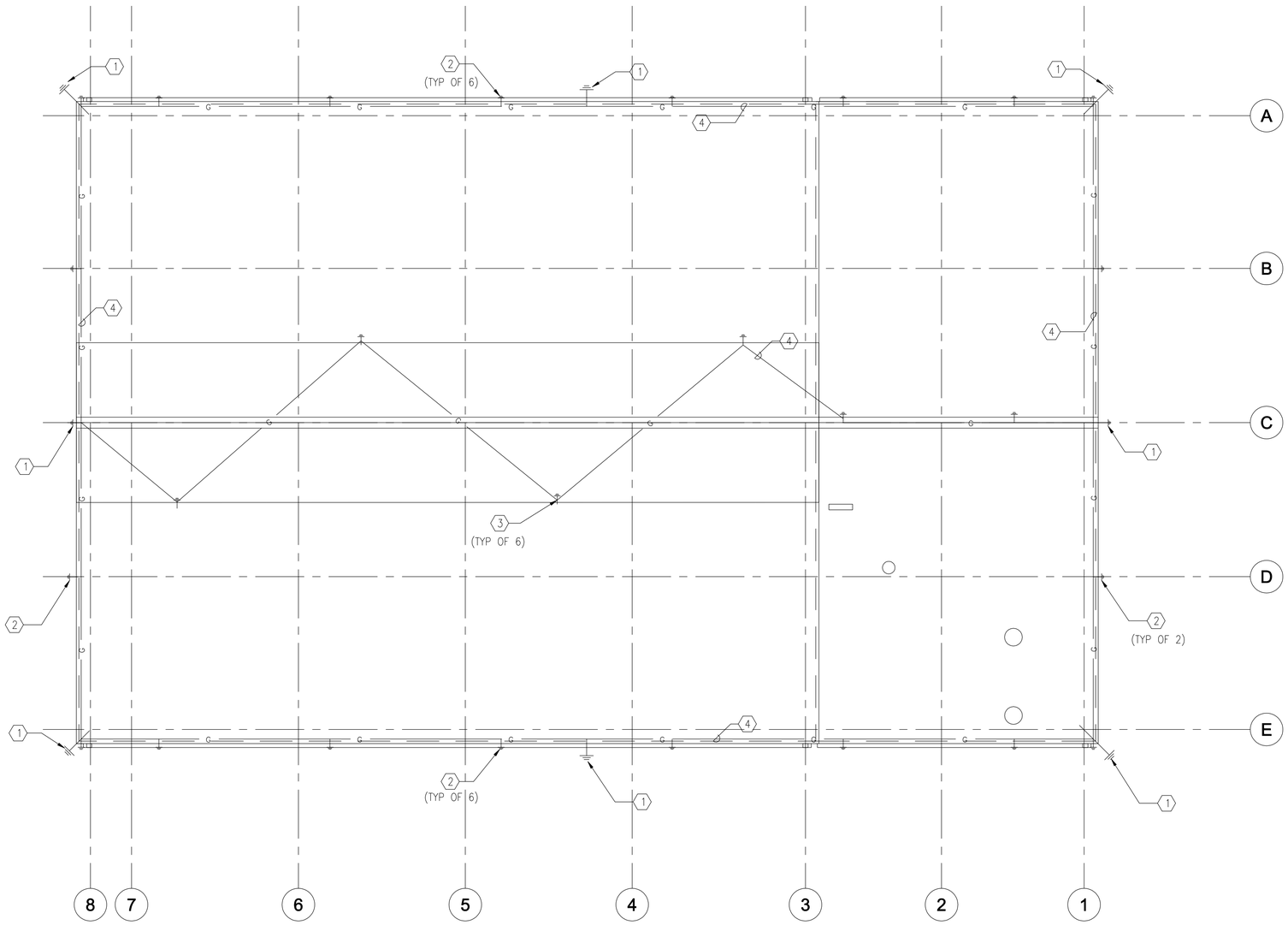

1 LIGHTNING PROTECTION ROOF PLAN

PP-E-06 SCALE: 1:100

NOTES:

1. SEE SHEET CO-E-01 FOR SYMBOLS AND ABBREVIATIONS.
2. SEE SHEET PP-E-05 FOR GROUNDING PLAN.
3. ALL LIGHTNING PROTECTION SYSTEM COMPONENTS SHALL BE OF COPPER TINNED COATED CLASS II MATERIAL.
4. INSTALLATION SHALL BE PERFORMED FOLLOWING LIGHTNING PROTECTION INSTITUTE STANDARDS OR EQUIVALENT EUROPEAN STANDARD, NFPA780 RECOMMENDATIONS.
5. SUPPORT LIGHTNING PROTECTION CONDITIONS EVERY 914mm MAXIMUM.
6. MOUNT PERIMETER AIR TERMINALS WITHIN 600mm OF ROOF EDGE.
7. ANY GROUNDED METALLIC BODY WITHIN THE DISTANCE SPECIFIED BY NFPA 780 SHALL BE BONDED TO THE LIGHTNING PROTECTION SYSTEM.
8. ALL CONDUCTORS SHALL BE SIZED PER NFPA 780 CLASS I.

GENERAL NOTES

(1) DOWN LEAD CONDUCTOR #120mm^2 BARE COPPER. RUN CONCEALED DOWN TO GROUND LOOP. SEE SHEET PP-E-05.

(2) PARAPET MOUNTED AIR TERMINALS 610mm x 16mm.

(3) SLOPING ROOF AIR TERMINALS FIXED ABOVE HIGHEST POINT OF THE HOOD BY 600mm.

(4) 1/C x 120mm^2 BARE COPPER CONDUCTOR.

1 0 1 2 3 4 5 6 7 8 9
1:100 DRAWING NOT TO SCALE

SYMBOL	DESCRIPTION	DATE	APR

DESIGNED BY: XXX
DATE: 06-27-07
DWN BY: XXX
SUBMITTED BY: R. GREWAL CHIEF, PP, BLDG SYSTEMS
CHK BY: XXX
FILE NO.: AF07070-PP-E-06

US Army Corps of Engineers Transatlantic Programs Center

ANA REGIONAL BRIGADE
PAKTIKA, AFGHANISTAN

POWER PLANT
LIGHTNING PROTECTION ROOF PLAN

SHEET REFERENCE NUMBER:
PP-E-06

$(getvar, "dwgprefix")$(getvar, "dwgname")$(edtime, 0, MON DD", YYYY - HHMMam/pm)

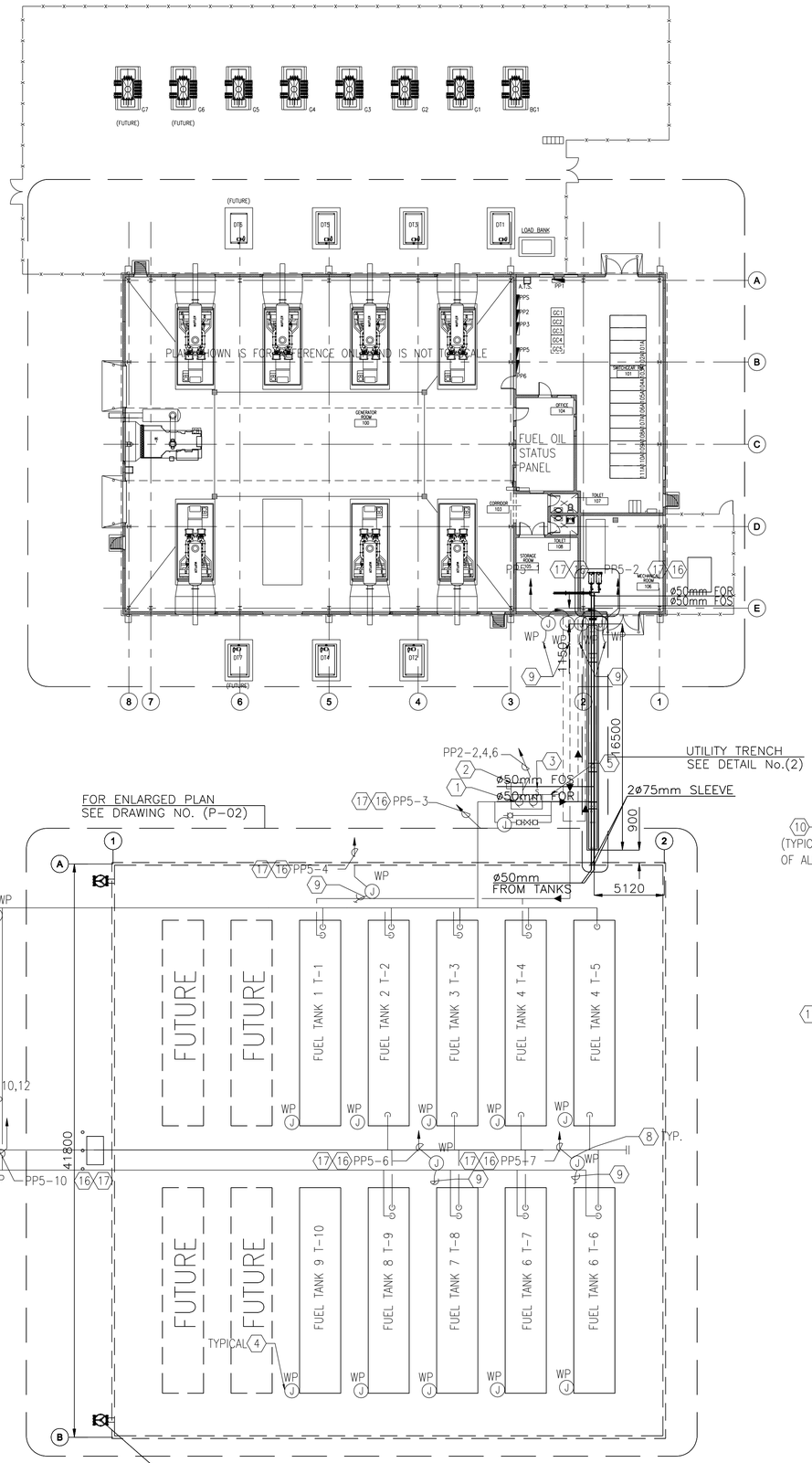

1 FUEL TANKS PLAN

PP-E-07 SCALE: 1:200

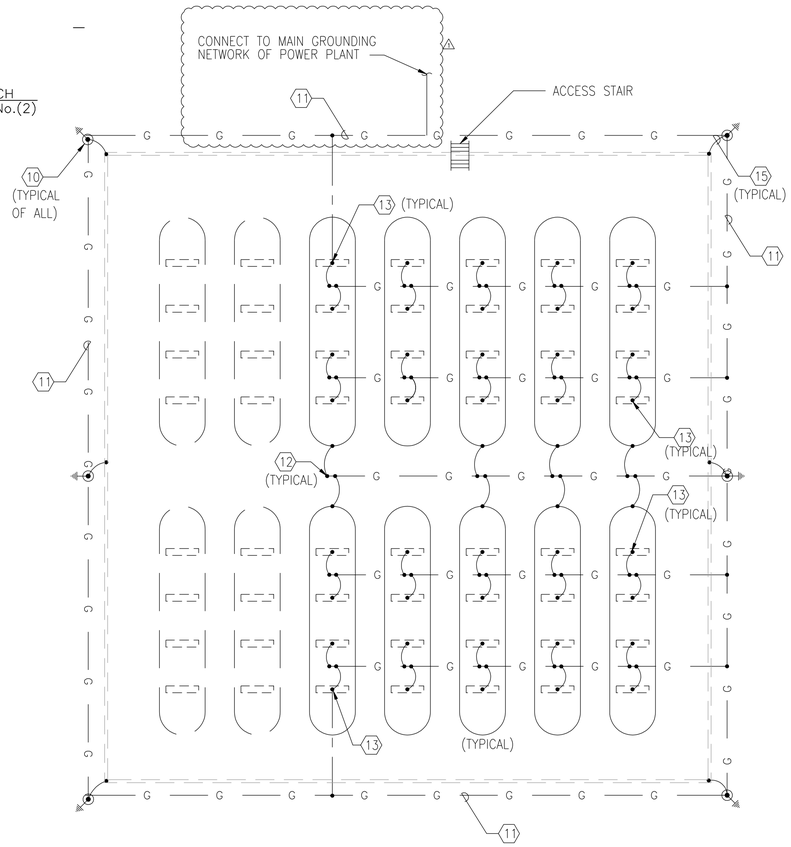

2 FUEL OIL TANK - GROUNDING PLAN

PP-E-07 SCALE: 1:200

N

NOTES:

1. FUEL OIL TRANSFER AUTOMATIC PUMP PACKAGED UNIT WITH DUPLEX PUMPS P-1 & P-2, 380V, 3ø
2. PROVIDE 3P, 30A, N.F.D.S FUSED AT 20A IN NEMA 3R ENCLOSURE OR INSIDE THE PUMP CONTROLLER
3. LOCAL PUMP OFF – AUTO CONTROL SWITCH AND PILOT LIGHT.
4. SIGNAL/STATUS/CONTROL WIRING FROM TANK LEVEL PROBE TO DIGITAL CONTROLLER
5. PROVIDE CONDUIT AND WIRING TO REMOTE FUEL OIL (STATUS ALARM ANNUNCIATION PANEL LOCATED IN OFFICE 104 OF THE POWER PLANT BLDG.) AND TO DAY TANKS CONTROLLER AS PER MANUFACTURER REQUIREMENTS.
6. FUEL OIL OFF LOADING PUMP PACKAGED UNIT WITH DUPLEX PUMPS P-3 & P-4, 380V, 3ø,
7. PROVIDE 3P, 40A, N.F.D.S FUSED AT 40A IN NEMA 3R ENCLOSURE OR INSIDE THE PUMP CONTROLLER
8. PROVIDE WEATHER PROOF JUNCTION BOX FOR PIPING HEAT TRACING CONNECTIONS.
9. TO HEAT TRACE CONNECTION.
10. GRID GROUND ROD, 19mm x 3m GALVANIZED STEEL.
11. 95mm² BARE COPPER GROUND CONDUCTOR. MINIMUM DEPTH SHALL BE 762mm BELOW FINISHED GRADE.
12. EXOTHERMIC WELD.
13. 95mm² BONDING CONDUCTOR. EXOTHERMICALY WELDED ON THE FUEL TANK GROUNDING LOOP AND TERMINATED ON THE TANK SADDLE SUPPORT VIA COMPRESSION FITTINGS WITH COPPER HARDWARE.
14. NOT USED.
15. BONDING CONDUCTOR TO GRID GROUND ROD. 50mm² COPPER GROUND.
16. (2-1/Cx4mm² Cu+4mm² Cu GND) INSIDE 25mm C
17. POWER CONDUIT SHALL RUN 36" BELOW FINISHED GRADE TO PANEL BOARD INDICATED.
18. PROVIDE DIGITAL CONTROLLER AND MONITORING DEVICE FOR THE BULK TANKS IN ENEMA 3R ENCLOSURE
19. PROVIDE WIRING TO REMOTE MONITORING PANEL IN OFFICE 104 AS PER MANUFACTURE RECOMMENDATION

SYMBOL	DESCRIPTION	DATE	APR

DESIGNED BY: XXX
DATE: 06-27-07
DWN. BY: XXX
SUBMITTED BY: R. GREWAL CHIEF, BLDG SYSTEMS
CHK. BY: XXX
FILE NO.: AF0707 O-PP-E-07

US Army Corps of Engineers Transatlantic Programs Center

ANA REGIONAL BRIGADE
PAKTIKA, AFGHANISTAN

POWER PLANT
FUEL TANKS PLAN

SHEET REFERENCE NUMBER:
PP-E-07

2 0 2 4 6 8 10 12 14 16 18
DRAWING NOT TO SCALE
1:200

$(getvar, "dwgprefix")$(getvar, "dwgname")$(edtime, 0, MON DD",", YYYY - HHMMam/pm)

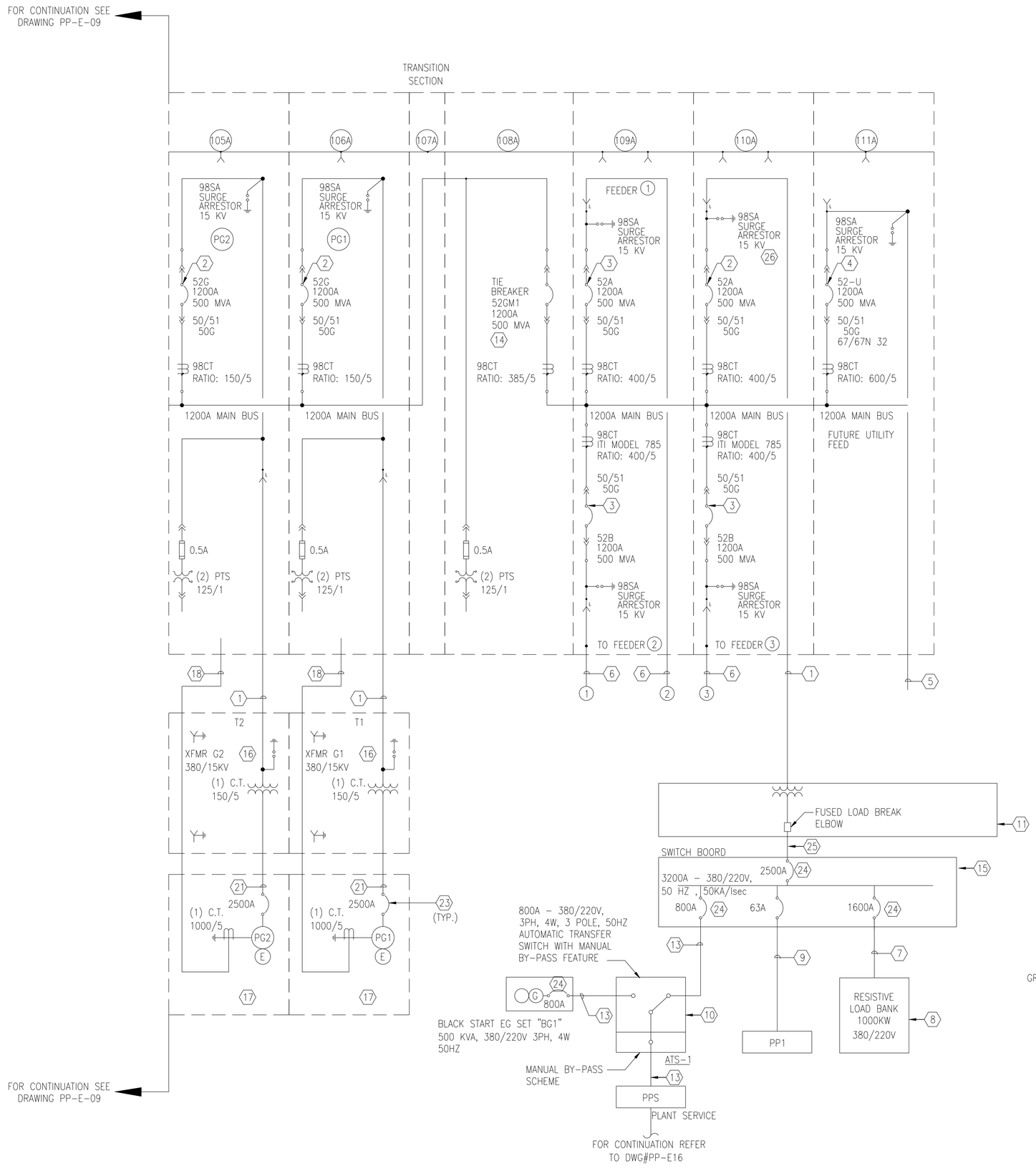

16 SUBSTATION UNIT STEP-UP TRANSFORMER, 1500KVA, 380/220, 3PH, 4W WYE PRIMARY, 15KV WYE, 3PH, 3W, 50 HZ, SECONDARY.

17 50HZ-1290KW STANDBY AND 1100 KW PRIME RATED .8PF 380V

18 CONTROL WIRING AS REQUIRED BY EQUIPMENT SUPPLIER.

19 53mm CONDUIT ROUGH-IN FOR FUTURE CONTROL WIRING.

20 103mm CONDUIT ROUGH-IN FOR FUTURE FEEDERS.

21 NINE 103mm CONDUIT EACH WITH 3x300 AND 1X50mm² GROUND. CU-PVC/PVC OR(TEN 103 CONDUIT EACH WITH 3x240 AND 1X50mm² GND CU - PVC/PVC)

22 NOT USED

23 2500A , THREE POLE ENGINE MOUNTED BREAKER WITH GROUND FAULT SHUNT TRIP AND AUXILIARY CONTACT

24 THIS BREAKER SHALL BE POWER BREAKER 100% RATTED.

25 EIGHT 103mm CONDUIT EACH WITH 3x300 AND 1X50mm GROUND. CU-PVC/PVC

26 MOV TYPE, DUTY CYCLE RATING. 8.4KV. MCOV. SHALL COMPLY WITH LATEST REVISION OF ANSI C62.11. INCLUDES ANSI C37.42 TYPE A. BRACKET, INSULATING TOP CAP, BOTTOM ISOLATOR AND APPROVED GROUND LEAD. TOP CAP, BOTTOM ISOLATOR AND APPROVED GROUND LEAD

NOTES:

1 (3/C - 35mm²+1/C - 35mm² FOR GROUND.) MEDIUM VOLTAGE CABLE

2 BREAKER SETTING PER NEC TO PROTECT TRANSFORMER FEEDER. MANUFACTURER TO PROVIDE PROTECTIVE DEVICE COORDINATION STUDY/CURVES, RELAY SETTINGS, ETC. AS PART OF START-UP PACKAGE.

3 BREAKER SETTING PER NEC TO PROTECT DISTRIBUTION FEEDER. MANUFACTURER TO PROVIDE PROTECTIVE DEVICE COORDINATION STUDY/CURVES, RELAY SETTINGS, ETC. AS PART OF START-UP PACKAGE.

4 SPECIFIC SETTINGS NOT IDENTIFIED AT THIS TIME SINCE FEEDERS ARE FUTURE.

5 TWO SPARE 103mm CONDUITS WITH PULL-WIRE.

6 TWO 103mm CONDUITS ONE SPARE WITH PULL-WIRE, ONE WITH PRIMARY FEEDER. (3X95mm² CU/XLPE) M.V CABLE

7 SIXTH 103mm CONDUITS EACH WITH 4x300 AND 1X50mm² GND CU-PVC/PVC OR (SEVEN 103 CONDUITS EACH WITH 4X240 AND 1X50mm² GND - PVC/PVC)

8 1000KW RESISTIVE OUTDOOR WEATHER PROOF LOAD BANK. 380/220V, 50HZ, 50 KW STEPS, OVER CURRENT PROTECTIVE DEVICE, CONTROL, ETC.

9 ONE 50mm CONDUITS WITH 4(1CX35mm²) AND 1X16mm² GND CU-PVC/PVC

10 800AMP, 380/220V, 50 HZ, 3-POLE AUTOMATIC TRANSFER SWITCH. AUXILIARIES PER SPECIFICATIONS.

11 1500 KVA SUBSTATION UNIT. 15KV PRIMARY, 380/220V WYE SECONDARY. RADIAL FEED .

12 (TWO 103mm CONDUITS EACH WITH 4x150 AND 1X35mm² GND CU-PVC/PVC)

13 THREE 103mm CONDUITS EACH WITH 4x300 AND 1X50mm² GND CU-PVC/PVC OR (FOUR 103 CONDUITS EACH WITH 4x240 AND 1X50mm² GND - PVC/PVC)

14 INTERLOCKS TO BE COORDINATED WITH ENGINE GENERATOR CONTROLS SUPPLIER.

15 NEMA 3R 2500A,380V,50HZ,5W SWITCH BOORD

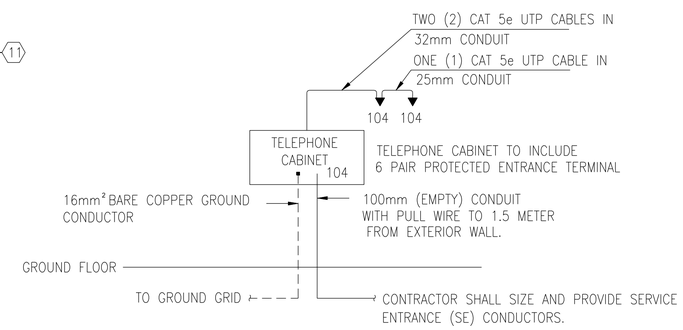

1 TELEPHONE RISER DIAGRAM

PP-E-08 SCALE: N.T.S

DRAWING NOT TO SCALE

SYMBOL	DESCRIPTION	DATE	APR

DESIGNED BY: XXX
DWN BY: XXX
CHK BY: XXX
DATE: 06-27-07
SUBMITTED BY: R. CRESWAL CHIEF, BLDG SYSTEMS
FILE NO.: AF0707 O-PP-E-08

US Army Corps of Engineers Transatlantic Programs Center

ANA REGIONAL BRIGADE
PAKTIKA, AFGHANISTAN

POWER PLANT
ONE-LINE DIAGRAM
AND TELEPHONE RISER DIAGRAM

SHEET REFERENCE NUMBER:
PP-E-08

$(getvar, "dwgprefix")$(getvar, "dwgname")$(edtime, O, MON DD"," YYYY - HHMMam/pm)

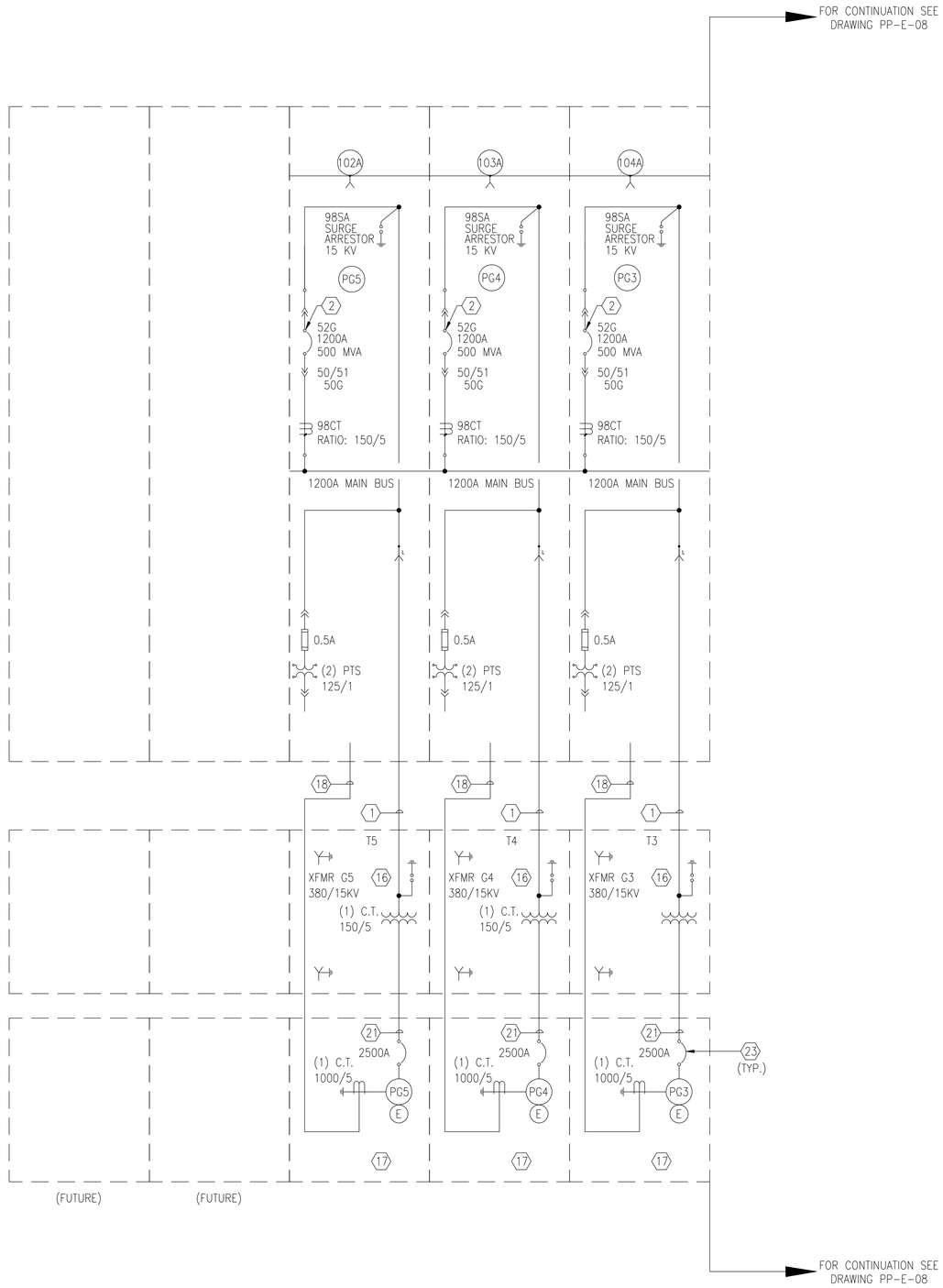

1 ONE - LINE DIAGRAM

PP-E-09 SCALE: N.T.S

NOTE:

1. REFER TO SHEET PP-E-08 FOR KEY NOTES.

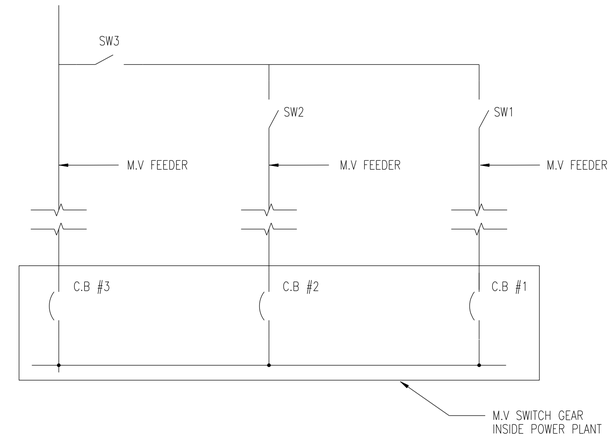

Sequence Of Operation For Line to Line Transition

	C.B # 1	C.B # 2	C.B # 3	Sw # 1	Sw # 2	Sw # 3	
Normal Conditions	Closed	Closed	Closed	Open	Closed	Open	Each Feeder Fed From Separate Medium Voltage Circuit Breaker In The Medium Voltage Switchgear
Up Normal Conditions	Open	Closed	Closed	Closed	Closed	Open	Feeder 1 Fed From C.B # 2
	Closed	Open	Closed	Closed	Closed	Open	Feeder 2 Fed From C.B # 1
	Closed	Closed	Open	Open	Closed	Closed	Feeder 3 Fed From C.B # 2
	Closed	Open	Closed	Open	Closed	Closed	Feeder 2 Fed From C.B # 3
	Closed	Closed	Open	Closed	Open	Closed	Feeder 3 Fed From C.B # 1
	Open	Closed	Closed	Closed	Open	Closed	Feeder 1 Fed From C.B # 3

Notes :

- Under Normal Conditions the System Will Operate " Open Loop " The MID-Loop Sectionalized Switch (Sw1 And Sw3) Will Be Open And The Feeder Circuit Breaker Will Be Closed ,If Necessary One Of The Feeders Circuit Breaker Can Be Opened And Allowing The System To Operate " Closed loop " Under Close Supervision Of The Authorized Personnel.
- Over Head Sw # 1 , 2 and 3 : The Switching Arm Shall Be Protected By Locked Box , Shall Only Opened By Authorized Peoples
- **Warning Sign** Should be Indicating That The Switch Should Be Opened Or Closed As Per The Attached Sequence Of Operation.

DRAWING NOT TO SCALE

SYMBOL	DESCRIPTION	DATE	APR

DESIGNED BY: XXX
DWN BY: XXX
CHK BY: XXX
DATE: 06-27-07
SUBMITTED BY: R. GREWAL CHIEF, BLDG SYSTEMS
FILE NO.: AF0707 0-PP-E-09

US Army Corps of Engineers Transatlantic Programs Center

ANA REGIONAL BRIGADE
PAKTIKA, AFGHANISTAN

POWER PLANT
ONE-LINE DIAGRAM

SHEET REFERENCE NUMBER:
PP-E-09

$(getvar, "dwgprefix")$(getvar, "dwgname")$(edtime, 0, MON DD", YYYY - H:MMam/pm)

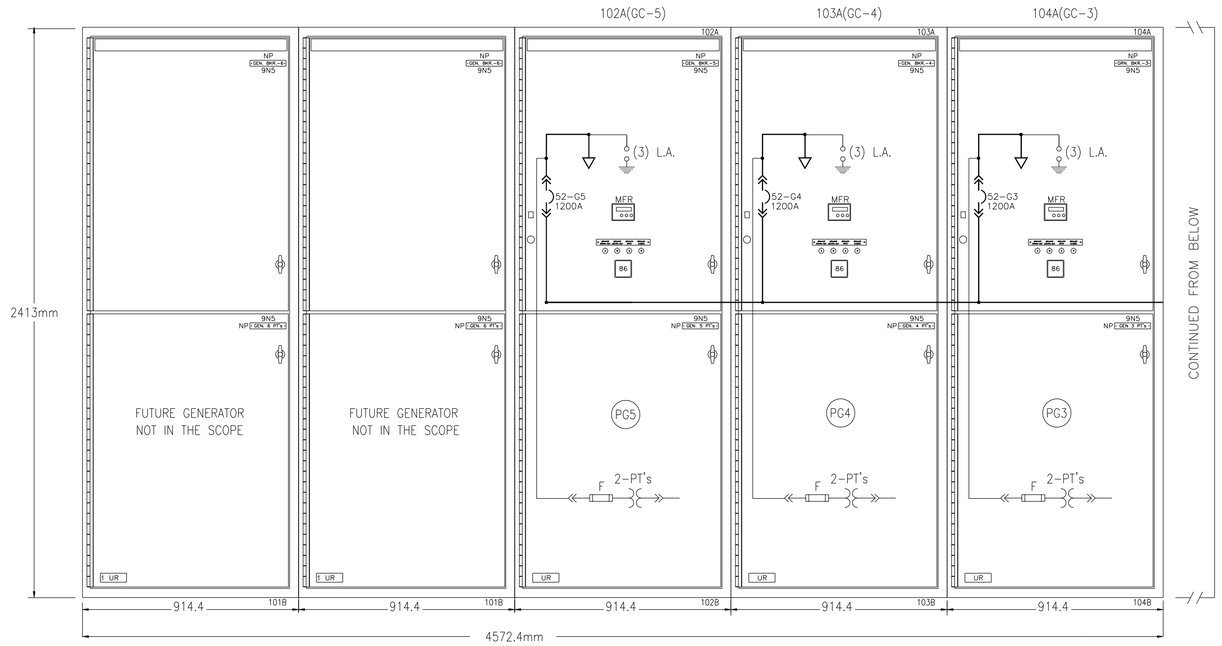

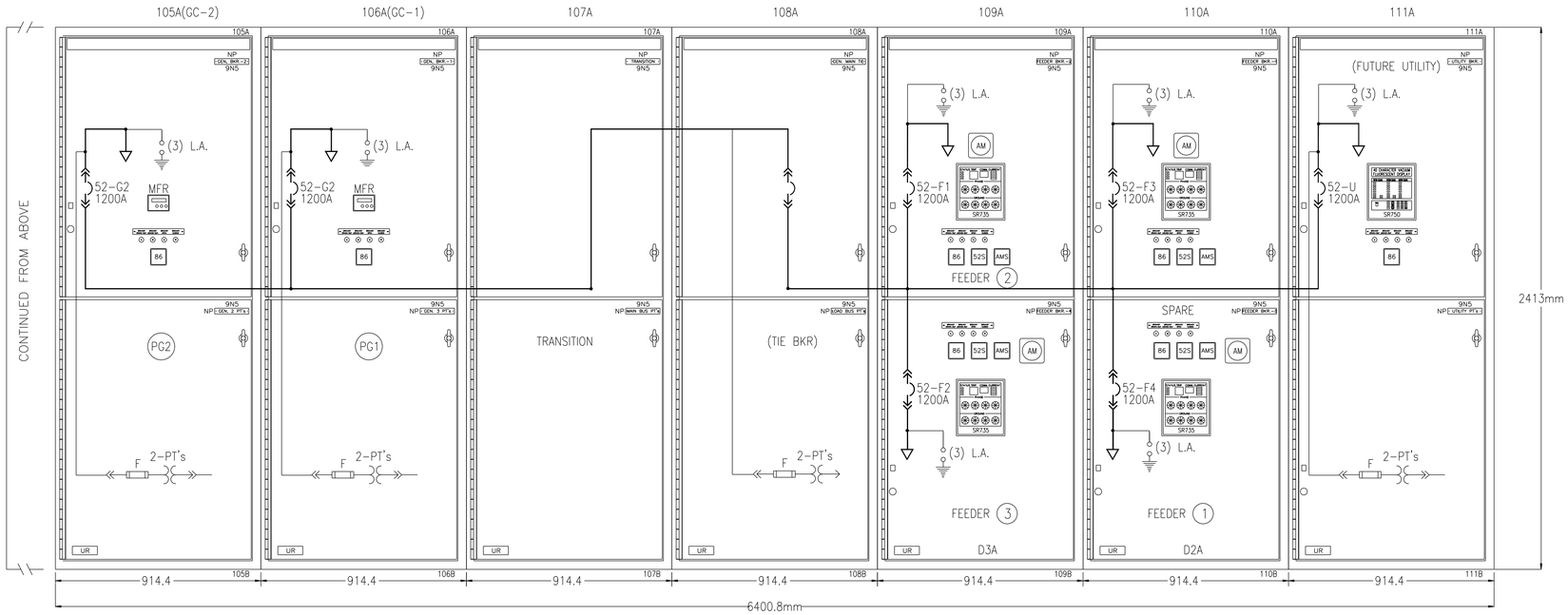

NOTES:

1. SEE DWG CO-E-01 FOR SYMBOLS AND ABBREVIATIONS.
2. SEE DWG PP-E-01 FOR EQUIPMENT NOTES.

DRAWING NOT TO SCALE

SYMBOL	DESCRIPTION	DATE	APR

DESIGNED BY: XXX
DWN BY: XXX
CHK BY: XXX
DATE: 06-27-07
SUBMITTED BY: R. CARDEWAL, CHIEF, PDT BLDG SYSTEMS
FILE NO.: AF07070-PP-E-10

US Army Corps of Engineers Transatlantic Programs Center

ANA REGIONAL BRIGADE
PAKTIKA, AFGHANISTAN

POWER PLANT
ELECTRICAL 15KV SWITCHGEAR
PP-SWBD1 ELEVATIONS

SHEET REFERENCE NUMBER:
PP-E-10

$(getvar, "dwgprefix")$(getvar, "dwgname")$(edtime, O, MON DD", " YYYY - H:MMam/pm)

NOTES:

1. SEE DWG CO-E-01 FOR SYMBOLS AND ABBREVIATIONS.
2. SEE DWG PP-E-01 FOR EQUIPMENT NOTES.

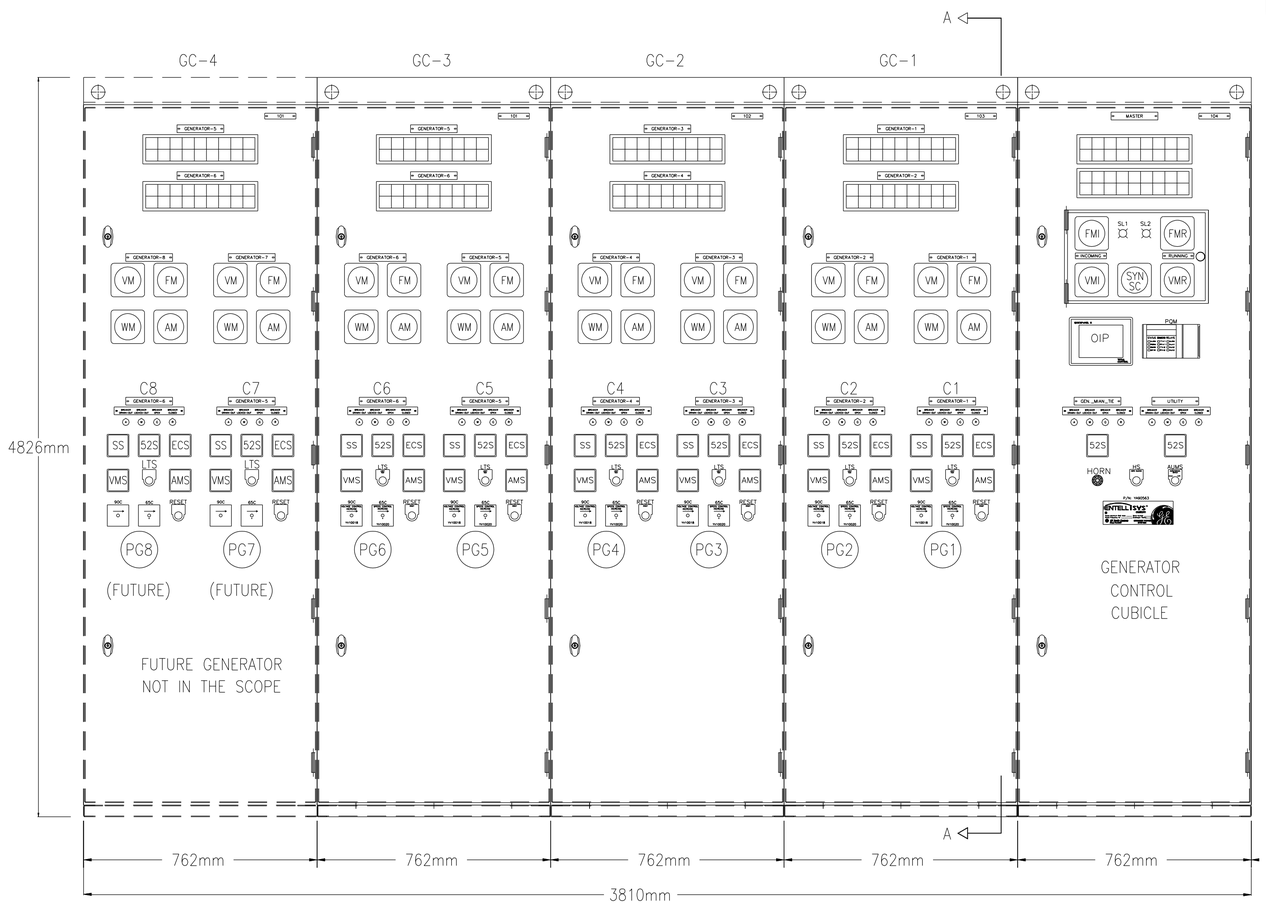

FRONT VIEW

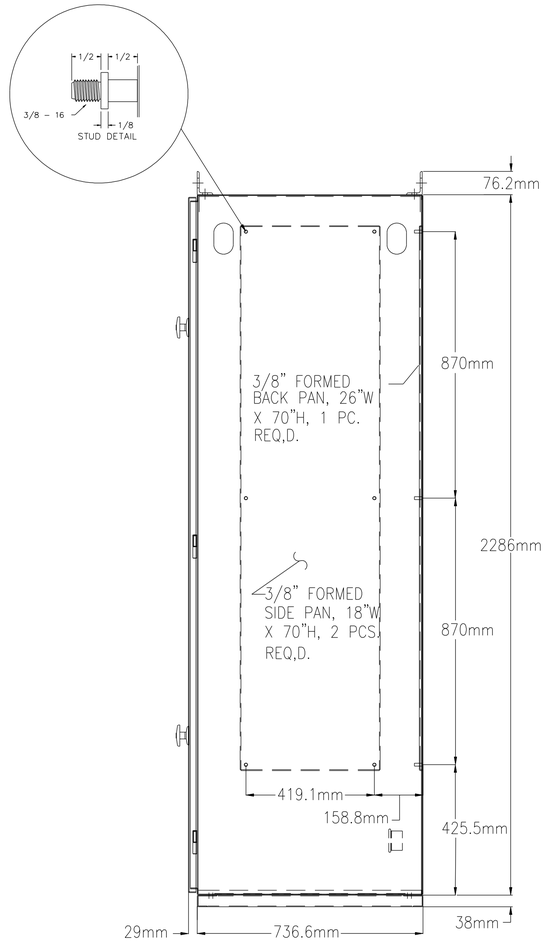

SECTION "A - A"

1 GENERATOR CONTROL SWITCHBOARD

PP-E-11

SCALE: N.T.S

DRAWING NOT TO SCALE

SYMBOL	DESCRIPTION	DATE	APR

DESIGNED BY: XXX
DATE: 06-27-07
DWN BY: XXX
SUBMITTED BY: R. GREWAL CHIEF, PPT BLDG SYSTEMS
CHK BY: XXX
FILE NO.: AF07070-PP-E-11

US Army Corps of Engineers Transatlantic Programs Center

ANA REGIONAL BRIGADE
PAKTIKA, AFGHANISTAN

POWER PLANT
GENERATOR
CONTROL SWITCHBOARD

SHEET REFERENCE NUMBER:
PP-E-11

$(getvar, "dwgprefix")$(getvar, "dwgname")$(edtime, O, MON DD", YYYY - HHMMam/pm)

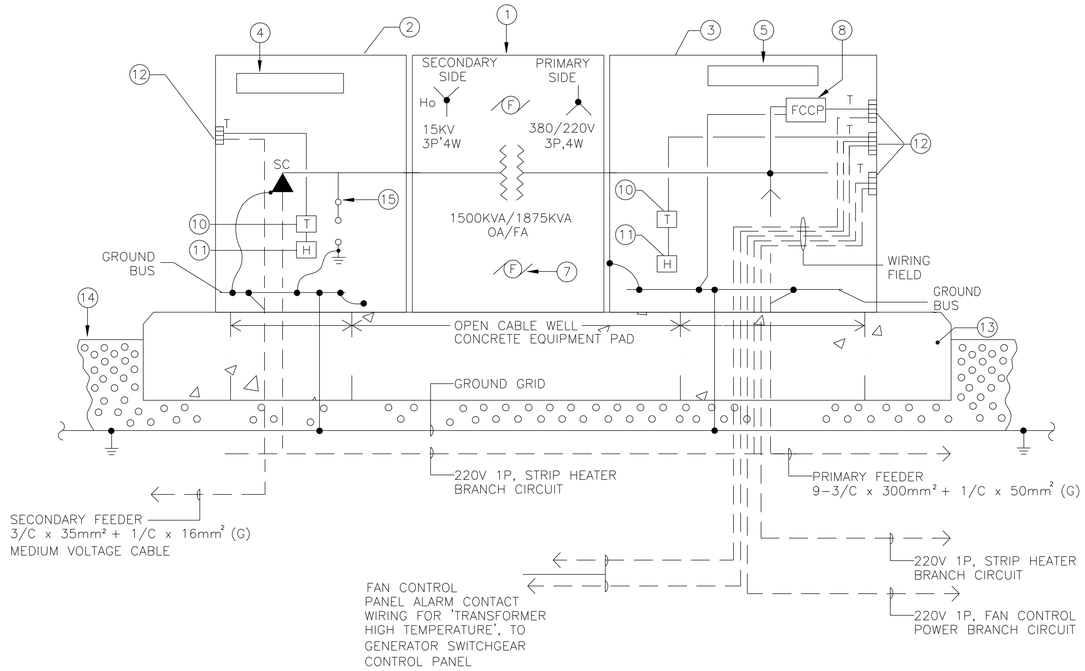

LEGEND OF EQUIPMENT	
ITEM-◯	DESCRIPTION
1	OIL FILLED TRANSFORMER TANK WITH PRIMARY AND SECONDARY TANK THROATS.
2	SECONDARY SIDE AIR TERMINAL CHAMBER WITH HINGED DOOR WITH PADLOCK PROVISIONS.
3	PRIMARY SIDE AIR TERMINAL CHAMBER WITH HINGED DOOR.
4	PHEOLIC NAMEPLATE WITH 3" HIGH LETTERING (FRONT AND REAR): DANGER – KEEP OUT HIGH VOLTAGE 15,000 VOLTS DANGER – TRANSFORMER SECONDARY SIDE
5	PHEOLIC NAMEPLATE WITH 3" HIGH LETTERING (FRONT AND REAR): DANGER – KEEP OUT 380 VOLTS DANGER – TRANSFORMER PRIMARY SIDE
6	NOT USED
7	TRANSFORMER COOLING FAN
8	FAN COOLING CONTROL UNIT
9	NOT USED
10	STRIP HEATER THERMOSTAT
11	STRIP HEATER/FUSE
12	MANUFACTURER'S TERMINAL BLOCKS FOR TERMINATION OF FIELD WIRING
13	REINFORCED CONCRETE FOUNDATION – MINIMUM 12" THICK W/ CHAMFERED EDGES. REFER TO CIVIL DWG. FOR DETAILS.
14	CRUSHED STONE BED FOR OIL CONTAINMENT. REFER TO CIVIL DWGS. FOR DETAILS.
15	SURGE ARRESTOR

TRANSFORMER PG 1 PG 2 PG 3 PG 4 PG 5 PG 6

DETAIL – SUBSTATION STYLE OIL FILLED STEP-UP TRANSFORMER

1500/1875KVA-OA/FA
@50HZ @1500 METERS ABOVE SEA LEVEL @40°C. -5.75% IMPEDANCE

DRAWING NOT TO SCALE

SYMBOL	DESCRIPTION	DATE	APR

DESIGNED BY: XXX
DATE: 06-27-07
DWN BY: XXX
SUBMITTED BY: R. GREWAL CHIEF, PDT BLDG SYSTEMS
CHK BY: XXX
FILE NO.: AF07070-PP-E-12

US Army Corps of Engineers
Transatlantic Programs Center

ANA REGIONAL BRIGADE
PAKTIKA, AFGHANISTAN

POWER PLANT
ELECTRICAL TRANSFORMER
DETAILS PP-SWBD1 ELEVATIONS

SHEET REFERENCE NUMBER:
◯
PP-E-12

$(getvar, "dwgprefix")$(getvar, "dwgname")$(edtime, O, MON DD",." YYYY - H:MMam/pm)

PANEL–PP1

AIC: 25KA ISC/0.5SEC

63AT/100AF MCB

VOLTAGE 380/220V, 3PH, 5W, 50HZ

FEED BOTTOM

MOUNTING SURFACE

LOCATION PP SWITCHGEAR RM.
FED FROM SWBD

DESCRIPTION	LOAD (VA) A	LOAD (VA) B	LOAD (VA) C	AMP	POLE	CKT	A B C	CKT	POLE	AMP	LOAD (VA) A	LOAD (VA) B	LOAD (VA) C	DESCRIPTION
STRIP HEATER–GS1 XMFR & XFMR FAN CTRL PNL–GS1	700			20	1	1		2	1	20	1000			DAY TANK OIL PUMP/CTRL AND HEATER PG5
STRIP HEATER–GS2 XMFR & XFMR FAN CTRL PNL–GS2		700		20	1	3		4	1	20		1000		DAY TANK OIL PUMP/CTRL AND HEATER PG5
STRIP HEATER–GS3 XMFR & XFMR FAN CTRL PNL–GS3			700	20	1	5		6	1	20			1000	DAY TANK OIL PUMP/CTRL AND HEATER PG5
STRIP HEATER–GS4 XMFR & XFMR FAN CTRL PNL–GS4	700			20	1	7		8	1		1000			SPACE FOR FUTURE DAY TANK OIL PUMP/CTRL AND HEATER PG6
STRIP HEATER–GS5 XMFR & XFMR FAN CTRL PNL–GS5		700		20	1	9		10	1			1000		SPACE FOR FUTURE DAY TANK OIL PUMP/CTRL AND HEATER PG6
SPARE				20	1	11		12	1				1000	SPACE FOR FUTURE DAY TANK OIL PUMP/CTRL AND HEATER PG6
SPACE FOR FUTURE STRIP HEATER–GS6 XMFR & XFMR FAN CTRL PNL–GS6	700			20	1	13		14	1		1000			SPACE FOR FUTURE DAY TANK OIL PUMP/CTRL AND HEATER PG7
SPACE FOR FUTURE STRIP HEATER–GS7 XMFR & XFMR FAN CTRL PNL–GS7		700		20	1	15		16	1			1000		SPACE FOR FUTURE DAY TANK OIL PUMP/CTRL AND HEATER PG7
STRIP HEATER–BG1 XMFR & XFMR FAN CTRL PNL–BG1			700	20	1	17		18	1				1000	SPACE FOR FUTURE DAY TANK OIL PUMP/CTRL AND HEATER PG7
DAY TANK OIL PUMP/CTRL AND HEATER PG1	1000			20	1	19		20	1	20	1000			DAY TANK OIL PUMP/CTRL AND HEATER BG1
DAY TANK OIL PUMP/CTRL AND HEATER PG1		1000		20	1	21		22	1	20		1000		DAY TANK OIL PUMP/CTRL AND HEATER BG1
DAY TANK OIL PUMP/CTRL AND HEATER PG1			1000	20	1	23		24	1	20			1000	DAY TANK OIL PUMP/CTRL AND HEATER BG1
DAY TANK OIL PUMP/CTRL AND HEATER PG2	1000			20	1	25		26						
DAY TANK OIL PUMP/CTRL AND HEATER PG2		1000		20	1	27		28	3	20				SPARE
DAY TANK OIL PUMP/CTRL AND HEATER PG2			1000	20	1	29		30						
DAY TANK OIL PUMP/CTRL AND HEATER PG3	1000			20	1	31		32						
DAY TANK OIL PUMP/CTRL AND HEATER PG3		1000		20	1	33		34						SPACE
DAY TANK OIL PUMP/CTRL AND HEATER PG3			1000	20	1	35		36						
DAY TANK OIL PUMP/CTRL AND HEATER PG4	1000			20	1	37		38	1	20				SPARE
DAY TANK OIL PUMP/CTRL AND HEATER PG4		1000		20	1	39		40	1	20				SPARE
DAY TANK OIL PUMP/CTRL AND HEATER PG4			1000	20	1	41		42	1	20				SPARE
SUB–TOTALS=	6100	6100	5400								4000	4000	4000	= SUB–TOTALS

	V A	AMPS
TOTAL PHASE A=	10100	45.9
TOTAL PHASE B=	10100	45.9
TOTAL PHASE C=	9400	38.18
TOTAL CONNECTED LOAD	29.6	KVA
DEMANDED FACTOR	0.90	
DEMANDED LOAD	26.64	KVA
20% FUTURE LOAD	5.32	KVA
TOTAL LOAD	31.96	KVA
TOTAL AMPERE	48.57	AMP

DRAWING NOT TO SCALE

SYMBOL	DESCRIPTION	DATE	APR

DESIGNED BY: XXX
DWN BY: XXX
CHK BY: XXX
DATE: 06-27-07
SUBMITTED BY: R. CREWAL, CHIEF, PDT BLDG SYSTEMS
FILE NO.: AF07070-PP-E-13

US Army Corps of Engineers Transatlantic Programs Center

ANA REGIONAL BRIGADE
PAKTIKA, AFGHANISTAN

POWER PLANT
ELECTRICAL PANEL SCHEDULES

SHEET REFERENCE NUMBER:
PP–E–13

$(getvar, "dwgprefix")$(getvar, "dwgname")$(edtime, 0, MON DD", YYYY – H:MMam/pm)

PANEL–PP2

AIC: 25KA ISC/0.5SEC

100A MLO

VOLTAGE 380/220V, 3PH, 5W, 50HZ

FEED TOP

MOUNTING SURFACE

LOCATION PP SWITCHGEAR RM.

FED FROM PNL–PPS

DESCRIPTION	LOAD (VA) A	B	C	AMP	POLE	CKT	A	B	C	CKT	POLE	AMP	LOAD (VA) A	B	C	DESCRIPTION
CONTROL PANEL FOR EXHAUST& INTAKE DAMPERS OF PG1	1000			20	1	1				2	3	30	3333			FUEL OIL TRANSFER PUMP PACKAGE P–1,P–2
CONTROL PANEL FOR EXHAUST& INTAKE DAMPERS OF PG2		1000		20	1	3				4				3333		
CONTROL PANEL FOR EXHAUST& INTAKE DAMPERS OF PG3			1000	20	1	5				6					3333	
CONTROL PANEL FOR EXHAUST& INTAKE DAMPERS OF PG4	1000			20	1	7				8	3	40	6666			FUEL OIL OF LOADING PUMP PACKAGE P–3,P–4
CONTROL PANEL FOR EXHAUST& INTAKE DAMPERS OF PG5		1000		20	1	9				10				6666		
SPACE FOR CONTROL PANEL FOR EXHAUST&INTAKE DAMPERS OF PG6			1000	20	1	11				12					6666	
SPACE FOR CONTROL PANEL FOR EXHAUST&INTAKE DAMPERS OF PG7	1000			20	1	13				14	3	40				SPARE
DIGITAL CONTROLLER FOR THE BULK TANKS (TMS 3000)		1000		20	1	15				16						
SPARE				20	1	17				18						
SPARE				20	1	19				20	1	20				SPARE
SPARE				20	1	21				22	1	20				SPARE
SPARE				20	1	23				24	1	20				SPARE
SUB–TOTALS=	3000	3000	2000										10000	10000	10000	= SUB–TOTALS

	V A	AMPS
TOTAL PHASE A=	13000	59.09
TOTAL PHASE B=	13000	59.05
TOTAL PHASE C=	12000	54.54
TOTAL CONNECTED LOAD	38	KVA
DEMAND FACTOR	0.90	
DEMAND LOAD	34.2	KVA
20% FUTURE LOAD	6.84	KVA
TOTAL LOAD	41.04	KVA
TOTAL AMPERE	62.35	AMP

PANEL PP3

AIC: 25KA ISC/0.5SEC

250A MLO

VOLTAGE 380/220V, 3PH, 5W, 50HZ

FEED TOP

MOUNTING SURFACE

LOCATION PP SWITCHGEAR RM.

FED FROM PPL–PPS

DESCRIPTION	LOAD (VA) A	B	C	AMP	POLE	CKT	A	B	C	CKT	POLE	AMP	LOAD (VA) A	B	C	DESCRIPTION
GEN. BATTERY CHARGER PG–1	1600			20	1	1				2	1	20	1600			GEN. BATTERY CHARGER PG–4
JACKET WTR. HTR. PG–1		6500		40	1	3				4	1	40		6500		JACKET WTR. HTR. PG–4
JACKET WTR. HTR. PG–1			6500	40	1	5				6	1	40			6500	JACKET WTR. HTR. PG–4
JACKET WTR. HTR. PG–2	6500			40	1	7				8	1	40	6500			JACKET WTR. HTR. PG–5
JACKET WTR. HTR. PG–2		6500		40	1	9				10	1	40		6500		JACKET WTR. HTR. PG–5
GEN. BATTERY CHARGER PG–2			1600	40	1	11				12	1	20			1600	GEN. BATTERY CHARGER PG–5
JACKET WTR. HTR. PG–3	6500			40	1	13				14	1	40	6500			JACKET WTR. HTR. BG–1
GEN. BATTERY CHARGER		1600		20	1	15				16	1	20		1600		GEN. BATTERY CHARGER BG–1
JACKET WTR. HTR. PG–3			6500	40	1	17				18	1	40			6500	JACKET WTR. HTR. BG–1
SPARE				20	1	19				20	1		1600			SPACE FOR GEN. BATTERY CHARGER PG–6
SPARE				80	1	21				22	1			6500		SPACE FOR JACKET WTR. HTR. PG–6
SPARE				20	1	23				24	1				6500	SPACE FOR JACKET WTR. HTR. PG–6
SPARE				20	1	25				26	1		6500			SPACE FOR JACKET WTR. HTR. PG–7
SPARE				20		27				28	1			6500		SPACE FOR JACKET WTR. HTR. PG–7
SPACE						29				30	1				1600	SPACE FOR GEN. BATTERY CHARGER PG–7
SUB–TOTALS=	14600	14600	14600										22700	27600	22700	= SUB–TOTALS

	V A	AMPS
TOTAL PHASE A=	37300	169.54
TOTAL PHASE B=	42200	191.81
TOTAL PHASE C=	37300	169.54
TOTAL CONNECTED LOAD	116.8	KVA
DEMAND FACTOR	0.9	
DEMAND LOAD	105.12	KVA
20% FUTURE LOAD	21.024	KVA
TOTAL LOAD	126.144	KVA
TOTAL AMPERE	191.655	AMP

DRAWING NOT TO SCALE

SYMBOL	DESCRIPTION	DATE	APR

DESIGNED BY: XXX
DWN BY: XXX
CHK BY: XXX
DATE: 06-27-07
SUBMITTED BY: R. CREWAL CHIEF, PP BLDG SYSTEMS
FILE NO.: AF07070-PP-E-14

US Army Corps of Engineers Transatlantic Programs Center

ANA REGIONAL BRIGADE
PAKTIKA, AFGHANISTAN

POWER PLANT

ELECTRICAL PANEL SCHEDULES

SHEET REFERENCE NUMBER:

PP–E–14

$(getvar, "dwgprefix")$(getvar, "dwgname")$(edtime, 0, MON DD",". YYYY – HHMMam/pm)

PANEL PP5

AIC: 25KA ISC/0.5SEC

125A MLO

VOLTAGE 380/220V, 3PH, 5W, 50HZ

FEED TOP

MOUNTING SURFACE

LOCATION PP SWITCHGEAR RM.

FED FROM PANEL PPS

	LOAD (VA)												LOAD (VA)			
DESCRIPTION	A	B	C	AMP	POLE	CKT	A	B	C	CKT	POLE	AMP	A	B	C	DESCRIPTION
FUEL STORAGE SYSTEM HEAT TRACE	5280			30	1	1				2	1	30	5280			FUEL STORAGE SYSTEM HEAT TRACE
FUEL STORAGE SYSTEM HEAT TRACE		5280		30	1	3				4	1	30		5280		FUEL STORAGE SYSTEM HEAT TRACE
FUEL STORAGE SYSTEM HEAT TRACE			5280	30	1	5				6	1	30			5280	FUEL STORAGE SYSTEM HEAT TRACE
FUEL STORAGE SYSTEM HEAT TRACE	5280			30	1	7				8	1	30	448			DAY TANK HEAT TRACE
DAY TANK HEAT TRACE		448		30	1	9				10	1	30		5280		FUEL STORAGE SYSTEM HEAT TRACE
PLANT HEAT TRACE			448	30	1	11				12	1	30			448	PLANT HEAT TRACE
DAY TANK HEAT TRACE	448			30	1	13				14	1	30	448			DAY TANK HEAT TRACE
DAY TANK HEAT TRACE		448		30	1	15				16	1	30		448		DAY TANK HEAT TRACE
PLANT HEAT TRACE			448	30	1	17				18	1	30			448	PLANT HEAT TRACE
DAY TANK HEAT TRACE	448			30	1	19				20	1	30	448			DAY TANK HEAT TRACE
DAY TANK HEAT TRACE		448		30	1	21				22	1	30		448		DAY TANK HEAT TRACE
DAY TANK HEAT TRACE			448	30	1	23				24	1				448	SPACE FOR DAY TANK HEAT TRACE
SPARE				30	1	25				26	1		448			SPACE FOR DAY TANK HEAT TRACE
SPARE				30	1	27				28	1			448		SPACE FOR DAY TANK HEAT TRACE
SPARE				30	1	29				30	1				448	SPACE FOR DAY TANK HEAT TRACE
SPARE				30	1	31				32	1	30				SPARE
SPARE				30	1	33				34	1	30				SPARE
SPARE				30	1	35				36	1	30				SPARE
SPARE				30	1	37				38	1	30				SPARE
SPARE				30	1	39				40						SPACE
SPARE				30	1	41				42						SPACE
SUB-TOTALS=	11456	6624	6624										7072	11904	7072	= SUB-TOTALS

	V A	AMPS
TOTAL PHASE A=	18528	84.2
TOTAL PHASE B=	18528	84.2
TOTAL PHASE C=	13696	62.25
TOTAL CONNECTED LOAD	50.73	KVA
DEMANDED FACTOR	0.90	
DEMANDED LOAD	45.65	KVA
20% FUTURE LOAD	9.131	KVA
TOTAL LOAD	54.78	KVA
TOTAL AMPERE	83.23	AMP

DRAWING NOT TO SCALE

SYMBOL	DESCRIPTION	DATE	APR

DESIGNED BY: XXX
DATE: 06-27-07
DWN BY: XXX
SUBMITTED BY: R. GREWAL CHIEF, PD/ BLDG SYSTEMS
CHK BY: XXX
FILE NO.: AF0707 0-PP-E-15

US Army Corps of Engineers Transatlantic Programs Center

ANA REGIONAL BRIGADE
PAKTIKA, AFGHANISTAN

POWER PLANT
ELECTRICAL PANEL SCHEDULES

SHEET REFERENCE NUMBER:
0
PP-E-15

$(getvar, "dwgprefix")$(getvar, "dwgname")$(edtime, 0, MON DD",", YYYY - HHMMam/pm)

PANEL– PP6

AIC: 25KA ISC/0.5SEC

200A MLO

VOLTAGE 380/220V, 3PH, 5W, 50HZ

FEED TOP

MOUNTING SURFACE

LOCATION PP SWITCHGEAR RM.
FED FROM PANEL PPS

DESCRIPTION	LOAD (VA) A	LOAD (VA) B	LOAD (VA) C	AMP	POLE	CKT	A B C	CKT	POLE	AMP	LOAD (VA) A	LOAD (VA) B	LOAD (VA) C	DESCRIPTION
SPARE				20	1	1		2	1	20	500			FOR FUTURE SELF SMOKE DETECTOR
BAY LTG		937.5		20	1	3		4	1	20		800		RECP.
BAY LTG			937.5	20	1	5		6	1	20			1400	RECP.
SPARE				20	1	7		8	1	20	900			FOR FUTURE SELF SMOKE DETECTOR
EF–PP–01& GRAVITY ROOF DAMPER		350		20	1	9		10	1	20		700		LTG.
EF–PP–02			250	20	1	11		12	1	20			1200	RECP.
EWH–PP–1	3000			20	1	13		14	1	20				SPARE
LTG		950		20	1	15		16	1	20		600		LTG.
BAY LTG			937.5	20	1	17		18	1	20			180	TTC RECP
	8627.5					19		20	1	20	180			TTC RECP
AC–PP–01		8627.5		50	3	21		22				11750		
			8627.5			23		24	3	70			11750	PU–PP–1
SPARE				20	1	25		26			11750			
SPARE				20	1	27		28	1	20		1000		CONTROL PANEL FOR EXHAUST& INTAKE DAMPERS OF BG1
EGRESS LTG			600	20	1	29		30	1	20				SPARE
	1000					31		32	1	20				SPARE
UH–1		1000		20	3	33		34	1	20				SPARE
			1000			35		36	1	20			400	FUEL OIL,WAST OIL ALARM ANN. PANEL
SPARE				20	1	37		38	1	20				SPARE
SPARE				25	1	39		40	1	20				SPARE
SPARE				20	1	41		42	1	20			1100	LTG
SPARE				20	1	43		44						SPACE
SUB–TOTALS=	12627.5	11865	12352.5								13330	14850	16030	= SUB–TOTALS

	V A	AMPS
TOTAL PHASE A=	25957.5	118
TOTAL PHASE B=	26715	121.43
TOTAL PHASE C=	28382.5	129
TOTAL CONNECTED LOAD	81.05	KVA
DEMAND FACTOR	1	
DEMAND LOAD	81.05	KVA
20% FUTURE LOAD	16.21	KVA
TOTAL LOAD	97.26	KVA
TOTAL AMPERE	147.94	AMP

GENERAL NOTES:

1. 3x10mm² Cu,PVC/PVC INSIDE 2" PVC, CONDUIT
2. 4x35mm² Cu,PVC/PVC+10mm² GND. INSIDE 2" PVC, CONDUIT
3. 4x50mm² Cu, PVC/PVC+16mm² GND. INSIDE 2" PVC, CONDUIT
4. 4x120mm² Cu,PVC/PVC+25mm² GND. INSIDE 3" PVC, CONDUIT
5. 2{4x120mm² Cu,PVC/PVC+35mm² GND} INSIDE 2x3" PVC, CONDUIT
6. 4x300mm² Cu,PVC/PVC+50mm² GND INSIDE 4" PVC, CONDUIT
7. 4x70mm² Cu, PVC/PVC+25mm² GND. INSIDE 2" PVC, CONDUIT

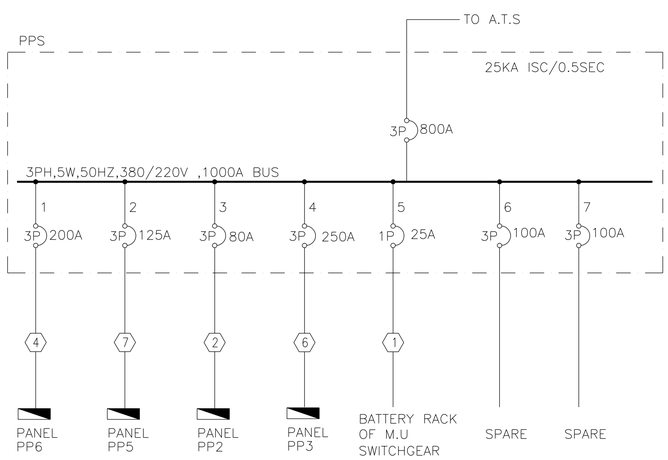

1 PANEL PPS

PP–E–16 SCALE: N.T.S

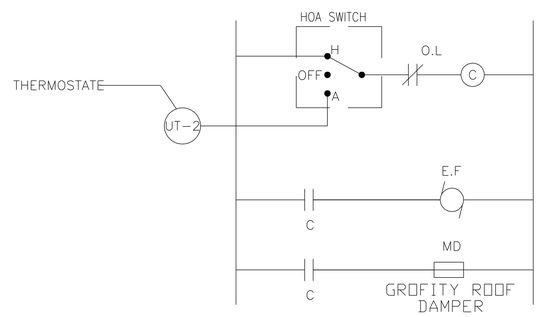

CONTROL DIAGRAM

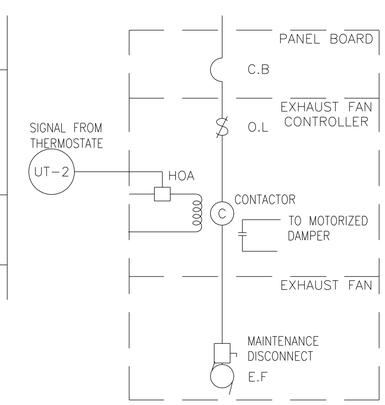

POWER CONNECTION

2 EXHAUST FAN# 1 CONTROLLER SCHEMATIC DIAGRAM DETAIL#1

PP–E–16 SCALE: N.T.S

DRAWING NOT TO SCALE

SYMBOL	DESCRIPTION	DATE	APR

DESIGNED BY: XXX
DWN BY: XXX
CHK BY: XXX
DATE: 06-27-07
SUBMITTED BY: R. CREWAL CHIEF, PROJ. BLDG. SYSTEMS
FILE NO.: AF0707O-PP-E-16

US Army Corps of Engineers Transatlantic Programs Center

ANA REGIONAL BRIGADE
PAKTIKA, AFGHANISTAN

POWER PLANT
ELECTRICAL PANEL SCHEDULES AND RISER DIAGRAM

SHEET REFERENCE NUMBER:
PP–E–16

$(getvar, "dwgprefix")$(getvar, "dwgname")$(edtime, O, MON DD", YYYY – H:MMam/pm)

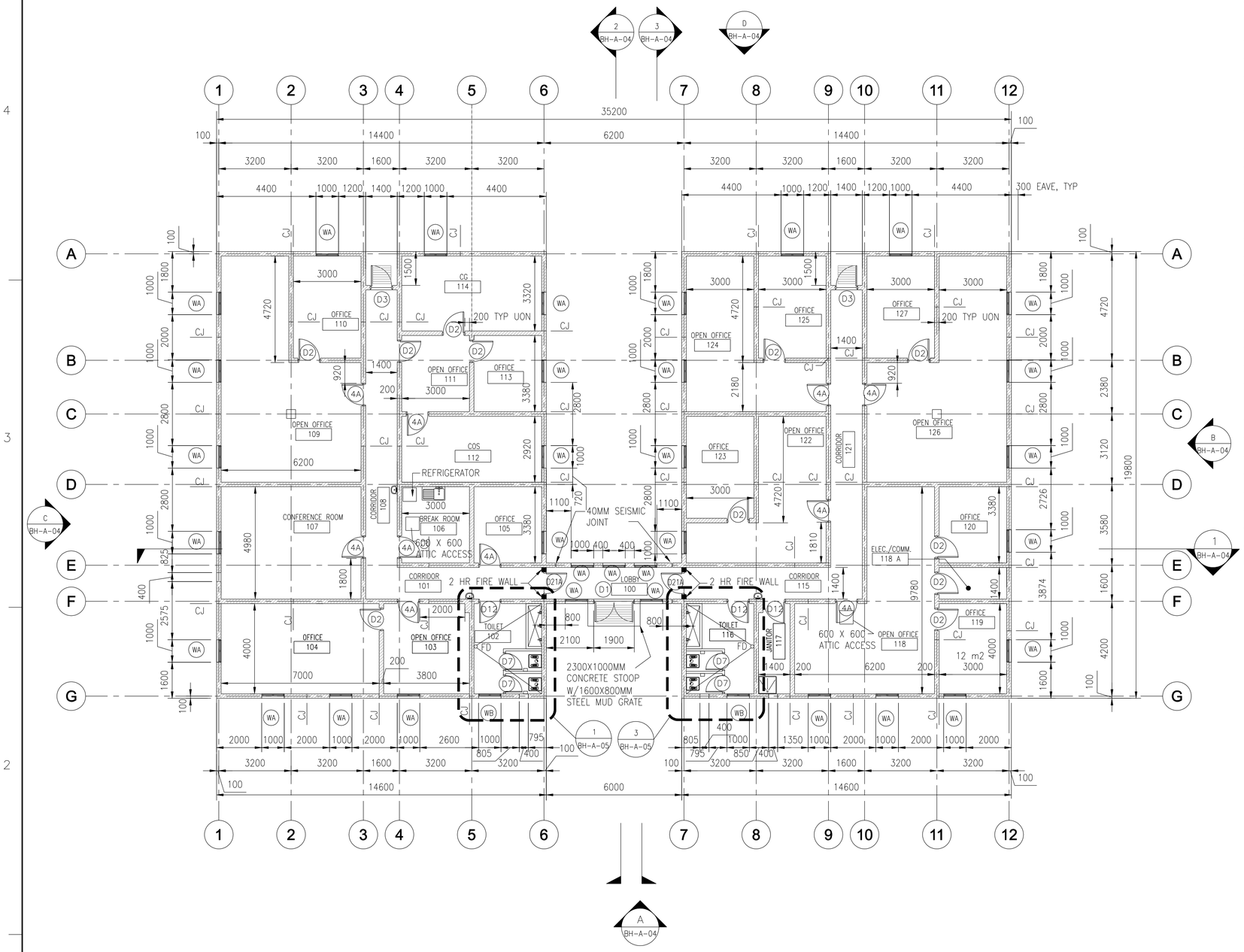

1 FLOOR PLAN

BH-A-01 SCALE: 1:100

FINISHING SCHEDULE

Room No.	Usage	Floor	Wall	Ceiling
100	LOBBY	F2	W1	C1
101	CORRIDOR	F2	W1	C1
102	TOILET	F3	W1,W2	C3
103	OPEN OFFICE	F2	W1	C1
104	OFFICE	F2	W1	C1
105	OFFICE	F2	W1	C1
106	BREAK ROOM	F2	W1	C1
107	CONFERENCE	F2	W1	C1
108	CORRIDOR	F2	W1	C1
109	OPEN OFFICE	F2	W1	C1
110	OFFICE	F2	W1	C1
111	OPEN OFFICE	F2	W1	C1
112	COS	F2	W1	C1
113	OFFICE	F2	W1	C1
114	CG	F2	W1	C1
115	CORRIDOR	F2	W1	C1
116	TOILET	F3	W1,W2	C3
117	JANITOR	F3	W1,W2	C1
118	OPEN OFFICE	F2	W1	C1
118A	ELEC./COMM.	F1	W1	C1
119	OFFICE	F2	W1	C1
120	OFFICE	F2	W1	C1
121	CORRIDOR	F2	W1	C1
122	OPEN OFFICE	F2	W1	C1
123	OFFICE	F2	W1	C1
124	OPEN OFFICE	F2	W1	C1
125	OFFICE	F2	W1	C1
126	OPEN OFFICE	F2	W1	C1
127	OFFICE	F2	W1	C1

FINISHING SCHEDULE LEGEND

FLOOR

F1	SEALED CONCRETE
F2	300MMX300MM TERRAZZO TILE
F3	CERAMIC TILE

WALL

W1	WHITE PAINTED PLASTER
W2	150MMX150MM GLAZED CERAMIC TILES UP TO 2000MM AFF

CEILING

C1	GYPSUM BOARD – PAINTED
C3	MOISTURE RESISTANT GYPSUM BOARD – PAINTED

WALL SYMBOLS:

CMU WALL

CMU LOW HEIGHT WALL +/– 2000 MM WITH CERAMIC TILE FINISH

2 HR RATED TO ROOF CMU FIRE SEPERATION WALL.

CJ CMU CONTROL JOINT

NOTES:

1– ALL WALLS ARE 200MM THK. CMU UNLESS NOTED OTHERWISE.

2– ALL WALLS TERMINATE AT CEILING UNLESS NOTED OTHERWISE. REF. STRUCT. DRWGS.

3– ALL DOOR JAMBS ARE 200MM UNLESS OTHERWISE NOTED.

4– ALL DIMENSIONS ARE TO FACE OF CMU UNLESS NOTED OTHERWISE.

5– ALL VERTICAL DIMENSIONS & LEVELS ARE FROM GROUND FLOOR FINISHED SLAB. THIS ELEVATION IS +0000.

6– SEE DRAWING CO–A–05 & CO–A–06 FOR OPENING SCHEDULES & TYPES.

7– SEE DRAWING CO–A–02, CO–A–03 & CO–A–04 FOR STANDARD DETAILS.

8– SEE STRUCTURAL DRAWINGS FOR LOCATION OF BUILDING CONTROL, EXPANSION AND SEISMIC JOINTS.

10– ALL HVAC OPENINGS DIMENSION SHALL BE VERIFIED WITH APPROVED SUBMITTALS.

11– TOTAL AREA OF BUILDING IS 588.90 M2.

12– DEPRESS STRUCTURAL SLAB 50MM WHERE F2 OR F3 FLOOR FINISHES ARE SCHEDULED.

NOTE:

ORIENT BUILDING ON SITE SUCH THAT TOILETS ARE ON A NORTH/SOUTH ACCESS.

1 0 1 2 3 4 5 6 7 8 9
1:100

SYMBOL	DESCRIPTION	DATE	APR

DESIGNED BY: YSK
DWN BY: JSG
CHK BY: PLD
DATE: 06-27-07
SUBMITTED BY: CHIEF, PORTFOLIO MANAGEMENT DIV
FILE NO.: AF0707PE-BH-A-01

US Army Corps of Engineers Transatlantic Programs Center

ANA REGIONAL BRIGADE
PAKTIKA, AFGHANISTAN

BRIGADE HQ BUILDING
FLOOR PLAN

SHEET REFERENCE NUMBER:
PE
BH–A–01

$(getvar, "dwgprefix")$(getvar, "dwgname")$(edtime, 0, MON DD"," YYYY – HHMMam/pm)

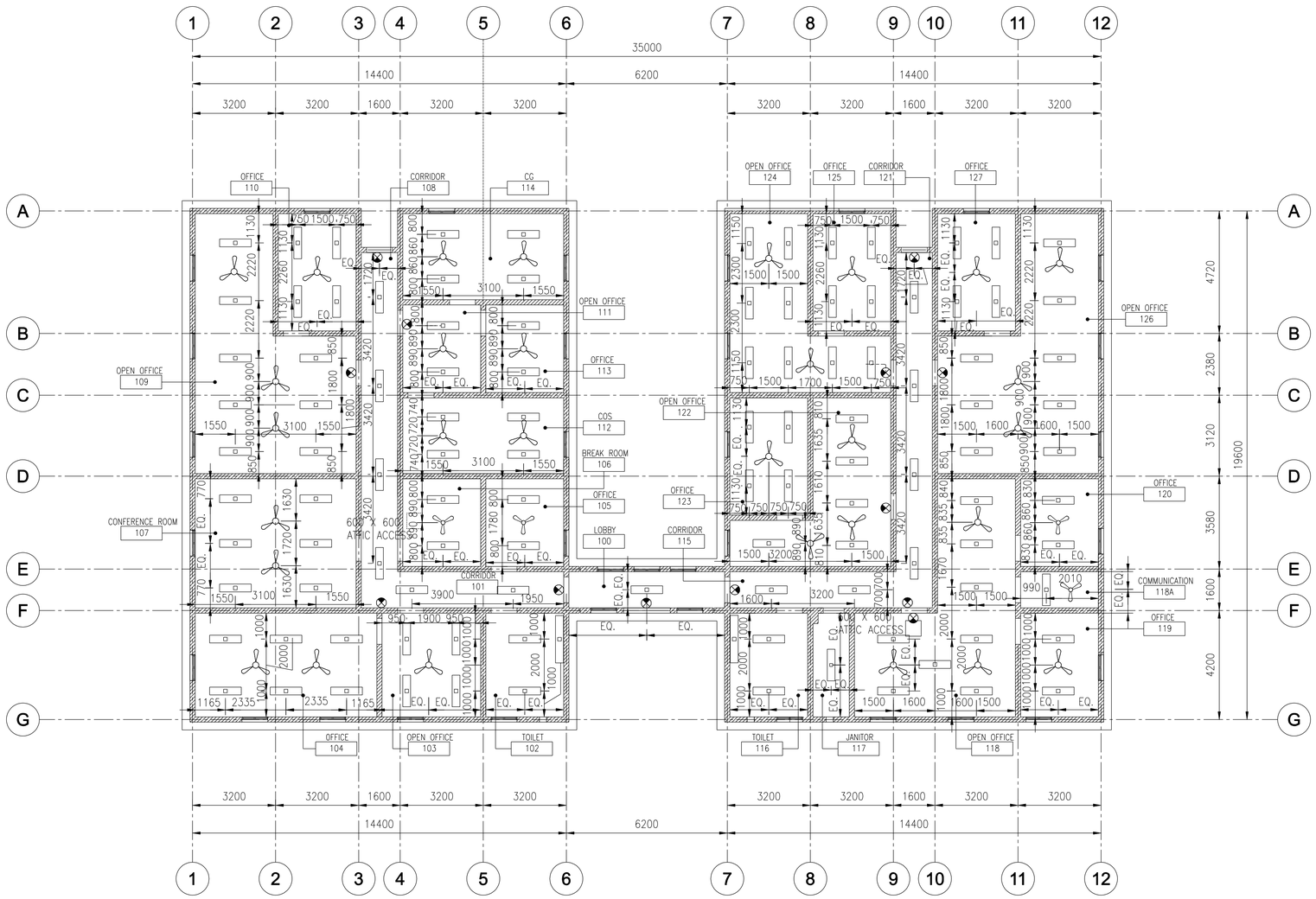

1 REFLECTED CEILING PLAN

BH-A-02 SCALE: 1:100

NOTES:

1- SEE SHEET BH-A-01 FOR FINISH SCHEDULE.
2- SEE SHEET CO-E-01 FOR LIGHTING LEGEND.
3- SEE SHEET BH-E-04 FOR EXIT SIGN LOCATIONS.

1 0 1 2 3 4 5 6 7 8 9
1:100

SYMBOL	DESCRIPTION	DATE	APR

DESIGNED BY: YSK
DATE: 06-27-07
DWN BY: JSG
SUBMITTED BY: CHIEF, PANEL HQ CHIEF, PROJ FACILITIES DEV
CHK BY: PLD
FILE NO.: AF0707PE-BH-A-02

US Army Corps of Engineers Transatlantic Programs Center

ANA REGIONAL BRIGADE
PAKTIKA, AFGHANISTAN

BRIGADE HQ BUILDING
REFLECTED CEILING PLAN

SHEET REFERENCE NUMBER:
PE
BH-A-02

$(getvar, "dwgprefix")$(getvar, "dwgname")$(edtime, O, MON DD", " YYYY - HHMMam/pm)

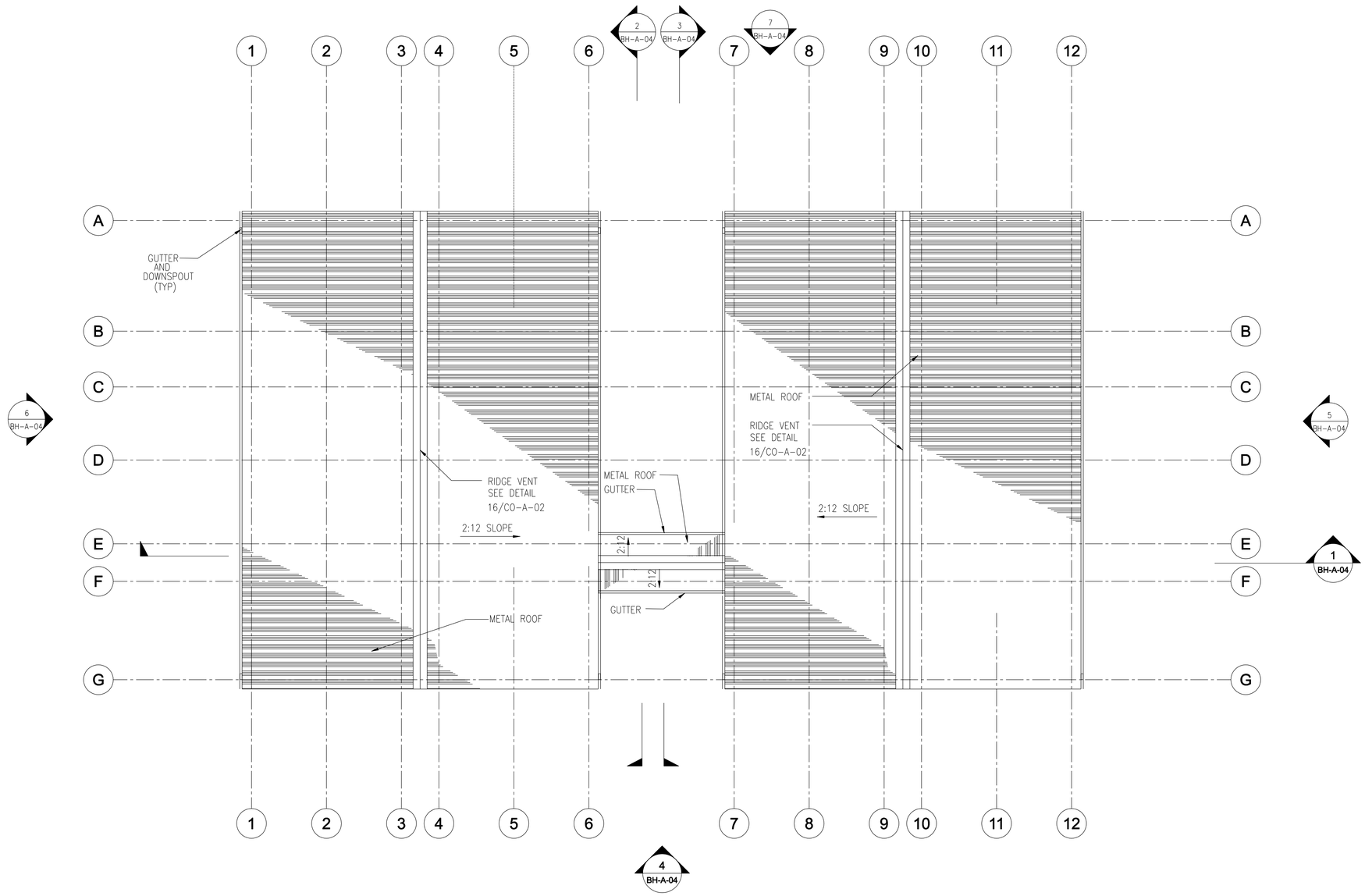

1 ROOF PLAN

BH-A-03 SCALE: 1:100

1:100

SYMBOL	DESCRIPTION	DATE	APR

DESIGNED BY: YSK
DWN BY: JSG
CHK BY: PLD
DATE: 06-27-07
SUBMITTED BY: CHIEF, PROJECTS DEV
FILE NO.: AF0707PE-BH-A-03

US Army Corps of Engineers Transatlantic Programs Center

ANA REGIONAL BRIGADE
PAKTIKA, AFGHANISTAN

BRIGADE HQ BUILDING
ROOF PLAN

SHEET REFERENCE NUMBER:
PE
BH-A-03

$(getvar, "dwgprefix")$(getvar, "dwgname")$(edtime, 0, MON DD", YYYY - HH:MMam/pm)

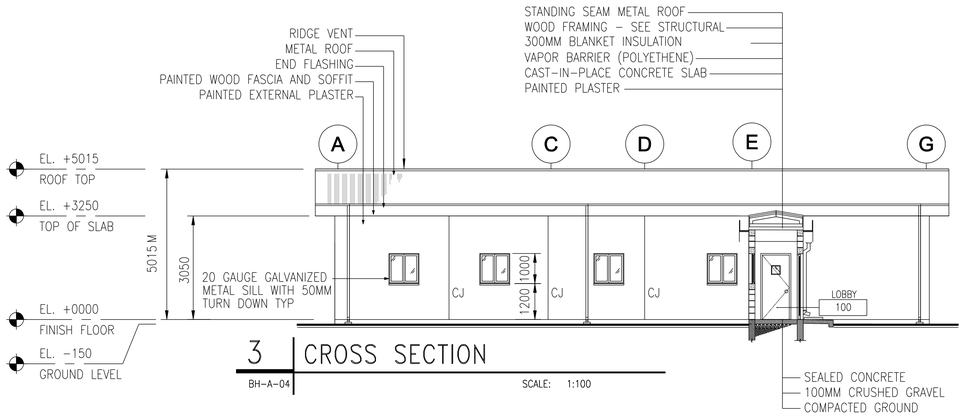

3 CROSS SECTION

BH-A-04 SCALE: 1:100

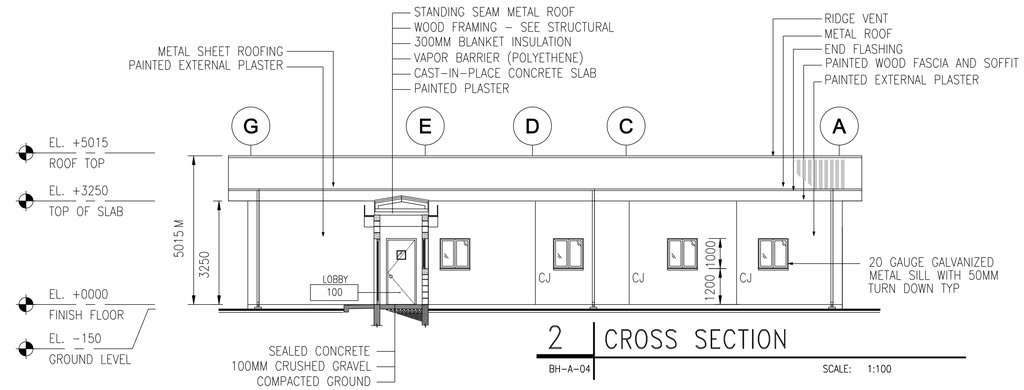

2 CROSS SECTION

BH-A-04 SCALE: 1:100

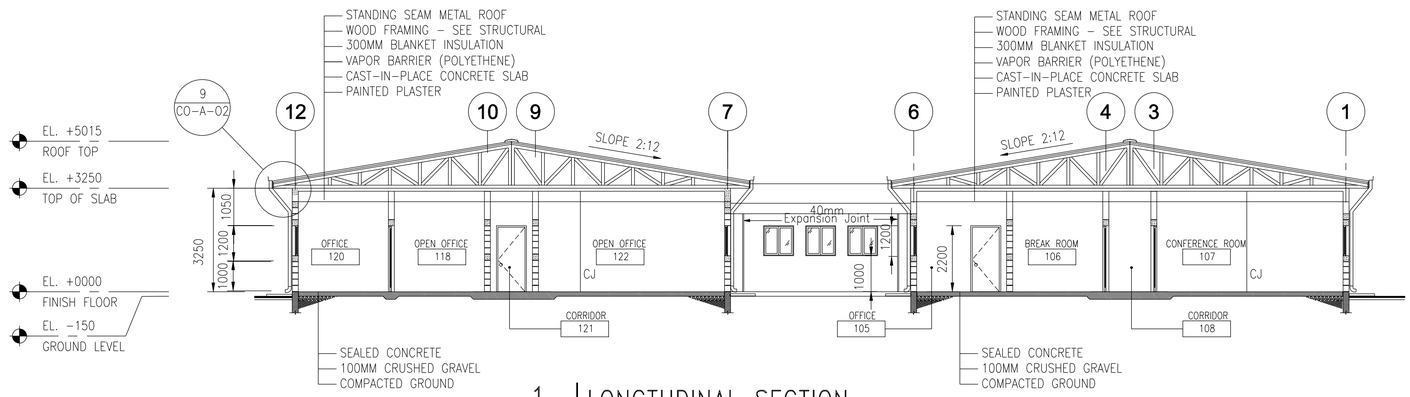

1 LONGTUDINAL SECTION

BH-A-04 SCALE: 1:100

NOTE:

- ALL HVAC OPENINGS DIMENSION SHALL BE VERIFIED WITH APPROVED SUBMITTALS.

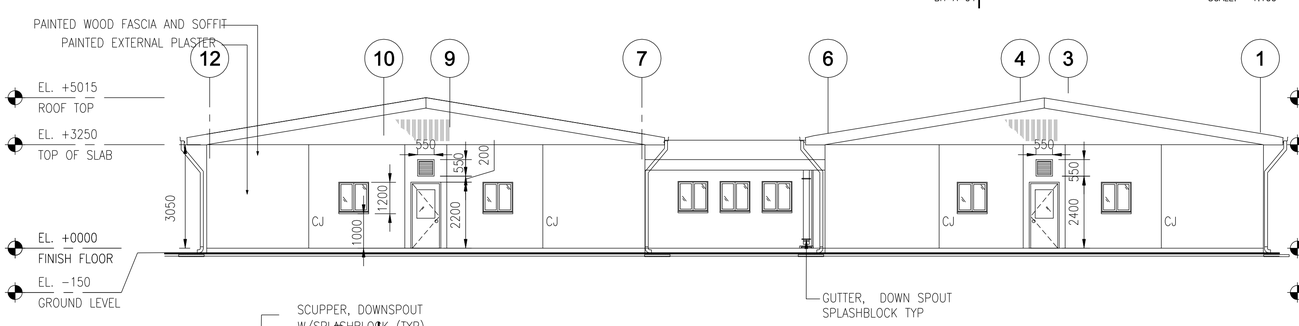

D REAR ELEVATION

BH-A-04 SCALE: 1:100

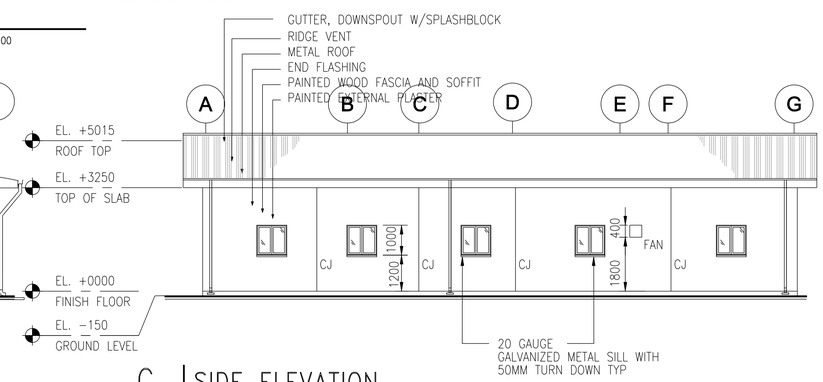

C SIDE ELEVATION

BH-A-04 SCALE: 1:100

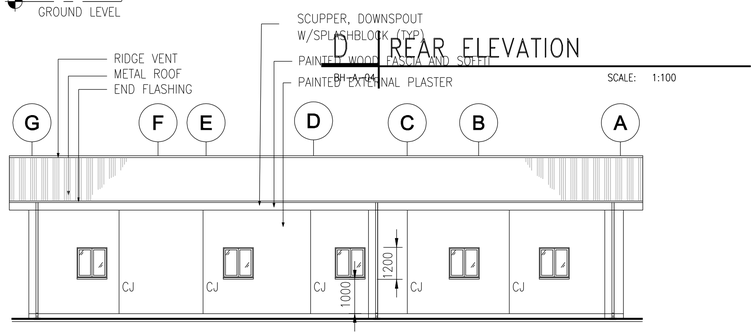

B SIDE ELEVATION

BH-A-04 SCALE: 1:100

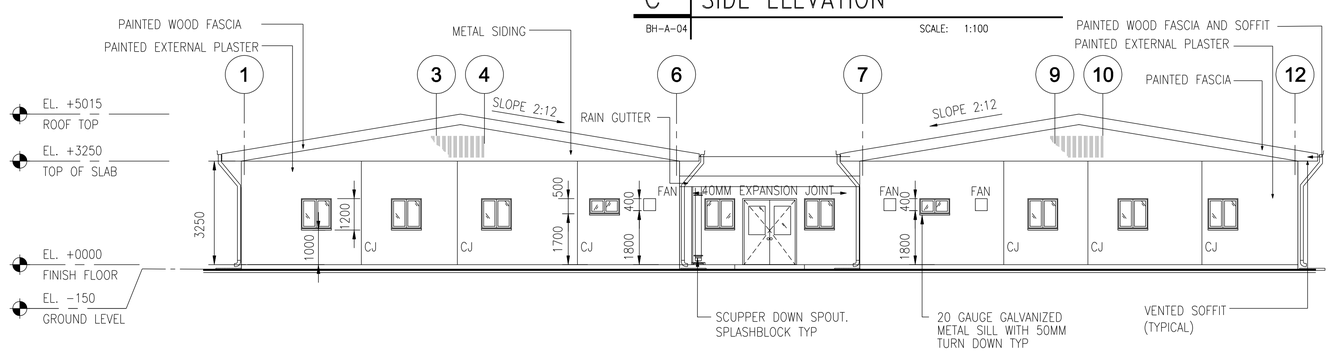

A FRONT ELEVATION

BH-A-04 SCALE: 1:100

1 0 1 2 3 4 5 6 7 8 9
1:100

SYMBOL	DESCRIPTION	DATE	APR

DESIGNED BY: YSK
DATE: 06-27-07
DWN BY: JSG
SUBMITTED BY: CHIEF, PANEL HQ PROJECTS DEV
CHK BY: PLD
FILE NO.: AF0707PE-BH-A-04

US Army Corps of Engineers Transatlantic Programs Center

ANA REGIONAL BRIGADE
PAKTIKA, AFGHANISTAN

BRIGADE HQ BUILDING
SECTIONS AND ELEVATIONS

SHEET REFERENCE NUMBER:
PE
BH-A-04

$(getvar, "dwgprefix")$(getvar, "dwgname")$(edtime, O, MON DD", YYYY - H:MMam/pm)

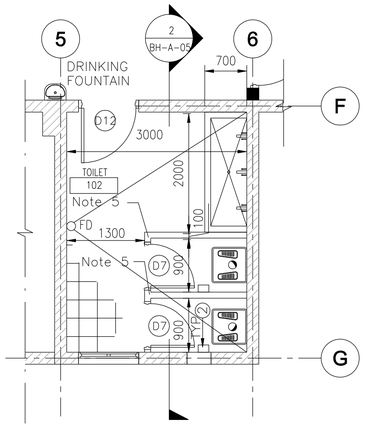

1 TOILET 102 PLAN

BH-A-05 REF. BH-A-01 SCALE: 1:50

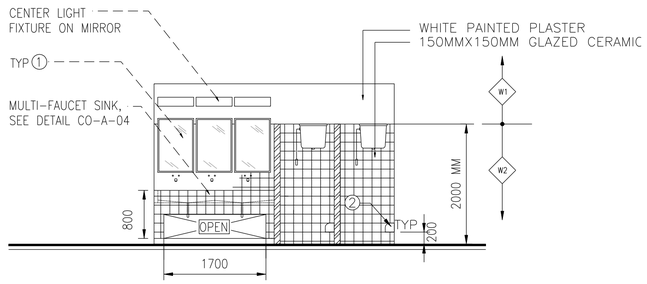

2 TOILET 102 SECTION

BH-A-05 REF. BH-A-05 SCALE: 1:50

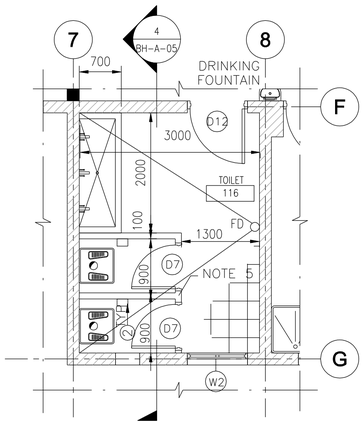

3 TOILET 116 PLAN

BH-A-05 REF. BH-A-01 SCALE: 1:50

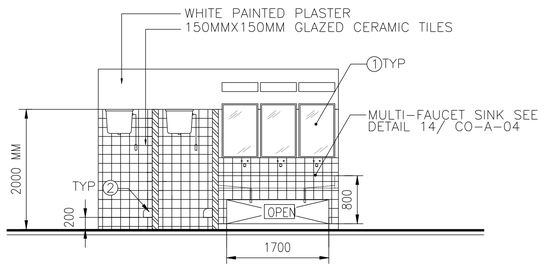

4 TOILET 116 SECTION

BH-A-05 REF. BH-A-05 SCALE: 1:50

TOILET ACCESSORY SCHEDULE

NO.	DESCRIPTION
1	MIRROR 600X900X6MM GLASS
2	STAINLESS STEEL TOILET PAPER HOLDER
3	SHOWER CURTAIN & ROD – NOT USED
4	SOAP HOLDER – NOT USED
5	METAL PEG – NOT USED

NOTES:

1– ALL WALLS ARE CMU UNLESS OTHERWISE NOTED.

2– ALL WALLS ARE UP TO CEILING LEVEL UNLESS OTHERWISE NOTED.

3– ALL DOOR JAMBS ARE 200MM UNLESS OTHERWISE NOTED.

4– ALL DIMENSIONS ARE MEASURED FROM CMU SURFACE.

5– ALL WALLS REFERRING TO NOTE 5 AND PARTITIONS BETWEEN TOILET/SHOWERS STALLS SHALL BE 2000MM HEIGHT PARTIAL WALLS TYP.

6– ALL DIMENSIONS & LEVELS ARE MEASURED FROM TOP OF GROUND FLOOR CONCRETE LEVEL ±0000.

7– SEE DRAWING CO-A-05 &CO-A-06 FOR OPENINGS SCHEDULES & TYPES.

8– SEE DRAWING CO-A-02 CO-A-03 & CO-A-04 FOR STANDARD DETAILS.

9– F.F.L. STANDS FOR FINISH FLOOR LEVEL.

1 0 1 2 3 4
1:50

SYMBOL	DESCRIPTION	DATE	APR

DESIGNED BY: YSK
DWN BY: JSG
CHK BY: PLD
DATE: 06-27-07
SUBMITTED BY: PHILIP J. PINELLO, PE
CHIEF, DEV PACTES
FILE NO.: AF0707PE-BH-A-05

US Army Corps of Engineers
Transatlantic Programs Center

ANA REGIONAL BRIGADE
PAKTIKA, AFGHANISTAN

BRIGADE HQ BUILDING
ENLARGED FLOOR PLANS AND SECTIONS

SHEET REFERENCE NUMBER:
PE
BH-A-05

$(getvar, "dwgprefix")$(getvar, "dwgname")$(edtime, 0, MON DD",", YYYY - HHMMam/pm)

NOTES:

1. ALL DIMENSIONS ARE IN MILLIMETERS .
2. SLAB ON GRADE DETAILS REFER TO SHEET CO-S-01.
3. REINFORCED STEEL BARS ARE DEFORMED HIGH GRADE STEEL BARS OF GRADE 60.(Fy=60 KSI)
4. R.C CYLINDER STRENGTH = 280 kg/cm2 AFTER 28 DAYS.
5. CONCRETE MASONRY UNITS IS ACCORDING TO ASTM C90 TYPE I (NORMAL WEIGHT, MOISTURE CONTROLLED).
6. CELLS OF CMU BLOCKS SHALL BE FULLY GROUTED WITH REBARS
7. FOR TYPICAL DETAILS REFER TO SHEETS CO-S-01 THRU CO-S-10.

FOUNDATIONS ARE DESIGNED USING AN ALLOWABLE BEARING PRESSURE OF 0.75 KG/SQ. CM (1500 PSF), AND BOTTOM OF FOOTINGS ARE PLACED AS SHOWN ON DRAWINGS. GEOTECHNICAL INVESTIGATION SHALL CONFIRM BEARING CAPACITY TO BE NO LESS THAN 0.75 KG/SQ CM. IF GEOTECHNICAL INVESTIGATION SHOWS LESS THAN 0.75 KG/SQ CM THE CONTRACTOR SHALL REDESIGN FOOTINGS BASED ON THE GEOTECHNICAL INVESTIGATION. SEE SPECIFICAITON PARAGRAPH, GEOTECHNICAL, FOUNDATION AND SURVEY.

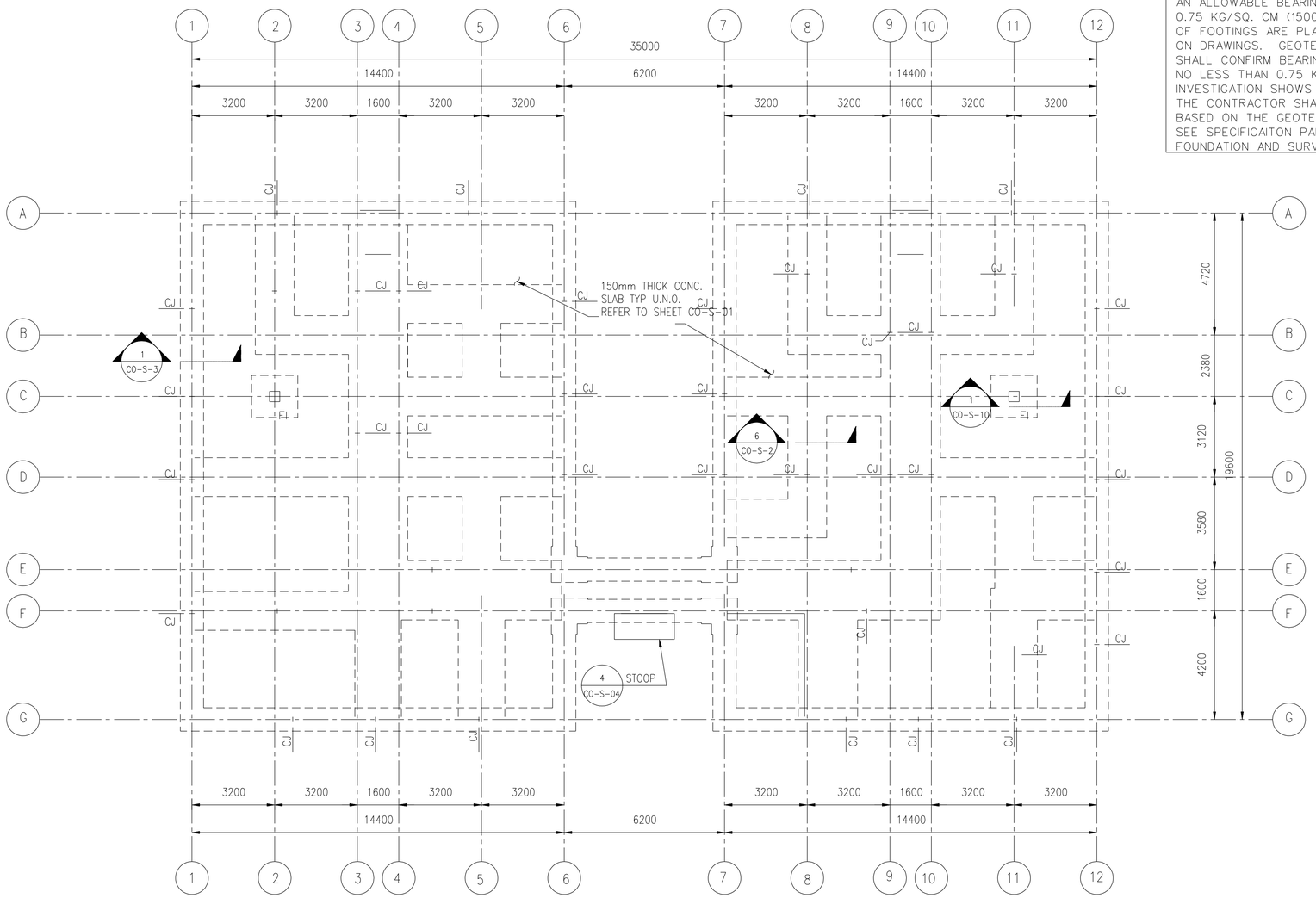

FOOTING SCHEDULE				
FTG TYPE	SIZE (L X W)	DEPTH (D)	REINF.	
			TOP EW	BOTT EW
F1	1700 x 1700	400	ø 13 @ 180	ø 16 @ 180

UNDER INTERNAL LONGITUDINAL WALL FROM AXES (F TO G)

1 0 1 2 3 4 5 6 7 8 9
1:100
0 .50 1.00
1:10

SYMBOL	DESCRIPTION	DATE	APR

DESIGNED BY: TCP
DWN BY: TCP
CHK BY: KGO
DATE: 06-27-07
SUBMITTED BY: CHIEF, PDT PANELLO PACELLES DEV
FILE NO.: AF0707 PE-BH-S-01

US Army Corps of Engineers Transatlantic Programs Center

ANA REGIONAL BRIGADE
PAKTIKA, AFGHANISTAN

BRIGADE HQ BUILDING

FONDATION PLAN AND DETAILS

SHEET REFERENCE NUMBER:
PE
BH-S-01

tvar, "dwgprefix"}$(getvar, "dwgname")$(edtime, 0, MON DD", YYYY - HH:MMam/pm)

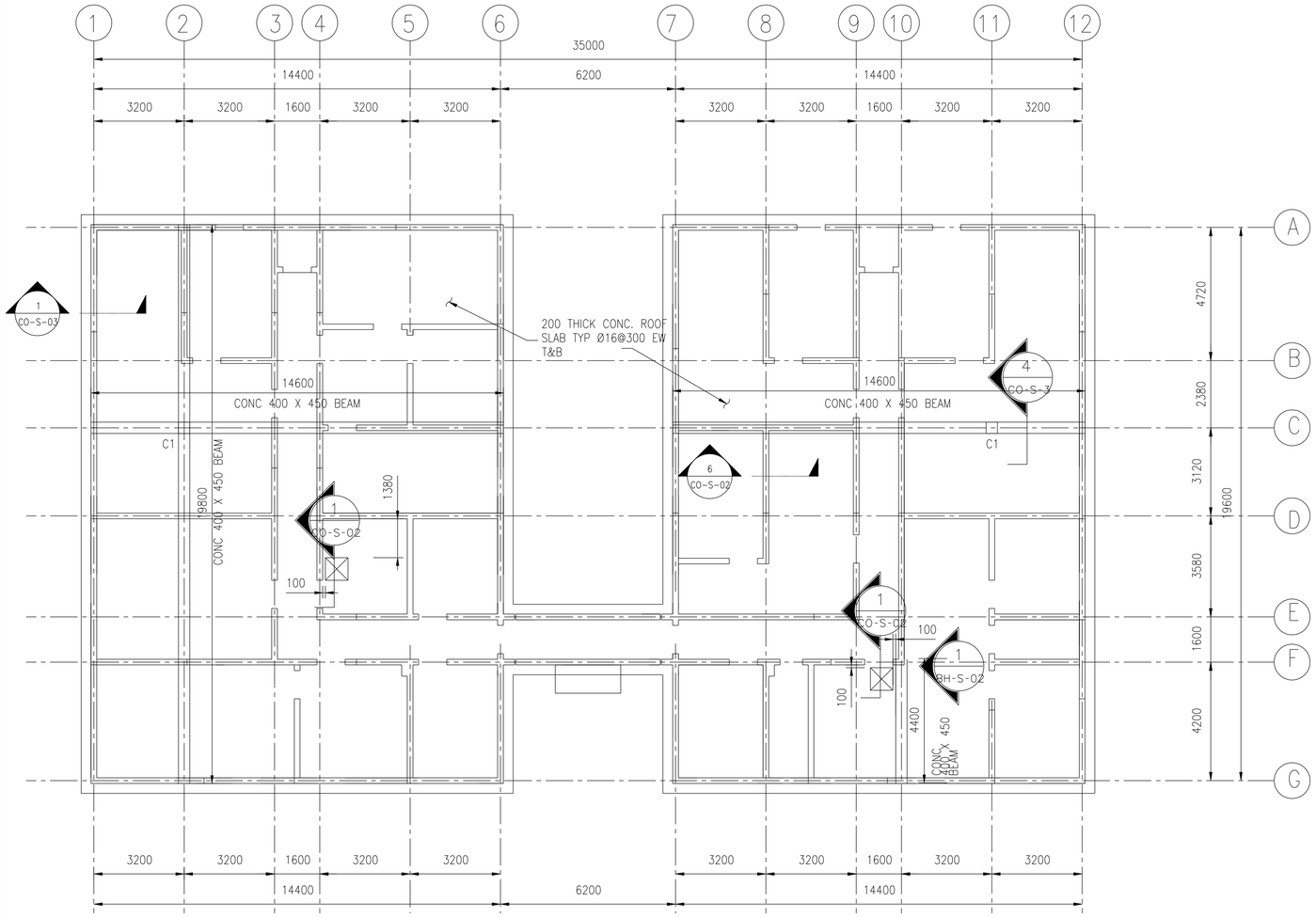

1 ROOF PLAN

BH-S-02 SCALE: 1:100

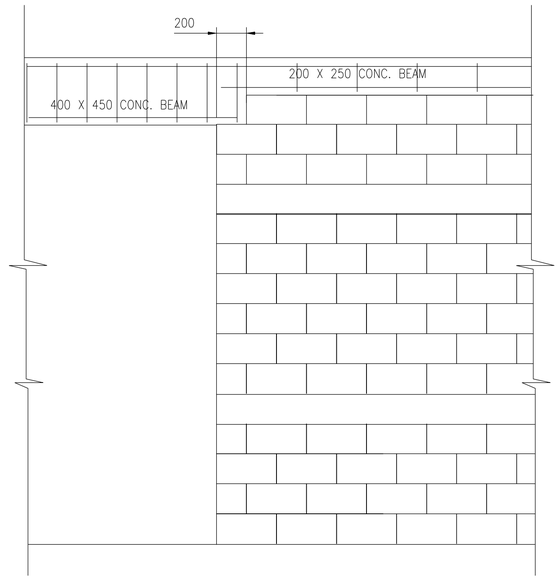

2 INTERIOR WALL TO BEAM DETAIL

BH-S-02 SCALE: 1:20

UNDER INTERNAL LONGITUDINAL WALL FROM AXES (F TO G)

1:100 — 1 0 1 2 3 4 5 6 7 8 9

1:10 — 0 .50 1.00

SYMBOL	DESCRIPTION	DATE	APR

DESIGNED BY: TCP
DWN BY: TCP
CHK BY: KGO
DATE: 06-27-07
SUBMITTED BY: PANELLO
CHIEF, PDT DEV: PANELLO
FILE NO.: AF0707PE-BH-S-02

US Army Corps of Engineers Transatlantic Programs Center

ANA REGIONAL BRIGADE
PAKTIKA, AFGHANISTAN

BRIGADE HQ BUILDING

FONDATION PLAN AND DETAILS

SHEET REFERENCE NUMBER:
PE
BH-S-02

tvor, "dwgprefix")$(getvar, "dwgname")$(edtime, 0, MON DD"", YYYY - HH:MMam/pm)

NOTES:

1. FOR STANDARD DETAILS SEE DWG. No. (CD-M-01, 02, 03 & 04).
2. FOR CONTROL DIAGRAMS SEE DWG. No. (CD-M-05).
3. FOR LEGEND AND ABBREVIATION SEE DWG. No. (CD-M-06).

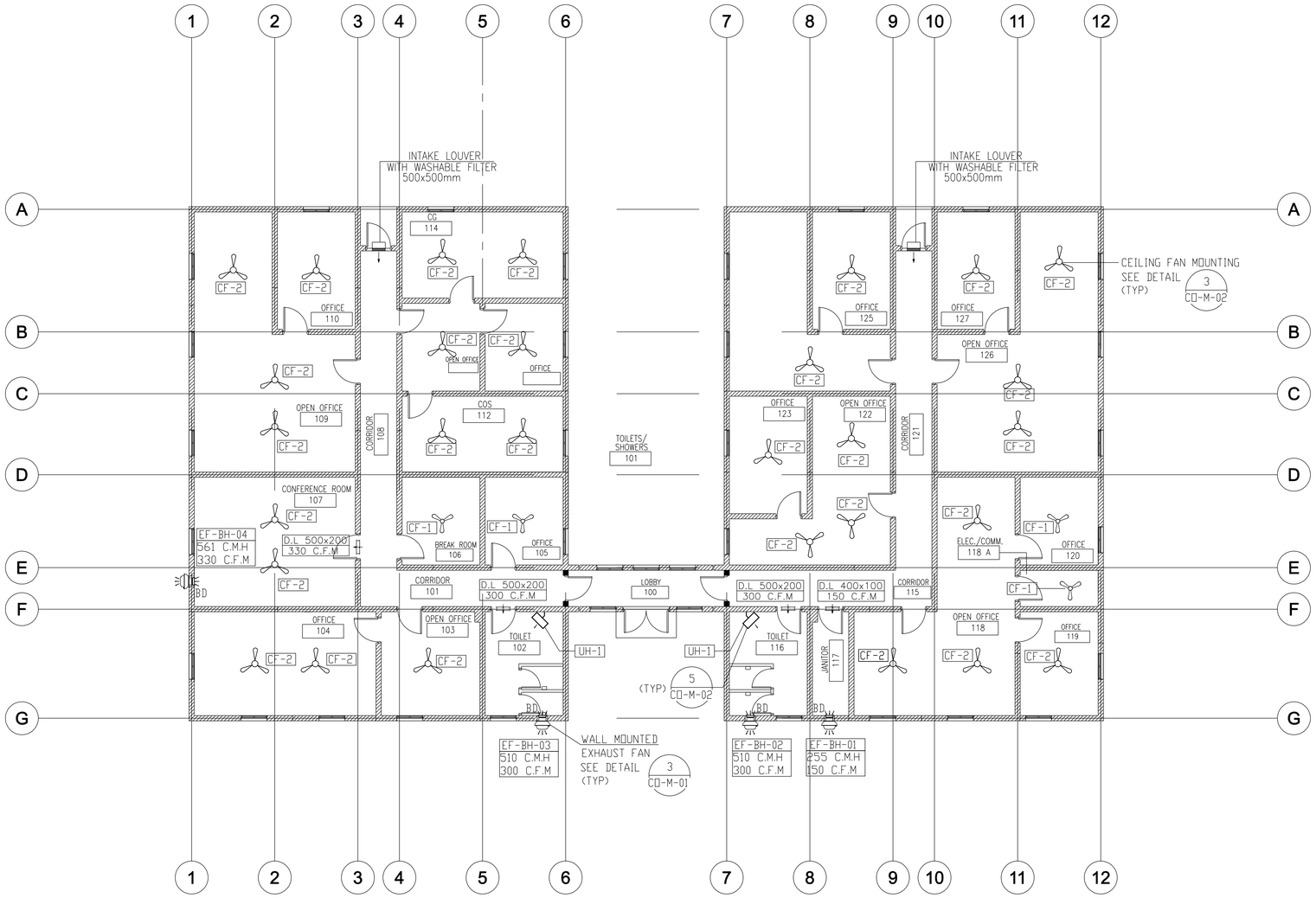

1 | MECHANICAL FLOOR PLAN
BH-M-01

SCALE: 1:100

DIESEL HEATING AND EVAPORATIVE COOLING

1 0 1 2 3 4 5 6 7 8 9
1:100 DRAWING NOT TO SCALE

SYMBOL	DESCRIPTION	DATE	APR

DESIGNED BY: XXX
DATE: 06-27-07
DWN. BY: XXX
SUBMITTED BY: R. CRESWALL CHIEF, PDT BLDG SYSTEMS
CHK. BY: XXX
FILE NO.: AF0707PE-BH-M-01

US Army Corps of Engineers Transatlantic Programs Center

ANA REGIONAL BRIGADE
PAKTIKA, AFGHANISTAN

BRIGADE HQ BUILDING
MECHANICAL FLOOR PLAN

SHEET REFERENCE NUMBER:
PE
BH-M-01

$(getvar, "dwgprefix")$(getvar, "dwgname")$(edtime, 0, MON DD",". YYYY - HHMMam/pm)

EXHAUST FAN SCHEDULE (EF)

UNIT NUMBER	SERVICE	TYPE	AIR QUANTITY		MINIMUM WHEEL DIAMETER		FAN	STATIC PRESSURE		ELECTRICAL DATA				INTERLOCK WITH	DRIVE TYPE	TEMP. CONTROL DIAGRAM	REMARKS
			CMH	CFM	MM	INCHES	RPM	mmH2O	IN W.G.	H.P.	VOLTS	PHASE	HERTZ				
EF-BH-01	JANITOR	W-CTFG-GP	255	150	-	-	1290	6.35	1/4	1/8	220	1	50		DIRECT	E-4	
EF-BH-02	BATHROOM	W-CTFG-GP	505	300	-	-	1290	6.35	1/4	1/4	220	1	50		DIRECT	E-4	
EF-BH-03	BATHROOM	W-CTFG-GP	505	300	-	-	1290	6.35	1/4	1/4	220	1	50		DIRECT	E-4	
EF-BH-04	CONFERENCE	W-CTFG-GP	505	330	-	-	1290	6.35	1/4	1/8	220	1	50		DIRECT	E-4	

FAN SCHEDULE TYPE - LEGEND
(REF. EXHAUST AND SUPPLY FAN SCHEDULES)
R-CTFG-GP

R =ROOF
W =WALL
IL =INLINE
CL =CEILING

GP = GENERAL PURPOSE
EP = EXPLOSION PROOF
DB = DOWN BLAST
UB = UP BLAST
UT = UTILITY SET

CTFG = CENTRIFUGAL
PROP = PROPELLER
TUBA = TUBE AXIAL

CEILING FAN SCHEDULE (CF)

UNIT NUMBER	QTY.	TYPE (NOTE 1)	FAN DIAMETER	MAX WATTS	ELECTRICAL DATA			REMARKS
					VOLTS	PHASE	HERTZ	
CF-1	4	A	35 in	65	220	1	50	3-SPEED
CF-2	30	A	56 in	65	220	1	50	3-SPEED

NOTES:-
1- (A) WITHOUT LIGHT FIXTURE
2- BOTTOM OF FAN MOUNTING HEIGHT = MINIMUM 2500mm A.F.F
3- PROVIDE WITH REMOTE WALL MOUNTED, ON-OFF SWITCH LOCATED ON ELECTRICAL DRAWINGS.

ELECTRIC UNIT HEATER SCHEDULE (UH)

UNIT NUMBER	QTY.	HEATING CAPACITY TOTAL (KW)	HEATING CAPACITY TOTAL (BTUH)	ELECTRICAL DATA			REMARKS
				VOLTS	PHASE	HERTZ	
UH-1	2	1.0	3414	220	1	50	WALL SUSPENDED

MINIMUM REQUIREMENT FOR UNIT HEATER IS 1 KW, 2 KW SUBSTITUTE WILL BE ACCEPTABLE.
MANUFACTURER SHALL PROVIDE BUILT-IN THERMOSTAT/ON-OFF SWITCH WITH OVERLOAD PROTECTION.

DRAWING NOT TO SCALE

SYMBOL	DESCRIPTION	DATE	APR

DESIGNED BY: XXX
DWN BY: XXX
CHK BY: XXX
DATE: 06-27-07
SUBMITTED BY: R. GREWAL
CHIEF, DIV. BLDG SYSTEMS
FILE NO.: AF0707PE-BH-M-02

US Army Corps of Engineers
Transatlantic Programs Center

ANA REGIONAL BRIGADE
PAKTIKA, AFGHANISTAN

BRIGADE HQ BUILDING
SCHEDULES

SHEET REFERENCE NUMBER:
PE
BH-M-02

$(getvar, "dwgprefix")$(getvar, "dwgname")$(edtime, 0, MON DD"," YYYY - H:MMam/pm)

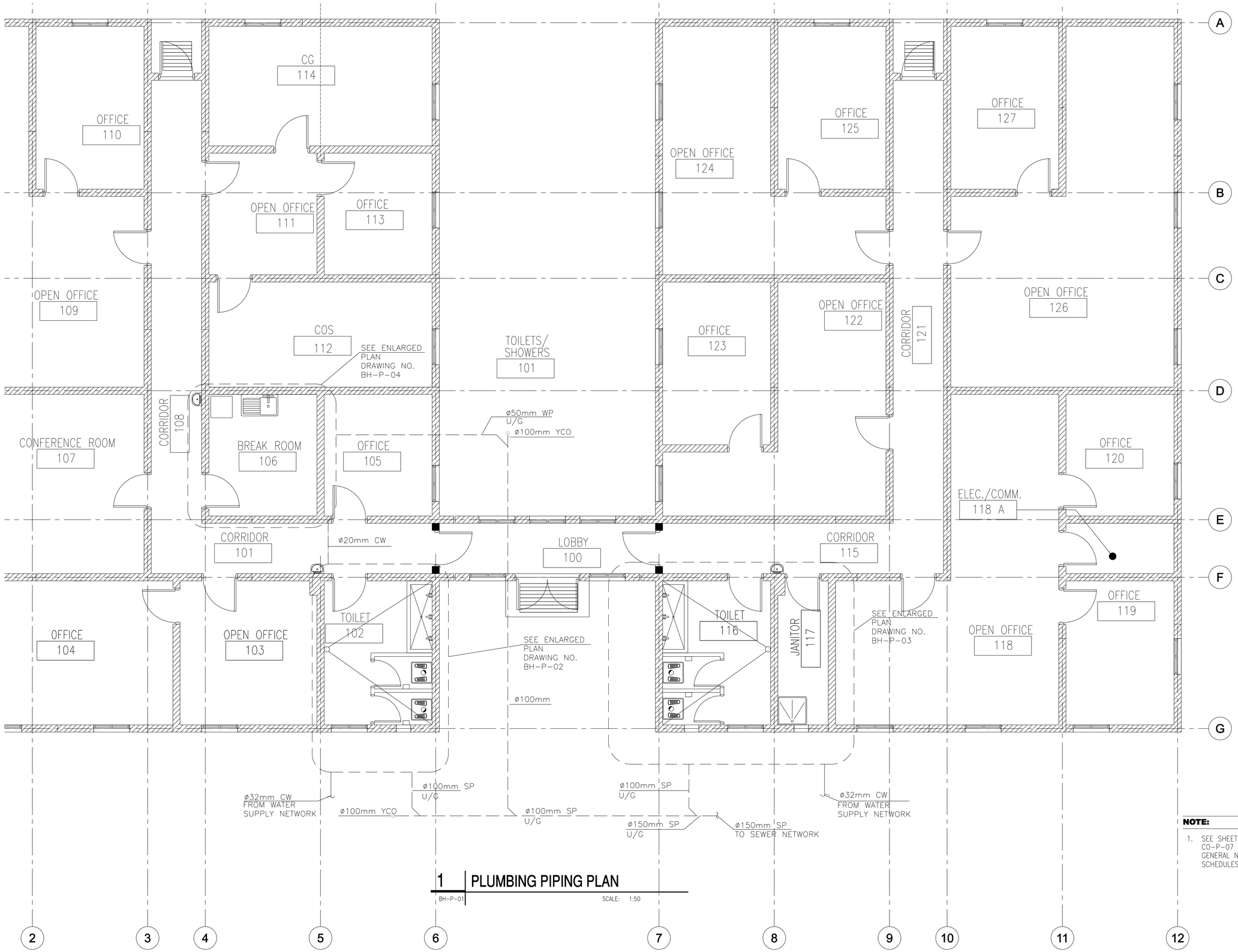

1 PLUMBING PIPING PLAN

BH-P-01

SCALE: 1:50

NOTE:

1. SEE SHEET CO-P-01 & CO-P-02 & CO-P-07 FOR SYMBOLS, ABBREVIATIONS, GENERAL NOTES AND EQUIPMENT SCHEDULES.

1:100

SYMBOL	DESCRIPTION	DATE	APR

DESIGNED BY: XXX
DWN BY: XXX
CHK BY: XXX
DATE: 06-27-07
SUBMITTED BY: R. CREWAL CHIEF, BLDG SYSTEMS
FILE NO.: AF0707PE-BH-P-01

US Army Corps of Engineers Transatlantic Programs Center

ANA REGIONAL BRIGADE
PAKTIKA, AFGHANISTAN

BRIGADE HQ BUILDING
PLUMBING PIPING PLAN

SHEET REFERENCE NUMBER:
PE
BH-P-01

$(getvar, "dwgprefix")$(getvar, "dwgname")$(edtime, 0, MON DD",", YYYY - HHMMam/pm)

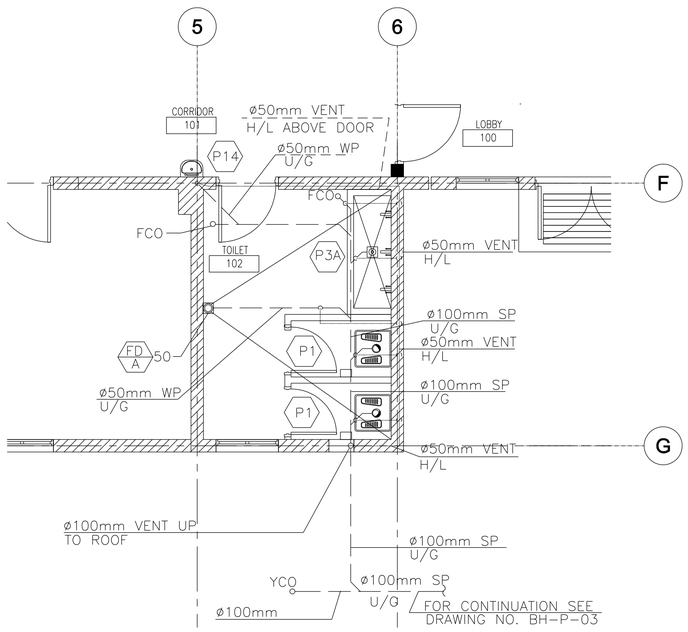

1 DARINAGE PIPING PLAN

BH-P-02 SCALE: 1:50

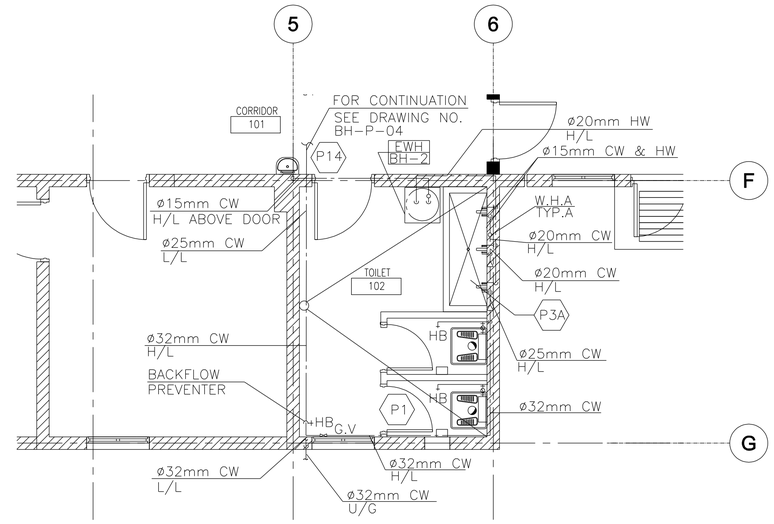

2 COLD & HOT WATER PIPING PLAN

BH-P-02 SCALE: 1:50

NOTE:

1. SEE SHEET CO-P-01 & CO-P-02 & CO-P-07 FOR SYMBOLS, ABBREVIATIONS, GENERAL NOTES AND EQUIPMENT SCHEDULES.

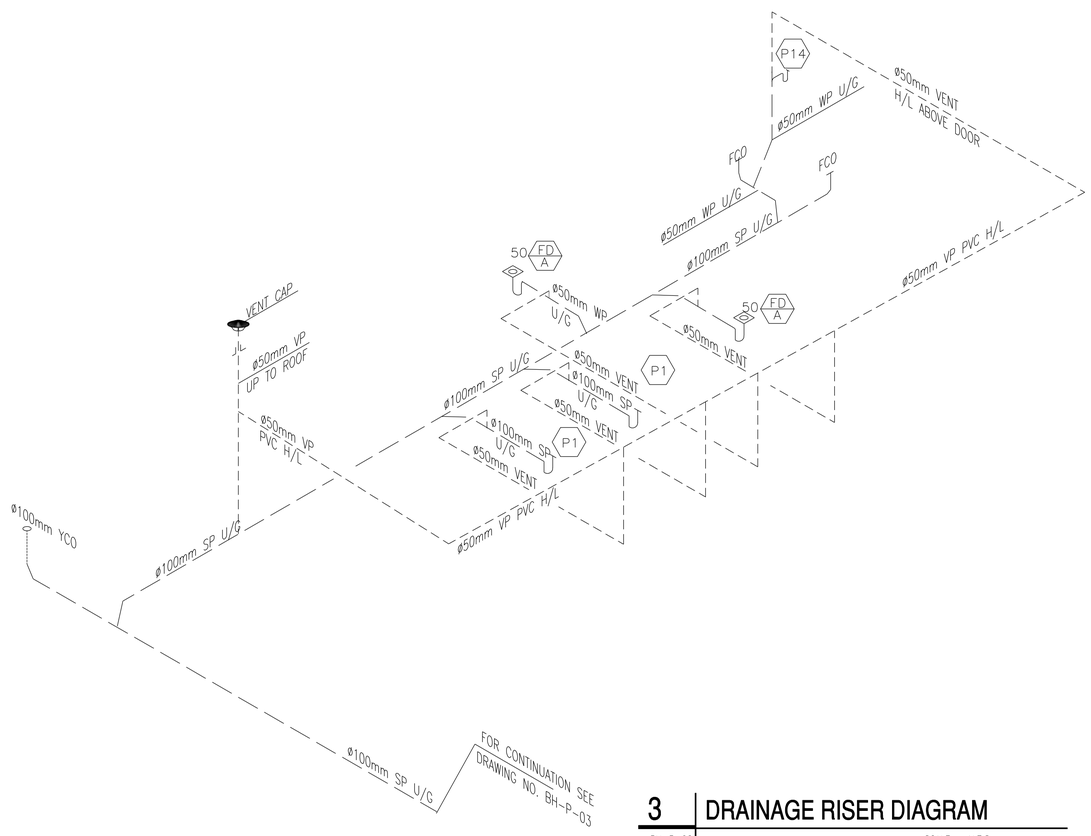

3 DRAINAGE RISER DIAGRAM

BH-P-02 SCALE: N.T.S

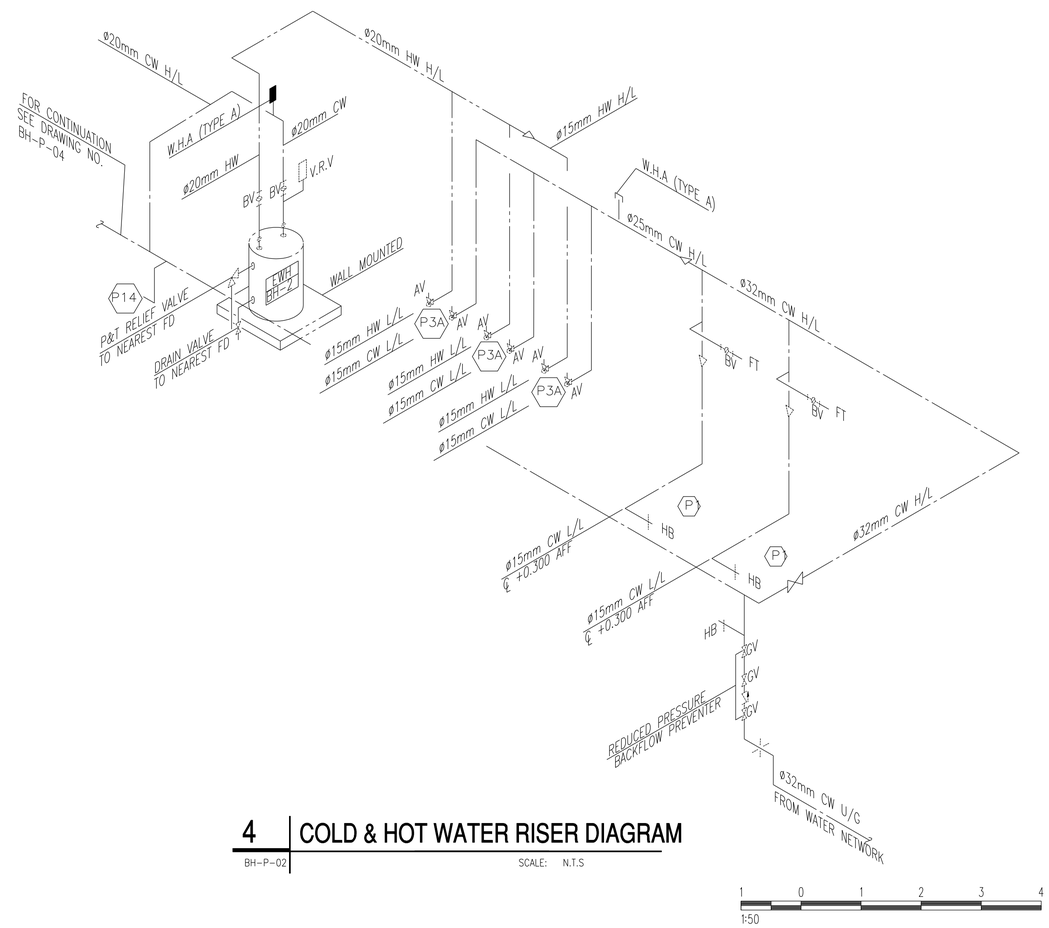

4 COLD & HOT WATER RISER DIAGRAM

BH-P-02 SCALE: N.T.S

SYMBOL	DESCRIPTION	DATE	APR

DESIGNED BY: XXX
DATE: 06-27-07
DWN BY: XXX
SUBMITTED BY: R. GREWAL CHIEF, BLDG SYSTEMS
CHK BY: XXX
FILE NO.: AF0707PE-BH-P-02

US Army Corps of Engineers Transatlantic Programs Center

ANA REGIONAL BRIGADE
PAKTIKA, AFGHANISTAN

BRIGADE HQ BUILDING
TOILET ENLARGED PLAN PLUMBING
PIPING PLAN AND RISER DIAGRAMS

SHEET REFERENCE NUMBER:
PE
BH-P-02

$(getvar, "dwgprefix")$(getvar, "dwgname")$(edtime, 0, MON DD"", YYYY - HHMMam/pm)

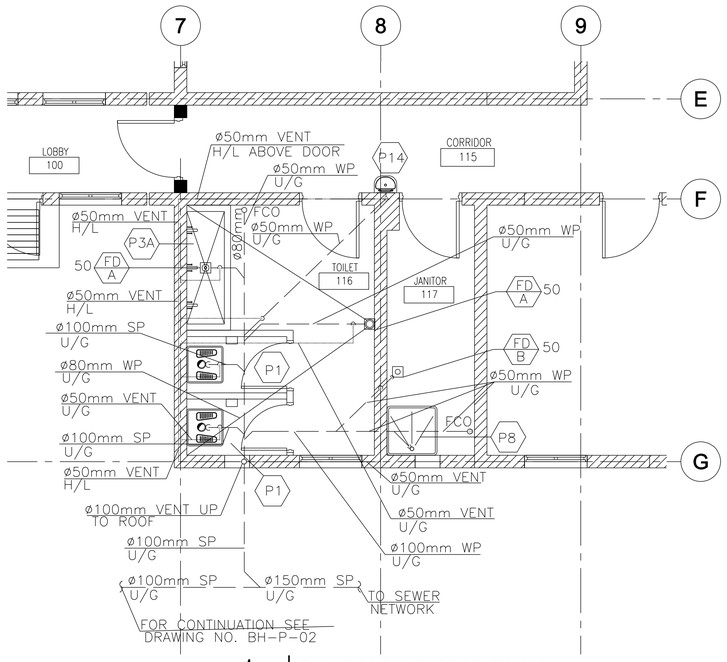

1 DRAINAGE PIPING PLAN

BH-P-03 SCALE: 1:50

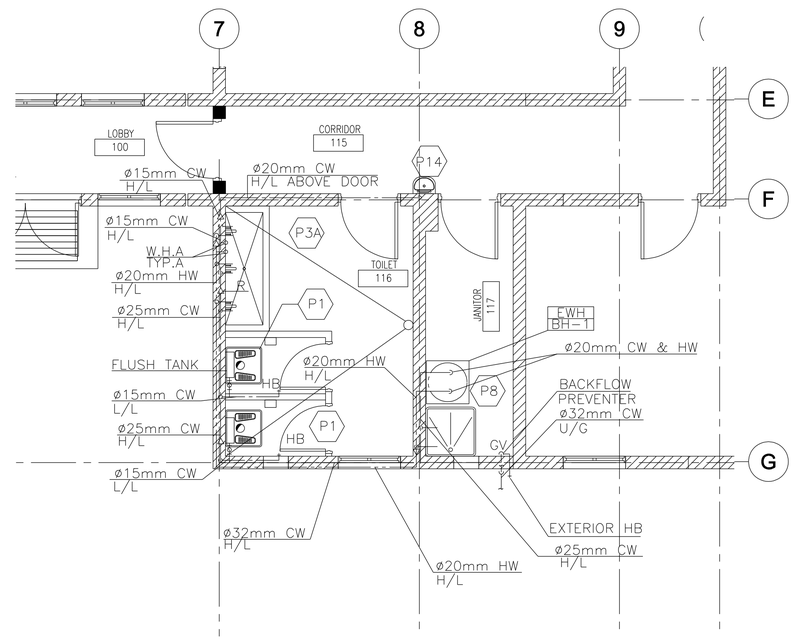

2 COLD & HOT WATER PIPING PLAN

BH-P-03 SCALE: 1:50

NOTE:

1. SEE SHEET CO-P-01 & CO-P-02 & CO-P-07 FOR SYMBOLS, ABBREVIATIONS, GENERAL NOTES AND EQUIPMENT SCHEDULES.

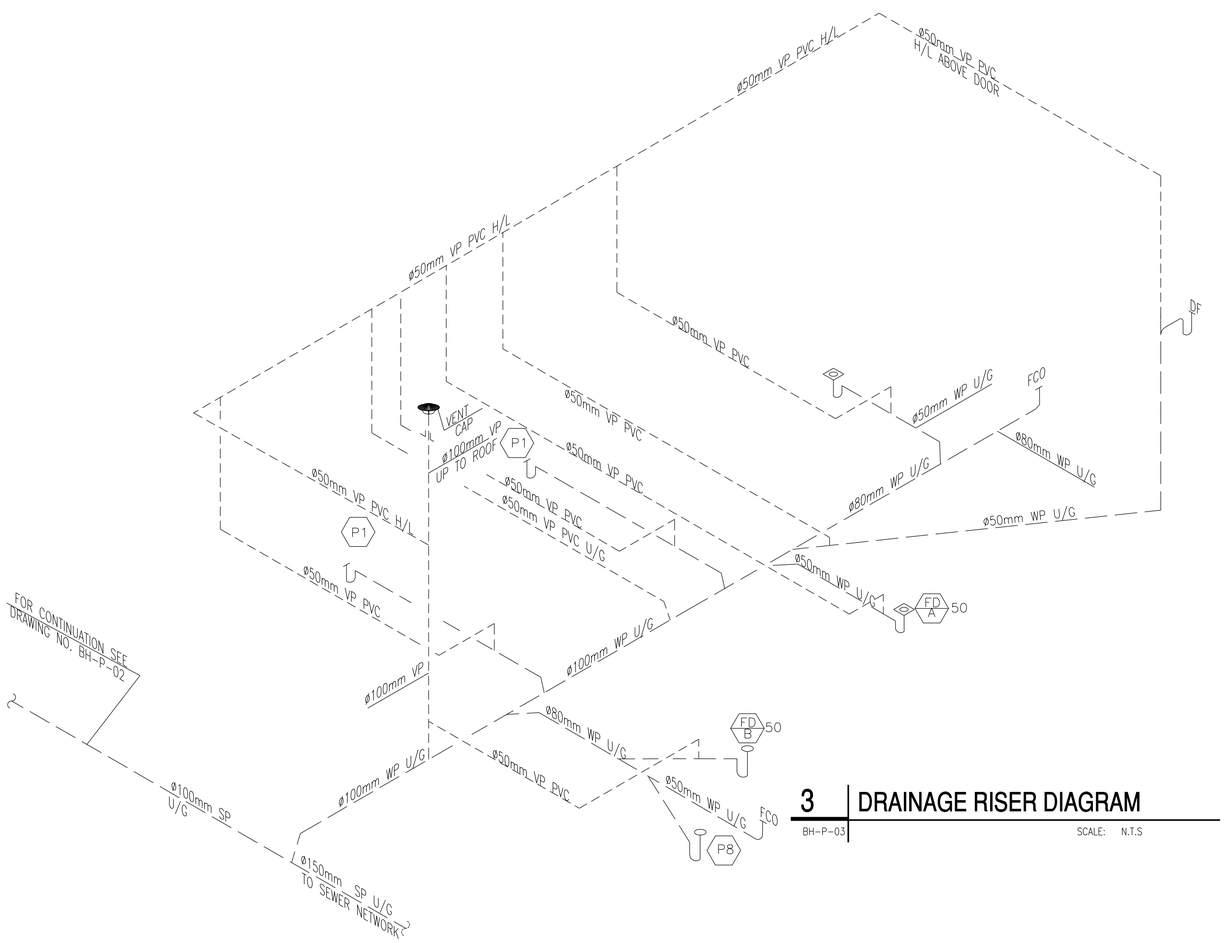

3 DRAINAGE RISER DIAGRAM

BH-P-03 SCALE: N.T.S

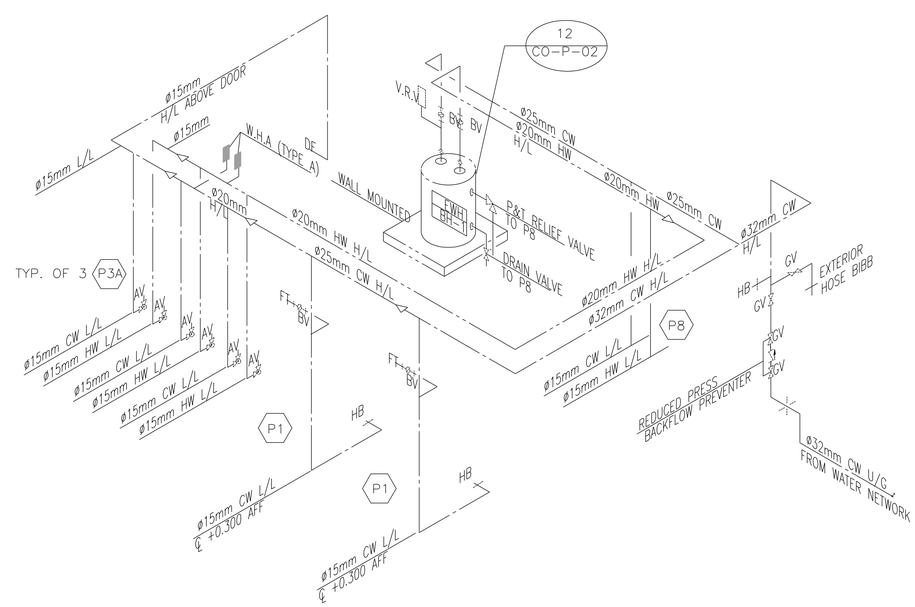

4 COLD & HOT WATER RISER DIAGRAM

BH-P-03 SCALE: N.T.S

1 0 1 2 3 4
1:50

SYMBOL	DESCRIPTION	DATE	APR

DESIGNED BY: XXX
DATE: 06-27-07
DWN. BY: XXX
SUBMITTED BY: R. CRESWELL CHIEF, PT BLDG SYSTEMS
CHK. BY: XXX
FILE NO.: AF0707PE-BH-P-03

US Army Corps of Engineers Transatlantic Programs Center

ANA REGIONAL BRIGADE
PAKTIKA, AFGHANISTAN

BRIGADE HQ BUILDING
TOILET ENLARGED PLAN
PLUMBING PIPING PLAN & RISER DIAGRAMS

SHEET REFERENCE NUMBER:
PE
BH-P-03

$(getvar, "dwgprefix")$(getvar, "dwgname")$(edtime, 0, MON DD", " YYYY - HHMMam/pm)

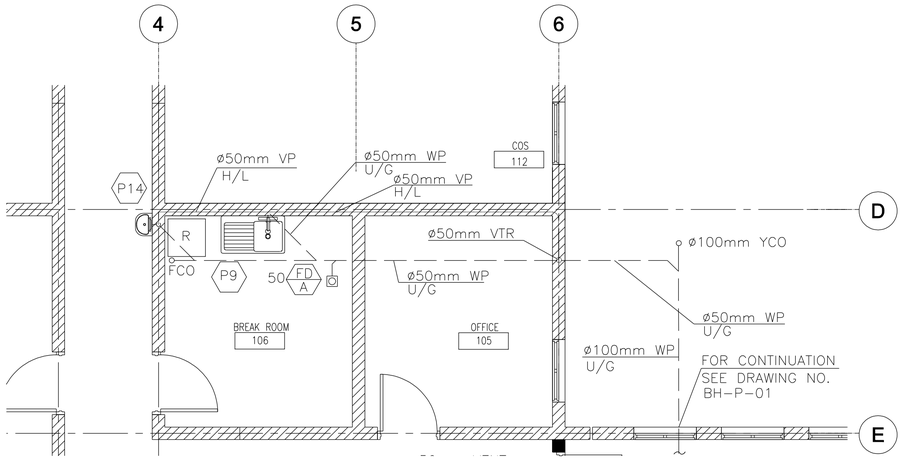

1 DRAINAGE PIPING PLAN

BH-P-04 SCALE: 1:50

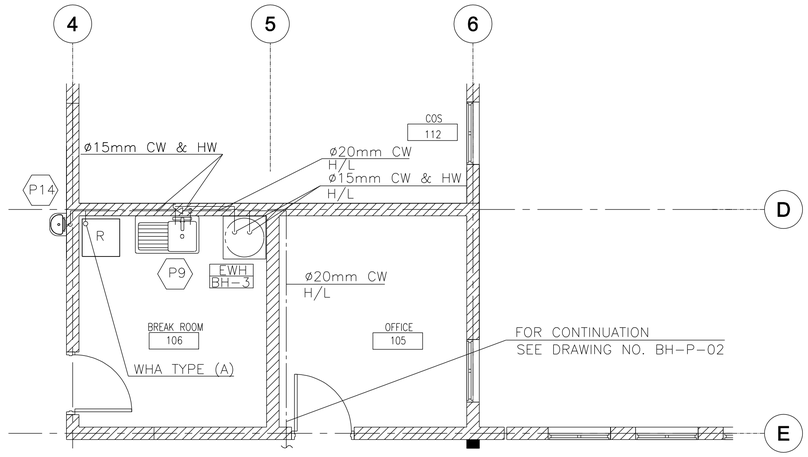

2 COLD & HOT WATER PIPING PLAN

BH-P-04 SCALE: 1:50

NOTE:

1. SEE SHEET CO-P-01 & CO-P-02 & CO-P-07 FOR SYMBOLS, ABBREVIATIONS, GENERAL NOTES AND EQUIPMENT SCHEDULES.

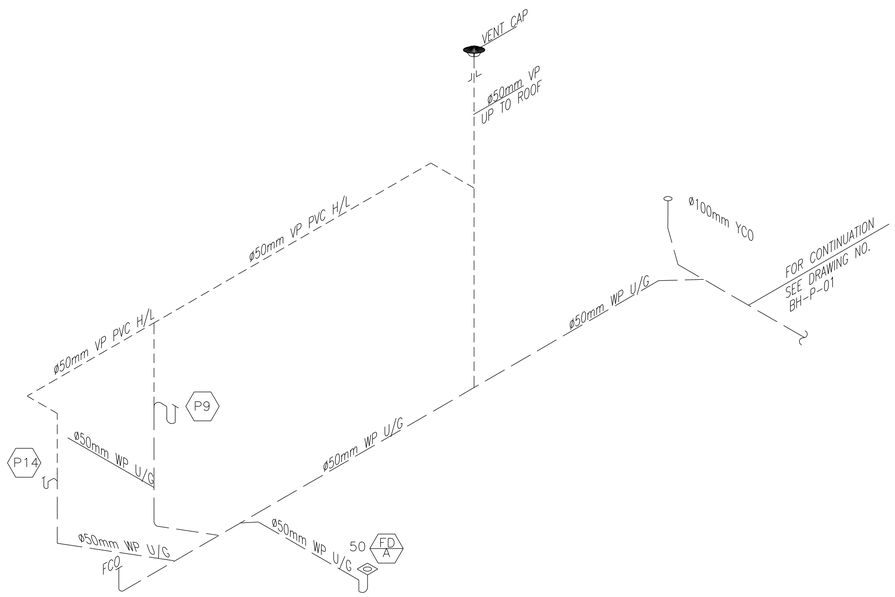

3 DRAINAGE RISER DIAGRAM

BH-P-04 SCALE: N.T.S

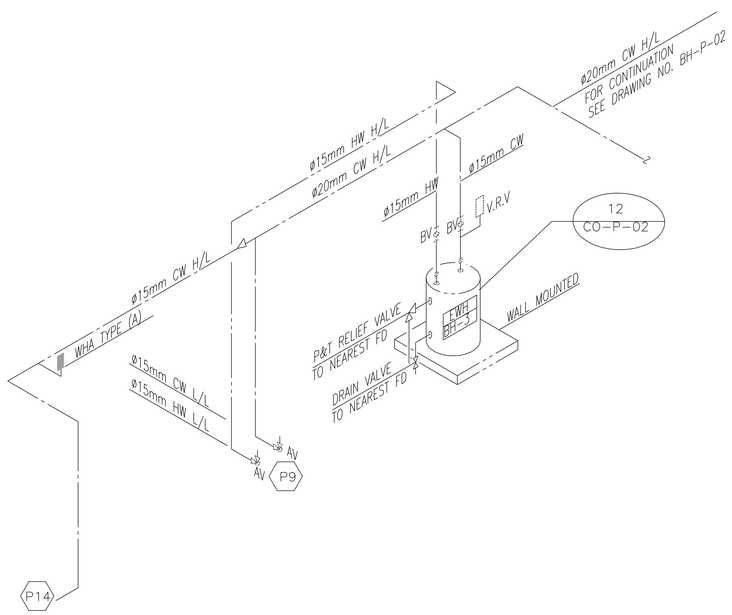

4 COLD & HOT WATER RISER DIAGRAM

BH-P-04 SCALE: N.T.S

1 0 1 2 3 4
1:50

SYMBOL	DESCRIPTION	DATE	APR

DESIGNED BY: XXX
DATE: 06-27-07
DWN BY: XXX
SUBMITTED BY: R. CREWAL CHIEF, PDT BLDG SYSTEMS
CHK BY: XXX
FILE NO.: AF0707PE-BH-P-01

US Army Corps of Engineers Transatlantic Programs Center

ANA REGIONAL BRIGADE
PAKTIKA, AFGHANISTAN

BRIGADE HQ BUILDING

BREAK ROOM ENLARGED PLAN PLUMBING PIPING PLAN AND RISER DIAGRAMS

SHEET REFERENCE NUMBER:
PE
BH-P-04

$(getvar, "dwgprefix")$(getvar, "dwgname")$(edtime, O, MON DD"", YYYY - HHMMam/pm)

BRIGADE HQ PANEL PP

AIC: 25KA

200AT/200AF MCB
MLO

VOLTAGE 380/220V, 3PH, 5W, 50HZ

FEED TOP
MOUNTING SURFACE
LOCATION ROOM # 118A

DESCRIPTION	LOAD (VA) A	B	C	AMP	POLE	CKT	A B C	CKT	POLE	AMP	LOAD (VA) A	B	C	DESCRIPTION
SPARE				20	1	1		2	1	20	3000			EWH-BH-02
SPARE				20	1	3		4	1	20				SPARE
EWH-BH-03			3000	20	1	5		6	1	20				SPARE
PANEL LP1	8140			100	3	7		8	3	20	2000			EWH-BH-01
		7880				9		10				2000		
			7940			11		12					2000	
SPARE				20	1	13		14	3	100	2070			PANEL PP1
SPARE				20	1	15		16				2120		
SPARE				20	1	17		18					1950	
TTC RECP	180			20	1	19		20	3	20				SPARE
TTC RECP		180		20	1	21		22						
SPARE				20	1	23		24						
SPACE					1	25		26	1					SPACE
SPACE					1	27		28	1					SPACE
SPACE					1	29		30	1					SPACE
SUB-TOTALS=	8320	8060	10940								7070	4120	3950	= SUB-TOTALS

	V A	AMPS
TOTAL PHASE A=	15390	69.95
TOTAL PHASE B=	12180	55.36
TOTAL PHASE C=	14890	67.60
TOTAL CONNECTED LOAD	42.46	KVA
DEMAND FACTOR	0.86	
DEMAND LOAD	36.51	KVA
20% FUTURE LOAD	7.30	KVA
TOTAL LOAD	43.80	KVA
TOTAL AMPERE	66.64	AMP

BRIGADE HQ PANEL PP1

AIC: 25KA

100A MCB
MLO

VOLTAGE 380/220V, 3PH, 5W, 50HZ

FEED BOTTOM
MOUNTING FLUSH
LOCATION ROOM # 118A

DESCRIPTION	LOAD (VA) A	B	C	AMP	POLE	CKT	A B C	CKT	POLE	AMP	LOAD (VA) A	B	C	DESCRIPTION
SPARE				20	1	1		2	1	20	400			RM 106,105,112 FANS
RM 111,113,114 FANS		400		20	1	3		4	1	20		300		RM 118 FANS
RM 119,118A,120 FANS			300	20	1	5		6	1	20				SPARE
SPARE				20	1	7		8	1	20	300			RM 124,125 FANS
SPARE		1875		20	1	9		10						DIESEL HEATING
RM 109,110 FANS			400	20	1	11		12						
RM 102 UH-1	1000			20	1	13		14						
SPARE				20	1	15		16	1	20		500		RM 103,104,107 FANS
SPARE				20	1	17		18						DIESEL HEATING
SPARE				20	1	19		20						
RM 122,123 FANS		400		20	1	21		22						
SPARE						23		24	1	20				SPARE
SPARE						25		26	1	20	250			EF-BH-03
SPARE						27		28	1	20				SPARE
SPARE						29		30	1	20			1000	RM 116 UH-1
SPARE						31		32	1	20				SPARE
SPARE						33		34	1	20		400		RM 126,127 FANS
SPARE						35		36	1	20			250	EF-BH-02
SPARE						37		38	1	20	120			EF-BH-01
SPARE						39		40	1	20		120		EF-BH-04
SPARE						41		42	1	20				SPARE
SUB-TOTALS=	1000	800	700								1070	1320	1250	= SUB-TOTALS

	V A	AMPS
TOTAL PHASE A=	2070	9.41
TOTAL PHASE B=	2120	9.63
TOTAL PHASE C=	1950	8.86
TOTAL CONNECTED LOAD	6.14	KVA
DEMAND FACTOR	0.8	
DEMAND LOAD	4.91	KVA
20% FUTURE LOAD	0.98	KVA
TOTAL LOAD	5.89	KVA
TOTAL AMPERE	8.96	AMP

DESIGNBUILD

1.SEE MECHANICAL DRAWINGS FOR DESIGN BUILD REQUIREMENTS USING DIESEL HEATING AND EVAPORATIVE COOLING IN THIS FACILTY.

2.COORDINATE WITH MECHANICAL DESIGNER AND REVISE ELECTRICAL DESIGN, POWER DISTRIBUTION AND PANEL SCHEDULES TO MEET NEW REQUIREMENTS.

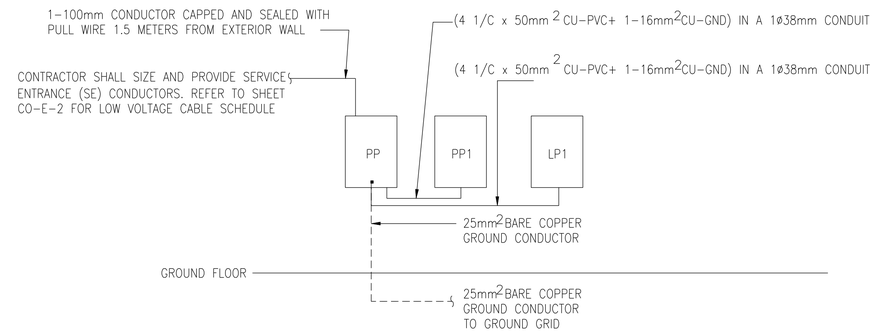

1 POWER RISER DIAGRAM

BH-E-01 SCALE: N.T.S.

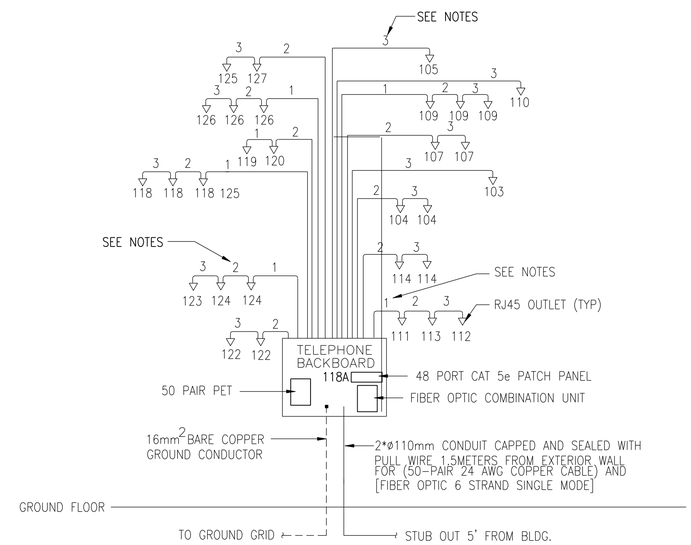

NOTES:
1. SIX (6), CAT 5e UTP CABLES (3 VOICE, 3 DATA) IN 32mm CONDUIT.
2. FOUR (4) CAT 5e UTP CABLES (2 VOICE, 2 DATA) IN 25mm CONDUIT.
3. TWO (2) CAT 5e UTP CABLES (1 VOICE, 1 DATA) IN 25mm CONDUIT.

2 TELEPHONE/ DATA RISER DIAGRAM

BH-E-01 SCALE: N.T.S.

NOTES:

1. SEE SHEET CO-E-01 FOR SYMBOLS, ABBREVIATIONS AND GENERAL NOTES.
2. SEE SHEET CO-E-02 FOR CABLE SCHEDULE.

DRAWING NOT TO SCALE

SYMBOL	DESCRIPTION	DATE	APR

DESIGNED BY: XXX
DATE: 06-27-07
DWN BY: XXX
SUBMITTED BY: R. GREWAL CHIEF, PDT BLDG SYSTEMS
CHK BY: XXX
FILE NO.: AF0707PE-BH-E-01

US Army Corps of Engineers Transatlantic Programs Center

ANA REGIONAL BRIGADE
PAKTIKA, AFGHANISTAN

BRIGADE HQ BUILDING
PANEL SCHEDULES AND RISER DIAGRAMS

SHEET REFERENCE NUMBER:
PE
BH-E-01

$(getvar, "dwgprefix")$(getvar, "dwgname")$(edtime, 0, MON DD",". YYYY - HHMMam/pm)

BRIGADE HQ PANEL LP1

AIC: 25KA

VOLTAGE 380/220V, 3PH, 5W, 50HZ

100A MCB MLO

FEED BOTTOM

MOUNTING LOCATION FLUSH ROOM # 118A

DESCRIPTION	LOAD (VA) A	LOAD (VA) B	LOAD (VA) C	AMP	POLE	CKT	A B C	CKT	POLE	AMP	LOAD (VA) A	LOAD (VA) B	LOAD (VA) C	DESCRIPTION
RM 102,103,104 RECP	800			20	1	1		2	1	20	800			RM 100,101,108,115,121 RECP
RM 105,106,112 RECP		1200		20	1	3		4	1	20		1200		RM 111,113,114 RECP
RM 116,117,118,119 RECP			1400	20	1	5		6	1	20			1400	RM 120,126,127, RECP
RM 102,103,105,106,112,111,113,114 LTG	2120			20	1	7		8	1	20	2320			RM 104,107,109,110 LTG
RM 108,101,100,121,115 LTG		1440		20	1	9		10	1	20		2240		RM 118,119,120,126,127 LTG
RM 116,117,123,122,124,125, LTG			1640	20	1	11		12	1	20			1200	RM 109,110, RECP
FOR FUTURE SELF SMOKE DETECTOR	1100			20	1	13		14	1	20	1000			RM 122,123 RECP
FOR FUTURE SELF SMOKE DETECTOR		1000		20	1	15		16	1	20		800		RM 124,125 RECP
FOR FUTURE SELF SMOKE DETECTOR			600	20	1	17		18	1	20			1000	RM 104,107 RECP
SPARE				20	1	19		20	1	20				SPARE
SPARE				20	1	21		22	1	20				SPARE
FOR FUTURE SELF SMOKE DETECTOR			700	20	1	23		24	1	20				SPARE
SPACE					1	25		26	1					SPACE
SPACE					1	27		28	1					SPACE
SPACE					1	29		30	1					SPACE
SUB-TOTALS=	4020	3640	4340								4120	4240	3600	= SUB-TOTALS

	V A	AMPS
TOTAL PHASE A=	8140	37.0
TOTAL PHASE B=	7880	35.8
TOTAL PHASE C=	7940	36.1
TOTAL CONNECTED LOAD	24	KVA
DEMAND FACTOR	1.0	
DEMAND LOAD	24	KVA
20% FUTURE LOAD	4.8	KVA
TOTAL LOAD	28.8	KVA
TOTAL AMPERE	43.7	AMP

DESIGNBUILD

1. SEE MECHANICAL DRAWINGS FOR DESIGN BUILD REQUIREMENTS USING DIESEL HEATING AND EVAPORATIVE COOLING IN THIS FACILTY.
2. COORDINATE WITH MECHANICAL DESIGNER AND REVISE ELECTRICAL DESIGN, POWER DISTRIBUTION AND PANEL SCHEDULES TO MEET NEW REQUIREMENTS.

NOTES:

1. SEE SHEET CO-E-01 FOR SYMBOLS, ABBREVIATIONS AND GENERAL NOTES.
2. SEE SHEET CO-E-02 FOR BRANCH CIRCUIT WIRE SCHEDULE.

DRAWING NOT TO SCALE

SYMBOL	DESCRIPTION	DATE	APR

DESIGNED BY: XXX
DWN BY: XXX
CHK BY: XXX
DATE: 06-27-07
SUBMITTED BY: R. CREWAL CHIEF, PDT BLDG SYSTEMS
FILE NO.: AF0707 PE-BH-E-02

US Army Corps of Engineers Transatlantic Programs Center

ANA REGIONAL BRIGADE
PAKTIKA, AFGHANISTAN

BRIGADE HQ BUILDING

PANEL SCHEDULE

SHEET REFERENCE NUMBER:
PE
BH-E-02

$(getvar, "dwgprefix")$(getvar, "dwgname")$(edtime, 0, MON DD", YYYY - HH:MMam/pm)

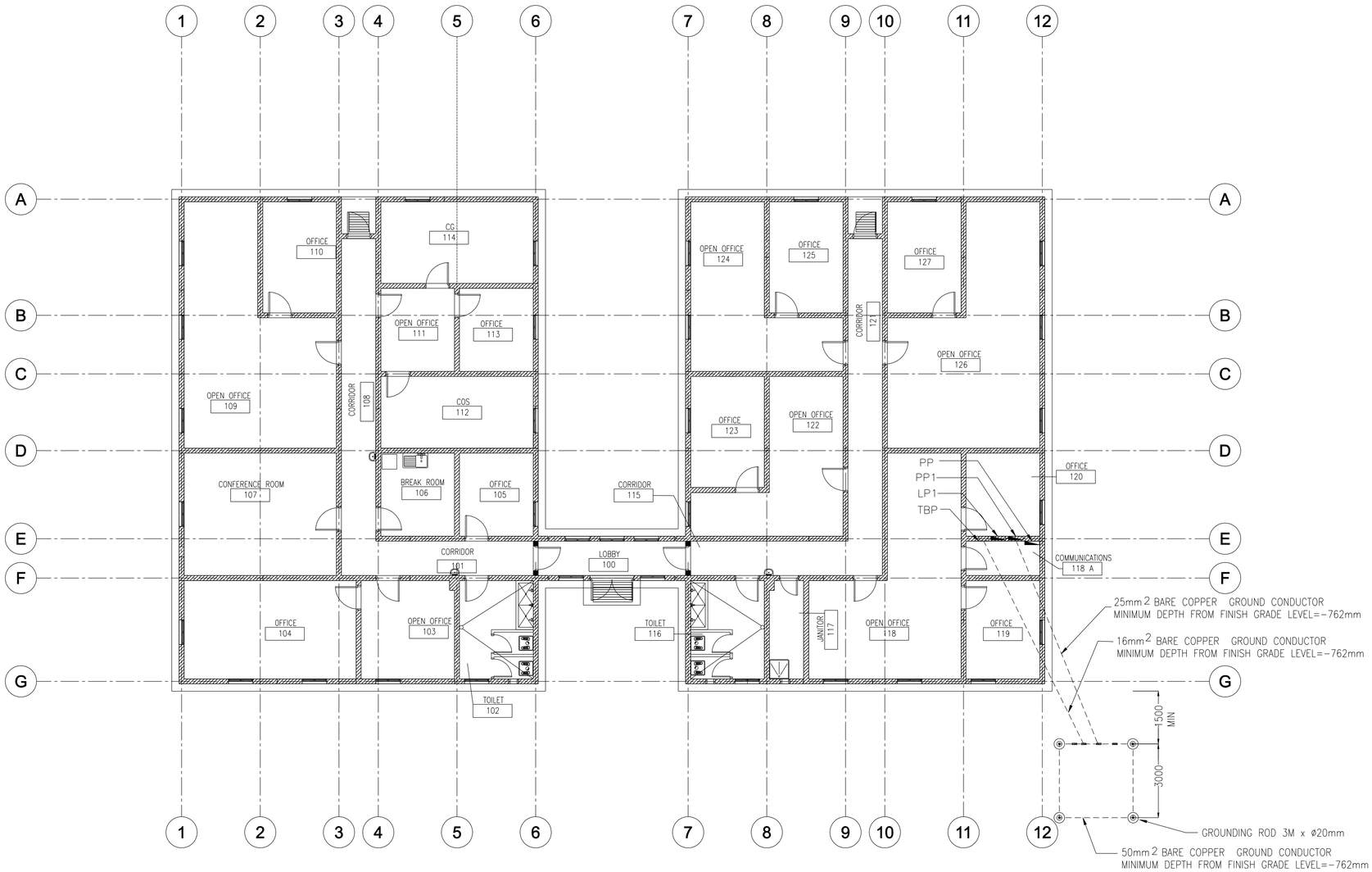

1 GROUNDING PLAN

BH-E-03 SCALE: 1:100

DESIGNBUILD

1.SEE MECHANICAL DRAWINGS FOR DESIGN BUILD REQUIREMENTS USING DIESEL HEATING AND EVAPORATIVE COOLING IN THIS FACILTY.

2. COORDINATE WITH MECHANICAL DESIGNER AND REVISE ELECTRICAL DESIGN, POWER DISTRIBUTION AND PANEL SCHEDULES TO MEET NEW REQUIREMENTS.

NOTES:

1. SEE SHEETS CO-E-01 AND CO-E-02 FOR SYMBOLS,ABBREVIATIONS, GENERAL NOTES AND LIGHTING FIXTURE SCHEDULE.
2. SEE SHEETS CO-E-03 TO CO-E-05 FOR STANDARD DETAILS.
3. SEE SHEET BH-E-01 FOR PANEL SCHEDULES AND RISER DIAGRAMS FOR POWER SYSTEM.

1 0 1 2 3 4 5 6 7 8 9
1:100

DRAWING NOT TO SCALE

SYMBOL	DESCRIPTION	DATE	APR

DESIGNED BY: XXX
DWN BY: XXX
CHK BY: XXX
DATE: 06-27-07
SUBMITTED BY: R. CREWAL CHIEF, PDT BLDG SYSTEMS
FILE NO.: AF0707PE-BH-E-03

US Army Corps of Engineers Transatlantic Programs Center

ANA REGIONAL BRIGADE
PAKTIKA, AFGHANISTAN

BRIGADE HQ BUILDING
GROUNDING PLAN

SHEET REFERENCE NUMBER:
PE
BH-E-03

$(getvar, "dwgprefix")$(getvar, "dwgname")$(edtime, 0, MON DD,"", YYYY - H:MMam/pm)

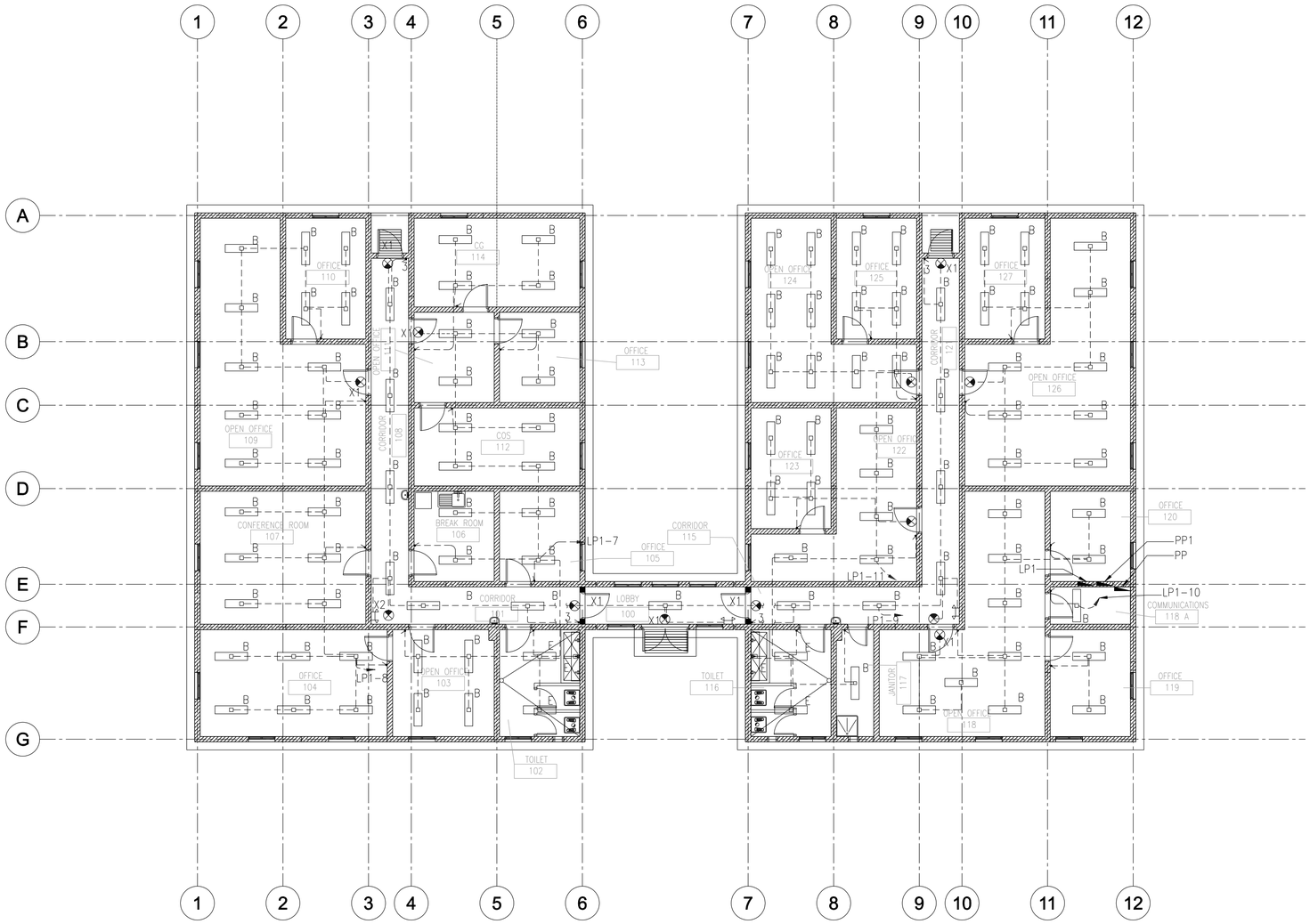

1 LIGHTING PLAN

BH-E-04

SCALE: 1:100

DESIGNBUILD

1.SEE MECHANICAL DRAWINGS FOR DESIGN BUILD REQUIREMENTS USING DIESEL HEATING AND EVAPORATIVE COOLING IN THIS FACILTY.

2. COORDINATE WITH MECHANICAL DESIGNER AND REVISE ELECTRICAL DESIGN, POWER DISTRIBUTION AND PANEL SCHEDULES TO MEET NEW REQUIREMENTS.

NOTES:

1. SEE SHEETS CO-E-01 AND CO-E-02 FOR SYMBOLS, ABBREVIATIONS, GENERAL NOTES AND LIGHTING FIXTURE SCHEDULE.
2. SEE SHEETS CO-E-03 TO CO-E-05 FOR STANDARD DETAILS.
3. SEE SHEET BH-E-02 FOR PANEL SCHEDULES

1 0 1 2 3 4 5 6 7 8 9
1:100

DRAWING NOT TO SCALE

SYMBOL	DESCRIPTION	DATE	APR

DESIGNED BY: XXX
DWN BY: XXX
CHK BY: XXX
DATE: 06-27-07
SUBMITTED BY: R. CREWAL CHIEF, DIST. BLDG SYSTEMS
FILE NO.: AF07070PE-BH-E-04

US Army Corps of Engineers Transatlantic Programs Center

ANA REGIONAL BRIGADE
PAKTIKA, AFGHANISTAN

BRIGADE HQ BUILDING

LIGHTING PLAN

SHEET REFERENCE NUMBER:
PE
BH-E-04

$(getvar, "dwgprefix")$(getvar, "dwgname")$(edtime, 0, MON DD,"", YYYY - H:MMam/pm)

DESIGNBUILD

1.SEE MECHANICAL DRAWINGS FOR DESIGN BUILD REQUIREMENTS USING DIESEL HEATING AND EVAPORATIVE COOLING IN THIS FACILTY.

2. COORDINATE WITH MECHANICAL DESIGNER AND REVISE ELECTRICAL DESIGN, POWER DISTRIBUTION AND PANEL SCHEDULES TO MEET NEW REQUIREMENTS.

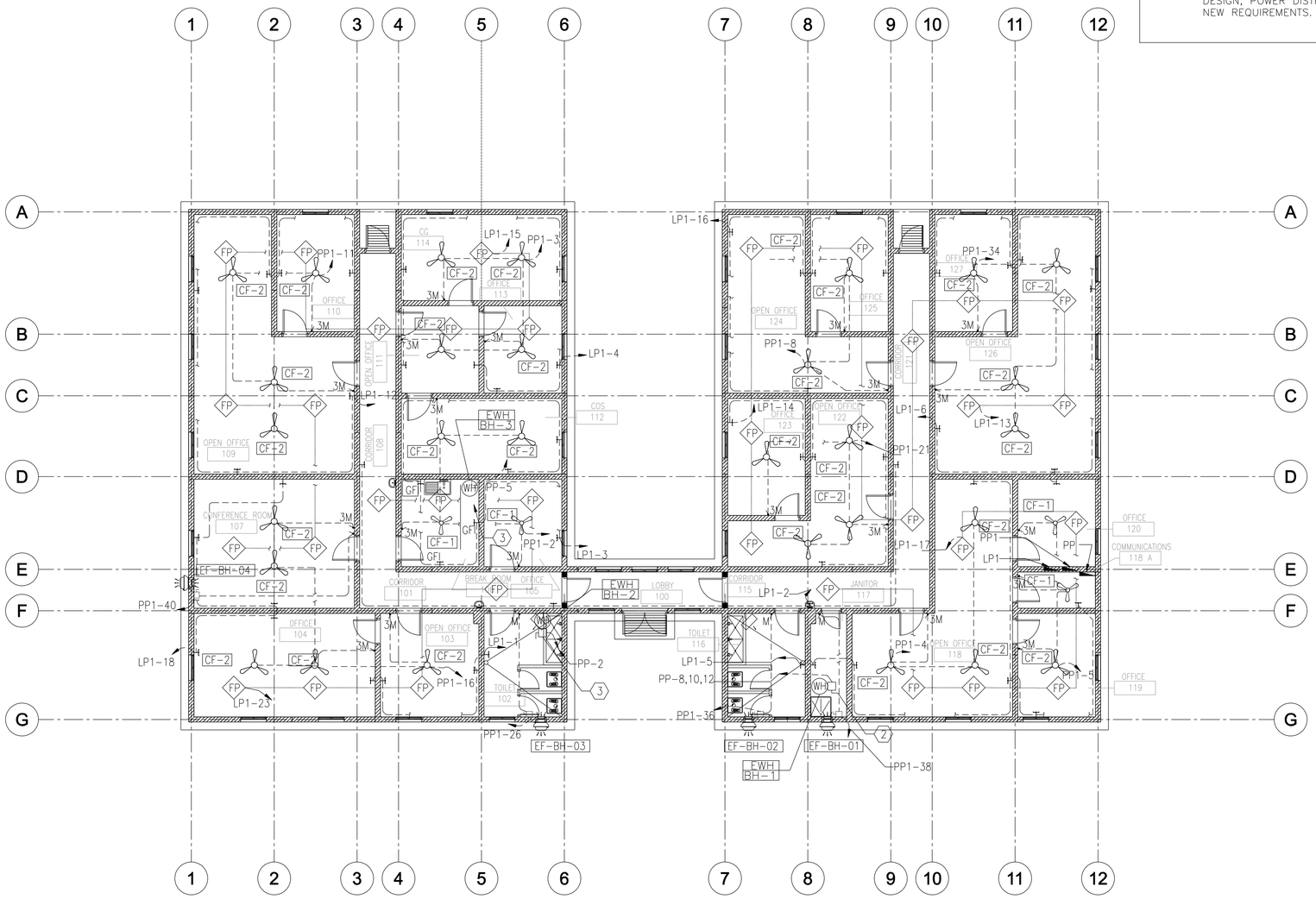

1 POWER PLAN

BH-E-05 SCALE: 1:100

KEY NOTE:

1. NOT USED
2. PROVIDE 30A/3P/380V NON FUSED DISCONNECT SWITCH IN NEMA 1 ENCLOSURE.
3. PROVIDE 20A/2P/240V NON FUSED DISCONNECT SWITCH IN NEMA 1 ENCLOSURE.

NOTES:

1. SEE SHEET CO-E-01 FOR SYMBOLS,ABBREVIATIONS,AND GENERAL NOTES
2. SEE SHEETS CO-E-03 TO CO-E-05 FOR STANDARD DETAILS
3. SEE SHEET BH-E-01 AND BH-E-02 FOR PANEL SCHEDULES AND RISER DIAGRAMS FOR POWER SYSTEM.
4. PROVIDE FIRE ALARM PULL BOXES, CONDUITS AND WIRING FOR FUTURE SELF SMOKE DETECTOR

1 0 1 2 3 4 5 6 7 8 9
1:100

DRAWING NOT TO SCALE

SYMBOL	DESCRIPTION	DATE	APR

DESIGNED BY: XXX
DWN BY: XXX
CHK BY: XXX
DATE: 06-27-07
SUBMITTED BY: R. GREWAL
CHIEF, BLDG SYSTEMS
FILE NO.: AF0707PE-BH-E-05

US Army Corps of Engineers Transatlantic Programs Center

ANA REGIONAL BRIGADE
PAKTIKA, AFGHANISTAN

BRIGADE HQ BUILDING

POWER PLAN

SHEET REFERENCE NUMBER:
PE
BH-E-05

$(getvar, "dwgprefix")$(getvar, "dwgname")$(edtime, O, MON DD", YYYY - H:MMam/pm)

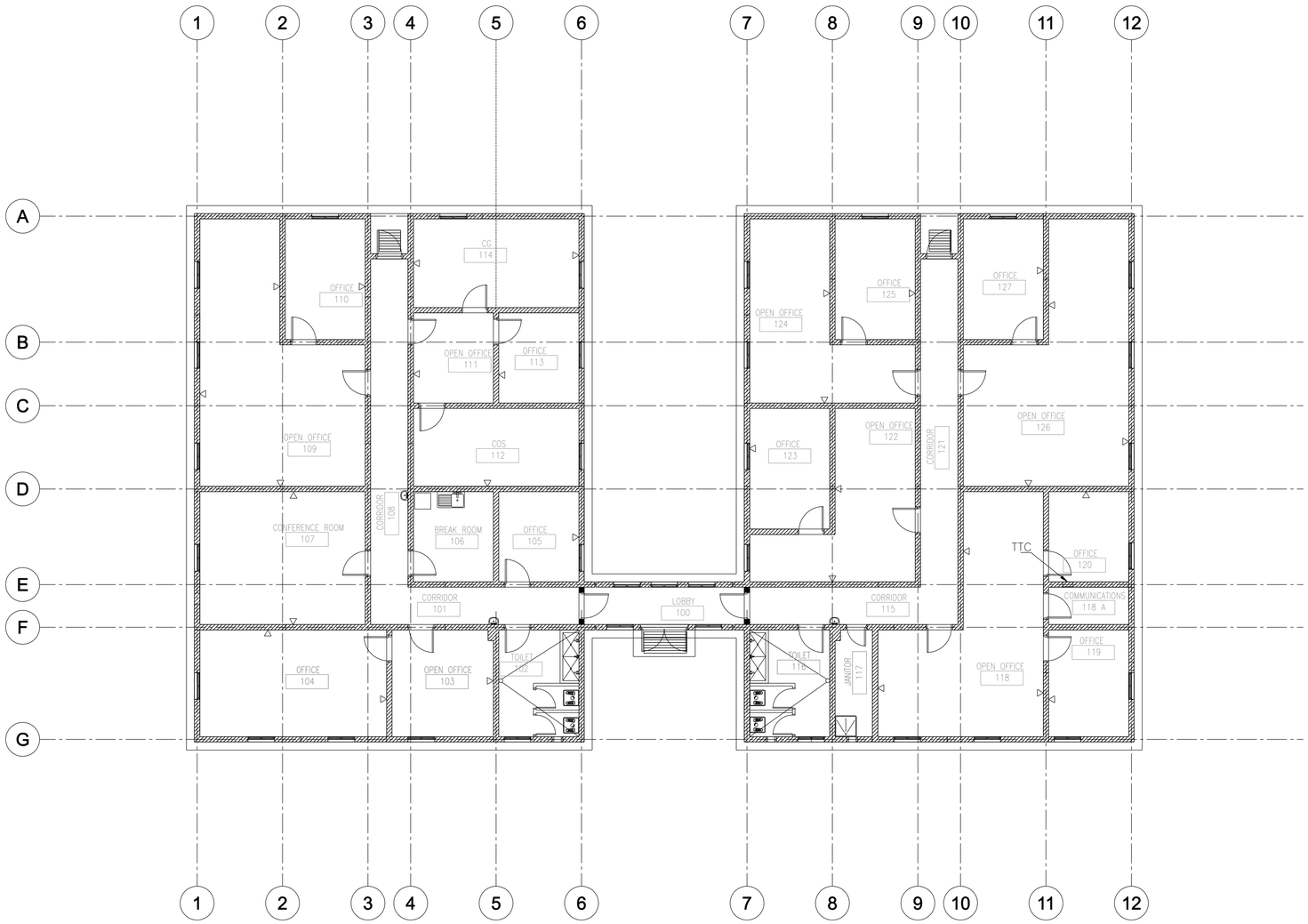

1 COMMUNICATION PLAN

BH-E-06 SCALE: 1:100

NOTES:

1. SEE SHEETS CO-E-01 AND CO-E-02 FOR SYMBOLS, ABBREVIATIONS AND GENERAL NOTES
2. SEE SHEETS CO-E-03 TO CO-E-05 FOR STANDARD DETAILS.
3. SEE SHEET BH-E-01 FOR PANEL SCHEDUILES AND RISER DIAGRAMS FOR POWER AND COMMUNICATION SYSTEM.

1 0 1 2 3 4 5 6 7 8 9
1:100

DRAWING NOT TO SCALE

SYMBOL	DESCRIPTION	DATE	APR

DESIGNED BY: XXX
DWN BY: XXX
CHK BY: XXX
DATE: 06-27-07
SUBMITTED BY: R. CREWAL CHIEF, PDT BLDG SYSTEMS
FILE NO.: AF0707PE-BH-E-06

US Army Corps of Engineers Transatlantic Programs Center

ANA REGIONAL BRIGADE
PAKTIKA, AFGHANISTAN

BRIGADE HQ BUILDING

COMMUNICATION PLAN

SHEET REFERENCE NUMBER:
PE
BH-E-06

$(getvar, "dwgprefix")$(getvar, "dwgname")$(edtime, 0, MON DD,"", YYYY - H:MMam/pm)

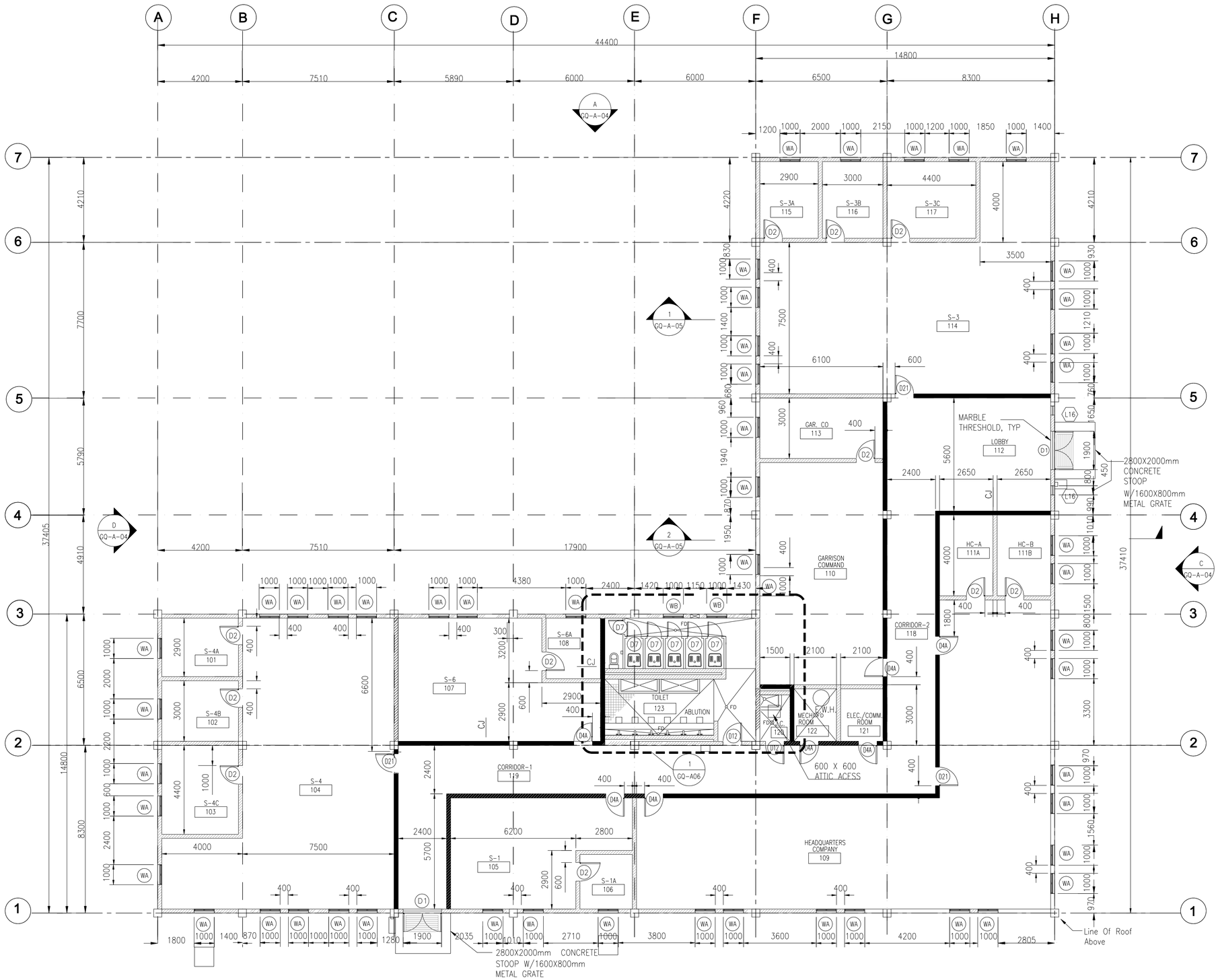

1 FLOOR PLAN

GQ-A-01 SCALE: 1:100

NOTE:

ORIENT BUILDING ON SITE SUCH THAT TOILETS ARE ON A NORTH/SOUTH ACCESS.

1:100

FINISHING SCHEDULE LEGEND

FLOOR

F1	SEALED CONCRETE
F2	300MMX300MM TERRAZZO TILE
F3	CERAMIC TILE

WALL

W1	WHITE PAINTED PLASTER
W1	150MMX150MM GLAZED CERAMIC TILES UP TO 2000MM AFF

CEILING

C1	GYPSUM BOARD – PAINTED
C3	MOISTURE RESISTANT GYPSUM BOARD – PAINTED

FINISHING SCHEDULE

Room No.	Usage	Floor	Wall	Ceiling
101	S-4A	F2	W1	C1
102	S-4B	F2	W1	C1
103	S-4C	F2	W1	C1
104	S-4	F2	W1	C1
105	S-1	F2	W1	C1
106	S-1A	F2	W1	C1
107	S-6	F2	W1	C1
108	S-6A	F2	W1	C1
109	CORRIDOR-1	F2	W1	C1
110	GA. COMMAND	F2	W1	C1
111A	HC-A	F2	W1	C1
111B	HC-B	F2	W1	C1
112	LOBBY	F2	W1	C1
113	GAR. CO.	F2	W1	C1
114	S-3	F2	W1	C1
115	S-3A	F2	W1	C1
116	S-3B	F2	W1	C1
117	S-3C	F2	W1	C1
118	CORRIDOR-2	F2	W1	C1
119	CORRIDOR-1	F2	W1	C1
120	J.C.	F2	W1	C3
121	ELEC./COMM.	F1	W1	C1
122	MECH. ROOM	F1	W1	C1
123	TOILET	F3	W1,W2	C3

WALL SYMBOLS:

- CMU WALL
- CMU LOW HEIGHT WALL +/- 2000 MM WITH CERAMIC TILE FINISH
- 1 HR RATED TO ROOF CMU FIRE SEPERATION WALL
- CJ — CMU CONTROL JOINT

NOTES:

1- ALL WALLS ARE 200MM THK. CMU UNLESS NOTED OTHERWISE.

2- ALL WALLS TERMINATE AT CEILING UNLESS NOTED OTHERWISE. REF. STRUCT. DRWGS.

3- ALL DOOR JAMBS ARE 200MM UNLESS NOTED OTHERWISE.

4- ALL DIMENSIONS ARE TO FACE OF CMU UNLESS NOTED OTHERWISE.

5- ALL VERTICAL DIMENSIONS & LEVELS ARE FROM GROUND FLOOR FINISHED SLAB. THIS ELEVATION IS +0000.

6- SEE DRAWING CO-A-05 & CO-A-06 FOR OPENING SCHEDULES & TYPES.

7- SEE DRAWING CO-A-02, CO-A-03 & CO-A-04 FOR STANDARD DETAILS.

8- SEE STRUCTURAL DRAWINGS FOR LOCATION OF BUILDING CONTROL, EXPANSION AND SEISMIC JOINTS.

9- ALL HVAC OPENINGS DIMENSION SHALL BE VERIFIED WITH APPROVED SUBMITTALS.

10- TOTAL AREA OF BUILDING IS 992 M2.

SYMBOL	DESCRIPTION	DATE	APR

06-27-07

YSK | JSG | PLD

PHILIP J. DINELLO, PE, PMP — CHIEF, PROJECTS DEV

AF0707PF-GQ-A-01

US Army Corps of Engineers Transatlantic Programs Center

ANA REGIONAL BRIGADE
PAKTIKA, AFGHANISTAN

GARRISON HQ BUILDING
FLOOR PLAN

SHEET REFERENCE NUMBER:
PF
GQ-A-01

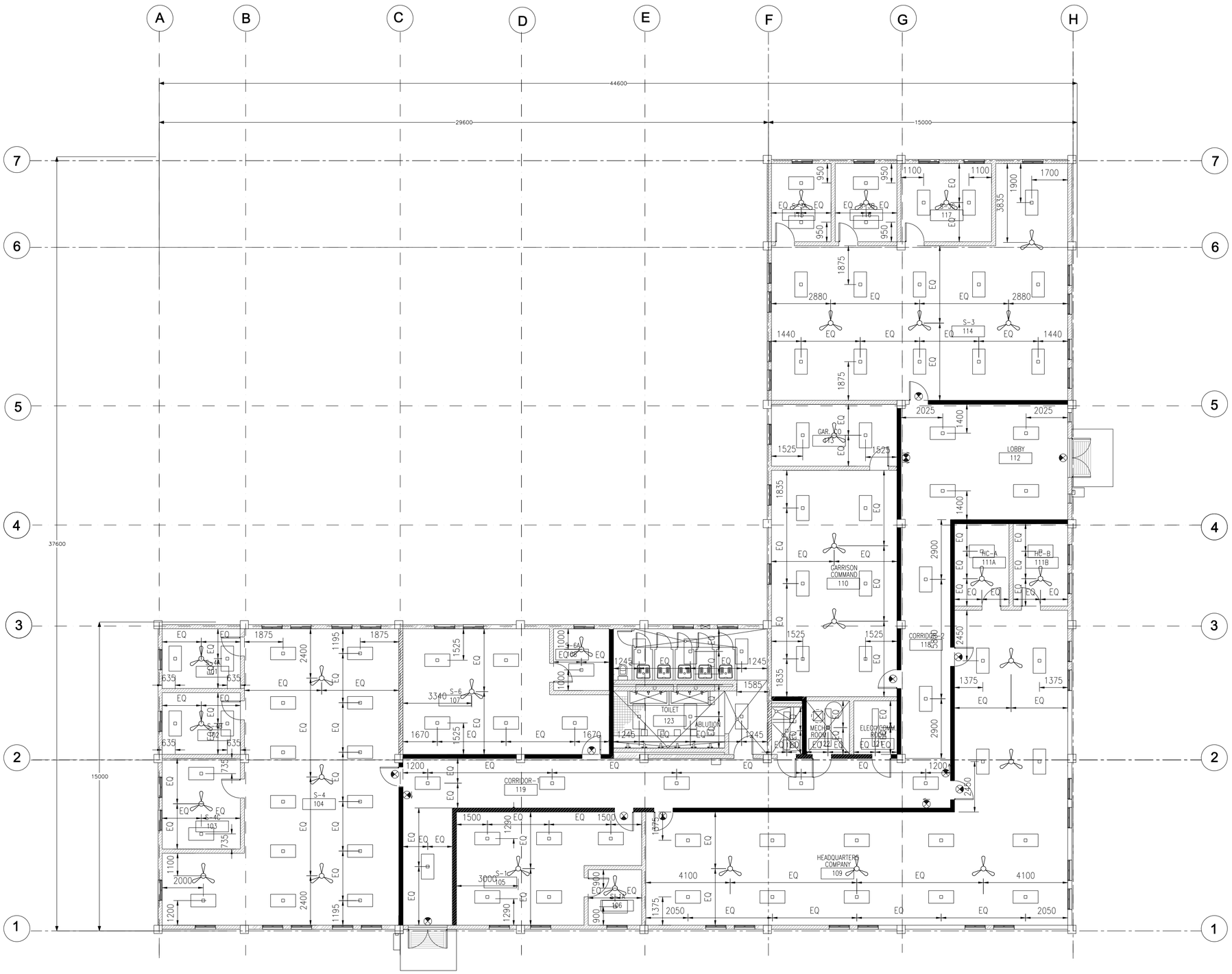

1 REFLECTED CEILING PLAN

GQ-A-02

SCALE: 1:100

NOTES:

1- SEE SHEET CQ-A-01 FOR FINISH SCHEDULE.

2- SEE SHEET CO-E-01 FOR LIGHTING LEGEND.

3- SEE SHEET GQ-E-04 FOR EXIT SIGN LOCATIONS.

1 0 1 2 3 4 5 6 7 8 9

1:100

SYMBOL	DESCRIPTION	DATE	APR

DESIGNED BY: YSK
DWN BY: JSG
CHK BY: PLD
DATE: 06-27-07
SUBMITTED BY: CHIEF, PORT FACILITIES DEV. PANELLIQ
FILE NO.: AF0707PF-GQ-A-02

US Army Corps of Engineers Transatlantic Programs Center

ANA REGIONAL BRIGADE
PAKTIKA, AFGHANISTAN

GARRISON HQ BUILDING
REFLECTED CEILING PLAN

SHEET REFERENCE NUMBER:
PF
GQ-A-02

$(getvar, "dwgprefix")$(getvar, "dwgname")$(edtime, 0, MON DD"", YYYY - H:MMam/pm)

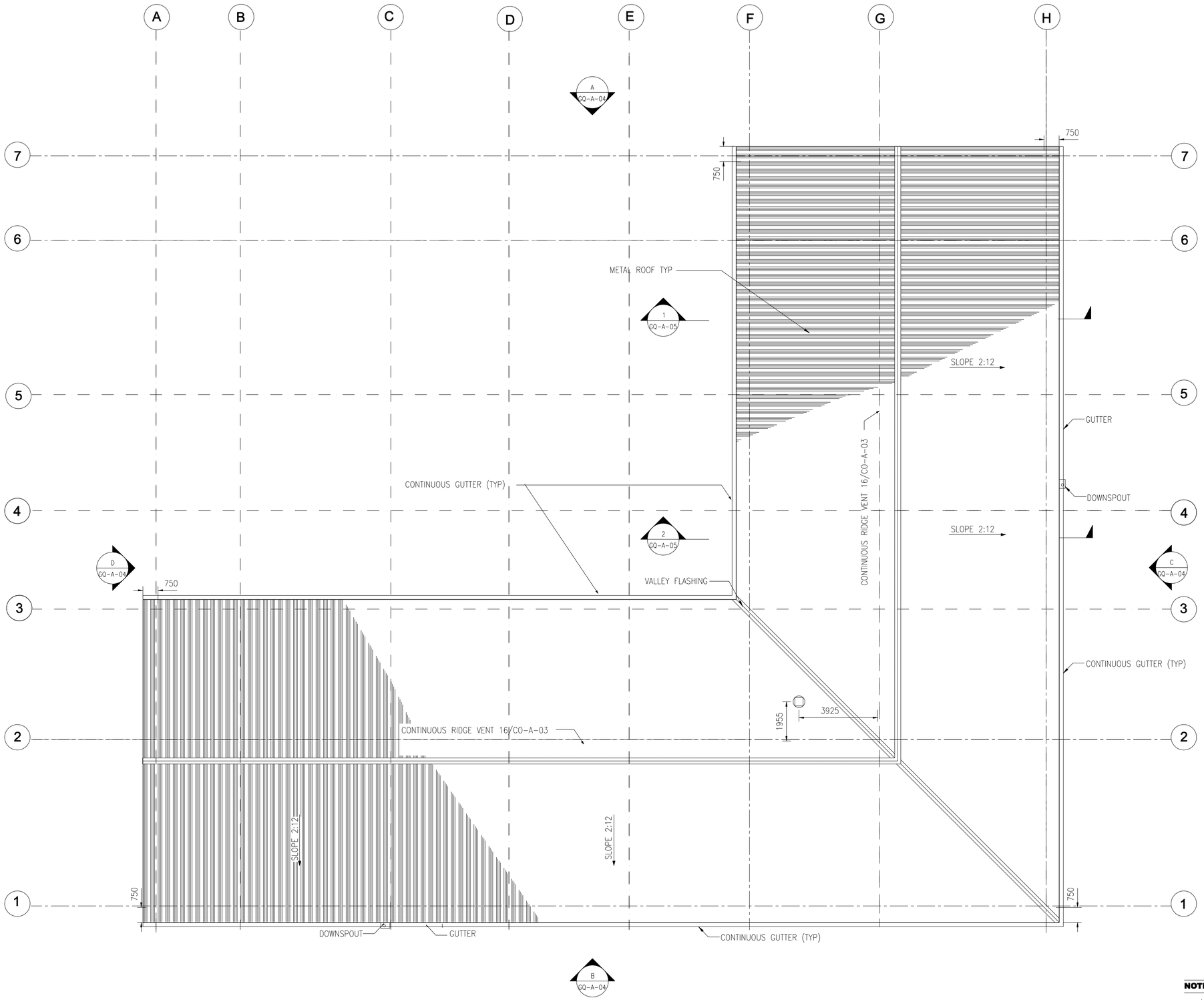

1 ROOF PLAN

GQ-A-03 SCALE: 1:100

NOTE:

- ALL HVAC OPENINGS DIMENSION SHALL BE VERIFIED WITH APPROVED SUBMITTALS.

1 0 1 2 3 4 5 6 7 8 9
1:100

SYMBOL	DESCRIPTION	DATE	APR

DESIGNED BY: YSK
DWN BY: JSG
CHK BY: PLD
DATE: 06-27-07
SUBMITTED BY: PHILIP D. PANELLO PROJECT ENGINEER DEV
FILE NO.: AF0707PF-GQ-A-03

US Army Corps of Engineers Transatlantic Programs Center

ANA REGIONAL BRIGADE
PAKTIKA, AFGHANISTAN

GARRISON HQ BUILDING
ROOF PLAN

SHEET REFERENCE NUMBER:
PF
GQ-A-03

$(getvar, "dwgprefix")$(getvar, "dwgname")$(edtime, 0, MON DD"," YYYY - H:MMam/pm)

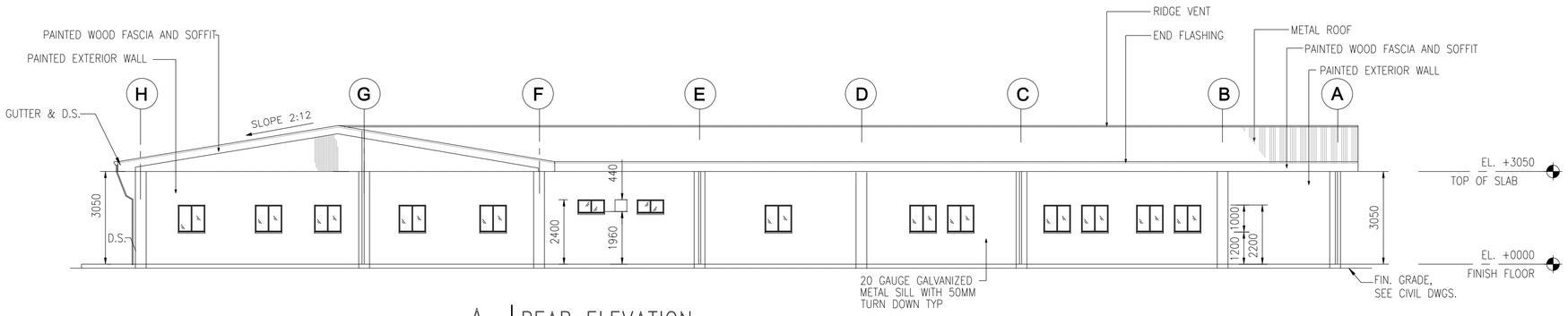

A REAR ELEVATION

GQ-A-04 SCALE: 1:100

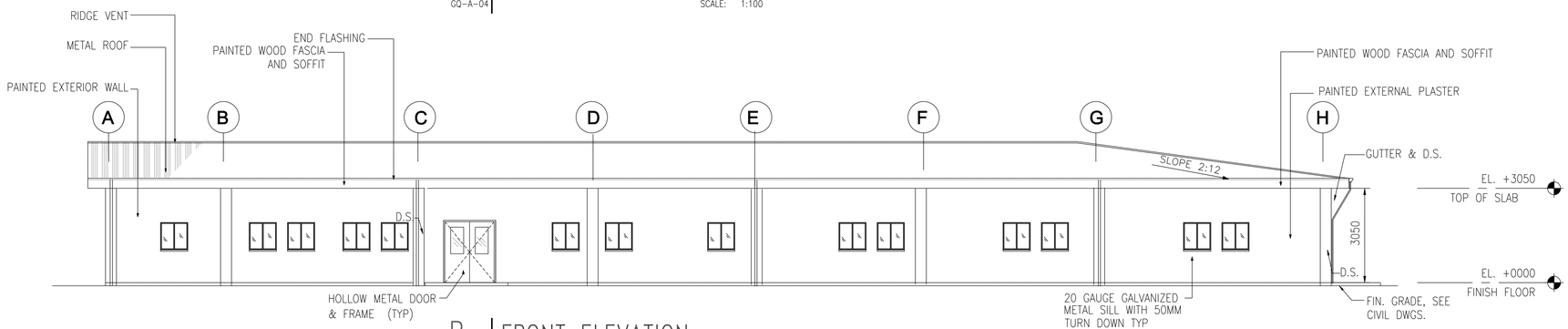

B FRONT ELEVATION

GQ-A-04 SCALE: 1:100

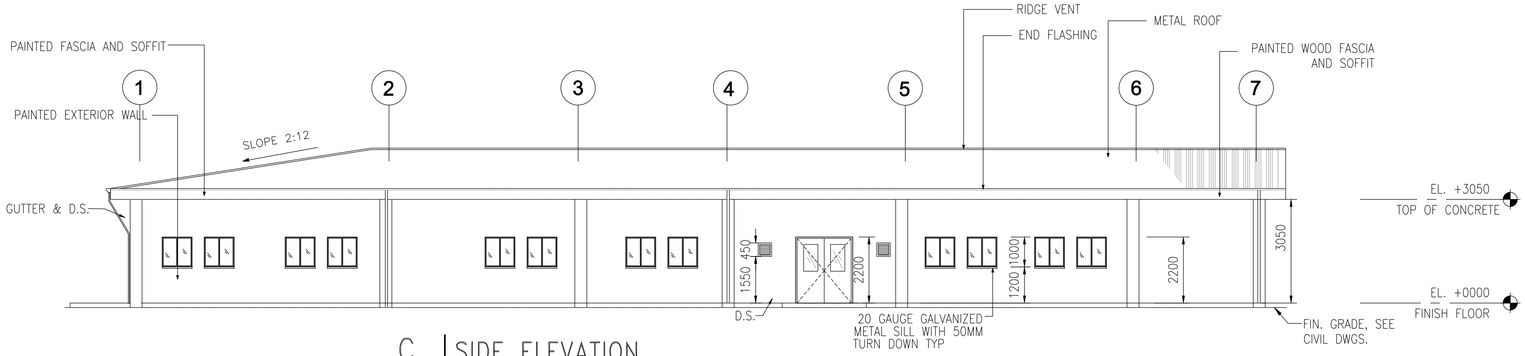

C SIDE ELEVATION

GQ-A-04 SCALE: 1:100

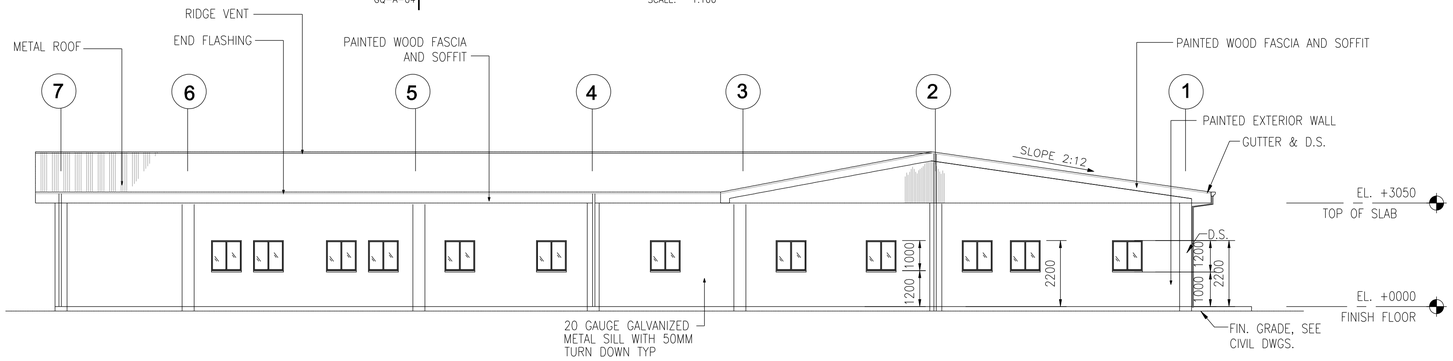

D SIDE ELEVATION

GQ-A-04 SCALE: 1:100

1 0 1 2 3 4 5 6 7 8 9
1:100

SYMBOL	DESCRIPTION	DATE	APR

DESIGNED BY: YSK
DATE: 06-27-07
DWN BY: JSG
SUBMITTED BY: CHIEF, PM PACIFIC DEV
CHK BY: PLD
FILE NO.: AF0707PF-GQ-A-04

US Army Corps of Engineers Transatlantic Programs Center

ANA REGIONAL BRIGADE
PAKTIKA, AFGHANISTAN

GARRISON HQ BUILDING
EXTERIOR ELEVATION

SHEET REFERENCE NUMBER:
PF
GQ-A-04

$(getvar, "dwgprefix")$(getvar, "dwgname")$(edtime, O, MON DD",", YYYY - HHMMam/pm)

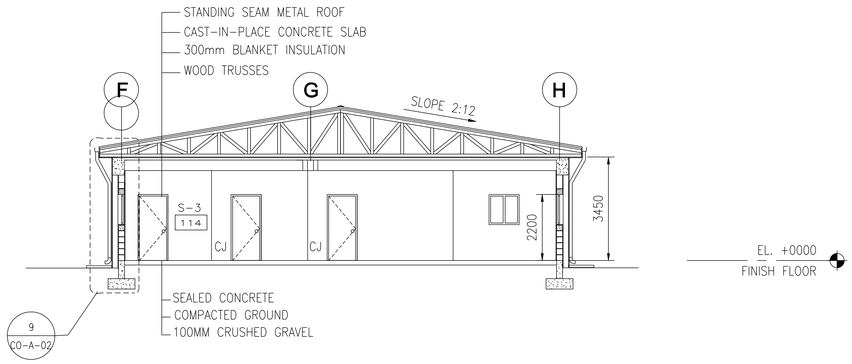

1 SECTION

GQ-A-05 SCALE: 1:100

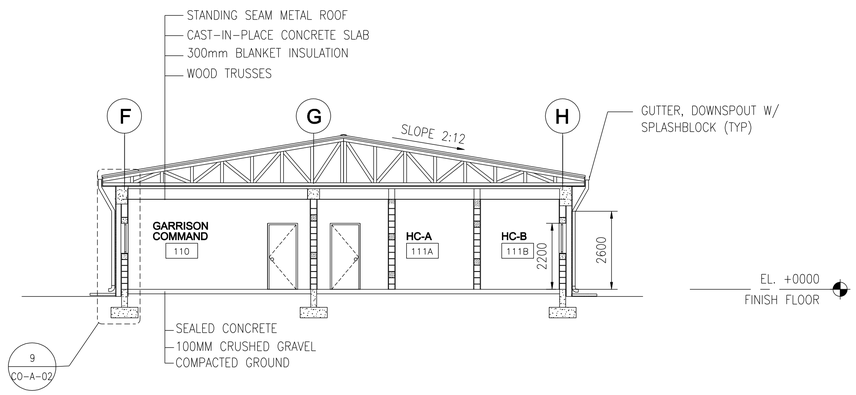

2 SECTION

GQ-A-05 SCALE: 1:100

1 0 1 2 3 4 5 6 7 8 9
1:100

SYMBOL	DESCRIPTION	DATE	APR

DESIGNED BY: YSK
DATE: 06-27-07
DWN BY: JSG
SUBMITTED BY: PHILIP J. PINELLO, CHIEF, DEV & FACILITIES DIV
CHK BY: PLD
FILE NO.: AF0707PF-GQ-A-05

US Army Corps of Engineers
Transatlantic Programs Center

ANA REGIONAL BRIGADE
PAKTIKA, AFGHANISTAN

GARRISON HQ BUILDING
BUILDING SECTIONS

SHEET REFERENCE NUMBER:
PF
GQ-A-05

$(getvar, "dwgprefix")$(getvar, "dwgname")$(edtime, O, MON DD",", YYYY - H:MMam/pm)

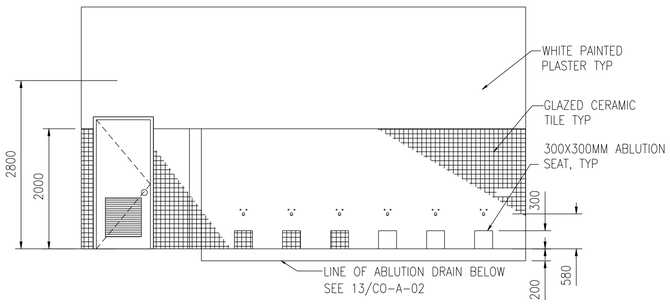

A ELEVATION – ABLUTION SINKS
GQ-A-06 SCALE: 1:50

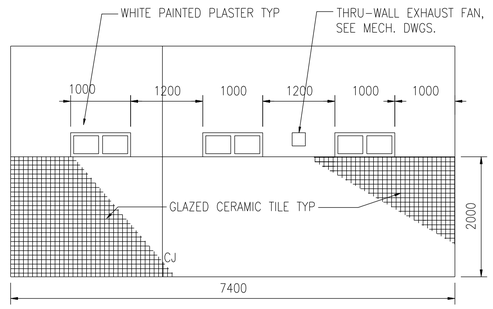

B ELEVATION
GQ-A-06 SCALE: 1:50

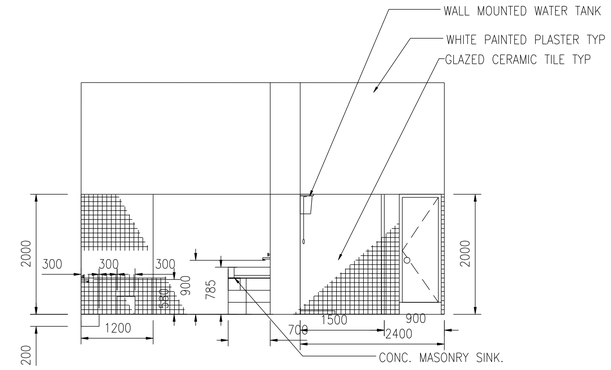

C ELEVATION
GQ-A-06 SCALE: 1:50

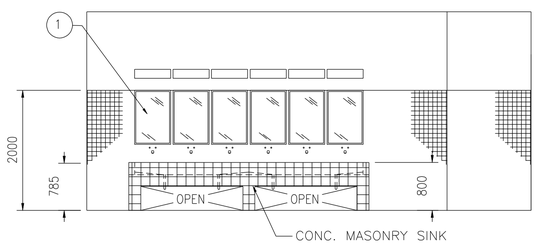

D ELEVATION – SINKS
GQ-A-06 SCALE: 1:50

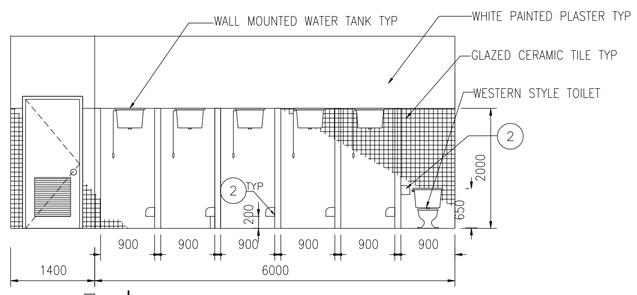

E ELEVATION – TOILETS
GQ-A-06 SCALE: 1:50

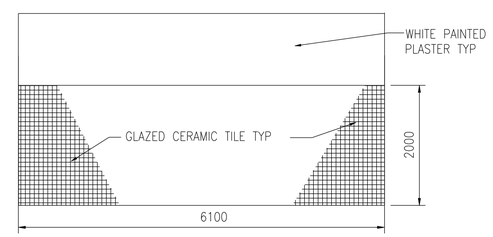

F ELEVATION
GQ-A-06 SCALE: 1:50

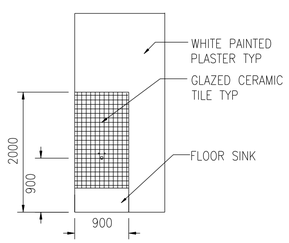

G ELEVATION – SINK
GQ-A-06 SCALE: 1:50

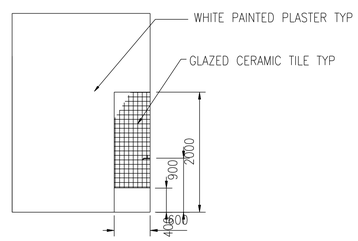

H ELEVATION – SINK
GQ-A-06 SCALE: 1:50

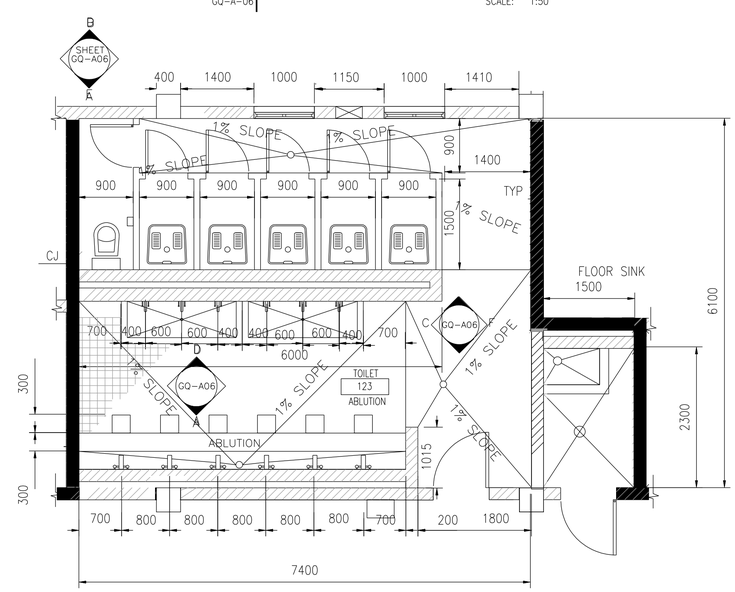

1 TOILET AND J.C. ENLARGED FLOOR PLAN
GQ-A-06 SCALE: 1:50

TOILET ACCESSORY SCHEDULE

NO.	DESCRIPTION
1	MIRROR 600X900X6MM GLASS
2	STAINLESS STEEL TOILET PAPER HOLDER
3	SHOWER CURTAIN & ROD – NOT USED
4	SOAP HOLDER – NOT USED
5	METAL PEG – NOT USED

NOTES:

1- ALL WALLS ARE CMU UNLESS NOTED OTHERWISE.

2- ALL WALLS ARE UP TO CEILING LEVEL UNLESS NOTED OTHERWISE.

3- ALL DOOR JAMBS ARE 200MM UNLESS NOTED OTHERWISE.

4- ALL DIMENSIONS ARE MEASURED FROM CMU SURFACE.

5- ALL WALLS REFERRING TO NOTE 5 AND PARTITIONS BETWEEN TOILET/SHOWERS STALLS SHALL BE 2000MM HEIGHT PARTIAL WALLS. – TYP.

6- ALL DIMENSIONS & LEVELS ARE MEASURED FROM TOP OF GROUND FLOOR CONCRETE LEVEL ±0000.

7- SEE DRAWING CO-A-05 &CO-A-06 FOR OPENINGS SCHEDULES & TYPES.

8- SEE DRAWING CO-A-02, CO-A-03 & CO-A-04 FOR STANDARD DETAILS.

9- F.F.L. STANDS FOR FINISH FLOOR LEVEL.

1 0 1 2 3 4
1:50

SYMBOL	DESCRIPTION	DATE	APR

DESIGNED BY: YSK
DATE: 06-27-07
DWN BY: JSG
SUBMITTED BY: PANELIO CHIEF, PROJ FACILITIES DEV
CHK BY: PLD
FILE NO.: AF0707PF-GQ-A-06

US Army Corps of Engineers Transatlantic Programs Center

ANA REGIONAL BRIGADE
PAKTIKA, AFGHANISTAN

GARRISON HQ BUILDING
ENLARGED TOILET PLAN AND ELEVATIONS

SHEET REFERENCE NUMBER:
PF
GQ-A-06

$(getvar, "dwgprefix")$(getvar, "dwgname")$(edtime, 0, MON DD",", YYYY - HH:MMam/pm)

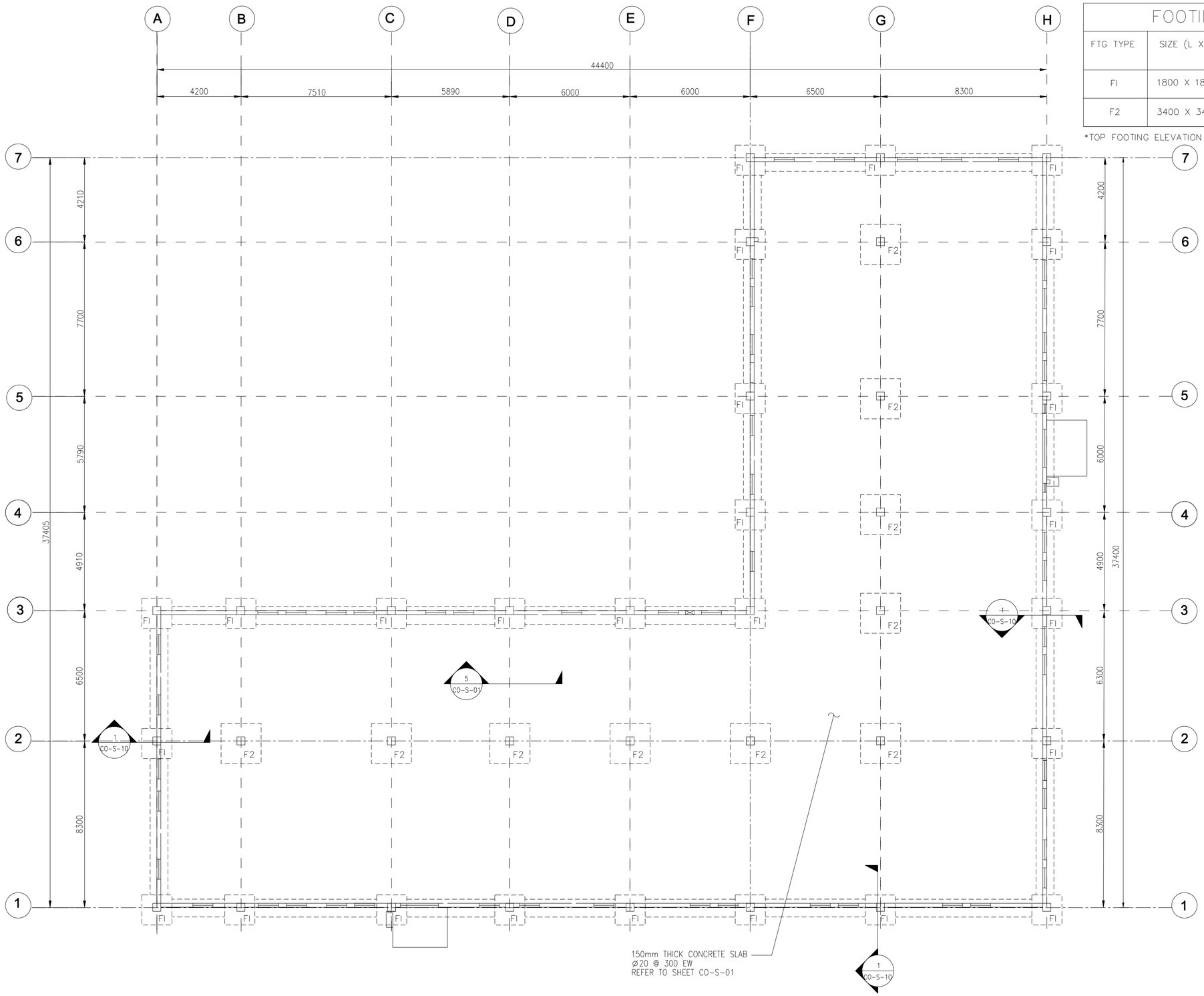

FOOTING SCHEDULE

FTG TYPE	SIZE (L X W)	DEPTH (D)*	REINF.	
			TOP EW	BOTT EW
F1	1800 X 1800	400	ø 13 @ 180	ø 16 @ 180
F2	3400 X 3400	400	ø 13 @ 180	ø 16 @ 180

*TOP FOOTING ELEVATION SHALL BE THE SAME FOR ALL FOOTINGS.

FOUNDATIONS ARE DESIGNED USING AN ALLOWABLE BEARING PRESSURE OF 0.75 KG/SQ. CM (1500 PSF), AND BOTTOM OF FOOTINGS ARE PLACED AS SHOWN ON DRAWINGS. GEOTECHNICAL INVESTIGATION SHALL CONFIRM BEARING CAPACITY TO BE NO LESS THAN 0.75 KG/SQ CM. IF GEOTECHNICAL INVESTIGATION SHOWS LESS THAN 0.75 KG/SQ CM THE CONTRACTOR SHALL REDESIGN FOOTINGS BASED ON THE GEOTECHNICAL INVESTIGATION. SEE SPECIFICAITON PARAGRAPH, GEOTECHNICAL, FOUNDATION AND SURVEY.

NOTES:

1. FOR EXACT CMU WALL LOCATIONS REFER TO ARCHITECTURAL DWGS.
2. FOR LOCATION OF SLOPED AND DEPRESSED SLABS, SEE ARCHITECTURAL DWGS.
3. SEE TYPICAL DETAILS FOR CONTROL JOINTS AT INTERIOR WALL INTERSECTIONS AND CORNERS.

1 0 1 2 3 4 5 6 7 8 9
1:100

1 FOUNDATION AND SLAB ON GRADE PLAN

GQ-S-01 | REF. GQ-S-01 SCALE: 1:100

SYMBOL	DESCRIPTION	DATE	APR

DESIGNED BY: TCP
DWN BY: TCP
CHK BY: KGO
DATE: 06-27-07
SUBMITTED BY: DANIELLO CHIEF, PROJECTS DEV
FILE NO.: AF0707PF-GQ-S-01

US Army Corps of Engineers Transatlantic Programs Center

ANA REGIONAL BRIGADE
PAKTIKA, AFGHANISTAN

GARRISON HQ BUILDING

FOUNDATION PLAN

SHEET REFERENCE NUMBER:
PF
GQ-S-01

$(getvar, "dwgprefix")$(getvar, "dwgname")$(edtime, 0, MON DD",", YYYY - HHMMam/pm)

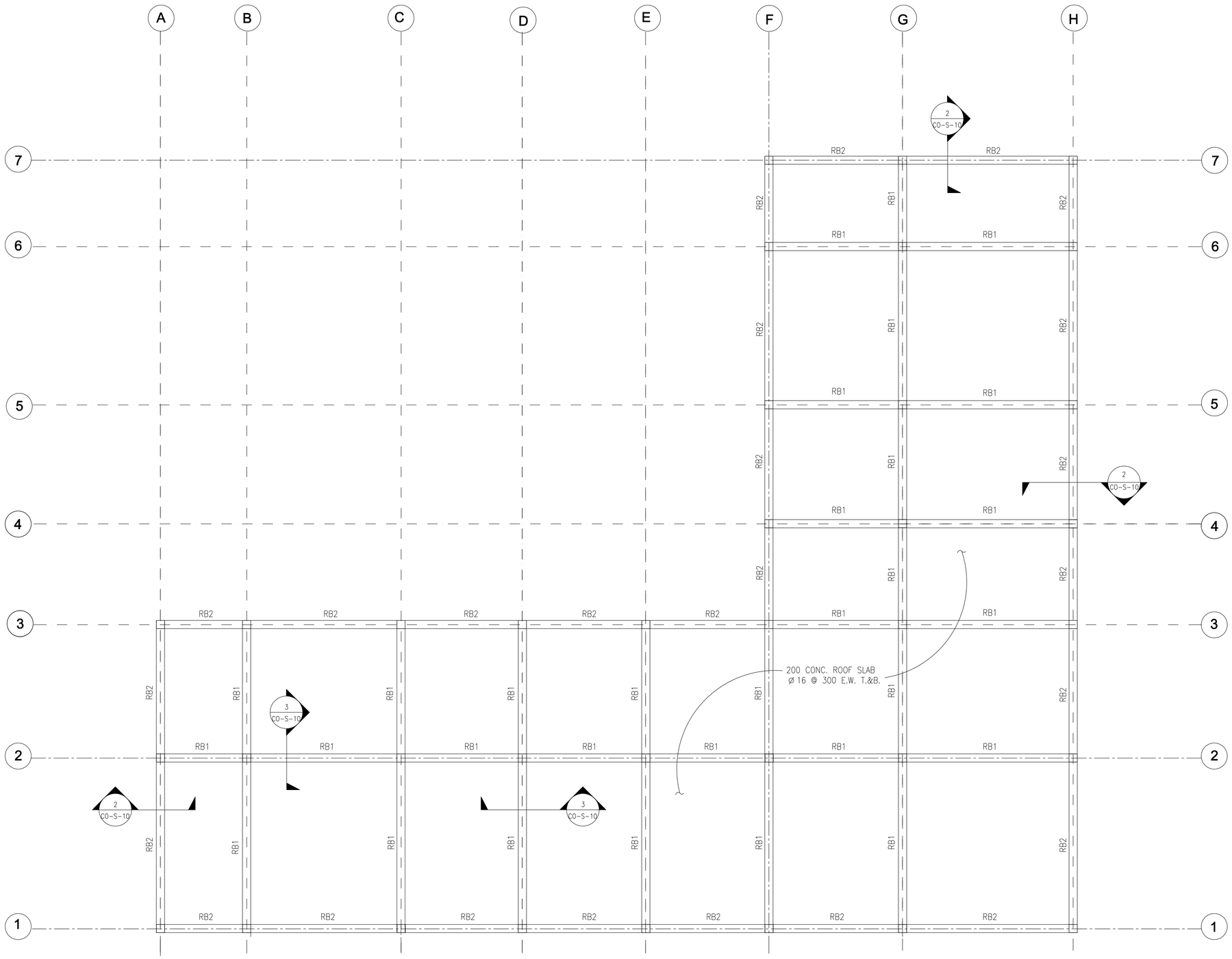

A1 ROOF FRAMING PLAN

GQ-S-02 SCALE: 1:100

1 0 1 2 3 4 5 6 7 8 9
1:100

SYMBOL	DESCRIPTION	DATE	APR

DESIGNED BY: TCP
DATE: 06-27-07
DWN BY: TCP
SUBMITTED BY: PAUL P. PANELLO CHIEF, PDT PACIFICS DEV
CHK BY: KGO
FILE NO.: AF0707 PF-GQ-S-02

US Army Corps of Engineers Transatlantic Programs Center

ANA REGIONAL BRIGADE
PAKTIKA, AFGHANISTAN

GARRISON HQ BUILDING

ROOF FRAMING PLAN

SHEET REFERENCE NUMBER:
PF
GQ-S-02

$(getvar, "dwgprefix")$(getvar, "dwgname")$(edtime, O, MON DD",' YYYY - HHMMam/pm)

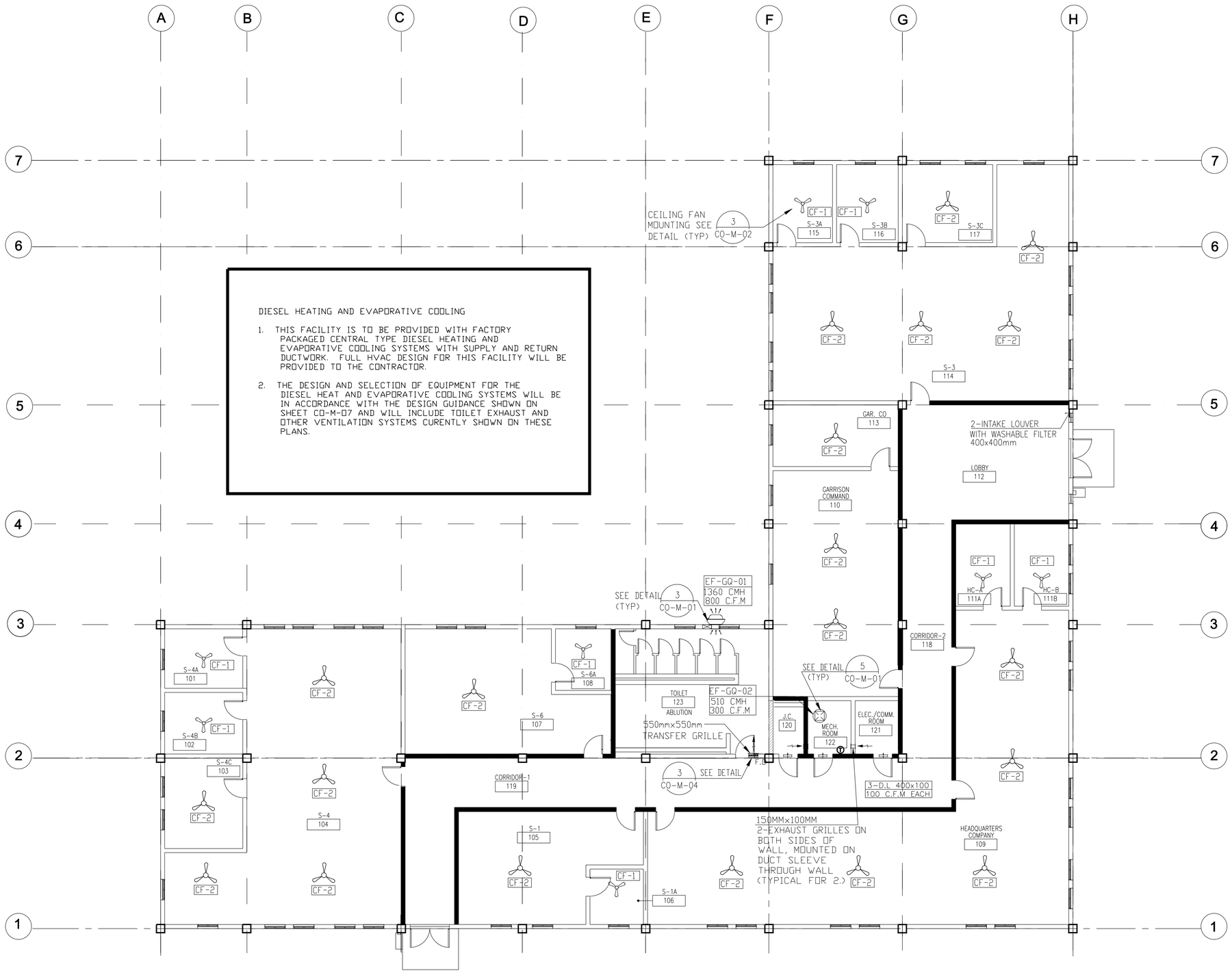

DIESEL HEATING AND EVAPORATIVE COOLING

1. THIS FACILITY IS TO BE PROVIDED WITH FACTORY PACKAGED CENTRAL TYPE DIESEL HEATING AND EVAPORATIVE COOLING SYSTEMS WITH SUPPLY AND RETURN DUCTWORK. FULL HVAC DESIGN FOR THIS FACILITY WILL BE PROVIDED TO THE CONTRACTOR.

2. THE DESIGN AND SELECTION OF EQUIPMENT FOR THE DIESEL HEAT AND EVAPORATIVE COOLING SYSTEMS WILL BE IN ACCORDANCE WITH THE DESIGN GUIDANCE SHOWN ON SHEET CO-M-07 AND WILL INCLUDE TOILET EXHAUST AND OTHER VENTILATION SYSTEMS CURENTLY SHOWN ON THESE PLANS.

1 MECHANICAL FLOOR PLAN

GQ-M-01

SCALE: 1:100

NOTES:

1. FOR STANDARD DETAILS SEE DWG. No. (CO-M-01, 02, 03 & 04).
2. FOR CONTROL DIAGRAMS SEE DWG. No. (CO-M-05).
3. FOR LEGEND AND ABBREVIATION SEE DWG. No. (CO-M-06).

SYMBOL	DESCRIPTION	DATE	APR

DESIGNED BY: XXX
DATE: 06-27-07
DWN. BY: XXX
SUBMITTED BY: R. GREWAL CHIEF, PD-T BLDG SYSTEMS
CHK. BY: XXX
FILE NO.: AF0707 PF-GQ-M-01

US Army Corps of Engineers Transatlantic Programs Center

ANA REGIONAL BRIGADE
PAKTIKA, AFGHANISTAN

GARRISON HQ BUILDING

MECHANICAL FLOOR PLAN

SHEET REFERENCE NUMBER:
PF
GQ-M-01

1:100 DRAWING NOT TO SCALE

EXHAUST FAN SCHEDULE (EF)

UNIT SYMBOL BUILDING NUMBER	SERVICE	TYPE	AIR QUANTITY		MAXIMUM WHEEL DIAMETER		FAN RPM	STATIC PRESSURE		ELECTRICAL DATA				TEMP. CONTROL DIAGRAM	INTERLOCK WITH	DRIVE TYPE	REMARKS
			CMH	CFM	MM	INCHES		mmH2O	IN W.G.	H.P.	VOLTS	PHASE	HERTZ				
EF-GQ-01	TOILET SHOWER	W-CTFG-GP	1355	800	-	-	1290	6.35	1/4	1/4	220	1	50	E-4	WALL SWITCH	DIRECT	SEE NOTES No.(1,2,3,4)
EF-GQ-02	MECH.	R-CTFG-GP	505	300	-	-	1125	6.35	1/4	1/4	380	3	50	E-3	TSTAT	DIRECT	SEE NOTES No.(1,2,3,4)

NOTES:-

1-PROVIDE DISCONNECT SWITCH.
2-PROVIDE ALUMINUM GRAVITY BACKDRAFT DAMPER.
3-SEE ARCHITECTURAL DWGS. FOR ROOF CURB.
4-PROTYPE IS GREENHECK SERIES "GB".

FAN SCHEDULE TYPE - LEGEND
(REF. EXHAUST AND SUPPLY FAN SCHEDULES)

R-CTFG-GP

- GP = GENERAL PURPOSE
  - EP = EXPLOSION PROOF
  - DB = DOWN BLAST
  - UB = UP BLAST
  - UT = UTILITY SET
- CTFG = CENTRIFUGAL
  - PROP = PROPELLER
  - TUBA = TUBE AXIAL
  - TUCF = TUBULAR CENTRIFUGAL
  - VA = VANE AXIAL
- R =ROOF
  - W = WALL
  - IL = INLINE
  - CL = CEILING

CEILING FAN SCHEDULE (CF)

UNIT NUMBER	QTY.	TYPE (NOTE 1)	FAN DIAMETER	MAX WATTS	ELECTRICAL DATA			REMARKS
					VOLTS	PHASE	HERTZ	
CF-1	8	A	35 in	65	220	1	50	3-SPEED
CF-2	20	A	56 in	65	220	1	50	3-SPEED

NOTES:- 1- (A) WITHOUT LIGHT FIXTURE
2- BOTTOM OF FAN MOUNTING HEIGHT = MINIMUM 2500mm A.F.F
3- PROVIDE WITH REMOTE WALL MOUNTED, ON-OFF SWITCH LOCATED ON ELECTRICAL DRAWINGS.

ELECTRIC UNIT HEATER SCHEDULE (UH)

UNIT NUMBER	QTY.	HEATING CAPACITY		ELECTRICAL DATA			REMARKS
		KW	BTUH	VOLTS	PHASE	HERTZ	
UH-1	1	2.0	6820	220	1	50	WALL SUSPENDED

MANUFACTURER SHALL PROVIDE WITH BUILT-IN THERMOSTATS/ON-OFF SWITCH WITH OVERLOAD PROTECTION

DRAWING NOT TO SCALE

SYMBOL	DESCRIPTION	DATE	APR

DESIGNED BY: XXX
DWN BY: XXX
CHK BY: XXX
DATE: 06-27-07
SUBMITTED BY: CHIEF, PANELIQ DEV CHIEF, PROJECTS
FILE NO.: AF0707PF-GQ-M-02

US Army Corps of Engineers
Transatlantic Programs Center

ANA REGIONAL BRIGADE
PAKTIKA, AFGHANISTAN

GARRISON HQ BUILDING

SCHEDULES

SHEET REFERENCE NUMBER:
PF
GQ-M-02

$(getvar, "dwgprefix")$(getvar, "dwgname")$(edtime, 0, MON DD",", YYYY - HHMMam/pm)

NOTE:

1. SEE SHEET CO-P-01 & CO-P-02 & CO-P-07 FOR SYMBOLS, ABBREVIATIONS, GENERAL NOTES AND EQUIPMENT SCHEDULES.
2. RELOCATE WATER SERVICE ENTRY TO MATCH ACTUAL SITE WATER NETWORK.

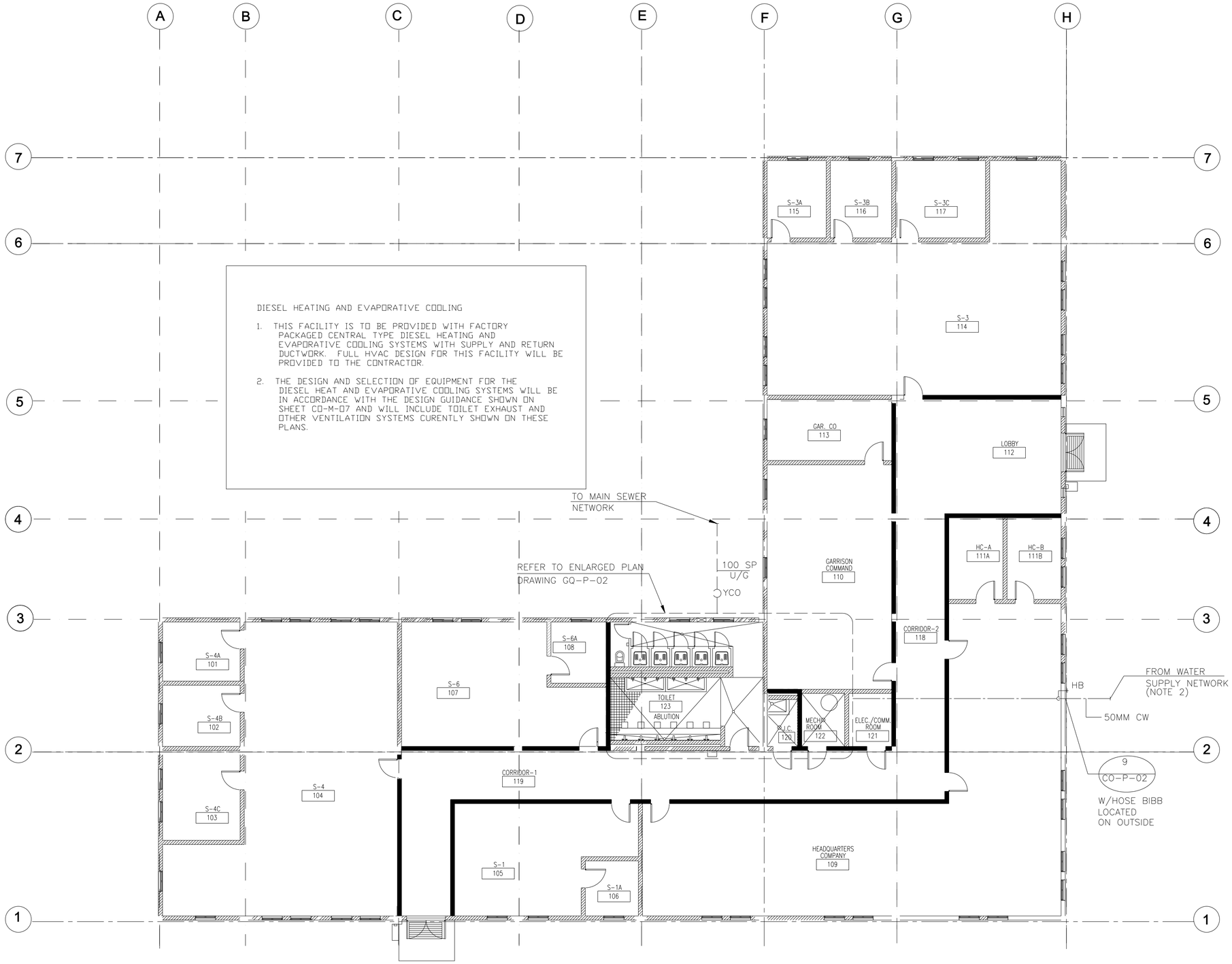

1 PLUMBING FLOOR PLAN

GQ-P-01 SCALE: 1:100

1 0 1 2 3 4 5 6 7 8 9
1:100

SYMBOL	DESCRIPTION	DATE	APR

DESIGNED BY: XXX
DATE: 06-27-07
DWN BY: XXX
SUBMITTED BY: R. CREWAL CHIEF, PDT BLDG SYSTEMS
CHK BY: XXX
FILE NO.: AF0707PF-GQ-P-01

US Army Corps of Engineers Transatlantic Programs Center

ANA REGIONAL BRIGADE
PAKTIKA, AFGHANISTAN

GARRISON HQ BUILDING

PLUMBING FLOOR PLAN

SHEET REFERENCE NUMBER:
PF
GQ-P-01

$(getvar, "dwgprefix")$(getvar, "dwgname")$(edtime, 0, MON DD",": YYYY - H:MMam/pm)

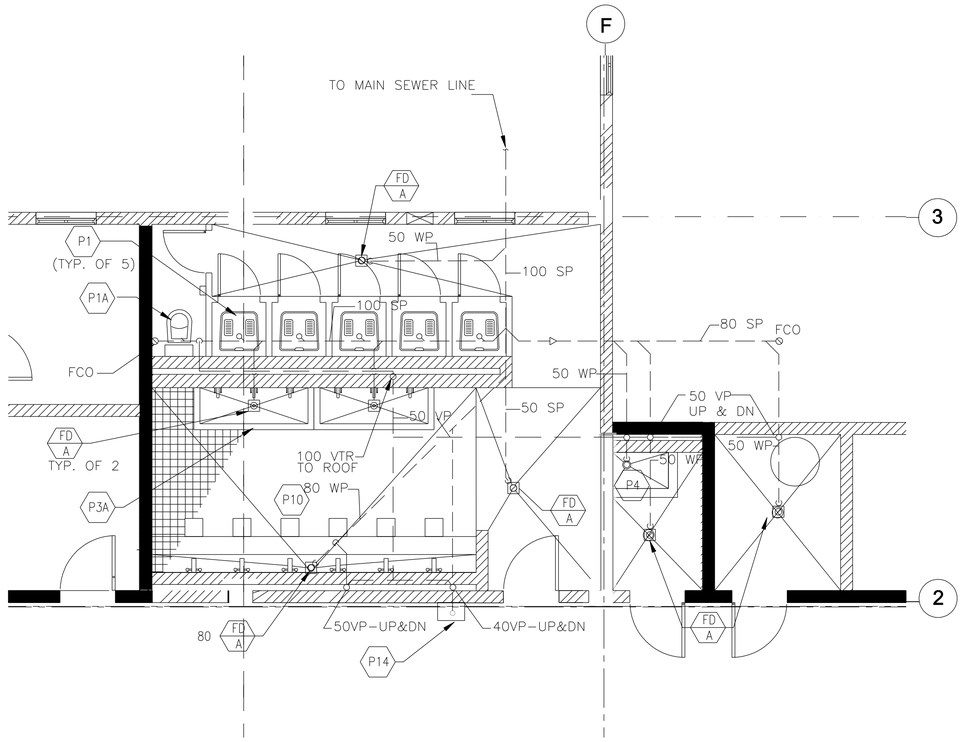

1 DRAINAGE PIPING PLAN

GQ-P-02 SCALE: 1:100

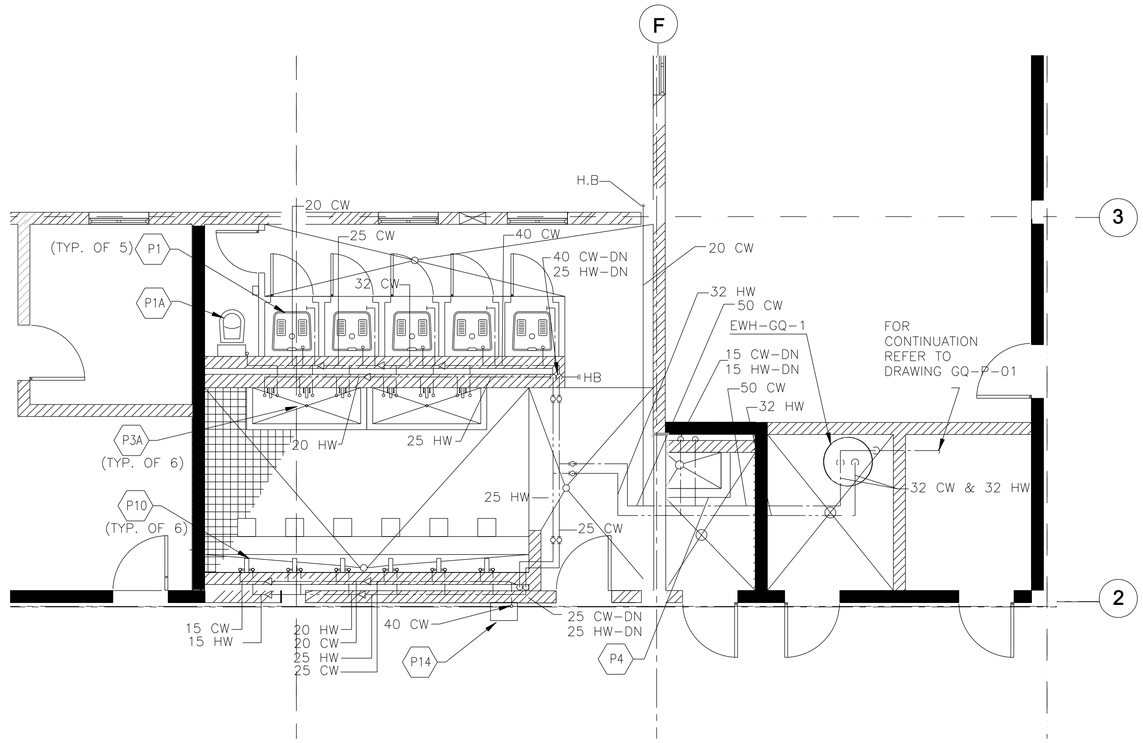

2 DOMESTIC HOT AND COLD WATER FLOOR PLAN

GQ-P-02 SCALE: 1:100

NOTE:

1. SEE SHEET CO-P-01 & CO-P-02 & CO-P-07 FOR SYMBOLS, ABBREVIATIONS, GENERAL NOTES AND EQUIPMENT SCHEDULES.

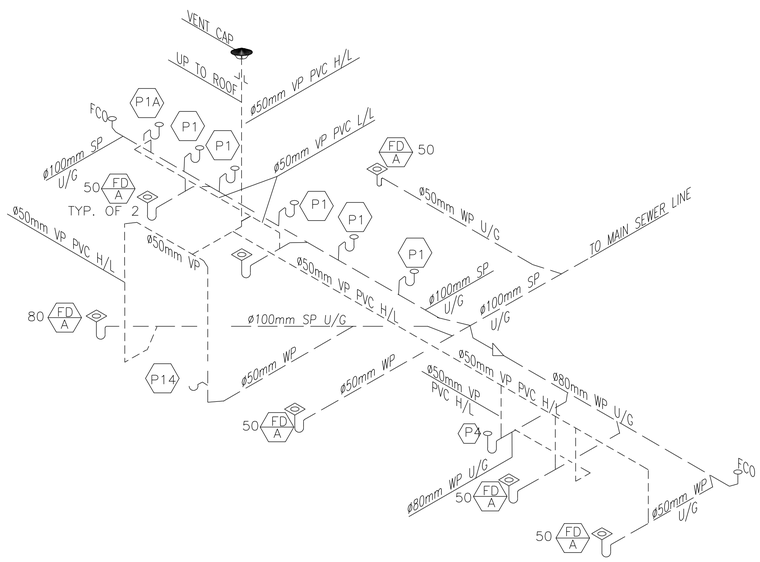

3 SANITARY/WASTE AND VENT RISER DIAGRAM

GQ-P-02 SCALE: N.T.S

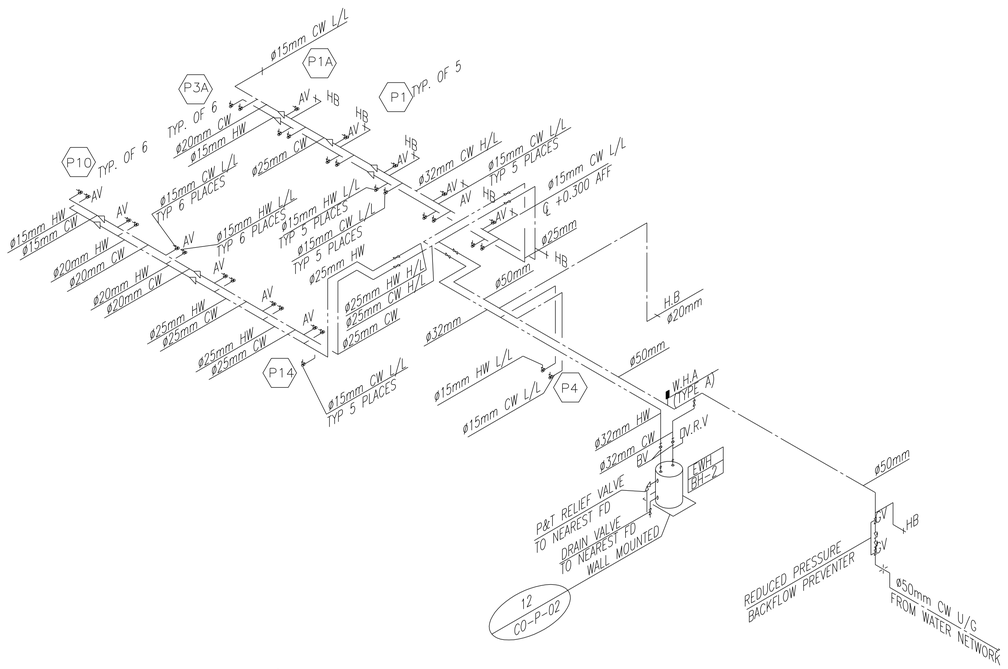

4 DOMESTIC HOT AND COLD WATER RISER DIAGRAM

GQ-P-02 SCALE: N.T.S

1 0 1 2 3 4 5 6 7 8 9
1:100

SYMBOL	DESCRIPTION	DATE	APR

DESIGNED BY: XXX
DATE: 06-27-07
DWN BY: XXX
SUBMITTED BY: R. CREWAL CHIEF, PDT BLDG SYSTEMS
CHK BY: XXX
FILE NO.: AF0707PF-GQ-P-02

US Army Corps of Engineers Transatlantic Programs Center

ANA REGIONAL BRIGADE
PAKTIKA, AFGHANISTAN

GARRISON HQ BUILDING
PLUMBING PART PLANS AND RISER DIAGRAMS

SHEET REFERENCE NUMBER:
PF
GQ-P-02

$(getvar, "dwgprefix")$(getvar, "dwgname")$(edtime, 0, MON DD"," YYYY - HHMMam/pm)

GARRISON HQ PANEL PP

AIC: 25KA

225/250 MCB
MLO

VOLTAGE 380/220V, 3PH, 5W, 50HZ

FEED BOTTOM
MOUNTING SURFACE
LOCATION ROOM # 121

DESCRIPTION	LOAD (VA) A	B	C	AMP	POLE	CKT	A	B	C	CKT	POLE	AMP	LOAD (VA) A	B	C	DESCRIPTION
TTC RECEP	180			20	1	1				2	1	20				SPARE
TTC RECEP		180		20	1	3				4	1	20				SPARE
SPARE				20	1	5				6	1	20				SPARE
SPARE				20	1	7				8	1	20				SPARE
SPARE				20	1	9				10	1	20				SPARE
SPARE				20	1	11				12	1	20				SPARE
SPARE				20	1	13				14	1	20				SPARE
SPARE				20	1	15				16	1	20				SPARE
SPARE				20	1	17				18	1	20				SPARE
SPARE				20	1	19				20	1	20				SPARE
SPARE				20	1	21				22	1	20				SPARE
SPARE				20	1	23				24	1	20				SPARE
SPARE				20	1	25				26	3	20	11885			LP1
SPARE				20	1	27				28				11815		
SPARE				20	1	29				30					11885	
SPARE				20	1	31				32	3	20	3000			EWH-GQ-01
SPARE				20	1	33				34				3000		
SPARE				20	1	35				36					3000	
SPACE				20	1	37				38	1	20				SPACE
SPACE				20	1	39				40	1	20				SPACE
SPACE				20	1	41				42	1	20				SPACE
SUB-TOTALS=	180	180	0										14885	14885	14885	= SUB-TOTALS

	V A	AMPS
TOTAL PHASE A=	15065	68.5
TOTAL PHASE B=	15065	68.5
TOTAL PHASE C=	14885	67.7
TOTAL CONNECTED LOAD	45	KVA
DEMAND FACTOR	0.87	
DEMAND LOAD	39.16	KVA
20% FUTURE LOAD	7.8	KVA
TOTAL LOAD	47	KVA
TOTAL AMPERE	71.48	AMP

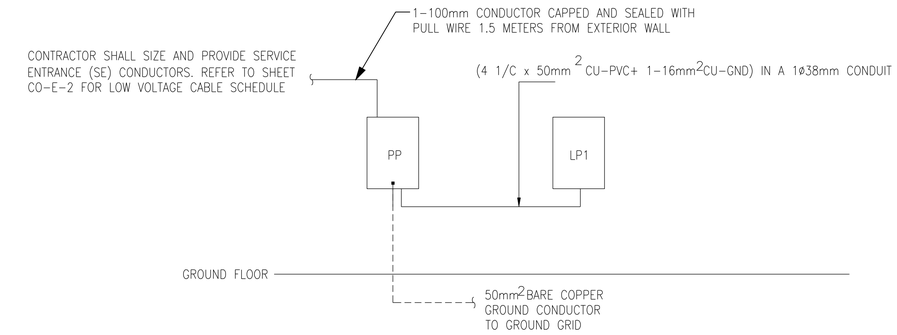

1 POWER RISER DIAGRAM

BH-E-01 SCALE: N.T.S.

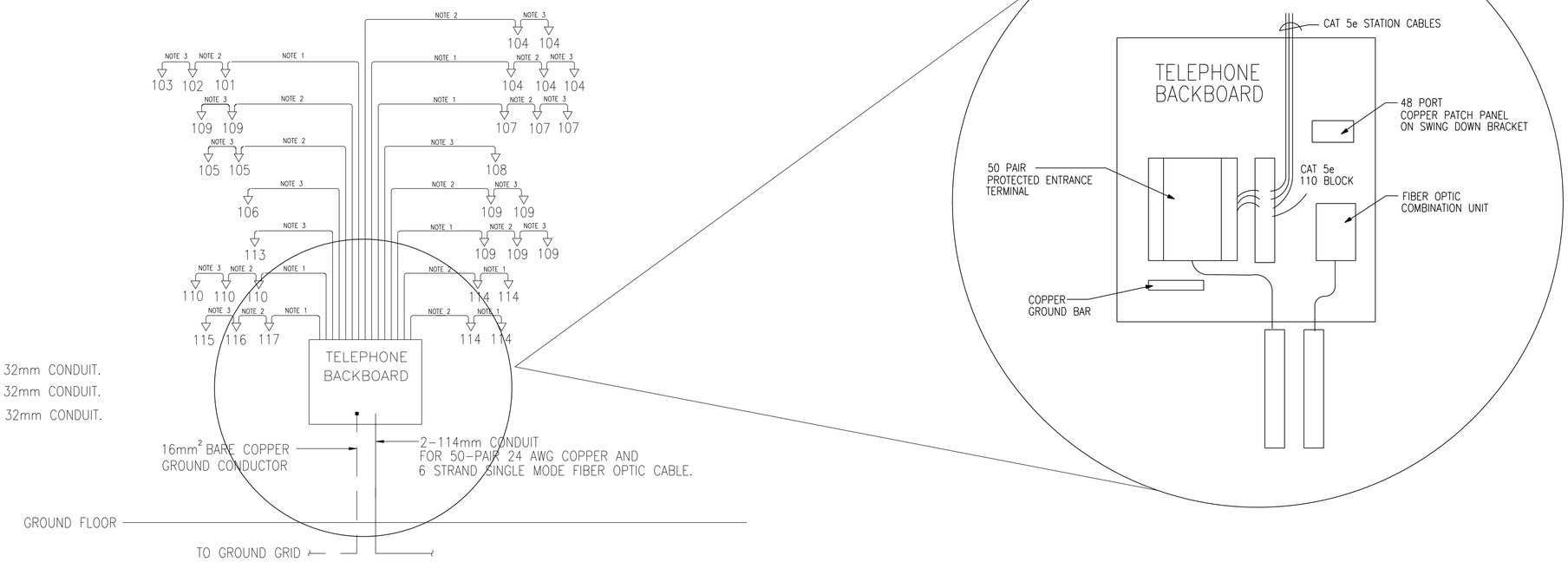

NOTES

NOTE 1. 3(2-4 PAIR) CAT 5e CABLES IN 32mm CONDUIT.
NOTE 2. 2(2-4 PAIR) CAT 5e CABLES IN 32mm CONDUIT.
NOTE 3. 1(2-4 PAIR) CAT 5e CABLES IN 32mm CONDUIT.

2 TELEPHONE/DATA RISER DIAGRAM

BH-E-01 SCALE: N.T.S.

DESIGNBUILD

1. SEE MECHANICAL DRAWINGS FOR DESIGN BUILD REQUIREMENTS USING DIESEL HEATING AND EVAPORATIVE COOLING IN THIS FACILTY.
2. COORDINATE WITH MECHANICAL DESIGNER AND REVISE ELECTRICAL DESIGN, POWER DISTRIBUTION AND PANEL SCHEDULES TO MEET NEW REQUIREMENTS.

NOTES:

1. SEE SHEET CO-E-01 FOR SYMBOLS, ABBREVIATIONS AND GENERAL NOTES.
2. SEE SHEET CO-E-02 FOR CABLE SCHEDULE.

DRAWING NOT TO SCALE

SYMBOL	DESCRIPTION	DATE	APR

DESIGNED BY: XXX
DWN BY: XXX
CHK BY: XXX
DATE: 06-27-07
SUBMITTED BY: R. CREWAL, CHIEF, BLDG SYSTEMS
FILE NO.: AF0707PF-GQ-E-01

US Army Corps of Engineers Transatlantic Programs Center

ANA REGIONAL BRIGADE
PAKTIKA, AFGHANISTAN

GARRISON HQ BUILDING
PANEL SCHEDULES AND RISER DIAGRAMS

SHEET REFERENCE NUMBER:
PF
GQ-E-01

$(getvar, "dwgprefix")$(getvar, "dwgname")$(edtime, 0, MON DD"," YYYY - HHMMam/pm)

GARRISON PANEL LP1

AIC: 25KA

FEED BOTTOM

MCB
150A MLO

MOUNTING SURFACE
LOCATION ROOM # 102

VOLTAGE 380/220V, 3PH, 5W, 50HZ

DESCRIPTION	A	B	C	AMP	POLE	CKT	A	B	C	CKT	POLE	AMP	A	B	C	DESCRIPTION
	LOAD (VA)												LOAD (VA)			
RM 110,111A,111B,LTG	1600			20	1	1				2	1	20	2600			RM 113,114,LTG
RM 104,LTG		2600		20	1	3				4	1	20		2480		CORRIDOR 112,118,119 LTG
RM 109,LTG			2800	20	1	5				6	1	20			1200	RM 105,106 LTG
RM 107,108,LTG	1200			20	1	7				8	1	20	1200			RM 115,116,117 LTG
RECEPTACLES RM 101,102		800		20	1	9				10	1	20		1000		RECEPTACLES RM 113,110
RECEPTACLES RM 103,104			800	20	1	11				12	1	20			1000	RECEPTACLES RM 114,112
RECEPTACLES RM 104	600			20	1	13				14	1	20	600			RECEPTACLES RM 121,120,122
RECEPTACLES RM 107,108		800		20	1	15				16	1	20		1200		RECEPTACLES RM 115,116,117
RECEPTACLES RM 109			800	20	1	17				18	1	20			300	RM 110,113 FANS
RECEPTACLES RM 109,111A,111B	1200			20	1	19				20	1	20	800			RECEPTACLES RM 112,119,118
RECEPTACLES RM 105,106		800		20	1	21				22	1	20		250		EF-GQ-01
RM 109,111A,111B FANS			700	20	1	23				24	1	20			1200	RM 101,102,103 LTG
RM 114,117,116,115 FANS	700			20	1	25				26	1	20	600			FOR FUTURE SELF DETECTOR
RM 104, FANS,		400		20	1	27				28	1	20		200		RM 107,108 FANS
RM 105,106, FANS,			200	20	1	29				30	1	20			1700	RM 120,121,122,123,LTG
FOR FUTURE SELF DETECTOR	700			20	1	31				32		20	85			EF-GQ-02
RM 101,102,103 FANS		300		20	1	33				34	3	20		85		
FOR FUTURE SELF DETECTOR			1100	20	1	35				36		20			85	
SPACE				20	1	37				38	1	20				SPARE
FOR FUTURE SELF DETECTOR		900		20	1	39				40	1	20				SPACE
SPACE				20	1	41				42	1	20				SPACE
SUB-TOTALS=	6000	6600	6400										5885	5215	5485	= SUB-TOTALS

	V A	AMPS
TOTAL PHASE A=	11885	54
TOTAL PHASE B=	11815	53.7
TOTAL PHASE C=	11885	54
TOTAL CONNECTED LOAD	35.3	KVA
DEMAND FACTOR	1.0	
DEMAND LOAD	35.3	KVA
20% FUTURE LOAD	7	KVA
TOTAL LOAD	42.3	KVA
TOTAL AMPERE	64.3	AMP

DESIGNBUILD

1. SEE MECHANICAL DRAWINGS FOR DESIGN BUILD REQUIREMENTS USING DIESEL HEATING AND EVAPORATIVE COOLING IN THIS FACILTY.
2. COORDINATE WITH MECHANICAL DESIGNER AND REVISE ELECTRICAL DESIGN, POWER DISTRIBUTION AND PANEL SCHEDULES TO MEET NEW REQUIREMENTS.

NOTES:

1. SEE SHEET CO-E-01 FOR SYMBOLS, ABBREVIATIONS, AND GENERAL NOTES
2. SEE SHEET CO-E-02 FOR BRANCH CIRCUIT WIRE SCHEDULE.

DRAWING NOT TO SCALE

SYMBOL	DESCRIPTION	DATE	APR

DESIGNED BY: XXX
DWN BY: XXX
CHK BY: XXX
DATE: 06-27-07
SUBMITTED BY: R. CREWAL CHIEF, ENGR BLDG SYSTEMS
FILE NO.: AF0707PF-GQ-E-02

US Army Corps of Engineers Transatlantic Programs Center

ANA REGIONAL BRIGADE
PAKTIKA, AFGHANISTAN

GARRISON HQ BUILDING

PANEL SCHEDULE

SHEET REFERENCE NUMBER:
PF
GQ-E-02

$(getvar, "dwgprefix")$(getvar, "dwgname")$(edtime, 0, MON DD",". YYYY - HHMMam/pm)

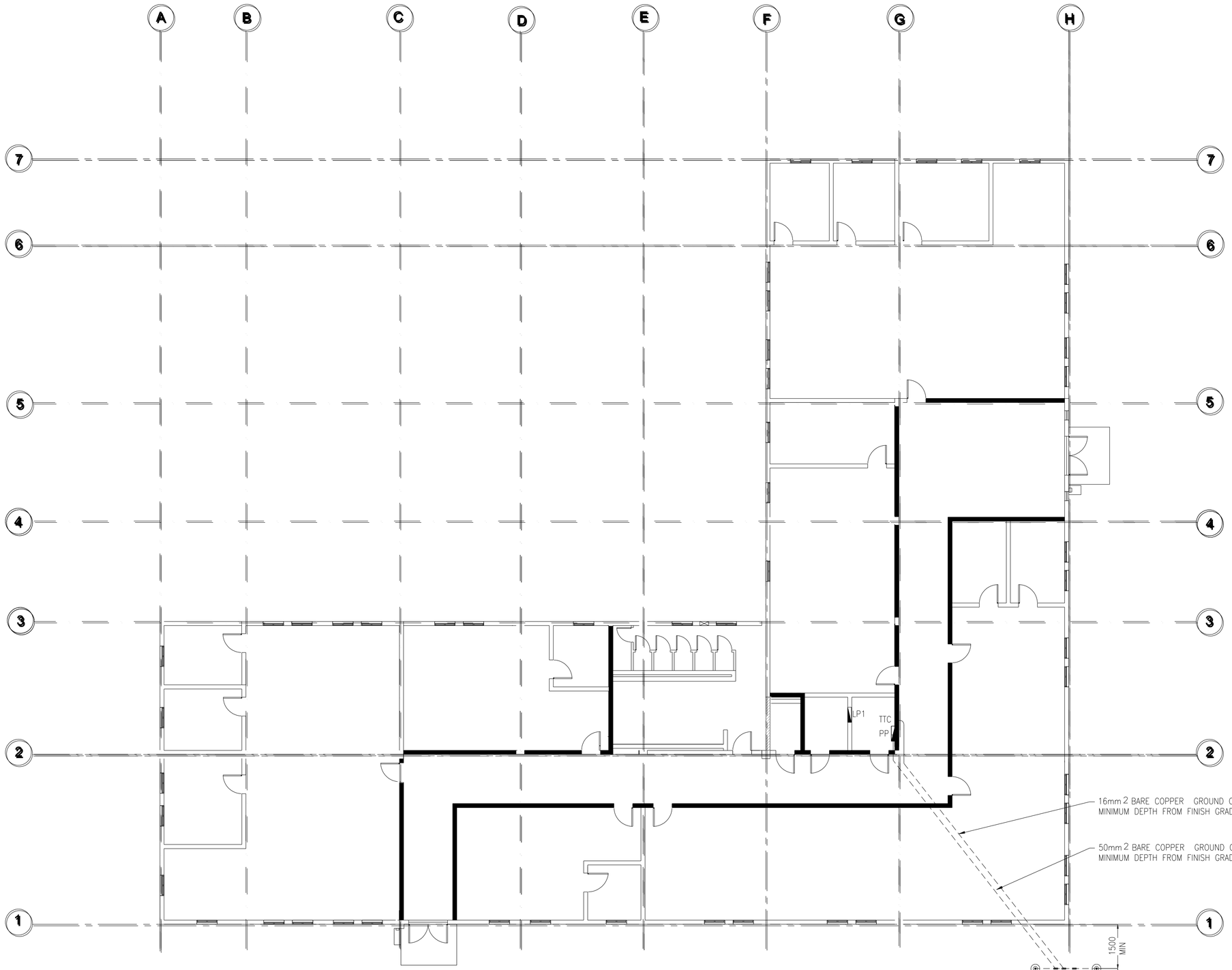

N

DESIGNBUILD

1. SEE MECHANICAL DRAWINGS FOR DESIGN BUILD REQUIREMENTS USING DIESEL HEATING AND EVAPORATIVE COOLING IN THIS FACILTY.
2. COORDINATE WITH MECHANICAL DESIGNER AND REVISE ELECTRICAL DESIGN, POWER DISTRIBUTION AND PANEL SCHEDULES TO MEET NEW REQUIREMENTS.

NOTES:

1. SEE SHEETS CO-E-01 AND CO-E-02. FOR SYMBOLS, ABBREVIATIONS GENERAL NOTES AND LIGHTING FIXTURE SCHEDULE.
2. SEE SHEETS CO-E-03 TO CO-E-05 FOR STANDARD DETAILS.
3. SEE SHEET GQ-E-01 AND GQ-E-02 FOR PANEL SCHEDULES AND RISER DIAGRAMS FOR POWER SYSTEM.

1:100 DRAWING NOT TO SCALE

1 GROUNDING PLAN
GQ-E-03
SCALE: 1:100

SYMBOL	DESCRIPTION	DATE	APR

DESIGNED BY: XXX
DATE: 06-27-07
DWN. BY: XXX
SUBMITTED BY: R. GREWAL CHIEF, PDT BLDG SYSTEMS
CHK. BY: XXX
FILE NO.: AF0707PF-GQ-E-03

US Army Corps of Engineers Transatlantic Programs Center

ANA REGIONAL BRIGADE
PAKTIKA, AFGHANISTAN

GARRISON HQ BUILDING

GROUNDING PLAN

SHEET REFERENCE NUMBER:
PF
GQ-E-03

$(getvar, "dwgprefix")$(getvar, "dwgname")$(edtime, 0, MON DD",", YYYY - HHMMam/pm)

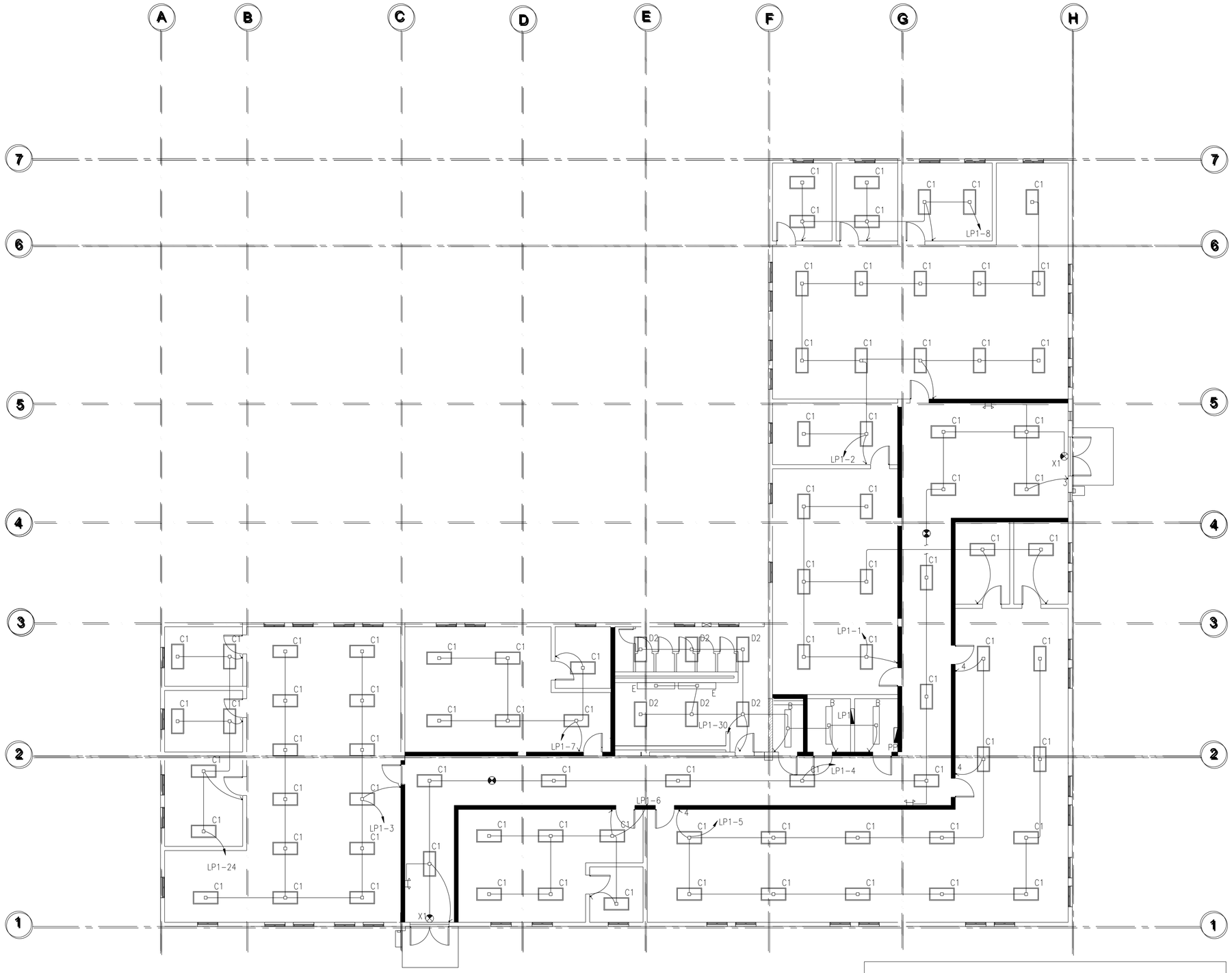

1 LIGHTING PLAN

GQ-E-04

SCALE: 1:100

DESIGNBUILD

1. SEE MECHANICAL DRAWINGS FOR DESIGN BUILD REQUIREMENTS USING DIESEL HEATING AND EVAPORATIVE COOLING IN THIS FACILTY.
2. COORDINATE WITH MECHANICAL DESIGNER AND REVISE ELECTRICAL DESIGN, POWER DISTRIBUTION AND PANEL SCHEDULES TO MEET NEW REQUIREMENTS.

NOTES:

1. SEE SHEETS CO-E-01 AND CO-E-02. FOR SYMBOLS, ABBREVIATIONS GENERAL NOTES AND LIGHTING FIXTURE SCHEDULE.
2. SEE SHEETS CO-E-03 TO CO-E-05 FOR STANDARD DETAILS.
3. SEE SHEET GQ-E-02 PANEL SCHEDULE

1 0 1 2 3 4 5 6 7 8 9

1:100 DRAWING NOT TO SCALE

SYMBOL	DESCRIPTION	DATE	APR

DESIGNED BY: XXX
DWN BY: XXX
CHK BY: XXX
DATE: 06-27-07
SUBMITTED BY: R. GREWAL CHIEF, PD-T BLDG SYSTEMS
FILE NO.: AF0707PF-GQ-E-04

US Army Corps of Engineers Transatlantic Programs Center

ANA REGIONAL BRIGADE
PAKTIKA, AFGHANISTAN

GARRISON HQ BUILDING

LIGHTING PLAN

SHEET REFERENCE NUMBER:
PF
GQ-E-04

$(getvar, "dwgprefix")$(getvar, "dwgname")$(edtime, 0, MON DD",". YYYY - HHMMam/pm)

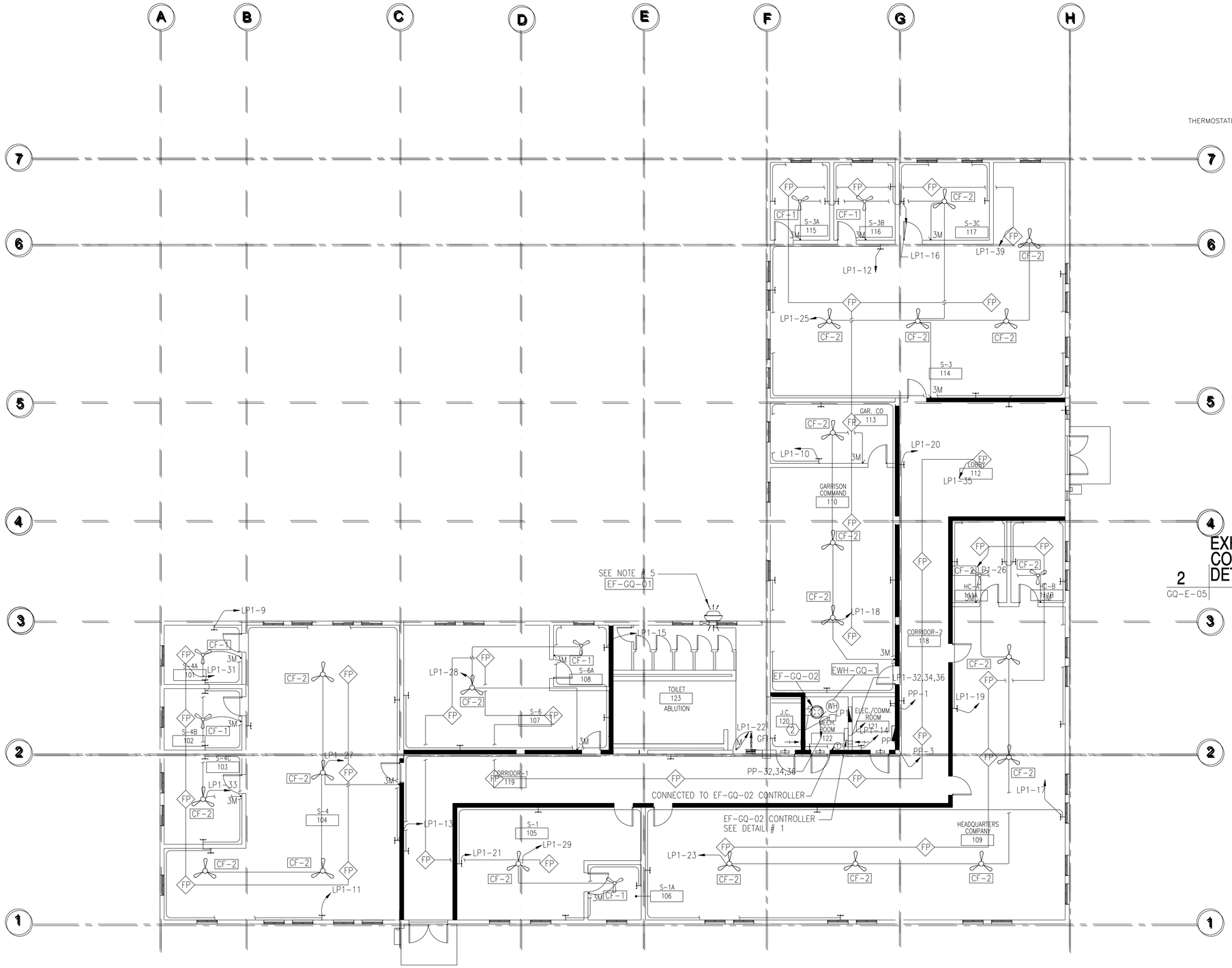

1 POWER PLAN

GQ-E-05 SCALE: 1:100

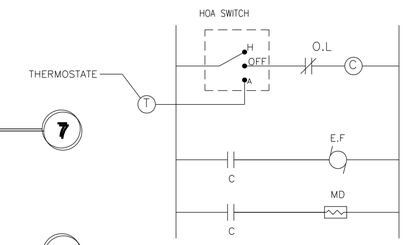

CONTROL DIAGRAM

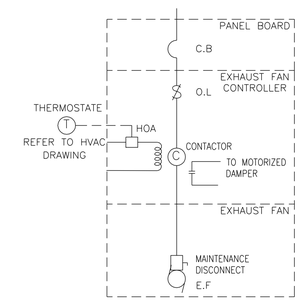

POWER CONNECTION

EXHAUST FAN # 2 CONTROLLER SCHEMATIC DIAGRAM DETAIL #1

2 GQ-E-05 SCALE: 1:100

KEY NOTS:

1. NOT USED
2. PROVIDE 30A/3P/380V NON-FUSED DISCONNECT SWITCH IN NEMA 1 ENCLOSURE.
3. PROVIDE 30A/3P/380V COMMUNICATIONS MOTOR START IN NEMA 1

NOTES:

1. SEE SHEET CO-E-01 FOR SYMBOLS, ABBREVIATIONS,AND GENERAL NOTES
2. SEE SHEETS CO-E-03 TO CO-E-05 FOR STANDARD DETAILS
3. SEE SHEETS GQ-E-01 AND GQ-E-02 FOR PANEL SCHEDULE AND RISER DIAGRAMS FOR POWER SYSTEM.
4. PROVIDE FIRE ALARM PULL BOXES FOR FUTURE SELF SMOKE DETECTOR, CONDUITS AND WIRING FOR FUTURE INSTALLATION OF SMOKE ALARMS
5. THE EXHAUST FAN SHALL BE EQUIPED WITH DISCONNECT SWITCH FOR MAINTENANCE

DESIGNBUILD

1.SEE MECHANICAL DRAWINGS FOR DESIGN BUILD REQUIREMENTS USING DIESEL HEATING AND EVAPORATIVE COOLING IN THIS FACILTY.

2. COORDINATE WITH MECHANICAL DESIGNER AND REVISE ELECTRICAL DESIGN, POWER DISTRIBUTION AND PANEL SCHEDULES TO MEET NEW REQUIREMENTS.

1 0 1 2 3 4 5 6 7 8 9
1:100 DRAWING NOT TO SCALE

SYMBOL	DESCRIPTION	DATE	APR

DESIGNED BY: XXX
DWN BY: XXX
CHK BY: XXX
DATE: 06-27-07
SUBMITTED BY: R. CREWAL CHIEF, PDT, Bldg SYSTEMS
FILE NO.: AF0707 PF-GQ-E-05

US Army Corps of Engineers Transatlantic Programs Center

ANA REGIONAL BRIGADE
PAKTIKA, AFGHANISTAN

GARRISON HQ BUILDING

POWER PLAN

SHEET REFERENCE NUMBER:
PF
GQ-E-05

$(getvar, "dwgprefix")$(getvar, "dwgname")$(edtime, 0, MON DD", YYYY - HHMMam/pm)

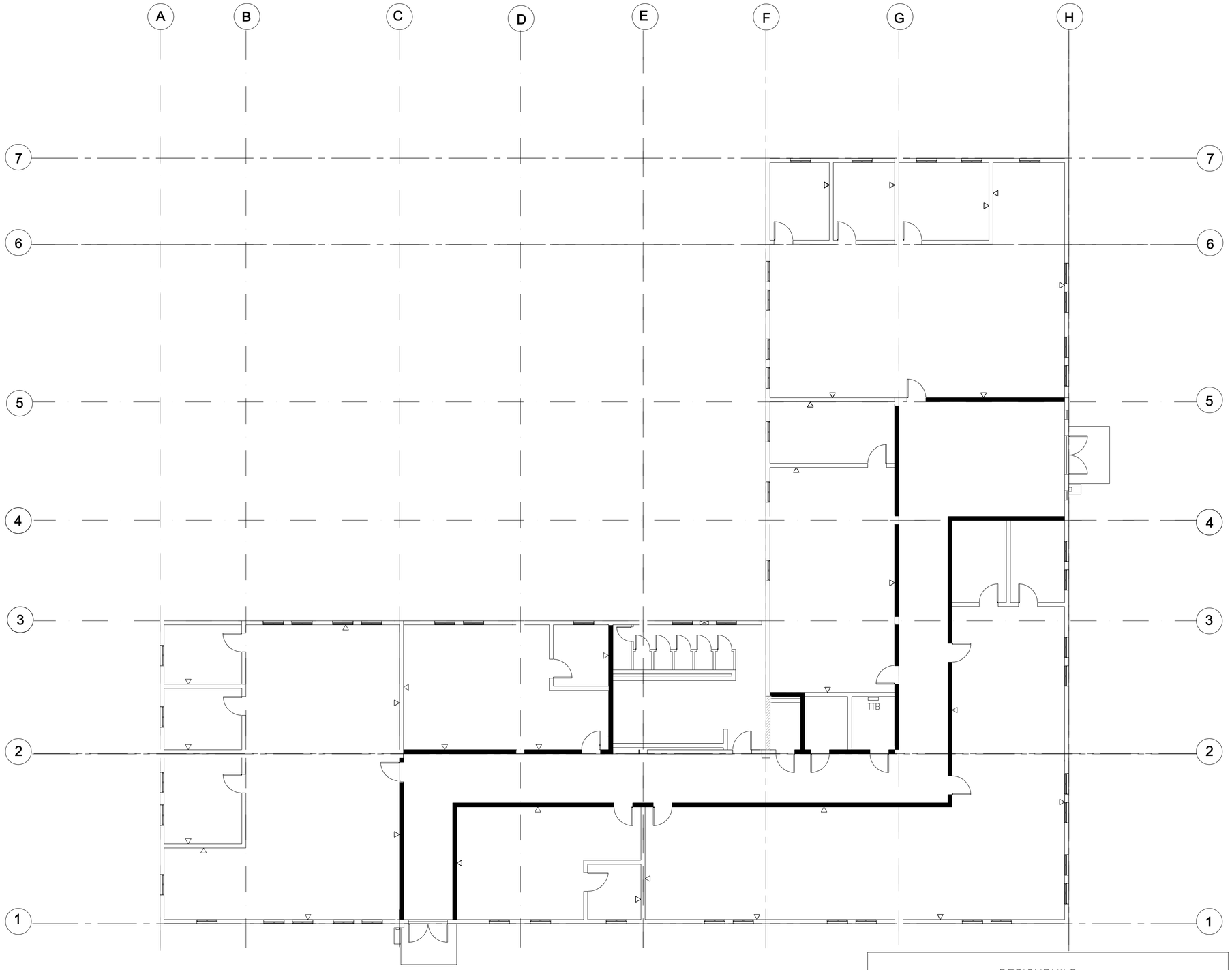

N

DESIGNBUILD

1. SEE MECHANICAL DRAWINGS FOR DESIGN BUILD REQUIREMENTS USING DIESEL HEATING AND EVAPORATIVE COOLING IN THIS FACILTY.
2. COORDINATE WITH MECHANICAL DESIGNER AND REVISE ELECTRICAL DESIGN, POWER DISTRIBUTION AND PANEL SCHEDULES TO MEET NEW REQUIREMENTS.

NOTES:

1. SEE SHEETS CO-E-01 FOR SYMBOLS, ABBREVIATIONS GENERAL NOTES.
2. SEE SHEETS CO-E-03 TO CO-E-05 FOR STANDARD DETAILS.
3. SEE SHEET GQ-E-01 AND GQ-E-02 FOR PANEL SCHEDULES AND RISER DIAGRAMS FOR POWER SYSTEM.

1 | COMMUNICATION PLAN
GQ-E-06 | SCALE: 1:100

1 0 1 2 3 4 5 6 7 8 9
1:100 DRAWING NOT TO SCALE

SYMBOL	DESCRIPTION	DATE	APR

DESIGNED BY: XXX
DATE: 06-27-07
DWN BY: XXX
SUBMITTED BY: R. GREWAL CHIEF, PDT BLDG SYSTEMS
CHK BY: XXX
FILE NO.: AF0707PF-GQ-E-06

US Army Corps of Engineers Transatlantic Programs Center

ANA REGIONAL BRIGADE
PAKTIKA, AFGHANISTAN

GARRISON HQ BUILDING

COMMUNICATION PLAN

SHEET REFERENCE NUMBER:
PF
GQ-E-06

$(getvar, "dwgprefix")$(getvar, "dwgname")$(edtime, 0, MON DD",". YYYY - H:MMam/pm)

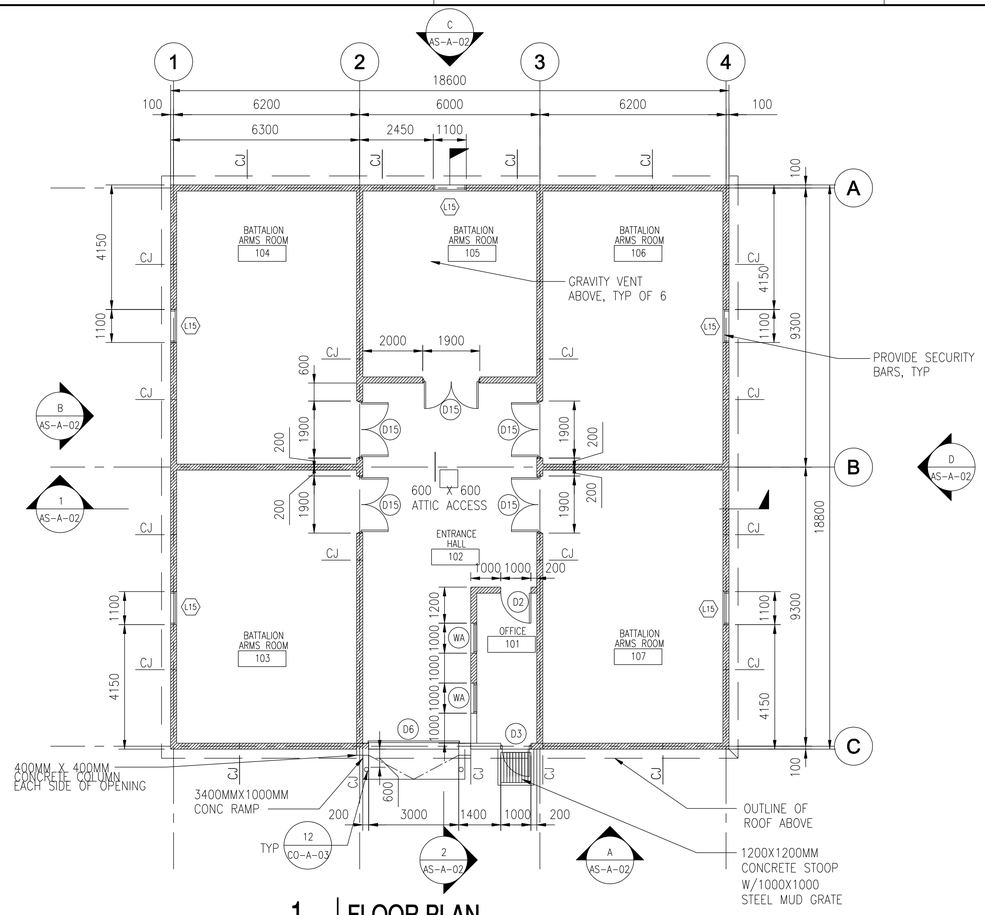

1 FLOOR PLAN

AS-A-01 SCALE: 1:100

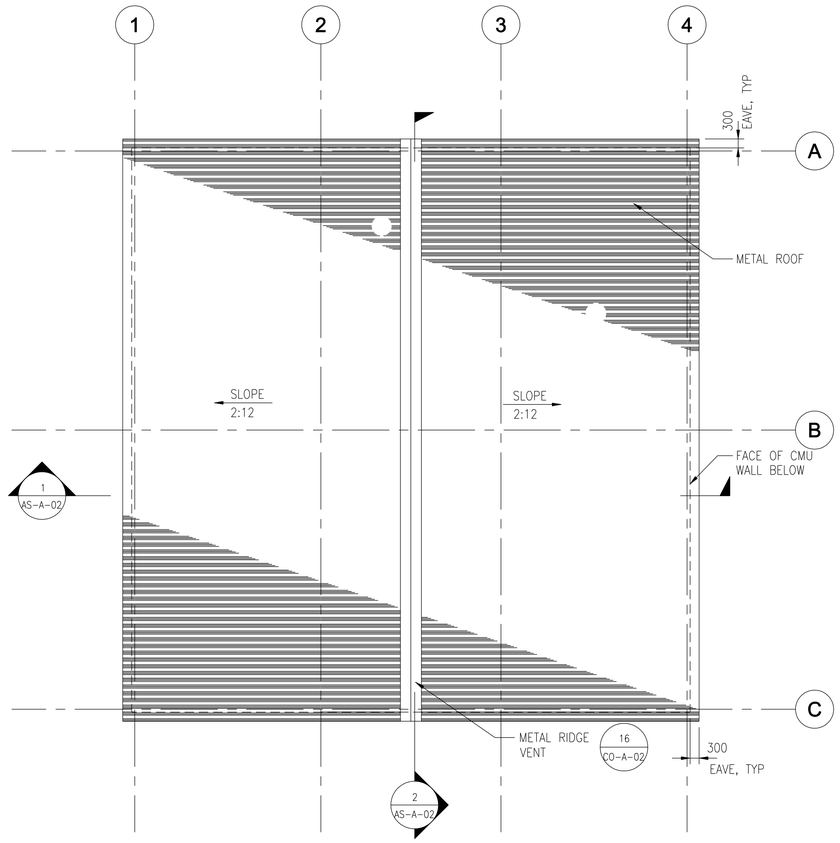

2 ROOF PLAN

AS-A-01 SCALE: 1:100

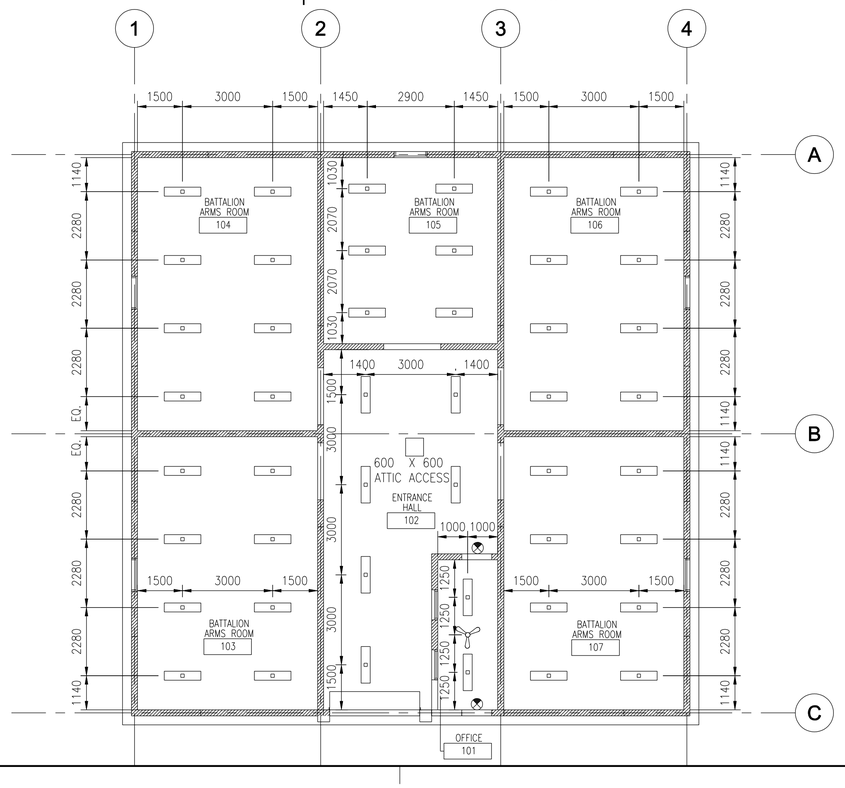

3 REFLECTED CEILING PLAN

AS-A-01 SCALE: 1:100

FINISHING SCHEDULE LEGEND

FLOOR

F1	SEALED CONCRETE
F2	TERRAZZO TILE

WALL

W1	WHITE PAINTED PLASTER

CEILING

C1	GYPSUM BOARD – PAINTED
C2	EXPOSED STRUCTURE – PAINTED
C3	WHITE PAINTED PLASTER

WALL SYMBOLS:

CMU WALL

CJ CMU CONTROL JOINT

FINISHING SCHEDULE

Room No.	Usage	Floor	Wall	Ceiling
101	OFFICE	F2	W1	C1
102	ENTRANCE HALL	F1	W1	C2
103	BATTALION ARMS ROOM	F1	W1	C2
104	BATTALION ARMS ROOM	F1	W1	C2
105	BATTALION ARMS ROOM	F1	W1	C2
106	BATTALION ARMS ROOM	F1	W1	C2
107	BATTALION ARMS ROOM	F1	W1	C2

NOTES:

1– ALL WALLS ARE 200MM CMU UNLESS NOTED OTHERWISE.

2– ALL INTERIOR WALLS TERMINATE AT CEILING UNLESS NOTED OTHERWISE REF. STRUCT. DWGS.

3– ALL DOOR JAMBS ARE 200MM UNLESS NOTED OTHERWISE.

4– ALL DIMENSIONS ARE TO FACE OF CMU UNLESS NOTED OTHERWISE.

5– ALL VERTICAL DIMENSIONS & LEVELS ARE FROM GROUND FLOOR FINISHED SLAB. THIS ELEVATION IS +0000.

6– SEE DRAWING CO-A-05 & CO-A-06 FOR OPENING SCHEDULE & TYPES.

7– SEE DRAWING CO-A-02, CO-A-03 & CO-A-04 FOR STANDARD DETAILS.

8– SEE STRUCTURAL DRAWINGS FOR LOCATION OF BUILDING CONTROL, EXPANSION AND SEISMIC JOINTS.

9– TOTAL AREA OF BUILDING 349.7 M2.

1 0 1 2 3 4 5 6 7 8 9
1:100

SYMBOL	DESCRIPTION	DATE	APR

DESIGNED BY: YSK
DWN BY: JSG
CHK BY: PLD
DATE: 06-27-07
SUBMITTED BY: CHIEF, PANEL 10 DEV PROJ FACILITIES
FILE NO.: AF0707 PG-AS-A-01

US Army Corps of Engineers Transatlantic Programs Center

ANA REGIONAL BRIGADE
PAKTIKA, AFGHANISTAN

ARMS STORAGE BUILDING
FLOOR, ROOF AND
REFLECTED CEILING PLANS

SHEET REFERENCE NUMBER:
PG
AS-A-01

$(getvar, "dwgprefix")$(getvar, "dwgname")$(edtime, O, MON DD", YYYY – H:MMam/pm)

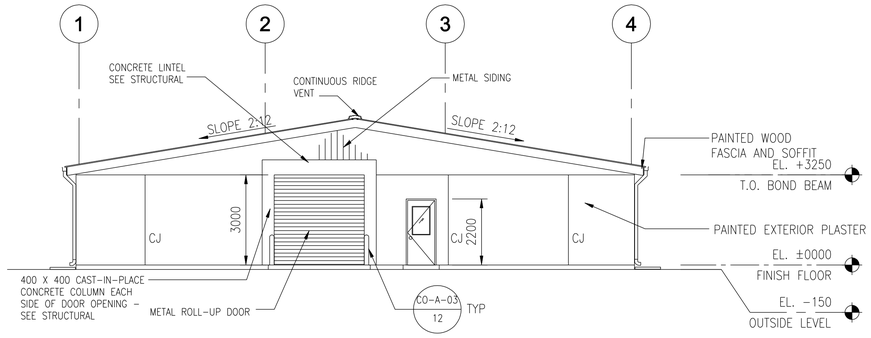

A FRONT ELEVATION

AS-A-02 SCALE: 1:100

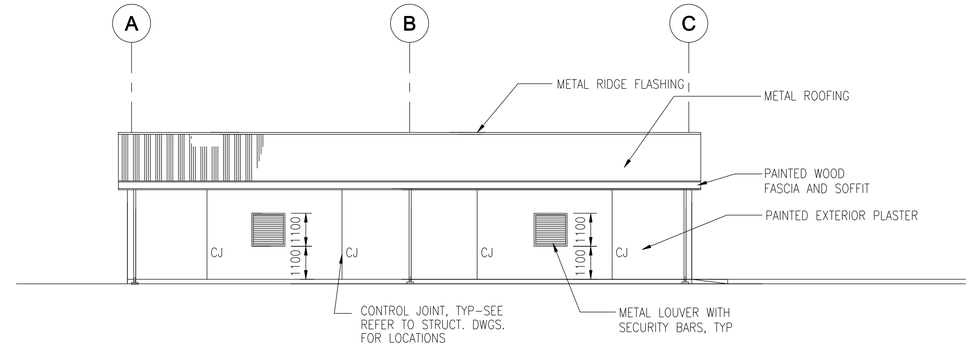

B SIDE ELEVATION

AS-A-02 SCALE: 1:100

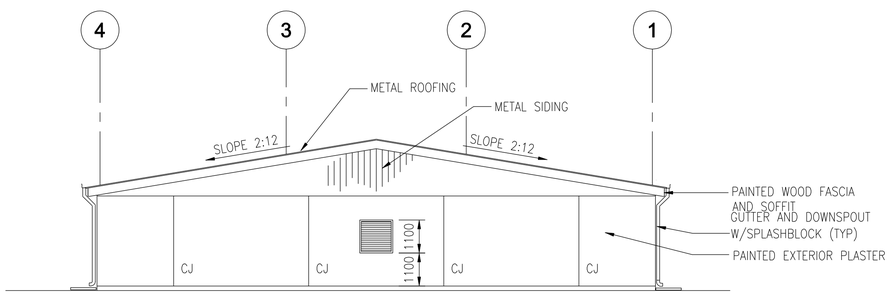

C REAR ELEVATION

AS-A-02 SCALE: 1:100

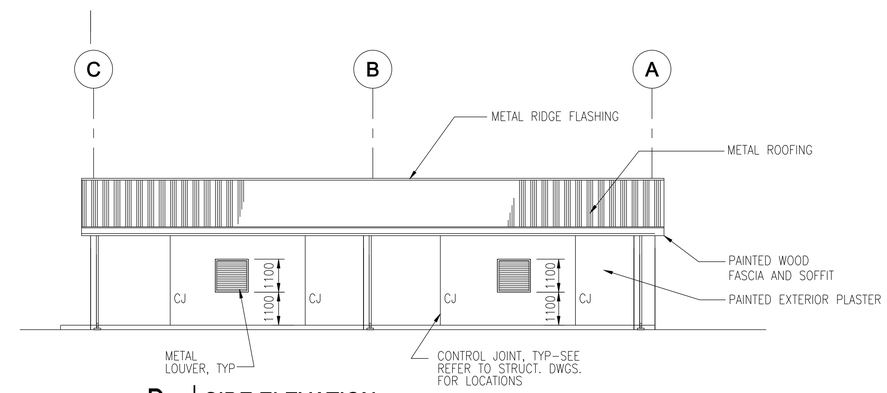

D SIDE ELEVATION

AS-A-02 SCALE: 1:100

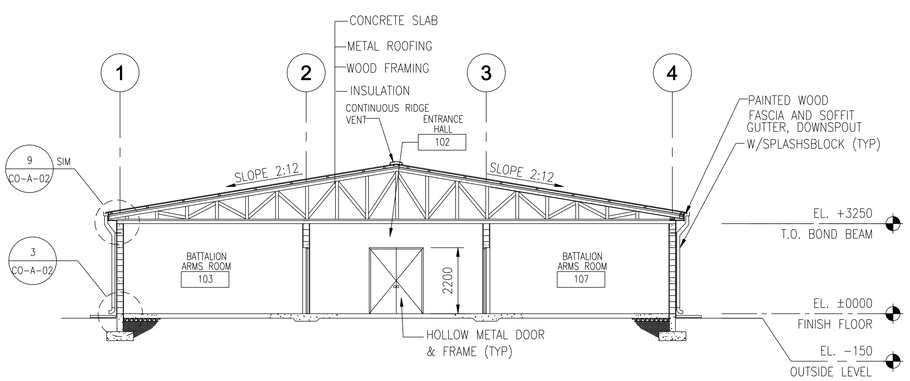

1 BUILDING SECTION

AS-A-02 SCALE: 1:100

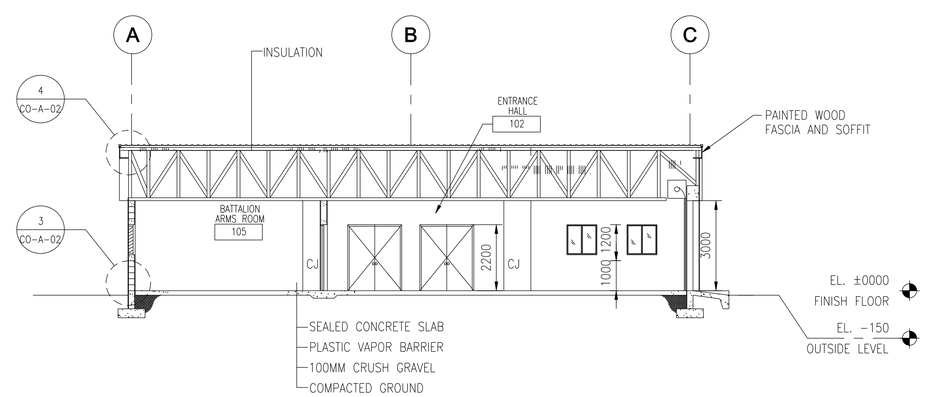

2 BUILDING SECTION

AS-A-02 SCALE: 1:100

1 0 1 2 3 4 5 6 7 8 9
1:100

DRAWING NOT TO SCALE

SYMBOL	DESCRIPTION	DATE	APR

DESIGNED BY: YSK
DATE: 06-27-07
DWN BY: JSG
SUBMITTED BY: CHIEF, PORTFOLIO DEV & FACILITIES
CHK BY: PLD
FILE NO.: AF0707PG-AS-A-02

US Army Corps of Engineers
Transatlantic Programs Center

ANA REGIONAL BRIGADE
PAKTIKA, AFGHANISTAN

ARMS STORAGE BUILDING
EXTERIOR ELEVATIONS
AND BUILDING SECTIONS

SHEET REFERENCE NUMBER:
PG
AS-A-02

$(getvar, "dwgprefix")$(getvar, "dwgname")$(edtime, 0, MON DD"", YYYY - H:MMam/pm)

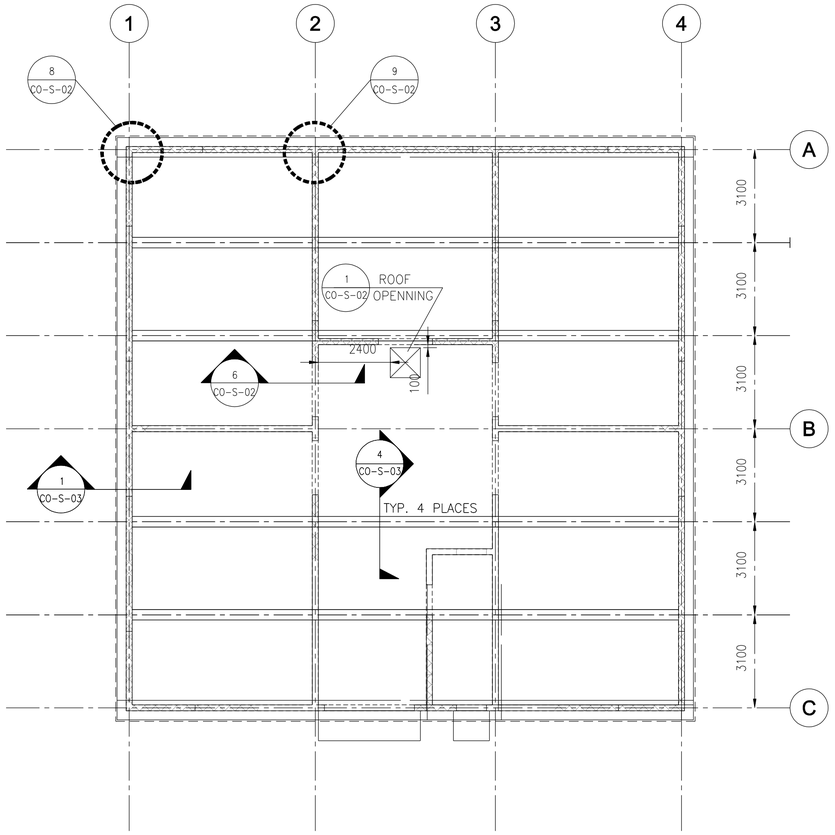

2 | ROOF FRAMING PLAN

AS-S-01 SCALE: 1:100

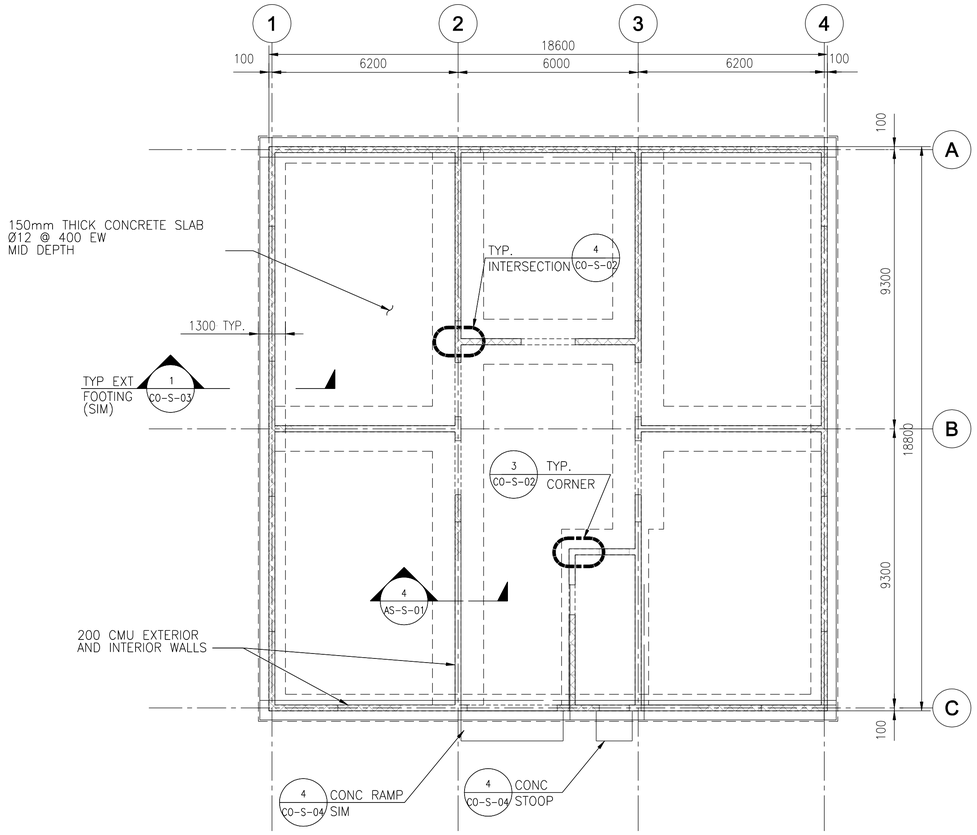

1 | FOUNDATION PLAN

AS-S-01 SCALE: 1:100

FOUNDATIONS ARE DESIGNED USING AN ALLOWABLE BEARING PRESSURE OF 0.75 KG/SQ. CM (1500 PSF), AND BOTTOM OF FOOTINGS ARE PLACED AS SHOWN ON DRAWINGS. GEOTECHNICAL INVESTIGATION SHALL CONFIRM BEARING CAPACITY TO BE NO LESS THAN 0.75 KG/SQ CM. IF GEOTECHNICAL INVESTIGATION SHOWS LESS THAN 0.75 KG/SQ CM THE CONTRACTOR SHALL REDESIGN FOOTINGS BASED ON THE GEOTECHNICAL INVESTIGATION. SEE SPECIFICAITON PARAGRAPH, GEOTECHNICAL, FOUNDATION AND SURVEY.

1 0 1 2 3 4 5 6 7 8 9
1:100

SYMBOL	DESCRIPTION	DATE	APR

DESIGNED BY: TCP
DWN BY: TCP
CHK BY: KGO
DATE: 06-27-07
SUBMITTED BY: CHIEF, PANELLO PROJECTS DEV
FILE NO.: AF0707 PG-AS-S-01

US Army Corps of Engineers
Transatlantic Programs Center

ANA REGIONAL BRIGADE
PAKTIKA, AFGHANISTAN

ARMS STORAGE BUILDING
FOUNDATION AND ROOF FRAMING PLAN

SHEET REFERENCE NUMBER:
PG
AS-S-01

$(getvar, "dwgprefix")$(getvar, "dwgname")$(edtime, 0, MON DD"", YYYY - H:MMam/pm)

NOTES:

1. FOR STANDARD DETAILS SEE DWG. No. (CO-M-01, 02, 03 & 04).
2. FOR CONTROL DIAGRAMS SEE DWG. No. (CO-M-05).
3. FOR LEGEND AND ABBREVIATION SEE DWG. No. (CO-M-06).
4. GRAVITY VENTILATORS SHALL BE 300mm NECK DIAMETER TURBINE VENTILATORS EQUAL TO PENN VENTILATION ALUMINUM CONSTRUCTION PROVIDE PENN VENTILATION ADJUSTABLE BASE REFER TO ARCHITECTURAL DRAWINGS FOR ROOF DETAILS

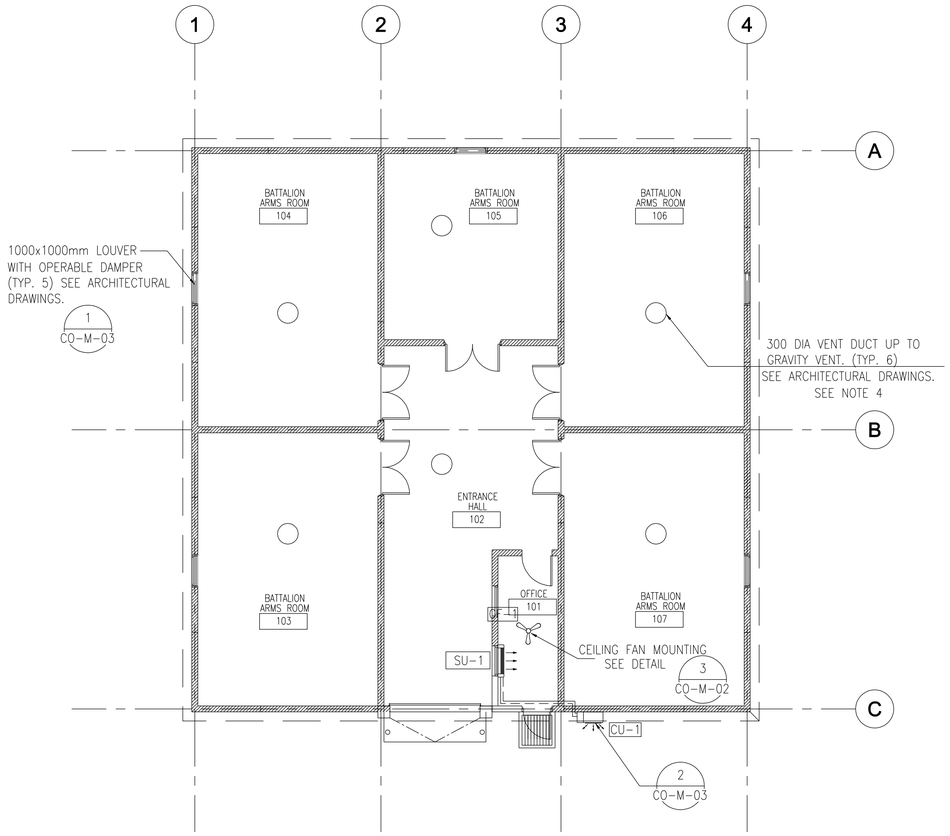

1 MECHANICAL FLOOR PLAN
AS-M-01 SCALE: 1:100

SPLIT SYSTEM AIR CONDITIONING HEAT PUMP SCHEDULE (SU/CU)

UNIT NO.	CAPACITY * (KW)		AIR QUANTITY CMH	ELECTRICAL DATA				REMARKS
	COOLING	HEATING		KW	VOLTS	PH	HZ	
SU-1 CU-1	1.6	2.7	615	2.2	220	1	50	HIGH WALL MOUNTED INDOOR UNIT (1)

* MINIMUM EQUIPMENT CAPACITY AS RATED AT 36 °C DB/16.7 °C WB (SUMMER OUTDOOR TEMPERATURE)
AT -12.8 °C DB (WINTER OUTDOOR TEMPERATURE)
AT 2133 M ELEVATION

(1) PROVIDE AUXILIARY ELECTRIC HEATING COIL IN THE INDOOR UNIT TO SUPPLEMENT HEAT PUMP CAPACITY OR TO MEET LOW AMBIENT OPERATIONS IN WINTER.

CEILING FAN SCHEDULE (CF)

UNIT NUMBER	TYPE (NOTE 1)	FAN DIAMETER	MAX WATTS	ELECTRICAL DATA			REMARKS
				VOLTS	PHASE	HERTZ	
CF-1	A	900 mm (35 in)	65	220	1	50	3-SPEED

NOTES:-
1- (A) WITHOUT LIGHT FIXTURE
2- BOTTOM OF FAN MOUNTING HEIGHT = MINIMUM 2500mm A.F.F
3- PROVIDE WITH REMOTE WALL MOUNTED, ON-OFF SWITCH LOCATED ON ELECTRICAL DRAWINGS.

1 0 1 2 3 4 5 6 7 8 9
1:100 DRAWING NOT TO SCALE

SYMBOL	DESCRIPTION	DATE	APR

DESIGNED BY: XXX
DATE: 06-27-07
DWN BY: XXX
SUBMITTED BY: R. CREWAL Chief, PD-T Bldg Systems
CHK BY: XXX
FILE NO.: AF0707PG-AS-M-01

US Army Corps of Engineers Transatlantic Programs Center

ANA REGIONAL BRIGADE
PAKTIKA, AFGHANISTAN
ARMS STORAGE BUILDING
MECHANICAL FLOOR PLAN AND SCHEDULES

SHEET REFERENCE NUMBER:
PG
AS-M-01

$(getvar, "dwgprefix")$(getvar, "dwgname")$(edtime, 0, MON DD", YYYY - HHMMam/pm)

ARMS STORAGE PANEL PP

AIC: 25KA

40AT/100AF MCB
MLO

VOLTAGE 380/220V, 3PH, 5W, 50HZ

FEED BOTTOM
MOUNTING FLUSH
LOCATION RM 102

DESCRIPTION	LOAD (VA) A	B	C	AMP	POLE	CKT	A B C	CKT	POLE	AMP	LOAD (VA) A	B	C	DESCRIPTION
RM 106,107 LTG	1600			20	1	1		2	1	20	1200			RM 101,102,106,107 RECP
RM 103,104,105 LTG		2200		20	1	3		4	1	20				SPARE
RM 103,104,105 RECP			1400	20	1	5		6	1	20			100	RM 101 FAN (CF-1)
CU-1/SU-1	2750			20	1	7		8	1	20				SPARE
SPARE				20	1	9		10	1	20		600		FOR FUTURE SELF SMOKE DETECTOR
SPARE				20	1	11		12	1	20			940	RM 101,102 LTG
TTC RECEP	180			20	1	13		14	1	20	180			TTC RECEP
SPARE				20	1	15		16	1	20				SPARE
SPACE					1	17		18	1					SPACE
SUB-TOTALS=	4530	2200	1400								1380	600	1040	= SUB-TOTALS

	V A	AMPS
TOTAL PHASE A=	5910	26.86
TOTAL PHASE B=	2800	12.72
TOTAL PHASE C=	2440	11.09
TOTAL CONNECTED LOAD	11.15	KVA
DEMAND FACTOR	1	
DEMAND LOAD	11.15	KVA
20% FUTURE LOAD	2.23	KVA
TOTAL LOAD	13.38	KVA
TOTAL AMPERE	20.35	AMP

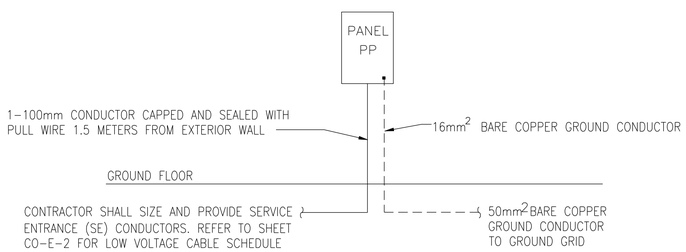

1 POWER RISER DIAGRAM
AS-E-01 SCALE: N.T.S.

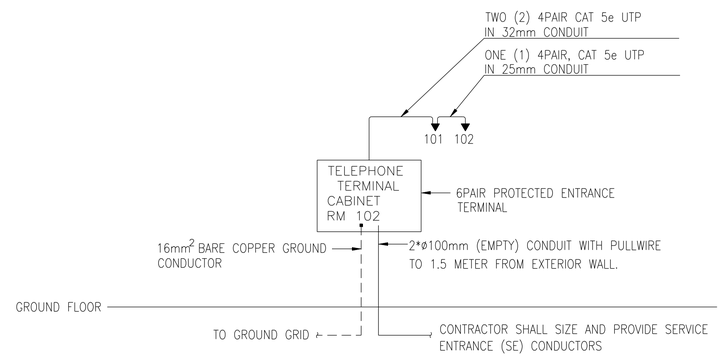

2 TELEPHONE RISER DIAGRAM
AS-E-01 SCALE: N.T.S.

NOTE:

1. SEE SHEET CO-E-01 AND CO-E-02 FOR SYMBOLS, ABBREVIATIONS AND GENERAL NOTES.

DRAWING NOT TO SCALE

SYMBOL	DESCRIPTION	DATE	APR

DESIGNED BY: XXX
DWN BY: XXX
CHK BY: XXX
DATE: 06-27-07
SUBMITTED BY: R. GREWAL, CHIEF, DIV. BLDG SYSTEMS
FILE NO.: AF0707PG-AS-E-01

US Army Corps of Engineers
Transatlantic Programs Center

ANA REGIONAL BRIGADE
PAKTIKA, AFGHANISTAN

ARMS STORAGE BUILDING
PANEL SCHEDULE AND RISER DIAGRAMS

SHEET REFERENCE NUMBER:
PG
AS-E-01

$(getvar, "dwgprefix")$(getvar, "dwgname")$(edtime, 0, MON DD",", YYYY - H:MMam/pm)

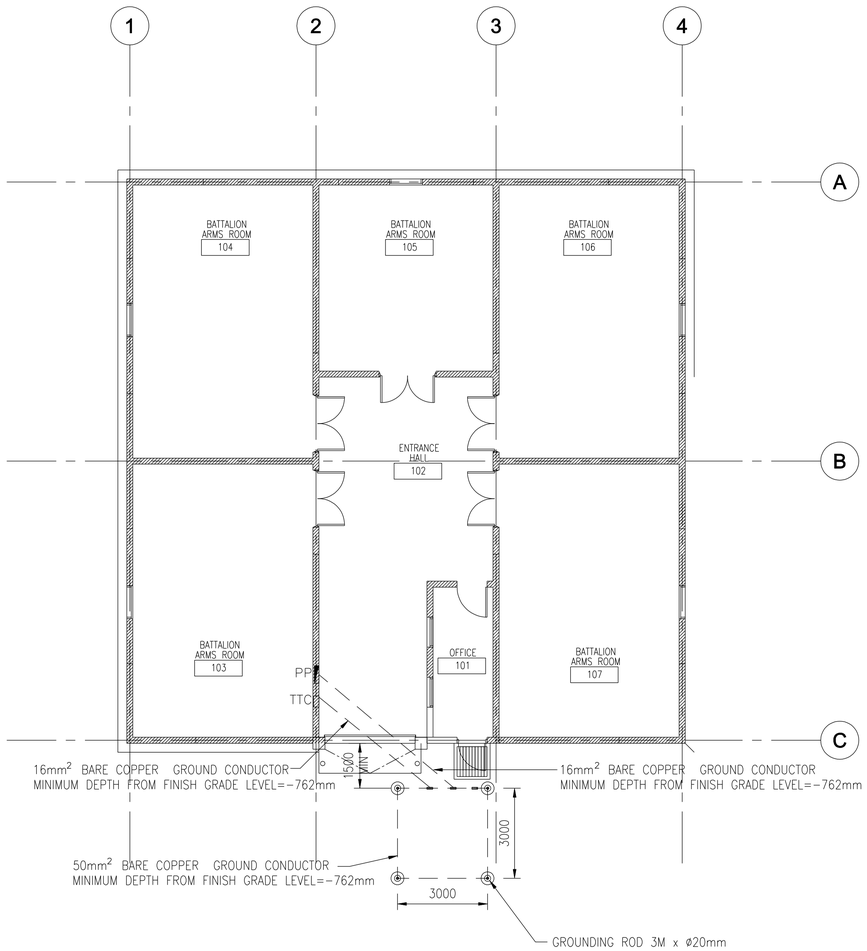

1 GROUNDING PLAN
AS-E-02 SCALE: 1:100

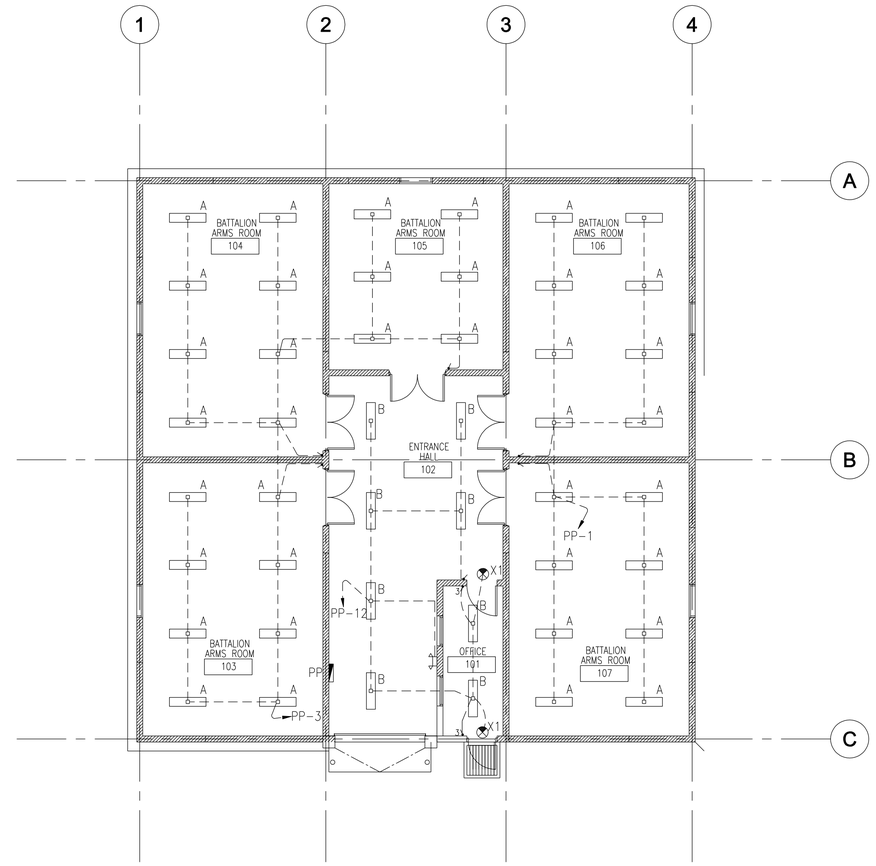

2 LIGHTING PLAN
AS-E-02 SCALE: 1:100

NOTES:

1. SEE SHEET CO-E-01 AND CO-E-02 FOR SYMBOLS,ABBREVIATIONS, GENERAL NOTES AND LIGHTING FIXTURE SCHEDULE.
2. SEE SHEET CO-E-03 TO CO-E-05 FOR STANDARD DETAILS.
3. SEE SHEET AS-E-01 FOR PANEL SCHEDULES AND RISER DIAGRAMS FOR POWER SYSTEM.

1 0 1 2 3 4 5 6 7 8 9
1:100
DRAWING NOT TO SCALE

SYMBOL	DESCRIPTION	DATE	APR

DESIGNED BY: XXX
DWN BY: XXX
CHK BY: XXX
DATE: 06-27-07
SUBMITTED BY: R. CREWAL CHIEF, PDT BLDG SYSTEMS
FILE NO.: AF0707PG-AS-E-02

US Army Corps of Engineers Transatlantic Programs Center

ANA REGIONAL BRIGADE
PAKTIKA, AFGHANISTAN

ARMS STORAGE BUILDING
GROUNDING AND LIGHTING PLANS

SHEET REFERENCE NUMBER:
PG
AS-E-02

$(getvar, "dwgprefix")$(getvar, "dwgname")$(edtime, 0, MON DD"", YYYY - H:MMam/pm)

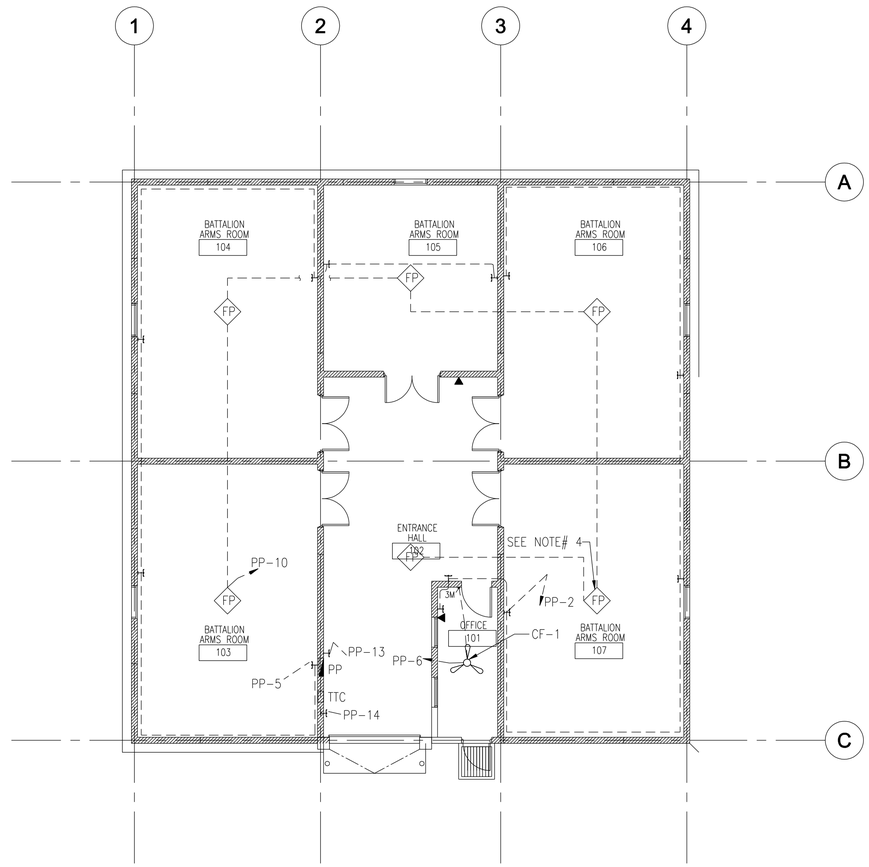

1 POWER AND COMMUNICATION PLAN

AS-E-03 SCALE: 1:100

NOTES:

1. SEE SHEET CO-E-01AND CO-E-02 FOR SYMBOLS, ABBREVIATIONS AND GENERAL NOTES
2. SEE SHEET CO-E-03 TO CO-E-05 FOR STANDARD DETAILS.
3. SEE SHEET AS-E-01 FOR PANEL SCHEDULES, AND RISER DIAGRAMS FOR POWER AND TELEPHONE SYSTEM.
4. PROVIDE FIRE ALARM PULL BOXES,CONDUITS AND WIRING FOR FUTURE SELF SMOKE DETECTOR

1 0 1 2 3 4 5 6 7 8 9
1:100 DRAWING NOT TO SCALE

SYMBOL	DESCRIPTION	DATE	APR

DESIGNED BY: XXX
DATE: 06-27-07
DWN. BY: XXX
SUBMITTED BY: R. GREWAL CHIEF, PD BLDG SYSTEMS
CHK. BY: XXX
FILE NO.: AF0707PG-AS-E-03

US Army Corps of Engineers Transatlantic Programs Center

ANA REGIONAL BRIGADE
PAKTIKA, AFGHANISTAN

ARMS STORAGE BUILDING

POWER AND COMMUNICATION PLAN

SHEET REFERENCE NUMBER:
PG
AS-E-03

$(getvar, "dwgprefix")$(getvar, "dwgname")$(edtime, 0, MON DD",". YYYY - HHMMam/pm)

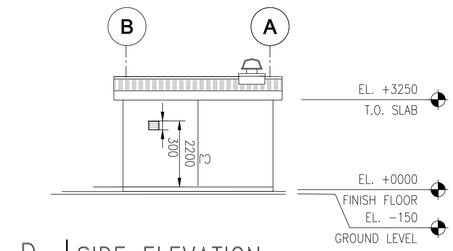

D SIDE ELEVATION
PS-A-01 SCALE: 1:100

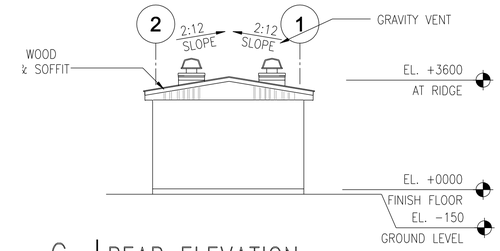

C REAR ELEVATION
PS-A-01 SCALE: 1:100

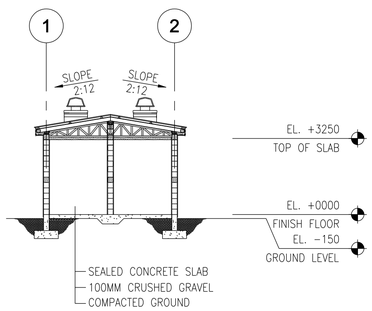

4 CROSS SECTION
PS-A-01 SCALE: 1:100

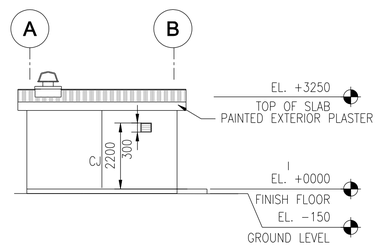

B SIDE ELEVATION
PS-A-01 SCALE: 1:100

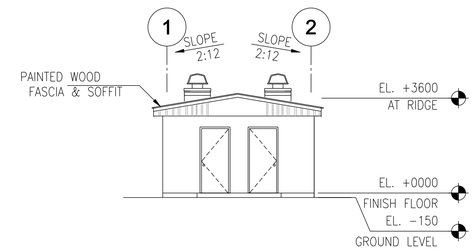

A FRONT ELEVATION
PS-A-01 SCALE: 1:100

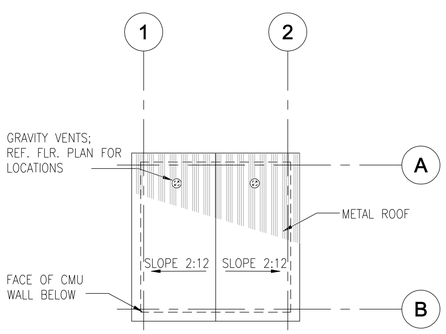

3 ROOF PLAN
PS-A-01 SCALE: 1:100

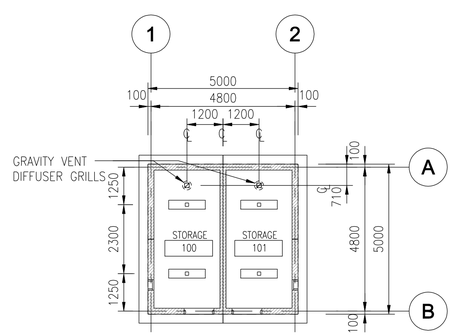

2 REFLECTED CEILING PLAN
PS-A-01 SCALE: 1:100

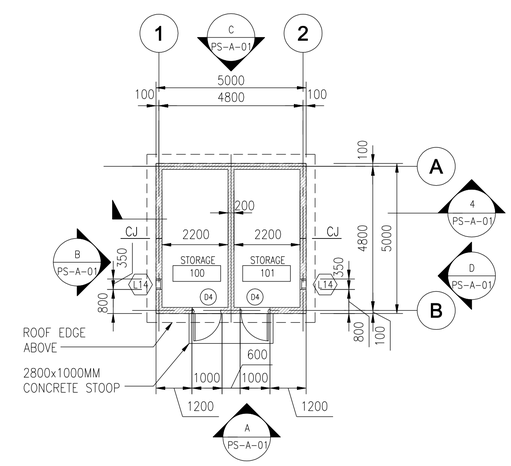

1 FLOOR PLAN
PS-A-01 SCALE: 1:100

FINISHING SCHEDULE LEGEND

FLOOR

F1	SEALED CONCRETE

WALL

W1	WHITE PAINTED PLASTER

CEILING

C2	EXPOSED STRUCTURE - PAINTED

FINISHING SCHEDULE

Room No.	Usage	Floor	Wall	Ceiling
100	STORAGE	F1	W1	C2
101	STORAGE	F1	W1	C2

WALL SYMBOLS:

CMU WALL

CJ CMU CONTROL JOINT

NOTES:

1- ALL WALLS ARE 200MM CMU UNLESS NOTED OTHERWISE

2- ALL INTERIOR WALLS TERMINATE AT CEILING UNLESS NOTED OTHERWISE REF. STRUCT. DWGS.

3- ALL DOOR JAMBS ARE 200MM UNLESS OTHERWISE NOTED .

4- ALL DIMENSIONS ARE TO FACE OF CMU UNLESS NOTED OTHERWISE.

5- ALL VERTICAL DIMENSIONS & LEVELS ARE FROM GROUND FLOOR FINISHED SLAB. THIS ELEVATION IS +0000.

6- SEE DRAWING CO-A-05 & CO-A-06 FOR OPENING SCHEDULE & TYPES.

7- SEE DRAWING CO-A-02, CO-A-03 & CO-A-04 FOR STANDARD DETAILS.

8- SEE STRUCTURAL DRAWINGS FOR LOCATION OF BUILDING CONTROL, EXPANSION AND SEISMIC JOINTS.

9- SEE SHEET CO-E-01 FOR LIGHTING LEGEND.

10-SEE SHEET CO-M-06 FOR HVAC LEGEND.

11-TOTAL AREA OF BUILDING IS 25.0 M2.

1 0 1 2 3 4 5 6 7 8 9
1:100

DRAWING NOT TO SCALE

SYMBOL	DESCRIPTION	DATE	APR

DESIGNED BY: YSK
DATE: 06-27-07
DWN BY: JSG
SUBMITTED BY: CHIEF, PANELLO PROJECTS DEV
CHK BY: PLD
FILE NO.: AF0707 PI-PS-A-01

US Army Corps of Engineers Transatlantic Programs Center

ANA REGIONAL BRIGADE
PAKTIKA, AFGHANISTAN

POL STORAGE BUILDING
POL STORAGE BUILDING
PLANS , SECTION AND ELEVATIONS

SHEET REFERENCE NUMBER:
PI
PS-A-01

$(getvar, "dwgprefix")$(getvar, "dwgname")$(edtime, O, MON DD", YYYY - H:MMam/pm)

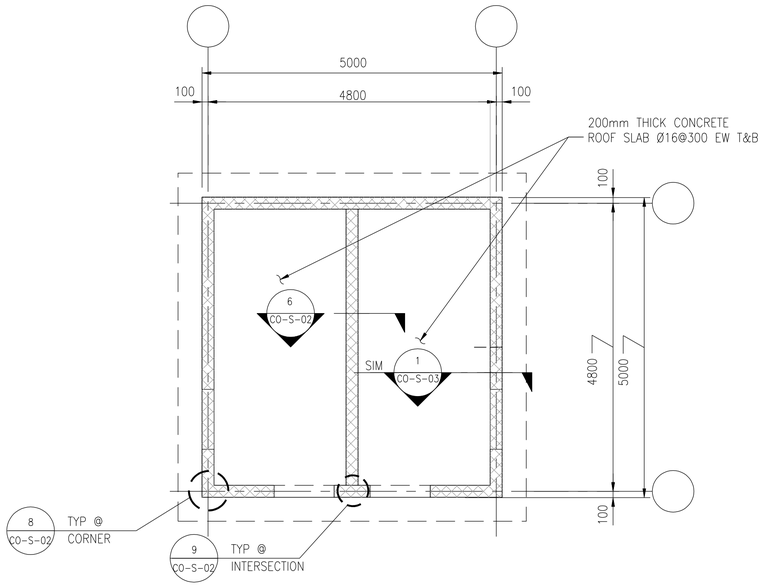

2 ROOF FRAMING PLAN

PS-S-01 SCALE: 1:50

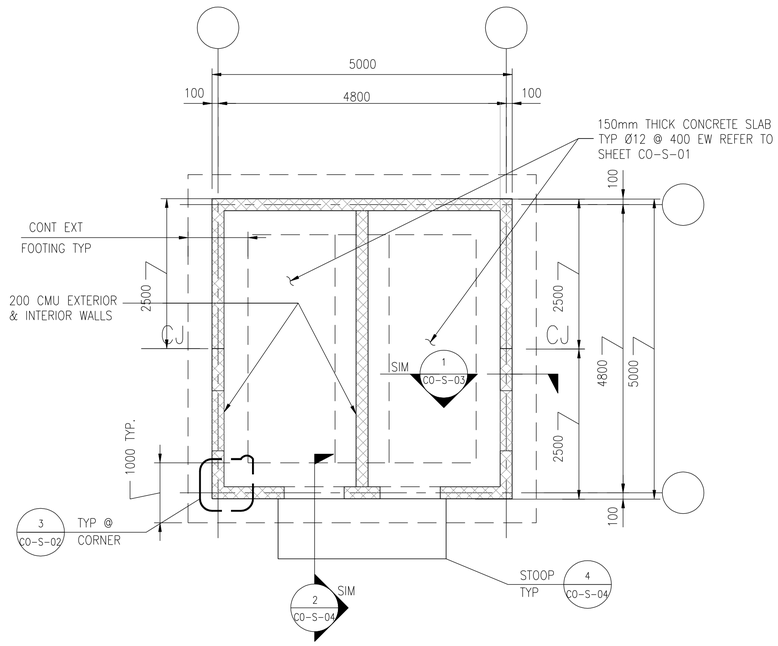

1 FOUNDATION PLAN

PS-S-01 SCALE: 1:50

NOTES:

1. UNLESS OTHERWISE NOTED, LINEAR DIMENSIONS SHOWN ARE IN MILLIMETERS.
2. REINFORCING STEEL BARS ARE DEFORMED HIGH GRADE STEEL BARS OF GRADE 60 (Fy=4200 Kg/cm2).
3. FOR ROOF MECHANICAL OPENINGS, REFER TO MECHANICAL DRAWINGS.

FOUNDATIONS ARE DESIGNED USING AN ALLOWABLE BEARING PRESSURE OF 0.75 KG/SQ. CM (1500 PSF), AND BOTTOM OF FOOTINGS ARE PLACED AS SHOWN ON DRAWINGS. GEOTECHNICAL INVESTIGATION SHALL CONFIRM BEARING CAPACITY TO BE NO LESS THAN 0.75 KG/SQ CM. IF GEOTECHNICAL INVESTIGATION SHOWS LESS THAN 0.75 KG/SQ CM THE CONTRACTOR SHALL REDESIGN FOOTINGS BASED ON THE GEOTECHNICAL INVESTIGATION. SEE SPECIFICAITON 01015 PARAGRAPH, GEOTECHNICAL, FOUNDATION AND SURVEY.

SYMBOL	DESCRIPTION	DATE	APR

DESIGNED BY: TCP
DWN BY: TCP
CHK BY: KGO
DATE: 06-27-07
SUBMITTED BY: PHILIP J. PANELLO CHIEF, FOT FACILITIES DEV
FILE NO.: AF0707PI-PS-S-01

US Army Corps of Engineers Transatlantic Programs Center

ANA REGIONAL BRIGADE
PAKTIKA, AFGHANISTAN

POL STORAGE BUILDING

FOUNDATION &ROOF FRAMING PLANS

SHEET REFERENCE NUMBER:
PI
PS-S-01

1 0 1 2 3 4
1:50

$(getvar, "dwgprefix")$(getvar, "dwgname")$(edtime, 0, MON DD", YYYY - HHMMam/pm)

NOTES:

1. INTAKE AIR LOUVER WITH OPERABLE DAMPER AND WASHABLE FILTER AND FILTER RACK.
2. DUCTWORK IN THIS BUILDING SHALL BE FABRICATED FROM STAINLESS STEEL.
3. EXHAUST REGISTER IN THIS BUILDING SHALL BE FABRICATED FROM STAINLESS STEEL.
4. FOR STANDARD DETAILS SEE DWG. No. (CO-M-01, 02, 03 & 04).
5. FOR CONTROL DIAGRAMS SEE DWG. No. (CO-M-05).
6. FOR LEGEND AND ABBREVIATION SEE DWG. No. (CO-M-06).

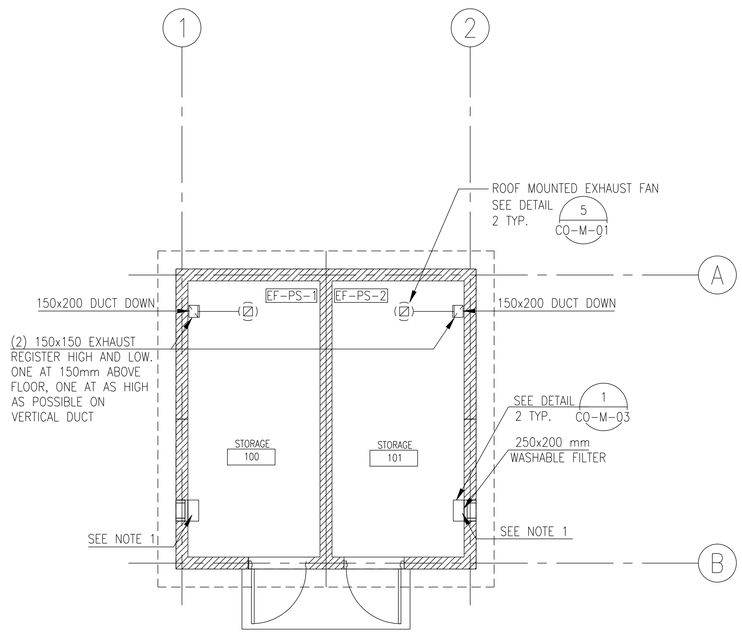

1 MECHANICAL FLOOR PLAN
PS-M-01
SCALE: 1:50

EXHAUST FAN SCHEDULE (EF)

UNIT NUMBER	SERVICE	TYPE	AIR QUANTITY		MINIMUM WHEEL DIAMETER		FAN	STATIC PRESSURE		ELECTRICAL DATA				INTERLOCK WITH	DRIVE TYPE	TEMP. CONTROL DIAGRAM	REMARKS
			CMH	CFM	MM	INCHES	RPM	mmH20	IN W.G.	H.P.	VOLTS	PHASE	HERTZ				
EF-PS-01	STORAGE 100	R-CTFG-EP	170	100	-	-	1750	7.6	0.3	0.25	380	3	50	-	DIRECT	E-5	NOTE 1,2,3
EF-PS-02	STORAGE 101	R-CTFG-EP	170	100	-	-	1750	7.6	0.3	0.25	380	3	50	-	DIRECT	E-5	NOTE 1,2,3

MANUFACTURER SHALL PROVIDE NECESSARY TRANSFORMERS ON ALL UNITS TO MEET ELECTRICAL REQUIREMENT.

NOTES:

NOTE 1. SUPPLIED WITH BACKDRAFT DAMPER

NOTE 2. ALL EXHAUST FANS WITH SINGLE PHASE POWER ARE TO BE PROVIDED WITH A FACTORY MOUNTED DISCONNECT SWITCH.

NOTE 3. FANS SHALL BE AMCA OR VDMA TYPE "B" SPARK RESISTANT CONSTRUCTION. FAN MOTOR SHALL BE EXPLOSION PROOF.

FAN SCHEDULE TYPE - LEGEND
(REF. EXHAUST AND SUPPLY FAN SCHEDULES)
R-CTFG-GP

R = ROOF
W = WALL
IL = INLINE
CL = CEILING

GP = GENERAL PURPOSE
EP = EXPLOSION PROOF
DB = DOWN BLAST
UB = UP BLAST
UT = UTILITY SET

CTFG = CENTRIFUGAL
PROP = PROPELLER
TUBA = TUBE AXIAL

1 0 1 2 3 4
1:50

DRAWING NOT TO SCALE

SYMBOL	DESCRIPTION	DATE	APR

DESIGNED BY: XXX
DWN BY: XXX
CHK BY: XXX
DATE: 06-27-07
SUBMITTED BY: R. CREWAL CHIEF, PDT BLDG SYSTEMS
FILE NO.: AF0707 PI-PS-M-01

ANA REGIONAL BRIGADE
PAKTIKA, AFGHANISTAN

POL STORAGE BUILDING
MECHANICAL FLOOR PLAN AND SCHEDULES

SHEET REFERENCE NUMBER:
PI
PS-M-01
1 1

$(getvar, "dwgprefix")$(getvar, "dwgname")$(edtime, 0, MON DD"", YYYY - H:MMam/pm)

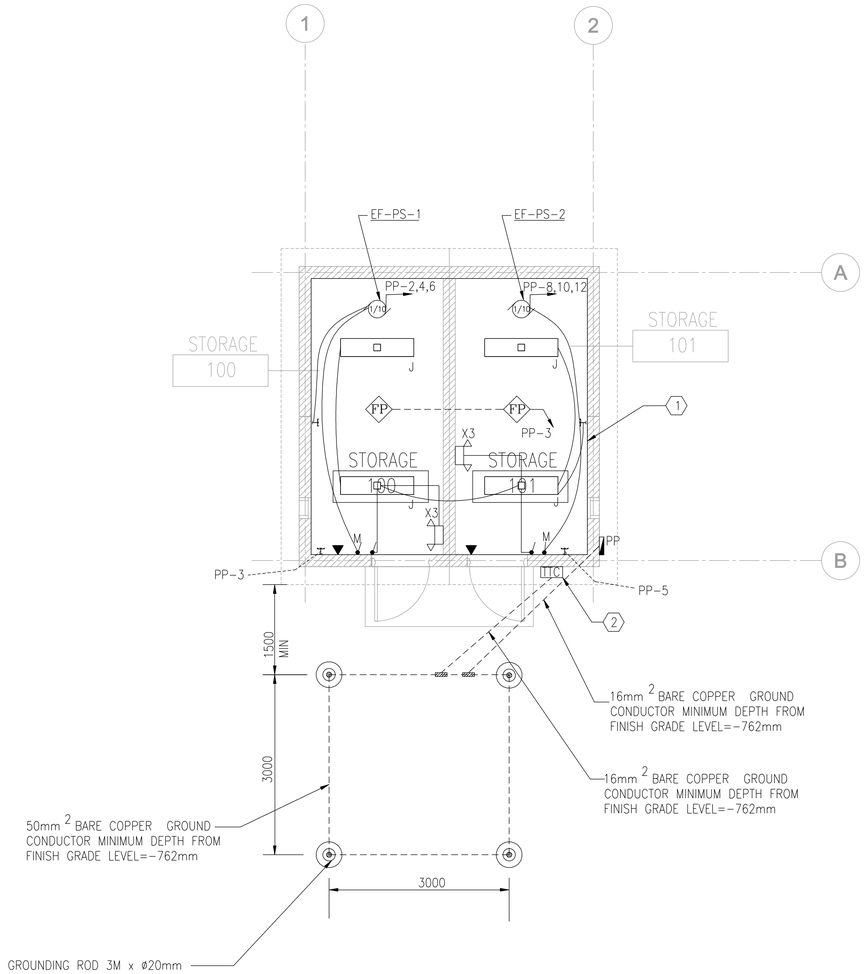

3 LIGHTING, POWER AND COMMUNICATION PLAN

PS-E-01 SCALE: 1:50

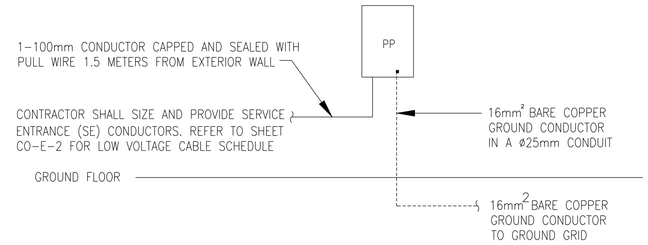

1 POWER RISER DIAGRAM

PS-E-01 SCALE: N.T.S.

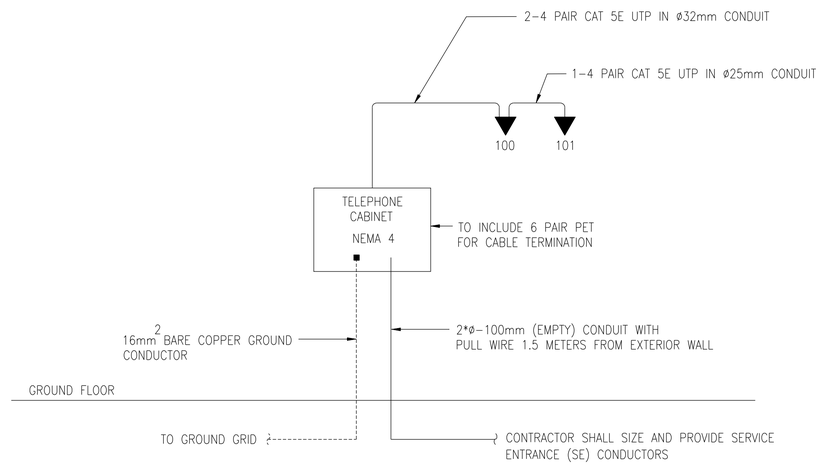

2 TELEPHONE RISER DIAGRAM

PS-E-01 SCALE: N.T.S.

POL STORGE PANEL PP

AIC: 25KA

35AT/100AF MCB

MLO

VOLTAGE 380/220V, 3PH, 5W, 50HZ

FEED

MOUNTING

LOCATION

BOTTOM

SURFACE

OUTSIDE POL STORGE NEMA 3R ENCLOSURE

SPARE

DESCRIPTION	LOAD (VA) A	B	C	AMP	POLE	CKT	A	B	C	CKT	POLE	AMP	LOAD (VA) A	B	C	DESCRIPTION
RECEPS	760			20	1	1				2			85			
FOR FUTURE SELF SMOKE DETECTORS		200		20	1	3				4	3	20		85		EF-PS-01
TTC RECEP			180	20	1	5				6					85	
TTC RECEP	180			20	1	7				8			85			
SPARE				20	1	9				10	3	20		85		EF-PS-02
SPARE				20	1	11				12					85	
SUB-TOTALS=	940	200	180										170	170	170	= SUB-TOTALS

	V A	AMPS
TOTAL PHASE A=	1110	5.05
TOTAL PHASE B=	370	1.68
TOTAL PHASE C=	350	1.59
TOTAL CONNECTED LOAD	1.83	KVA
DEMAND FACTOR	1.0	
DEMAND LOAD	1.83	KVA
20% FUTURE LOAD	0.366	KVA
TOTAL LOAD	2.196	KVA
TOTAL AMPERE	3.34	AMP

KEY NOTE:

1. ALL ELECTRICAL EQUIPMENT AND INSTALLATION WITHIN THIS BOUNDARY SHOWN SHALL BE LISTED FOR AND COMPLY WITH NEC CLASS II DIVISION II REQUIREMENTS.
2. TELEPHONE CABINET SHALL HAVE A NEMA 3R ENCLOSURE

NOTES:

1. SEE SHEETS CO-E-01 AND CO-E-02 FOR SYMBOLS, ABBREVIATIONS, AND GENERAL NOTES

   SEE SHEETS CO-E-03 TO CO-E-05 FOR STANDARD DETAILS

3. PROVIDE FIRE ALARM PULL BOXES,CONDUITS AND WIRING FOR FUTURE SELF SMOKE DETECTOR

1 0 1 2 3 4
1:50
DRAWING NOT TO SCALE

SYMBOL	DESCRIPTION	DATE	APR

DESIGNED BY: XXX
DWN BY: XXX
CHK BY: XXX
DATE: 06-27-07
SUBMITTED BY: R. CREWAL CHIEF, PDT BLDG SYSTEMS
FILE NO.: AF0707PI-PS-E-01

US Army Corps of Engineers Transatlantic Programs Center

ANA REGIONAL BRIGADE
PAKTIKA, AFGHANISTAN

POL STORAGE BUILDING

ELECTRICAL SYSTEMS

SHEET REFERENCE NUMBER:
PI
PS-E-01

$(getvar, "dwgprefix")$(getvar, "dwgname")$(edtime, 0, MON DD"," YYYY - HHMMam/pm)

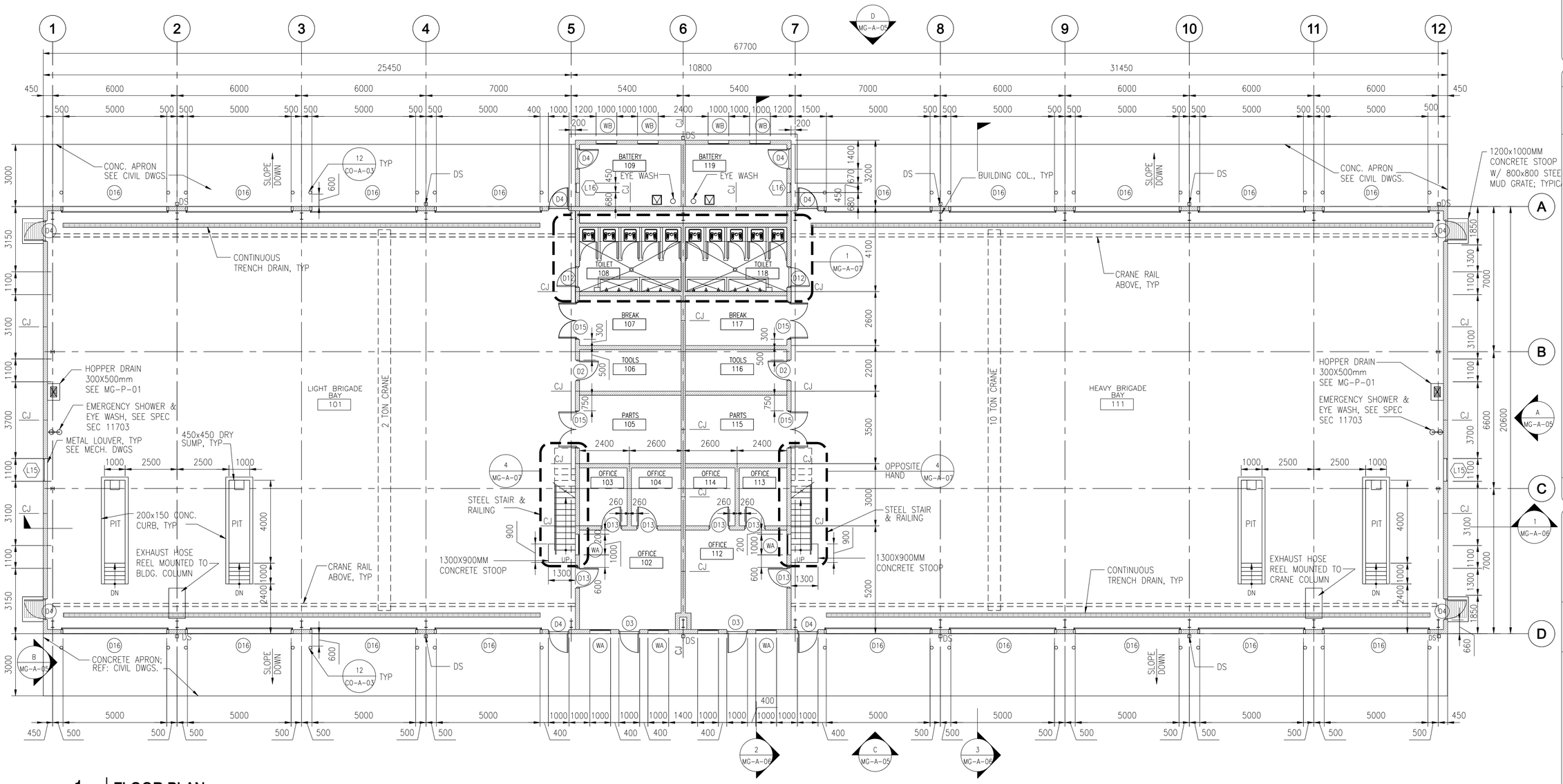

1 FLOOR PLAN

MG-A-01 SCALE: 1:100

FINISHING SCHEDULE LEGEND

FLOOR

F1	SEALED CONCRETE
F2	300MMX300MM TERRAZZO TILE
F3	CERAMIC TILES

WALL

W1	WHITE PAINTED PLASTER
W2	150MMX150MM GLAZED CERAMIC TILES UP TO 2000MM A.F.F.L.

CEILING

C1	PAINTED EXPOSED CONCRETE
C2	PAINTED EXPOSED STRUCTURE/FACTORY FINISH

FINISHING SCHEDULE 1

Room No.	USAGE	FLOOR	WALL	CEILING
101	LIGHT BRIG BAY	F1	W1	C2
102	OFFICE	F2	W1	C1
103	OFFICE	F2	W1	C1
104	OFFICE	F2	W1	C1
105	PARTS	F1	W1	C1
106	TOOLS	F1	W1	C1
107	BREAK	F2	W1	C1
108	TOILET	F3	W1,W2	C1
109	BATTERY	F1	W1	C2
110	NOT USED	–	–	–

FINISHING SCHEDULE 2

Room No.	USAGE	FLOOR	WALL	CEILING
111	HEAVY BRIG BAY	F1	W1	C2
112	OFFICE	F2	W1	C1
113	OFFICE	F2	W1	C1
114	OFFICE	F2	W1	C1
115	PARTS	F1	W1	C1
116	TOOLS	F1	W1	C1
117	BREAK	F2	W1	C1
118	TOILET	F3	W1,W2	C1
119	BATTERY	F1	W1	C2

NOTES:

1– ALL WALLS ARE CMU UNLESS NOTED OTHERWISE.

2– ALL WALLS TERMINATE AT CEILING UNLESS NOTED OTHERWISE.

3– ALL DOOR JAMBS ARE 200MM UNLESS NOTED OTHERWISE.

4– ALL DIMENSIONS ARE TO FACE OF CMU UNLESS NOTED OTHERWISE. REF. STRUCT. DRGS.

5– ALL VERTICAL DIMENSIONS & LEVELS ARE FROM GROUND FLOOR FINISHED SLAB. THIS ELEVATION IS +0000.

6– SEE DRAWING CO-A-05 & CO-A-06 FOR OPENING SCHEDULES & TYPES.

7– SEE DRAWING CO-A-02, CO-A-03 & CO-A-04 FOR STANDARD DETAILS.

8– SEE STRUCTURAL DRAWINGS FOR LOCATION OF BUILDING CONTROL, EXPANSION AND SEISMIC JOINTS.

9– TOTAL AREA OF BUILDING IS 1427.90 M2.

10– SEE MANUFACTURER BUILDING SYSTEMS DRAWINGS AS A REFERENCE.

WALL SYMBOLS:

CMU 3200MM HIGH

CMU LOW HEIGHT WALL +/– 2000 MM WITH CERAMIC TILE FINISH

CJ — CMU CONTROL JOINT

NOTE:

ORIENT BUILDING ON SITE SUCH THAT TOILETS ARE ON A NORTH/SOUTH ACCESS.

1 0 1 2 3 4 5 6 7 8 9
1:100

DRAWING NOT TO SCALE

SYMBOL	DESCRIPTION	DATE	APR

DESIGNED BY: XXX
DWN BY: XXX
CHK BY: XXX
DATE: 06-27-07
SUBMITTED BY: CHIEF, PANEL HQ PROJECTS DEV
FILE NO.: AF0707MG-A-01

US Army Corps of Engineers Transatlantic Programs Center

ANA REGIONAL BRIGADE
PAKTIKA, AFGHANISTAN
BRIGADE & GARRISON HQ COMPLEX
MAINTENANCE GARAGE (9 BAY)
FLOOR PLAN

SHEET REFERENCE NUMBER:
PJ
MG-A-01

$(getvar, "dwgprefix")$(getvar, "dwgname")$(edtime, 0, MON DD"", YYYY – HHMMam/pm)

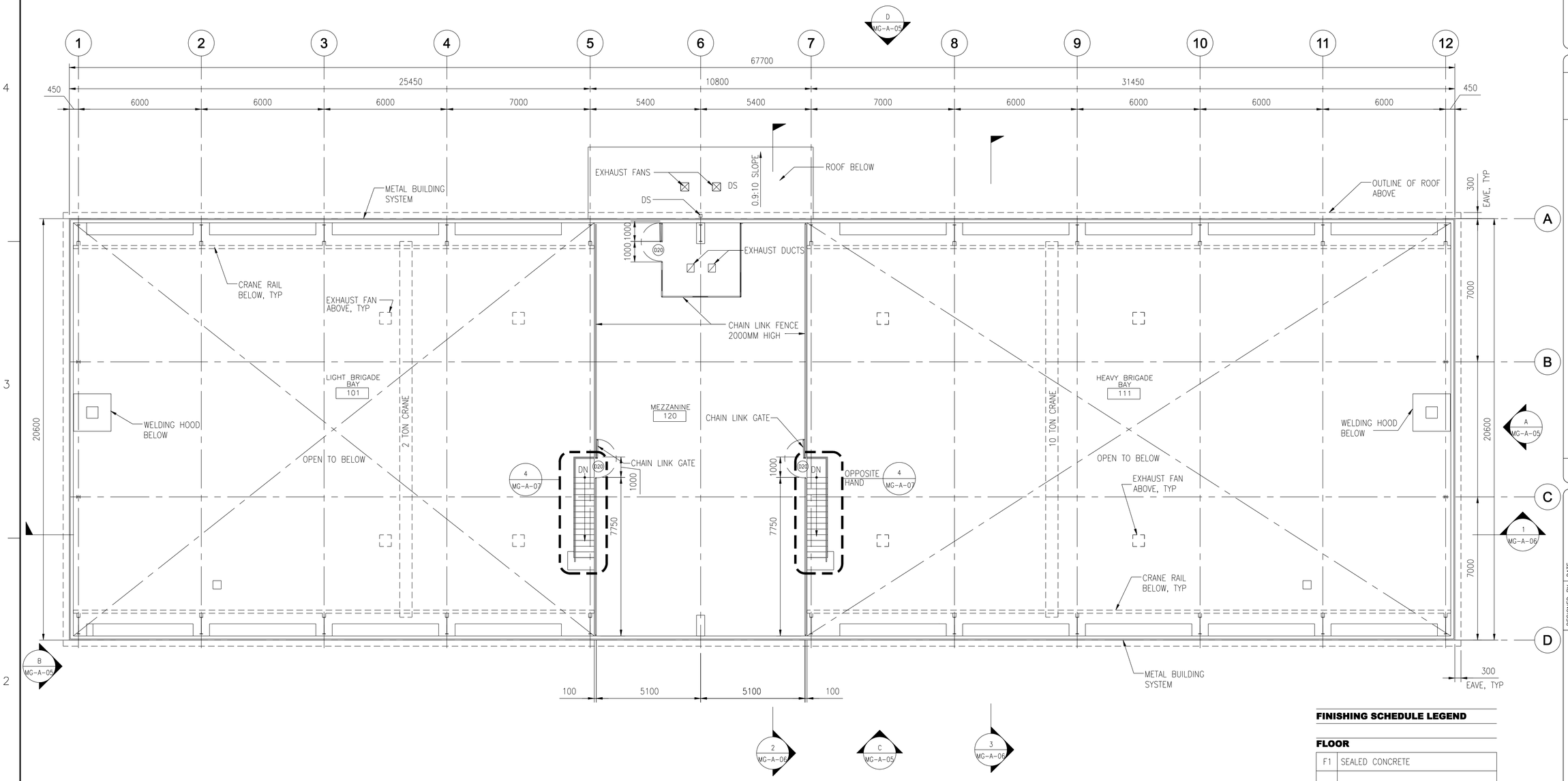

1 MEZZANINE FLOOR PLAN

MG-A-02 SCALE: 1:100

FINISHING SCHEDULE LEGEND

FLOOR

F1	SEALED CONCRETE

WALL

W1	WHITE PAINTED PLASTER
W2	150MMX150MM GLAZED CERAMIC TILES UP TO 2000MM A.F.F.L.

CEILING

C1	FLAT WHITE PAINTED PLASTER OVER CHICKEN WIRE
C2	PAINTED EXPOSED STRUCTURE/FACTORY FINISH

FINISHING SCHEDULE

Room No.	USAGE	FLOOR	WALL	CEILING
120	MEZZANINE	F1	W1	C2

1 0 1 2 3 4 5 6 7 8 9
1:100

DRAWING NOT TO SCALE

SYMBOL	DESCRIPTION	DATE	APR

DESIGNED BY: XXX
DATE: 06-27-07
DWN BY: XXX
SUBMITTED BY: PHILIP J. PANELLO CHIEF, PROJECT FACILITIES DEV
CHK BY: XXX
FILE NO.: AF0707MG-A-02

US Army Corps of Engineers Transatlantic Programs Center

ANA REGIONAL BRIGADE
PAKTIKA, AFGHANISTAN
BRIGADE & GARRISON HQ COMPLEX
MAINTENANCE GARAGE (9 BAY)
MEZZANINE FLOOR PLAN

SHEET REFERENCE NUMBER:
PJ
MG-A-02

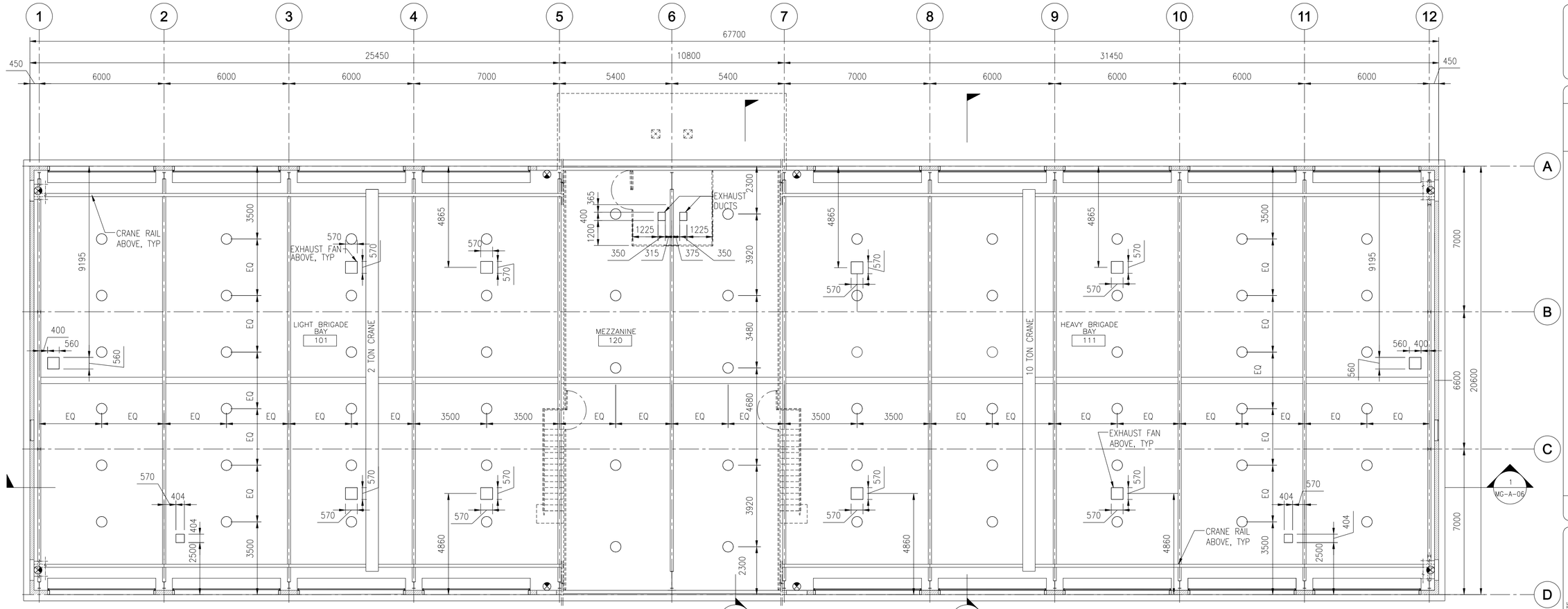

1 REFLECTED CIELING PLAN

MG-A-03 SCALE: 1:100

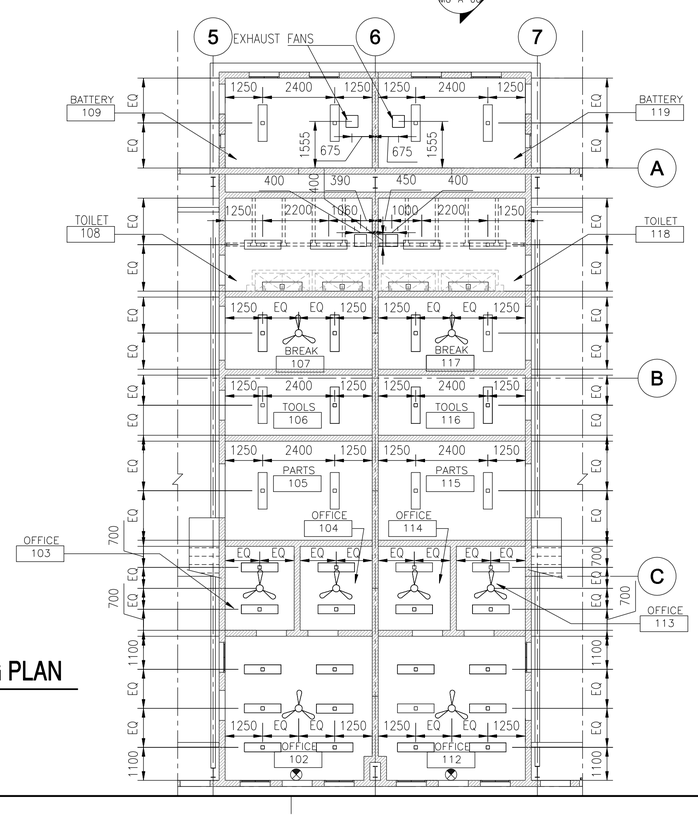

2 BELOW MEZZANINE REFLECTED CEILING PLAN

MG-A-03 SCALE: 1:100

NOTES:

1- SEE SHEET MG-A-01 FOR FINISH SCHEDULE.
2- SEE SHEET CO-E-01 FOR LIGHTING LEGENED.
3- ALL HVAC OPENINGS DIMENSION SHALL BE VERIFIED WITH APPROVED SUBMITTALS.
4- SEE SHEET MG-E-02 FOR EXIT SIGN LOCATIONS.

1 0 1 2 3 4 5 6 7 8 9
1:100

DRAWING NOT TO SCALE

SYMBOL	DESCRIPTION	DATE	APR

DESIGNED BY: XXX
DWN BY: XXX
CHK BY: XXX
DATE: 06-27-07
SUBMITTED BY: CHIEF, PANELLO PROJECTS DEV
FILE NO.: AF0707MG-A-03

US Army Corps of Engineers Transatlantic Programs Center

ANA REGIONAL BRIGADE
PAKTIKA, AFGHANISTAN
BRIGADE & GARRISON HQ COMPLEX
MAINTENANCE GARAGE (9 BAY)
REFLECTED CEILING PLANS

SHEET REFERENCE NUMBER:
PJ
MG-A-03

$(getvar, "dwgprefix")$(getvar, "dwgname")$(edtime, 0, MON DD"", YYYY - H:MMam/pm)

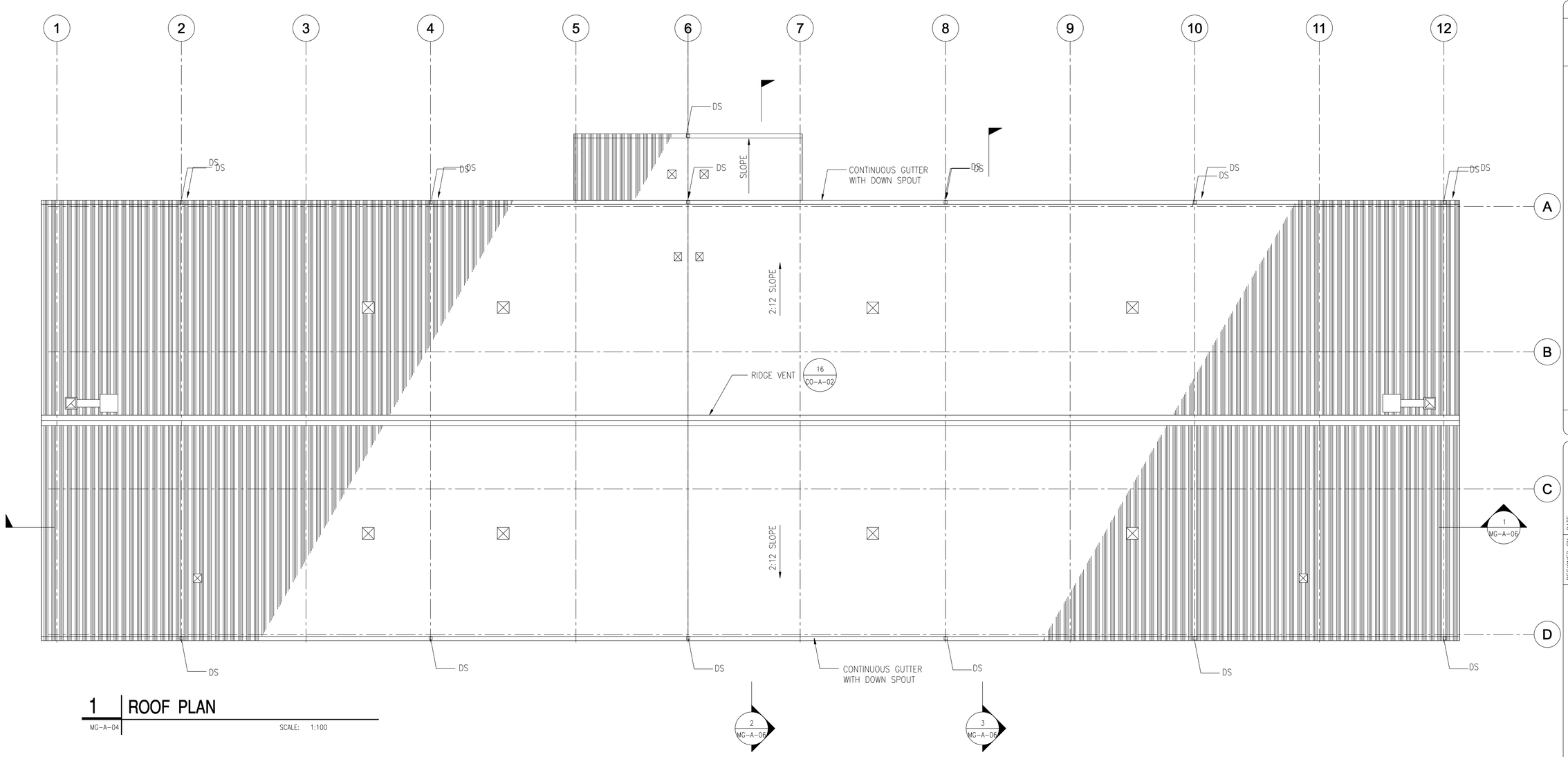

1 ROOF PLAN

MG-A-04 SCALE: 1:100

NOTE:

- FOR HVAC OPENINGS LOCATION AND DIMENSION REFER TO MG-A-03.

1 0 1 2 3 4 5 6 7 8 9
1:100

SYMBOL	DESCRIPTION	DATE	APR

DESIGNED BY: XXX
DWN BY: XXX
CHK BY: XXX
DATE: 06-27-07
SUBMITTED BY: CHIEF, PROJ MGT PACIFICS DEV
FILE NO.: AF0707MG-A-04

US Army Corps of Engineers Transatlantic Programs Center

ANA REGIONAL BRIGADE
PAKTIKA, AFGHANISTAN
BRIGADE & GARRISON HQ COMPLEX
MAINTENANCE GARAGE (9 BAY)
ROOF PLAN

SHEET REFERENCE NUMBER:
PJ
MG-A-04

$(getvar, "dwgprefix")$(getvar, "dwgname")$(edtime, 0, MON DD",", YYYY - HHMMam/pm)

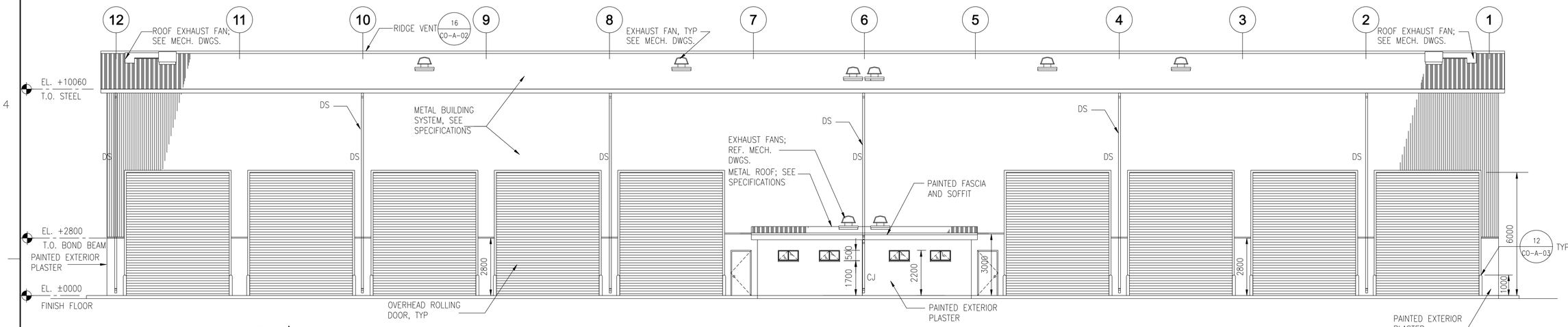

D REAR ELEVATION

MG-A-05 SCALE: 1:100

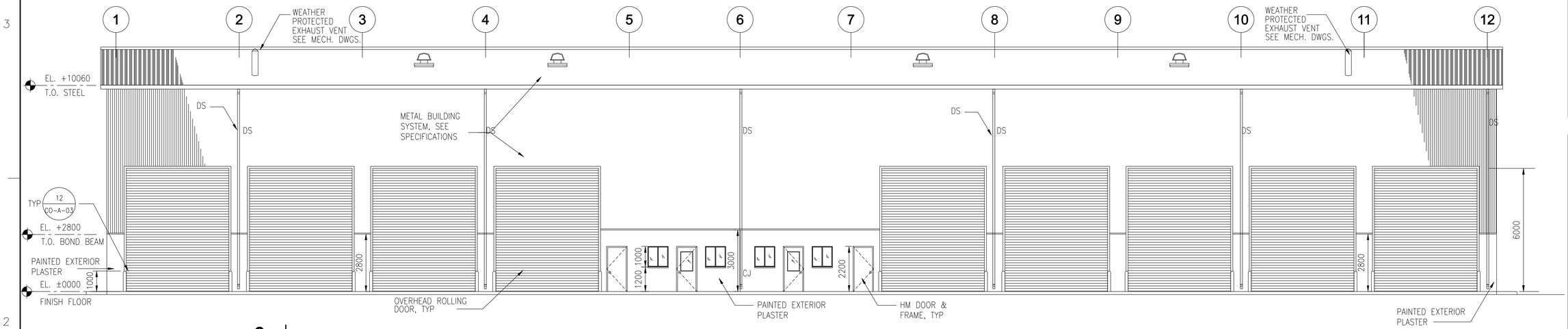

C FRONT ELEVATION

MG-A-05 SCALE: 1:100

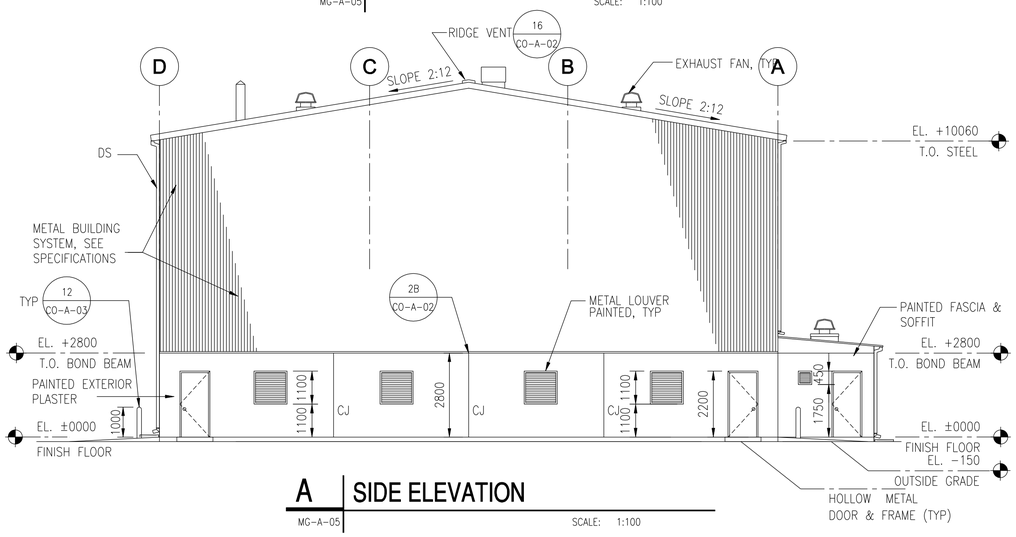

A SIDE ELEVATION

MG-A-05 SCALE: 1:100

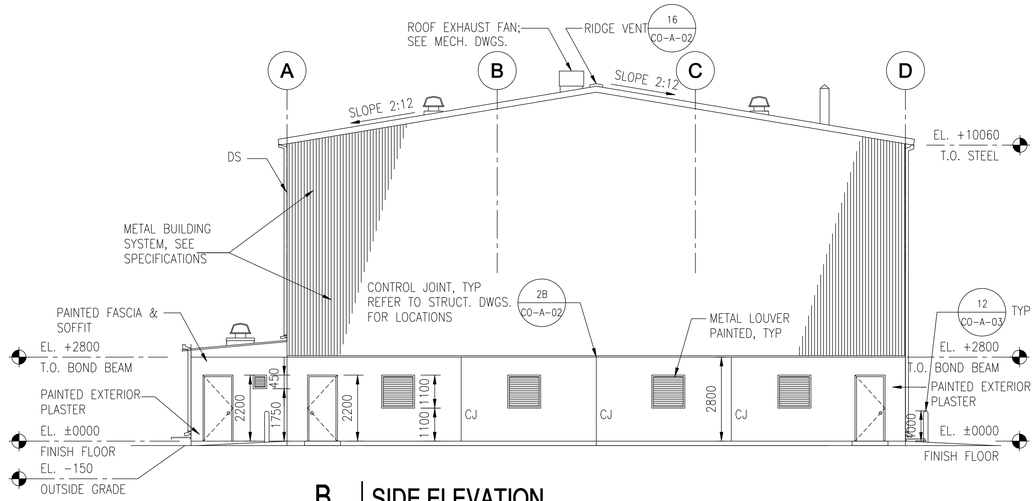

B SIDE ELEVATION

MG-A-05 SCALE: 1:100

1 0 1 2 3 4 5 6 7 8 9
1:100

DRAWING NOT TO SCALE

SYMBOL	DESCRIPTION	DATE	APR

DESIGNED BY: XXX DATE: 06-27-07
DWN BY: XXX SUBMITTED BY: PANELLO
CHK BY: XXX Chief, PDT PACIFICS DEV
FILE NO.: AF0707 MG-A-05

US Army Corps of Engineers Transatlantic Programs Center

ANA REGIONAL BRIGADE
PAKTIKA, AFGHANISTAN
BRIGADE & GARRISON HQ COMPLEX
MAINTENANCE GARAGE (9 BAY)
BUILDING ELEVATIONS

SHEET REFERENCE NUMBER:
PJ
MG-A-05

${getvar, "dwgprefix"}${getvar, "dwgname"}${edtime, O, MON DD", YYYY - H:MMam/pm}

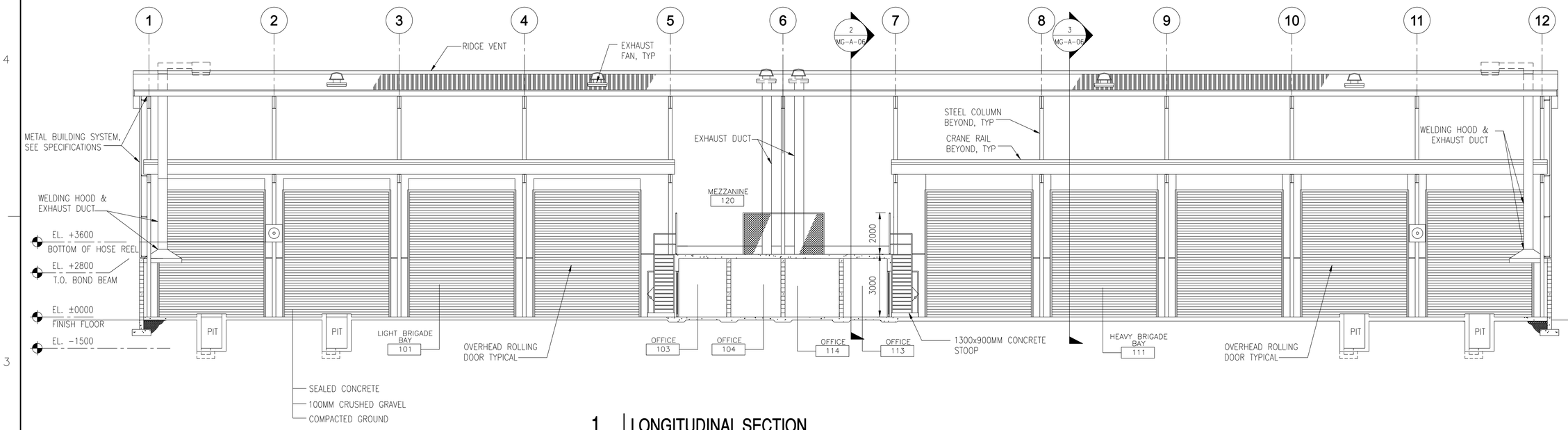

1 LONGITUDINAL SECTION

MG-A-06 SCALE: 1:100

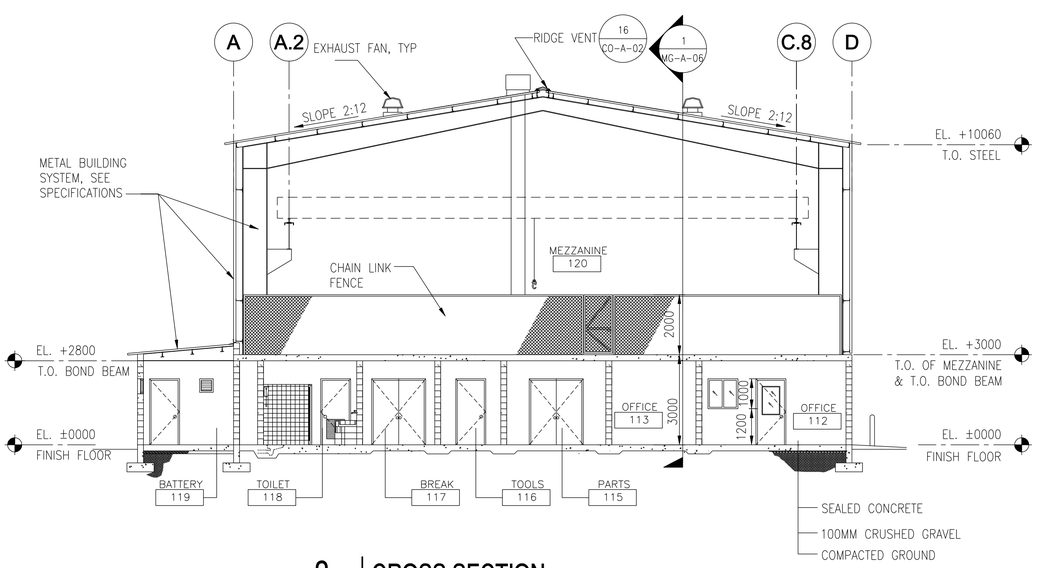

2 CROSS SECTION

MG-A-06 SCALE: 1:100

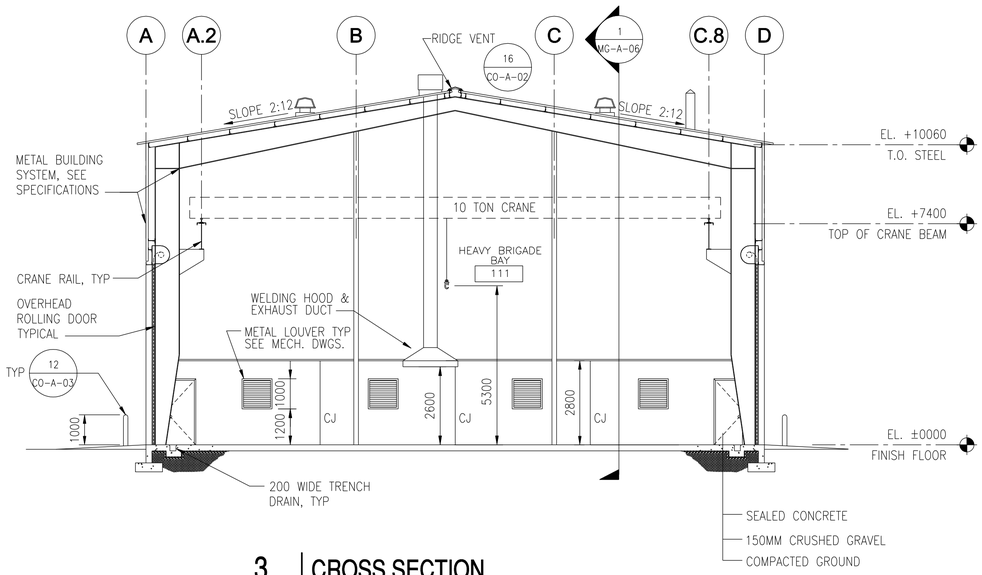

3 CROSS SECTION

MG-A-06 SCALE: 1:100

1 0 1 2 3 4 5 6 7 8 9
1:100

DRAWING NOT TO SCALE

SYMBOL	DESCRIPTION	DATE	APR

DESIGNED BY: XXX
DATE: 06-27-07
DWN BY: XXX
SUBMITTED BY: PHILIP J. PINELLO
CHIEF, PROJ MGT FACILITIES DEV
CHK BY: XXX
FILE NO.: AF0707MG-A-06

US Army Corps of Engineers
Transatlantic Programs Center

ANA REGIONAL BRIGADE
PAKTIKA, AFGHANISTAN
BRIGADE & GARRISON HQ COMPLEX
MAINTENANCE GARAGE (9 BAY)
BUILDING SECTIONS

SHEET REFERENCE NUMBER:
PJ
MG-A-06

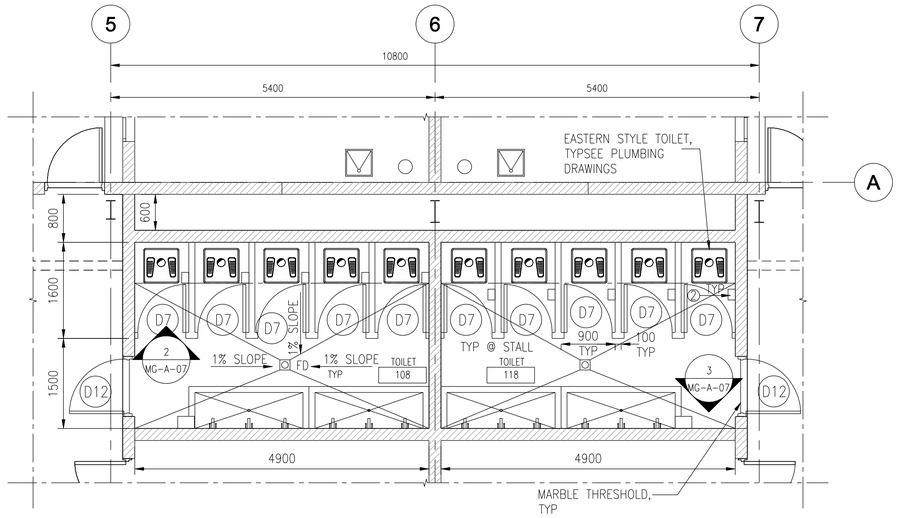

1 ENLARGED TOILETS PLAN

MG-A-07 SCALE: 1:50

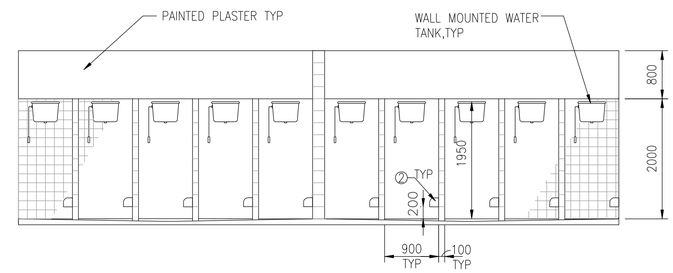

2 TOILETS ELEVATION

MG-A-07 SCALE: 1:50

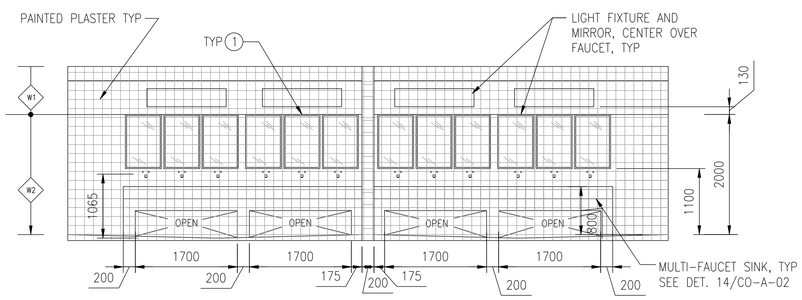

3 SINKS ELEVATION

MG-A-07 SCALE: 1:50

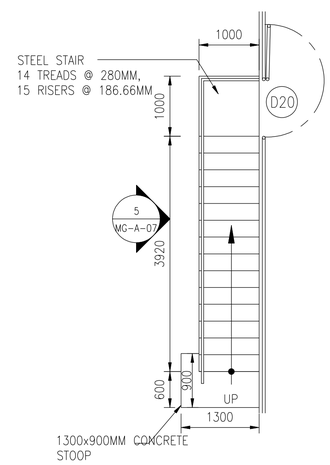

4 STAIR PLAN

MG-A-07 SCALE: 1:50

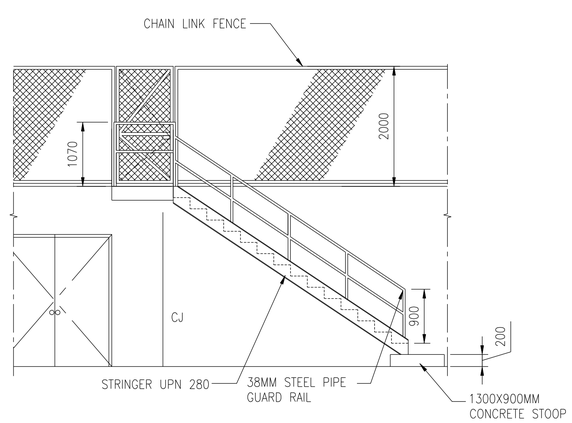

5 STAIR ELEVATION

MG-A-07 SCALE: 1:50

NOTE:

- SEE DET. 14/CO-A-04 FOR MULTI-FAUCET SINK DETAIL.

TOILET ACCESSORY SCHEDULE

NO.	DESCRIPTION
1	MIRROR 600X900X6MM, GLASS
2	STAINLESS STEEL TOILET PAPER HOLDER
3	SHOWER CURTAIN & ROD – NOT USED
4	SOAP HOLDER – NOT USED
5	METAL PEG – NOT USED

1 0 1 2 3 4
1:50

DRAWING NOT TO SCALE

SYMBOL	DESCRIPTION	DATE	APR

DESIGNED BY: XXX
DATE: 06-27-07
DWN BY: XXX
SUBMITTED BY: PHILIP J. PANELLO CHIEF, PACELTES DEV
CHK BY: XXX
FILE NO.: AF0707MG-A-07

US Army Corps of Engineers Transatlantic Programs Center

ANA REGIONAL BRIGADE
PAKTIKA, AFGHANISTAN
BRIGADE & GARRISON HQ COMPLEX
MAINTENANCE GARAGE (9 BAY)
ENLARGED TOILETS ROOM PLANS, STAIR PLAN AND ELEVATIONS

SHEET REFERENCE NUMBER:
PJ
MG-A-07

$(getvar, "dwgprefix")$(getvar, "dwgname")$(edtime, 0, MON DD"" YYYY - HHMMam/pm)

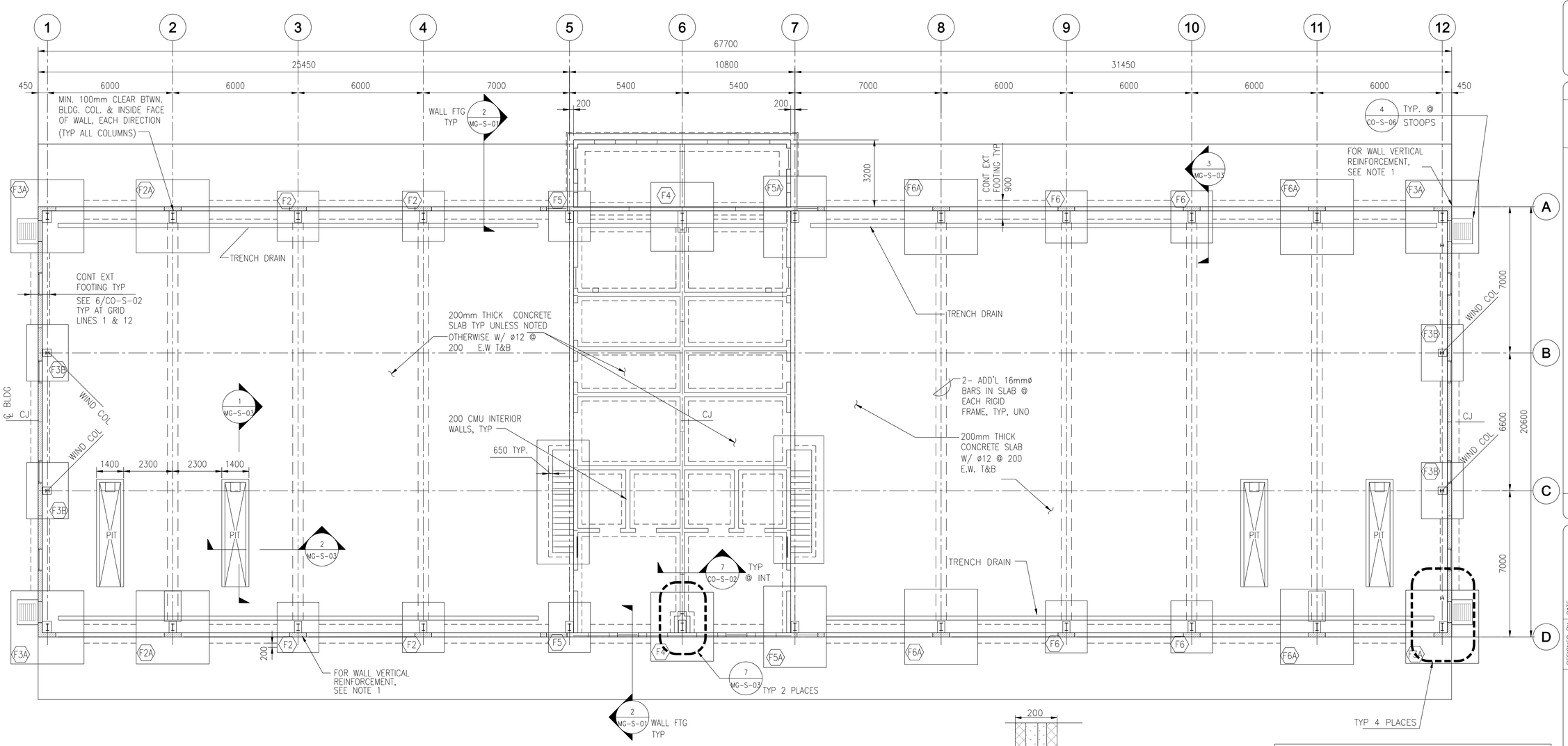

1 FOUNDATION PLAN

MG-S-01 SCALE: 1:100

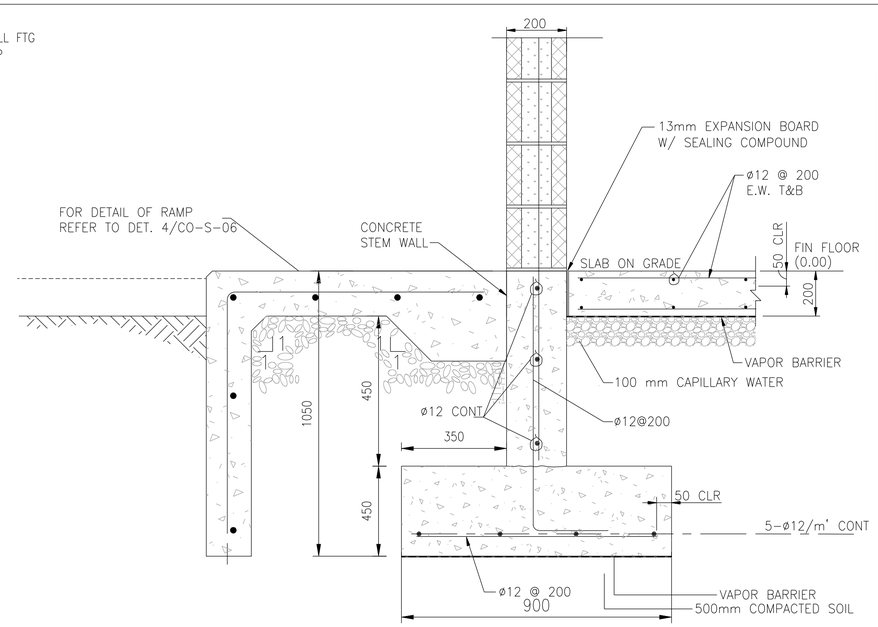

2 SECTION THROUGH EXTERIOR PERIMETER CMU WALL

MG-S-01 SCALE: N.T.S.

FOUNDATIONS ARE DESIGNED USING AN ALLOWABLE BEARING PRESSURE OF 0.75 KG/SQ. CM (1500 PSF), AND BOTTOM OF FOOTINGS ARE PLACED AS SHOWN ON DRAWINGS. GEOTECHNICAL INVESTIGATION SHALL CONFIRM BEARING CAPACITY TO BE NO LESS THAN 0.75 KG/SQ CM. IF GEOTECHNICAL INVESTIGATION SHOWS LESS THAN 0.75 KG/SQ CM THE CONTRACTOR SHALL REDESIGN FOOTINGS BASED ON THE GEOTECHNICAL INVESTIGATION. SEE SPECIFICAITON 01015 PARAGRAPH, GEOTECHNICAL, FOUNDATION AND SURVEY.

NOTES:

1. EXTERNAL VERTICAL WALL REINFOCREMENT ø18mm @ 800 FULLY GROUTED WHEN REINFORCEMENT OCCURS
2. ALLWALLS SUPPORTING RC SLAB SHOULD BE FULLY GROUT WITH VERTICAL RFT. ø16 @400 & HORIZONTAL RFT 2ø10 @ 400
3. SEE MANUFACTURERS DRAWINGS FOR PRE-ENGINEERED BUILDING DETAILS AND CRANE RAIL SUPPORTS.
4. SEE TYPICAL DETAILS FOR CONTROL JOINTS AT INTERIOR WALL INTERSECTIONS AND CORNERS.

1:100 DRAWING NOT TO SCALE

SPREAD FOOTING SCHEDULE

MARK	SIZE	REINFORCING
F2	2400 x 2000 x 500mm THICK	ø16 @ 200mm EACH WAY TOP & BOTT
F2A	3500 x 3500 x 500mm THICK	ø16 @ 200mm EACH WAY TOP & BOTT
F3A	3500 x 3500 x 500mm THICK	ø16 @ 200mm EACH WAY TOP & BOTT
F3B	2700 x 2000 x 500mm THICK	ø16 @ 200mm EACH WAY TOP & BOTT
F4	3300 x 3000 x 500mm THICK	ø16 @ 200mm EACH WAY TOP & BOTT
F5	2400 x 2000 x 500mm THICK	ø16 @ 200mm EACH WAY TOP & BOTT
F5A	3900 x 3000 x 500mm THICK	ø16 @ 200mm EACH WAY TOP & BOTT
F6	2500 x 2000 x 500mm THICK	ø16 @ 200mm EACH WAY TOP & BOTT
F6A	3600 x 3500 x 500mm THICK	ø16 @ 200mm EACH WAY TOP & BOTT

SYMBOL	DESCRIPTION	DATE	APR

DESIGNED BY: TCP
DATE: 06-27-07
DWN BY: TCP
SUBMITTED BY: PHILLIP J. DINELLO Chief, Int. Facilities Dev
CHK BY: KGO
FILE NO.: AF0707 MG-S-01

US Army Corps of Engineers Transatlantic Programs Center

ANA REGIONAL BRIGADE
PAKTIKA, AFGHANISTAN
BRIGADE & GARRISON HQ COMPLEX
MAINTENANCE GARAGE (9 BAY)
FOUNDATION PLAN

SHEET REFERENCE NUMBER:
PJ
MG-S-01

${getvar, "dwgprefix"}${getvar, "dwgname"}${edtime, 0, MON DD"", YYYY - H:MMam/pm}

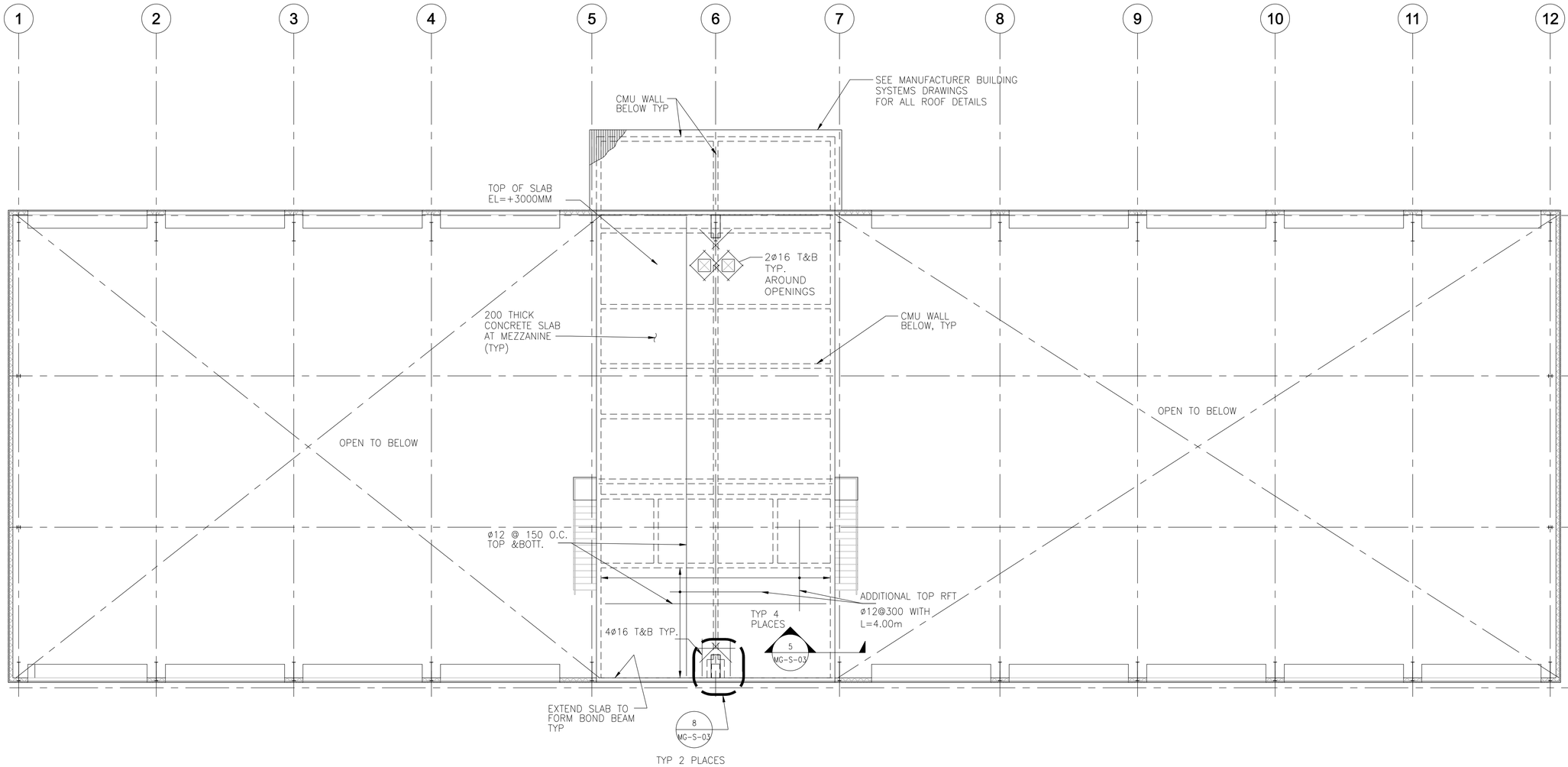

1 MEZZANINE FLOOR FRAMING PLAN

MG-S-02

SCALE: 1:100

1 0 1 2 3 4 5 6 7 8 9
1:100
DRAWING NOT TO SCALE

SYMBOL	DESCRIPTION	DATE	APR

DESIGNED BY: TCP
DWN BY: TCP
CHK BY: KGO
DATE: 06-27-07
SUBMITTED BY: PHILIP J. PINELLO CHIEF, PROJECTS DEV
FILE NO.: AF0707MG-S-02

US Army Corps of Engineers Transatlantic Programs Center

ANA REGIONAL BRIGADE
PARWAN, AFGHANISTAN
BRIGADE & GARRISON HQ COMPLEX
MAINTENANCE GARAGE (9 BAY)
MEZZANINE FLOOR FRAMING PLAN

SHEET REFERENCE NUMBER:
PJ
MG-S-02

$(getvar, "dwgprefix")$(getvar, "dwgname")$(edtime, 0, MON DD", YYYY - HHMMam/pm)

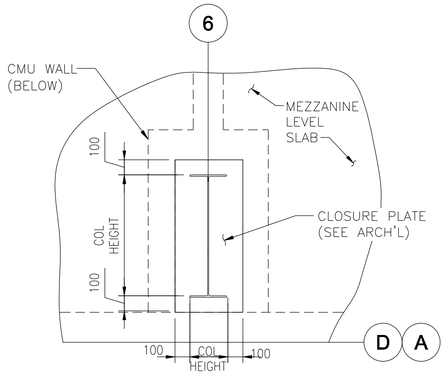

8 PLAN DETAIL

MG-S-03 SCALE: 1:20

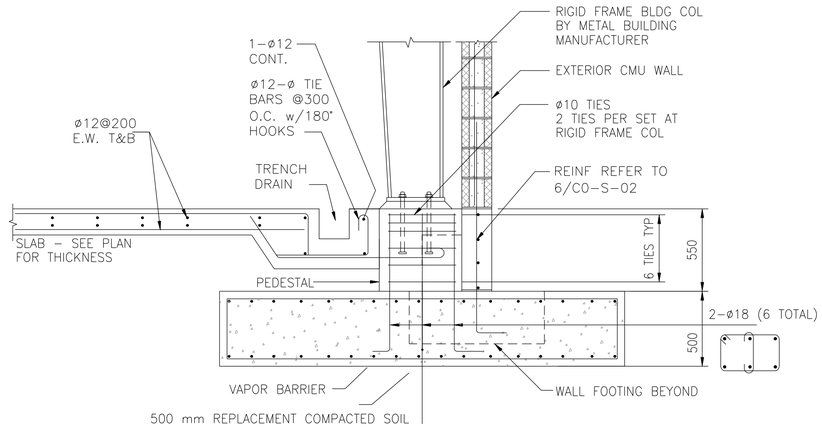

3 SECTION AT BUILDING FOUNDATION

MG-S-03 SCALE: 1:20

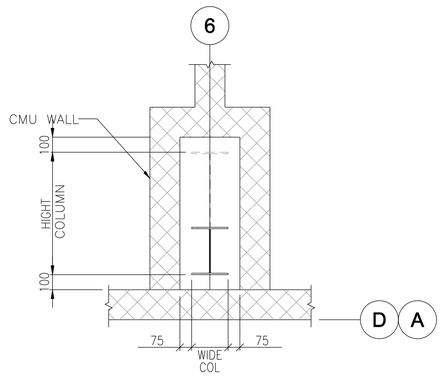

7 PLAN DETAIL

MG-S-03 SCALE: 1:20

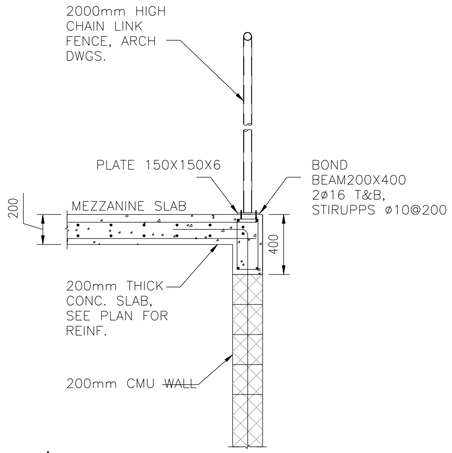

5 SECTION AT GUARDRAIL

MG-S-03 SCALE: 1:20

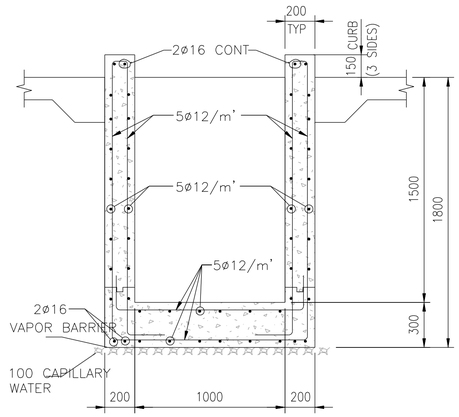

2 TRANSVERSE SECTION AT PIT

MG-S-03 SCALE: 1:20

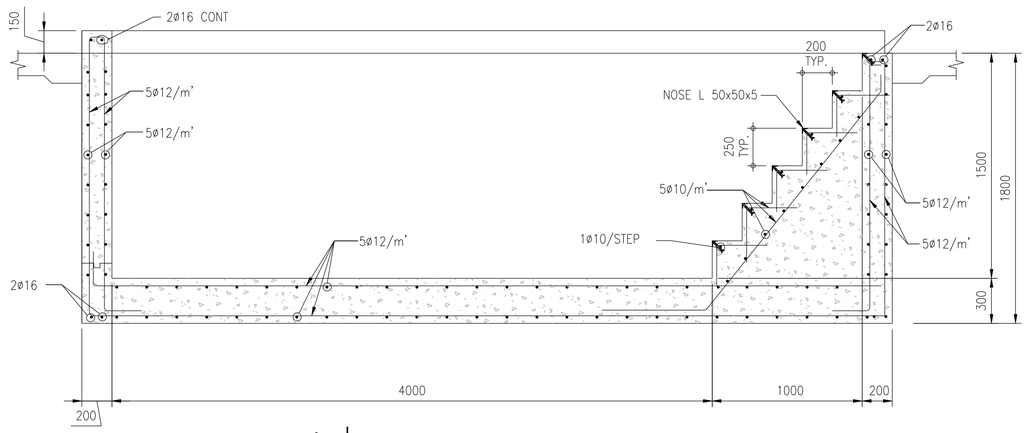

1 LONGITUDINAL SECTION AT PIT

MG-S-03 SCALE: 1:20

1 .50 0 1
1:20 DRAWING NOT TO SCALE

SYMBOL	DESCRIPTION	DATE	APR

DESIGNED BY: TCP
DWN BY: TCP
CHK BY: KGO
DATE: 06-27-07
SUBMITTED BY: CHIEF, PROJECTS DEV
FILE NO.: AF0707MG-S-03

US Army Corps of Engineers Transatlantic Programs Center

ANA REGIONAL BRIGADE
PAKTIKA, AFGHANISTAN
BRIGADE & GARRISON HQ COMPLEX
MAINTENANCE GARAGE (9 BAY)
SECTIONS AND DETAILS

SHEET REFERENCE NUMBER:
PJ
MG-S-03

$(getvar, "dwgprefix")$(getvar, "dwgname")$(edtime, 0, MON DD", YYYY - HHMMam/pm)

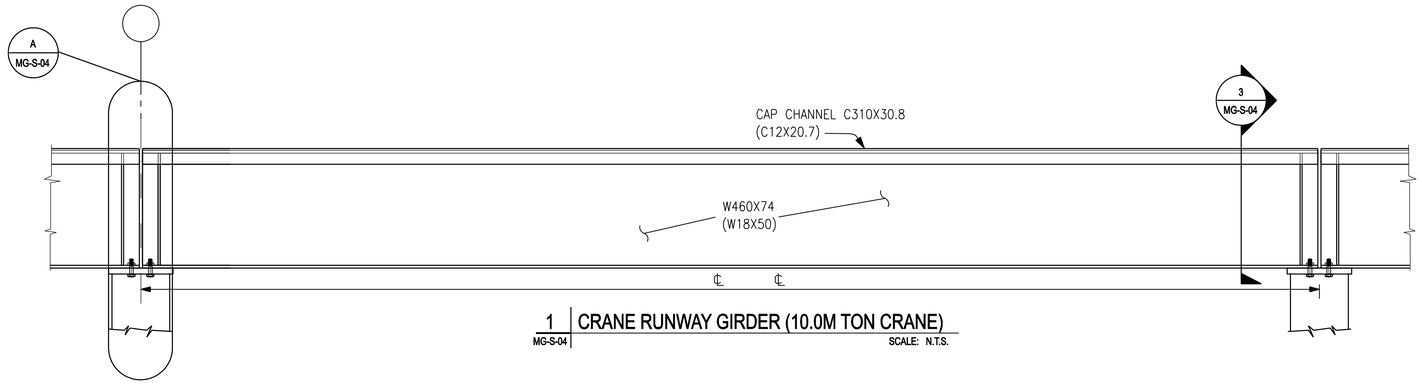

1 | CRANE RUNWAY GIRDER (10.0M TON CRANE)
MG-S-04 | SCALE: N.T.S.

NOTES:

1. THE CONTRACTOR (OR DESIGNER) SHALL INCLUDE LOADS DUE TO 10.0M TON OVERHEAD TRAVELING CRANE DURING DESIGN OF METAL BUILDING FRAMES AND BUILDING COMUMN FOOTINGS.
2. SEE ARCHITECTURAL AND STRUCTURAL PLANS FOR LOCATIONS OF 10.0M TON AND 2.0M TON CRANES.

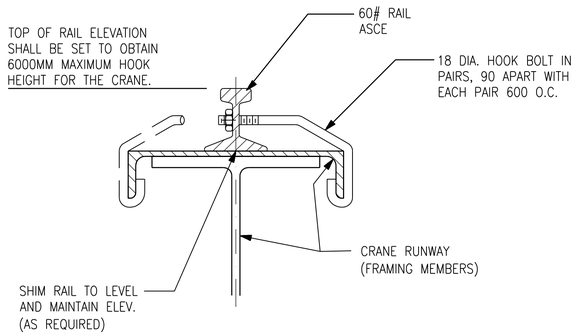

2 | SECTION
MG-S-04 | SCALE: N.T.S.

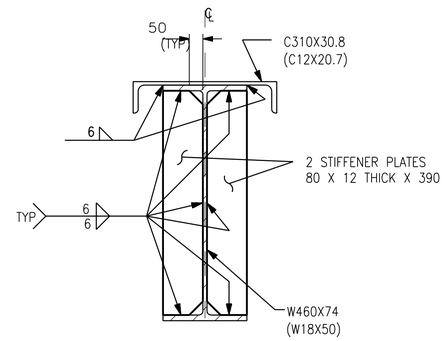

3 | SECTION
MG-S-04 | SCALE: N.T.S.

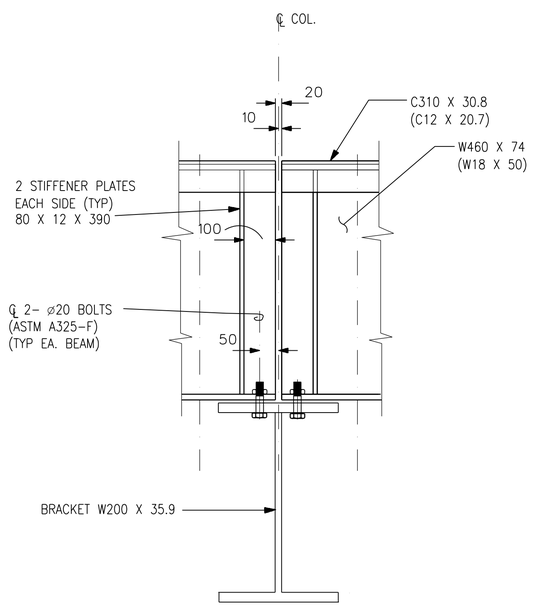

A | DETAIL
MG-S-04 | SCALE: N.T.S.

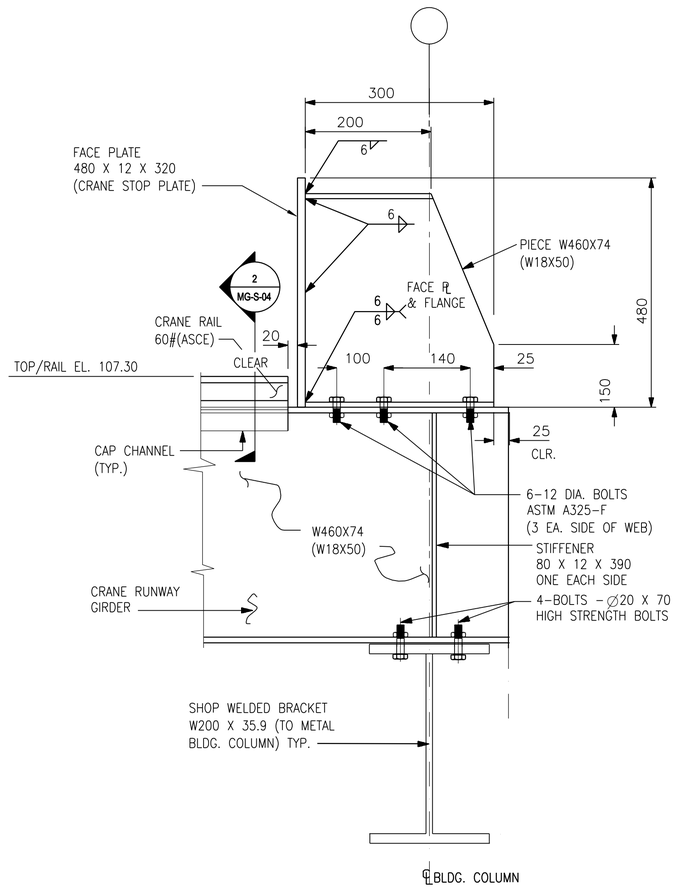

4 | TYPICAL CRANE RUNWAY STOP PLATE (ENDS)
MG-S-04 | SCALE: N.T.S.

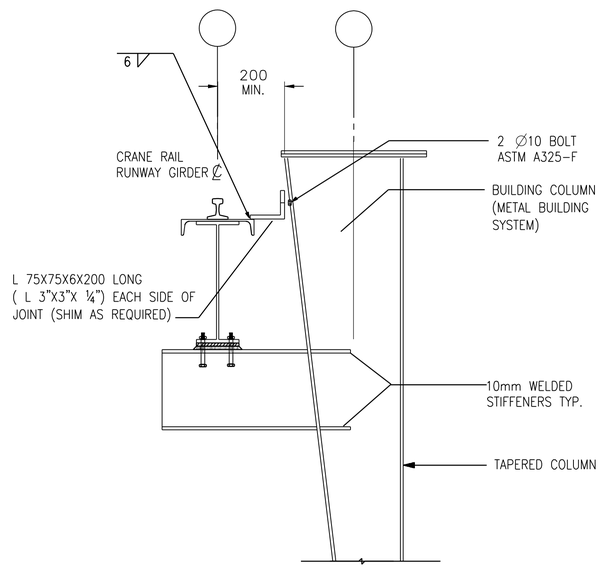

5 | COMBINED COLUMN (CRANE & BLDG.)
MG-S-04 | SCALE: N.T.S.

DRAWING NOT TO SCALE

SYMBOL	DESCRIPTION	DATE	APR

DESIGNED BY: TCP
DWN BY: TCP
CHK BY: KGO
DATE: 06-27-07
SUBMITTED BY: PHILIP J. DINELLO, P.E. PROJECT DEV. ENGINEER
FILE NO.: AF0707 PJ-MG-S-04

US Army Corps of Engineers Transatlantic Programs Center

ANA REGIONAL BRIGADE
PAKTIKA, AFGHANISTAN
BRIGADE & GARRISON HQ COMPLEX
MAINTENANCE GARAGE (9 BAY)
10M - TON CRANE
SECTIONS AND DETAILS

SHEET REFERENCE NUMBER:
PJ
MG-S-04

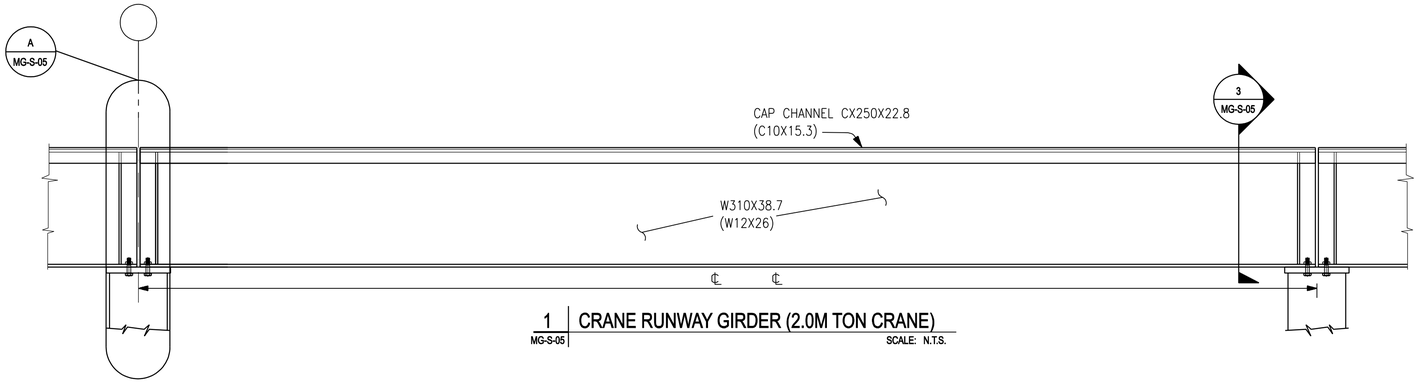

1 | CRANE RUNWAY GIRDER (2.0M TON CRANE)
MG-S-05 | SCALE: N.T.S.

NOTE:

REFER TO ARCHITECTURAL AND STRUCTURAL DRAWINGS FOR LOCATIONS OF 2M-TON CRANE. THE CONTRACTOR SHALL USE CRANE LOADS OF 2M-TON OVERHEAD TRAVELING CRANE DURING DESIGN OF "METAL BUILDING FRAME STRUCTURE AND COLUMN (FRAME) FOOTINGS."

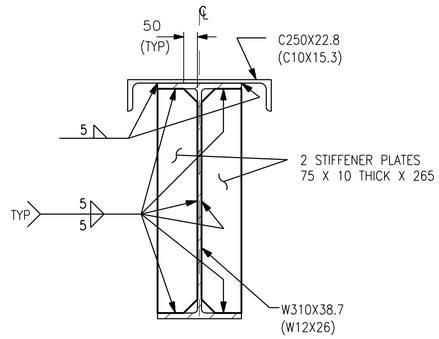

3 | SECTION
MG-S-05 | SCALE: N.T.S.

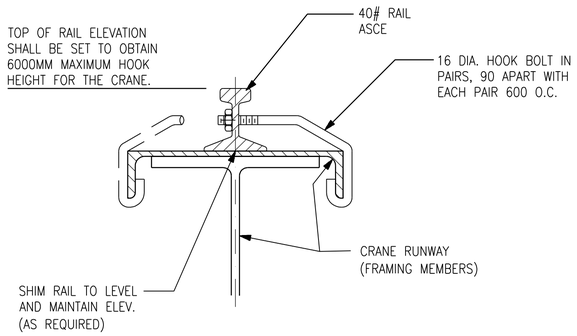

2 | SECTION
MG-S-05 | SCALE: N.T.S.

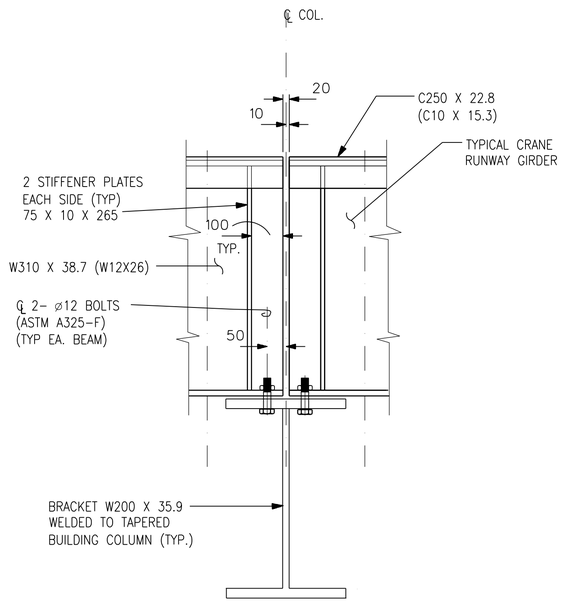

A | DETAIL
MG-S-05 | SCALE: N.T.S.

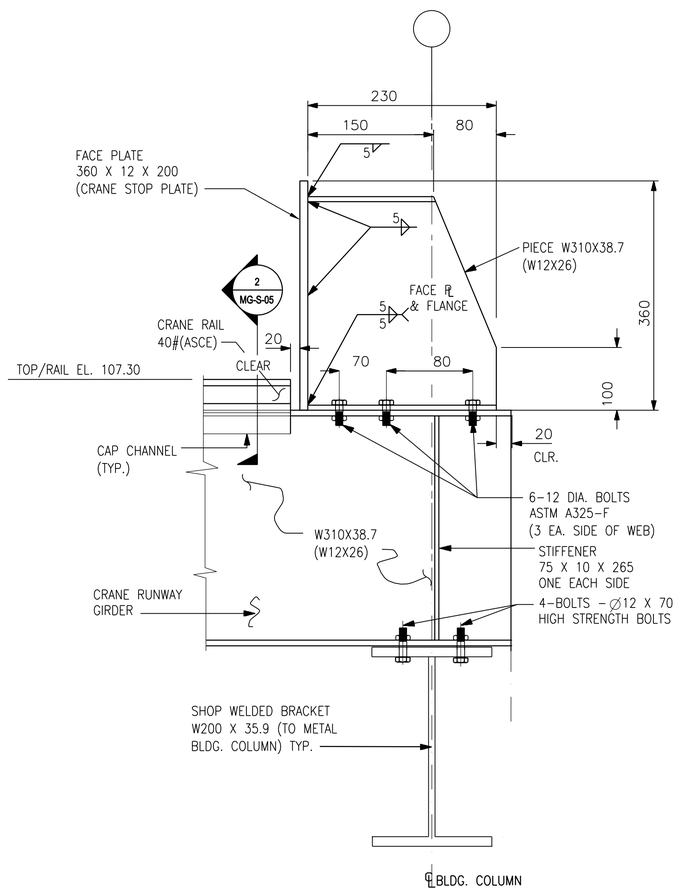

4 | TYPICAL CRANE RUNWAY STOP PLATE (ENDS)
MG-S-05 | SCALE: N.T.S.

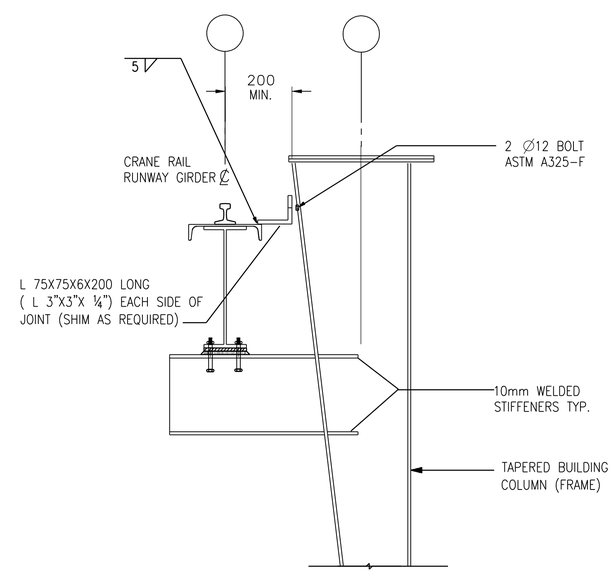

5 | COMBINED COLUMN (CRANE & BLDG.)
MG-S-05 | SCALE: N.T.S.

DRAWING NOT TO SCALE

SYMBOL	DESCRIPTION	DATE	APR

DESIGNED BY: TCP
DWN BY: TCP
CHK BY: KGO
DATE: 06-27-07
SUBMITTED BY: PHILIP L. DINELLO, CHIEF, PDT FACILITIES DEV
FILE NO.: AF0707PJ-MG-S-05

US Army Corps of Engineers
Transatlantic Programs Center

ANA REGIONAL BRIGADE
PAKIKA, AFGHANISTAN
BRIGADE & GARRISON HQ COMPLEX
MAINTENANCE GARAGE (9 BAY)
2M - TON CRANE
SECTIONS AND DETAILS

SHEET REFERENCE NUMBER:
PJ
MG-S-05

NOTES:

1. FOR STANDARD DETAILS SEE DWG. No. (CD-M-01, 02, 03 & 04).
2. FOR CONTROL DIAGRAMS SEE DWG. No. (CD-M-05).
3. FOR LEGEND AND ABBREVIATION SEE DWG. No. (CD-M-06).

SPECIFIC NOTES:

1. 500x500mm EXHAUST DUCT DOWN, TO WELDING HOOD AND UTR TO EXHAUST FAN ON ROOF.
2. WELDING HOOD
3. CO2 EXHAUST DUCT REEL FOR TAIL PIPE EXHAUST.
4. DIESEL FIRED BY OTHER

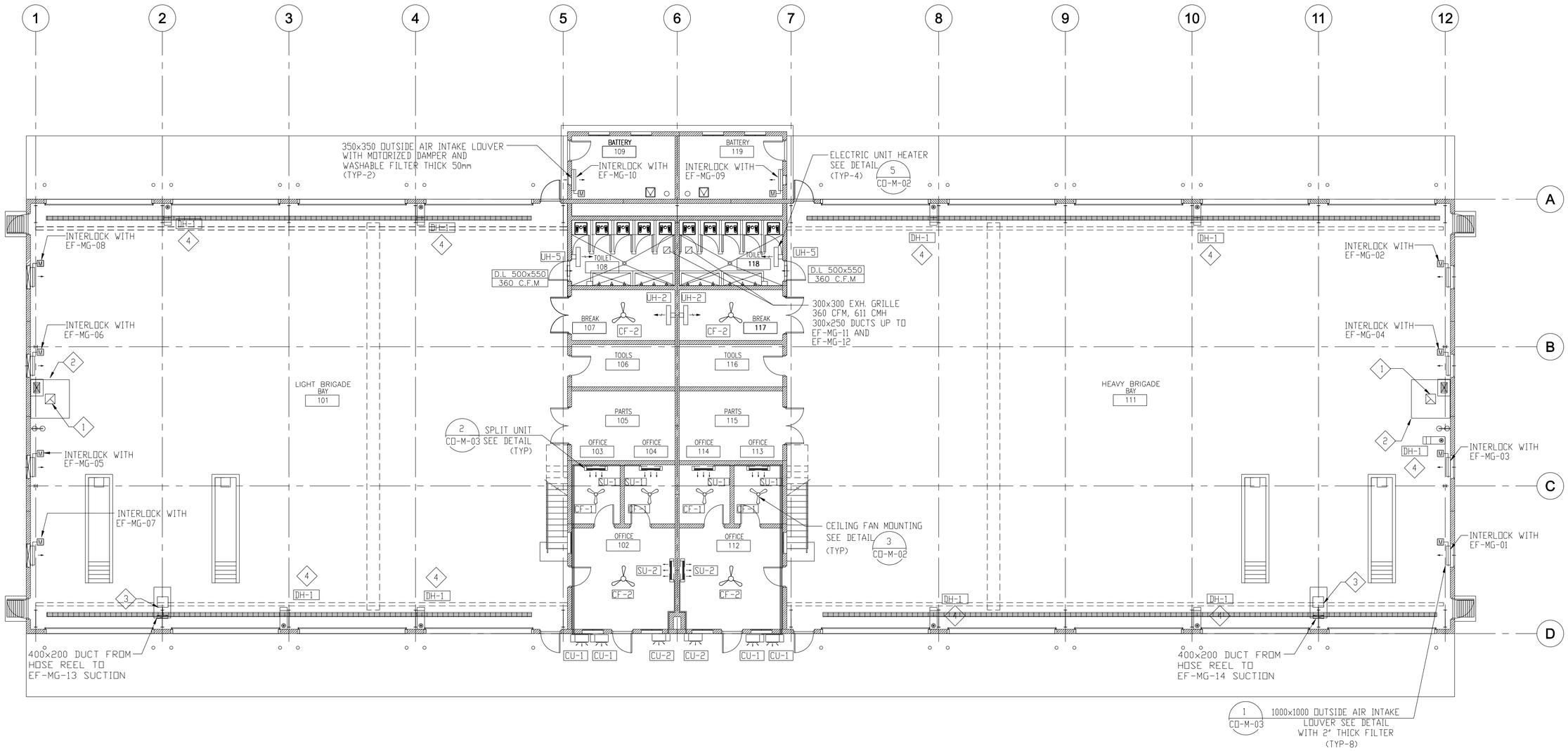

1 MECHANICAL FLOOR PLAN

MG-M-01 SCALE: 1:100

1 0 1 2 3 4 5 6 7 8 9
1:100 DRAWING NOT TO SCALE

SYMBOL	DESCRIPTION	DATE	APR

DESIGNED BY: F.MAMDOOH
DATE: 06-27-07
DWN. BY: A.LATIF
SUBMITTED BY: R. GREWAL CHIEF, EP BLDG SYSTEMS
CHK. BY: A.MAKRAM
FILE NO.: AF0707MG-M-01

US Army Corps of Engineers Transatlantic Programs Center

ANA REGIONAL BRIGADE
PAKTIKA, AFGHANISTAN
BRIGADE & GARRISON HQ COMPLEX
MAINTENANCE GARAGE (9 BAY)
MECHANICAL FLOOR PLAN

SHEET REFERENCE NUMBER:
PJ
MG-M-01

NOTES:

1. FOR STANDARD DETAILS SEE DWG. No. (CO-M-01, 02, 03 & 04).
2. FOR CONTROL DIAGRAMS SEE DWG. No. (CO-M-05).
3. FOR LEGEND AND ABBREVIATION SEE DWG. No. (CO-M-06).

SPECIFIC NOTES:

1. 350x350 EXHAUST DUCT UTR. EXTEND EXHAUST DUCT 1220mm ABOVE ROOF WITH GOOSENECK.

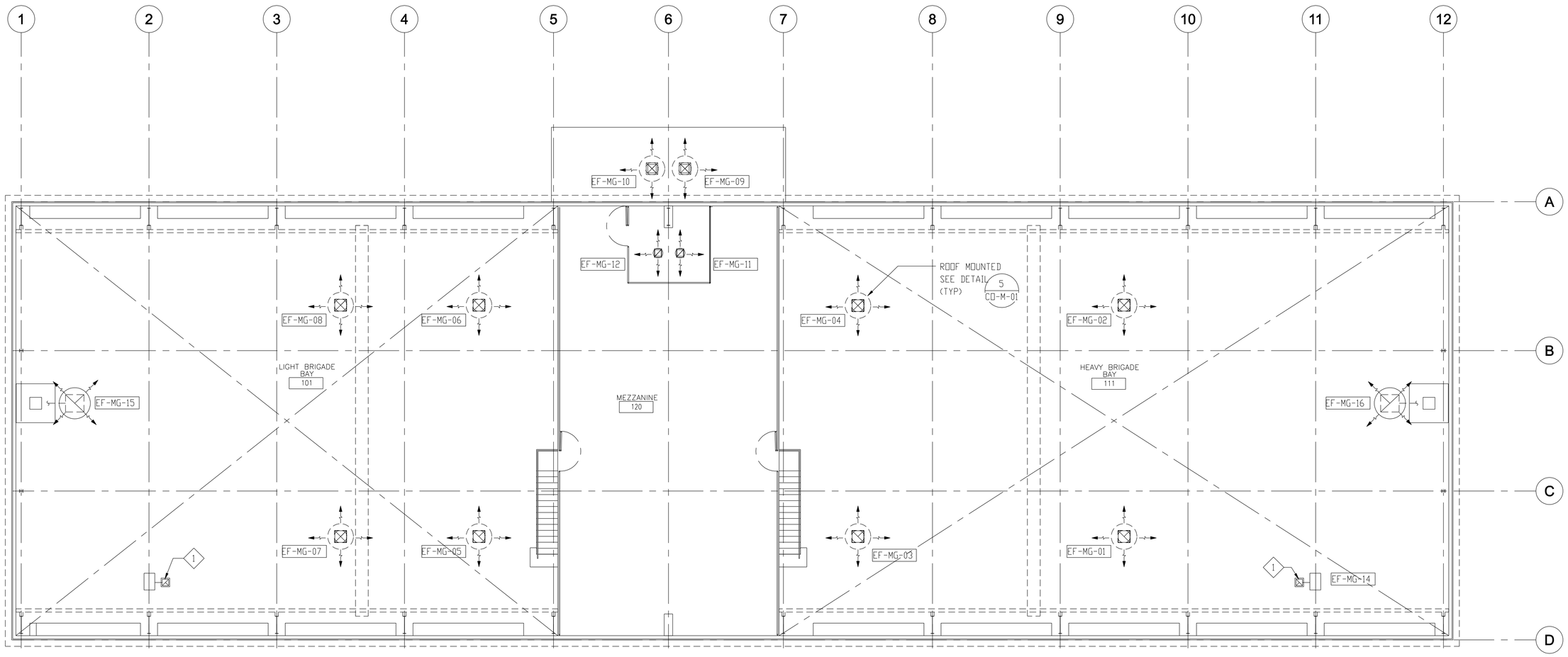

1 MEZZANINE FLOOR PLAN

MG-M-02

SCALE: 1:100

1 0 1 2 3 4 5 6 7 8 9
1:100 DRAWING NOT TO SCALE

SYMBOL	DESCRIPTION	DATE	APR

DESIGNED BY: F.MAMDOOH
DATE: 06-27-07
DWN BY: A.LATIF
SUBMITTED BY: R. CREWAL CHIEF, DIST. BLDG SYSTEMS
CHK BY: A.MAKRAM
FILE NO.: AF0707MG-M-02

US Army Corps of Engineers Transatlantic Programs Center

ANA REGIONAL BRIGADE
PAKTIKA, AFGHANISTAN
BRIGADE & GARRISON HQ COMPLEX
MAINTENANCE GARAGE (9 BAY)
MEZZANINE FLOOR PLAN

SHEET REFERENCE NUMBER:
MG-M-02

$(getvar, "dwgprefix")$(getvar, "dwgname")$(edtime, 0, MON DD", YYYY - H:MMam/pm)
XX-X-XX

EXHAUST FAN SCHEDULE (EF)

UNIT NUMBER	SERVICE	TYPE	AIR QUANTITY		MINIMUM WHEEL DIAMETER		FAN	STATIC PRESSURE		ELECTRICAL DATA				INTERLOCK WITH	DRIVE TYPE	TEMP. CONTROL DIAGRAM	REMARKS
			CMH	CFM	MM	INCHES	RPM	mmH2O	IN W.G.	H.P.	VOLTS	PHASE	HERTZ				
EF-MG-01	HEAVY BRIGADE BAY 111	R-CTFG-GP	4065	2400	-	-	1620	12	1/2	0.46	220	1	50	-	DIRECT	E5	SEE NOTE 1,2,3,4
EF-MG-02	HEAVY BRIGADE BAY 111	R-CTFG-GP	4065	2400	-	-	1620	12	1/2	0.46	220	1	50	-	DIRECT	E5	SEE NOTE 1,2,3,4
EF-MG-03	HEAVY BRIGADE BAY 111	R-CTFG-GP	4065	2400	-	-	1620	12	1/2	0.46	220	1	50	-	DIRECT	E5	SEE NOTE 1,2,3,4
EF-MG-04	HEAVY BRIGADE BAY 111	R-CTFG-GP	4065	2400	-	-	1620	12	1/2	0.46	220	1	50	-	DIRECT	E5	SEE NOTE 1,2,3,4
EF-MG-05	HEAVY BRIGADE BAY 101	R-CTFG-GP	3390	2000	-	-	1405	12	1/2	.30	220	1	50	-	DIRECT	E5	SEE NOTE 1,2,3,4
EF-MG-06	HEAVY BRIGADE BAY 101	R-CTFG-GP	3390	2000	-	-	1405	12	1/2	.30	220	1	50	-	DIRECT	E5	SEE NOTE 1,2,3,4
EF-MG-07	HEAVY BRIGADE BAY 101	R-CTFG-GP	3390	2000	-	-	1405	12	1/2	.30	220	1	50	-	DIRECT	E5	SEE NOTE 1,2,3,4
EF-MG-08	HEAVY BRIGADE BAY 101	R-CTFG-GP	3390	2000	-	-	1405	12	1/2	.30	220	1	50	-	DIRECT	E5	SEE NOTE 1,2,3,4
EF-MG-09	BATTERY	R-CTFG-EP	610	360	-	-	1100	9.5	3/8	1/4	380	3	50	-	DIRECT	E5	SEE NOTE 1,3,4
EF-MG-10	BATTERY	R-CTFG-EP	610	360	-	-	1100	9.5	3/8	1/4	380	3	50	-	DIRECT	E5	SEE NOTE 1,3,4
EF-MG-11	TOILET	R-CTFG-GP	610	360	-	-	1100	9.5	3/8	1/4	380	3	50	-	DIRECT	E4	SEE NOTE 1,3,4
EF-MG-12	TOILET	R-CTFG-GP	610	360	-	-	1100	9.5	3/8	1/4	380	3	50	-	DIRECT	E4	SEE NOTE 1,3,4
EF-MG-13	HOSE REEL	IL-CTFG	1185	700	-	-	2995	178	7	1-1/2	220	1	50	-	DIRECT	E4	SEE NOTE 1,3,4
EF-MG-14	HOSE REEL	IL-CTFG	1185	700	-	-	2995	178	7	1-1/2	220	1	50	-	DIRECT	E4	SEE NOTE 1,3,4
EF-MG-15	WELDING HOOD	R-CTFG-UB	1700	775	-	-	1370	38	1-1/2	2	220	1	50	-	DIRECT	E4	SEE NOTE 1,3,4
EF-MG-16	WELDING HOOD	R-CTFG-UB	1700	775	-	-	1370	38	1-1/2	2	220	1	50	-	DIRECT	E4	SEE NOTE 1,3,4

1-MANUFACTURER SHALL PROVIDE NECESSARY TRANSFORMERS ON ALL UNITS TO MEET ELECTRICAL REQUIREMENT.
2-INTERLOCK MOTORIZED DAMPER TO OPEN WHEN FAN IS STARTED. (SEE PLAN MG-M-01)
3-SUPPLIED WITH BACK DRAFTDAMPER
4-ALL EXHAUST FANS WITH SINGLE PHASE ARE TO BE PROVIDED WITH FACTORY MOUNTED DISCONNECT SWITCH

FAN SCHEDULE TYPE - LEGEND
(REF. EXHAUST AND SUPPLY FAN SCHEDULES)
R-CTFG-GP

R =ROOF
W =WALL
IL =INLINE
CL =CEILING

GP = GENERAL PURPOSE
EP = EXPLOSION PROOF
DB = DOWN BLAST
UB = UP BLAST
UT = UTILITY SET
CTFG = CENTRIFUGAL
PROP = PROPELLER
TUBA = TUBE AXIAL

SPLIT SYSTEM AIR CONDITIONING UNIT SCHEDULE (SU)

UNIT NUMBER	COOLING CAPACITY TOTAL	AIR QUANTITY		ELECTRICAL DATA			REMARKS
	(BTUH)	CMH	CFM	VOLTS	PHASE	HERTZ	
SU-1	12.000	425	250	220	1	50	HEAT PUMP
SU-2	18.000	885	520	220	1	50	HEAT PUMP

MANUFACTURER SHALL PROVIDE NECESSARY TRANSFORMERS ON ALL UNITS TO MEET ELECTRICAL CONTROL REQUIREMENTS.

CONDENSING UNITS SCHEDULE (CU)

UNIT NUMBER	ELECTRICAL DATA				REMARKS
	KW	VOLTS	PHASE	HERTZ	
CU-1	1.5	220	1	50	--
CU-2	2.0	220	1	50	--

ELECTRIC UNIT HEATER SCHEDULE (UH)

UNIT NUMBER	HEATING CAPACITY TOTAL (KW)	HEATING CAPACITY TOTAL (BTUH)	ELECTRICAL DATA			REMARKS
			VOLTS	PHASE	HERTZ	
UH-2	2.0	6830	220	1	50	PROVIDE WITH INTEGRAL THERMOSTAT.
UH-5	5.0	17,000	380	3	50	PROVIDE WITH INTEGRAL THERMOSTAT.

DIESEL UNIT HEATER SCHEDULE (DH)

UNIT NUMBER	HEATING CAPACITY TOTAL (BTUH)	ELECTRICAL DATA				REMARKS
		POWER (KW)	VOLTS	PHASE	HERTZ	
DH-1	90,000	2.0	220	1	50	

1. THE SERVICE BAYS WILL BE HEATED BY DIESEL FIRED UNIT HEATERS. THE HEATER ARE N.I.C. AND WILL BE PURCHASED AND INSTALLED BY OTHERS

CEILING FAN SCHEDULE (CF)

UNIT NUMBER	QTY.	TYPE (NOTE 1)	FAN DIAMETER	MAX WATTS	ELECTRICAL DATA			REMARKS
					VOLTS	PHASE	HERTZ	
CF-1	4	A	35 in	65	220	1	50	3-SPEED
CF-2	4	A	56 in	65	220	1	50	3-SPEED

NOTES:-
1- (A) WITHOUT LIGHT FIXTURE
2- BOTTOM OF FAN MOUNTING HEIGHT = MINIMUM 2500mm A.F.F
3- PROVIDE WITH REMOTE WALL MOUNTED, ON-OFF SWITCH LOCATED ON ELECTRICAL DRAWINGS.

DRAWING NOT TO SCALE

SYMBOL	DESCRIPTION	DATE	APR

DESIGNED BY: F.MAMDOH
DWN BY: A.LATIF
CHK BY: A.MAKRAM
DATE: 06-27-07
SUBMITTED BY: R.GREWAL
RHEET: BLDG SYSTEMS
FILE NO.: AF0707MG-M-03

US Army Corps of Engineers Transatlantic Programs Center

ANA REGIONAL BRIGADE
PAKTIKA, AFGHANISTAN
BRIGADE & GARRISON HQ COMPLEX
MAINTENANCE GARAGE (9 BAY)
SCHEDULES

SHEET REFERENCE NUMBER:
PJ
MG-M-03

$(getvar, "dwgprefix")$(getvar, "dwgname")$(edtime, 0, MON DD"."YYYY - H:MMam/pm)

EXHAUST FAN SCHEDULE (EF)

UNIT NUMBER	SERVICE	TYPE	AIR QUANTITY		MINIMUM WHEEL DIAMETER		FAN	STATIC PRESSURE		ELECTRICAL DATA				TEMP CONTROL DIAGRAM	INTERLOCK WITH	DRIVE TYPE	REMARKS
			CMH	CFM	MM	INCHES	RPM	mmH20	IN W.G.	H.P.	VOLTS	PHASE	HERTZ				
EF-MG-01	HEAVY BRIGADE BAY 111	R-CTFG-GP	4065	2400	–	–	1620	12	1/2	0.46	220	1	50	E-5	HV-MG-01	DIRECT	SEE NOTE 1,3,4
EF-MG-02	HEAVY BRIGADE BAY 111	R-CTFG-GP	4065	2400	–	–	1620	12	1/2	0.46	220	1	50	E-5	HV-MG-01	DIRECT	SEE NOTE 1,3,4
EF-MG-03	HEAVY BRIGADE BAY 111	W-CTFG-GP	4065	2400	–	–	1620	12	1/2	0.46	220	1	50	E-5	HV-MG-01	DIRECT	SEE NOTE 1,3,4
EF-MG-04	HEAVY BRIGADE BAY 111	R-CTFG-EP	4065	2400	–	–	1620	12	1/2	0.46	220	1	50	E-5	—	DIRECT	SEE NOTE 1,2,3,4
EF-MG-05	HEAVY BRIGADE BAY 111	R-CTFG-GP	3390	2000	–	–	1405	12	1/2	.30	220	1	50	E-5	HV-MG-02	DIRECT	SEE NOTE 1,3,4
EF-MG-06	HEAVY BRIGADE BAY 111	R-CTFG-GP	3390	2000	–	–	1405	12	1/2	.30	220	1	50	E-5	HV-MG-02	DIRECT	SEE NOTE 1,3,4
EF-MG-07	HEAVY BRIGADE BAY 111	R-CTFG-GP	3390	2000	–	–	1405	12	1/2	.30	220	1	50	E-5	HV-MG-02	DIRECT	SEE NOTE 1,3,4
EF-MG-08	HEAVY BRIGADE BAY 111	R-CTFG-GP	3390	2000	–	–	1405	12	1/2	.30	220	1	50	E-5	—	DIRECT	SEE NOTE 1,2,3,4
EF-MG-09	BATTERY	R-CTFG-GP	610	360	–	–	1100	9.5	3/8	1/4	380	3	50	E-5	—	DIRECT	SEE NOTE 1,3,4
EF-MG-10	BATTERY	R-CTFG-GP	610	360	–	–	1100	9.5	3/8	1/4	380	3	50	E-5	—	DIRECT	SEE NOTE 1,3,4
EF-MG-11	TOILET	R-CTFG-GP	610	360	–	–	1100	9.5	3/8	1/4	380	3	50	E-4	—	DIRECT	SEE NOTE 1,3,4
EF-MG-12	TOILET	R-CTFG-GP	610	360	–	–	1100	9.5	3/8	1/4	380	3	50	E-4	—	DIRECT	SEE NOTE 1,3,4
EF-MG-13	HOSE REEL	IL-CTFG	1185	700	–	–	2995	178	7	1-1/2	220	1	50	E-4	—	DIRECT	SEE NOTE 1,3,4
EF-MG-14	HOSE REEL	IL-CTFG	1185	700	–	–	2995	178	7	1-1/2	220	1	50	E-4	—	DIRECT	SEE NOTE 1,3,4
EF-MG-15	WELDING HOOD	R-CTFG-UB	1700	775	–	–	1370	38	1-1/2	2	220	1	50	E-4	—	DIRECT	SEE NOTE 1,3,4
EF-MG-16	WELDING HOOD	R-CTFG-UB	1700	775	–	–	1370	38	1-1/2	2	220	1	50	E-4	—	DIRECT	SEE NOTE 1,3,4

MANUFACTURER SHALL PROVIDE NECESSARY TRANSFORMERS ON ALL UNITS TO MEET ELECTRICAL REQUIREMENT.

NOTES:

NOTE 1. SUPPLIED WITH BACKDRAFT DAMPER

NOTE 2. ALL EXHAUST FANS WITH SINGLE PHASE POWER ARE TO BE PROVIDED WITH A FACTORY MOUNTED DISCONNECT SWITCH.

NOTE 3. FAN SHALL BE AMCA OR VDMA TYPA "A" SPARK RESISTANT AND EXPLOSION PROOF CONSTRUCTION. ALL PARTS EXPOSED TO AIR FLOW SHALL BE COATED WITH EPOXY PAINT.

FAN SCHEDULE TYPE – LEGEND
(REF. EXHAUST AND SUPPLY FAN SCHEDULES)

R-CTFG-GP

R =ROOF
W =WALL
IL =INLINE
CL =CEILING

GP = GENERAL PURPOSE
EP = EXPLOSION PROOF
DB = DOWN BLAST
UB = UP BLAST
UT = UTILITY SET

CTFG = CENTRIFUGAL
PROP = PROPELLER
TUBA = TUBE AXIAL

* RADIAL BLADE CENTRIFUGAL WHEEL, AMCA ARR. 10 INDUSTRIAL BLOWER. SEE TAILPIPE EXH. SPEC.

ELECTRIC UNIT HEATER SCHEDULE (UH)

UNIT NUMBER	HEATING CAPACITY TOTAL (KW)	AIRFLOW CAPACITY TOTAL (BTUH)	ELECTRICAL DATA			REMARKS
			VOLTS	PHASE	HERTZ	
UH-1	2.0	510	220	1	50	

CEILING FAN SCHEDULE (CF)

UNIT NUMBER	QTY.	TYPE (NOTE 1)	FAN DIAMETER	MAX WATTS	ELECTRICAL DATA			REMARKS
					VOLTS	PHASE	HERTZ	
CF-1	4	A	35 in	65	220	1	50	3-SPEED
CF-2	4	A	35 in	65	220	1	50	

NOTES:-

1- (A) WITHOUT LIGHT FIXTURE
2- BOTTOM OF FAN MOUNTING HEIGHT = MINIMUM 2500mm A.F.F
3- PROVIDE WITH REMOTE WALL MOUNTED, ON-OFF SWITCH LOCATED ON ELECTRICAL DRAWINGS.

(PACKAGED) HEATING-VENTILATION UNIT (HV)

UNIT NUMBER	OUTSIDE AIR		FAN SECTION			FILTER SECTION				DIESEL HEATER SECTION			ELECTRICAL DATA			CONTROL DIAGRAM	INTERLOCKED EQUIPMENT	REMARKS
	SUMMER CMH	WINTER CMH	TOTAL CMH	EXTERNAL SP (MM-WG)	KW	FACE VELOCITY MPS	EFF. %	AIR PRESSURE DROP (MM-WG) INT	AIR PRESSURE DROP (MM-WG) FNL	CAPACITY KW	TEMP. RISE °C	EFF. %	VOLTS	PHASE	HERTZ			
HV-MB-01	14,040	5880	14,040	20	7.5	2.54	35	5	25	113	42.4	85	380	3	50	SEE SHT. MG-M-05	EF-MG-1,2,3	NOTE 1,2,4
HV-MB-02	12,00	5200	12,00	20	7.5	2.54	35	5	25	97	42.6	85	380	3	50	SEE SHT. MG-M-05	EF-MG-5,6,7	NOTE 1,3,4

1. MANUFACTURER SHALL PROVIDE NECESSARY TRANSFORMERS ON ALL UNITS TO MEET ELECTRICAL CONTROL REQUIREMENTS.
2. EWF-MG-01 IS INTERLOCKED TO RUN IN HEATING MODE; EF-MG-01, EF-MG-02 AND EF-MG-03 ARE INTERLOCKED TO RUN IN VENTILATION MODE.
3. EWF-MG-01 IS INTERLOCKED TO RUN IN HEATING MODE; EF-MG-05, EF-MG-06 AND EF-MG-07 ARE INTERLOCKED TO RUN IN VENTILATION MODE.
4. PROVIDE 900 LITER STORAGE TANK.

SPLIT SYSTEM AIR CONDITIONING HEAT PUMP SCHEDULE (SU/CU)

UNIT NO.	CAPACITY * (KW)		AIR QUANTITY CMH	ELECTRICAL DATA				REMARKS
	COOLING	HEATING		KW	VOLTS	PH	HZ	
SU-1 CU-1	1.5	1.5	380	0.9	220	1	50	HIGH WALL MOUNTED INDOOR UNIT (1)
SU-2 CU-2	2.6	2.0	615	1.5	220	1	50	HIGH WALL MOUNTED INDOOR UNIT (1)

* MINIMUM EQUIPMENT CAPACITY AS RATED AT 36 °C DB/16.7 °C WB (SUMMER OUTDOOR TEMPERATURE)
AT -12.8 °C DB (WINTER OUTDOOR TEMPERATURE)
AT 2133 M ELEVATION

(1) PROVIDE AUXILIARY ELECTRIC HEATING COIL IN THE INDOOR UNIT TO SUPPLEMENT HEAT PUMP CAPACITY OR TO MEET LOW AMBIENT OPERATIONS IN WINTE. POWER REQUIREMENTS SHALL BE ADJUSTED ACCORDINGLY.

DRAWING NOT TO SCALE

SYMBOL	DESCRIPTION	DATE	APR

DESIGNED BY: F.MAKKOOH
DATE: 06-27-07
DWN BY: A.LATIF
SUBMITTED BY: R. CREWAL CHIEF, BLDG SYSTEMS
CHK BY: A.MAKRAM
FILE NO.: AF0707MG-M-04

US Army Corps of Engineers Transatlantic Programs Center

ANA REGIONAL BRIGADE
PAKTIKA, AFGHANISTAN
BRIGADE & GARRISON HQ COMPLEX
MAINTENANCE GARAGE (9 BAY)
SCHEDULES

SHEET REFERENCE NUMBER:
PJ
MG-M-04

$(getvar, "dwgprefix")$(getvar, "dwgname")$(edtime, O, MON DD"", YYYY - H:MMam/pm)

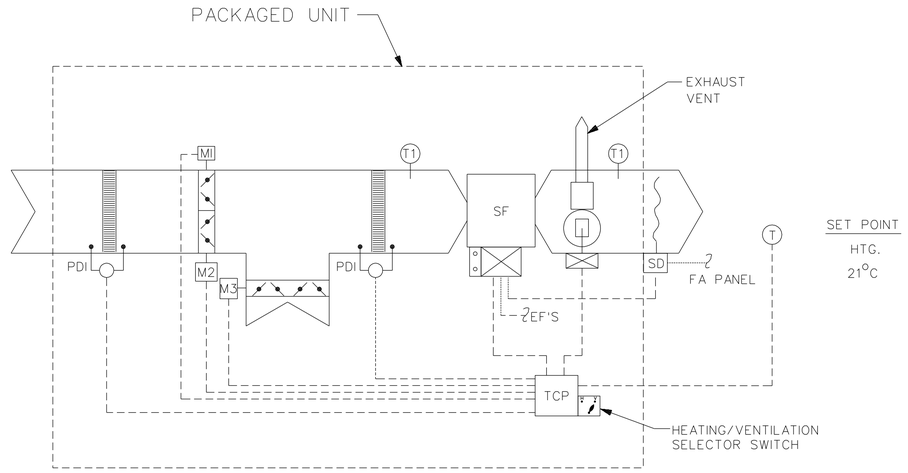

TEMPERATURE CONTROL DIAGRAM
(HV-MG-01, HV-MG-02)

PACKAGED HEATING-VENTILATION UNIT -SEQUENCE OF OPERATION

START-UP
THE SUPPLY FAN (SF) SHALL BE STARTED MANUALLY BY PLACING THE HAND-OFF-AUTO SWITCH AT THE CONTROL PANEL IN THE HAND POSITION. IN THE AUTO POSITION A PROGRAMMABLE TIME CLOCK SHALL START/STOP THE FAN.

OPERATING MODES
HEATING OR VENTILATION MODE SELECTION SHALL BE CONTROLLED OFF A HEATING-VENTILATION SELECTION SWITCH ON THE CONTROL PANEL. THE UNIT SHALL OPERATE AS A 100% OA VENTILATION UNIT BY PLACING THE MODE SWITCH IN THE VENTILATION MODE. IN THE HEATING MODE THE UNIT SHALL PROVIDE MINIMUM FRESH AIR VENTILATION AND EXHAUST MAKE-UP AIR.

DAMPERS
VENTILATION MODE: THE OUTSIDE AIR (OA) DAMPER M1 AND M2 SHALL BE INTERLOCKED TO OPEN WHEN THE FAN IS ENERGIZED AND CLOSE WHEN FAN IS DEENERGIZED. THE RETURN AIR DAMPER M3 SHALL STAY CLOSED.
HEATING MODE: THE OUTSIDE AIR DAMPER (M1) AND RETURN AIR DAMPER (M3) SHALL OPEN WHEN THE FAN IS ENERGIZED AND CLOSE WHEN THE FAN IS DEENERGIZED. OA DAMPER M2 SHALL STAY CLOSED.

FILTER
PRESSURE DIFFERENTIAL INDICATOR (PDI) PROVIDES LOCAL INDICATION OF PRESSURE DROP ACROSS THE FILTER. ON A RISE IN PRESSURE DROP TO ITS SET POINT, PRESSURE DIFFERENTIAL SWITCH SHALL TURN ON THE DIRTY FILTER ALARM LIGHT AT THE CONTROL PANEL.

TEMPERATURE CONTROL
HEATING (WINTER) MODE: THE DIESEL OIL HEATER (DH) SHALL BE STAGED BY A SPACE THERMOSTAT (T) TO CONTROL THE SUPPLY AIR TEMPERATURE OFF THE UNIT.
VENTILATION (SUMMER) MODE: HEATER CONTROLS SHALL BE LOCKED OUT DURING THE SUMMER MODE.
FAN INTERLOCKS
THE SMOKE DETECTOR (SD) SHALL BE INTERLOCKED TO STOP THE SUPPLY FAN (SF) IN THE EVENT OF SMOKE IN THE SUPPLY DUCT. THE SMOKE DETECTOR SHALL BE CONNECTED TO THE BUILDING FIRE ALARM PANEL.

THE EXHAUST FANS (EF) INDICATED IN THE HCU UNIT SCHEDULE SHALL BE INTERLOCKED TO RUN WITH THE SUPPLY FAN (SF).

DRAWING NOT TO SCALE

SYMBOL	DESCRIPTION	DATE	APR

DESIGNED BY: F.MAMDOH
DATE: 06-27-07
DWN BY: A.LATIF
SUBMITTED BY: R. CREWAL CHIEF, PDT BLDG SYSTEMS
CHK BY: A.MAKRAM
FILE NO.: AF0707MG-M-05

US Army Corps of Engineers Transatlantic Programs Center

ANA REGIONAL BRIGADE
PAKTIKA, AFGHANISTAN
BRIGADE & GARRISON HQ COMPLEX
MAINTENANCE GARAGE (9 BAY)
TEMPERATURE CONTROL DIAGRAMS

SHEET REFERENCE NUMBER:
PJ
MG-M-05

$(getvar, "dwgprefix")$(getvar, "dwgname")$(edtime, 0, MON DD",", YYYY - HH:MMam/pm)

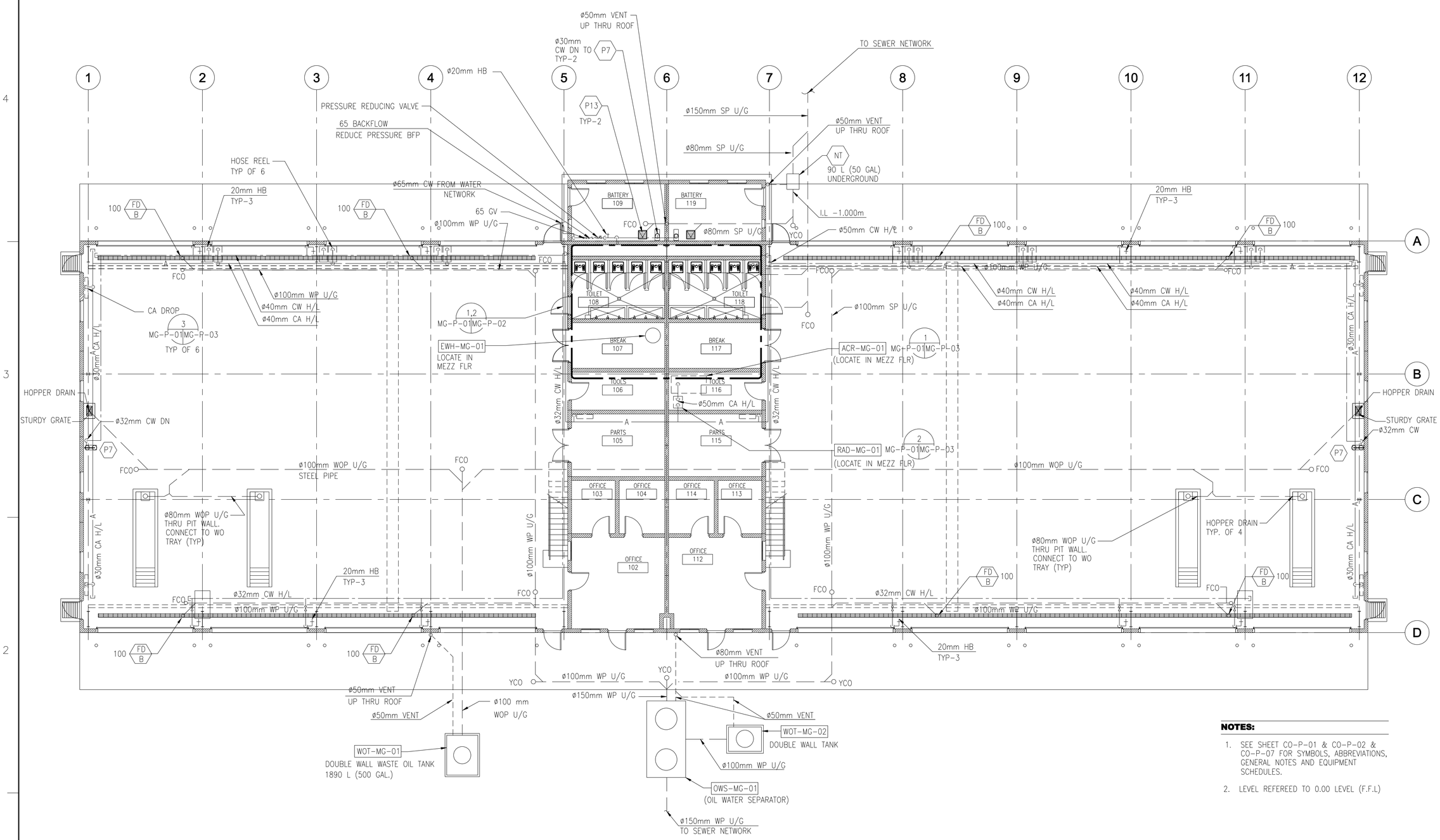

1 PLUMBING FLOOR PLAN

MG-P-01 SCALE: 1:100

NOTES:

1. SEE SHEET CO-P-01 & CO-P-02 & CO-P-07 FOR SYMBOLS, ABBREVIATIONS, GENERAL NOTES AND EQUIPMENT SCHEDULES.
2. LEVEL REFEREED TO 0.00 LEVEL (F.F.L)

1 0 1 2 3 4 5 6 7 8 9
1:100

DRAWING NOT TO SCALE

SYMBOL	DESCRIPTION	DATE	APR

DESIGNED BY: HANAAN E.
DATE: 06-27-07
DWN BY: HANAA M.
SUBMITTED BY: R. GREWAL CHIEF, DIV. BLDG SYSTEMS
CHK BY: G.TAWAB
FILE NO.: AF0707MG-P-01

US Army Corps of Engineers Transatlantic Programs Center

ANA REGIONAL BRIGADE
PAKTIKA, AFGHANISTAN
BRIGADE & GARRISON HQ COMPLEX
MAINTENANCE GARAGE (9 BAY)
PLUMBING FLOOR PLAN

SHEET REFERENCE NUMBER:
PJ
MG-P-01

$(getvar, "dwgprefix")$(getvar, "dwgname")$(edtime, 0, MON DD", YYYY - HHMMam/pm)

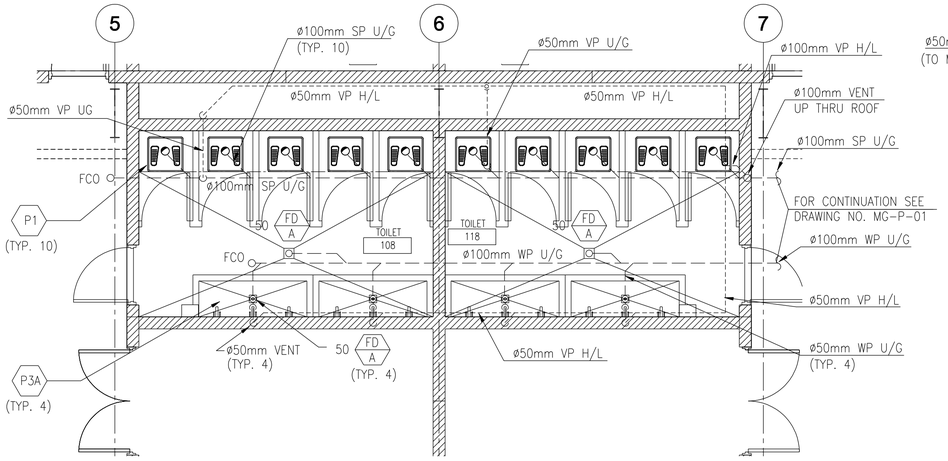

1 DRAINAGE PIPING PLAN

MG-P-02 SCALE: 1:50

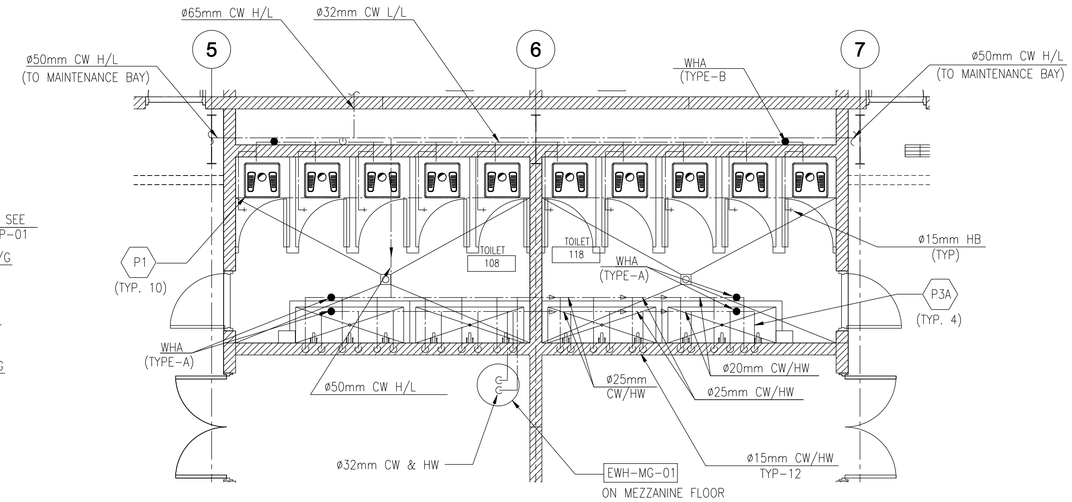

NOTE: SEE DIAGRAM BELOW FOR COMPLETE PIPE SIZES.

2 COLD AND HOT WATER PIPING PLAN

MG-P-02 SCALE: 1:50

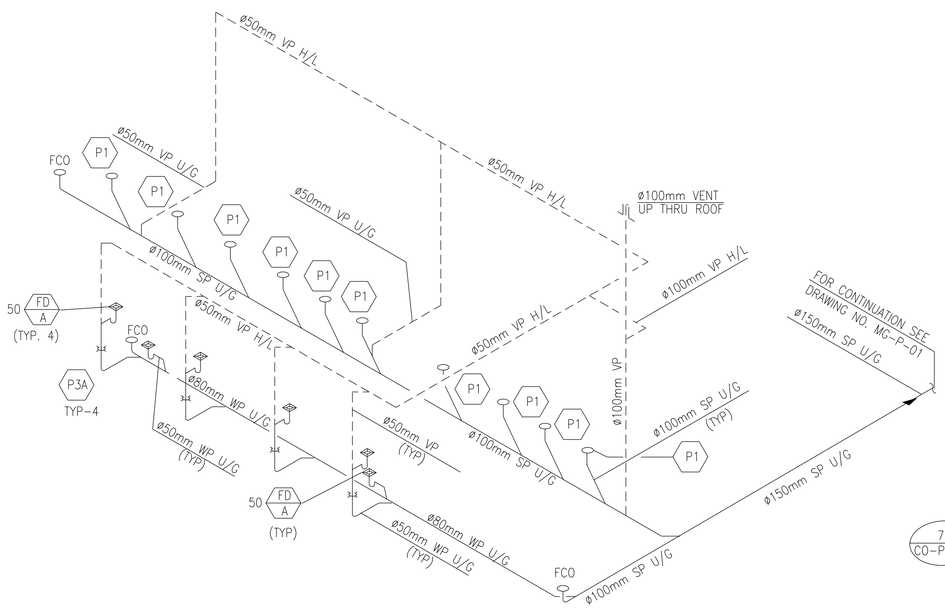

3 DRAINAGE RISER DIAGRAM

MG-P-02 SCALE: N.T.S

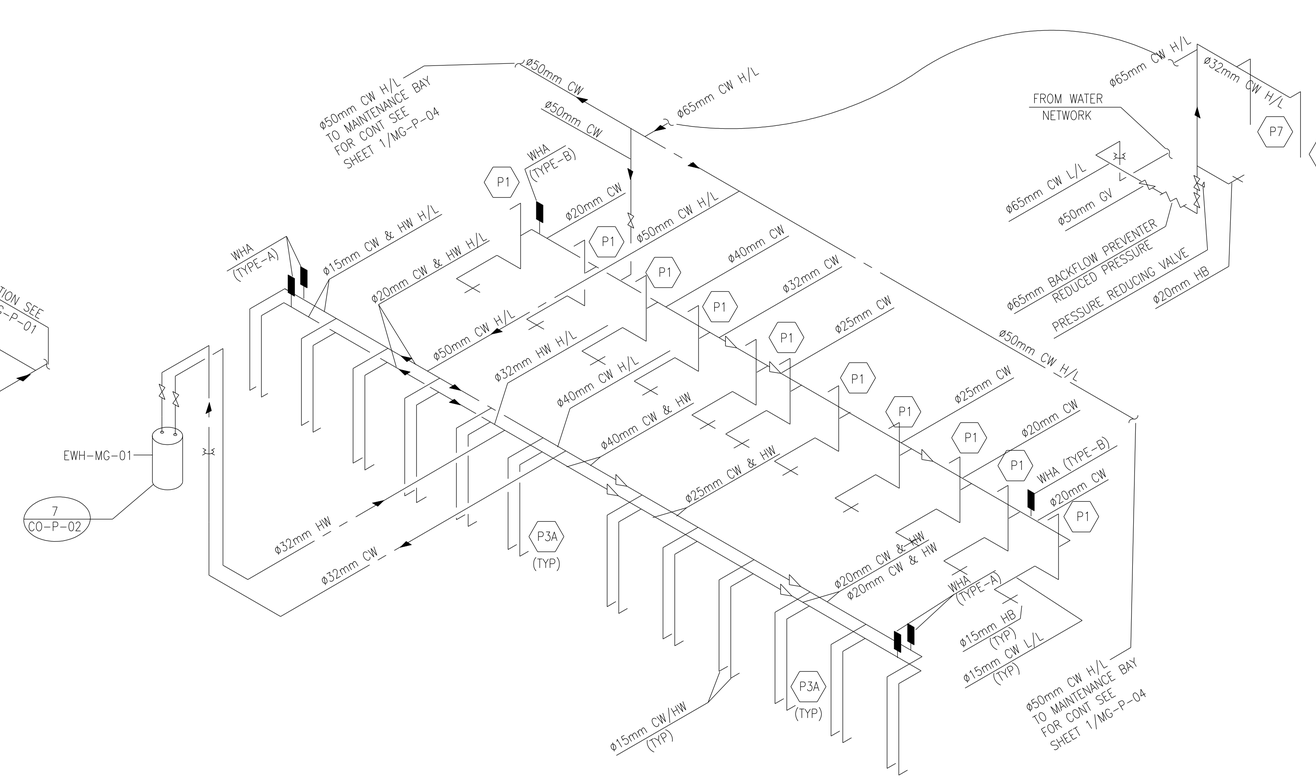

4 COLD AND HOT WATER RISER DIAGRAM

MG-P-02 SCALE: N.T.S

1:50 DRAWING NOT TO SCALE

SYMBOL	DESCRIPTION	DATE	APR

DESIGNED BY: HANXX E.
DWN BY: HANXX M.
CHK BY: G.TAWAB
DATE: 06-27-07
SUBMITTED BY: R. GREWAL
CHIEF, BLDG SYSTEMS
FILE NO.: AF070 7MG-P-02

US Army Corps of Engineers Transatlantic Programs Center

ANA REGIONAL BRIGADE
PAKTIKA, AFGHANISTAN
BRIGADE & GARRISON HQ COMPLEX
MAINTENANCE GARAGE (9 BAY)
ENLARGED PLANS AND RISER DIAGRAMS

SHEET REFERENCE NUMBER:
PJ
MG-P-02

$(getvar, "dwgprefix")$(getvar, "dwgname")$(edtime, 0, MON DD"", YYYY - H:MMam/pm)

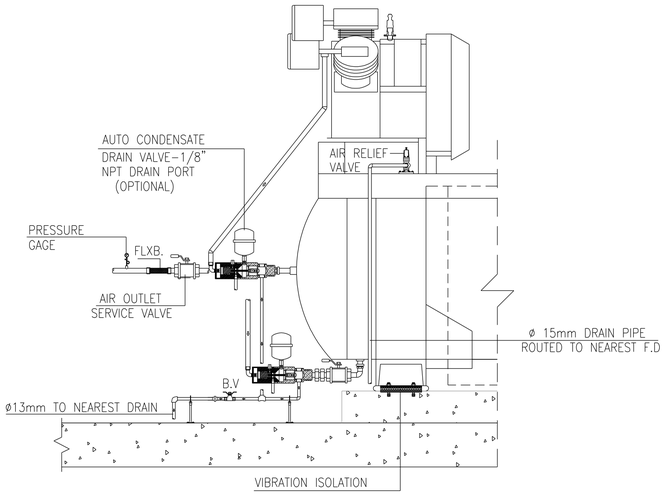

1 COMPRESSOR DRAIN DETAIL

MG-P-03 SCALE: N.T.S

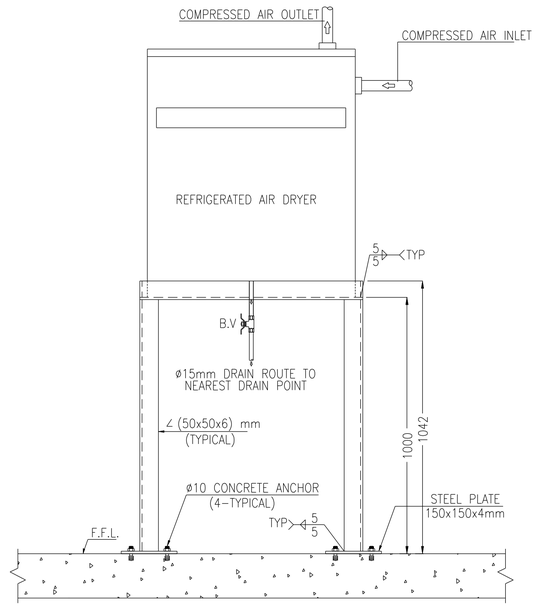

2 COMPRESSED AIR DRYER SUPPORT

MG-P-03 SCALE: N.T.S

NOTE:

1. SEE SHEET CO-P-01 & CO-P-02 & CO-P-07 FOR SYMBOLS, ABBREVIATIONS, GENERAL NOTES AND EQUIPMENT SCHEDULES.

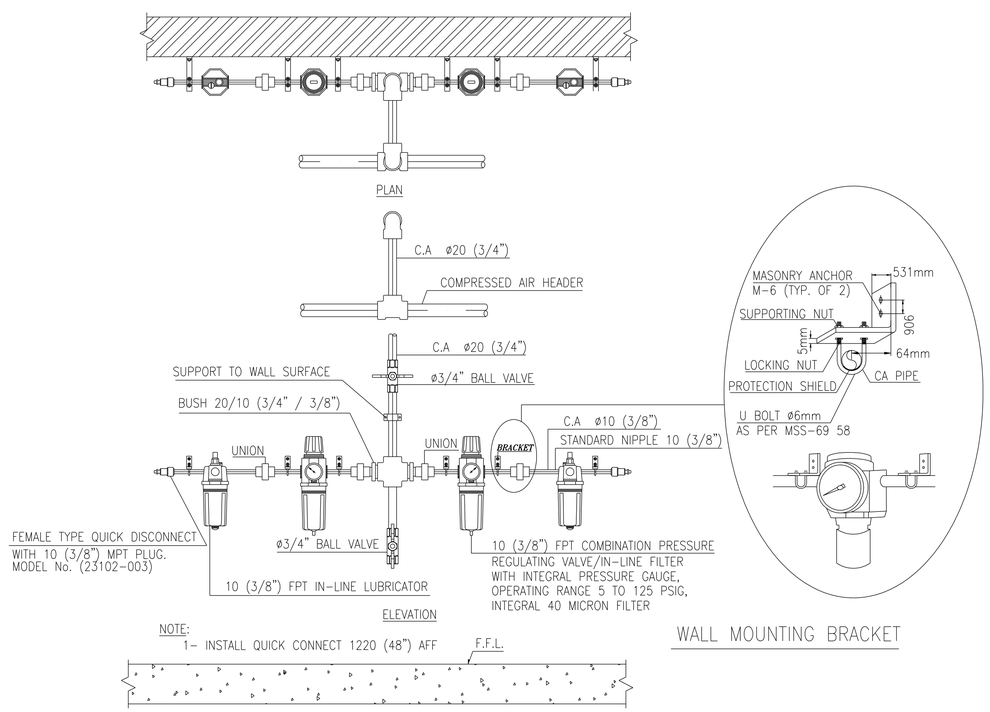

3 COMPRESSED AIR DROP

MG-P-03 SCALE: N.T.S

NOTES:

1. PIPING AND VALVES SAME MATERIAL AS SPEC. FOR MAIN LINE. 15 (1/2")
2. TEST TEE WITH PLUGGED BRANCH 8 (1/4") MIN. SIZE.
3. WELD-O-LET OR THREAD-O-LET AS SPECIFIED FOR MAIN LINE.
4. REDUCE AS REQUIRED TO FIT PRESSURE GAUGE.

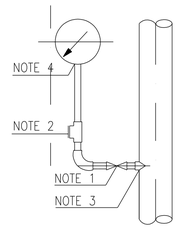

4 LINE MOUNTED ON VERTICAL PIPE

MG-P-03 SCALE: N.T.S

DRAWING NOT TO SCALE

SYMBOL	DESCRIPTION	DATE	APR

DESIGNED BY: HANAN E. | DATE: 06-27-07
DWN BY: HANY M. | SUBMITTED BY: R. GREWAL, CHIEF, BLDG SYSTEMS
CHK BY: G.TAWAB | FILE NO.: AF0707BH-P-01

US Army Corps of Engineers Transatlantic Programs Center

ANA REGIONAL BRIGADE
PAKTIKA, AFGHANISTAN
BRIGADE & GARRISON HQ COMPLEX
MAINTENANCE GARAGE (9 BAY)
COMPRESSED AIR SYSTEM DETAILS

SHEET REFERENCE NUMBER:
PJ
MG-P-03

$(getvar, "dwgprefix")$(getvar, "dwgname")$(edtime, O, MON DD",", YYYY - HHMMam/pm)

NOTE:

1. SEE SHEET CO-P-01 & CO-P-02 & CO-P-07 FOR SYMBOLS, ABBREVIATIONS, GENERAL NOTES AND EQUIPMENT SCHEDULES.

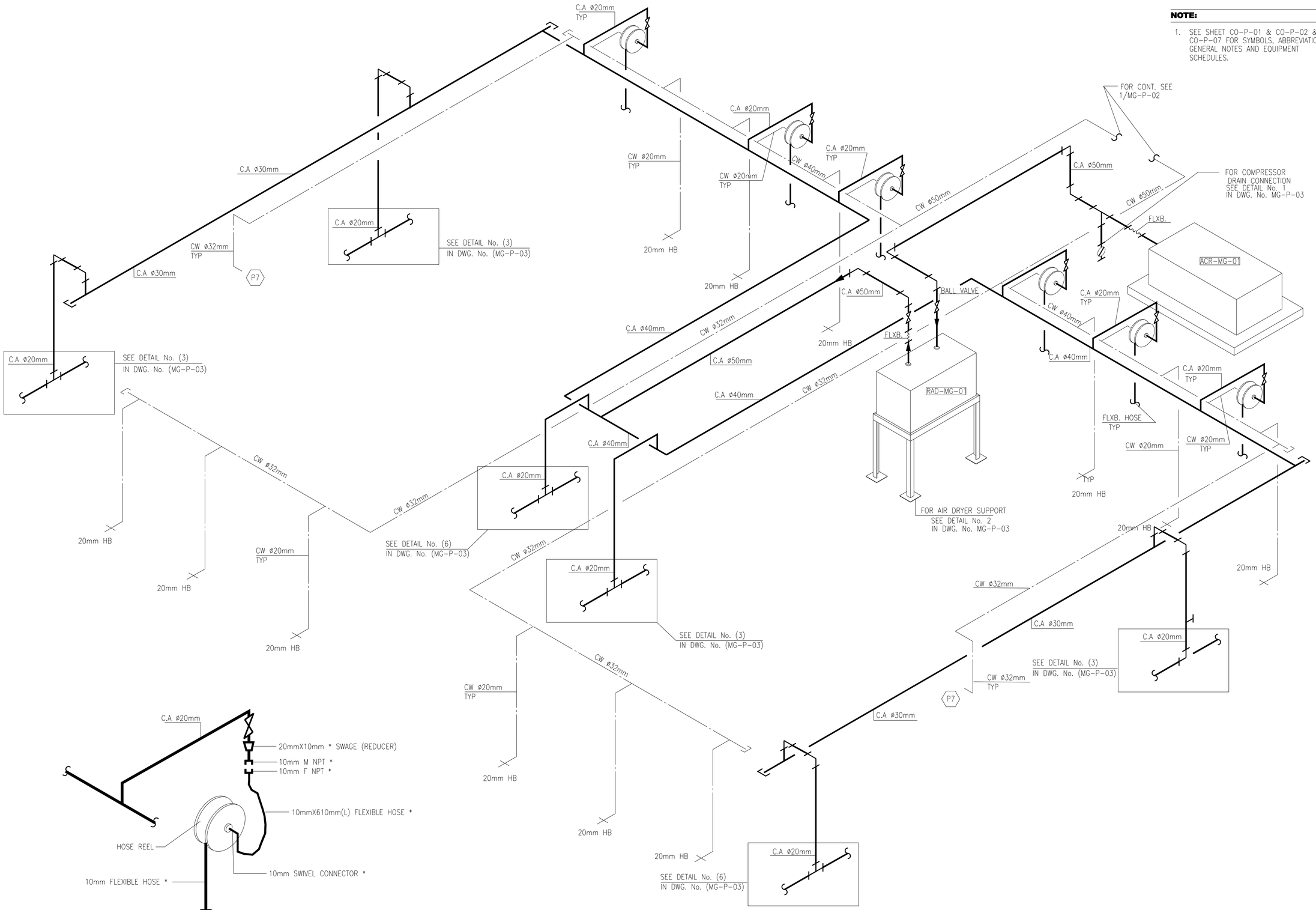

* SIZE TO MATCH REEL HOSE SIZE BEING USED.

1 HOSE REEL RISER DIAGRAM

MG-P-04 SCALE: N.T.S

2 COMPRESSED AIR AND WATER SUPPLY RISER DIAGRAM

MG-P-04 SCALE: N.T.S

DRAWING NOT TO SCALE

SYMBOL	DESCRIPTION	DATE	APR

DESIGNED BY: HANNY. E. DATE: 06-27-07
DWN BY: HANNY. M. SUBMITTED BY: R. CRENWAL CHIEF, BLDG SYSTEMS
CHK BY: G.TAWAB FILE NO.: AF0707 BH-P-01

US Army Corps of Engineers Transatlantic Programs Center

ANA REGIONAL BRIGADE
PAKTIKA, AFGHANISTAN
BRIGADE & GARRISON HQ COMPLEX
MAINTENANCE GARAGE (9 BAY)
COMPRESSED AIR SYSTEM AND WATER SUPPLY RISER DIAGRAM

SHEET REFERENCE NUMBER:
PJ
MG-P-04

$(getvar, "dwgprefix")$(getvar, "dwgname")$(edtime, 0, MON DD", " YYYY - HHMMam/pm)

TOILET/SHOWER PANEL PP

((BUILDING#315,500))

AIC: 25KA

350AT/350AF MCB

MLO

VOLTAGE 380/220V, 3PH, 5W, 50HZ

FEED TOP

MOUNTING SURFACE

LOCATION HEAVY BRIGTE – BAY 111

400AF/400AT

DESCRIPTION	LOAD (VA) A	B	C	AMP	POLE	CKT	A	B	C	CKT	POLE	AMP	LOAD (VA) A	B	C	DESCRIPTION
	1667					1				2	1	20	2000			DIESEL UNIT HEATER DH01
RM 118 UH-5		1667		20	3	3				4	1	20		2000		DIESEL UNIT HEATER DH01
			1667			5				6	1	20			2000	DIESEL UNIT HEATER DH01
	1667					7				8	1	20	2000			DIESEL UNIT HEATER DH01
RM 108 UH-5		1667		20	3	9				10	1	20		2000		DIESEL UNIT HEATER DH01
			1667			11				12	1	20			2000	DIESEL UNIT HEATER DH01
	8000					13				14	1	20	2000			DIESEL UNIT HEATER DH01
10 TON CRAIN		8000		50	3	15				16	1	20		2000		DIESEL UNIT HEATER DH01
			8000			17				18	1	20			2000	DIESEL UNIT HEATER DH01
	3000					19				20	1	20	1340			RAD-MG-01
EWH-MG-01		3000		25	3	21				22				3000		
			3000			23				24	3	20			3000	WELDING RECEPTACLE
	24000					25				26			3000			
SPARE		24000		30	3	27				28				3000		
			24000			29				30	3	20			3000	WELDING RECEPTACLE
						31				32			3000			
ACR-MG-01				25	3	33				34	1	20				SPARE
						35				36	1	20				SPARE
	10110					37				38			15280			
PANEL LP1		10070		100	3	39				40	3	100		14430		PANEL PP1
			9625			41				42					14485	
SUB-TOTALS=	26944	26904	26459										28620	26430	26485	= SUB-TOTALS

	V A	AMPS
TOTAL PHASE A=	55564	252.56
TOTAL PHASE B=	53334	242.42
TOTAL PHASE C=	52944	240.65
TOTAL CONNECTED LOAD	161.84	KVA
DEMAND FACTOR	0.94	
DEMAND LOAD	152.13	KVA
20% FUTURE LOAD	30.42	KVA
TOTAL LOAD	182.56	KVA
TOTAL AMPERE	277.36	AMP

TOILET/SHOWER PANEL PP1

(BUILDING#315,500
)

AIC: 25KA

100A MCB

MLO

VOLTAGE 380/220V, 3PH, 5W, 50HZ

FEED BOTTOM

MOUNTING SURFACE

LOCATION HEAVY BRIGTE – BAY 111

DESCRIPTION	LOAD (VA) A	B	C	AMP	POLE	CKT	A	B	C	CKT	POLE	AMP	LOAD (VA) A	B	C	DESCRIPTION
EF-MG-02 & M.D	660			20	1	1				2	1	20	660			EF-MG-03 & M.D
EF-MG-04 & M.D		660		20	1	3				4	1	20		660		EF-MG-01 & M.D
EF-MG-05 & M.D			500	20	1	5				6	1	20			500	EF-MG-06 & M.D
EF-MG-07 & M.D	500			20	1	7				8	1	20	500			EF-MG-08 & M.D
SPARE		800		20	1	9				10	1	20				SPARE
SPARE			800	20	1	11				12	1	20				SPARE
	5000			30	1	13				14	1	20				SPARE
2 TON CRANE		5000		30	1	15				16	1	20				SPARE
			5000	30	1	17				18	1	20			2000	RM 107 UH-2
RM 113 SU-1	1875			20	1	19				20	1	20	2000			RM 117 UH-2
RM 114 SU-1		1875		20	1	21				22	1	20		1875		RM 103 SU-1
RM 102 SU-2			2500	20	1	23				24	1	20				SPARE
SPARE				20	1	25				26	1	20	2500			RM 112 SU-2
SPARE				20	1	27				28	1	20				SPARE
EF-MG-13			1500	20	1	29				30	1	20				SPARE
EF-MG-14	1500			20	1	31				32	1	20				SPARE
EF-MG-15		2000		20	1	33				34	1	20		200		RM 102,112 CEILING FAN
EF-MG-16			2000	20	1	35				36	1	20			200	RM 107,117 CEILING FAN
	85					37				38	1	20				SPARE
EF-MG-11		85		20	3	39				40	1	20		1875		RM 104 SU-1
			85			41				42	1	20				SPARE
SUB-TOTALS=	9620	9620	11585										5660	4810	2900	= SUB-TOTALS

	V A	AMPS
TOTAL PHASE A=	15280	69.45
TOTAL PHASE B=	14430	65.6
TOTAL PHASE C=	14485	65.8
TOTAL CONNECTED LOAD	44.2	KVA
DEMAND FACTOR	0.86	
DEMAND LOAD	38	KVA
20% FUTURE LOAD	7.6	KVA
TOTAL LOAD	45.6	KVA
TOTAL AMPERE	69.2	AMP

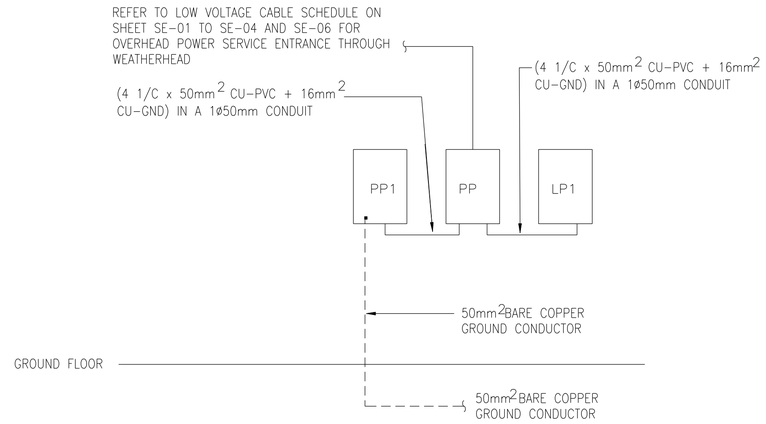

1 POWER RISER DIAGRAM

MG-E-01 SCALE: N.T.S.

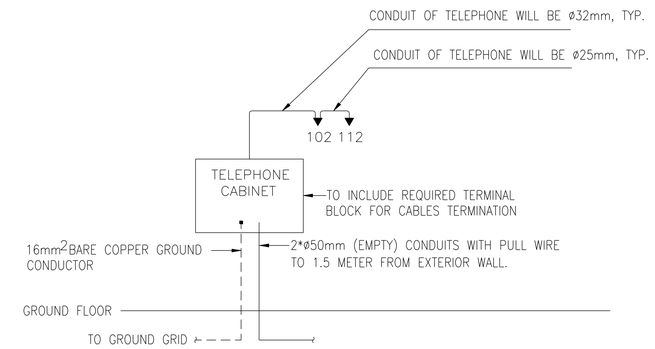

2 TELEPHONE RISER DIAGRAM

MG-E-01 SCALE: N.T.S.

NOTES:

1. SEE SHEET CO-E-01 FOR SYMBOLS ABBREVIATIONS AND GENERAL NOTES
2. SEE SHEET CO-E-02 FOR BRANCH CIRCUIT WIRE SCHEDULE.

DRAWING NOT TO SCALE

SYMBOL	DESCRIPTION	DATE	APR

DESIGNED BY: XXX
DWN BY: XXX
CHK BY: XXX
DATE: 06-27-07
SUBMITTED BY: SYED ENAYATULLA CHIEF PDT BLDG SYSTEMS
FILE NO.: AF0707 MG-E-01

US Army Corps of Engineers Transatlantic Programs Center

ANA REGIONAL BRIGADE
PAKTIKA, AFGHANISTAN
BRIGADE & GARRISON HQ COMPLEX
MAINTENANCE GARAGE (9 BAY)

PANEL SCHEDULE AND RISER DIAGRAMS

SHEET REFERENCE NUMBER:
PJ
MG-E-01

$(getvar, "dwgprefix")$(getvar, "dwgname")$(edtime, 0, MON DD",", YYYY - HH:MMam/pm)

PANEL LP1

(BUILDING#315,500,)

AIC: 25KA

100A MLO

VOLTAGE 380/220V, 3PH, 5W, 50HZ

FEED BOTTOM

MOUNTING FLUSH

LOCATION HEAVY BRIGT-BAY 111

DESCRIPTION	A	B	C	AMP	POLE	CKT	A	B	C	CKT	POLE	AMP	A	B	C	DESCRIPTION
	LOAD (VA)												LOAD (VA)			
LTG RM 102,103,104,112,113,114	2000			20	1	1				2	1	20				SPARE
LTG RM 109,115,116,117,118,119		2400		20	1	3				4	1	20		2815		LTG RM 101
LTG PITS			400	20	1	5				6	1	20			2815	LTG RM 111
SPARE				20	1	7				8	1	20	2815			LTG RM 111
LTG 121,120		2000		20	1	9				10	1	20		400		RECP MEZZANINE
SPARE				20	1	11				12	1	20			400	RM 103,104,113,114,CEILING FAN
EMERGENCY LTG RM 101	140			20	1	13				14	1	20	1600			RECP 102,103,104,112,113,114
						15				16	1	20				SPARE
SPARE				30	3	17				18	1	20			1400	RECP 101
						19				20	1	20	1800			RECP 111,119,109
LTG PITS		400		20	1	21				22	1	20				SPARE
EMERGENCY LTG RM 111			140	20	1	23				24	1	20			2815	LTG RM 101
RECP 108,109	400			20	1	25				26	1	20	85			
SPARE				20	1	27				28	1	20		85		EF-MG-12
SPARE				20	1	29				30	1	20			85	
	85					31				32		20	85			
EF-MG-09 & MD		85		20	3	33				34	3	20		85		EF-MG-10 & MD
			85			35				36		20			85	
FOR FUTURE SELF SMOKE DETECTOR	1100			20	1	37				38	1	20				SPARE
FOR FUTURE SELF SMOKE DETECTOR		1200		20	1	39				40	1	20		600		FOR FUTURE SELF SMOKE DETECTOR
FOR FUTURE SELF SMOKE DETECTOR			1400	20	1	41				42	1	20				SPACE
SUB-TOTALS=	3725	6085	2025										6385	3985	7600	= SUB-TOTALS

	V A	AMPS
TOTAL PHASE A=	10110	46
TOTAL PHASE B=	10070	45.7
TOTAL PHASE C=	9625	43.75
TOTAL CONNECTED LOAD	29.8	KVA
DEMAND FACTOR	1.0	
DEMAND LOAD	29.8	KVA
20% FUTURE LOAD	6	KVA
TOTAL LOAD	35.8	KVA
TOTAL AMPERE	54.4	AMP

DRAWING NOT TO SCALE

SYMBOL	DESCRIPTION	DATE	APR

DESIGNED BY: XXX
DWN BY: XXX
CHK BY: XXX
DATE: 06-27-07
SUBMITTED BY: SYED ENAYATULLA CHIEF PROJ BLDG SYSTEMS
FILE NO.: AF0707MG-E-02

US Army Corps of Engineers Transatlantic Programs Center

ANA REGIONAL BRIGADE
PAKTIKA, AFGHANISTAN
BRIGADE & GARRISON HQ COMPLEX
MAINTENANCE GARAGE (9 BAY)
PANEL SCHEDULE

SHEET REFERENCE NUMBER:
PJ
MG-E-02

$(getvar, "dwgprefix")$(getvar, "dwgname")$(edtime, 0, MON DD"" YYYY - HHMMam/pm)

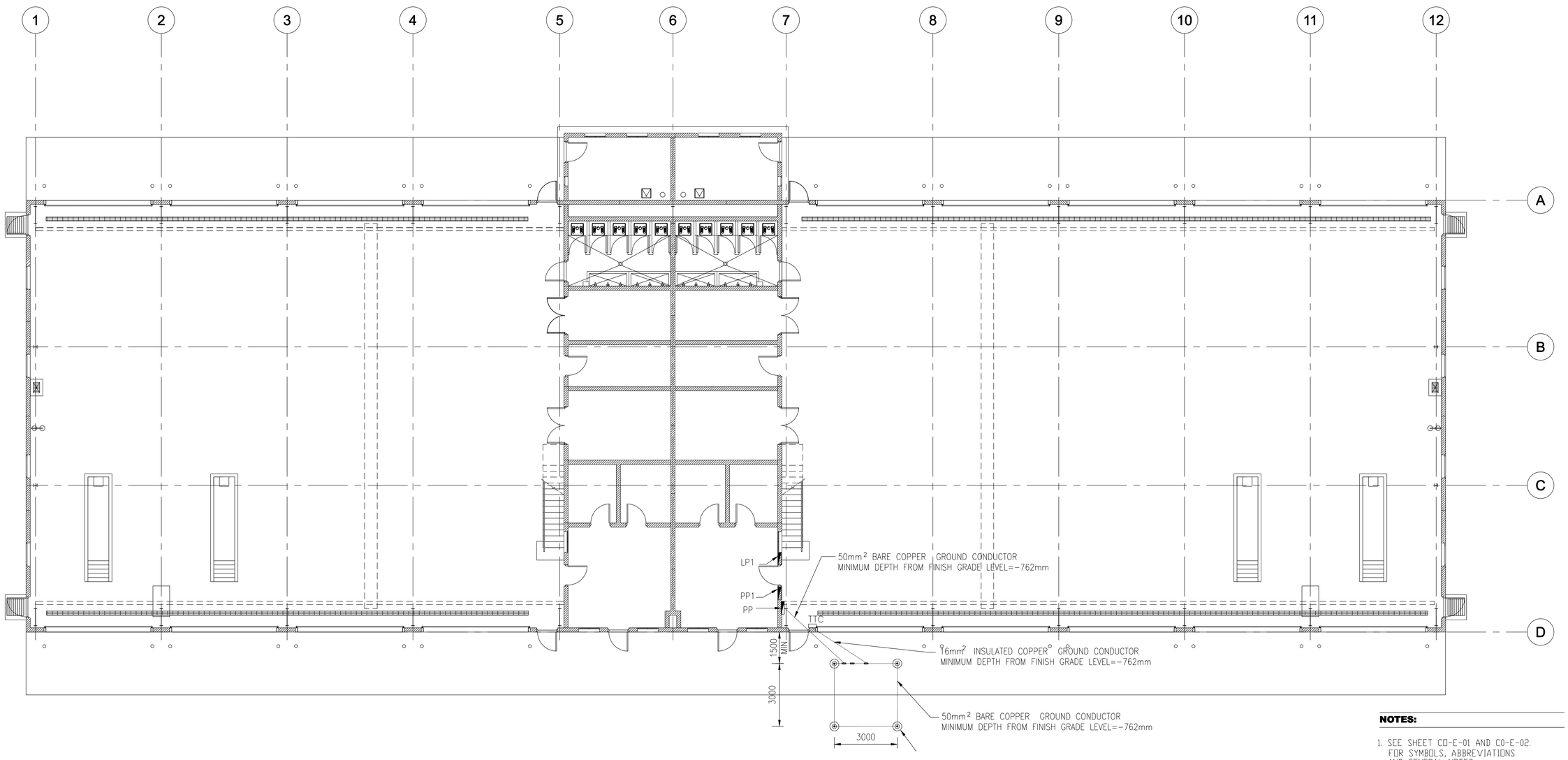

1 GROUNDING PLAN

MG-E-03

SCALE: 1:100

NOTES:

1. SEE SHEET C0-E-01 AND C0-E-02. FOR SYMBOLS, ABBREVIATIONS AND GENERAL NOTES.
2. SEE SHEET C0-E-03 TO C0-E-05 FOR STANDARD DETAILS.

1 0 1 2 3 4 5 6 7 8 9

1:100 DRAWING NOT TO SCALE

SYMBOL	DESCRIPTION	DATE	APR

DESIGNED BY: XXX
DATE: 06-27-07
DWN BY: XXX
SUBMITTED BY: SYED ENAYATULLA CHIEF PDT. BLDG SYSTEMS
CHK BY: XXX
FILE NO.: AF0707MG-E-03

US Army Corps of Engineers Transatlantic Programs Center

ANA REGIONAL BRIGADE
PAKTIKA, AFGHANISTAN
BRIGADE & GARRISON HQ COMPLEX
MAINTENANCE GARAGE (9 BAY)

GROUNDING PLAN

SHEET REFERENCE NUMBER:
PJ
MG-E-03

$(getvar, "dwgprefix")$(getvar, "dwgname")$(edtime, 0, MON DD", YYYY - HHMMam/pm)

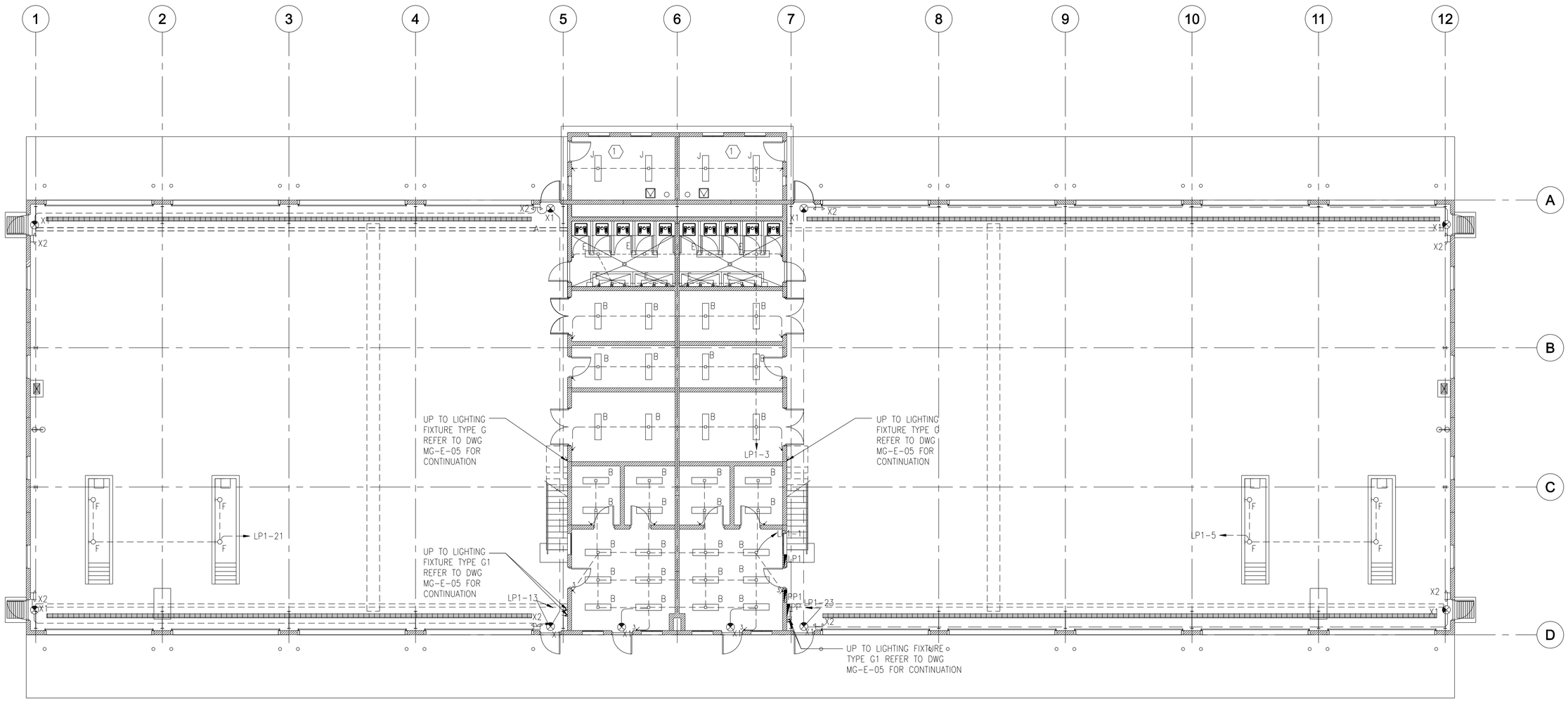

1 GROUND FLOOR LIGHTING PLAN

MG-E-03 SCALE: 1:100

KEY NOTS:

1. ALL MATERIAL IN THIS ROOM SHALL BE CLASS I DIV. I AND SHALL BE INSTALLED IN ACCORDANCE WITH N.E.C.

NOTES:

1. SEE SHEET C0-E-01 AND C0-E-02. FOR SYMBOLS, ABBREVIATIONS AND GENERAL NOTES.
2. SEE SHEET C0-E-03 TO C0-E-05 FOR STANDARD DETAILS.
3. SEE SHEETS MG-E-01 AND MG-E-02 FOR PANEL SCHEDULE AND RISER DIAGRAMS FOR POWER SYSTEM.

1:100 DRAWING NOT TO SCALE

SYMBOL	DESCRIPTION	DATE	APR

DESIGNED BY: XXX
DWN BY: XXX
CHK BY: XXX
DATE: 06-27-07
SUBMITTED BY: SHED ENAYATULLA CHIEF PDT BLDG SYSTEMS
FILE NO.: AF0707MG-E-04

US Army Corps of Engineers Transatlantic Programs Center

ANA REGIONAL BRIGADE
PAKRIKA, AFGHANISTAN
BRIGADE & GARRISON HQ COMPLEX
MAINTENANCE GARAGE (9 BAY)

LIGHTINGING PLAN

SHEET REFERENCE NUMBER:
PJ
MG-E-04

$(getvar, "dwgprefix")$(getvar, "dwgname")$(edtime, 0, MON DD"", YYYY - HH:MMam/pm)

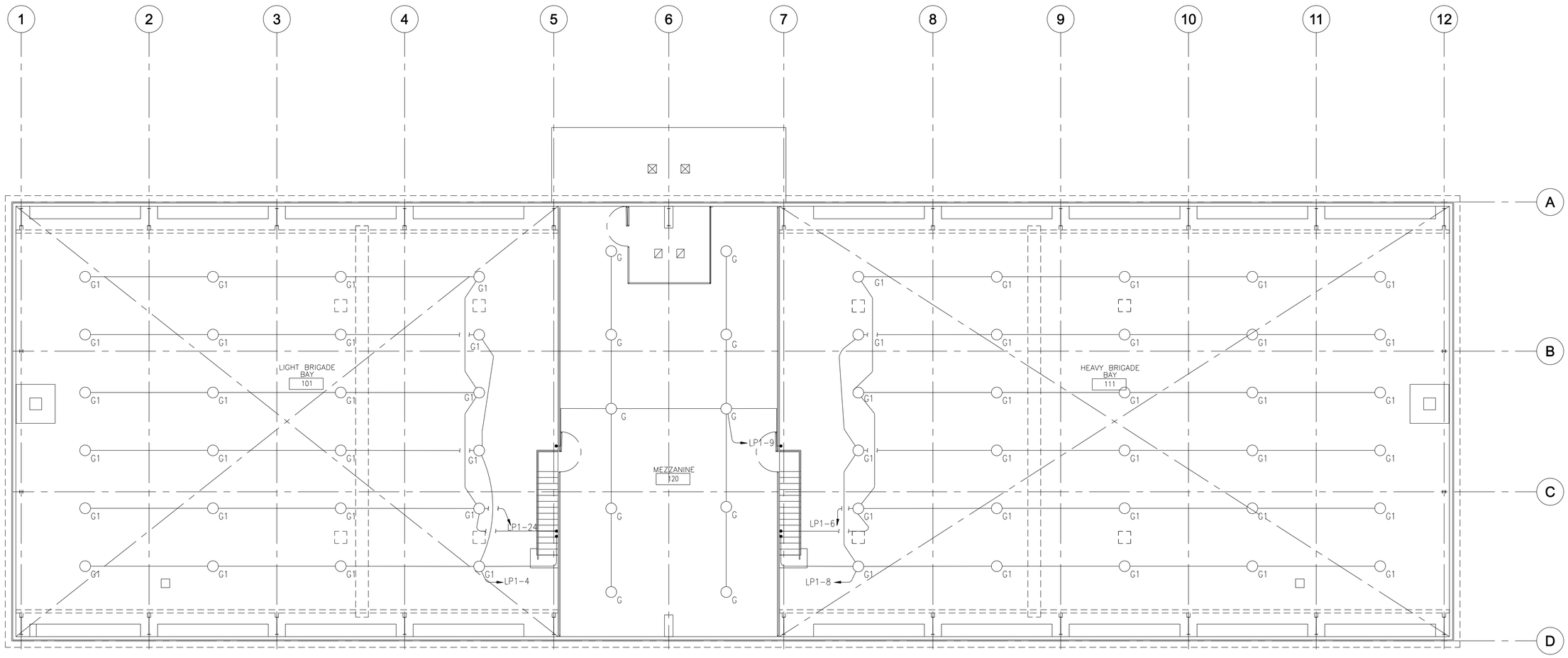

1 MEZZANINE FLOOR PLAN

MG-E-05

SCALE: 1:100

NOTES:

1. SEE SHEET CO-E-01 AND CO-E-02 FOR SYMBOLS, ABBREVIATIONS,AND GENERAL NOTES
2. SEE SHEETS CO-E-03 TO CO-E-05 FOR STANDARD DETAILS
3. SEE SHEETS MG-E-01 AND MG-E-02 FOR PANEL SCHEDULE AND RISER DIAGRAMS FOR POWER SYSTEM.

1 0 1 2 3 4 5 6 7 8 9

1:100 DRAWING NOT TO SCALE

SYMBOL	DESCRIPTION	DATE	APR

DESIGNED BY: XXX
DATE: 06-27-07
DWN BY: XXX
SUBMITTED BY: SYED ENAYATULLA CHIEF PROJ. BLDG SYSTEMS
CHK BY: XXX
FILE NO.: AF0707MG-E-05

US Army Corps of Engineers Transatlantic Programs Center

ANA REGIONAL BRIGADE
PAKTIKA, AFGHANISTAN
BRIGADE & GARRISON HQ COMPLEX
MAINTENANCE GARAGE (9 BAY)
MEZZANINE LIGHTING PLAN

SHEET REFERENCE NUMBER:
PJ
MG-E-05

XX-X-XX
$(getvar, "dwgprefix")$(getvar, "dwgname")$(edtime, 0, MON DD",", YYYY - HH:MMam/pm)

KEY NOTS:

1. PROVIDE 20A/2P/240V NON-FUSED DISCONNECT SWITCH IN NEMA 3R ENCLOSURE.
2. PROVIDE 20A/2P/240V NON-FUSED DISCONNECT SWITCH IN NEMA 1 ENCLOSURE.
3. PROVIDE 30A/3P/4W WELDING RECEPTACLE +450A.F.F.
4. ELECTRICAL INSTALLATION IN THIS AREA SHALL COMPLY WITH NEC CLASS 1 DIV 2 REQUIREMENTS
5. PROVIDE 50A/3P/380V NON-FUSED DISCONNECT SWITCH +1500mm A.F.F.
6. PROVIDE 30A/3P/380V NON-FUSED DISCONNECT SWITCH +1500mm A.F.F.

NOTES:

1. SEE SHEET CO-E-01 AND CO-E-02. FOR SYMBOLS, ABBREVIATIONS AND GENERAL NOTES.
2. SEE SHEET CO-E-03 TO CO-E-05 FOR STANDARD DETAILS.
3. SEE SHEETS MG-E-01 AND MG-E-02 FOR PANEL SCHEDULE AND RISER DIAGRAMS FOR POWER SYSTEM.
4. PROVIDE FIRE ALARM PULL BOXES, CONDUITS AND WIRING FOR FUTURE SELF SMOKE DETECTION.
5. THE EXHAUST FANS FROM EF-MG-01 TO EF-MG-10 AND RELATED MOTORIZED DAMPERS SHALL BE CONTROLLED TOGETHER VIA MANUAL MOTOR STARTER

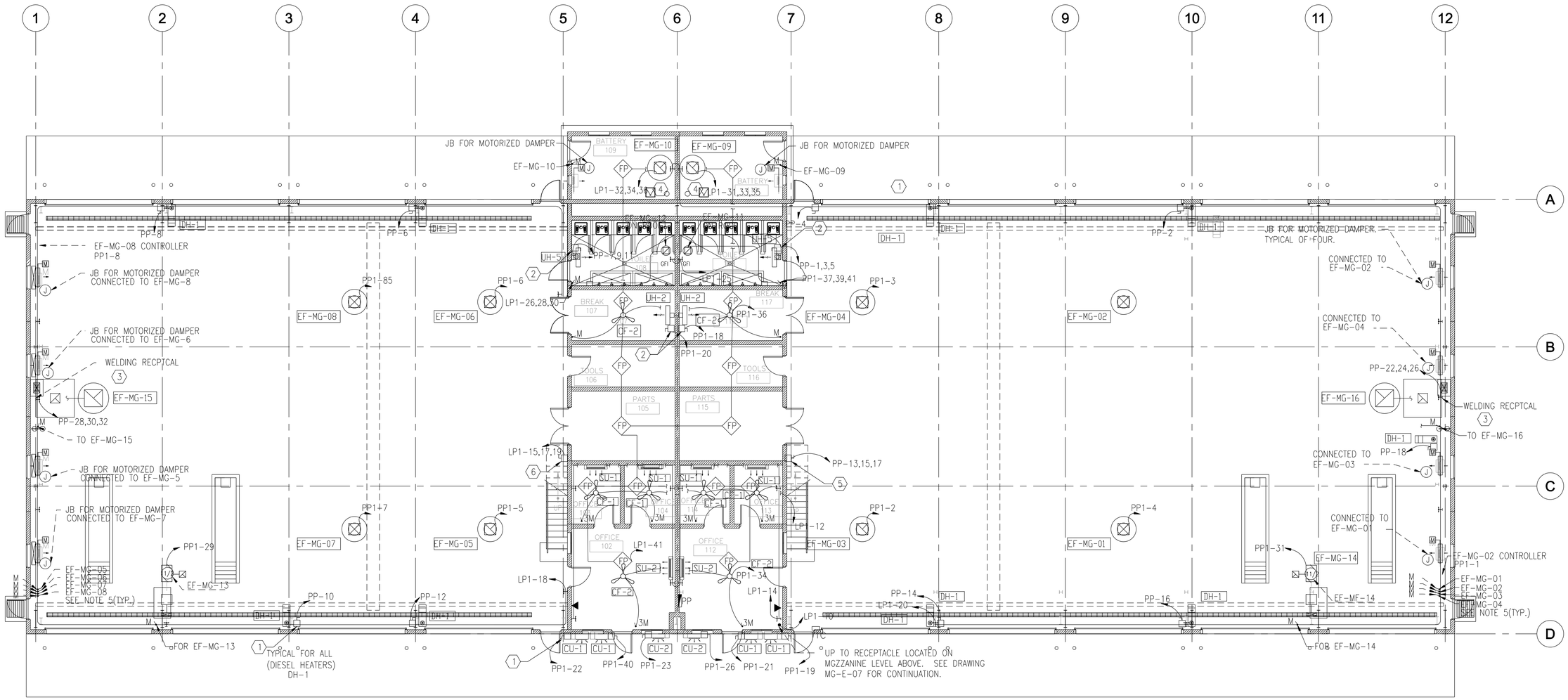

1 POWER AND COMMUNICATION PLAN

MG-E-06

SCALE: 1:100

1:100 DRAWING NOT TO SCALE

SYMBOL	DESCRIPTION	DATE	APR

DESIGNED BY: XXX
DATE: 06-27-07
DWN BY: XXX
SUBMITTED BY: SYED ENAYATULLA CHIEF POWER BLDG SYSTEMS
CHK BY: XXX
FILE NO.: AF0707MG-E-06

US Army Corps of Engineers Transatlantic Programs Center

ANA REGIONAL BRIGADE
PAKTIKA, AFGHANISTAN
BRIGADE & GARRISON HQ COMPLEX
MAINTENANCE GARAGE (9 BAY)
POWER AND COMMUNICATION PLAN

SHEET REFERENCE NUMBER:
PJ
MG-E-06

NOTES:

1. SEE SHEET CO-E-01 FOR SYMBOLS, ABBREVIATIONS,AND GENERAL NOTES
2. SEE SHEETS CO-E-03 TO CO-E-05 FOR STANDARD DETAILS
3. SEE SHEETS MG-E-01 AND MG-E-02 FOR PANEL SCHEDULE AND RISER DIAGRAMS FOR POWER SYSTEM.
4. PROVIDE FIRE ALARM PULL BOXES, CONDUITS AND WIRING FOR FUTURE SELF SMOKE DETECTORS.
5. THE EXHAUST FAN SHALL BE EQUIPED WITH DISCONNECT SWITCH FOR MAINTENANCE.

KEY NOTS:

(1) PROVIDE 20A/2P/220V NON-FUSED DISCONNECT SWITCH IN NEMA 3R ENCLOSURE.

(2) PROVIDE 25A/3P/380V NON-FUSED DISCONNECT SWITCH IN NEMA 3R ENCLOSURE.

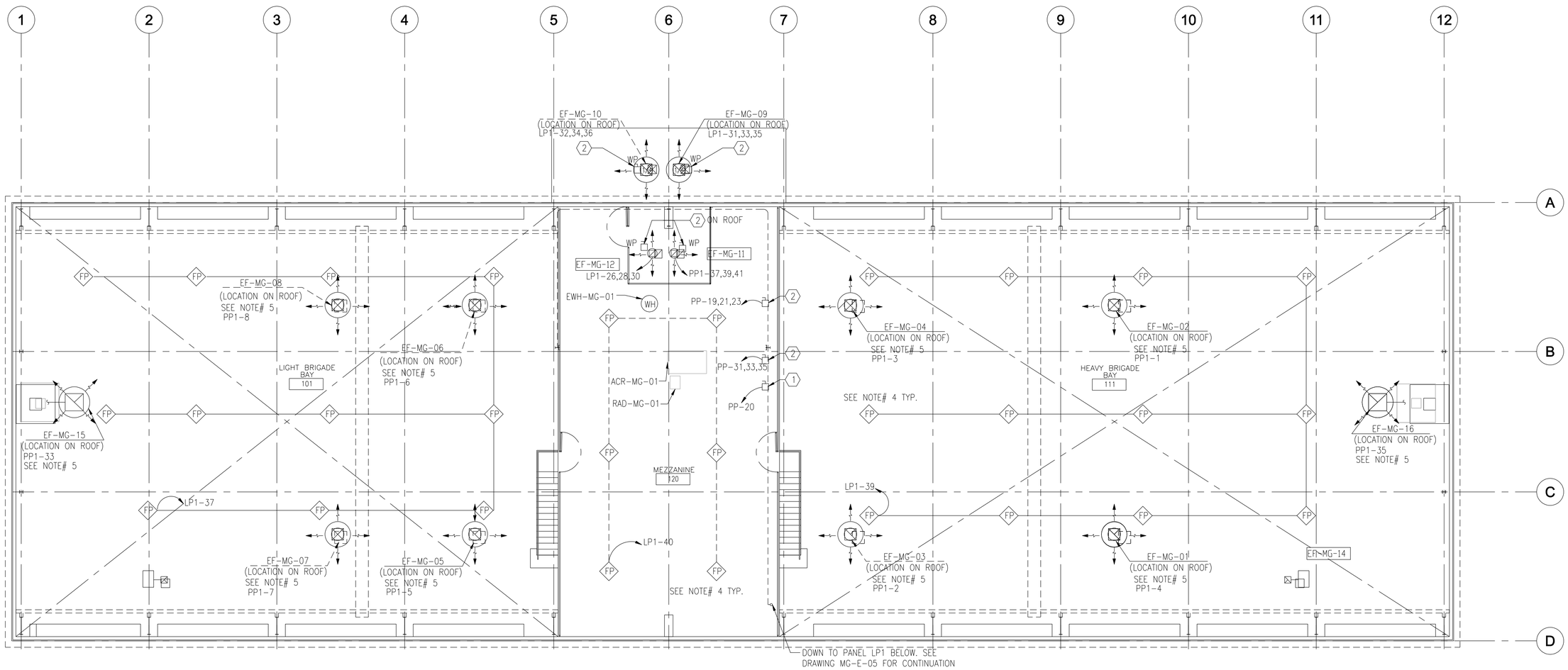

1 MEZZANINE POWER & COMM PLAN

MG-E-07 SCALE: 1:100

1:100 DRAWING NOT TO SCALE

SYMBOL	DESCRIPTION	DATE	APR

DESIGNED BY: XXX
DWN BY: XXX
CHK BY: XXX
DATE: 06-27-07
SUBMITTED BY: SYED ENAYATULLA CHIEF, PDT BLDG SYSTEMS
FILE NO.: AF0707MG-E-07

US Army Corps of Engineers Transatlantic Programs Center

ANA REGIONAL BRIGADE
PAKTIKA, AFGHANISTAN
BRIGADE & GARRISON HQ COMPLEX
MAINTENANCE GARAGE (9 BAY)
MEZZANINE POWER & COMM PLAN

SHEET REFERENCE NUMBER:
PJ
MG-E-07

$(getvar, "dwgprefix")$(getvar, "dwgname")$(edtime, 0, MON DD", YYYY - HH:MMam/pm)
XX-X-XX

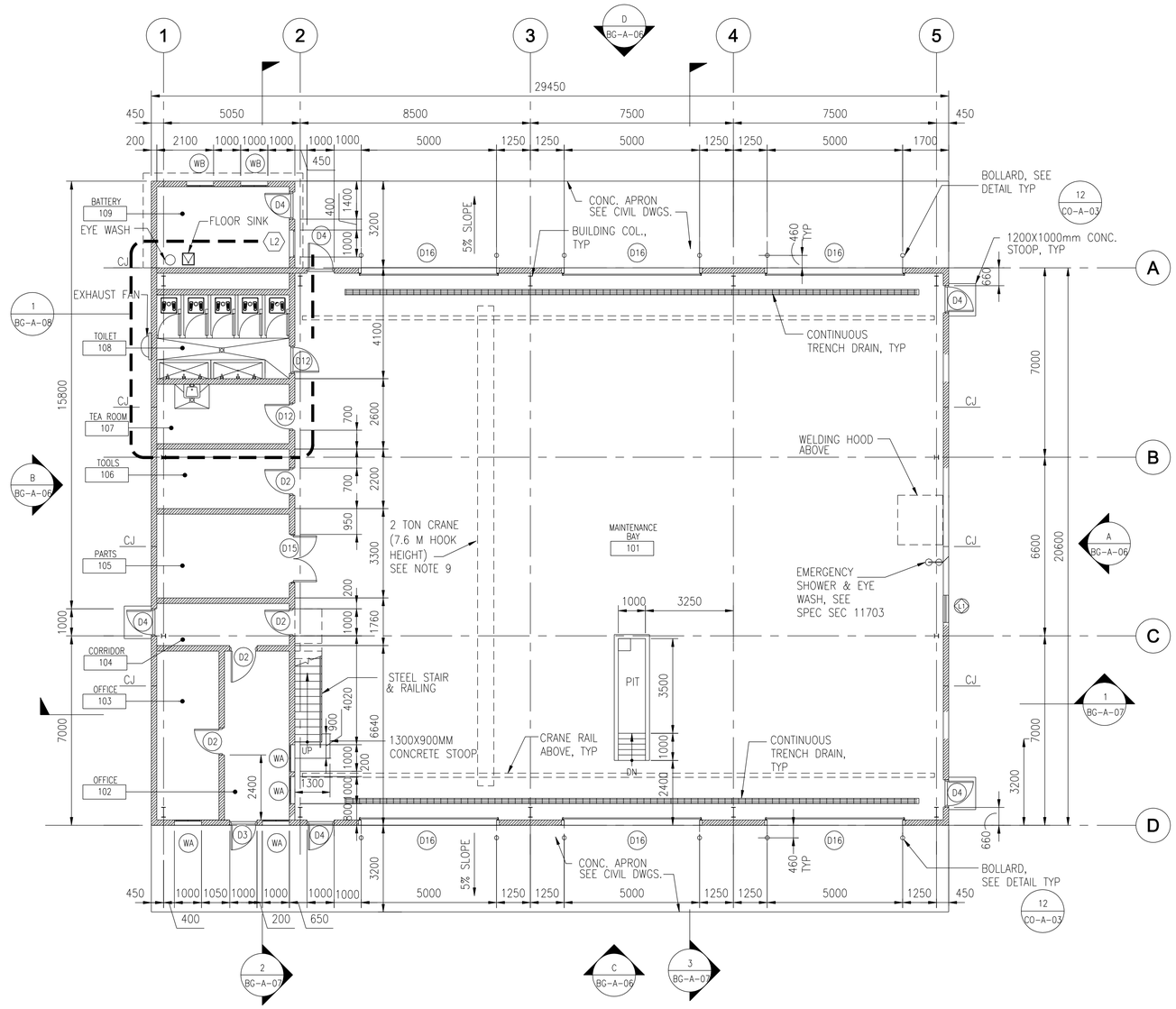

1 FLOOR PLAN

BG-A-01 SCALE: 1:100

FINISHING SCHEDULE LEGEND

FLOOR

F1	SEALED CONCRETE
F2	300MMX300MM TERRAZZO TILE
F3	CERAMIC TILE

WALL

W1	WHITE PAINTED PLASTER
W3	150MMX150MM GLAZED CERAMIC TILES UP TO 2000MM A.F.F.L.

CEILING

C1	GYPSUM BOARD – PAINTED
C2	EXPOSED STRUCTURE – PAINTED
C3	MOISTURE RESISTANT GYPSUM BOARD – PAINTED

WALL SYMBOLS:

CMU WALL +3200MM HIGH WITH PLASTER FINISH.

CMU LOW HEIGHT WALL +/– 2000 MM WITH CERAMIC TILE FINISH

CJ CMU CONTROL JOINT

FINISHING SCHEDULE

Room No.	Usage	Floor	Wall	Ceiling
101	MAINTENANCE BAY	F1	W1	C2
102	OFFICE	F2	W1	C1
103	OFFICE	F2	W1	C1
104	CORRIDOR	F2	W1	C1
105	PARTS	F1	W1	C1
106	TOOLS	F1	W1	C1
107	TEA ROOM	F2	W1	C1
108	TOILET	F3	W1 , W3	C3
109	TOOLS	F1	W1	C2
201	TIRES	F1	–	C2

NOTES:

1– ALL WALLS ARE CMU UNLESS NOTED OTHERWISE.

2– ALL WALL TERMINATE AT CEILING UNLESS NOTED OTHERWISE.

3– ALL DIMENSIONS ARE TO FACE OF CMU UNLESS NOTED OTHERWISE.

4– ALL VERTICAL DIMENSIONS & LEVELS ARE FROM GROUND FLOOR FINISHED SLAB. THIS ELEVATION IS +0000.

5– SEE DRAWING CO–A–05 & CO–A–06 FOR OPENING SCHEDULES & TYPES.

6– SEE DRAWING CO–A–02, CO–A–03 & CO–A–04 FOR STANDARD DETAILS.

7– SEE CIVIL DRAWINGS FOR BUILDING COORDINATES AND FINISH FLOOR ELEVATION.

8– SEE STRUCTURAL DRAWINGS FOR LOCATION OF BUILDING CONTROL AND SEISMIC JOINTS.

9– FOR CSS GARAGE USE 10 TON CRANE.

10–TOTAL AREA OF BUILDING IS 623.63 SM.

NOTE:
ORIENT BUILDING ON SITE SUCH THAT TOILETS ARE ON A NORTH/SOUTH ACCESS.

1:100

SYMBOL	DESCRIPTION	DATE	APR

DESIGNED BY: YSK
DWN BY: JSG
CHK BY: PLD
DATE: 06-27-07
SUBMITTED BY: CHIEF, PDD PANELLO PACELLES DEV
FILE NO.: AF0707BG-A-01

US Army Corps of Engineers Transatlantic Programs Center

ANA REGIONAL BRIGADE
PAKTIKA, AFGHANISTAN

MAINTENANCE GARAGE (3 BAY)

FLOOR PLAN

SHEET REFERENCE NUMBER:
SK
BG–A–01

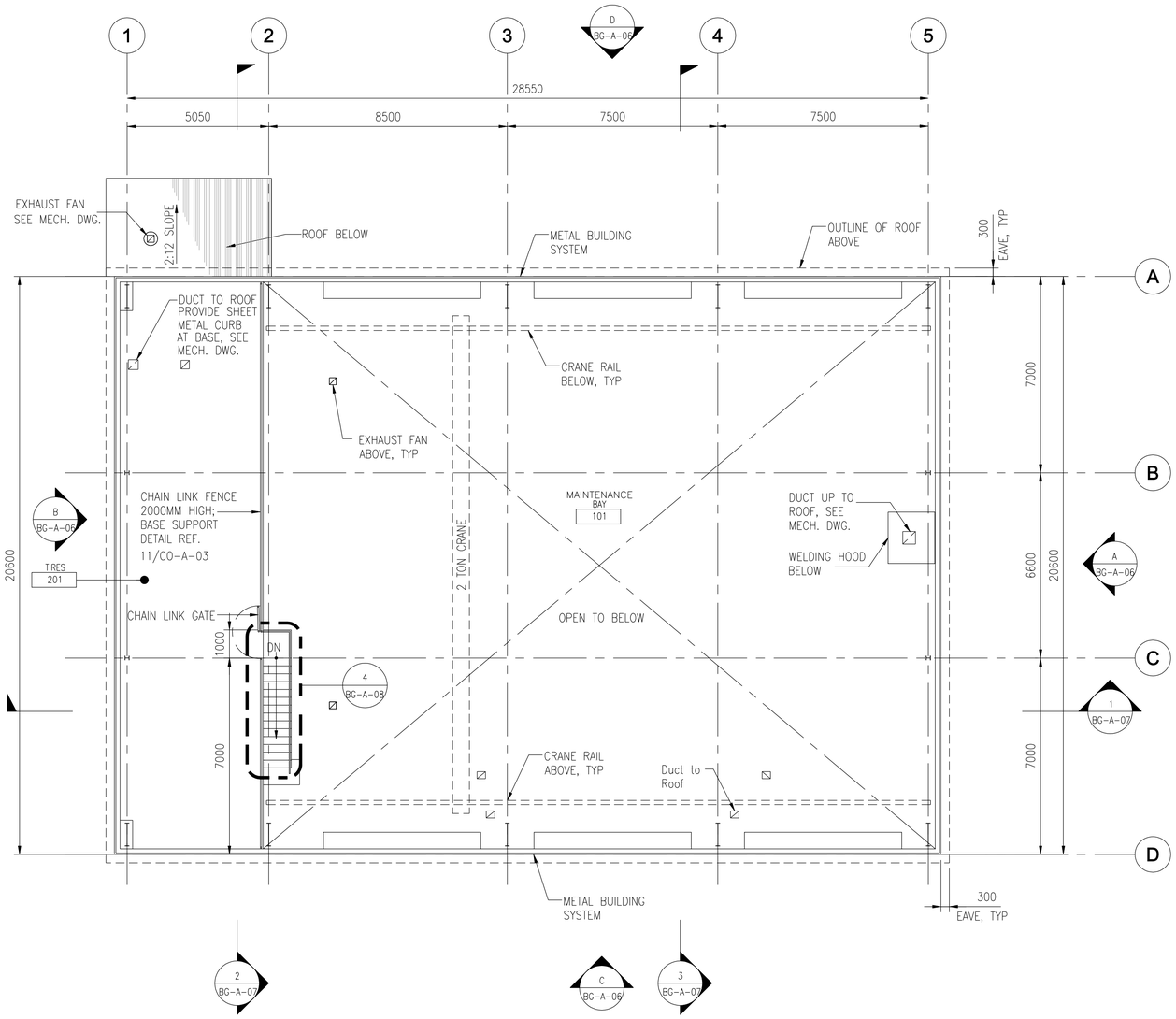

1 MEZZANINE FLOOR PLAN

BG-A-02

SCALE: 1:100

1 0 1 2 3 4 5 6 7 8 9
1:100

SYMBOL	DESCRIPTION	DATE	APR

DESIGNED BY: YSK
DWN BY: JSG
CHK BY: PLD
DATE: 06-27-07
SUBMITTED BY: PHILIP L. PANELLO CHIEF, PROJ. DEVELOPMENT
FILE NO.: AF0707 BG-A-02

US Army Corps of Engineers Transatlantic Programs Center

ANA REGIONAL BRIGADE
PAKTIKA, AFGHANISTAN

MAINTENANCE GARAGE (3 BAY)

MEZZANINE FLOOR PLAN

SHEET REFERENCE NUMBER:
SK
BG-A-02

$(getvar, "dwgprefix")$(getvar, "dwgname")$(edtime, O, MON DD"," YYYY - HHMMam/pm)

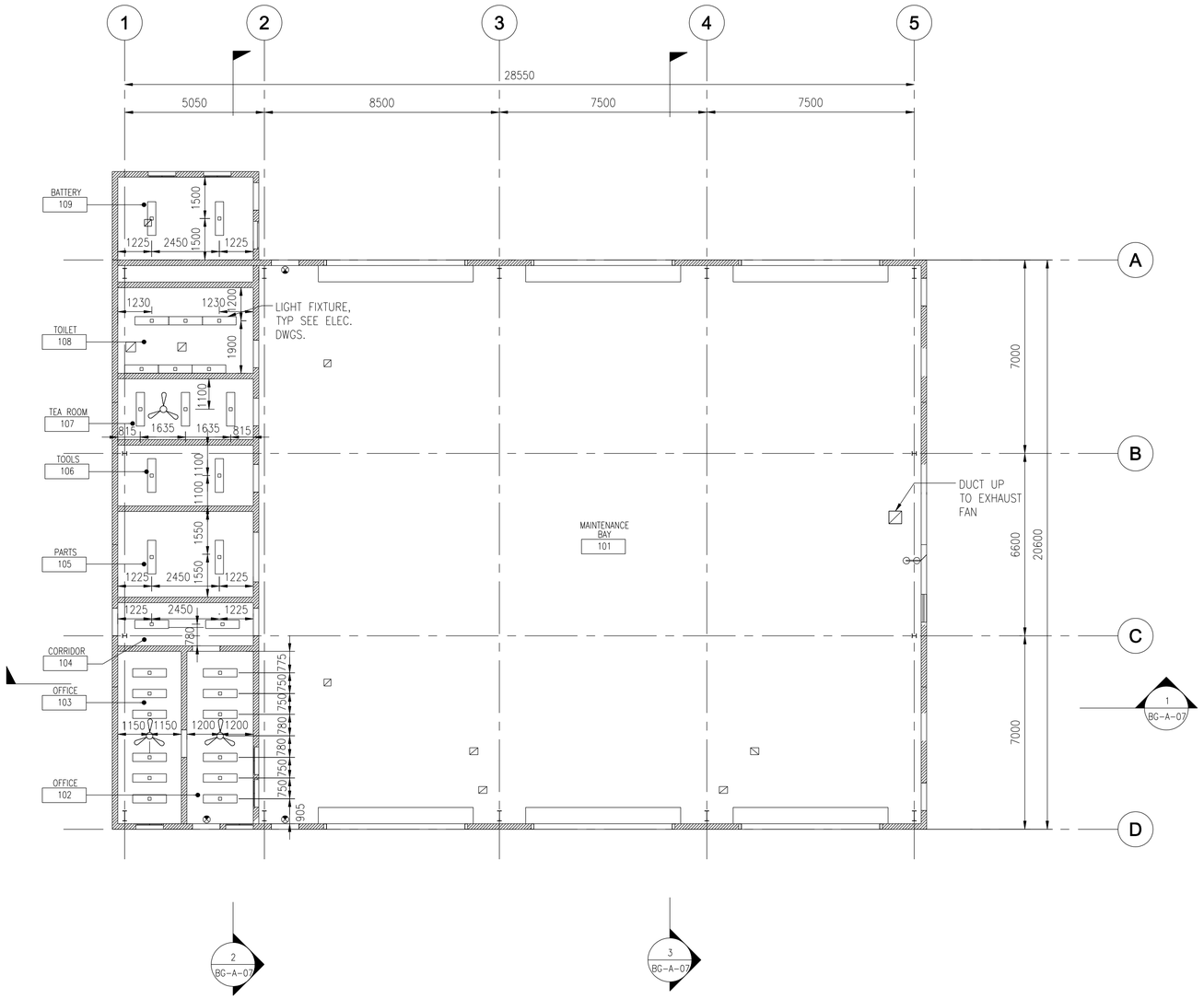

1 BELOW MEZZANINE REFLECTED CEILING PLAN

BG-A-03

SCALE: 1:100

NOTES:

1- SEE SHEET BG-A-01 FOR FINISH SCHEDULE.

2- SEE SHEET CO-E-01 FOR LIGHTING LEGEND.

SYMBOL	DESCRIPTION	DATE	APR

DESIGNED BY: YSK
DWN BY: JSG
CHK BY: PLD
DATE: 06-27-07
SUBMITTED BY: CHIEF, PANELLO PROJ FACILITIES DEV
FILE NO.: AF0707BG-A-03

US Army Corps of Engineers Transatlantic Programs Center

ANA REGIONAL BRIGADE
PAKTIKA, AFGHANISTAN

MAINTENANCE GARAGE (3 BAY)
BELOW MEZZANINE REFLECTED CEILING PLAN

SHEET REFERENCE NUMBER:
SK
BG-A-03

1 0 1 2 3 4 5 6 7 8 9
1:100

$(getvar, "dwgprefix")$(getvar, "dwgname")$(edtime, 0, MON DD",", YYYY - HHMMam/pm)

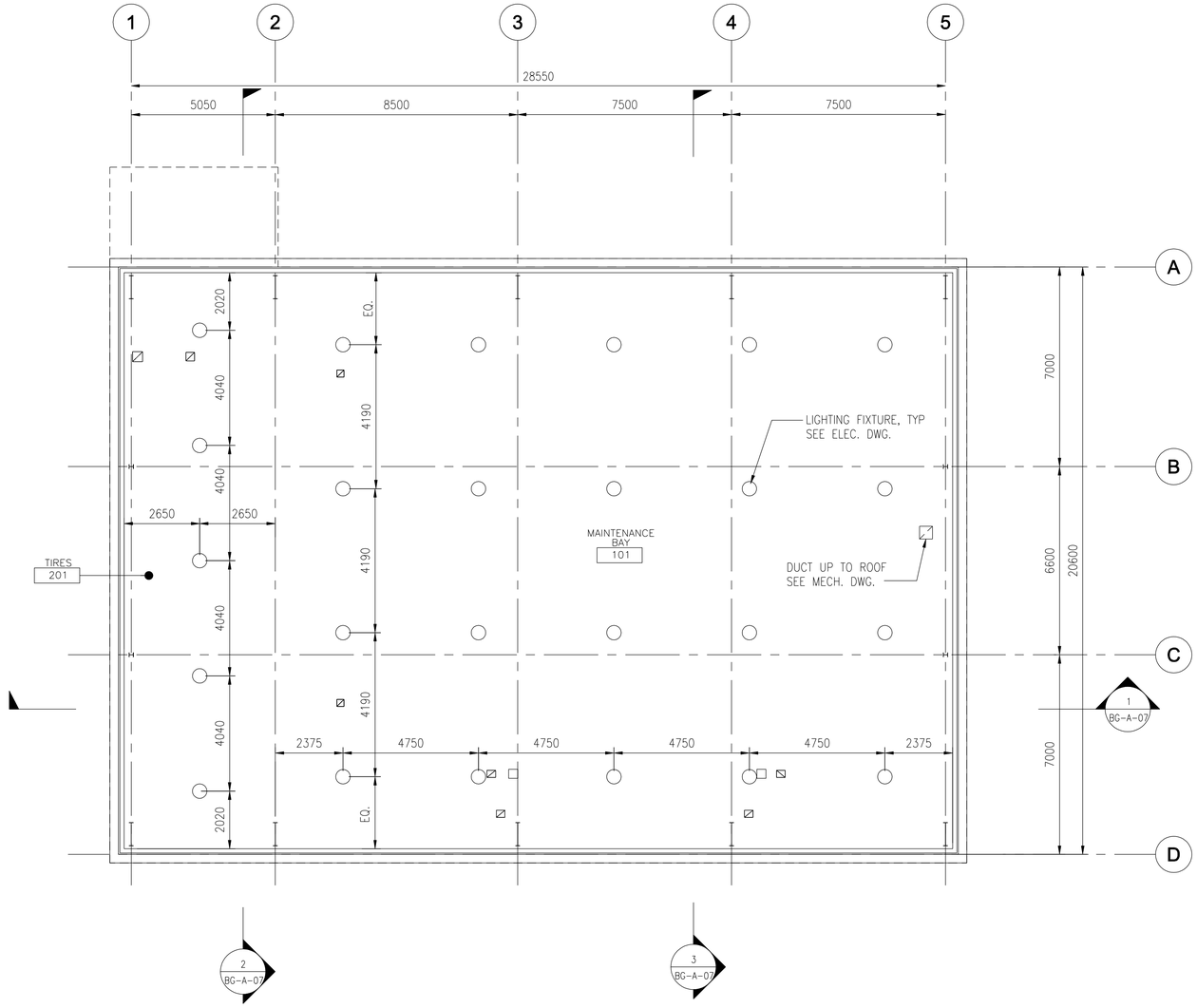

1 REFLECTED CEILING PLAN

BG-A-04

SCALE: 1:100

NOTES:

1- SEE SHEET BG-A-01 FOR FINISH SCHEDULE.

2- SEE SHEET CO-E-01 FOR LIGHTING LEGEND.

SYMBOL	DESCRIPTION	DATE	APR

DESIGNED BY: YSK
DWN BY: JSG
CHK BY: PLD
DATE: 06-27-07
SUBMITTED BY: PHILIP J. PANELLO
CHIEF, PROJECT DEV. FACILITIES
FILE NO.: AF0707 BG-A-04

US Army Corps of Engineers
Transatlantic Programs Center

ANA REGIONAL BRIGADE
PAKTIKA, AFGHANISTAN

MAINTENANCE GARAGE (3 BAY)
REFLECTED CEILING PLAN

SHEET REFERENCE NUMBER:
SK
BG-A-04

1 0 1 2 3 4 5 6 7 8 9
1:100

$(getvar, "dwgprefix")$(getvar, "dwgname")$(edtime, 0, MON DD"", YYYY - H:MMam/pm)

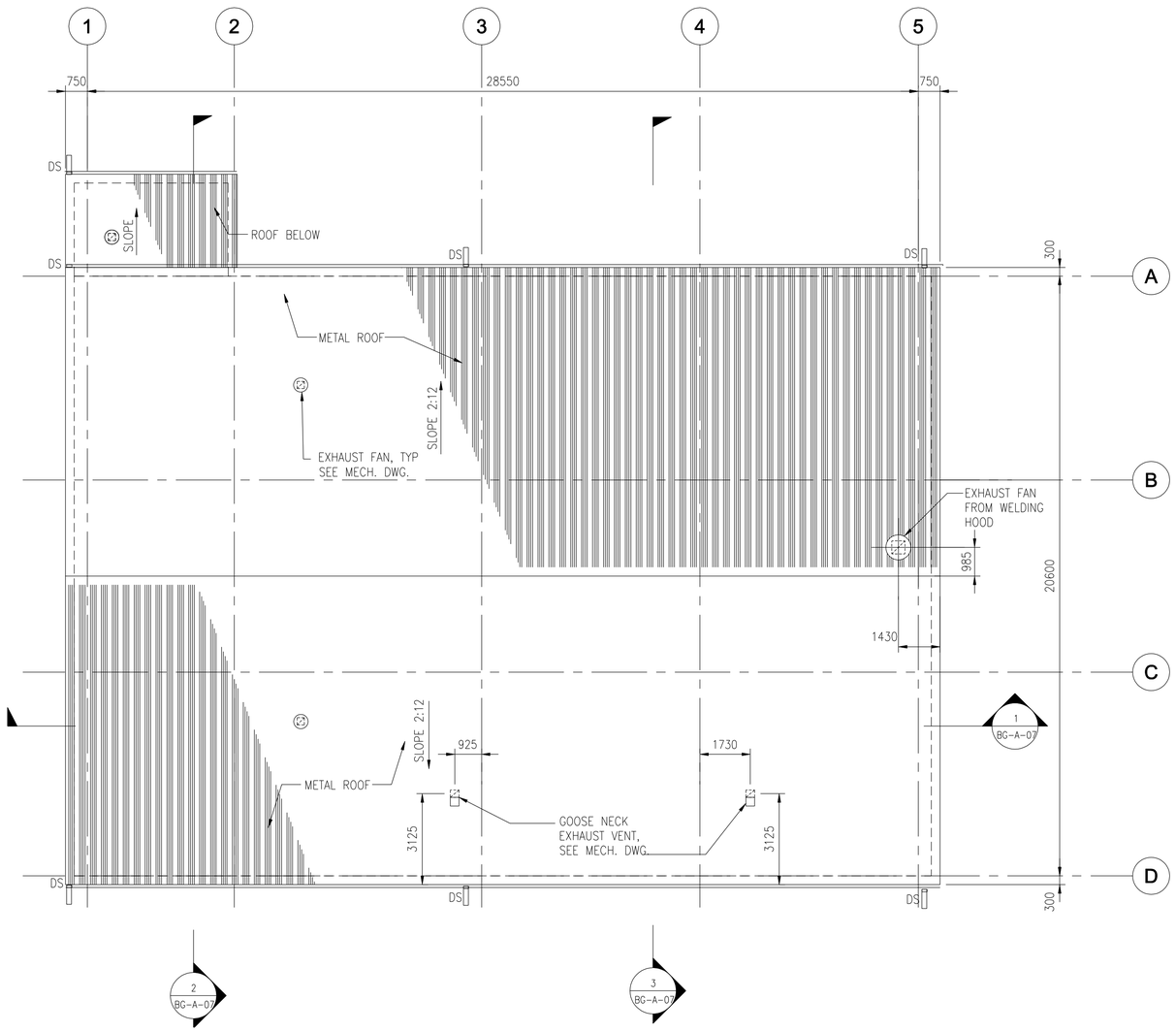

1 ROOF PLAN

BG-A-05

SCALE: 1:100

1 0 1 2 3 4 5 6 7 8 9
1:100

SYMBOL	DESCRIPTION	DATE	APR

DESIGNED BY: YSK
DATE: 06-27-07
DWN BY: JSG
SUBMITTED BY: PHILIP J. PINELLO CHIEF, PDT PACIFICS DEV
CHK BY: PLD
FILE NO.: AF0707 BG-A-05

US Army Corps of Engineers Transatlantic Programs Center

ANA REGIONAL BRIGADE
PAKTIKA, AFGHANISTAN

MAINTENANCE GARAGE (3 BAY)

ROOF PLAN

SHEET REFERENCE NUMBER:
SK
BG-A-05

$(getvar, "dwgprefix")$(getvar, "dwgname")$(edtime, 0, MON DD",", YYYY - HHMMam/pm)

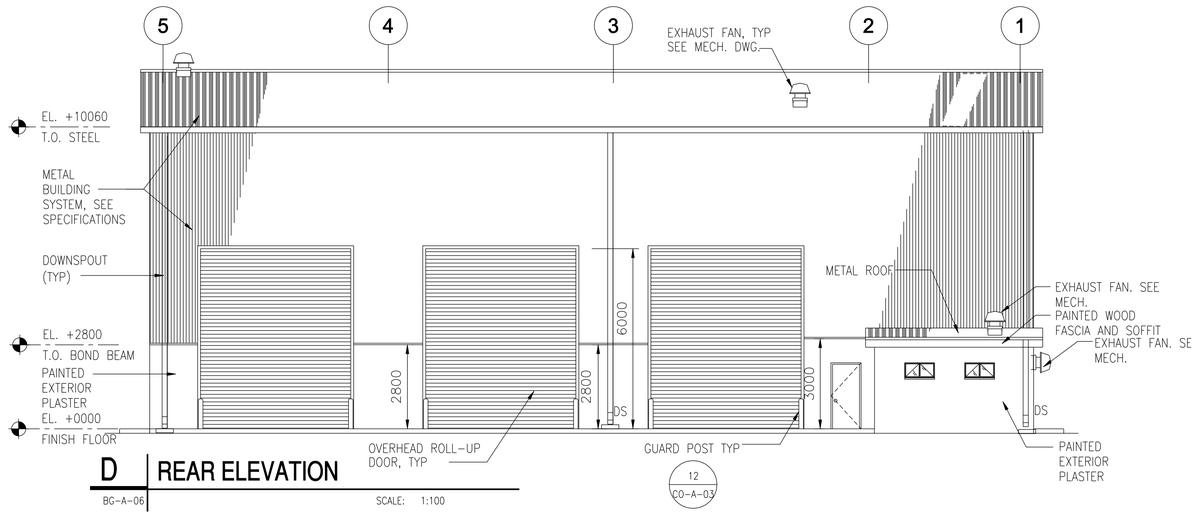

D REAR ELEVATION

BG-A-06 SCALE: 1:100

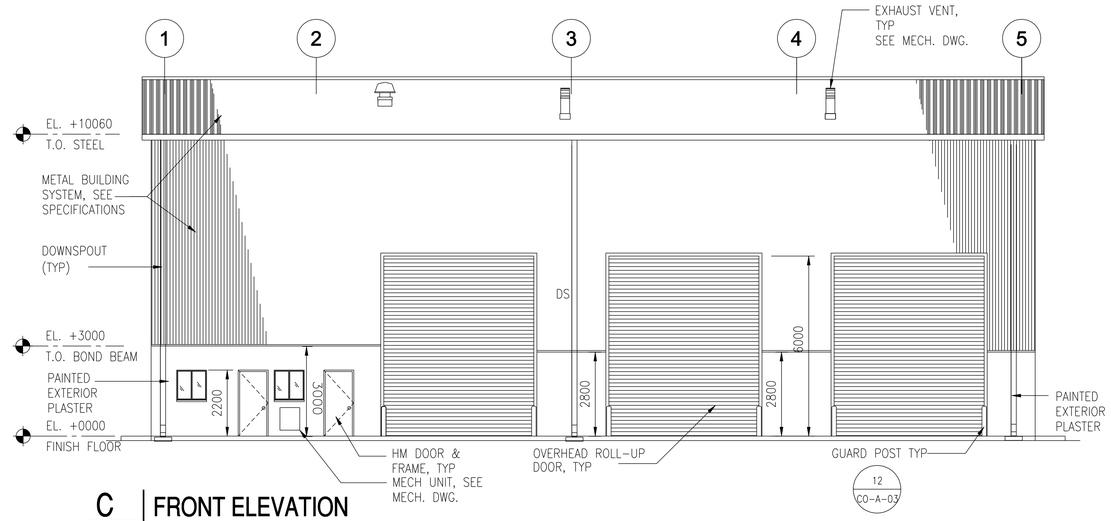

C FRONT ELEVATION

BG-A-06 SCALE: 1:100

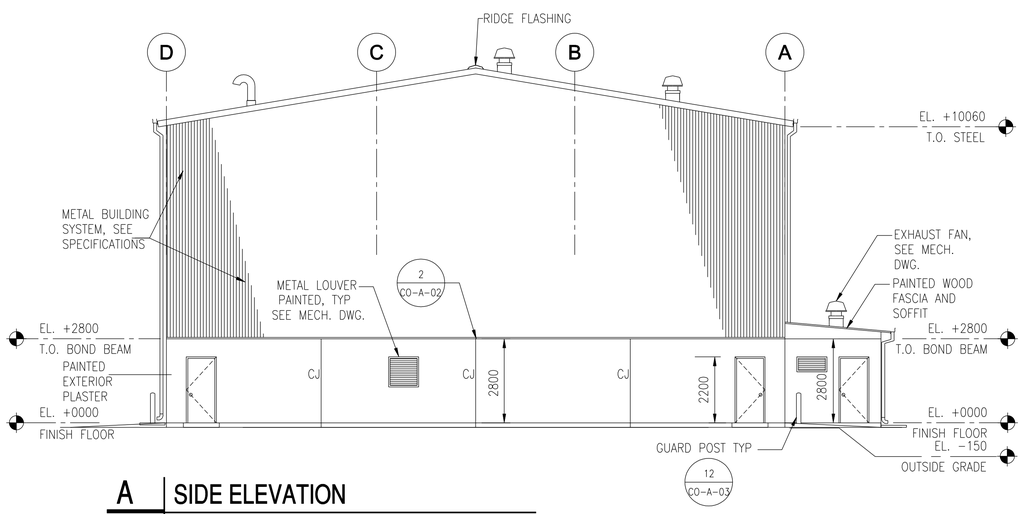

A SIDE ELEVATION

BG-A-06 SCALE: 1:100

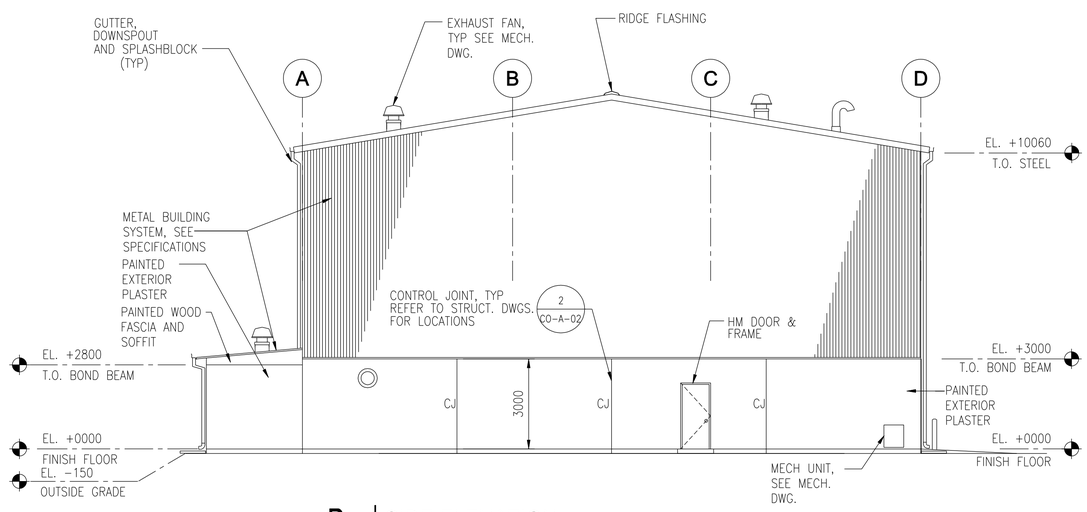

B SIDE ELEVATION

BG-A-06 SCALE: 1:100

1 0 1 2 3 4 5 6 7 8 9
1:100

SYMBOL	DESCRIPTION	DATE	APR

DESIGNED BY: YSK
DWN BY: JSG
CHK BY: PLD
DATE: 06-27-07
SUBMITTED BY: CHIEF, PANELLO DIV PROJ FACILITIES
FILE NO.: AF0707 BG-A-06

US Army Corps of Engineers Transatlantic Programs Center

ANA REGIONAL BRIGADE
PAKTIKA, AFGHANISTAN

MAINTENANCE GARAGE (3 BAY)

BUILDING ELEVATIONS

SHEET REFERENCE NUMBER:
SK
BG-A-06

$(getvar, "dwgprefix")$(getvar, "dwgname")$(edtime, O, MON DD", YYYY - HHMMam/pm)

NOTE:

- PROVIDE R-19 BLANKET INSULATION AT UNDERSIDE OF MET. ROOFING AND R-13 BLANKET INSULATION AT BACKSIDE OF METAL WALL PANELS.

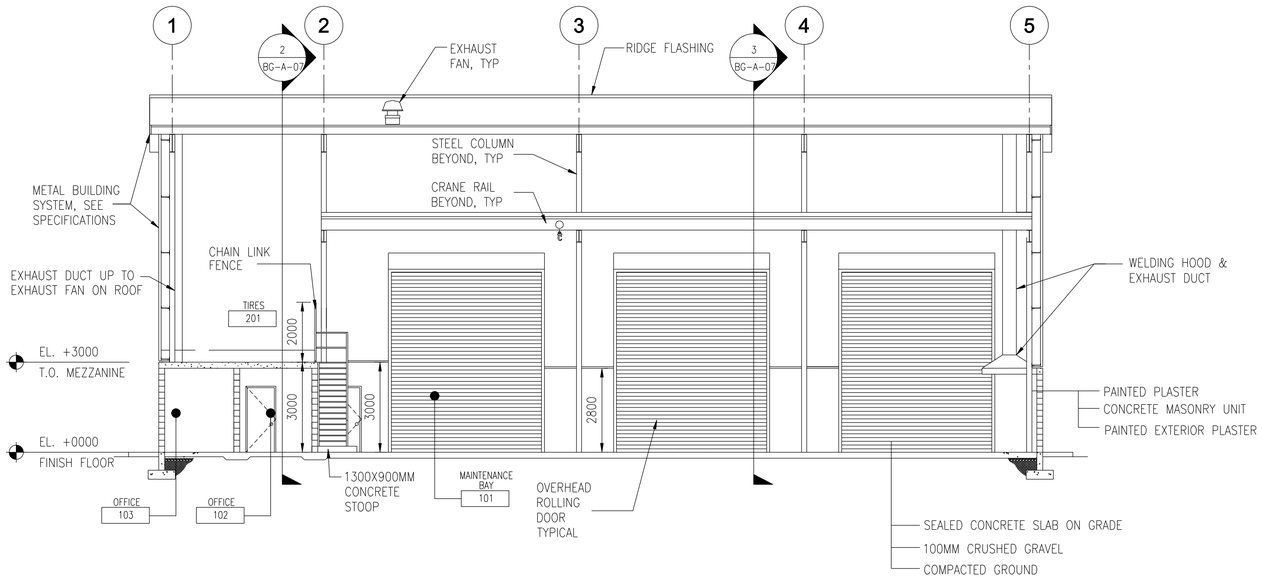

1 LONGITUDINAL SECTION

BG-A-07 SCALE: 1:100

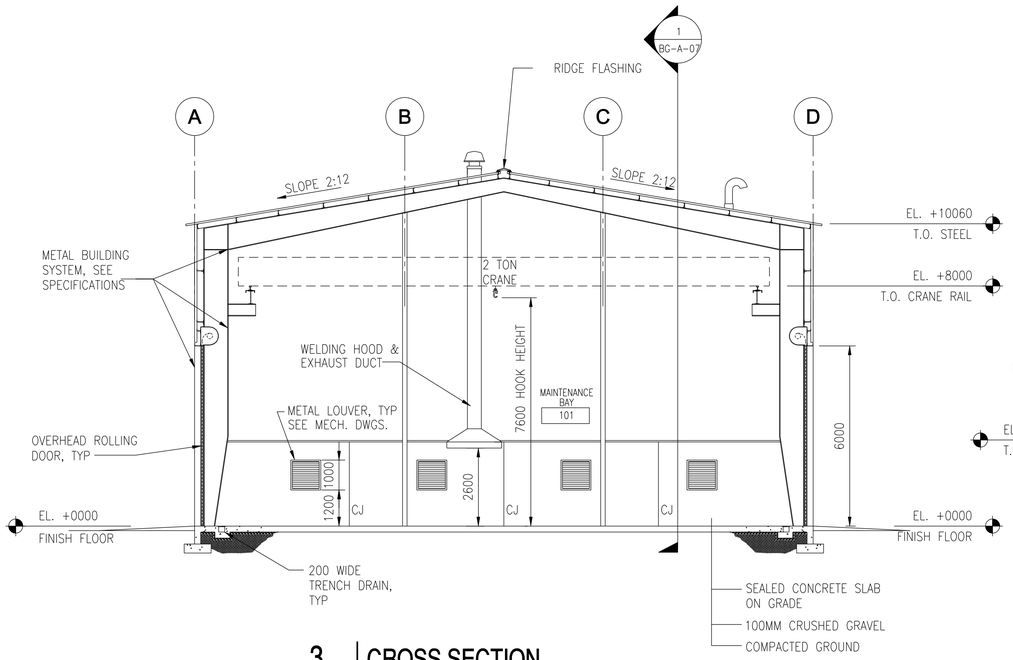

3 CROSS SECTION

BG-A-07 SCALE: 1:100

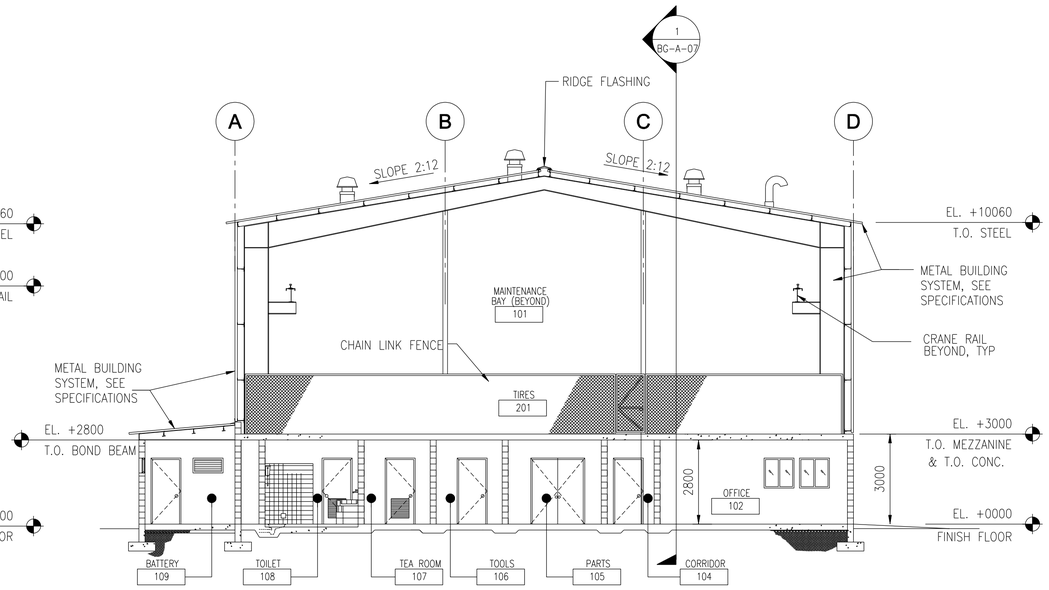

2 CROSS SECTION

BG-A-07 SCALE: 1:100

1 0 1 2 3 4 5 6 7 8 9
1:100

SYMBOL	DESCRIPTION	DATE	APR

DESIGNED BY: YSK
DATE: 06-27-07
DWN BY: JSG
SUBMITTED BY: CHIEF, PROJ MGT
CHK BY: PLD
FILE NO.: AF0707 BG-A-07

US Army Corps of Engineers
Transatlantic Programs Center

ANA REGIONAL BRIGADE
PAKTIKA, AFGHANISTAN

MAINTENANCE GARAGE (3 BAY)

BUILDING SECTIONS

SHEET REFERENCE NUMBER:
SK
BG-A-07

$(getvar, "dwgprefix")$(getvar, "dwgname")$(edtime, O, MON DD",", YYYY - H:MMam/pm)

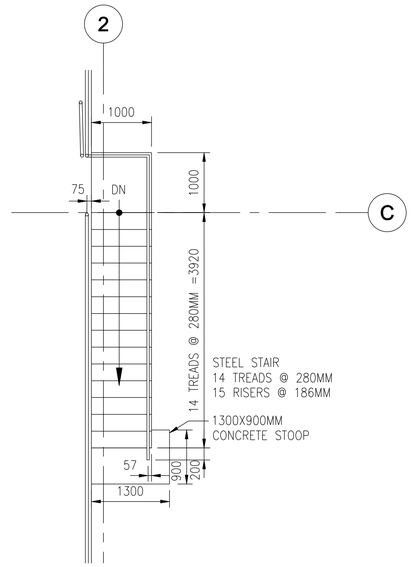

4 MEZZANINE STAIR PLAN

BG-A-08 SCALE: 1:50

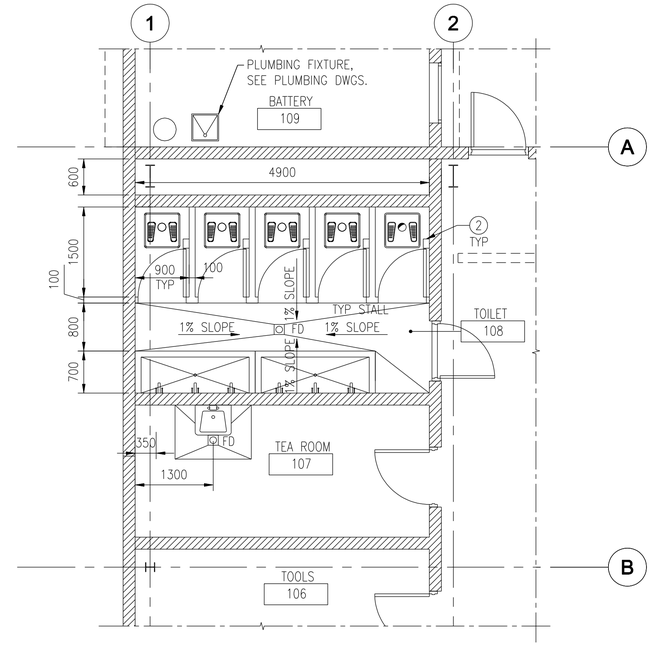

1 TOILET ROOM FLOOR PLAN

BG-A-08 SCALE: 1:50

TOILET ACCESSORY SCHEDULE

No.	Description
1	MIRROR 600X900X6MM PL.GLASS
2	SS TOILET PAPER HOLDER

NOTE:

- SEE DET. 14/C0-A-04 FOR MULTI-FAUCET SINK DETAIL.

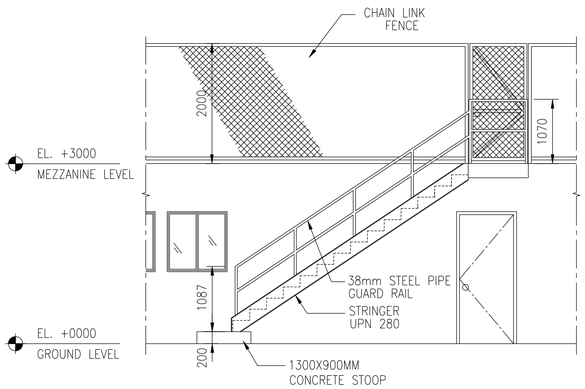

5 MEZZANINE STAIR ELEVATION

BG-A-08 SCALE: 1:50

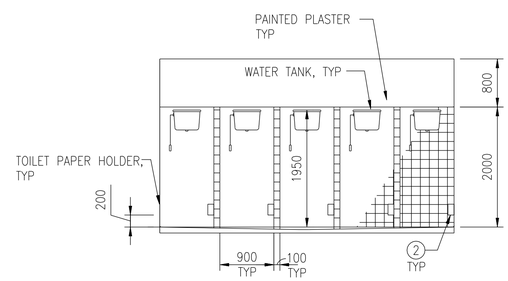

2 TOILET ROOM ELEVATION

BG-A-08 SCALE: 1:50

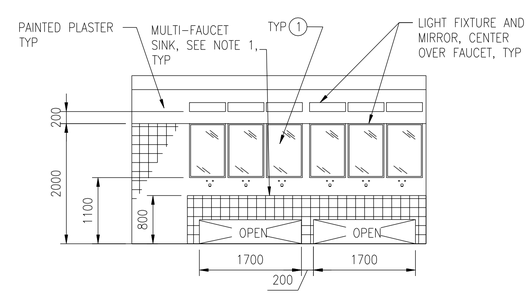

3 TOILET ROOM ELEVATION

BG-A-08 SCALE: 1:50

1 0 1 2 3 4
1:50

SYMBOL	DESCRIPTION	DATE	APR

DESIGNED BY: YSK
DWN BY: JSG
CHK BY: PLD
DATE: 06-27-07
SUBMITTED BY: PHILIP J. PANELLO CHIEF, PROJECT DEVELOPMENT
FILE NO.: AF0707BG-A-08

US Army Corps of Engineers Transatlantic Programs Center

ANA REGIONAL BRIGADE
PAKTIKA, AFGHANISTAN

MAINTENANCE GARAGE (3 BAY)

STAIR AND TOILET PLANS AND ELEVATIONS

SHEET REFERENCE NUMBER:
SK
BG-A-08

$(getvar, "dwgprefix")$(getvar, "dwgname")$(edtime, O, MON DD"", YYYY - H:MMam/pm)

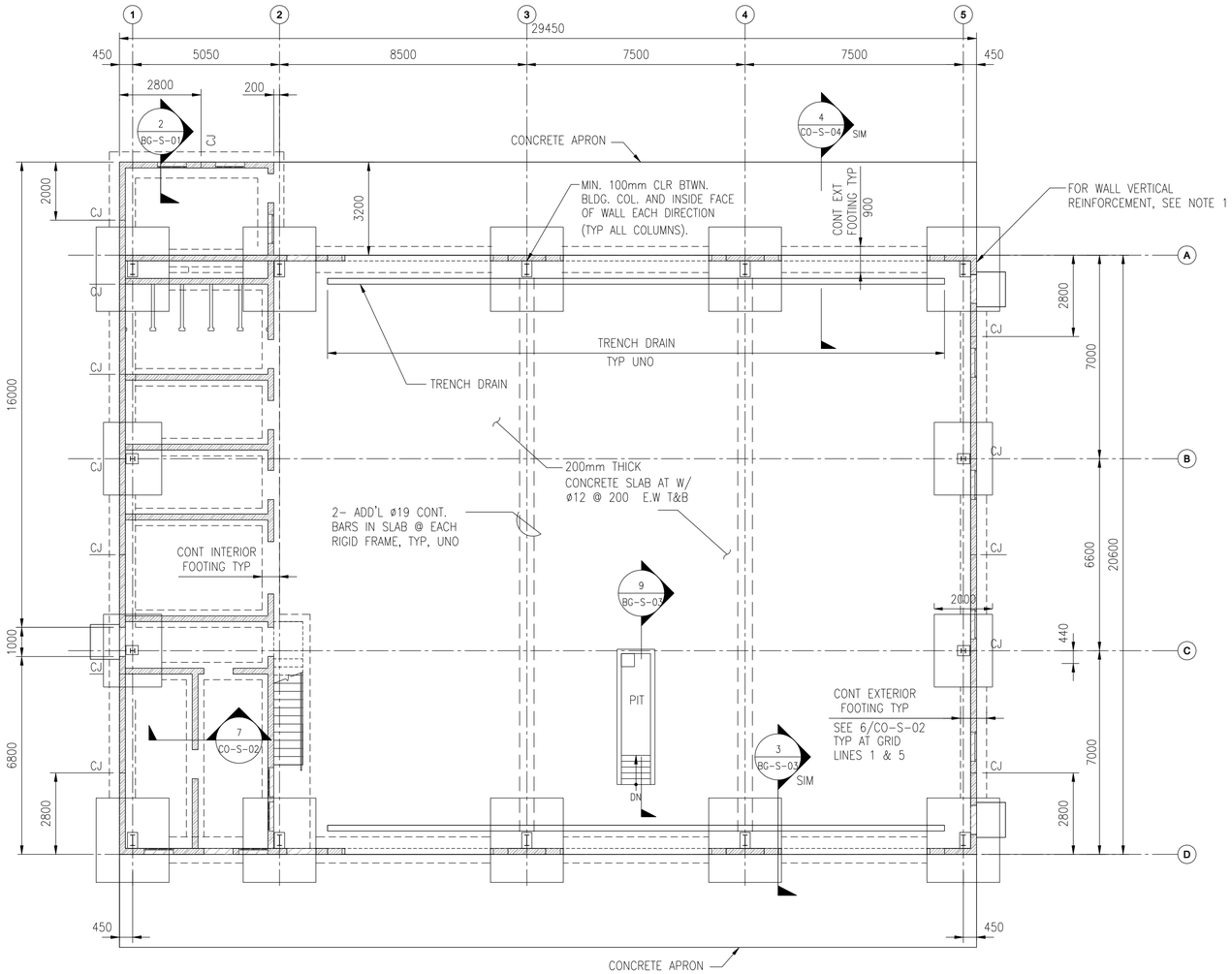

1 FOUNDATION PLAN

BG-S-01 SCALE: 1:100

NOTES:

1. OUT-TO-OUT BUILDING DIMENSIONS SHOWN ARE MINIMUMS. THE CONTRACTOR SHALL COORDINATE COLUMN (METAL BLDG), BASE PLATE (GROUT, IF ANY), ANCHOR BOLTS AND CONCRETE MAT SLAB DIMENSIONS TO SUIT "METAL BUILDING SYSTEM" SELECTED.

2. CONTRACTOR SHALL DESIGN THE FOUNDATIONS TO SUPPORT THE METAL BUILDING SYSTEM AND THE EXTERIOR 3.0 METER HIGH SKIRT WALL

3. REFER TO ARCHITECTURAL DRAWINGS FOR BUILDING SIZE AND OTHER REQUIREMENTS. PRE-ENGINEERED BUILDING SHALL CONFORM TO THE REQUIREMENTS OF THE METAL BUILDING MANUFACTURER ASSOCIATION - MBMA.

4. DESIGN LOADS (SERVICE)

LOADS:

ROOF = 98 KG/SQ. M (20 PSF)
FLOOR = 1225 KG/SQ. M (250 PSF)

FORKLIFT: AXLE LOAD CAPACITY OF 2722 Kg (6000 LBS)

WIND VELOCITY 125 KPH, EXPOSURE C AND IMPORTANCE FACTOR I=1.0.

EARTHQUAKE:

SEISMICITY: Ss=1.65g AND S_1=0.75g USE GROUP I, SITE CLASS D, IMPORTANCE FACTOR I=1.0.

5. MATERIALS:

CONCRETE: 28 MPa CYLINDER STRENGTH AT 28 DAYS
REINFORCING: ASTM A615 GRADE 60
WELDED WIRE FABRIC: ASTM A185

6. FOR CJ AND CJT DETAILS SEE GENERAL DETAILS.

7. ALLOWABLE SOIL BEARING CAPACITY 4900 KSM (1000 PSF).

REINFORCING

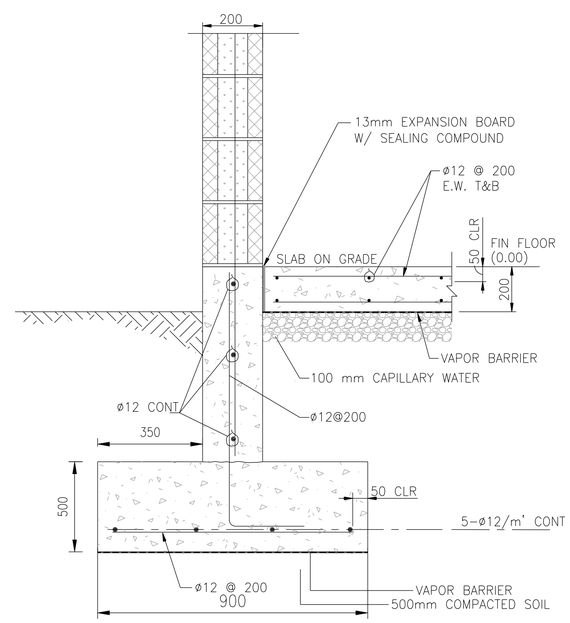

2 SECTION THROUGH EXTERIOR PERIMETER CMU WALL

BG-S-01 SCALE: N.T.S.

1 0 1 2 3 4 5 6 7 8 9
1:100

SYMBOL	DESCRIPTION	DATE	APR

DESIGNED BY: TCP
DWN BY: TCP
CHK BY: KGO
DATE: 06-27-07
SUBMITTED BY: PHILIP J. PANELLO
CHIEF, PROJECTS DEV
FILE NO.: AF0707 SK-BG-S-01

US Army Corps of Engineers Transatlantic Programs Center

AINA REGIONAL BRIGADE
PAKTIKA, AFGHANISTAN

MAINTENANCE GARAGE(3 BAY)
FOUNDATION PLAN & SECTION

SHEET REFERENCE NUMBER:
SK
BG-S-01

$(getvar, "dwgprefix")$(getvar, "dwgname")$(edtime, O, MON DD"," YYYY - H:MMam/pm)

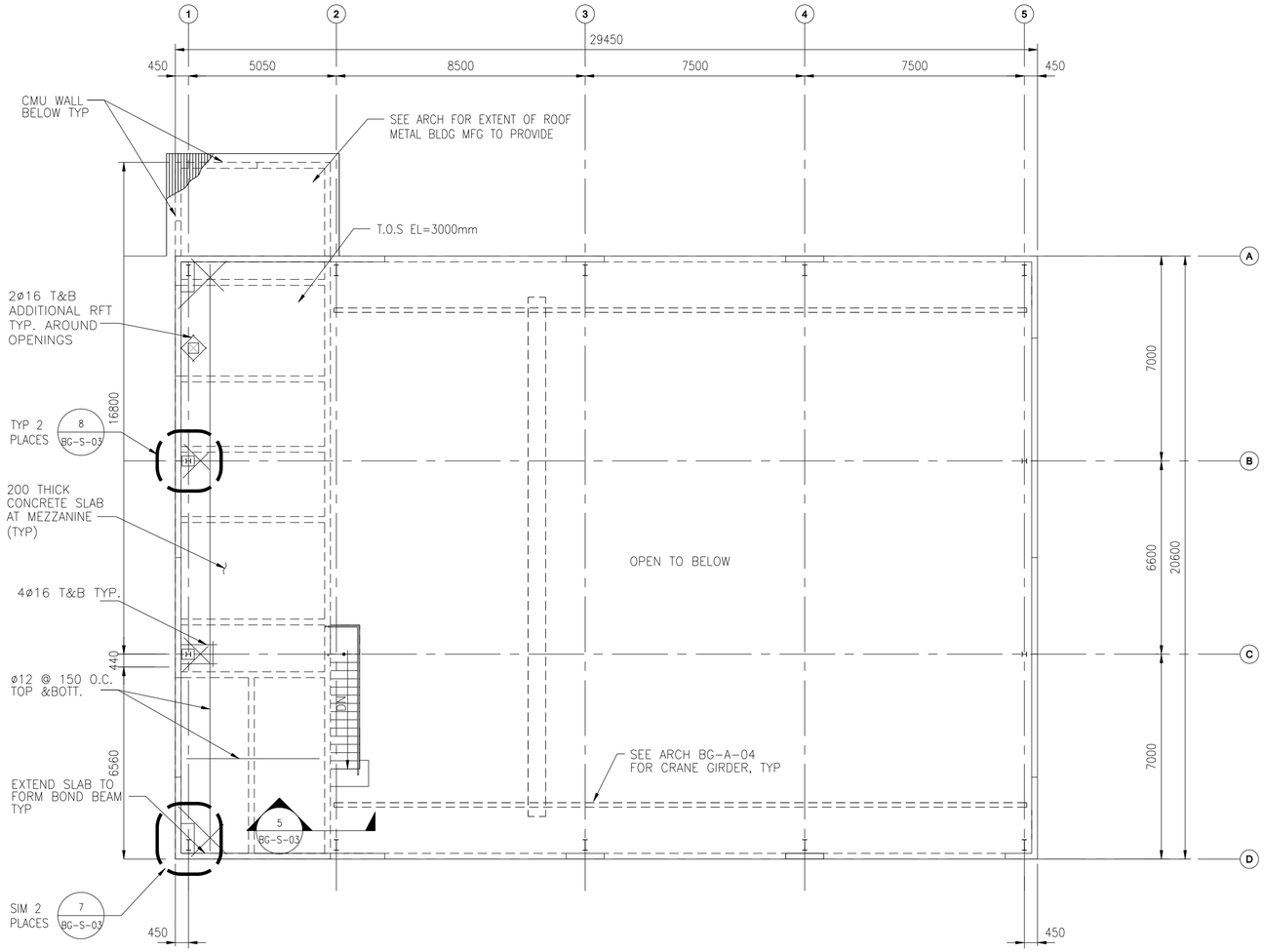

1 MEZZANINE FLOOR FRAMING PLAN

BG-S-02 SCALE: 1:100

NOTE :

1. SEE BG-S-01 FOR CMU CONTROL JOINT LOCATIONS

1 0 1 2 3 4 5 6 7 8 9
1:100

SYMBOL	DESCRIPTION	DATE	APR

DESIGNED BY: TCP
DWN BY: TCP
CHK BY: KGO
DATE: 06-27-07
SUBMITTED BY: CHIEF, PANEL LO PROJECTS DEV
FILE NO.: AF0707 BG-S-02

US Army Corps of Engineers Transatlantic Programs Center

ANA REGIONAL BRIGADE
PAKTIKA, AFGHANISTAN
MAINTENANCE GARAGE(3 BAY)
MEZZANINE FLOOR FRAMING PLAN

SHEET REFERENCE NUMBER:
SK
BG-S-02

$(getvar, "dwgprefix")$(getvar, "dwgname")$(edtime, 0, MON DD", YYYY - H:MMam/pm)

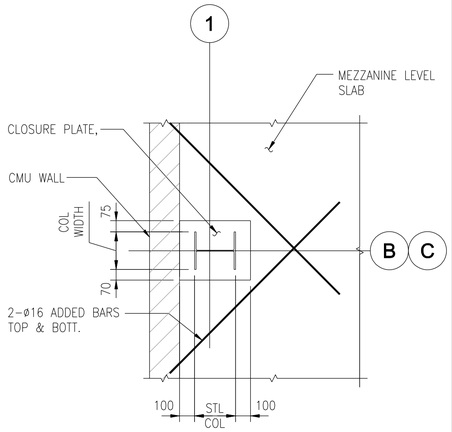

8 PLAN DETAIL

BG-S-03 SCALE: 1:20

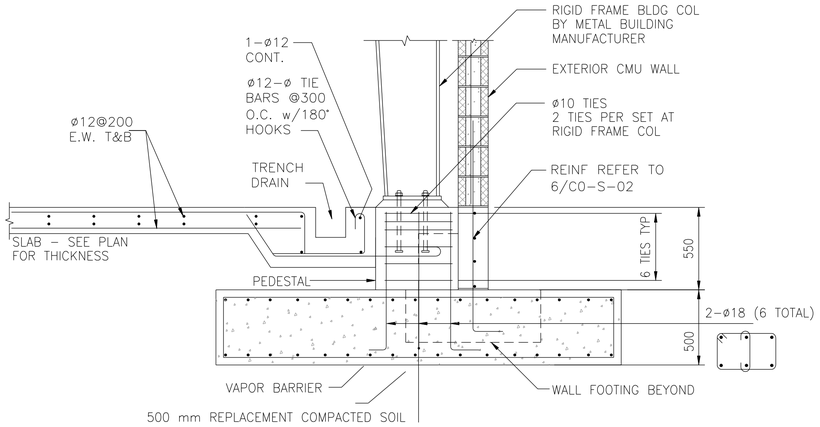

3 SECTION AT BUILDING FOUNDATION

BG-S-03 SCALE: N.T.S

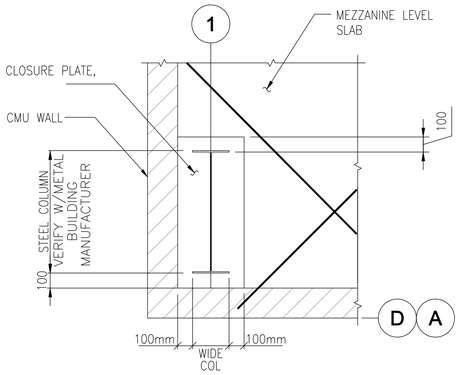

7 PLAN DETAIL

BG-S-03 SCALE: 1:20

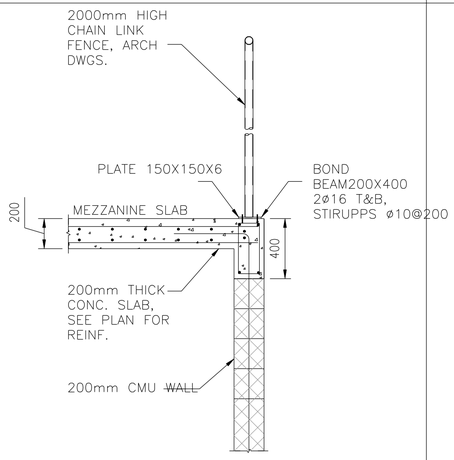

5 SECTION AT CHAIN LINK FENCE

BG-S-03 SCALE: 1:20

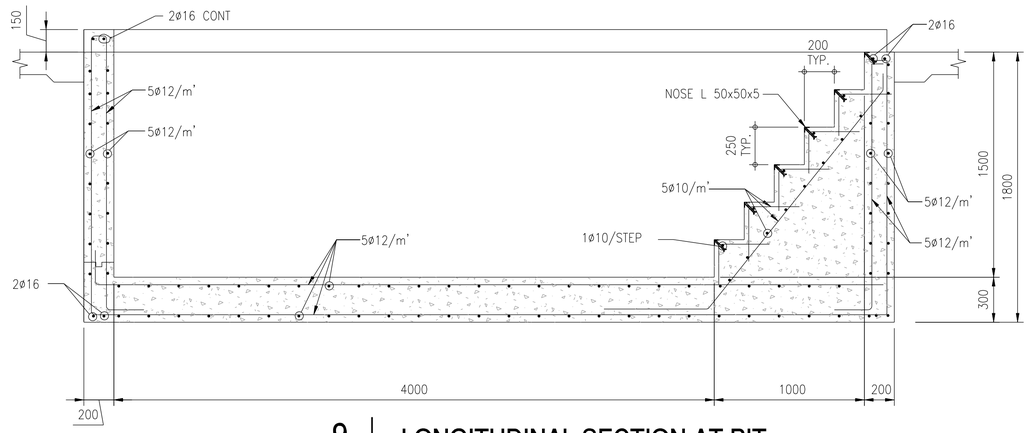

9 LONGITUDINAL SECTION AT PIT

BG-S-03 SCALE: 1:20

1 .50 0 1
1:20

SYMBOL	DESCRIPTION	DATE	APR

DESIGNED BY: TCP
DATE: 06-27-07
DWN BY: TCP
SUBMITTED BY: CHIEF PDI PANELIO DEV PACTES
CHK BY: KGO
FILE NO.: AF0707 BG-S-03

US Army Corps of Engineers Transatlantic Programs Center

ANA REGIONAL BRIGADE
PAKTIKA, AFGHANISTAN

MAINTENANCE GARAGE(3 BAY)
SECTIONS AND DETAILS

SHEET REFERENCE NUMBER:
SK
BG-S-03

$(getvar, "dwgprefix")$(getvar, "dwgname")$(edtime, 0, MON DD",", YYYY - HH:MMam/pm)

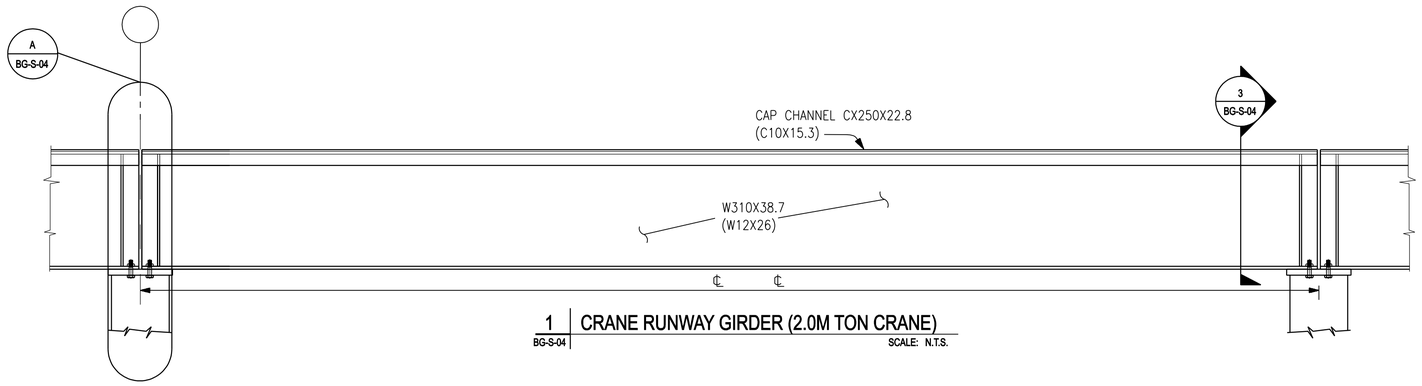

1 | CRANE RUNWAY GIRDER (2.0M TON CRANE)
BG-S-04 | SCALE: N.T.S.

NOTE:

REFER TO ARCHITECTURAL AND STRUCTURAL DRAWINGS FOR LOCATIONS OF 2M-TON CRANE. THE CONTRACTOR SHALL USE CRANE LOADS OF 2M-TON OVERHEAD TRAVELING CRANE DURING DESIGN OF "METAL BUILDING FRAME STRUCTURE AND COLUMN (FRAME) FOOTINGS."

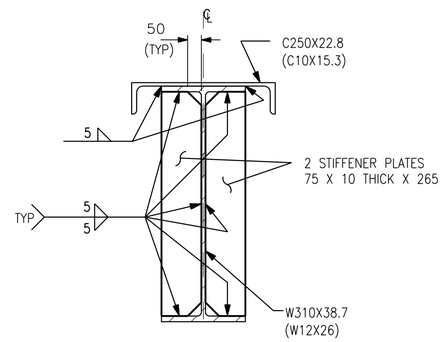

3 | SECTION
BG-S-04 | SCALE: N.T.S.

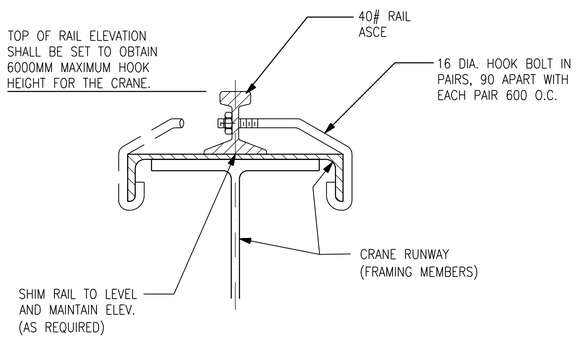

2 | SECTION
BG-S-04 | SCALE: N.T.S.

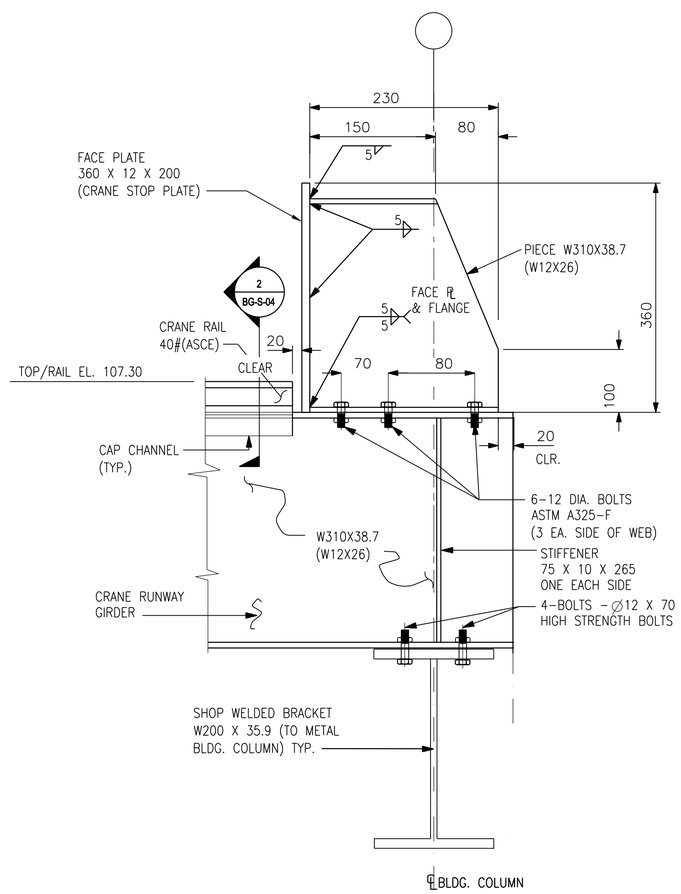

4 | TYPICAL CRANE RUNWAY STOP PLATE (ENDS)
BG-S-04 | SCALE: N.T.S.

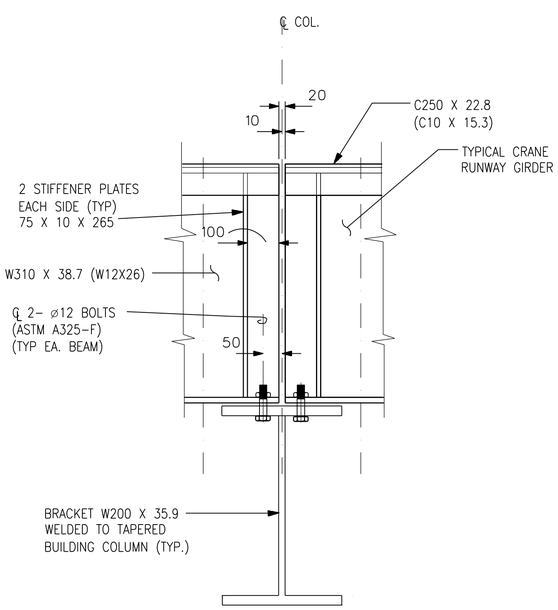

A | DETAIL
BG-S-04 | SCALE: N.T.S.

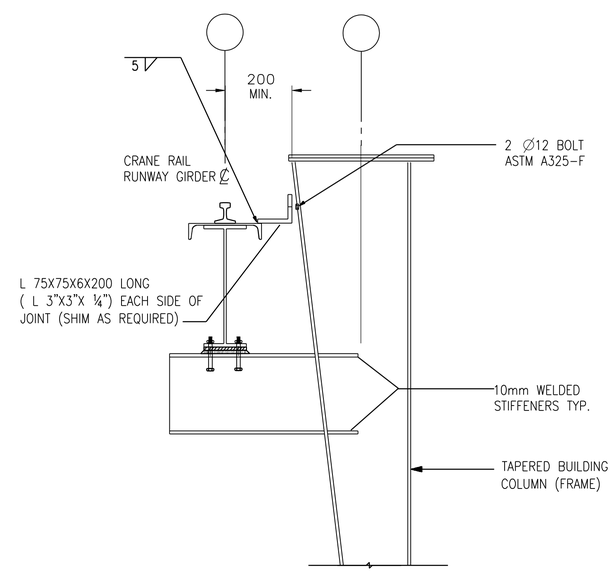

5 | COMBINED COLUMN (CRANE & BLDG.)
BG-S-04 | SCALE: N.T.S.

SYMBOL	DESCRIPTION	DATE	APR

DESIGNED BY: TCP
DATE: 06-27-07
DWN BY: TCP
SUBMITTED BY: PHILLIP J. DINELLO, CHIEF, PM PROJECTS DEV
CHK BY: KGO
FILE NO.: AF0707 SK-BG-S-04

US Army Corps of Engineers
Transatlantic Programs Center

ANA REGIONAL BRIGADE
PAKTIKA, AFGHANISTAN

MAINTENANCE GARAGE(3 BAY)

2M - TON CRANE
SECTIONS AND DETAILS

SHEET REFERENCE NUMBER:
SK
BG-S-04

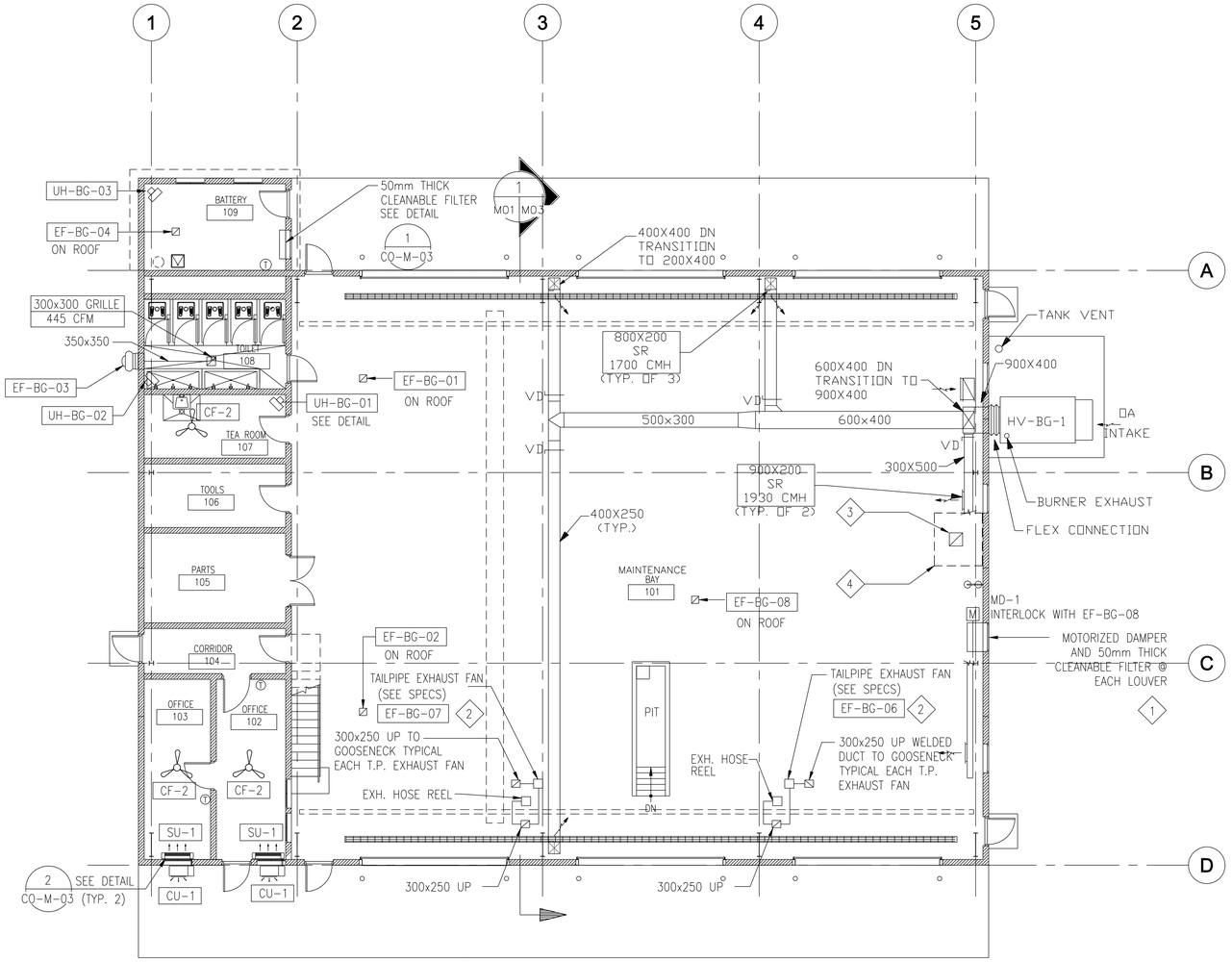

1 MECHANICAL FLOOR PLAN

BG-M-01 SCALE: 1:100

KEY NOTES:

1. FOR DETAIL SEE 1 / CO-M-03 (TYP.)
2. LOCATE EQUIPMENT ABOVE CRANE.
3. 450X450 UP TO EF-BG-05 ON ROOF.
4. WELDING HOOD.

NOTES:

1. FOR STANDARD DETAILS SEE DWG. No. (CO-M-01, 02, 03 & 04).
2. FOR CONTROL DIAGRAMS SEE DWG. No. (CO-M-05).
3. FOR LEGEND AND ABBREVIATION SEE DWG. No. (CO-M-06).

N

ELECTRIC UNIT HEATER SCHEDULE (UH)

UNIT NUMBER	HEATING CAPACITY TOTAL (KW)	AIRFLOW CAPACITY TOTAL (BTUH)	ELECTRICAL DATA VOLTS	PHASE	HERTZ	REMARKS
UH-BG-01	2	510	380	3	50	1, 2
UH-BG-02	2	510	380	3	50	1, 2
UH-BG-03	5	510	380	3	50	1, 2, 3

1. FOR MOUNTING HEIGHT SEE ARCHITECTURAL DRAWINGS.
2. MANUFACTURER SHALL PROVIDE ON-OFF SWITCH AND WITH OVERLOAD PROTECTION IN THE UNIT.
3. EXPLOSION PROOF MOTOR AND SPARK RESISTANCE CONSTRUCTION.

CEILING FAN SCHEDULE (CF)

UNIT NUMBER	TYPE (NOTE 1)	FAN DIAMETER	MAX WATTS	ELECTRICAL DATA VOLTS	PHASE	HERTZ	REMARKS
CF-2	A	56 in	65	220	1	50	3-SPEED

NOTES:-

1- (A) WITHOUT LIGHT FIXTURE
2- BOTTOM OF FAN MOUNTING HEIGHT = MINIMUM 2500mm A.F.F
3- PROVIDE WITH REMOTE WALL MOUNTED, ON-OFF SWITCH LOCATED ON ELECTRICAL DRAWINGS.

EXHAUST FAN SCHEDULE (EF)

UNIT NUMBER	SERVICE	TYPE	AIR QUANTITY CMH	CFM	MINIMUM WHEEL DIAMETER MM	INCHES	FAN RPM	STATIC PRESSURE mmH20	IN W.G.	ELECTRICAL DATA H.P.	VOLTS	PHASE	HERTZ	TEMP CONTROL DIAGRAM	INTERLOCK WITH	DRIVE TYPE	REMARKS
EF-BG-01	EXHAUST	R-CTFG-GP	4420	2600	–	–	1125	12.7	0.5	3/4	380	3	50	E-5	HV-BG-01	DIRECT	NOTE 1
EF-BG-02	EXHAUST	R-CTFG-GP	4420	2600	–	–	1125	12.7	0.5	3/4	380	3	50	E-5	HV-BG-01	DIRECT	NOTE 1
EF-BG-03	EXHAUST	W-CTFG-GP	755	445	–	–	1300	12.7	0.5	1/4	380	3	50	E-4	—	DIRECT	NOTE 1, 2
EF-BG-04	EXHAUST	R-CTFG-EP	595	350	–	–	1325	12.7	0.5	1/4	380	3	50	E-3	—	DIRECT	NOTE 1, 2, 3
EF-BG-05	EXHAUST	R-CTFG-GP	6100	3600	–	–	1370	38	1.5	2	380	3	50	E-4	—	DIRECT	NOTE 1
EF-BG-06	HOSE REEL	CTFG	1185	700	–	–	2995	178	7	1-1/2	380	3	50	E-4	—	DIRECT	
EF-BG-07	HOSE REEL	CTFG	1185	700	–	–	2995	178	7	1-1/2	380	3	50	E-4	—	DIRECT	
EF-BG-08	EXHAUST	R-CTFG-GP	4420	2600	–	–	1125	12.7	0.5	3/4	380	3	50	E-5	HV-BG-01	DIRECT	NOTE 1

MANUFACTURER SHALL PROVIDE NECESSARY TRANSFORMERS ON ALL UNITS TO MEET ELECTRICAL REQUIREMENT.

NOTES:

NOTE 1. SUPPLIED WITH BACKDRAFT DAMPER

NOTE 2. ALL EXHAUST FANS WITH SINGLE PHASE POWER ARE TO BE PROVIDED WITH A FACTORY MOUNTED DISCONNECT SWITCH.

NOTE 3. FAN SHALL BE AMCA OR VDMA TYPA "A" SPARK RESISTANT AND EXPLOSION PROOF CONSTRUCTION. ALL PARTS EXPOSED TO AIR FLOW SHALL BE COATED WITH EPOXY PAINT.

FAN SCHEDULE TYPE – LEGEND
(REF. EXHAUST AND SUPPLY FAN SCHEDULES)
R-CTFG-GP

R =ROOF
W =WALL
IL =INLINE
CL =CEILING

GP = GENERAL PURPOSE
EP = EXPLOSION PROOF
DB = DOWN BLAST
UB = UP BLAST
UT = UTILITY SET

CTFG = CENTRIFUGAL
PROP = PROPELLER
TUBA = TUBE AXIAL

* RADIAL BLADE CENTRIFUGAL WHEEL, AMCA ARR. 10 INDUSTRIAL BLOWER. SEE TAILPIPE EXH. SPEC.

SPLIT SYSTEM AIR CONDITIONING HEAT PUMP SCHEDULE (SU/CU)

UNIT NO.	CAPACITY * (KW) COOLING	HEATING	AIR QUANTITY CMH	ELECTRICAL DATA KW	VOLTS	PH	HZ	REMARKS
SU-1 CU-1	1.5	1.5	615	0.9	220	1	50	HIGH WALL MOUNTED INDOOR UNIT (1)

* MINIMUM EQUIPMENT CAPACITY AS RATED AT 36 °C DB/16.7 °C WB (SUMMER OUTDOOR TEMPERATURE)
AT -12.8 °C DB (WINTER OUTDOOR TEMPERATURE)
AT 2133 M ELEVATION

(1) PROVIDE AUXILIARY ELECTRIC HEATING COIL IN THE INDOOR UNIT TO SUPPLEMENT HEAT PUMP CAPACITY OR TO MEET LOW AMBIENT OPERATIONS IN WINTE. POWER REQUIREMENTS SHALL BE ADJUSTED ACCORDINGLY.

1:100 DRAWING NOT TO SCALE

SYMBOL	DESCRIPTION	DATE	APR

DESIGNED BY: F.MAMOOH
DATE: 06-27-07
DWN BY: A.LATIF
SUBMITTED BY: R. CRESWELL CHIEF, DIST. BLDG SYSTEMS
CHK BY: A.MAKRAM
FILE NO.: ABG-M-01

US Army Corps of Engineers Transatlantic Programs Center

ANA REGIONAL BRIGADE
PAKTIKA, AFGHANISTAN

MAINTENANCE GARAGE (3 BAY)
MECHANICAL FLOOR PLAN AND SCHEDULES

SHEET REFERENCE NUMBER:
SK
BG-M-01

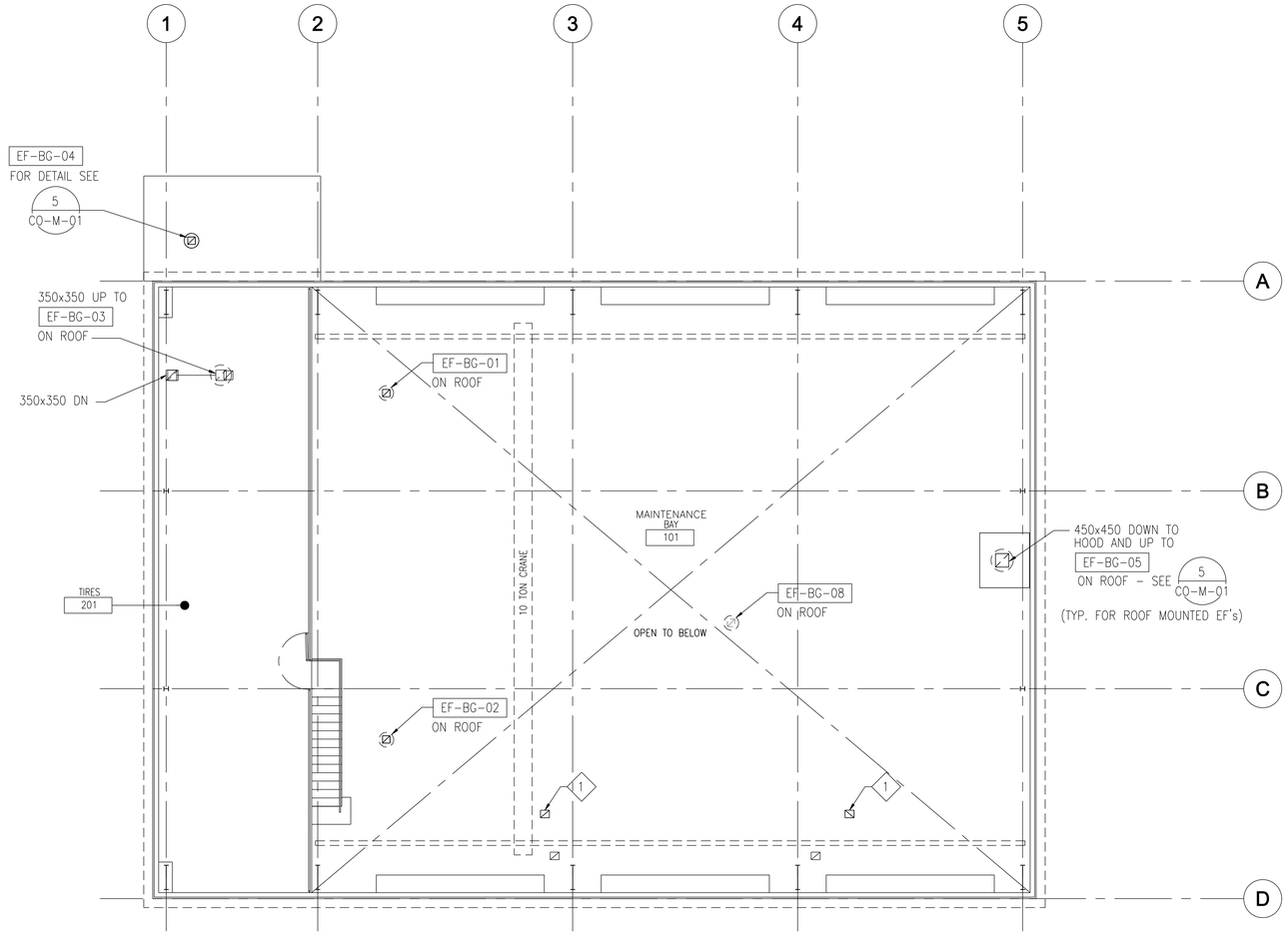

1 MECHANICAL MEZZANINE FLOOR PLAN

BG-M-02 SCALE: 1:100

N

NOTES:

1. FOR STANDARD DETAILS SEE DWG. No. (CO-M-01, 02, 03 & 04).
2. FOR CONTROL DIAGRAMS SEE DWG. No. (CO-M-05).
3. FOR LEGEND AND ABBREVIATION SEE DWG. No. (CO-M-06).

KEY NOTES:

1. GOOSENECK DUCT ON THE ROOF. KEEP DUCT WORK ABOVE CRANE.

SYMBOL	DESCRIPTION	DATE	APR

DESIGNED BY: XXX
DWN BY: XXX
CHK BY: XXX
DATE: 06-27-07
SUBMITTED BY: R. CREWAL CHIEF, PDT BLDG SYSTEMS
FILE NO.: AF0707 BG-M-02

US Army Corps of Engineers Transatlantic Programs Center

ANA REGIONAL BRIGADE
PAKTIKA, AFGHANISTAN

MAINTENANCE GARAGE (3 BAY)
CS & CSS MAINTENANCE GARAGE
MECHANICAL MEZZANINE FLOOR PLAN

SHEET REFERENCE NUMBER:
SK
BG-M-02
1 1

1:100 DRAWING NOT TO SCALE

$(getvar, "dwgprefix")$(getvar, "dwgname")$(edtime, 0, MON DD,"", YYYY - H:MMam/pm)

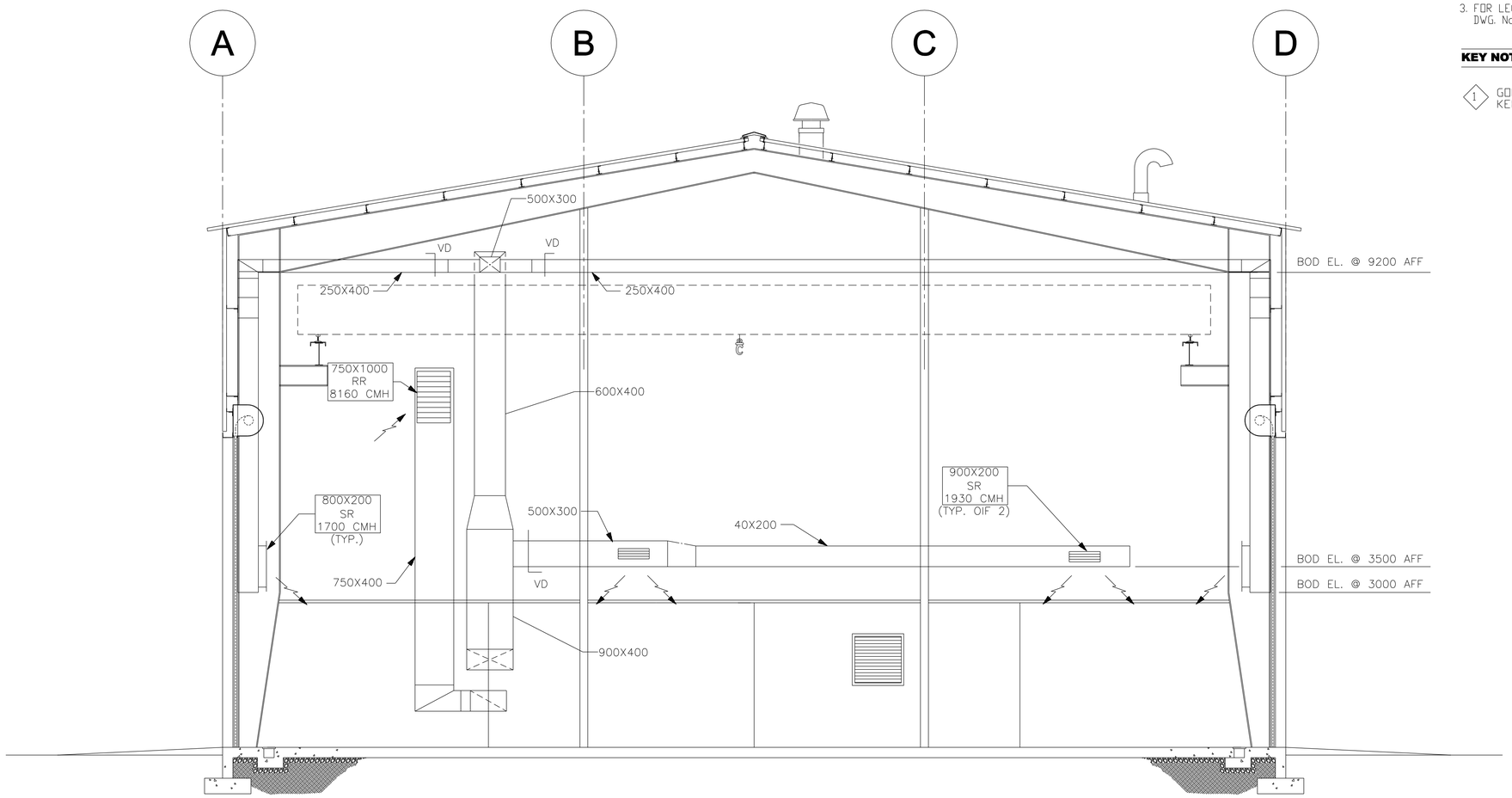

1 SECTION

BG-M-03

SCALE: 1:100

N

NOTES:

1. FOR STANDARD DETAILS SEE DWG. No. (CO-M-01, 02, 03 & 04).
2. FOR CONTROL DIAGRAMS SEE DWG. No. (CO-M-05).
3. FOR LEGEND AND ABBREVIATION SEE DWG. No. (CO-M-06).

KEY NOTES:

1. GOOSENECK DUCT ON THE ROOF. KEEP DUCT WORK ABOVE CRANE.

SYMBOL	DESCRIPTION	DATE	APR

DESIGNED BY: XXX
DATE: 06-27-07
DWN BY: XXX
SUBMITTED BY: R. GREWAL
CHIEF, DIV. BLDG SYSTEMS
CHK BY: XXX
FILE NO.: AF0707 BG-M-03

US Army Corps of Engineers
Transatlantic Programs Center

ANA REGIONAL BRIGADE
PAKTIKA, AFGHANISTAN

MAINTENANCE GARAGE (3 BAY)

SECTION

SHEET REFERENCE NUMBER:
SK
BG-M-03
1 1

1 0 1 2 3 4
1:50

DRAWING NOT TO SCALE

$(getvar, "dwgprefix")$(getvar, "dwgname")$(edtime, 0, MON DD", " YYYY - HH:MMam/pm)

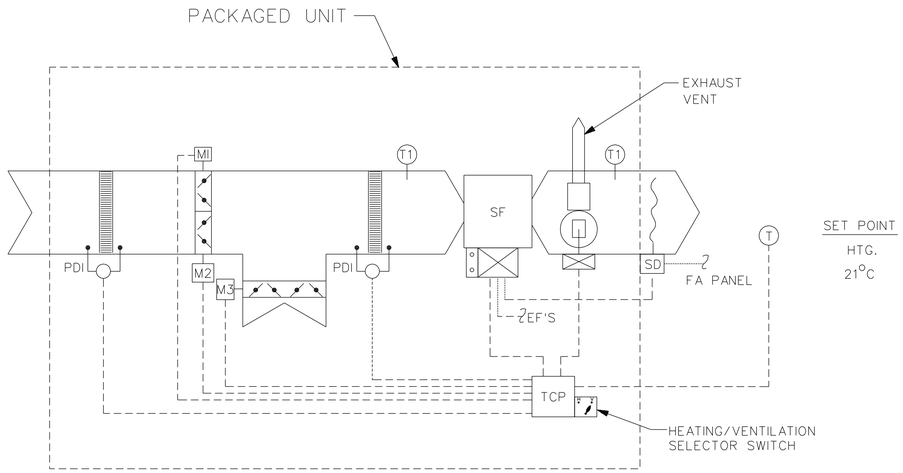

TEMPERATURE CONTROL DIAGRAM
(HV-BG-01)

PACKAGED HEATING-VENTILATION UNIT -SEQUENCE OF OPERATION

START-UP
THE SUPPLY FAN (SF) SHALL BE STARTED MANUALLY BY PLACING THE HAND-OFF-AUTO SWITCH AT THE CONTROL PANEL IN THE HAND POSITION. IN THE AUTO POSITION A PROGRAMMABLE TIME CLOCK SHALL START/STOP THE FAN.

OPERATING MODES
HEATING OR VENTILATION MODE SELECTION SHALL BE CONTROLLED OFF A HEATING-VENTILATION SELECTION SWITCH ON THE CONTROL PANEL. THE UNIT SHALL OPERATE AS A 100% OA VENTILATION UNIT BY PLACING THE MODE SWITCH IN THE VENTILATION MODE. IN THE HEATING MODE THE UNIT SHALL PROVIDE MINIMUM FRESH AIR VENTILATION AND EXHAUST MAKE-UP AIR.

DAMPERS
VENTILATION MODE: THE OUTSIDE AIR (OA) DAMPER M1 AND M2 SHALL BE INTERLOCKED TO OPEN WHEN THE FAN IS ENERGIZED AND CLOSE WHEN FAN IS DEENERGIZED. THE RETURN AIR DAMPER M3 SHALL STAY CLOSED.
HEATING MODE: THE OUTSIDE AIR DAMPER (M1) AND RETURN AIR DAMPER (M3) SHALL OPEN WHEN THE FAN IS ENERGIZED AND CLOSE WHEN THE FAN IS DEENERGIZED. OA DAMPER M2 SHALL STAY CLOSED.

FILTER
PRESSURE DIFFERENTIAL INDICATOR (PDI) PROVIDES LOCAL INDICATION OF PRESSURE DROP ACROSS THE FILTER. ON A RISE IN PRESSURE DROP TO ITS SET POINT, PRESSURE DIFFERENTIAL SWITCH SHALL TURN ON THE DIRTY FILTER ALARM LIGHT AT THE CONTROL PANEL.

TEMPERATURE CONTROL
HEATING (WINTER) MODE: THE DIESEL OIL HEATER (DH) SHALL BE STAGED BY A SPACE THERMOSTAT (T) TO CONTROL THE SUPPLY AIR TEMPERATURE OFF THE UNIT.
VENTILATION (SUMMER) MODE: HEATER CONTROLS SHALL BE LOCKED OUT DURING THE SUMMER MODE.
FAN INTERLOCKS
THE SMOKE DETECTOR (SD) SHALL BE INTERLOCKED TO STOP THE SUPPLY FAN (SF) IN THE EVENT OF SMOKE IN THE SUPPLY DUCT. THE SMOKE DETECTOR SHALL BE CONNECTED TO THE BUILDING FIRE ALARM PANEL.

THE EXHAUST FANS (EF) INDICATED IN THE HCU UNIT SCHEDULE SHALL BE INTERLOCKED TO RUN WITH THE SUPPLY FAN (SF).

(PACKAGED) HEATING-VENTILATION UNIT (HV)

UNIT NUMBER	OUTSIDE AIR		FAN SECTION			FILTER SECTION				DIESEL HEATER SECTION			ELECTRICAL DATA			CONTROL DIAGRAM	INTERLOCKED EQUIPMENT	REMARKS
	SUMMER CMH	HEATING CMH	TOTAL CMH	EXTERNAL SP (MM-WG)	HP	FACE VELOCITY MPS	EFF. %	AIR PRESSURE DROP (MM-WG) INT	AIR PRESSURE DROP (MM-WG) FNL	OUTPUT CAPACITY KW	TEMP. RISE °C	EFF. %	VOLTS	PHASE	HERTZ			
HV-BG-01	10,000	5,200	10,000	20	5	2.54	35			73	21	85	380	3	50	SEE SHEET BG-M-04	EF-BG-01 EF-BG-02	NOTES 1,2,3

1. MANUFACTURER SHALL PROVIDE NECESSARY TRANSFORMERS ON ALL UNITS TO MEET ELECTRICAL CONTROL REQUIREMENTS.
2. EF-BG-01 IS INTERLOCKED TO RUN IN HEATING MODE; EF-BG-01 AND EF-BG-02 BOTH ARE INTERLOCKED TO RUN IN VENTILATION MODE.
3. PROVIDE 600 LITER STEEL TANK FOR FUEL STORAGE.

DRAWING NOT TO SCALE

SYMBOL	DESCRIPTION	DATE	APR

DESIGNED BY: XXX
DATE: 06-27-07
DWN BY: XXX
SUBMITTED BY: R. GREWAL, CHIEF, DPT BLDG SYSTEMS
CHK BY: XXX
FILE NO.: AF0707 BG-M-04

US Army Corps of Engineers
Transatlantic Programs Center

ANA REGIONAL BRIGADE
PAKTIKA, AFGHANISTAN

MAINTENANCE GARAGE (3 BAY)

TEMPERATURE CONTROL DIAGRAM

SHEET REFERENCE NUMBER:
SK
BG-M-04
1 1

$(getvar, "dwgprefix")$(getvar, "dwgname")$(edtime, 0, MON DD"," YYYY - HHMMam/pm)

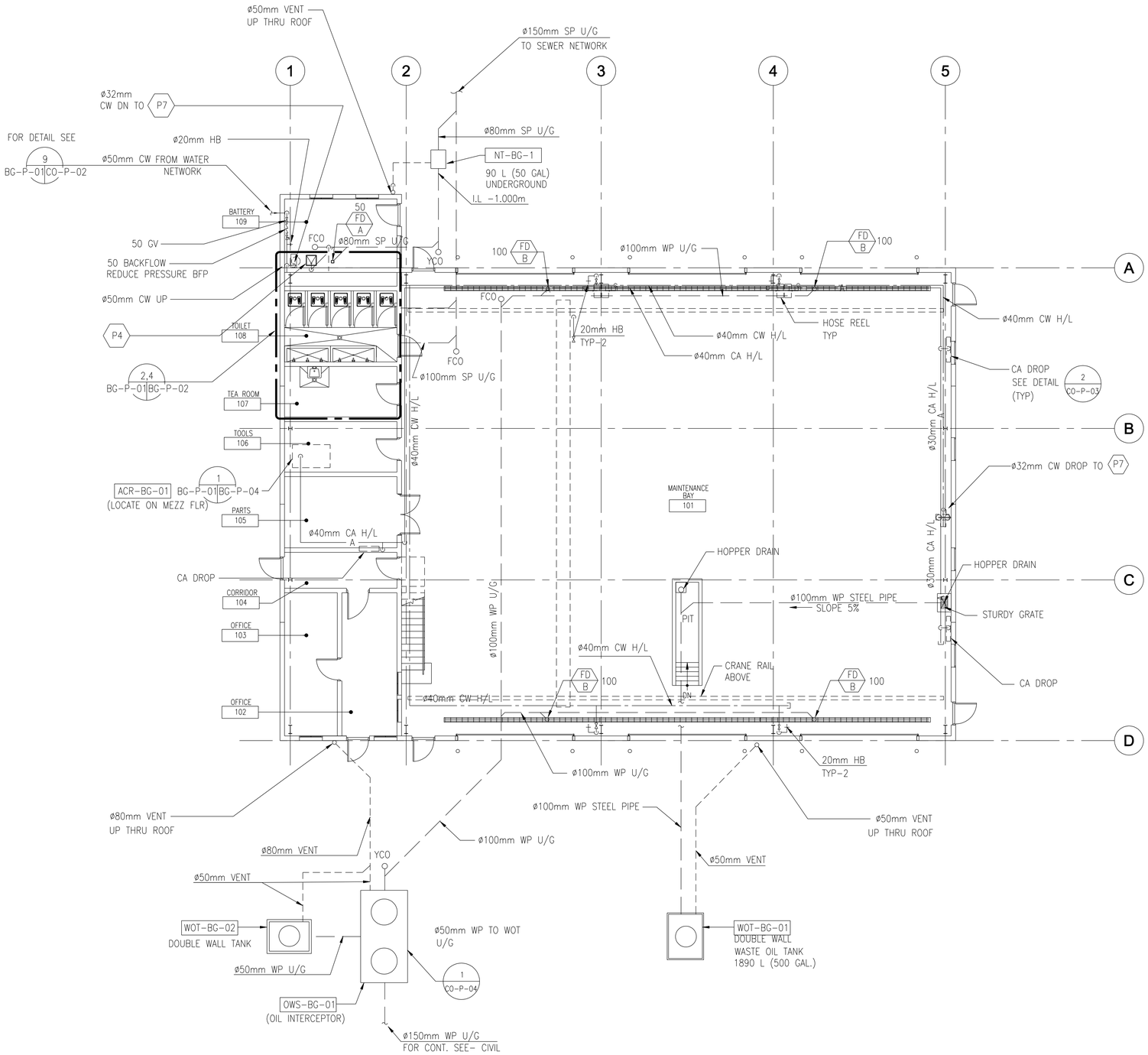

1 PLUMBING FLOOR PLAN

BG-P-01 SCALE: 1:100

NOTES:

1. FOR PLUMBING LEGEND, ABBREVIATIONS, NOTES, SCHEDULES, AND STANDARD DETAILS SEE SHEETS CO-P-01 THRU CO-P-07.
2. FOR NT SCHEDULE AND AIR COMPRESSOR SEE BG-P-03.
3. LEVEL REFEREED TO 0.00 LEVEL (F.F.L)

1 0 1 2 3 4 5 6 7 8 9
1:100

SYMBOL	DESCRIPTION	DATE	APR

DESIGNED BY: HANNAN E. DATE: 24-08-06
DWN BY: HANNAN M. SUBMITTED BY: R. GREWAL
CHK BY: G. YAWAB CHIEF, PDT BLDG SYSTEMS
FILE NO.: A20-P091

US Army Corps of Engineers Transatlantic Programs Center

ANA REGIONAL BRIGADE
PAKTIKA, AFGHANISTAN

MAINTENANCE GARAGE (3 BAY)

PLUMBING FLOOR PLAN

SHEET REFERENCE NUMBER:
SK
BG-P-01
1 1

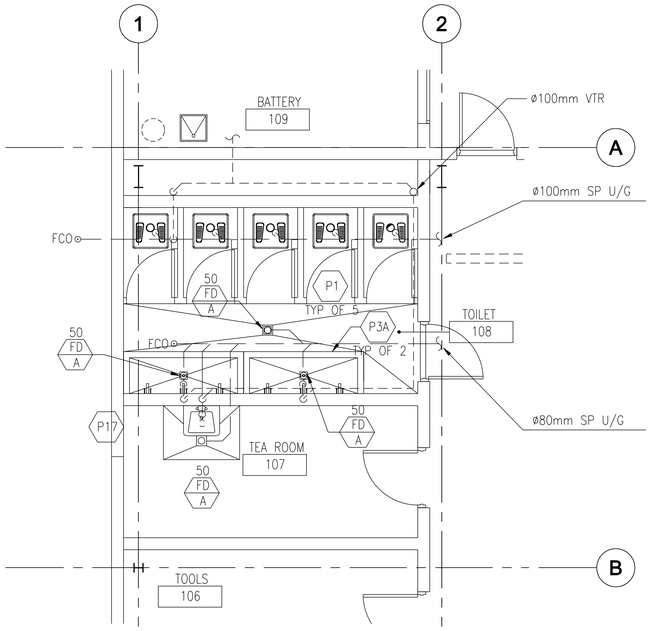

1 PLUMBING ENLARGED PLAN-DRAINAGE

BG-P-02 SCALE: 1:50

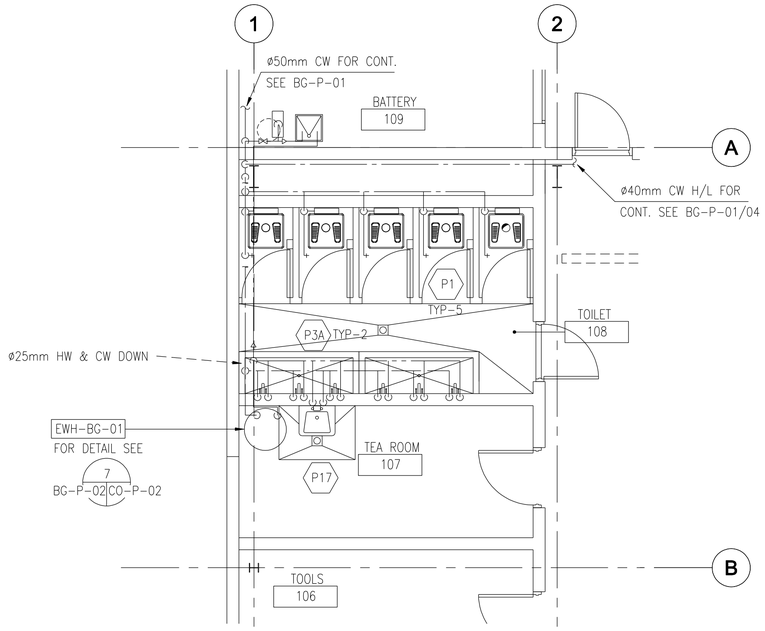

2 PLUMBING ENLARGED PLAN-WATER

BG-P-02 SCALE: 1:50

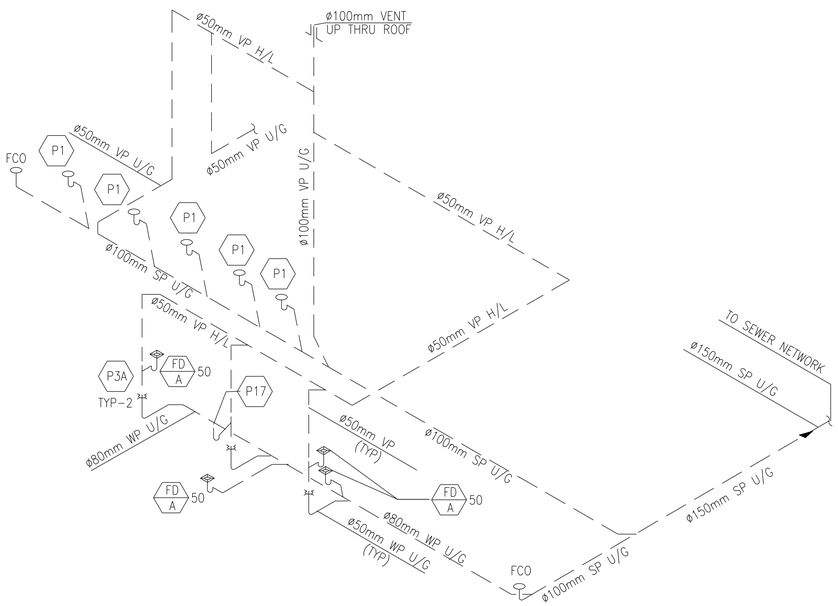

3 DRAINAGE RISER DIAGRAM

BG-P-02 SCALE: N.T.S

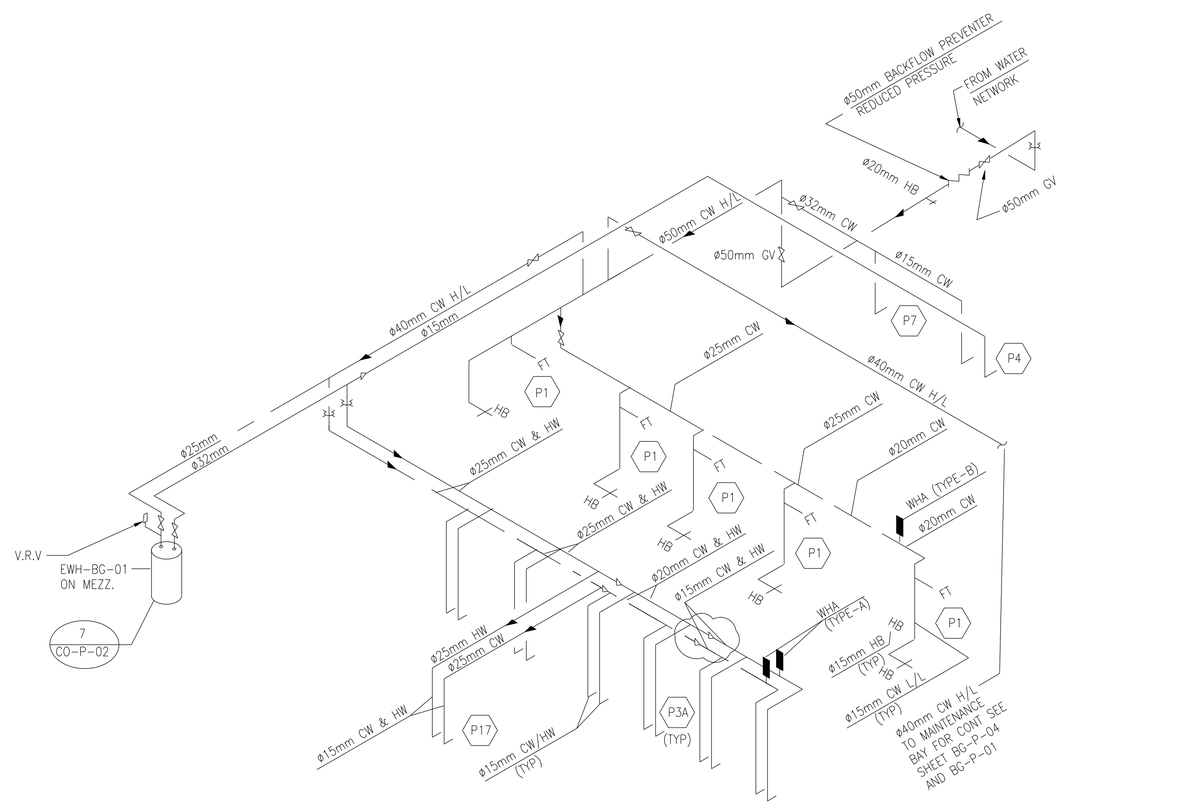

4 COLD AND HOT WATER RISER DIAGRAM

BG-P-02 SCALE: N.T.S

1:50

SYMBOL	DESCRIPTION	DATE	APR

DESIGNED BY: HAMXX E.
DATE: 24-08-07
DWN. BY: HAMXX M.
SUBMITTED BY: R. GREWAL CHIEF, BLDG SYSTEMS
CHK. BY: G. XAWAB
FILE NO.: A-P-02

US Army Corps of Engineers Transatlantic Programs Center

ANA REGIONAL BRIGADE
PAKTIKA, AFGHANISTAN

MAINTENANCE GARAGE (3 BAY)
ENLARGED PLUMBING PLANS AND DIAGRAMS

SHEET REFERENCE NUMBER:
SK
BG-P-02
1 1

NEUTRALIZATION TANK SCHEDULE (NT)

SYMBOL	SERVICE	CAPACITY LITERS (GAL)	LOCATION	DIMENSIONS (NOMINAL)	REMARKS
NT-BG-1		90 (50)	UNDERGROUND	MANUFACTURER'S STANDARD	DOUBLEWALL UNDERGROUND TANK, WITH TANK EXTENSION TO GRADE LEVEL. TANK MATERIAL SHALL BNE HIGH DENSITY POLYETHYLENE (HDPE) CONFORMING TO ASTM D1248 OR POLYPROPYLENE CONFORMING TO ASTM D-1401. 80mm INLET, OUTLET, NEUTRALIZER ADDITION AND VENT CONNECTIONS. SUITABLE FOR UNDERGROUND INSTALLATION. INSTALL AS PER MANUFACTURER'S RECOMMENDATIONS.

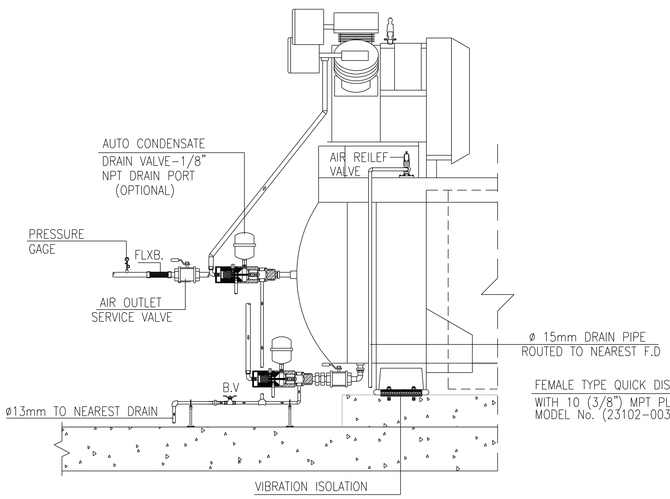

1 COMPRESSOR DRAIN DETAIL

BG-P-03 SCALE: N.T.S

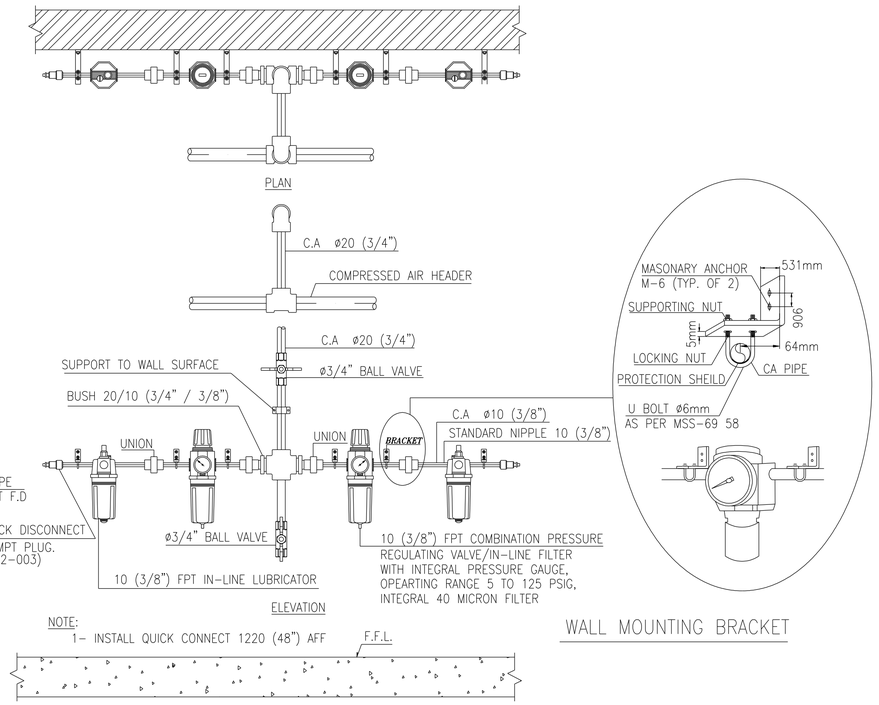

2 COMPRESSED AIR DROP

BG-P-03 SCALE: N.T.S

WALL MOUNTING BRACKET

NOTES:

1. PIPING AND VALVES SAME MATERIAL AS SPEC. FOR MAIN LINE. 15 (1/2")
2. TEST TEE WITH PLUGGED BRANCH 8 (1/4") MIN. SIZE.
3. WELD-O-LET OR THREAD-O-LET AS SPECIFIED FOR MAIN LINE.
4. REDUCE AS REQUIRED TO FIT PRESSURE GAUGE.

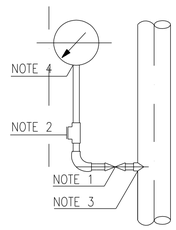

3 LINE MOUNTED ON VERTICAL PIPE

BG-P-03 SCALE: N.T.S

NOTE:

1. FOR PLUMBING LEGEND, ABBREVIATIONS, NOTES, SCHEDULES, AND STANDARD DETAILS SEE SHEETS CO-P-01 THRU CO-P-07.

SYMBOL	DESCRIPTION	DATE	APR

DESIGNED BY: HAMAX E. DATE: 24-08-06 07-07
DWN BY: HAMX.M. SUBMITTED BY: R. GREWAL
CHK BY: G. YAWAB CHIEF, DIV BLDG SYSTEMS
FILE NO.: AP-P093

US Army Corps of Engineers Transatlantic Programs Center

ANA REGIONAL BRIGADE
PAKTIKA, AFGHANISTAN

MAINTENANCE GARAGE (3 BAY)
PLUMBING EQUIPMENT SCHEDULES & COMPRESSED AIR SYSTEM DETAILS

SHEET REFERENCE NUMBER:
SK
BG-P-03
1 1

$(getvar, "dwgprefix")$(getvar, "dwgname")$(edtime, 0, MON DD",", YYYY - HHMMam/pm)

NOTE:

1. FOR PLUMBING LEGEND, ABBREVIATIONS, NOTES, SCHEDULES, AND STANDARD DETAILS SEE SHEETS CO-P-01 THRU CO-P-07.

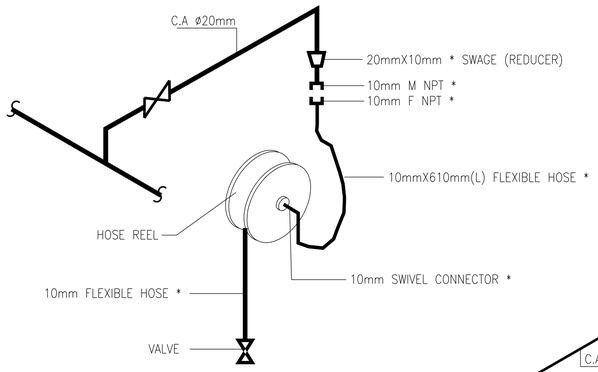

* SIZE TO MATCH REEL HOSE SIZE BEING USED.

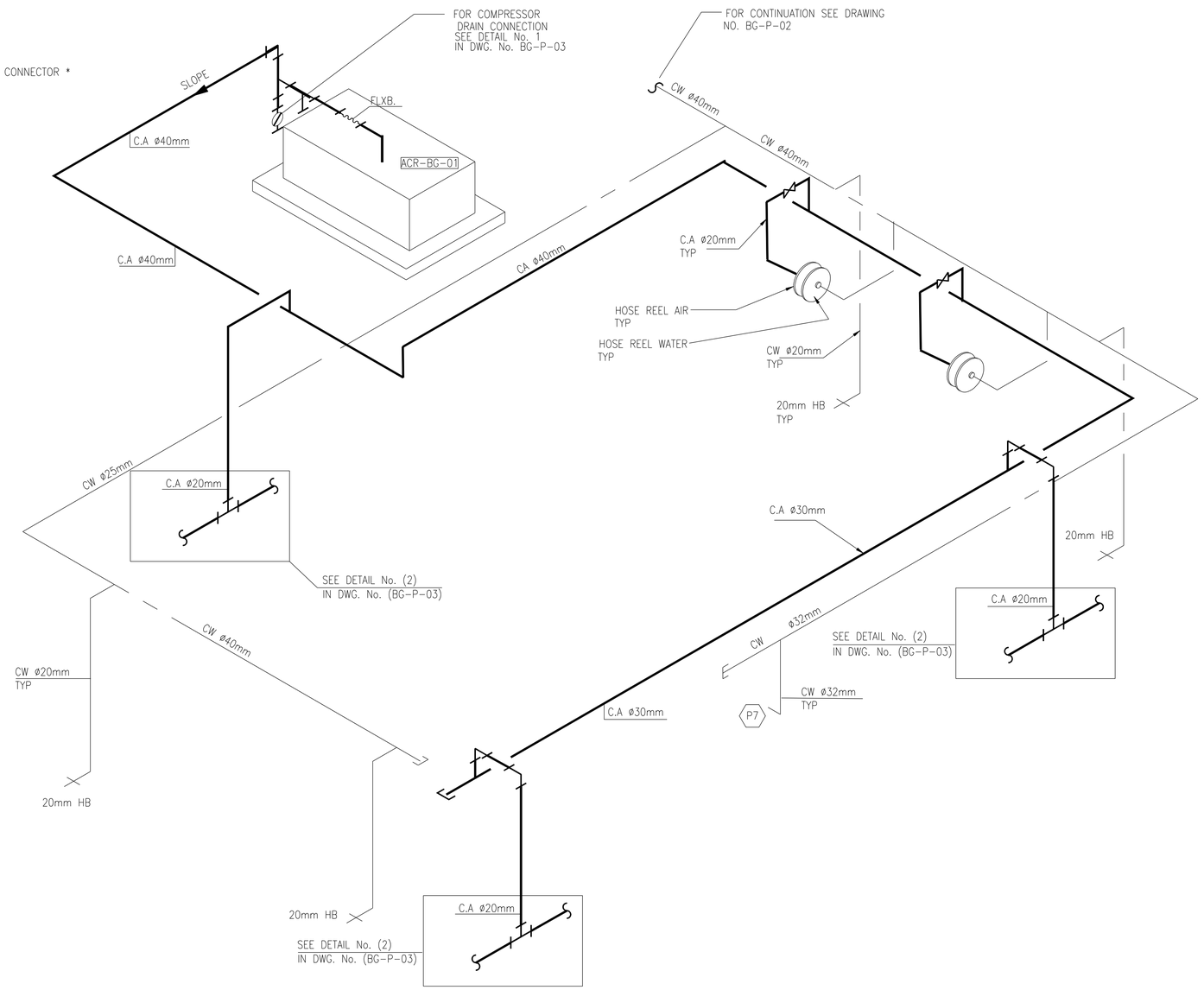

1 COMPRESSED AIR RISER DIAGRAM

BG-P-04 | REF: | SCALE: N.T.S

SYMBOL	DESCRIPTION	DATE	APR

DESIGNED BY: HANXX E. | DATE: 24-08-07

DWN. BY: HANXX M. | SUBMITTED BY: R. GREWAL CHIEF, PDT, BLDG SYSTEMS

CHK. BY: G. XAWAB | FILE NO.: AR-P-04

US Army Corps of Engineers Transatlantic Programs Center

ANA REGIONAL BRIGADE
PAKTIKA, AFGHANISTAN

MAINTENANCE GARAGE (3 BAY)
COMPRESSED AIR SYSTEM
RISER DIAGRAM

SHEET REFERENCE NUMBER:
SK
BG-P-04
1 1

$(getvar, "dwgprefix")$(getvar, "dwgname")$(edtime, O, MON DD",", YYYY - HHMMam/pm)

CS BATALLION GARAGE
PANEL PP

AIC: 25KA
200AT/200AF MCB
200A BUS
VOLTAGE 380/220V, 3PH, 5W, 50HZ

FEED TOP
MOUNTING SURFACE
LOCATION CORRIDOR 104

DESCRIPTION	LOAD (VA) A	B	C	AMP	POLE	CKT	A B C	CKT	POLE	AMP	LOAD (VA) A	B	C	DESCRIPTION
	239					1		2			467			
EF-BG-01& MD1,2		239		20	3	3		4	3	20		467		EF-BG-06
			239			5		6					467	
	239					7		8			467			
EF-BG-02 & MD1,2		239		20	3	9		10	3	20		467		EF-BG-07
			239			11		12					467	
	622					13		14	1	20	1125			SU-1 102
EF-BG-05		622		20	3	15		16	1	20		1125		SU-1 103
			622			17		18	1	20			100	CF-2 RM#107
	1833					19		20	1	20				SPARE
ACR-BG-01		1833		30	3	21		22				239		
			1833			23		24	3	20			239	EF-BG-08
	8000					25		26			239			
10 TON CRANE SYSTEM		8000		50	3	27		28	1	20		600		FOR FUTURE SELF SMOKE DETECTOR
			8000			29		30	1	20			600	FOR FUTURE SELF SMOKE DETECTOR
	85				1	31		32	1	20				SPARE
EF-BG-04		85		20	3	33		34	1	20				SPARE
			85		1	35		36	1	20				SPARE
SPARE				20	1	37		38			15640.6			
FOR FUTURE SELF SMOKE DETECTOR		600		20	1	39		40	3	100		14380.6		PANEL PP1
FOR FUTURE SELF SMOKE DETECTOR			500	20	1	41		42					13820.6	
SUB-TOTALS=	11018	11618	11518								17938.6	16678.6	15693.6	= SUB-TOTALS

	V A	AMPS
TOTAL PHASE A=	28956.6	131.62
TOTAL PHASE B=	28296.6	128.62
TOTAL PHASE C=	27211.6	123.7
TOTAL CONNECTED LOAD	84.5	KVA
DEMAND FACTOR	0.95	
DEMAND LOAD	80.3	KVA
20% FUTURE LOAD	16.1	KVA
TOTAL LOAD	96.4	KVA
TOTAL AMPERE	146.56	AMP

CS BATALLION GARAGE
PANEL PP1

AIC: 25KA
100A MCB
MLO
VOLTAGE 380/220V, 3PH, 5W, 50HZ

FEED BOTTOM
MOUNTING SURFACE
LOCATION CORRIDOR 104

DESCRIPTION	LOAD (VA) A	B	C	AMP	POLE	CKT	A B C	CKT	POLE	AMP	LOAD (VA) A	B	C	DESCRIPTION
LIGHTING-RMS 104-108	1520			20	1	1		2	1	20	885			LIGHTING-RM 201
LIGHTING-BATTERY RM		200		20	1	3		4	1	20		1765		LIGHTING-RM 101
SPARE				20	1	5		6	1	20			1765	LIGHTING-RM 101
CF-2	200			20	1	7		8	1	20	1800			RECEPTACLE-RM 101
TTC RECEP		180		20	1	9		10	1	20		1600		RECEPTACLE-RMS 101,106,107
TTC RECEP			180	20	1	11		12	1	20				SPARE
	2550					13		14	1	20	400			RECEPTACLE-RM 109
HV-BG-01		2550		20	3	15		16				3000		
			2550			17		18	3	30			3000	WELDING RECEPTACLE
	2000					19		20			3000			
EWH-BG-01		2000		20	3	21		22				667		
			2000			23		24	3	20			667	UH-BG-02
	1666.6					25		26			667			
UH-BG-01		1666.6		20	3	27		28				667		
			1666.6			29		30	3	20			667	UH-B6-03
LIGHTING PIT	200			20	1	31		32			667			
SPARE				20	1	33		34	1	20				SPARE
LIGHTING 102,103			1240	20	1	35		36	1	20				SPARE
	85					37		38	1	20				SPARE
EF-BG-03		85		20	3	39		40	1	20				SPARE
			85			41		42	1	20				SPARE
SUB-TOTALS=	8221.6	6681.6	7721.6								7419	7699	6099	= SUB-TOTALS

	V A	AMPS
TOTAL PHASE A=	15640.6	71.1
TOTAL PHASE B=	14380.6	65.4
TOTAL PHASE C=	13820.6	62.8
TOTAL CONNECTED LOAD	43.84	KVA
DEMAND FACTOR	0.936	
DEMAND LOAD	41.0	KVA
20% FUTURE LOAD	8.2	KVA
TOTAL LOAD	49.2	KVA
TOTAL AMPERE	74.84	AMP

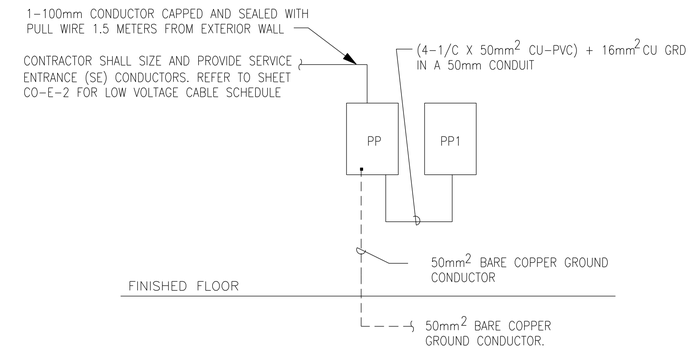

1 POWER RISER DIAGRAM
BG-E-01 SCALE: N.T.S.

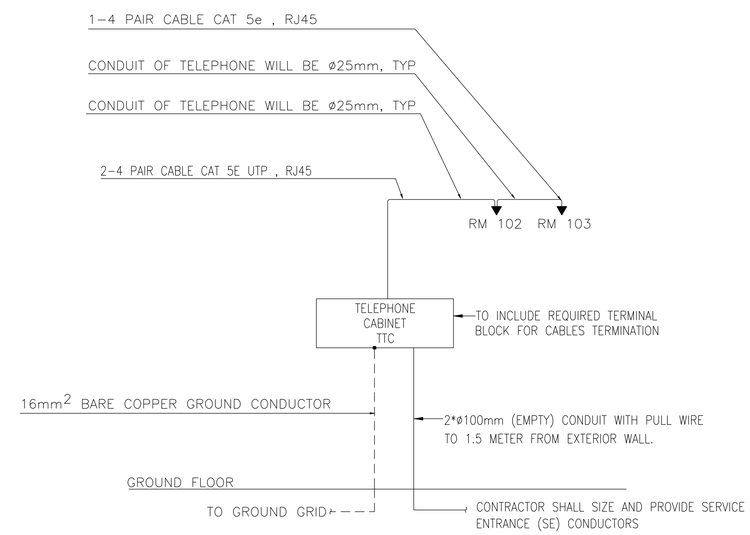

2 TELEPHONE RISER DIAGRAM
BG-E-01 SCALE: N.T.S.

NOTES:

1. SEE SHEET CO-E-01 FOR SYMBOLS ABBREVIATIONS AND GENERAL NOTES
2. SEE SHEET CO-E-02 FOR CABLE SCHEDULE.

DRAWING NOT TO SCALE

SYMBOL	DESCRIPTION	DATE	APR

DESIGNED BY: XXX
DATE: 06-27-07
DWN BY: XXX
SUBMITTED BY: R. CREWAL CHIEF, FOD BLDG SYSTEMS
CHK BY: XXX
FILE NO.: AF0707BG-E-01

US Army Corps of Engineers Transatlantic Programs Center

ANA REGIONAL BRIGADE
PAKTIKA, AFGHANISTAN
MAINTENANCE GARAGE (3 BAY)
PANEL SCHEDULE AND RISER DIAGRAMS

SHEET REFERENCE NUMBER:
SK
BG-E-01

$(getvar, "dwgprefix")$(getvar, "dwgname")$(edtime, 0, MON DD"", YYYY - HH:MMam/pm)

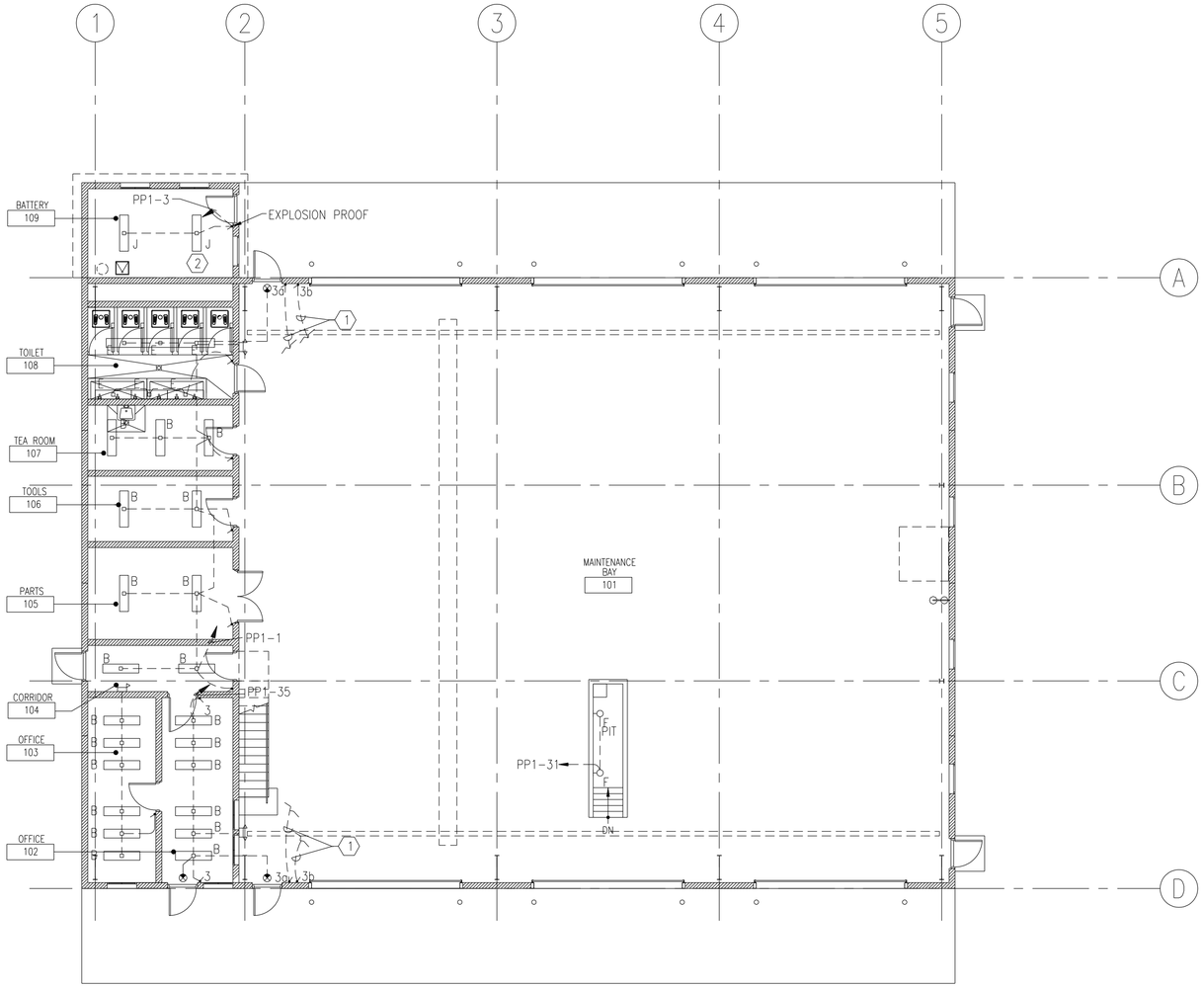

1 LIGHTING PLAN–GROUND FLOOR
BG-E-02 SCALE: 1:100

KEY NOTES:

1. UP TO LIGHT FIXTURE, SEE SHEET BG-E-03 FOR CONTINUATION.
2. ELECTRICAL INSTALLATION IN THIS AREA SHALL COMPLY WITH NEC CLASS 1, DIV 2 REQUIREMENTS.

NOTES:

1. SEE SHEET CO-E-01 FOR SYMBOLS, ABBREVIATIONS AND GENERAL NOTES.
2. SEE SHEET CO-E-02 FOR LIGHTING FIXTURE SCHEDULE.

1 0 1 2 3 4 5 6 7 8 9
1:100

SYMBOL	DESCRIPTION	DATE	APR

DESIGNED BY: XXX	DATE: 06-27-07		
DWN BY: XXX	SUBMITTED BY: R. CREWAL CHIEF, BLDG SYSTEMS		
CHK BY: XXX	FILE NO.: AF0707 BG-E-02		

US Army Corps of Engineers Transatlantic Programs Center

ANA REGIONAL BRIGADE
PAKTIKA, AFGHANISTAN

MAINTENANCE GARAGE (3 BAY)
CS & CSS MAINTENANCE GARAGE
LIGHTING PLAN GROUND FLOOR

SHEET REFERENCE NUMBER:
SK
BG-E-02

$(getvar, "dwgprefix")$(getvar, "dwgname")$(edtime, 0, MON DD", YYYY - HH:MMam/pm)

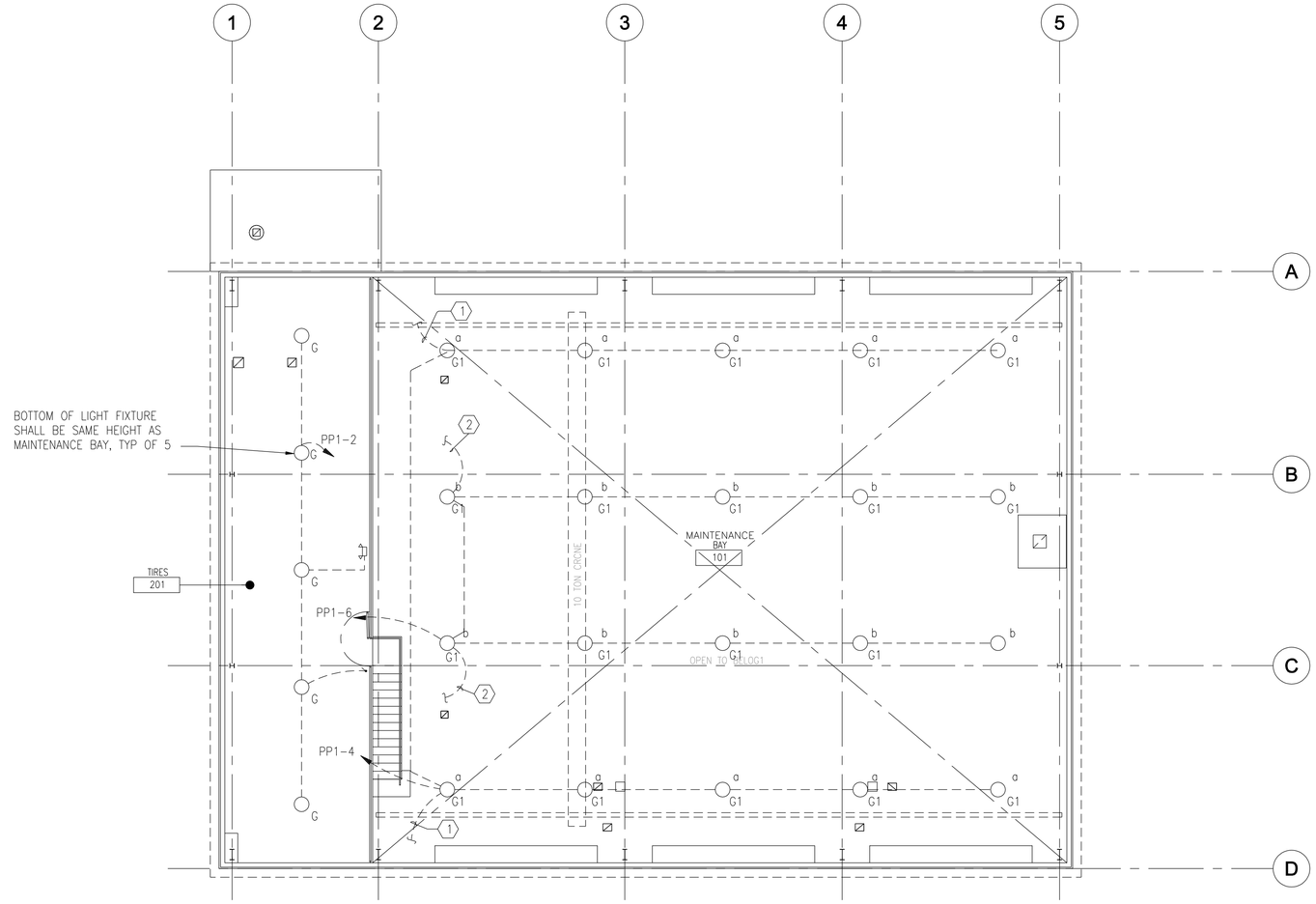

1 LIGHTING PLAN–AT UNDERSIDE OF ROOF

BG-E-03 SCALE: 1:100

KEY NOTES:

1. TO LIGHT SWITCH "3a" LOCATED BELOW. SEE SHEET BG-E-02 FOR CONTINUATION.
2. TO LIGHT SWITCH "3b" LOCATED BELOW. SEE SHEET BG-E-02 FOR CONTINUATION.

NOTES:

1. SEE SHEET CO-E-01 FOR SYMBOLS, ABBREVIATIONS AND GENERAL NOTES.
2. SEE SHEET CO-E-02 FOR LIGHTING FIXTURE SCHEDULE.

1 0 1 2 3 4 5 6 7 8 9
1:100

SYMBOL	DESCRIPTION	DATE	APR

DESIGNED BY: XXX
DWN BY: XXX
CHK BY: XXX
DATE: 06-27-07
SUBMITTED BY: R. CREWAL CHIEF, BLDG SYSTEMS
FILE NO.: AF0707 BG-E-03

US Army Corps of Engineers Transatlantic Programs Center

ANA REGIONAL BRIGADE
PAKTIKA, AFGHANISTAN

MAINTENANCE GARAGE (3 BAY)
CS & CSS MAINTENANCE GARAGE
LIGHTING PLAN–
AT UNDERSIDE OF ROOF

SHEET REFERENCE NUMBER:
SK
BG-E-03

$(getvar, "dwgprefix")$(getvar, "dwgname")$(edtime, 0, MON DD", " YYYY - HHMMam/pm)

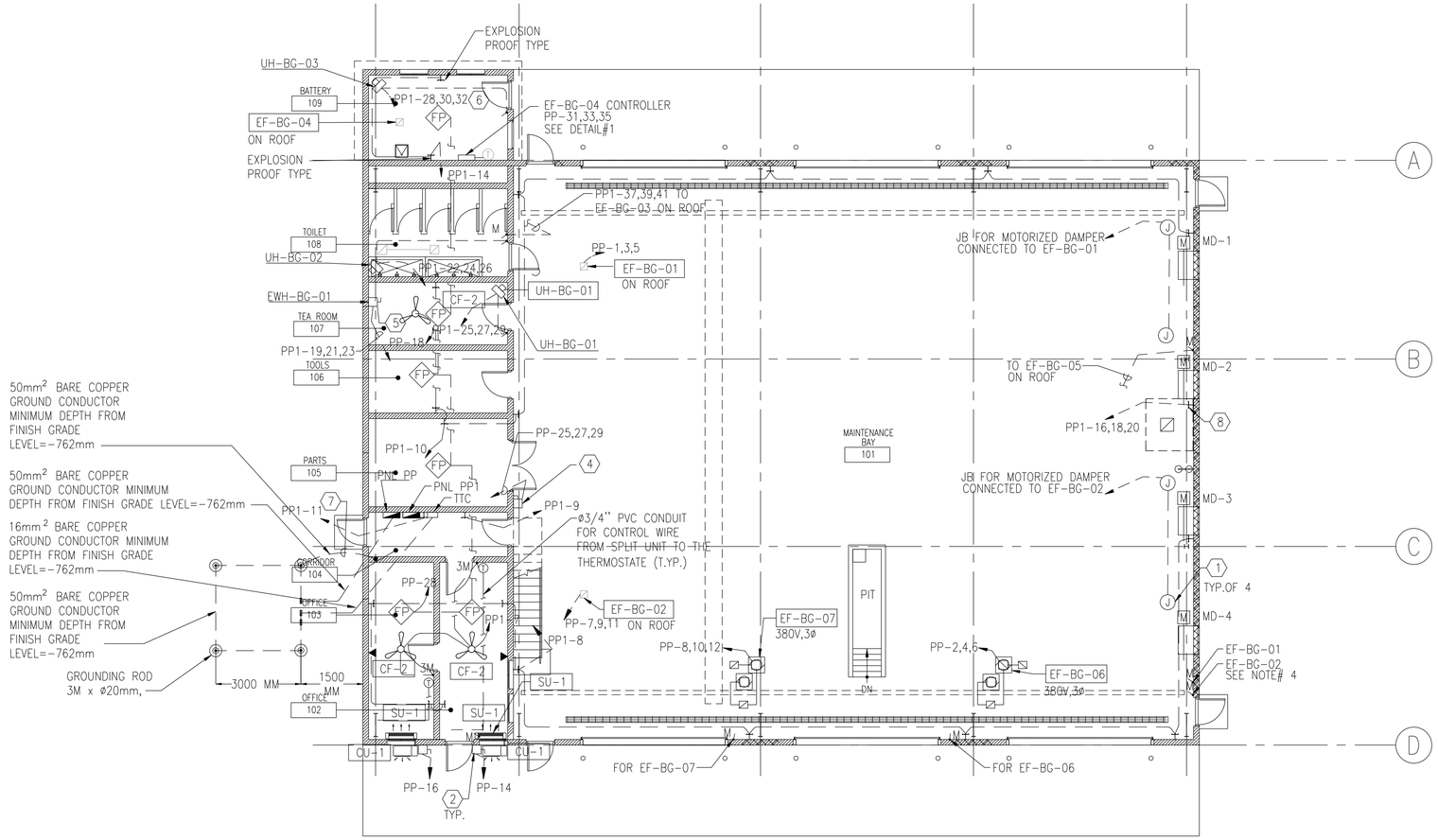

1 POWER, COMMUNICATION AND GROUNDING PLAN

BG-E-04 SCALE: 1:100

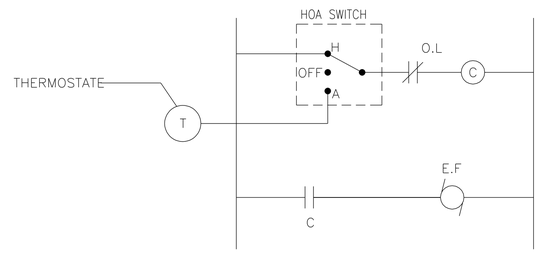

CONTROL DIAGRAM FOR EXHAUST FAN EF-04

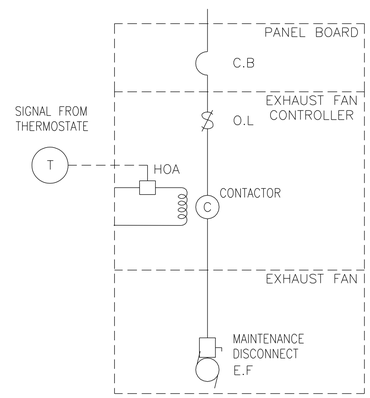

POWER CONNECTION

2 EXHAUST FAN # 4 CONTROLLER SCHEMATIC DIAGRAM DETAIL#1

BG-E-04 SCALE: N.T.S

KEY NOTES:

1. CEILING MOUNTED JUNCTION BOX FOR MOTORIZED DAMPER CONNECTION.
2. PROVIDE 240V, 20A, 2P NON FUSED DISCONNECT SWITCH IN NEMA 3R ENCLOSURE.
3. PROVIDE 380V, 3P NON FUSED DISCONNECT SWITCH 20A,380V,3P FOR EF.
4. PROVIDE 380V, 50A, 3P NON FUSED DISCONNECT SWITCH +1500mm A.F.F
5. PROVIDE 380V, 30A, 3P N.F.S.S. IN NEMA 1 ENCLOSURE.
6. ELECTRICAL INSTALLATION IN THIS AREA SHALL COMPLY WITH NEC CLASS 1, DIV 2 REQUIREMENTS.
7. CONNECT TO BUILDING STEEL COLUMN.
8. 30A, 3P, 4W WELDING RECEPTACLE +450 AFF
9. "NOT USED"

NOTES:

1. SEE SHEET CO-E-01 FOR SYMBOLS, ABBREVIATIONS AND GENERAL NOTES.
2. PROVIDE 20mm CONDUIT AND CONTROL WIRING FROM THERMOSTAT AND SPLIT UNIT SYSTEM.
3. PROVIDE FIRE ALARM PULL BOXES,CONDUITS AND WIRING FOR FUTURE SELF SMOKE DETECTOR
4. THE EXHAUST FANS #EF-BG-01 &EF-BG-02 AND RELATED TWO MOTORIZED DAMPERS PER EACH FAN SHALL BE CONTROLLED TOGETHER VIA MANUAL MOTOR STARTER

1 0 1 2 3 4 5 6 7 8 9
1:100

SYMBOL	DESCRIPTION	DATE	APR

DESIGNED BY: XXX
DATE: 06-27-07
DWN. BY: XXX
SUBMITTED BY: R. CRENWAL CHIEF, BLDG SYSTEMS
CHK BY: XXX
FILE NO.: AF0707 BG-E-04

US Army Corps of Engineers Transatlantic Programs Center

ANA REGIONAL BRIGADE
PAKTIKA, AFGHANISTAN

MAINTENANCE GARAGE (3 BAY)
CS & CSS MAINTENANCE GARAGE
POWER, COMMUNICATION AND GROUNDING PLAN

SHEET REFERENCE NUMBER:
SK
BG-E-04

$(getvar, "dwgprefix")$(getvar, "dwgname")$(edtime, O, MON DD", " YYYY - HHMMam/pm)

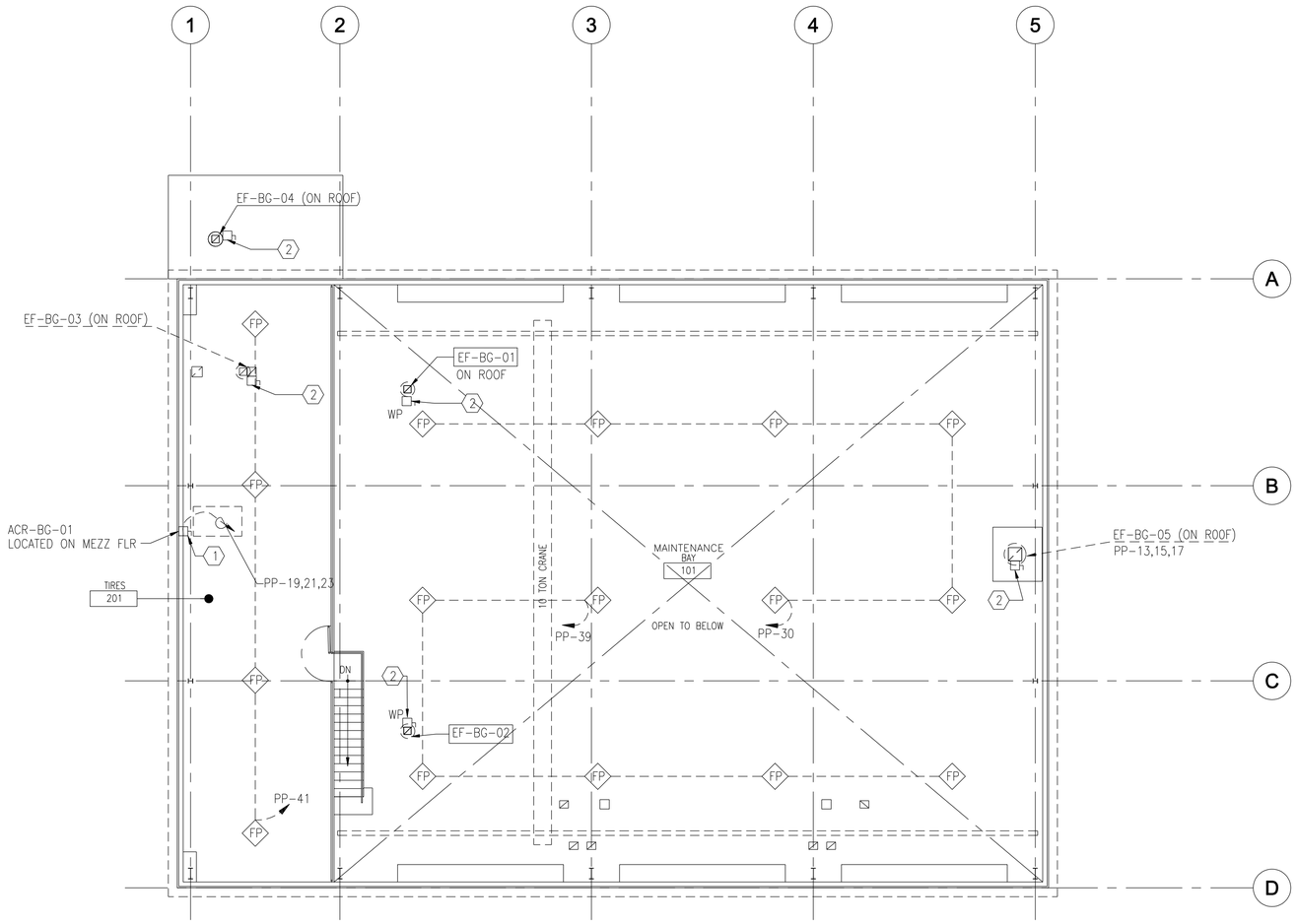

MEZZANINE POWER
1 AND COMMUNICATION PLAN
BG-E-05 SCALE: 1:100

KEY NOTES:

(1) PROVIDE 380V, 30A, 3P, N.F.D.S IN NEMA 3R ENCLOSURE.

(2) PROVIDE 380V, 20A, 3P, N.F.D.S IN NEMA 3R ENCLOSURE.

GENERAL NOTES:

1. SEE SHEET CO-E-01 FOR SYMBOLS, ABBREVIATIONS AND GENERAL NOTES.
2. PROVIDE FIRE ALARM PULL BOXES, CONDUITS AND WIRING FOR FUTURE SELF SMOKE DETECTOR

1 0 1 2 3 4 5 6 7 8 9
1:100

SYMBOL	DESCRIPTION	DATE	APR

DESIGNED BY: XXX
DATE: 06-27-07
DWN BY: XXX
SUBMITTED BY: R. CARPENTAL CHIEF, PDT BLDG SYSTEMS
CHK BY: XXX
FILE NO.: AF0707 BG-E-05

US Army Corps of Engineers Transatlantic Programs Center

ANA REGIONAL BRIGADE
PAKTIKA, AFGHANISTAN

MAINTENANCE GARAGE (3 BAY)
CS & CSS MAINTENANCE GARAGE
MEZZANINE POWER
AND COMMUNICATION PLAN

SHEET REFERENCE NUMBER:
SK
BG-E-05

$(getvar, "dwgprefix")$(getvar, "dwgname")$(edtime, 0, MON DD",", YYYY - HH:MMam/pm)

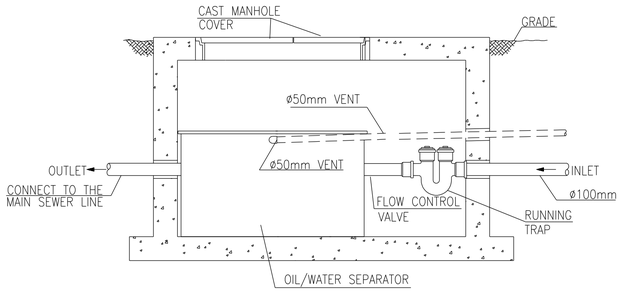

1 ELEVATION

FP-M-01 SCALE: 1:25

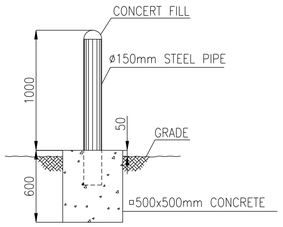

2 DETAIL - A BOLLARD DETAIL

FP-M-01 SCALE: 1:25

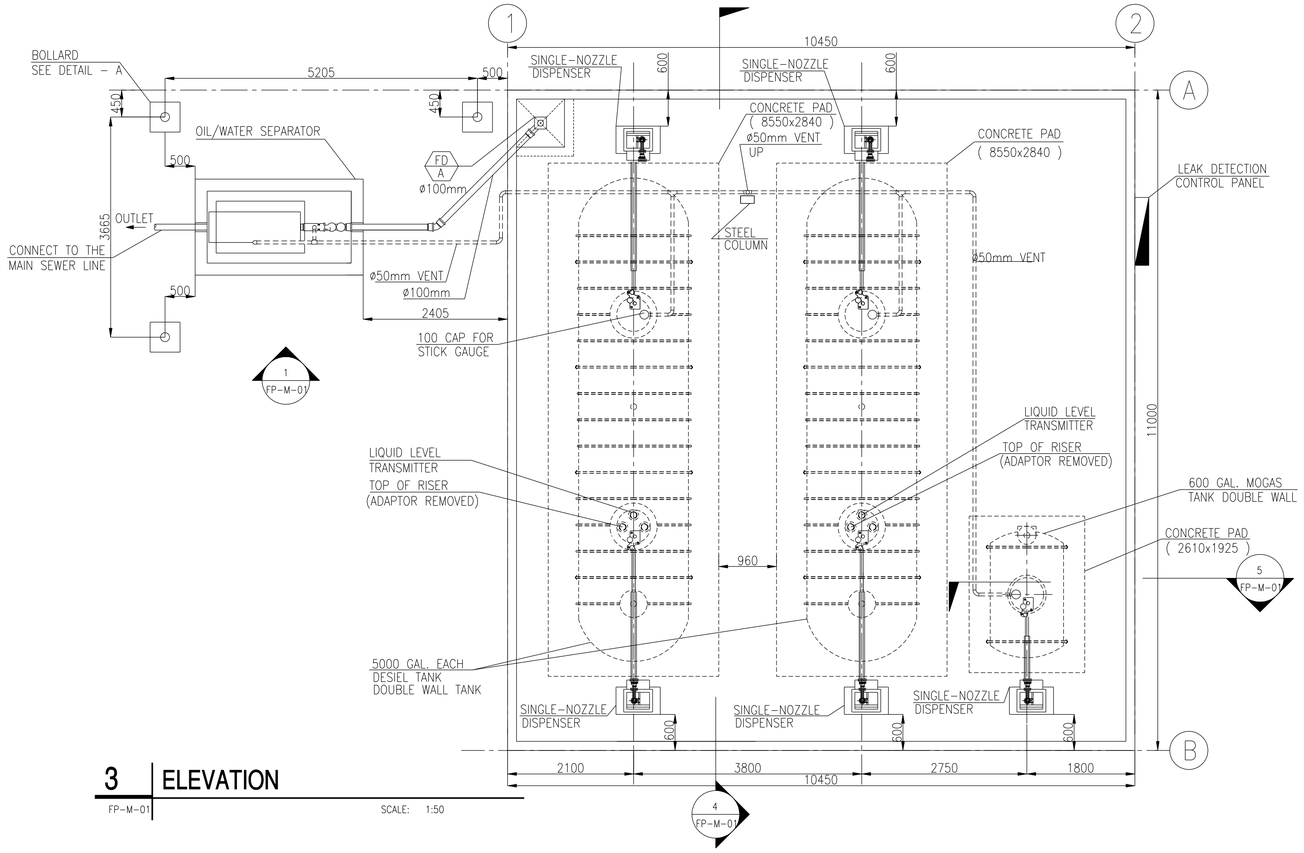

3 ELEVATION

FP-M-01 SCALE: 1:50

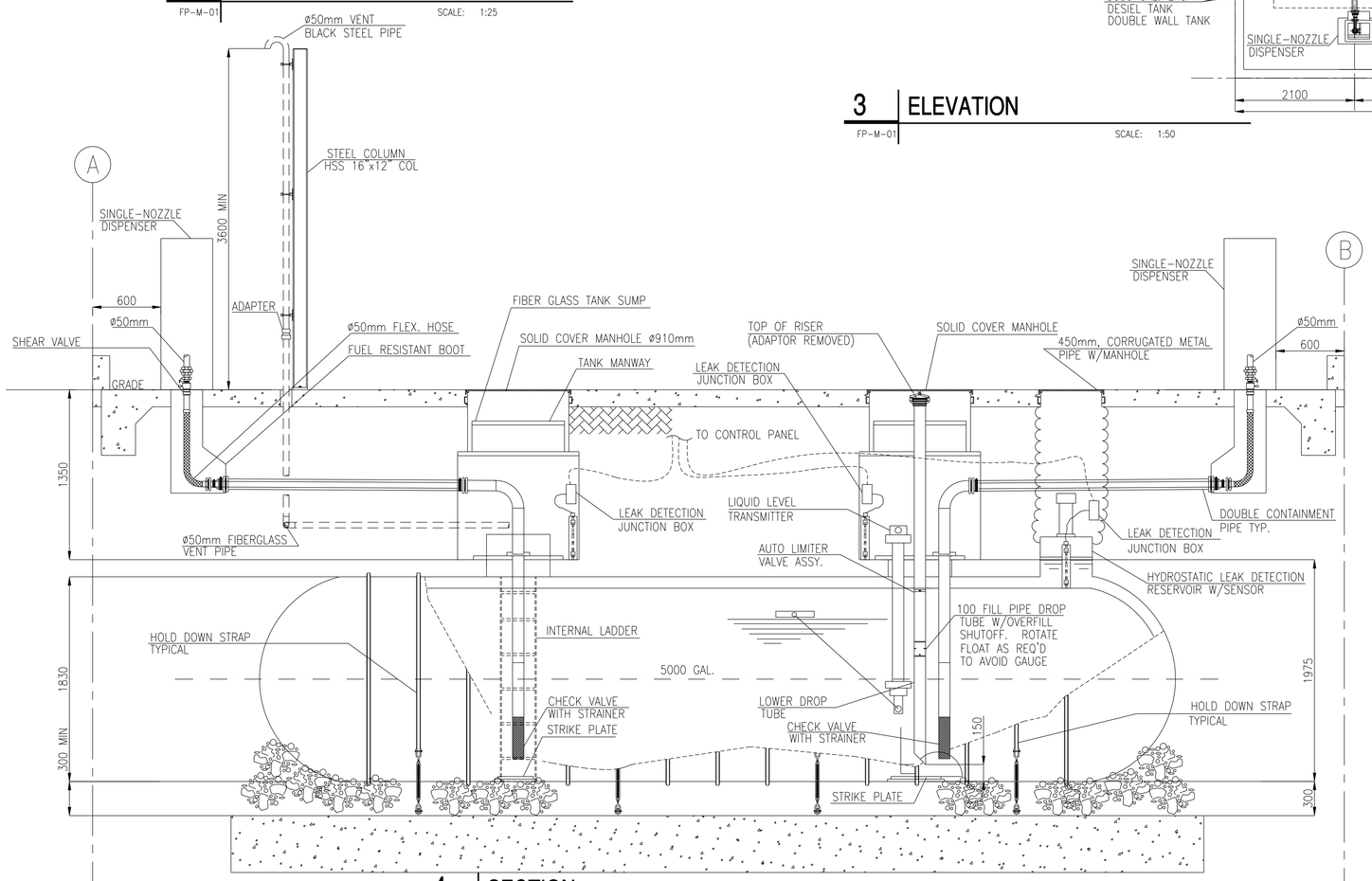

4 SECTION

FP-M-01 SCALE: 1:25

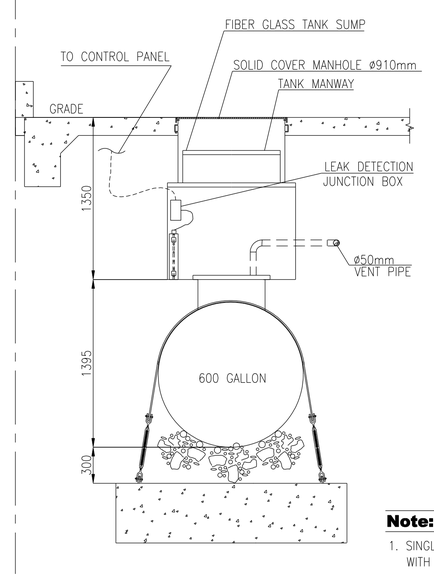

5 SECTION

FP-M-01 SCALE: 1:25

Note:

1. SINGLE DISPENSER, DISEL OR GAS, 159 LPM CAPACITY WITH FITTING, PUMP, AND ACCESSORIES.

1:50 — 1 0 1 2 3 4

1:25 — 1 .50 0 1 1.5 — DRAWING NOT TO SCALE

SYMBOL	DESCRIPTION	DATE	APR

DESIGNED BY: HANAN E. | DATE: 04-11-07 | SUBMITTED BY: R. CREWAL, CHIEF, BLDG SYSTEMS
DWN BY: HANY M. | FILE NO.: AF0707FP-M-01
CHK BY: G.TAWAB

US Army Corps of Engineers Transatlantic Programs Center

ANA REGIONAL BRIGADE
PAKTIKA, AFGHANISTAN
BRIGADE & GARRISON HQ COMPLEX
REFUELING POINT
FLOOR PLAN AND ELEVATION

SHEET REFERENCE NUMBER:
PK
FP-M-01

$(getvar, "dwgprefix")$(getvar, "dwgname")$(edtime, O, MON DD",", YYYY – HHMMam/pm)

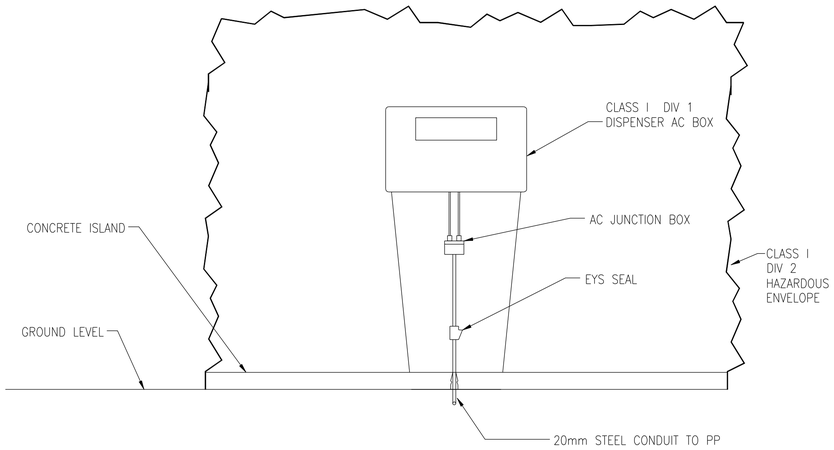

1 FUEL DISPENSER REGISTER ELEVATION

FP-E-01 SCALE: N.T.S

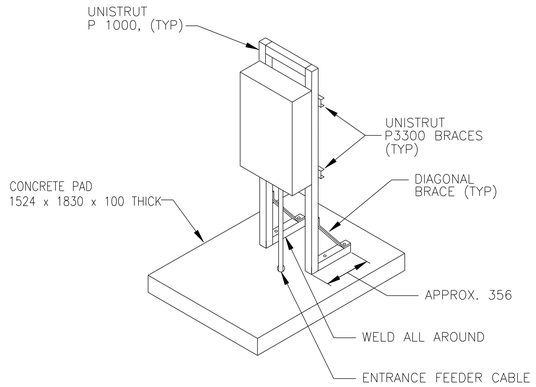

2 POWER PANEL MOUNTING DETAIL

FP-E-01 SCALE: N.T.S

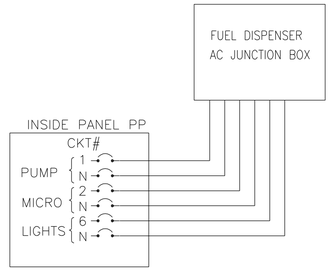

3 FUEL DISPENSER WIRING DIAGRAM

FP-E-01 SCALE: N.T.S

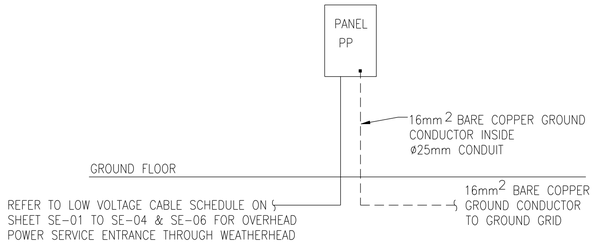

4 POWER RISER DIAGRAM

FP-E-01 SCALE: N.T.S

FUEL STORAGE PANEL PP
(BUILDING#313)

AIC: 25KA
32AT/100AF MCB
MLO
VOLTAGE 380/220V, 3PH, 5W, 50HZ

FEED TOP
MOUNTING LOCATION SURFACE , EXTERNAL NEMA 3R ENCLOSURE

DESCRIPTION	LOAD (VA) A	B	C	AMP	POLE	CKT	A	B	C	CKT	POLE	AMP	LOAD (VA) A	B	C	DESCRIPTION
DISPENSER PUMP #1	1400			20	1	1				2	1	20	1400			DISPENSER PUMP #4
DISPENSER #1 LIGHTING		100		20	1	3				4	1	20		100		DISPENSER #4 LIGHT
DISPENSER #1 CONTROL			100	20	1	5				6	1	20			100	DISPENSER #4 CONTROL
DISPENSER #2 LIGHTING	100			30	1	7				8	1	20	100			DISPENSER #5 LIGHT
DISPENSER PUMP #2		1400		20	1	9				10	1	20		1400		DISPENSER PUMP #5
DISPENSER #2 CONTROL			100	20	1	11				12	1	20			100	DISPENSER #5 CONTROL
DISPENSER #3 CONTROL	100			20	1	13				14	1	20				SPARE
DISPENSER #3 LIGHTING		100		20	1	15				16	1	20				SPARE
DISPENSER PUMP #3			1400	20	1	17				18	1	20			500	SPACE FOR LIGHTING POLE
SPARE				20	1	19				20	1	20				SPARE
SPACE					1	21				22	1	20				SPARE
SPACE					1	23				24	1	20			200	LEAK DETECTION CONTROL PANEL
SUB-TOTALS=	1600	1600	1600										1500	1500	900	= SUB-TOTALS

	V A	AMPS
TOTAL PHASE A=	3100	14.09
TOTAL PHASE B=	3100	14.09
TOTAL PHASE C=	2500	11.36
TOTAL CONNECTED LOAD	8.7	KVA
DEMAND FACTOR	100%	
DEMAND LOAD	8.7	KVA
20% FUTURE LOAD	1.74	KVA
TOTAL LOAD	10.4	KVA
TOTAL AMPERE	15.86	AMP

5 PANEL PP

FP-E-01 SCALE: N.T.S

NOTES:

1. SEE SHEET CO-E-01 AND CO-E-02 FOR SYMBOLS, ABBREVIATIONS AND GENERAL NOTES.
2. EXTERNAL AREA LIGHTING FIXTURES AND ALL RELATED WORK (WIRES,CONDUIT,..ETC) ARE NOT IN THE SCOPE OF WORK.

DRAWING NOT TO SCALE

SYMBOL	DESCRIPTION	DATE	APR

DESIGNED BY: XXX
DWN BY: XXX
CHK BY: XXX
DATE: 04-11-07
SUBMITTED BY: SYED ENAYATULLA CHIEF POL BLDG SYSTEMS
FILE NO.: AF0707FP-E-01

US Army Corps of Engineers Transatlantic Programs Center

ANA REGIONAL BRIGADE
PAKTIKA, AFGHANISTAN
BRIGADE & GARRISON HQ COMPLEX
REFUELING POINT
RISER DIAGRAM AND DETAILS

SHEET REFERENCE NUMBER:
PK
FP-E-01

$(getvar, "dwgprefix")$(getvar, "dwgname")$(edtime, 0, MON DD,"", YYYY - H:MMam/pm)

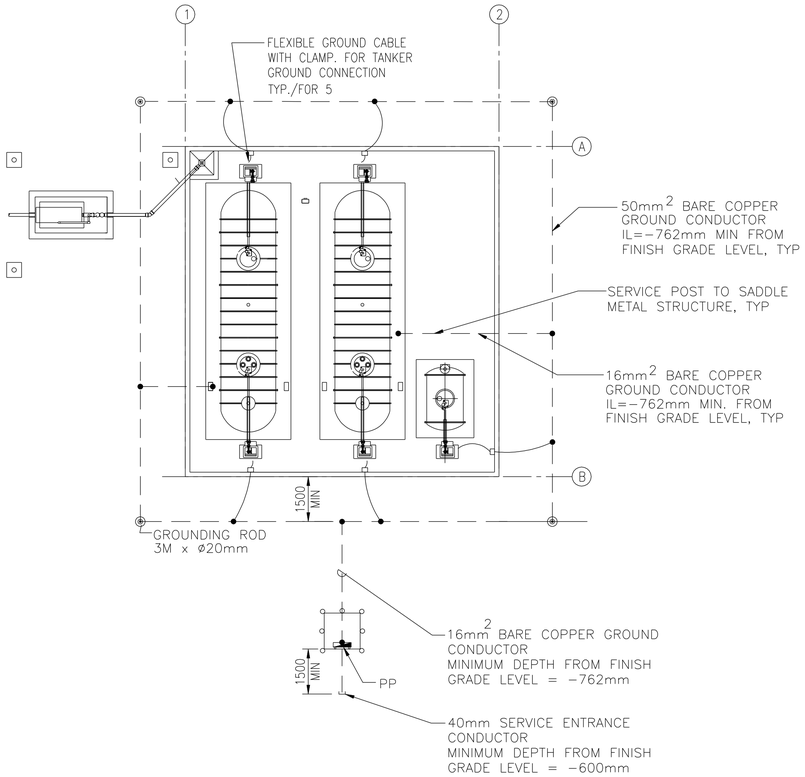

1 GROUNDING PLAN

FP-E-02 SCALE: 1:100

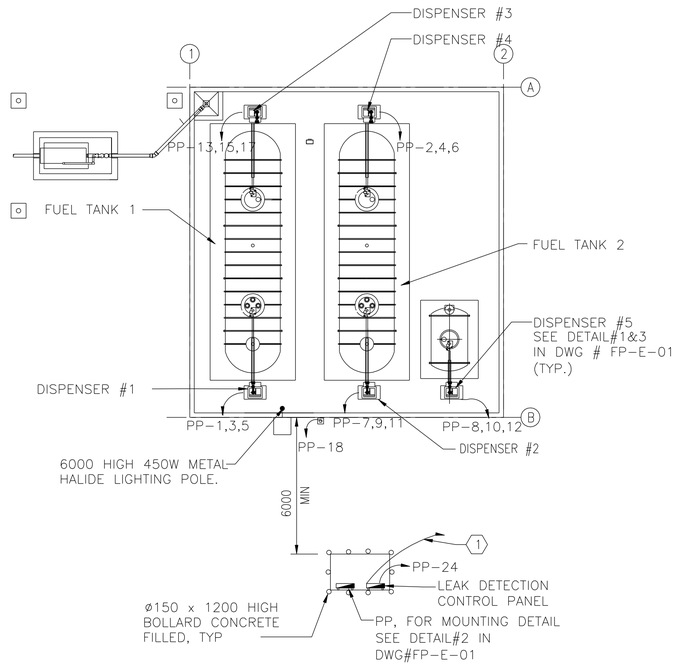

2 POWER AND LIGHTING PLAN

FP-E-02 SCALE: 1:100

KEY NOTES:

1. PROVIDE WIRING TO LEAK DETECTION AS REQUIRED BY MANUFACTURE

NOTES:

1. SEE SHEET CO-E-01 AND CO-E-02 FOR SYMBOLS, ABBREVIATIONS AND GENERAL NOTES.
2. SEE SHEETS CO-E-03 TO CO-E-05 FOR STANDARD DETAILS.

DRAWING NOT TO SCALE

SYMBOL	DESCRIPTION	DATE	APR

DESIGNED BY: XXX | DATE: 04-11-07
DWN BY: XXX | SUBMITTED BY: SYED ENAYATULLA CHIEF POL BLDG SYSTEMS
CHK BY: XXX | FILE NO.: AF0707FP-E-02

US Army Corps of Engineers Transatlantic Programs Center

ANA REGIONAL BRIGADE
PAKTIKA, AFGHANISTAN
BRIGADE & GARRISON HQ COMPLEX
REFUELING POINT
POWER, LIGHTING AND GROUNDING PLAN

SHEET REFERENCE NUMBER:
PK
FP-E-02

$(getvar, "dwgprefix")$(getvar, "dwgname")$(edtime, 0, MON DD", YYYY - HH:MMam/pm)

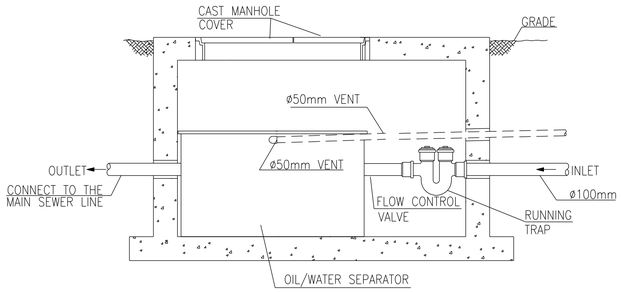

1 ELEVATION

FP-M-01 SCALE: 1:25

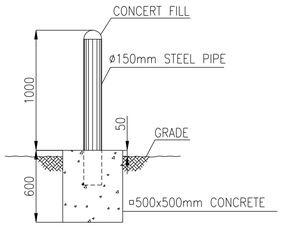

2 DETAIL - A BOLLARD DETAIL

FP-M-01 SCALE: 1:25

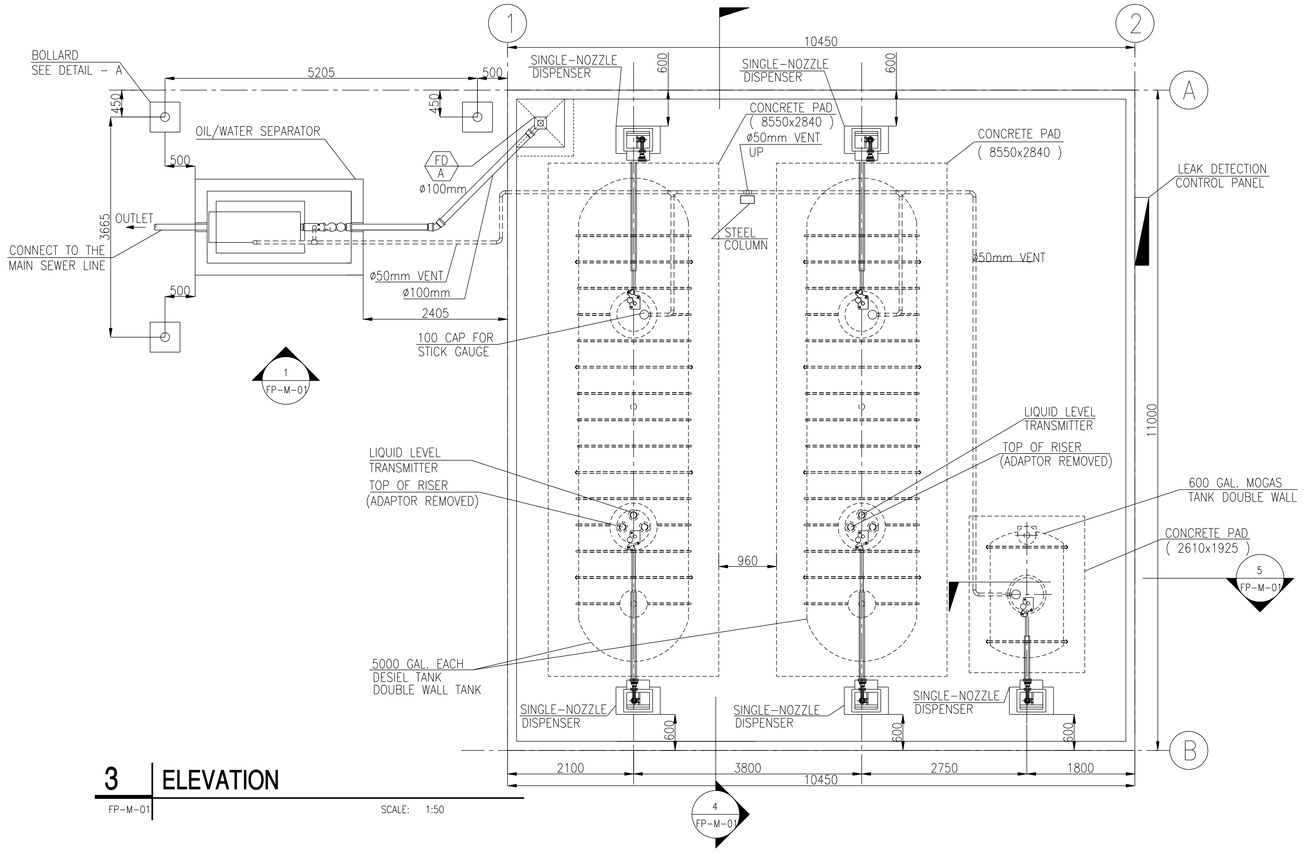

3 ELEVATION

FP-M-01 SCALE: 1:50

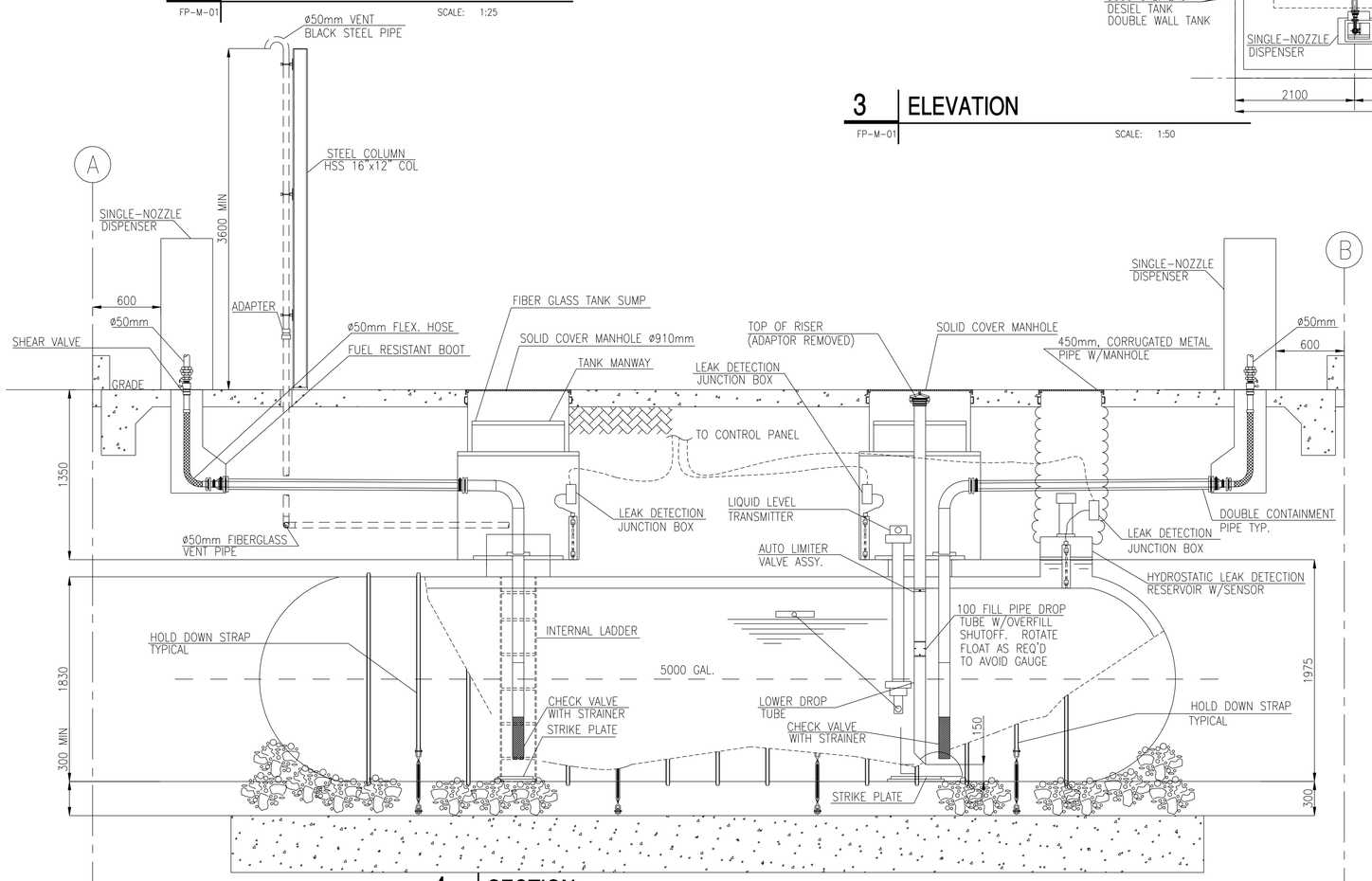

4 SECTION

FP-M-01 SCALE: 1:25

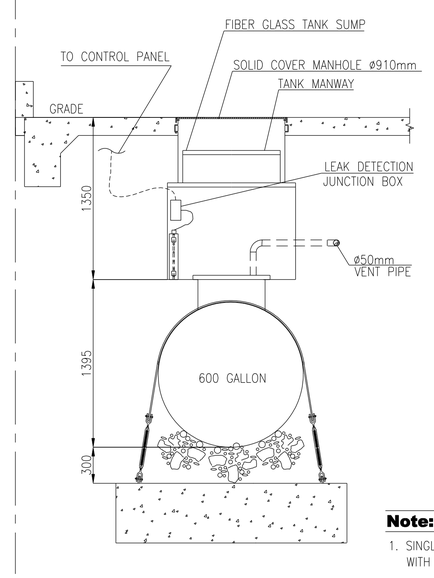

5 SECTION

FP-M-01 SCALE: 1:25

Note:

1. SINGLE DISPENSER, DISEL OR GAS, 159 LPM CAPACITY WITH FITTING, PUMP, AND ACCESSORIES.

1:50 — 1 0 1 2 3 4

1:25 — 1 .50 0 1 1.5 — DRAWING NOT TO SCALE

SYMBOL	DESCRIPTION	DATE	APR

DESIGNED BY: HANAN E. | DATE: 04-11-07 | SUBMITTED BY: R. CREWAL, CHIEF, BLDG SYSTEMS
DWN BY: HANY M. | FILE NO.: AF0707FP-M-01
CHK BY: G.TAWAB

US Army Corps of Engineers Transatlantic Programs Center

ANA REGIONAL BRIGADE
PAKTIKA, AFGHANISTAN
BRIGADE & GARRISON HQ COMPLEX
REFUELING POINT
FLOOR PLAN AND ELEVATION

SHEET REFERENCE NUMBER:
PK
FP-M-01

$(getvar, "dwgprefix")$(getvar, "dwgname")$(edtime, O, MON DD",", YYYY – HHMMam/pm)

ANA Regional Brigade

Paktika, Afghanistan

Volume 3 of 3

RD Battalion HQ Bldg. w/Toilets
V Central Receiving Warehouse
X Training Bldg.
ZA Ammo Supply Igloo
ZB Perimeter Fence
BB Community Center
DD Medical Clinic
Standard Details

US Army Corps
of Engineers
Transatlantic Programs Center

26 June 2007

DRAWING INDEX

SHT.REF. NO.	FILE NO.	REVISIONS REV. NO.	REVISIONS AM/COP NO.	TITLE
	AF0707--GI01GN			DRAWING INDEX OF INDICES
				VOLUME 1
	AF0707--GI02GN			DRAWING INDEX SHEET 1
				A DPW BUILDING
				B DETENTION FACILITY
	AF0707--GI03GN			DRAWING INDEX SHEET 2
				CA BARRACKS
				CB MWR
	AF0707--GI04GN			DRAWING INDEX SHEET 3
				CC STORAGE BUILDING
				CE DEFAC 2
				DA BARRACKS
	AF0707--GI05GN			DRAWING INDEX SHEET 4
				DA BARRACKS CONTINUED
				DB MWR
				DC DEFAC 3
	AF0707--GI06GN			DRAWING INDEX SHEET 5
				E FIRE STATION
				F RANGE
				FA OBSERVATION TOWER
				FB AMMUNITION BREAKDOWN BUILDING
				FC BLEACHER ENCLOSURE
				VOLUME 2
	AF0707--GI07GN			DRAWING INDEX SHEET 6
				K GUARD TOWER
				L GUARD HOUSE
				M RECEPTION BUILDING
				N DFAC
				O POWER PLANT
	AF0707--GI08GN			DRAWING INDEX SHEET 7 NOT USED
	AF0707--GI09GN			DRAWING INDEX SHEET 8 NOT USED
	AF0707--GI10GN			DRAWING INDEX SHEET 9
				PE BRIGADE HQ BUILDING
				PF GARRISON HQ BUILDING
				PG ARMS STORAGE BUILDING
				PI POL STORAGE BUILDING
	AF0707--GI11GN			DRAWING INDEX SHEET 10
				PJ MAINTENANCE GARAGE 9 BAY
				SK MAINTENANCE GARAGE 3 BAY
				PK REFUELER POINT
	AF0707--GI12GN			DRAWING INDEX SHEET 11 NOT USED

SHT.REF. NO.	FILE NO.	REVISIONS REV. NO.	REVISIONS AM/COP NO.	TITLE
				VOLUME 3
	AF0707--GI13GN			DRAWING INDEX SHEET 12
				RD BATTALION HQ BUILDING
				V CENTRAL RECEIVING WAREHOUSE
	AF0707--GI14GN			DRAWING INDEX SHEET 13
				X TRAINING BUILDING
				ZA AMMO IGLOO
				ZB PERIMETER FENCE
				BB COMMUNITY CENTER
				DD MEDICAL CLINIC
	AF0707--GI15GN			DRAWING INDEX SHEET 14
				CO STANDARD DETAILS

SYMBOL | DESCRIPTION | DATE | APR

RECOMMENDED BY
TECHNICAL DIRECTOR DATE:
APPROVED BY
DDEPM DATE:
CONSTRUCTIBILITY REVIEW
CHIEF, QUALITY ASSUR DIV DATE:
APPROVED FUNCTIONAL ADEQUACY
PROJECT MANAGER DATE:

US Army Corps of Engineers
Transatlantic Programs Center

ANA REGIONAL BRIGADE
PAKTIKA, AFGHANISTAN
DRAWING INDEX OF INDICES

DRAWING INDEX

SHT.REF. NO.	FILE NO.	REVISIONS REV. NO.	REVISIONS AM/COP NO.	TITLE
	AF0707--GI13GN			DRAWING INDEX SHEET 12
				RD BATTALION HQ BUILDING
RD HQ-A-01	AF0707HQ-A-01			FLOOR AND ENLARGED PLANS AND INTERIOR ELEVATIONS
RD HQ-A-02	AF0707HQ-A-02			ROOF AND REFLECTED CEILING PLANS
RD HQ-A-03	AF0707HQ-A-03			EXTERIOR ELEVATIONS AND BUILDING ELEVATIONS
RD HQ-S-01	AF0707HQ-S-01			FOUNDATION AND ROOF FRAMING PLAN
RD HQ-M-01	AF0707HQ-M-01			MECHANICAL FLOOR PLAN AND SCHEDULES
RD HQ-P-01	AF0707HQ-P-01			PLUMBING FLOOR PLAN
RD HQ-P-02	AF0707HQ-P-02			DRAINAGE CW & HW PIPING PLANS AND RISER DIAGRAMS
RD HQ-E-01	AF0707HQ-E-01			PANEL SCHEDULES AND RISER DIAGRAM
RD HQ-E-02	AF0707HQ-E-02			GROUNDING AND LIGHTING PLANS
RD HQ-E-03	AF0707HQ-E-03			POWER AND COMMUNICATION PLANS

SHT.REF. NO.	FILE NO.	REVISIONS REV. NO.	REVISIONS AM/COP NO.	TITLE
				V CENTRAL RECEIVING WAREHOUSE
V CR-A-01	AF0707CR-A-01			FLOOR PLAN
V CR-A-02	AF0707CR-A-02			REFLECTED CEILING PLANS
V CR-A-03	AF0707CR-A-03			ROOF PLAN
V CR-A-04	AF0707CR-A-04			EXTERIOR ELEVATIONS
V CR-A-05	AF0707CR-A-05			BUILDING SECTIONS
V CR-S-01	AF0707CR-S-01			FOUNDATION PLAN
V CR-M-01	AF0707CR-M-01			MECHANICAL FLOOR PLAN AND SCHEDULES
V CR-E-01	AF0707CR-E-01			PANEL SCHEDULES AND RISER DIAGRAM
V CR-E-02	AF0707CR-E-02			LIGHTING PLANS
V CR-E-03	AF0707CR-E-03			POWER AND COMMUNICATION AND GRUNDING PLANS

SYMBOL	DESCRIPTION	DATE	APR

US Army Corps of Engineers
Transatlantic Programs Center

ANA REGIONAL BRIGADE
PAKTIKA, AFGHANISTAN

DRAWING INDEX SHEET 12

DRAWING INDEX

SHT.REF. NO.	FILE NO.	REVISIONS REV. NO.	REVISIONS AM/COP NO.	TITLE
	AF0707--GI14GN			DRAWING INDEX SHEET 13
				X TRAINING BUILDING
X TB-A-01	AF0707TB-A-01			FLOOR PLAN
X TB-A-02	AF0707TB-A-02			REFLECTED CEILING PLANS
X TB-A-03	AF0707TB-A-03			ROOF PLAN
X TB-A-04	AF0707TB-A-04			EXTERIOR ELEVATIONS
X TB-A-05	AF0707TB-A-05			BUILDING SECTIONS
X TB-A-06	AF0707TB-A-06			TOILET FLOOR PLAN & ELEVATIONS
X TB-S-01	AF0707TB-S-01			FOUNDATION PLAN
X TB-M-01	AF0707TB-M-01			MECHANICAL FLOOR PLAN
X TB-M-02	AF0707TB-M-02			SCHEDULES
X TB-M-03	AF0707TB-M-03			CONTROL DIAGRAMS
X TB-P-01	AF0707TB-P-01			PLUMBING FLOOR PLAN
X TB-P-02	AF0707TB-P-02			COLD & HOT WATER PIPING PLAN
X TB-P-03	AF0707TB-P-03			DRAINAGE PIPING PLAN
X TB-E-01	AF0707TB-E-01			PANEL SCHEDULES AND RISER DIAGRAM
X TB-E-02	AF0707TB-E-02			NOT USED
X TB-E-03	AF0707TB-E-03			GROUNDING PLAN
X TB-E-04	AF0707TB-E-04			LIGHTING PLAN
X TB-E-05	AF0707TB-E-05			POWER PLAN
X TB-E-06	AF0707TB-E-06			COMMUNICATION PLAN
				ZA AMMO IGLOO
ZA-S-01	AF0707ZA-SB01PN			FOUNDATION PLAN AND SECTION
ZA-S-02	AF0707ZA-SB02EL			BUILDING ELEVATION
ZA-S-03	AF0707ZA-SB03SE			SECTIONS & DETAILS
ZA-S-04	AF0707ZA-SB04DT			DETAILS
ZA-S-05	AF0707ZA-SB05SE			DETAILS
ZA-S-06	AF0707ZA-SB06SE			DETAILS
ZA-E-01	AF0707ZA-EP01PN			ELECTRICAL PLAN
ZA-E-01	AF0707ZA-EP02DT			ELECTRICAL DETAILS
				ZB PERIMETER FENCE
SW-C905	AF0707SW-C905			FENCE DETAILS

SHT.REF. NO.	FILE NO.	REVISIONS REV. NO.	REVISIONS AM/COP NO.	TITLE
				BB COMMUNITY CENTER
BB A-01	AF0707BB-AR01PN			FLOOR PLAN
BB A-02	AF0707BB-AR02EL			ELEVATIONS
BB A-03	AF0707BB-AR03SE			SECTION, ROOF PLAN DETAILS
BB S-01	AF0707BB-SB01PN			FOUNDATION AND FLOOR PLAN
BB M-01	AF0707BB-MH01PN			HVAC PLAN
BB M-02	AF0707BB-MH02SC			HVAC SCHEDULES
BB M-03	AF0707BB-MH03DI			TEMPERATURE CONTROL DIAGRAM
BB P-01	AF0707BB-MP01PN			PLUMBING LAYOUT
BB P-02	AF0707BB-MP02LS			LARGE SCALE PLUMBING PLANS
BB P-03	AF0707BB-MP03DI			PLUMBING RISER DIAGRAMS
BB E-01	AF0707BB-EL01PN			LIGHTING LAYOUT
BB E-02	AF0707BB-EP02PN			POWER PLAN
BB E-03	AF0707BB-EP03SC			PANEL SCHEDULE
BB TC-1	AF0707BB-TC01PN			COMMUNICATIONS PLAN
BB TC-2	AF0707BB-TC02DT			COMMUNICATIONS DETAILS
BB TC-3	AF0707BB-TC03DT			COMMUNICATIONS DETAILS
BB TC-4	AF0707BB-TC04DT			COMMUNICATIONS DETAILS
				DD MEDICAL CLINIC
DD CL-A-01	AF0707CL-A-01			FLOOR PLAN
DD CL-A-01A	AF0707CL-A-01A			AMBULANCE SHELTER FLOOR PLAN, SECTION, ELEVATION
DD CL-A-02	AF0707CL-A-02			REFLECTED CEILING PLANS
DD CL-A-03	AF0707CL-A-03			ROOF PLAN
DD CL-A-04	AF0707CL-A-04			EXTERIOR ELEVATIONS
DD CL-A-05	AF0707CL-A-05			EXTERIOR ELEVATIONS, BUILDING SECTIONS
DD CL-A-06	AF0707CL-A-06			ENLARGED PLANS
DD CL-A-07	AF0707CL-A-07			INTERIOR ELEVATIONS
DD CL-A-08	AF0707CL-A-08			INTERIOR CASEWORK DETAILS
DD CL-S-01	AF0707CL-S-01			FOUNDATION PLAN
DD CL-S-02	AF0707CL-S-02			ROOF FRAMING PLAN
DD CL-M-01	AF0707CL-M-01			MECHANICAL FLOOR PLAN
DD CL-M-02	AF0707CL-M-02			SCHEDULES
DD CL-M-03	AF0707CL-M-03			MECHANICAL DETAILS
DD CL-P-01	AF0707CL-P-01			PLUMBING FLOOR PLAN
DD CL-P-02	AF0707CL-P-02			DRAINAGE PIPING PLAN
DD CL-P-03	AF0707CL-P-03			CW AND HW PIPING PLAN
DD CL-P-04	AF0707CL-P-04			PLUMBING RISER DIAGRAMS
DD CL-P-05	AF0707CL-P-05			ENLARGED DRAINAGE PIPING PLAN & RISER DIAGRAM
DD CL-P-06	AF0707CL-P-06			ENLARGED CW & HW PIPING PLAN & RSIER DIAGRAM
DD CL-P-07	AF0707CL-P-07			ENLARGED DRAINAGE PIPING PLAN
DD CL-P-08	AF0707CL-P-08			ENLARGED CW & HW PIPING PLAN BLDG 2
DD CL-P-09	AF0707CL-P-09			DRAINAGE RISER DIAGRAM
DD CL-P-10	AF0707CL-P-10			CW & HW RISER DIAGRAM
DD CL-E-01	AF0707CL-E-01			PANEL SCHEDULES AND RISER DIAGRAM
DD CL-E-02	AF0707CL-E-02			PANEL SCHEUDLES
DD CL-E-03	AF0707CL-E-03			PANEL SCHEDULES
DD CL-E-04	AF0707CL-E-04			GROUNDING PLAN
DD CL-E-05	AF0707CL-E-05			LIGHTING PLANS
DD CL-E-06	AF0707CL-E-06			POWER PLAN
DD CL-E-07	AF0707CL-E-07			COMMUNICATION PLAN

SYMBOL	DESCRIPTION	DATE	APR

US Army Corps of Engineers
Transatlantic Programs Center

ANA REGIONAL BRIGADE
PAKTIKA, AFGHANISTAN

DRAWING INDEX SHEET 13

DRAWING INDEX

SHT.REF. NO.	FILE NO.	REVISIONS REV. NO.	REVISIONS AM/COP NO.	TITLE
	AF0707--GI15GN			DRAWING INDEX SHEET 14
				CO STANDARD DETAILS
CO-A-01	AF0707CO-A-01			ARCH. ABBREVIATIONS LEGENDS AND SYMBOLS
CO-A-02	AF0707CO-A-02			DETAILS 1 OF 3
CO-A-03	AF0707CO-A-03			DETAILS 2 OF 3
CO-A-04	AF0707CO-A-04			DETAILS 3 OF 3
CO-A-05	AF0707CO-A-05			OPENING SCHEDULES AND TYPES 1 OF 2
CO-A-06	AF0707CO-A-06			OPENING SCHEDULES AND TYPES 2 OF 2
CO-S-01	AF0707CO-S-01			STRUCTURAL STANDARD DETAILS
CO-S-02	AF0707CO-S-02			TYPICAL FOUNDATION AND MASONRY WALL DETAILS
CO-S-03	AF0707CO-S-03			TYPICAL ROOF FRAMING DETAILS
CO-S-04	AF0707CO-S-04			FOUNDATION DETAILS FOR METAL BUILDING SYSTEMS
CO-S-05	AF0707CO-S-05			FOUNDATION DETAILS FOR METAL BUILDING SYSTEMS
CO-S-06	AF0707CO-S-06			MISCELLANEOUS SECTIONS AND DETAILS
CO-S-07	AF0707CO-S-07			TYPICAL ROOF FRAMING DETAILS
CO-S-08	AF0707CO-S-08			MISCELLANEOUS SECTIONS AND DETAILS
CO-S-09	AF0707CO-S-09			BEAM, SLAB AND COLUMN DETAIL
CO-S-10	AF0707CO-S-10			BEAM AND COLUMN SECTIONS
CO-S-11	AF0707CO-S-11			WOOD ROOF STRUCTURE
CO-M-01	AF0707CO-M-01			STANDARD MECHANICAL DETAILS
CO-M-02	AF0707CO-M-02			STANDARD MECHANICAL DETAILS
CO-M-03	AF0707CO-M-03			STANDARD MECHANICAL DETAILS
CO-M-04	AF0707CO-M-04			STANDARD MECHANICAL DETAILS
CO-M-05	AF0707CO-M-05			CONTROL DIAGRAM
CO-M-06	AF0707CO-M-06			LEGEND AND ABBREVIATIONS
CO-M-07	AF0707CO-M-07			STANDARD DETAILS
SM-1	AF0707S-MN01SC			MECHANICAL LEGEND AND NOTES
CO-P-01	AF0707CO-P-01			STANDARD PLUMBING LEGEND AND SCHEDULES
CO-P-02	AF0707CO-P-02			STANDARD PLUMBING DETAILS
CO-P-03	AF0707CO-P-03			POWER PLANT PLUMBING PLAN SECTION AND DETAILS
CO-P-04	AF0707CO-P-04			POWER PLANT OIL WATER SEPARATOR PLAN SECTION. DETAIL
CO-P-05	AF0707CO-P-05			WASTE OIL STORAGE TANK PLAN, SECTION AND DETAIL
CO-P-06	AF0707CO-P-06			POWER PLANT PUMPS, DETAILS
CO-P-07	AF0707CO-P-07			STANDARD PLUMBING LEGEND CHARTS AND NOTES
CO-E-01	AF0707CO-E-01			ELECTRICAL GENERAL LEGEND NOTES ABBREVIATIONS AND SCHEDULES
CO-E-02	AF0707CO-E-02			ELECTRICAL BRANCH CIRCUIT AND LIGHTING FIXTURE SCHEDULE
CO-E-03	AF0707CO-E-03			LIGHTING DETAILS
CO-E-04	AF0707CO-E-04			ELECTRICAL GENERAL POWER AND GROUNDING DETAILS
CO-E-05	AF0707CO-E-05			ELECTRICAL GENERAL LOW CURRENT DETAILS

SYMBOL	DESCRIPTION	DATE	APR

US Army Corps of Engineers
Transatlantic Programs Center

ANA REGIONAL BRIGADE
PAKTIKA, AFGHANISTAN

DRAWING INDEX SHEET 14

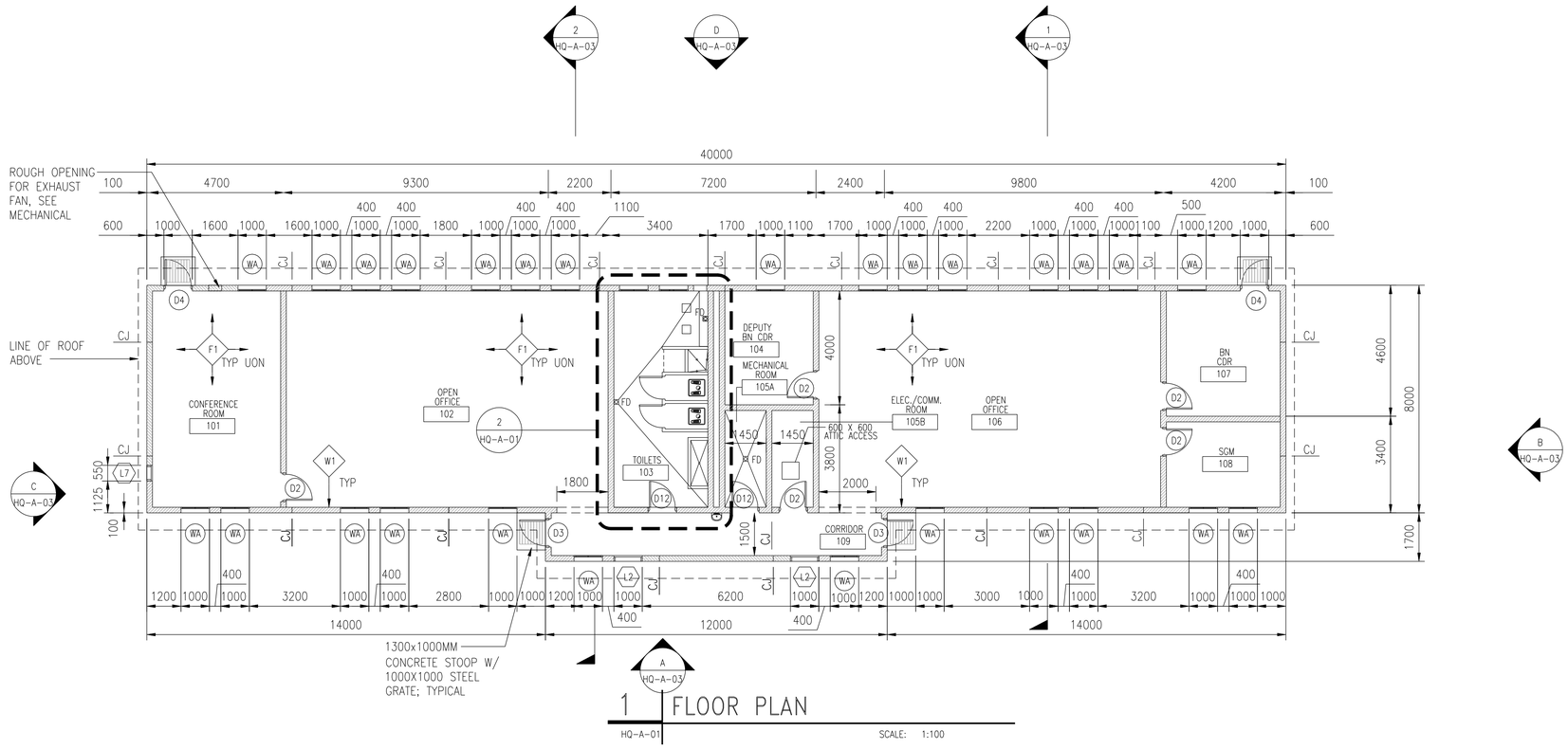

1 FLOOR PLAN

HQ-A-01 SCALE: 1:100

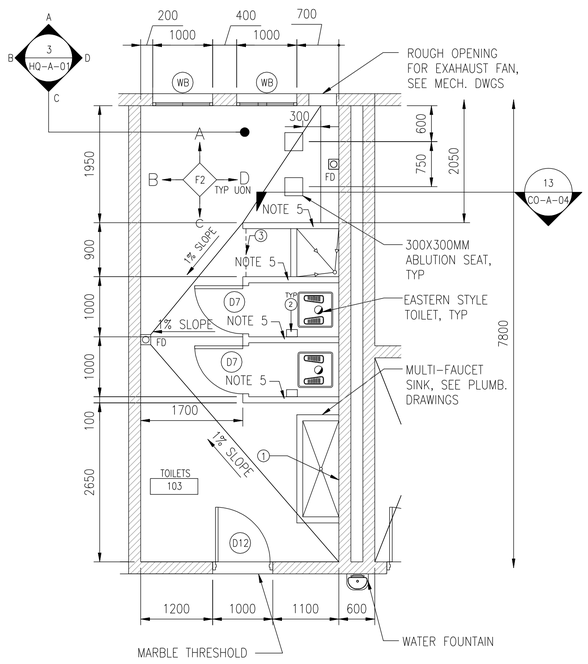

2 ENLARGED TOILETS PLAN

HQ-A-01 SCALE: 1:50

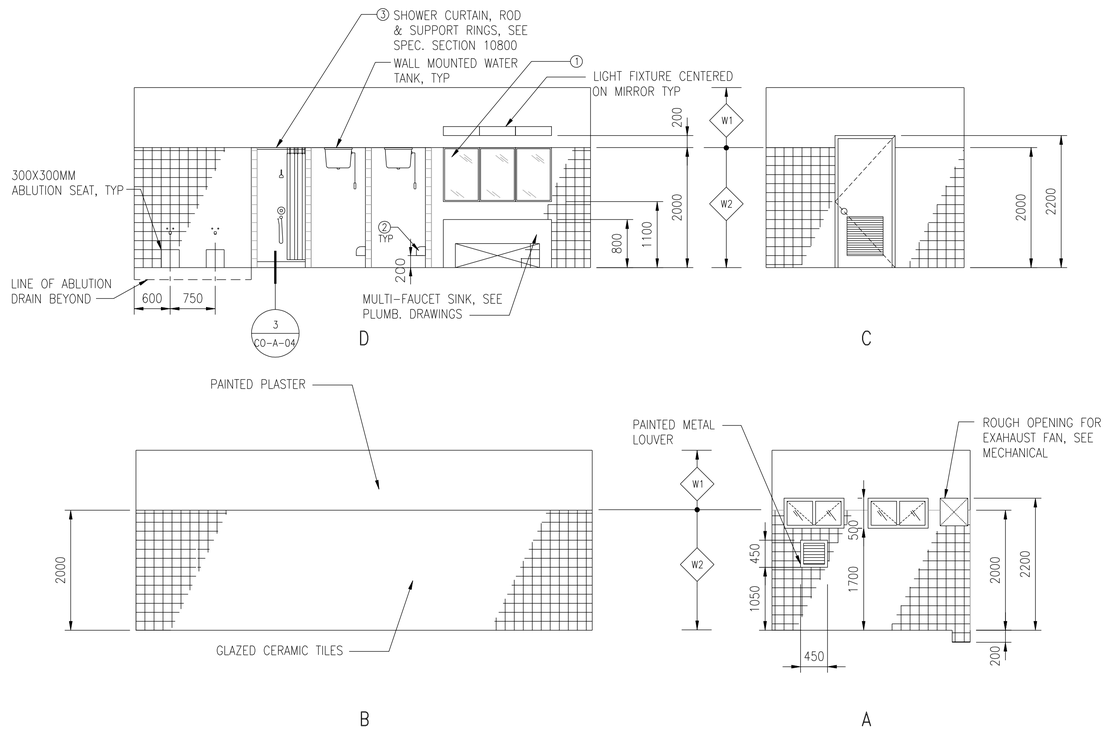

3 TOILETS ELEVATION

HQ-A-01 SCALE: 1:50

FLOOR

F1	SEALED CONCRETE
F2	300MMX300MM TERRAZZO TILE
F3	CERAMIC TILE

WALL

W1	WHITE PAINTED PLASTER
W2	150MMX150MM GLAZED CERAMIC TILES UP TO 2000MM AFF

CEILING

C1	GYPSUM BOARD – PAINTED
C2	EXPOSED STRUCTURE – PAINTED
C3	MOISTURE RESISTANT GYPSUM BOARD – PAINTED

FINISHING SCHEDULE

Room No.	Usage	Floor	Wall	Ceiling
101	CONFERENCE ROOM	F2	W1	C1
102	OPEN OFFICE	F2	W1	C1
103	TOILETS	F3	W1,W2	C3
104	DEPUTY BN CDR	F2	W1	C1
105A	MECH ROOM	F1	W1	C2
105B	ELEC./ COMM.	F1	W1	C2
106	OPEN OFFICE	F2	W1	C1
107	BN CDR	F2	W1	C1
108	SGM	F2	W1	C1
109	COORIDOR	F2	W1	C1

WALL SYMBOLS:

CMU WALL

CMU LOW HEIGHT WALL +/– 2000 MM WITH CERAMIC TILE FINISH

CJ CMU CONTROL JOINT

TOILET ACCESSORY SCHEDULE

NO.	DESCRIPTION
1	MIRROR, GLASS
2	STAINLESS STEEL TOILET PAPER HOLDER
3	SHOWER CURTAIN & ROD

NOTES:

1– ALL WALLS ARE 200 MM CMU UNLESS NOTED OTHERWISE.

2– ALL INTERIOR WALLS TERMINATE AT CEILING UNLESS NOTED OTHERWISE. REF. STRUCT. DWGS.

3– ALL DIMENSIONS ARE TO FACE OF CMU UNLESS NOTED OTHERWISE.

4– ALL VERTICAL DIMENSIONS & LEVELS ARE FROM GROUND FLOOR FINISHED SLAB. THIS ELEVATION IS +0000.

5– ALL WALLS REFERRING TO NOTE 5 AND PARTITIONS BETWEEN TOILET/SHOWERS STALLS SHALL BE 2000MM HEIGHT PARTIAL WALLS (TYP

6– SEE DRAWING CO–A–05 & CO–A–06 FOR OPENING SCHEDULES & TYPES.

7– SEE DRAWING CO–A–02, CO–A–03 & CO–A–04 FOR STANDARD DETAILS.

8– SEE STRUCTURAL DRAWINGS FOR LOCATION OF BUILDING CONTROL, EXPANSION AND SEISMIC JOINTS.

9– TOTAL AREA OF BUILDING IS 340 M2.

1:50 1 0 1 2 3 4 / 1 0 1 2 3 4 5 6 7 8 9

1:100

NOTE:

ORIENT BUILDING ON SITE SUCH THAT TOILETS ARE ON A NORTH/SOUTH ACCESS.

SYMBOL	DESCRIPTION	DATE	APR

DESIGNED BY: YSK
DWN BY: JSG
CHK BY: PLD
DATE: 06-27-07
SUBMITTED BY: PHILIP J. PANELLO CHIEF, PROJECTS DEV
FILE NO.: AF0707 RD-HQ-A-01

US Army Corps of Engineers Transatlantic Programs Center

ANA REGIONAL BRIGADE
PAKTIKA, AFGHANISTAN

BATTALION HQ BUILDING
FLOOR AND ENLARGED PLANS AND INTERIOR ELEVATIONS

SHEET REFERENCE NUMBER:
RD
HQ–A–01

$(getvar, "dwgprefix")$(getvar, "dwgname")$(edtime, O, MON DD"," YYYY – HHMMam/pm)

NOTES:

1- SEE SHEET HQ-A-01 FOR FINISH SCHEDULE.

2- SEE SHEET CO-E-01 FOR LIGHTING LEGEND.

3- SEE SHEET HQ-E-02 FOR EXIT SIGN LOCATIONS.

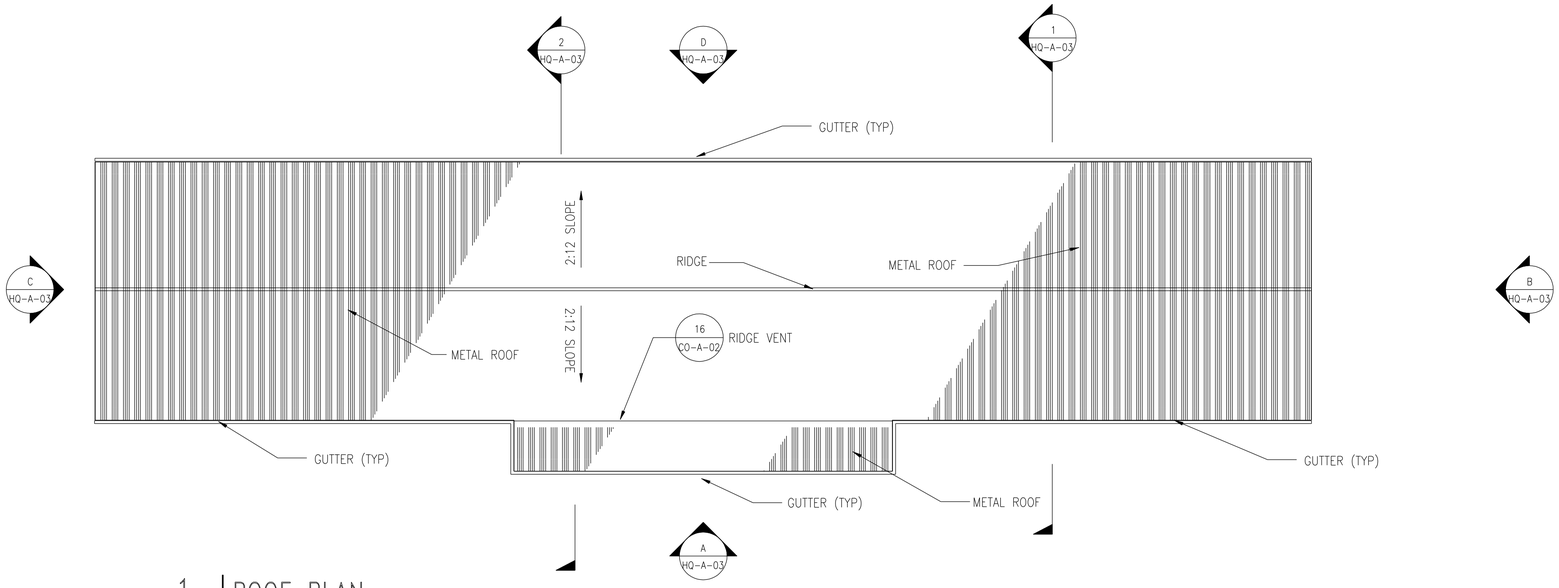

1 ROOF PLAN

HQ-A-02 SCALE: 1:100

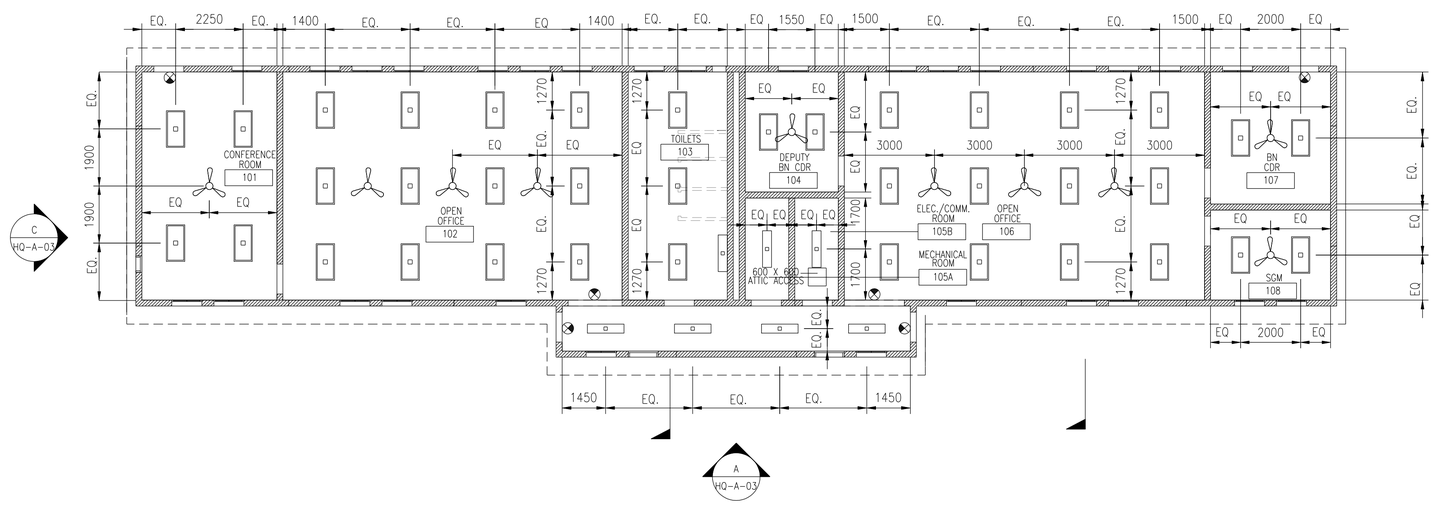

2 REFLECTED CEILING PLAN

HQ-A-02 SCALE: 1:100

1 0 1 2 3 4 5 6 7 8 9
1:100

SYMBOL	DESCRIPTION	DATE	APR

DESIGNED BY: YSK
DWN BY: JSG
CHK BY: PLD
DATE: 06-27-07
SUBMITTED BY: CHIEF, PROJ. DEV. DIV.
FILE NO.: AF0707RD-HQ-A-02

US Army Corps of Engineers
Transatlantic Programs Center

ANA REGIONAL BRIGADE
PAKTIKA, AFGHANISTAN

BATTALION HQ BUILDING
ROOF AND REFLECTED CEILING PLANS

SHEET REFERENCE NUMBER:
RD
HQ-A-02

$(getvar, "dwgprefix")$(getvar, "dwgname")$(edtime, O, MON DD"," YYYY - H:MMam/pm)

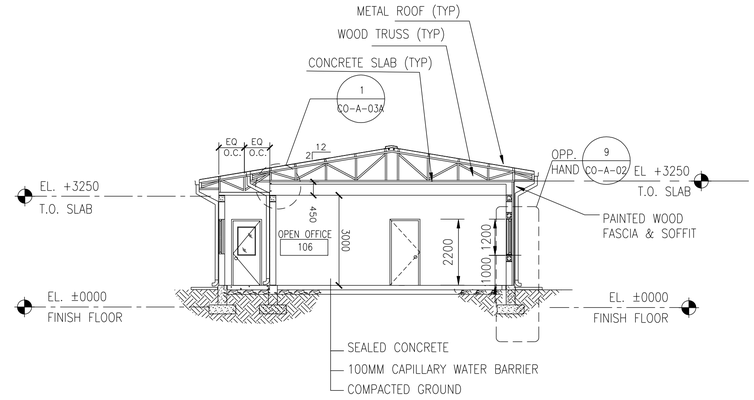

1 CROSS SECTION

HQ-A-03 SCALE: 1:100

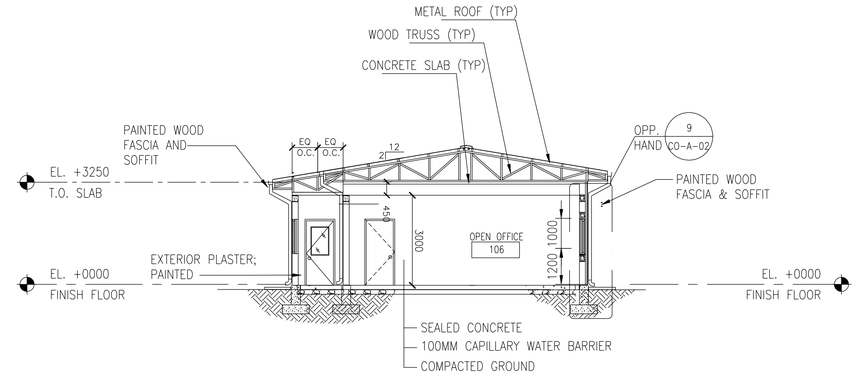

2 CROSS SECTION

HQ-A-03 SCALE: 1:100

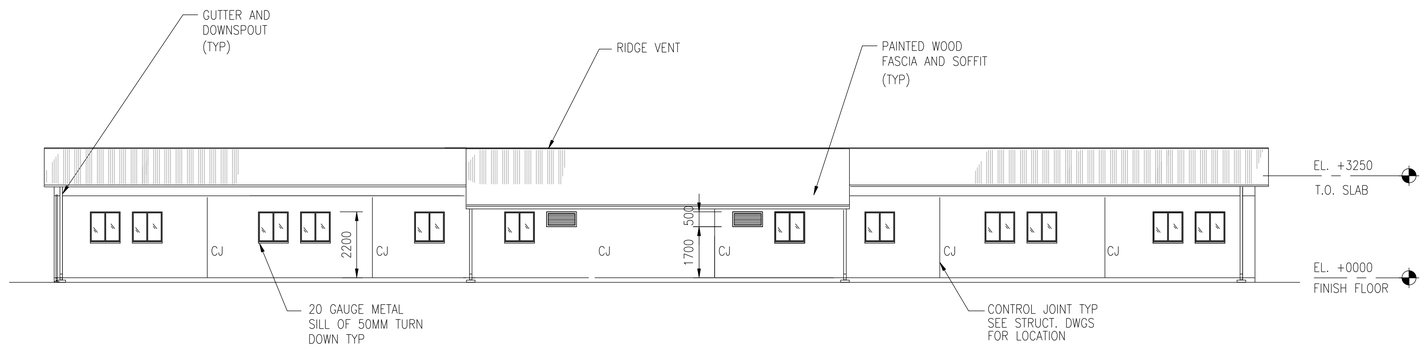

A FRONT ELEVATION

HQ-A-03 SCALE: 1:100

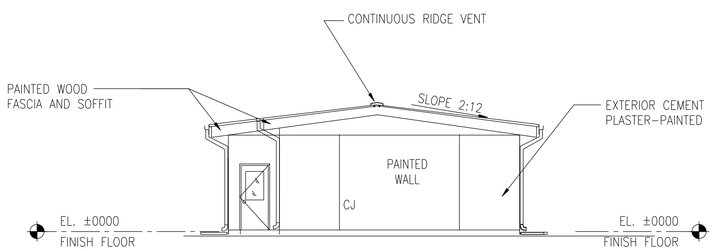

B SIDE ELEVATION

HQ-A-03 SCALE: 1:100

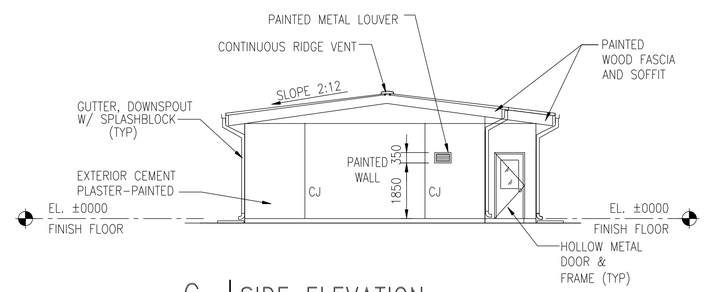

C SIDE ELEVATION

HQ-A-03 SCALE: 1:100

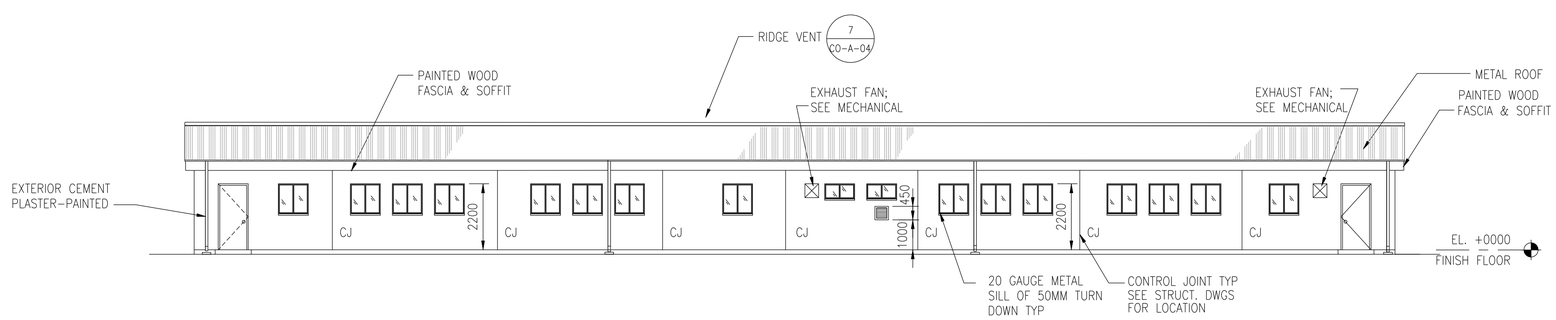

D REAR ELEVATION

HQ-A-03 SCALE: 1:100

1 0 1 2 3 4 5 6 7 8 9
1:100

SYMBOL	DESCRIPTION	DATE	APR

DESIGNED BY: YSK
DATE: 06-27-07
DWN BY: JSG
SUBMITTED BY: CHIEF, PROJ. DEV. DIV.
CHK BY: PLD
FILE NO.: AF0707RD-HQ-A-03

US Army Corps of Engineers
Transatlantic Programs Center

ANA REGIONAL BRIGADE
PAKTIKA, AFGHANISTAN

BATTALION HQ BUILDING
EXTERIOR ELEVATIONS
AND BUILDING SECTIONS

SHEET REFERENCE NUMBER:
RD
HQ-A-03

$(getvar, "dwgprefix")$(getvar, "dwgname")$(edtime, O, MON DD", YYYY - H:MMam/pm)

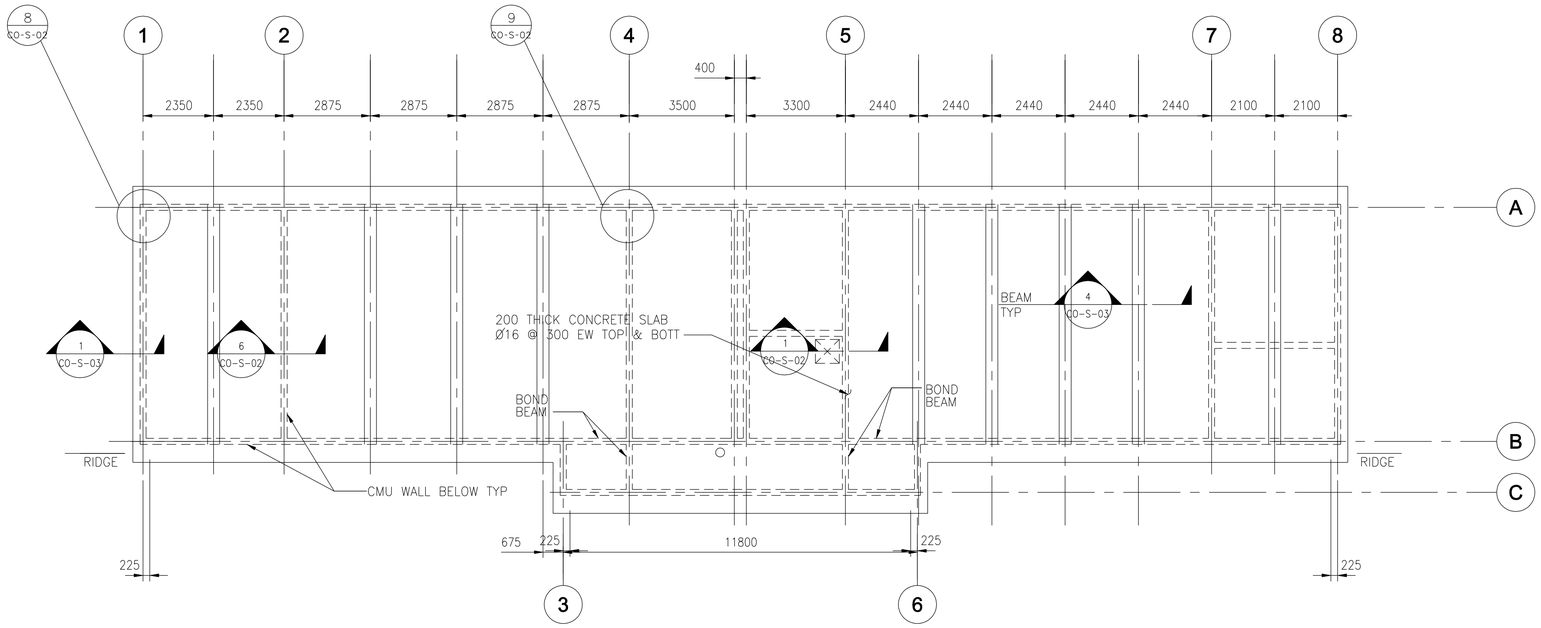

1 ROOF FRAMING PLAN

HQ-S-01 SCALE: 1:100

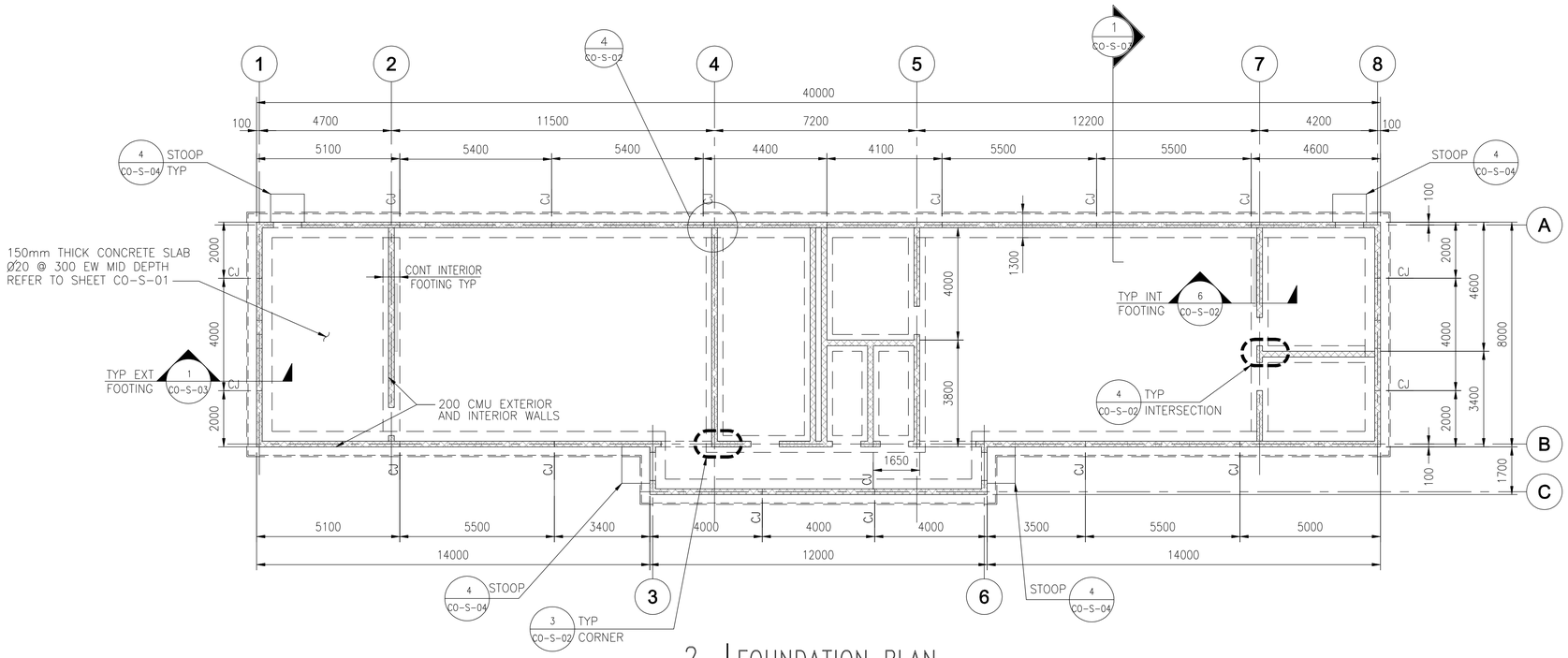

2 FOUNDATION PLAN

HQ-S-01 SCALE: 1:100

NOTES:

1. FOR EXACT CMU WALL LOCATIONS REFER TO ARCHITECTURAL DWGS.
2. FOR LOCATION OF SLOPED AND DEPRESSED SLAB, SEE ARCHITECTURAL DWGS.

FOUNDATIONS ARE DESIGNED USING AN ALLOWABLE BEARING PRESSURE OF 0.75 KG/SQ. CM (1500 PSF), AND BOTTOM OF FOOTINGS ARE PLACED AS SHOWN ON DRAWINGS. GEOTECHNICAL INVESTIGATION SHALL CONFIRM BEARING CAPACITY TO BE NO LESS THAN 0.75 KG/SQ CM. IF GEOTECHNICAL INVESTIGATION SHOWS LESS THAN 0.75 KG/SQ CM THE CONTRACTOR SHALL REDESIGN FOOTINGS BASED ON THE GEOTECHNICAL INVESTIGATION. SEE SPECIFICAITON PARAGRAPH, GEOTECHNICAL, FOUNDATION AND SURVEY.

SYMBOL	DESCRIPTION	DATE	APR

DESIGNED BY: TCP
DWN BY: TCP
CHK BY: KGO
DATE: 06-27-07
SUBMITTED BY: PHILIP LL PINELLO
CHIEF, PDT PACIFICS DEV
FILE NO.: AF0707RD-HQ-S-01

US Army Corps of Engineers
Transatlantic Programs Center

ANA REGIONAL BRIGADE
PAKTIKA, AFGHANISTAN

BATTALION HQ BUILDING
FOUNDATION PLAN AND ROOF FRAMING PLAN

SHEET REFERENCE NUMBER:
RD
HQ-S-01

1 0 1 2 3 4 5 6 7 8 9
1:100

$(getvar, "dwgprefix")$(getvar, "dwgname")$(edtime, 0, MON DD",", YYYY - H:MMam/pm)

NOTES:

1. FOR STANDARD DETAILS SEE DWG. No. (CO-M-01, 02, 03 & 04).
2. FOR CONTROL DIAGRAMS SEE DWG. No. (CO-M-05).
3. FOR LEGEND AND ABBREVIATION SEE DWG. No. (CO-M-06).

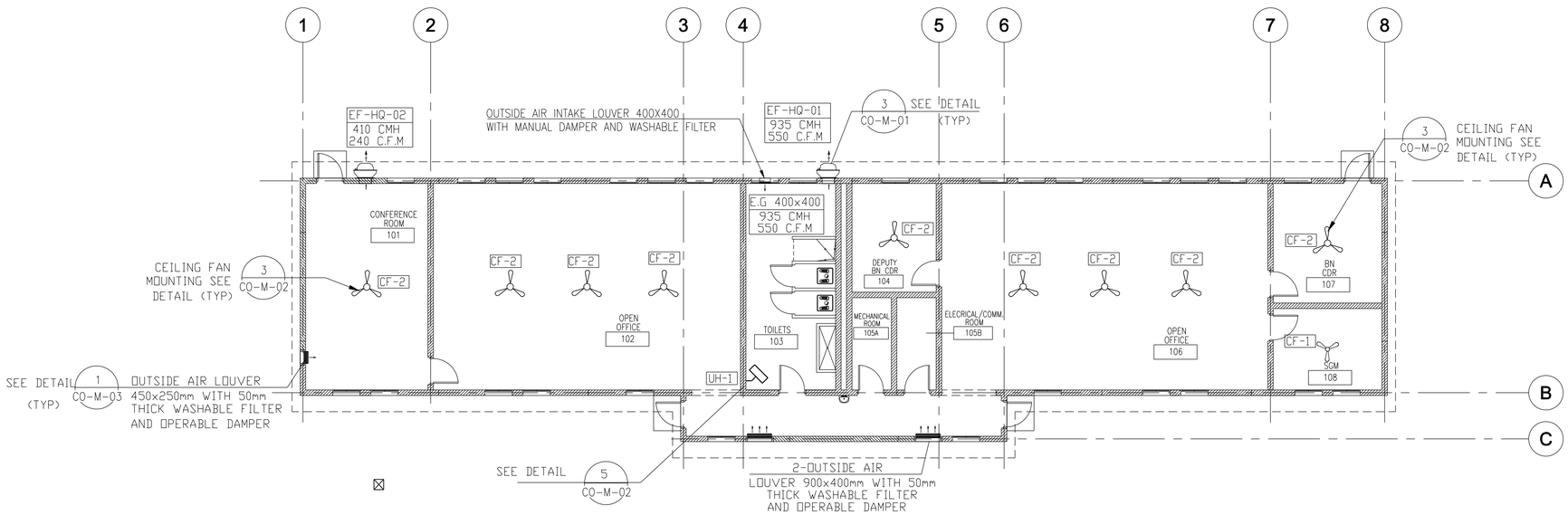

1 MECHANICAL FLOOR PLAN

HQ-M-01 SCALE: 1:100

DIESEL HEATING AND EVAPORATIVE COOLING

1. THIS FACILITY IS TO BE PROVIDED WITH FACTORY PACKAGED CENTRAL TYPE DIESEL HEATING AND EVAPORATIVE COOLING SYSTEMS WITH SUPPLY AND RETURN DUCTWORK. FULL HVAC DESIGN FOR THIS FACILITY WILL BE PROVIDED TO THE CONTRACTOR.
2. THE DESIGN AND SELECTION OF EQUIPMENT FOR THE DIESEL HEAT AND EVAPORATIVE COOLING SYSTEMS WILL BE IN ACCORDANCE WITH THE DESIGN GUIDANCE SHOWN ON SHEET CO-M-07 AND WILL INCLUDE TOILET EXHAUST AND OTHER VENTILATION SYSTEMS CURENTLY SHOWN ON THESE PLANS.

ELECTRIC UNIT HEATER SCHEDULE (UH)

UNIT NUMBER	QTY.	ELECTRICAL DATA				REMARKS
		KW	VOLTS	PHASE	HERTZ	
UH-1	1	2	220	1	50	WALL SUSPENDED

(NOTE: PROVIDE WITH INTEGRAL ADJUSTABLE THERMOSTAT

CEILING FAN SCHEDULE (CF)

UNIT NUMBER	QTY.	TYPE (NOTE 1)	FAN DIAMETER	MAX WATTS	ELECTRICAL DATA			REMARKS
					VOLTS	PHASE	HERTZ	
CF-1	1	A	35 in	65	220	1	50	3-SPEED
CF-2	9	A	56 in	65	220	1	50	3-SPEED

NOTES:- 1- (A) WITHOUT LIGHT FIXTURE
2- BOTTOM OF FAN MOUNTING HEIGHT = MINIMUM 2500mm A.F.F
3- PROVIDE WITH REMOTE WALL MOUNTED, ON-OFF SWITCH LOCATED ON ELECTRICAL DRAWINGS.

EXHAUST FAN SCHEDULE (EF)

UNIT SYMBOL BUILDING NUMBER	SERVICE	TYPE	AIR QUANTITY		MAXIMUM WHEEL DIAMETER		MAX FAN RPM	STATIC PRESSURE		ELECTRICAL DATA				TEMP. CONTROL DIAGRAM	INTERLOCK WITH	DRIVE TYPE	REMARKS
			CMH	CFM	MM	INCHES		mmH2O	IN W.G.	H.P.	VOLTS	PHASE	HERTZ				
EF-HQ-01	TOILET	W-CTFG-GP	930	550	-	-	1290	6.35	1/4	1/4	220	1	50	E-4	----	DIRECT	
EF-HQ-02	CONF. RM	W-CTFG-GP	405	240	-	-	1200	6.35	1/4	1/4	220	1	50	E-4	----	DIRECT	

1:100 DRAWING NOT TO SCALE

SYMBOL	DESCRIPTION	DATE	APR

DESIGNED BY: XXX
DATE: 06-27-07
DWN BY: XXX
SUBMITTED BY: R. GREWAL CHIEF, DIV BLDG SYSTEMS
CHK BY: XXX
FILE NO.: AF0707RD-HQ-M-01

US Army Corps of Engineers Transatlantic Programs Center

ANA REGIONAL BRIGADE
PAKTIKA, AFGHANISTAN

BATTALION HQ BUILDING
MECHANICAL FLOOR PLAN AND SCHEDULES

SHEET REFERENCE NUMBER:
RD
HQ-M-01

$(getvar, "dwgprefix")$(getvar, "dwgname")$(edtime, 0, MON DD",".YYYY - HHMMam/pm)

NOTE:

1. SEE SHEET CO-P-01 & CO-P-02 & CO-P-07 FOR SYMBOLS, ABBREVIATIONS, GENERAL NOTES AND EQUIPMENT SCHEDULES.

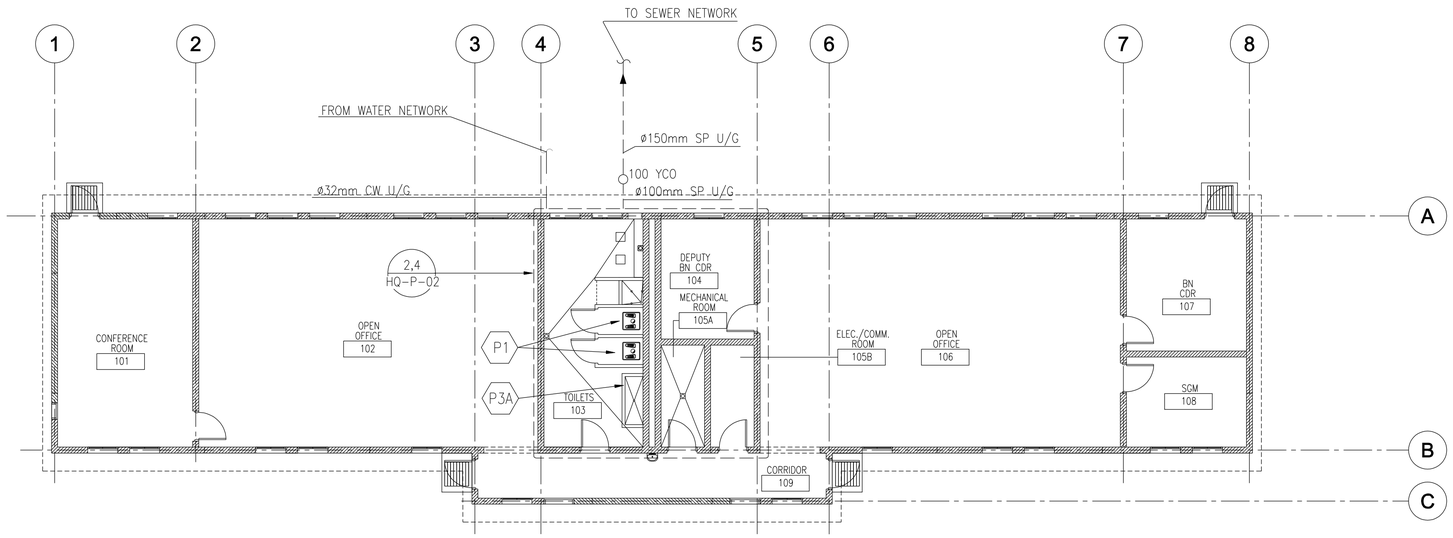

1 PLUMBING FLOOR PLAN

HQ-P-01

SCALE: 1:100

1 0 1 2 3 4 5 6 7 8 9

1:100

SYMBOL	DESCRIPTION	DATE	APR

DESIGNED BY: XXX
DATE: 06-27-07
DWN BY: XXX
SUBMITTED BY: R. CREWAL
CHK BY: XXX
FILE NO.: AF0707RD-HQ-P-02

US Army Corps of Engineers Transatlantic Programs Center

ANA REGIONAL BRIGADE
PAKTIKA, AFGHANISTAN

BATTALION HQ BUILDING

PLUMBING FLOOR PLAN

SHEET REFERENCE NUMBER:
RD
HQ-P-01

$(getvar, "dwgprefix")$(getvar, "dwgname")$(edtime, 0, MON DD"", YYYY - H:MMam/pm)

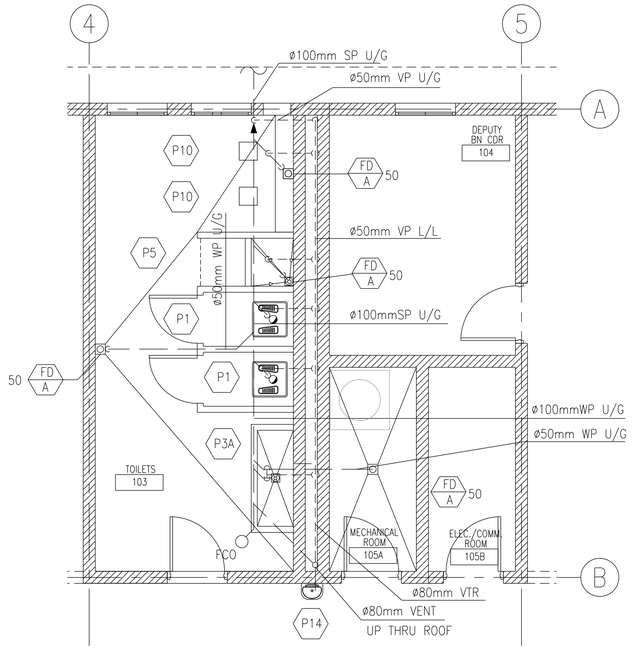

1 DRAINAGE PIPING PLAN

HQ-P-02 SCALE: 1:50

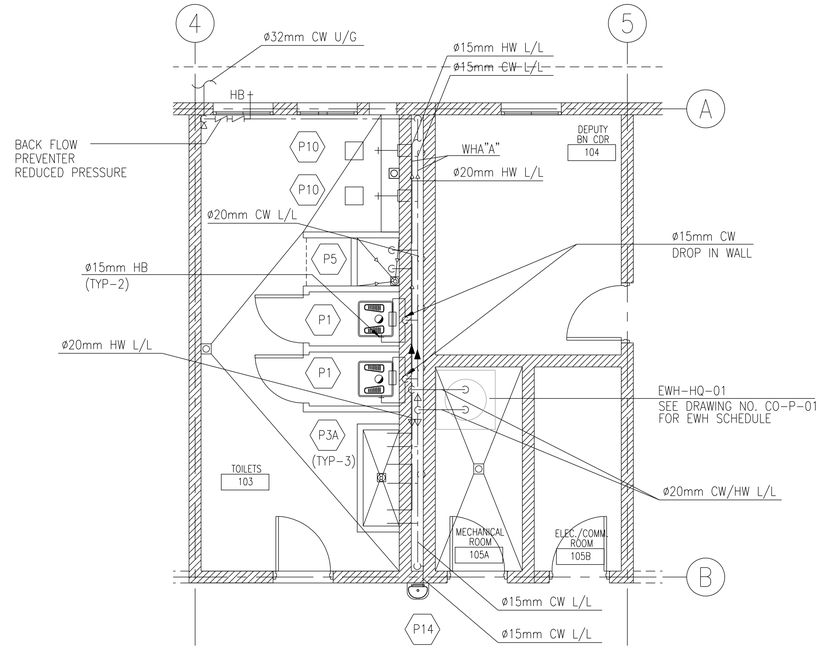

2 CW & HW PIPING PLAN

HQ-P-02 SCALE: 1:50

NOTE:

1. SEE SHEET CO-P-01 & CO-P-02 & CO-P-07 FOR SYMBOLS, ABBREVIATIONS, GENERAL NOTES AND EQUIPMENT SCHEDULES.

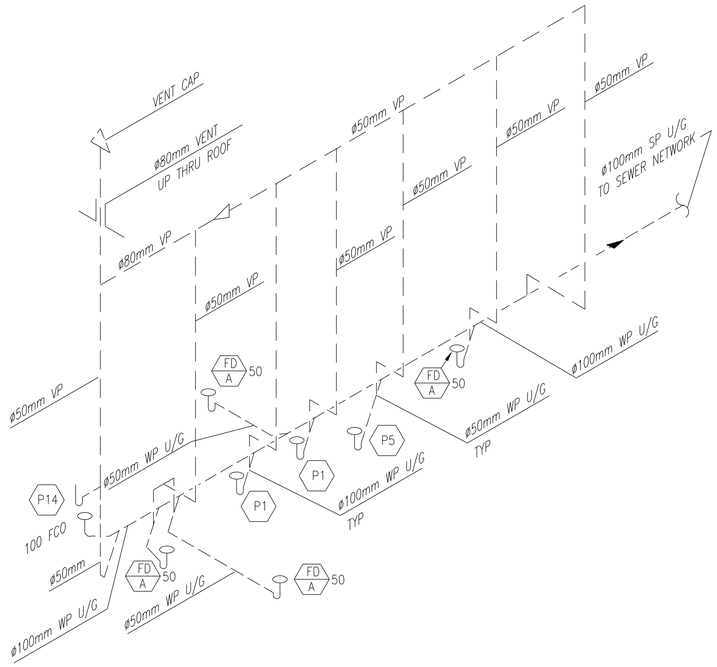

3 DRAINAGE RISER DIAGRAM

HQ-P-02 SCALE: N.T.S

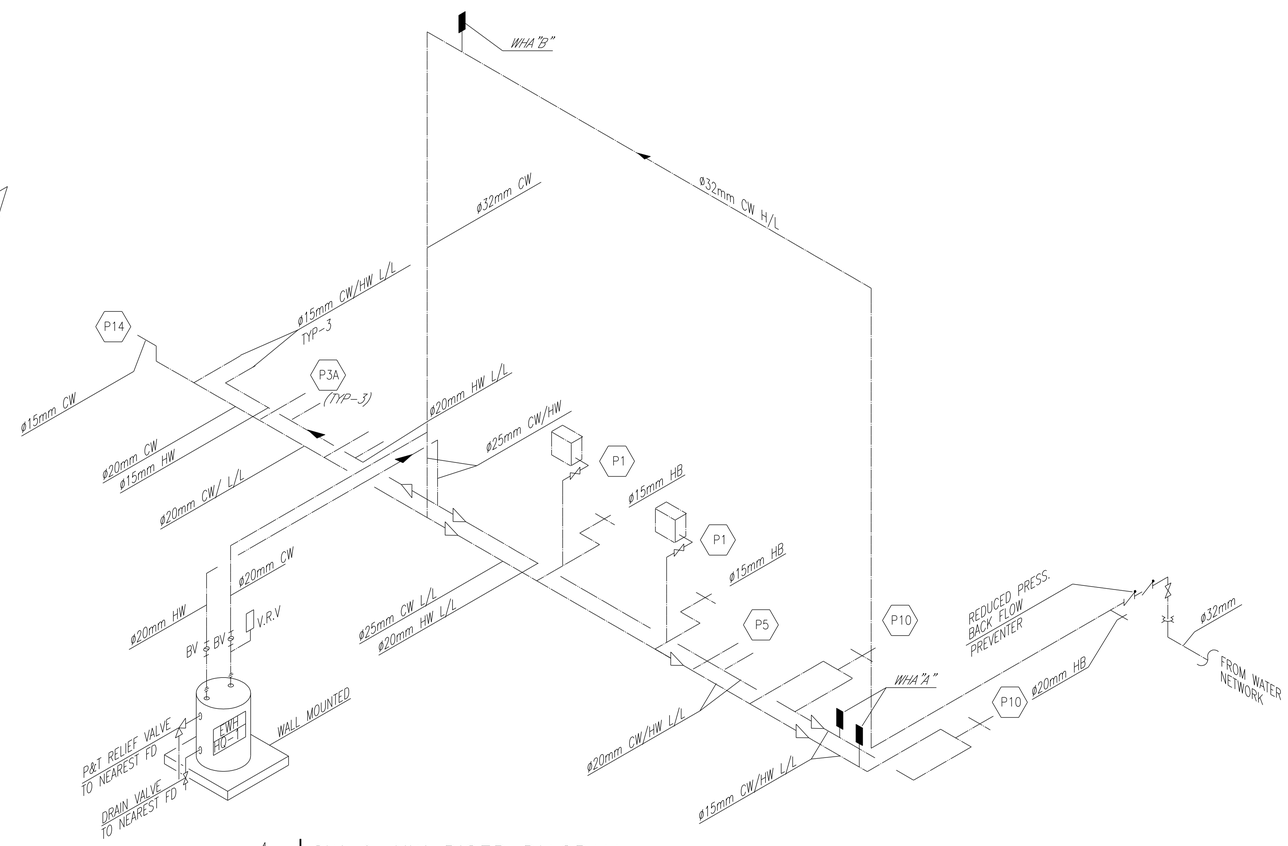

4 CW & HW RISER DIAGRAM

HQ-P-02 SCALE: N.T.S

1:50

SYMBOL	DESCRIPTION	DATE	APR

DESIGNED BY: XXX
DATE: 06-27-07
DWN BY: XXX
SUBMITTED BY: R. GREWAL, CHIEF, DIV BLDG SYSTEMS
CHK BY: XXX
FILE NO.: AF0707RD-HQ-P-02

US Army Corps of Engineers Transatlantic Programs Center

ANA REGIONAL BRIGADE
PAKTIKA, AFGHANISTAN

BATTALION HQ BUILDING
DRAINAGE, CW & HW PIPING PLANS AND RISER DIAGRAMS

SHEET REFERENCE NUMBER:
RD
HQ-P-02

$(getvar, "dwgprefix")$(getvar, "dwgname")$(edtime, O, MON DD"", YYYY - H:MMam/pm)

BATTALION HQ PANEL PP

(BUILDING#403,413, 433,442,AND453)

AIC: 25KA

100AT/100AF MCB
MLO

VOLTAGE 380/220V, 3PH, 5W, 50HZ

FEED TOP

MOUNTING SURFACE
LOCATION ROOM # 105

DESCRIPTION	LOAD (VA) A	LOAD (VA) B	LOAD (VA) C	AMP	POLE	CKT	A B C	CKT	POLE	AMP	LOAD (VA) A	LOAD (VA) B	LOAD (VA) C	DESCRIPTION
RM 101 LTG	800			20	1	1		2	1	20	2420			RM 106 LTG
RM 102 LTG		2420		20	1	3		4	1	20		1200		RM 101,102, RECP
RM 104,105 & CORRIDOR RECP			1200	20	1	5		6	1	20			1600	RM 106,107,108 RECP.
TOILET 103,104,105 LTG	1740			20	1	7		8	1	20	180			TTC RECP.
FOR FUTURE SELF DETECTOR		700		20	1	9		10	1	20		180		EWC RECP.
FOR FUTURE SELF DETECTOR			600	20	1	11		12	1	20			820	RM 107,108 LTG
SPARE				20	1	13		14	1	20	600			RM 104,106,107,108 FANS
SPARE				20	1	15		16	1	20		2000		UH-1 RM103
SPARE				20	1	17		18	1	20			400	EF-HQ-02 RM 101
RM 101,102 FANS	400			20	1	19		20	1	20	400			EF-HQ-01 RM 103
RM 108 CU-1		1125		20	1	21		22	1	20				SPARE
RM 104 CU-1			1125	20	1	23		24	1	20				SPARE
EWH-HQ-01	2000			20	3	25		26	1	20				SPARE
		2000				27		28	1	20				SPARE
			2000			29		30	1	20				SPARE
RM 101 CU-2	1375			20	1	31		32	1	20	1875			RM 106 CU-3
RM 101 CU-2		1375		20	1	33		34	1	20		1875		RM 106 CU-3
RM 102 CU-3			1875	20	1	35		36	1	20			1875	RM 106 CU-3
RM 102 CU-3	1875			20	1	37		38	1					SPACE
RM 102 CU-3		1875		20	1	39		40	1					SPACE
RM 107 CU-2			1375	20	1	41		42	1					SPACE
SUB-TOTALS=	8190	9495	8175								5475	5255	4695	= SUB-TOTALS

	V A	AMPS
TOTAL PHASE A=	13665	62.11
TOTAL PHASE B=	14750	67.05
TOTAL PHASE C=	12870	58.5
TOTAL CONNECTED LOAD	41.29	KVA
DEMAND FACTOR	0.89	
DEMAND LOAD	36.74	KVA
20% FUTURE LOAD	7.35	KVA
TOTAL LOAD	44.09	KVA
TOTAL AMPERE	66.98	AMP

DESIGNBUILD

1. SEE MECHANICAL DRAWING FOR DESIGN BUILD REQUIRMENTS USING DIESEL HEATING AND EVAPORATIVE COOLING IN THIS FACILTY.
2. COORDINATE WITH MECHANICAL GESIGNER AND REVIS ELECTRICAL DESIGN, POWER DISTRIBUTION AND PANEL SCHEDULES TO MEET NEW REQUIEMENTS.

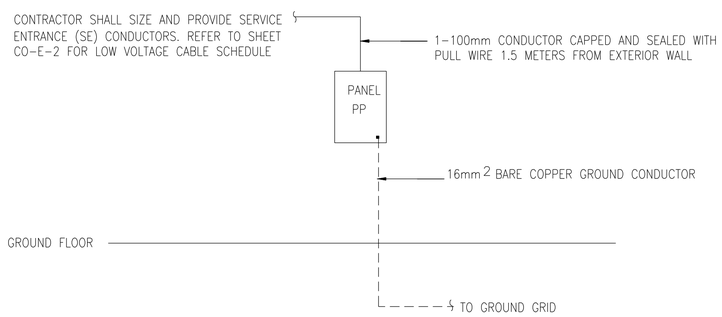

1 POWER RISER DIAGRAM
HQ-E-01 SCALE: N.T.S.

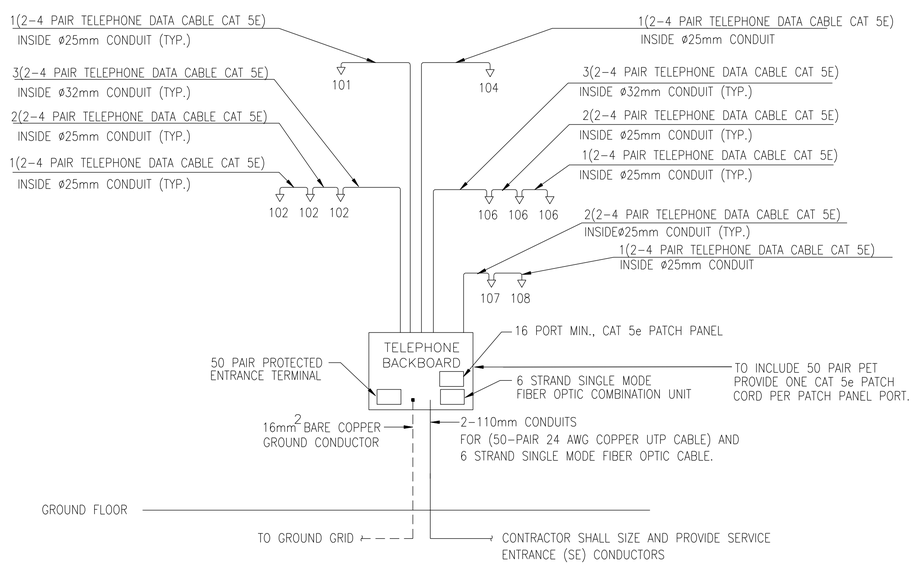

2 TELEPHONE/DATA RISER DIAGRAM
HQ-E-01 SCALE: N.T.S.

NOTES:

1. SEE SHEET CO-E-01 FOR SYMBOLS, ABBREVIATIONS AND GENERAL NOTES.
2. SEE SHEET CO-E-02 FOR BRANCH CIRCUIT WIRE SCHEDULE.

DRAWING NOT TO SCALE

SYMBOL	DESCRIPTION	DATE	APR

DESIGNED BY: XXX
DWN BY: XXX
CHK BY: XXX
DATE: 06-27-07
SUBMITTED BY: R. CREWAL CHIEF, PDT BLDG SYSTEMS
FILE NO.: AF0707 HQ-E-01

US Army Corps of Engineers Transatlantic Programs Center

ANA REGIONAL BRIGADE
PAKTIKA, AFGHANISTAN

BATTALION HQ BUILDING
PANEL SCHEDULE AND RISER DIAGRAMS

SHEET REFERENCE NUMBER:
RD
HQ-E-01

$(getvar, "dwgprefix")$(getvar, "dwgname")$(edtime, 0, MON DD"," YYYY - HHMMam/pm)

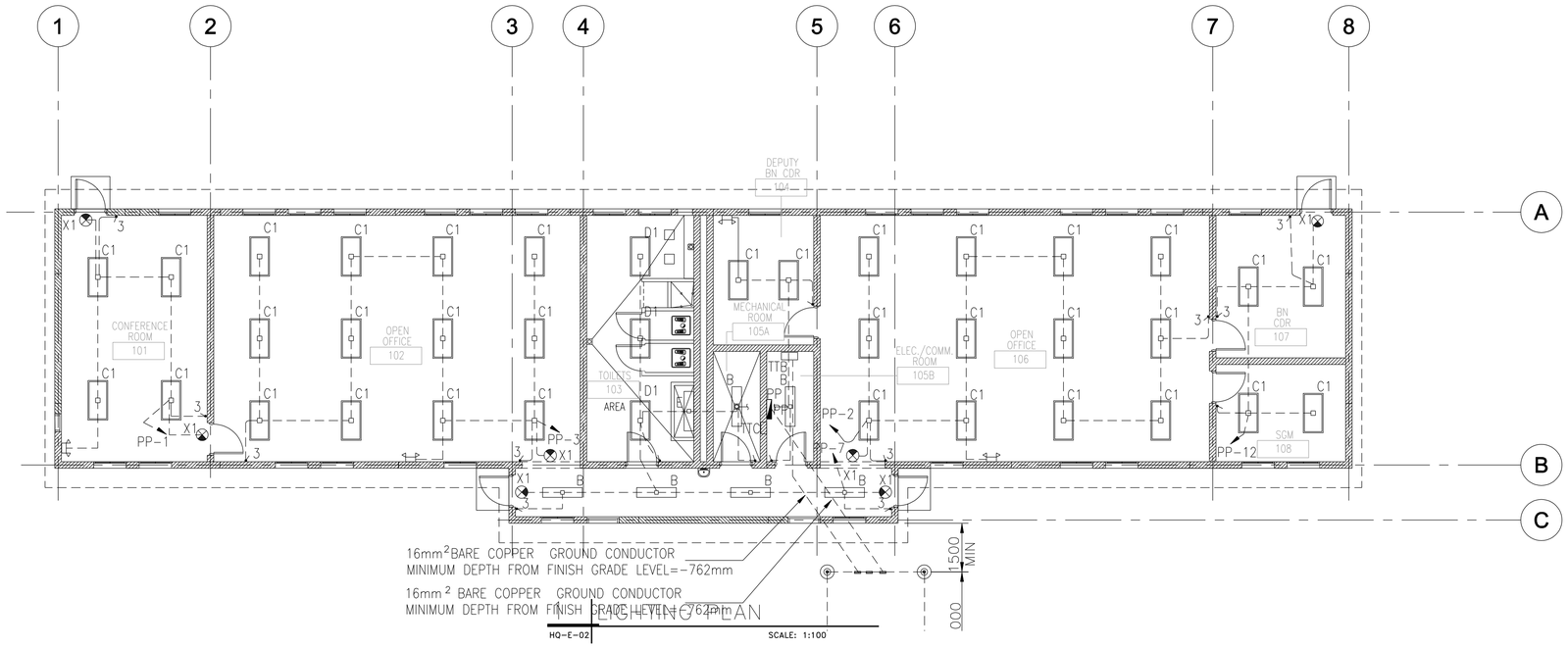

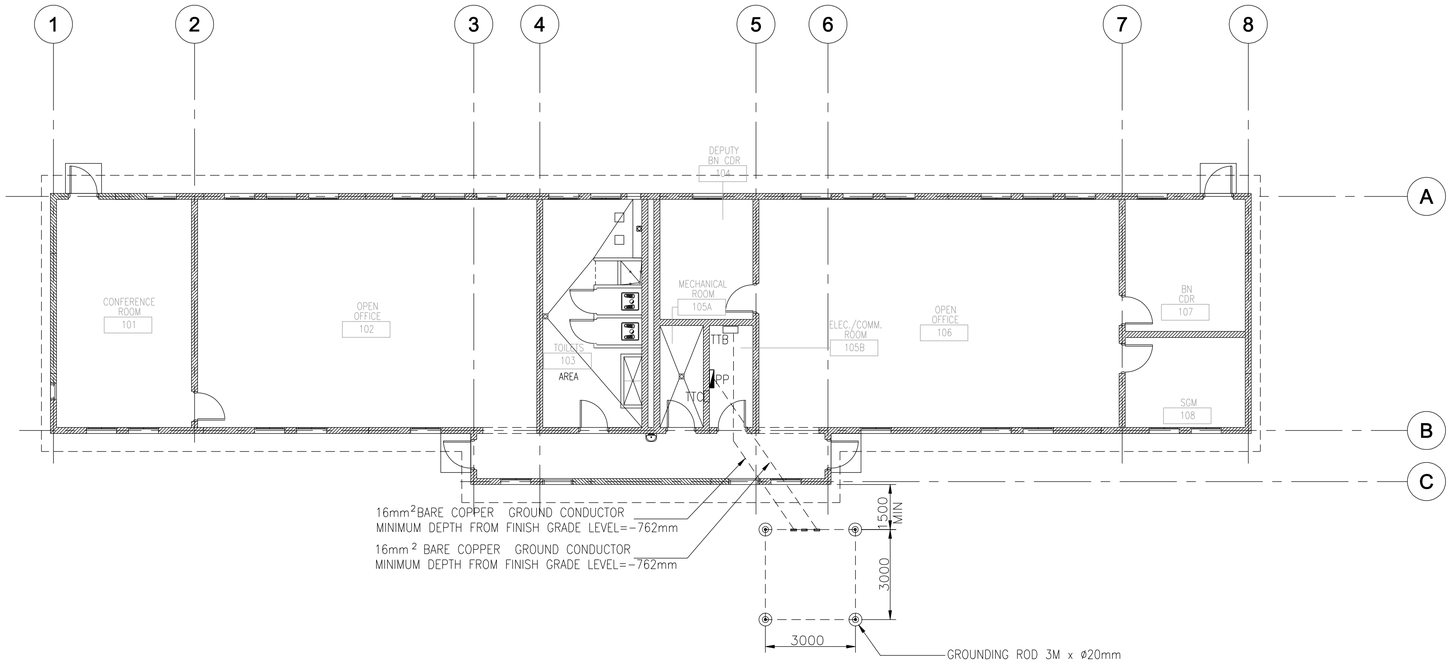

2 GROUNDING PLAN

HQ-E-02 SCALE: 1:100

DESIGNBUILD

1.SEE MECHANICAL DRAWINGS FOR DESIGN BUILD REQUIREMENTS USING DIESEL HEATING AND EVAPORATIVE COOLING IN THIS FACILTY.

2. COORDINATE WITH MECHANICAL DESIGNER AND REVISE ELECTRICAL DESIGN, POWER DISTRIBUTION AND PANEL SCHEDULES TO MEET NEW REQUIREMENTS.

NOTES:

1. SEE SHEETS CO-E-01 AND CO-E-02 FOR SYMBOLS, ABBREVIATIONS, GENERAL NOTES AND LIGHTING FIXTURE SCHEDULE.
2. SEE SHEETS CO-E-03 TO CO-E-05 FOR STANDARD DETAILS.
3. SEE SHEET HQ-E-01 FOR PANEL SCHEDULES AND RISER DIAGRAMS FOR POWER SYSTEM.

1:100 DRAWING NOT TO SCALE

SYMBOL	DESCRIPTION	DATE	APR

DESIGNED BY: XXX
DATE: 06-27-07
DWN BY: XXX
SUBMITTED BY: R. CREWAL
CHIEF, PDD, BLDG SYSTEMS
CHK BY: XXX
FILE NO.: AF0707RD-HQ-E-02

US Army Corps of Engineers Transatlantic Programs Center

ANA REGIONAL BRIGADE
PAKTIKA, AFGHANISTAN

BATTALION HQ BUILDING

GROUNDING AND LIGHTING PLANS

SHEET REFERENCE NUMBER:
RD
HQ-E-02

$(getvar, "dwgprefix")$(getvar, "dwgname")$(edtime, 0, MON DD"", YYYY - H:MMam/pm)

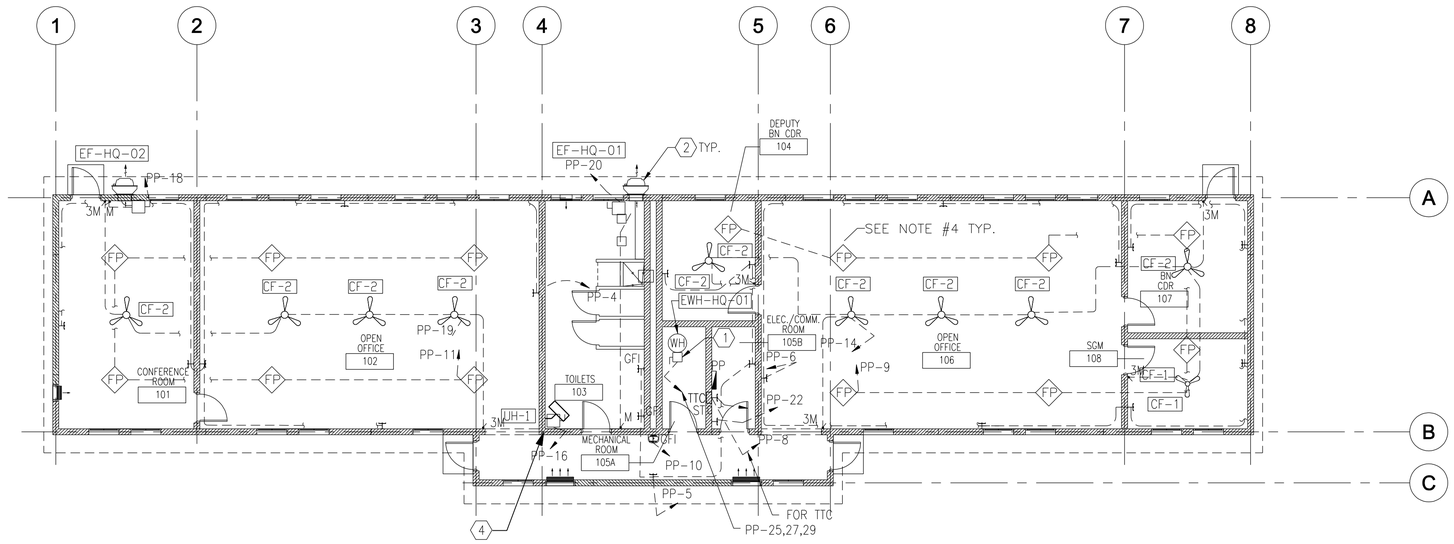

1 POWER PLAN

HQ-E-03 SCALE: 1:100

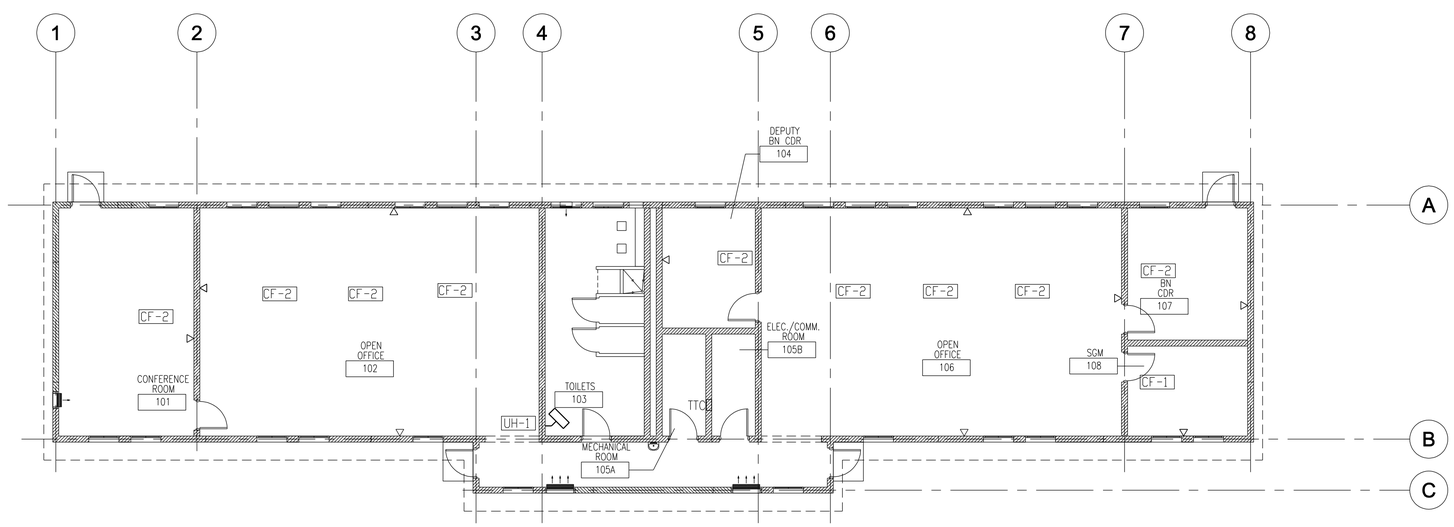

2 COMMUNICATION PLAN

HQ-E-03 SCALE: 1:100

DESIGNBUILD

1.SEE MECHANICAL DRAWINGS FOR DESIGN BUILD REQUIREMENTS USING DIESEL HEATING AND EVAPORATIVE COOLING IN THIS FACILTY.

2.COORDINATE WITH MECHANICAL DESIGNER AND REVISE ELECTRICAL DESIGN, POWER DISTRIBUTION AND PANEL SCHEDULES TO MEET NEW REQUIREMENTS.

KEY NOTES:

1. PROVIDE 30A/3P/380V NON-FUSED DISCONNECT SWITCH IN NEMA 1 ENCLOSURE.
2. SEE SHEET CO-M-05, FOR EXHAUST FAN CONTROL DIAGRAM. SWITCH FOR EXHAUST FAN IS 2-SPEED.
3. "NOT USED"
4. PROVIDE 20A/1P/220V NON-FUSED DISCONNECT IN NEMA 1 ENCLOSURE

NOTES:

1. SEE SHEETS CO-E-01 AND CO-E-02 FOR SYMBOLS, ABBREVIATIONS AND GENERAL NOTES
2. SEE SHEETS CO-E-03 TO CO-E-05 FOR STANDARD DETAILS.
3. SEE SHEET HQ-E-01 FOR PANEL SCHEDULES , RISER DIAGRAMS FOR POWER SYSTEM AND COMMUNICATION RISER DIAGRAM
4. PROVIDE FIRE ALARM PULL BOXES, CONDUITS AND WIRING FOR FUTURE SELF SMOKE DETECTOR

1 0 1 2 3 4 5 6 7 8 9
1:100

DRAWING NOT TO SCALE

SYMBOL	DESCRIPTION	DATE	APR

DESIGNED BY: XXX
DWN BY: XXX
CHK BY: XXX
DATE: 06-27-07
SUBMITTED BY: R. GREWAL CHIEF, ELEC. BLDG SYSTEMS
FILE NO.: AF0707HQ-E-03

US Army Corps of Engineers Transatlantic Programs Center

ANA REGIONAL BRIGADE
PAKTIKA, AFGHANISTAN

BATTALION HQ BUILDING

POWER AND COMMUNICATION PLANS

SHEET REFERENCE NUMBER:
RD
HQ-E-03

$(getvar, "dwgprefix")$(getvar, "dwgname")$(edtime, 0, MON DD"," YYYY - HHMMam/pm)

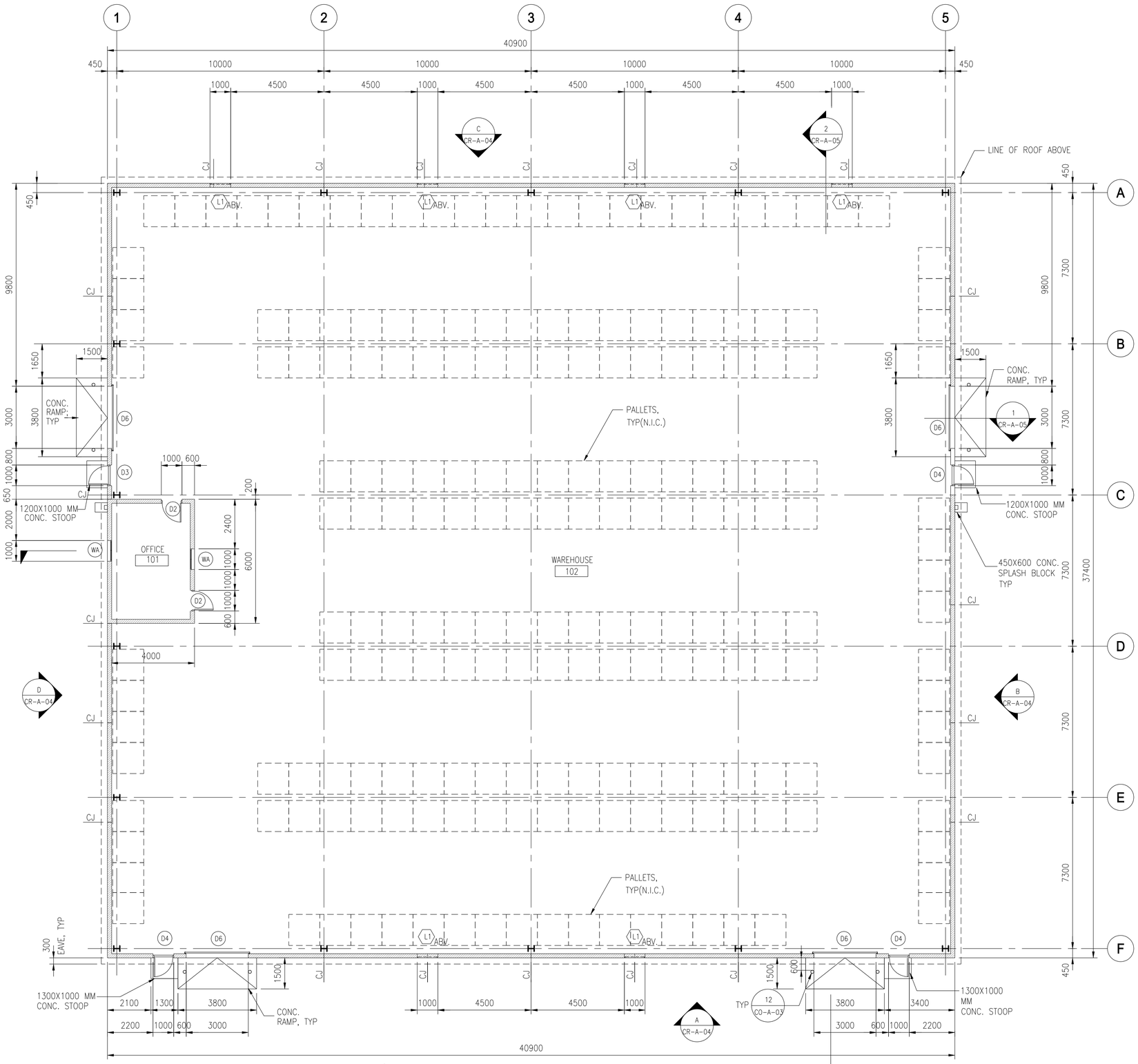

1 FLOOR PLAN

CR-A-01 SCALE: 1:100

FINISHING SCHEDULE LEGEND

FLOOR

F1	SEALED CONCRETE

WALL

W1	WHITE PAINTED PLASTER
W2	FACTORY FINISHED METAL SIDING

CEILING

C1	GYPSUM BOARD – PAINTED
C2	EXPOSED STRUCTURE – PAINTED

WALL SYMBOLS:

CMU WALL +2800MM HIGH WITH PLASTER FINISH.

CJ — CMU CONTROL JOINT

FINISHING SCHEDULE

Room No.	Usage	Floor	Wall	Ceiling
101	OFFICE	F1	W1	C1
102	WAREHOUSE	F1	W1\W2	C2

NOTES:

1– ALL WALLS ARE CMU UNLESS NOTED OTHERWISE.

2– ALL WALL TERMINATE AT CEILING UNLESS NOTED OTHERWISE.

3– ALL DIMENSIONS ARE TO FACE OF CMU UNLESS NOTED OTHERWISE.

4– ALL VERTICAL DIMENSIONS & LEVELS ARE FROM GROUND FLOOR FINISHED SLAB. THIS ELEVATION IS +0000.

5– SEE DRAWING CO–A–05 & CO–A–06 FOR OPENING SCHEDULES & TYPES.

6– SEE DRAWING CO–A–02, CO–A–03 & CO–A–04 FOR STANDARD DETAILS.

7– SEE CIVIL DRAWINGS FOR BUILDING COORDINATES AND FINISH FLOOR ELEVATION.

8– SEE STRUCTURAL DRAWINGS FOR LOCATION OF BUILDING CONTROL AND SEISMIC JOINTS.

9– TOTAL AREA OF BUILDING IS 1529.66S M2.

SYMBOL	DESCRIPTION	DATE	APR

DESIGNED BY: YSK
DATE: 06-27-07
DWN BY: JSG
SUBMITTED BY: PHILIP D. DINELLO PROJECT DEV. ARCHITECT
CHK BY: PLD
FILE NO.: AF0707CR-A-01

US Army Corps of Engineers Transatlantic Programs Center

ANA REGIONAL BRIGADE
PAKTIKA, AFGHANISTAN

CENTRAL RECEIVING WAREHOUSE

FLOOR PLAN

SHEET REFERENCE NUMBER:
V
CR–A–01

1:100

$(getvar, "dwgprefix")$(getvar, "dwgname")$(edtime, 0, MON DD"", YYYY – H:MMam/pm)

NOTES:

1- SEE SHEET CR-A-01 FOR FINISH SCHEDULE.

2- SEE SHEET CO-E-01 FOR LIGHTING LEGEND.

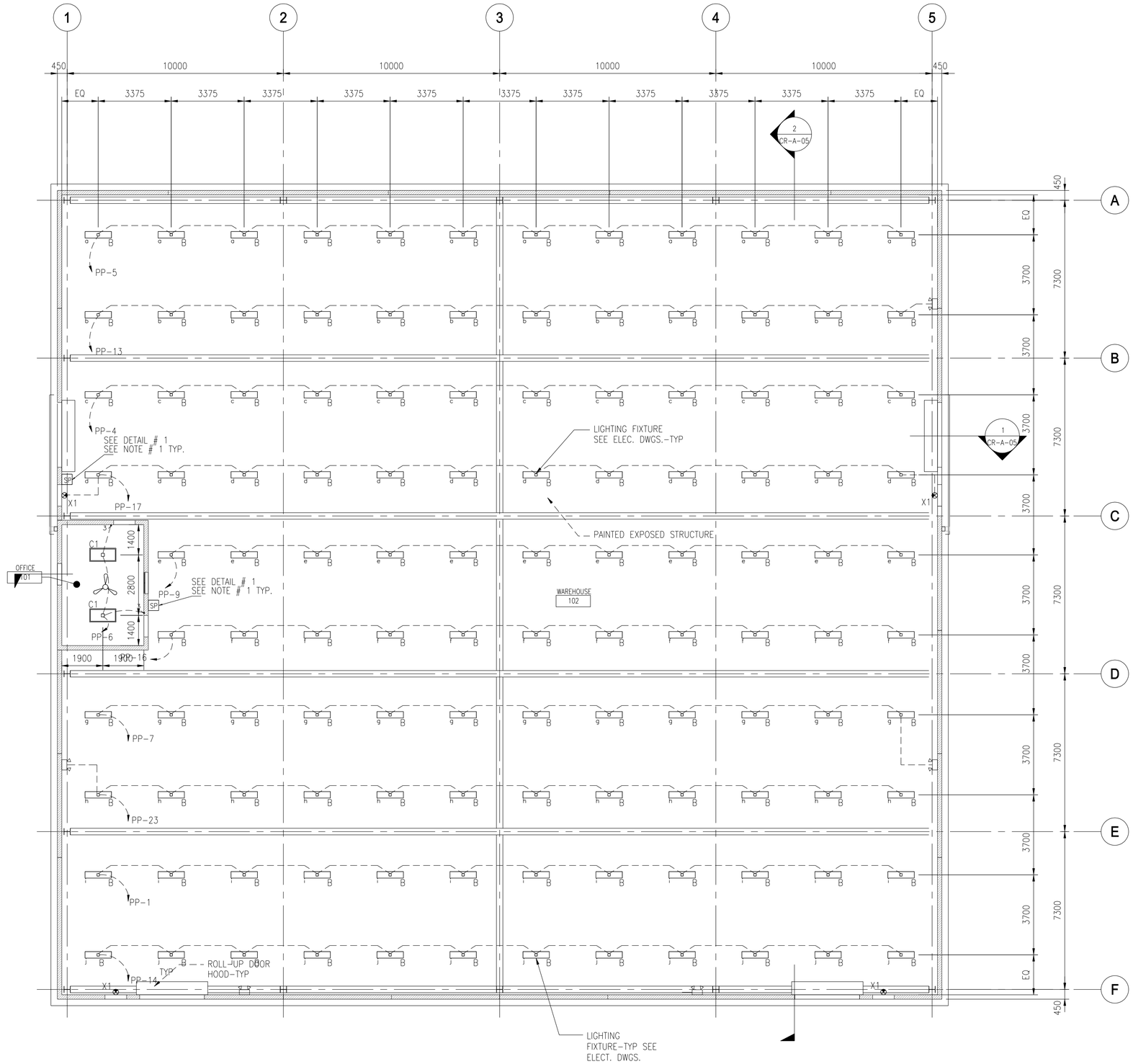

1 REFLECTED CEILING PLAN

CR-A-02

SCALE: 1:100

1 0 1 2 3 4 5 6 7 8 9

1:100

SYMBOL	DESCRIPTION	DATE	APR

DESIGNED BY: YSK
DWN BY: JSG
CHK BY: PLD
DATE: 06-27-07
SUBMITTED BY: CHIEF, PROJ. DEV. PACELLO
FILE NO.: AF0707CR-A-02

US Army Corps of Engineers Transatlantic Programs Center

ANA REGIONAL BRIGADE
PAKTIKA, AFGHANISTAN

CENTRAL RECEIVING WAREHOUSE

REFLECTED CEILING PLAN

SHEET REFERENCE NUMBER:
CR-A-02

$(getvar, "dwgprefix")$(getvar, "dwgname")$(edtime, 0, MON DD", YYYY - H:MMam/pm)

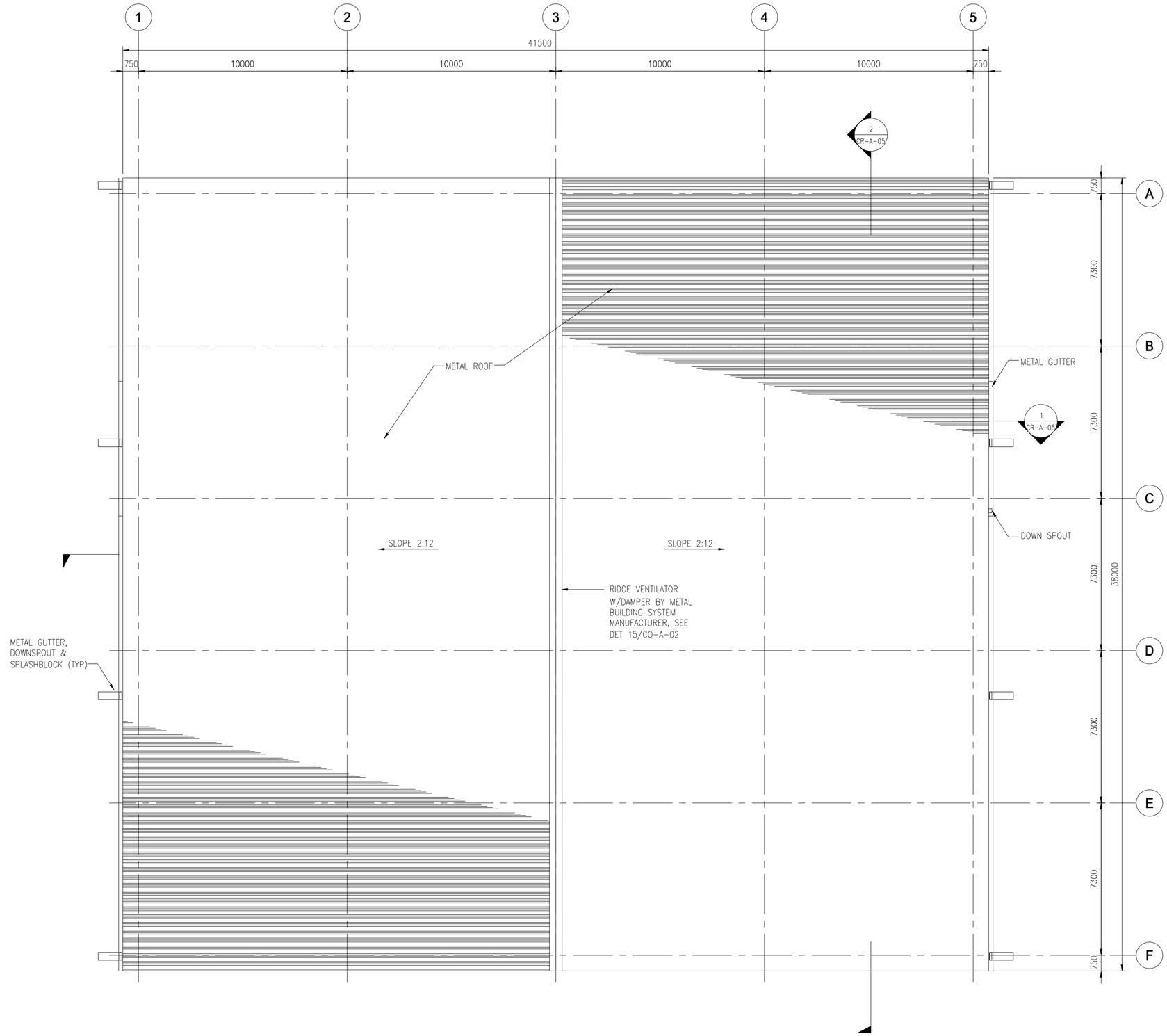

1 ROOF PLAN

CR-A-03 SCALE: 1:100

1 0 1 2 3 4 5 6 7 8 9
1:100

SYMBOL	DESCRIPTION	DATE	APR

DESIGNED BY: YSK
DATE: 06-27-07
DWN BY: JSG
SUBMITTED BY: CHIEF, DANELLO PROJECTS DEV
CHK BY: PLD
FILE NO.: AF0707CR-A-03

US Army Corps of Engineers Transatlantic Programs Center

ANA REGIONAL BRIGADE
PAKTIKA, AFGHANISTAN

CENTRAL RECEIVING WAREHOUSE

ROOF PLAN

SHEET REFERENCE NUMBER:
CR-A-03

$(getvar, "dwgprefix")$(getvar, "dwgname")$(edtime, 0, MON DD"", YYYY - H:MMam/pm)

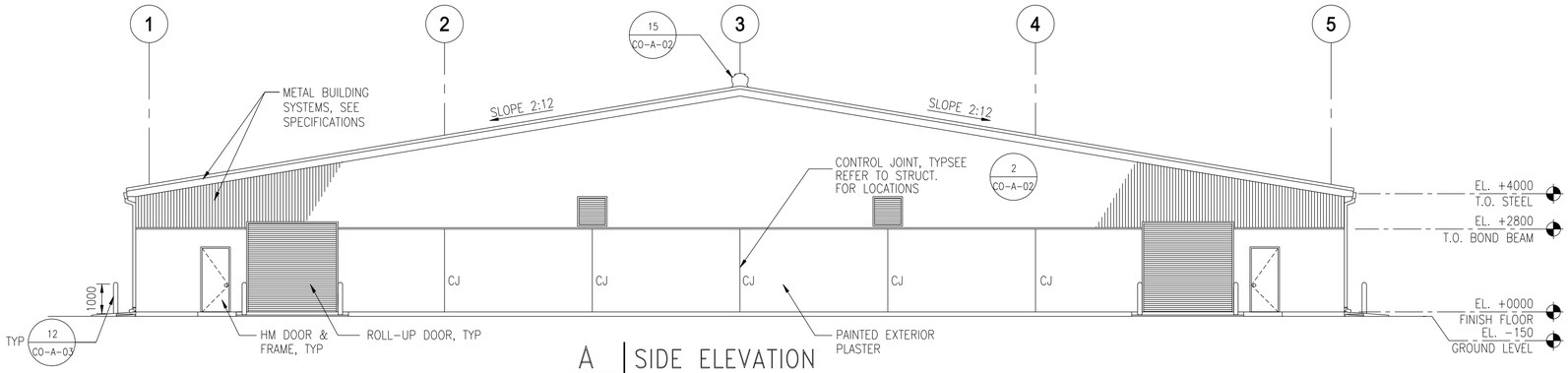

A SIDE ELEVATION

CR-A-04 SCALE: 1:100

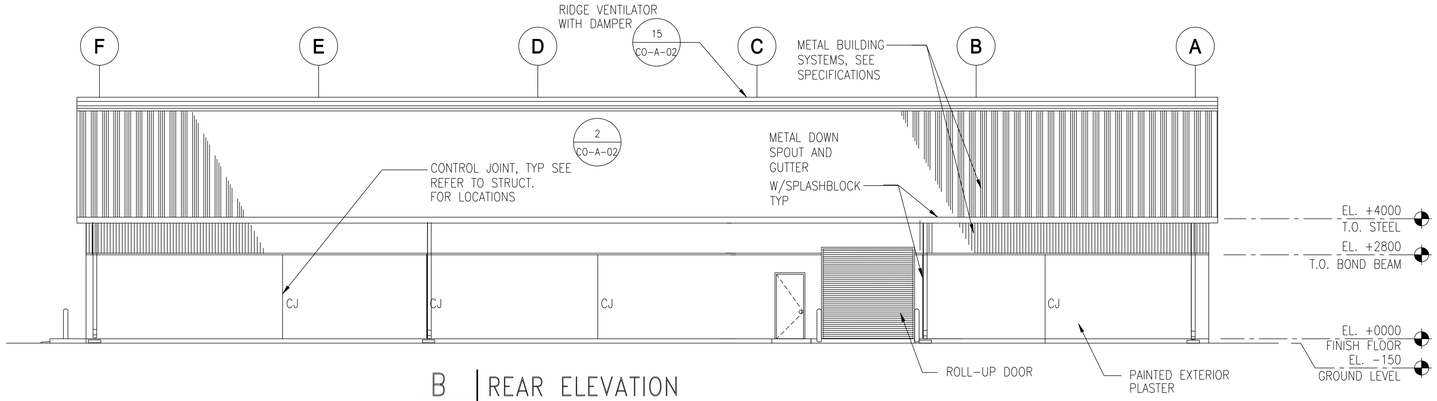

B REAR ELEVATION

CR-A-04 SCALE: 1:100

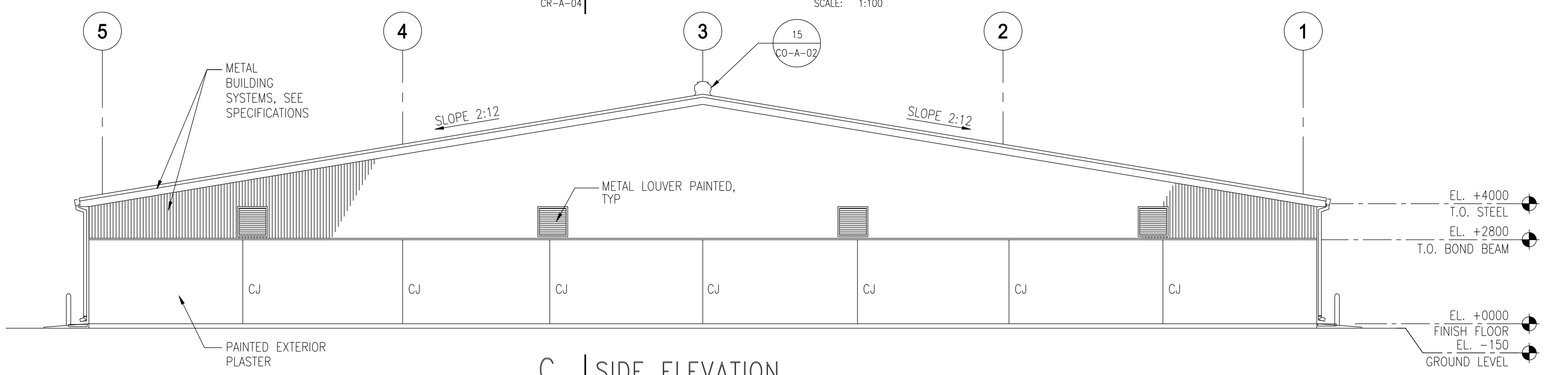

C SIDE ELEVATION

CR-A-04 SCALE: 1:100

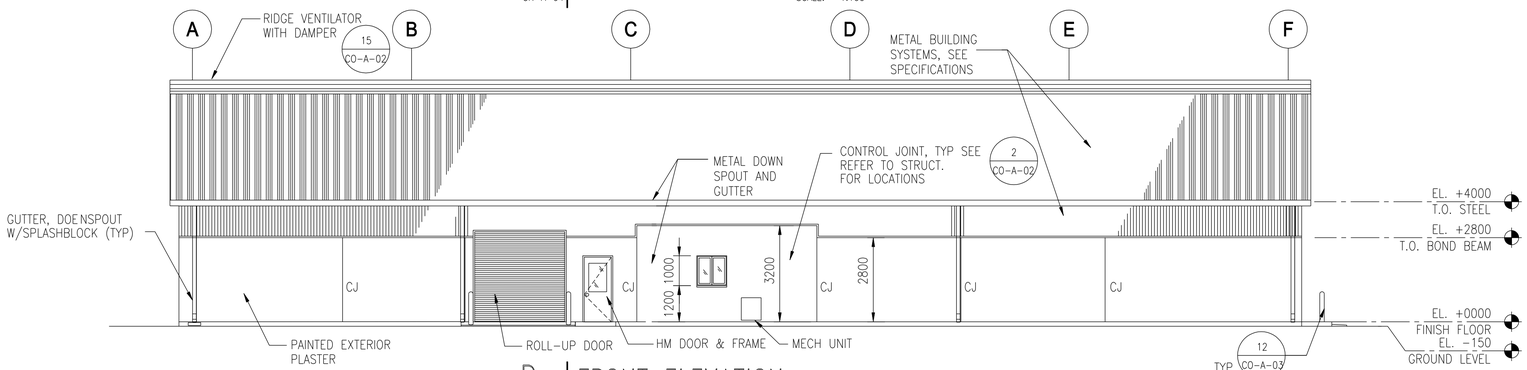

D FRONT ELEVATION

CR-A-04 SCALE: 1:100

1 0 1 2 3 4 5 6 7 8 9
1:100

SYMBOL	DESCRIPTION	DATE	APR

DESIGNED BY: YSK
DATE: 06-27-07
DWN BY: JSG
SUBMITTED BY: PHILIP J. PANELLO CHIEF, PDT FACILITIES DEV
CHK BY: PLD
FILE NO.: AF0707CR-A-04

US Army Corps of Engineers Transatlantic Programs Center

ANA REGIONAL BRIGADE
PAKTIKA, AFGHANISTAN

CENTRAL RECEIVING WAREHOUSE

EXTERIOR ELEVATIONS

SHEET REFERENCE NUMBER:
CR-A-04

$(getvar, "dwgprefix")$(getvar, "dwgname")$(edtime, O, MON DD", YYYY - HH:MMam/pm)

NOTE:

- PROVIDE R-38 BLANKET INSULATION AT UNDERSIDE OF MET. ROOFING AND R-13 BLANKET INSULATION AT BACKSIDE OF METAL WALL PANELS.

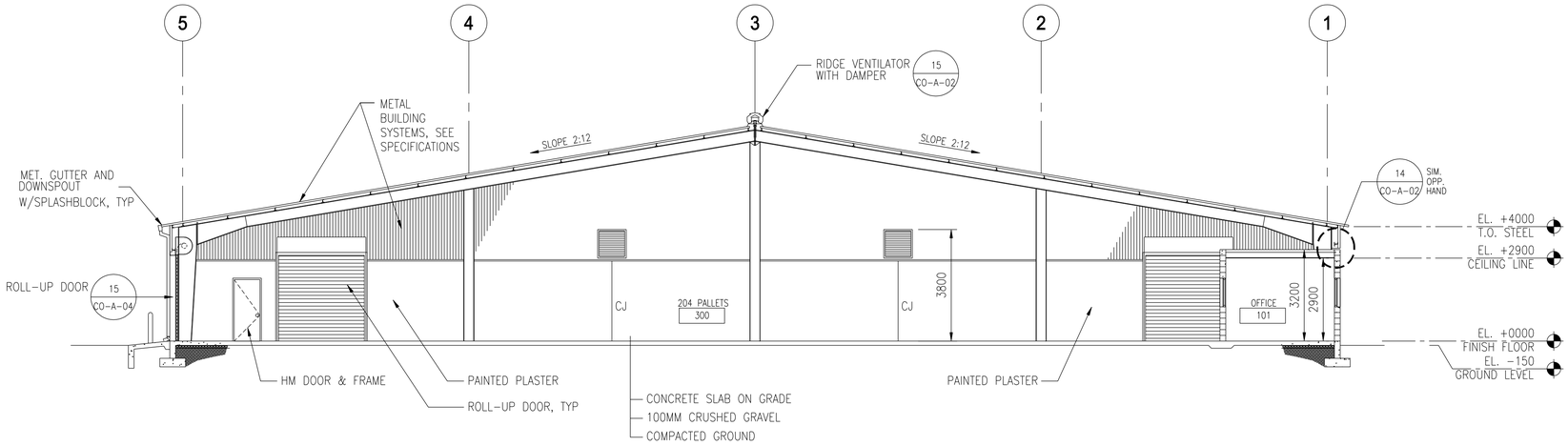

1 CROSS SECTION

CR-A-05 SCALE: 1:100

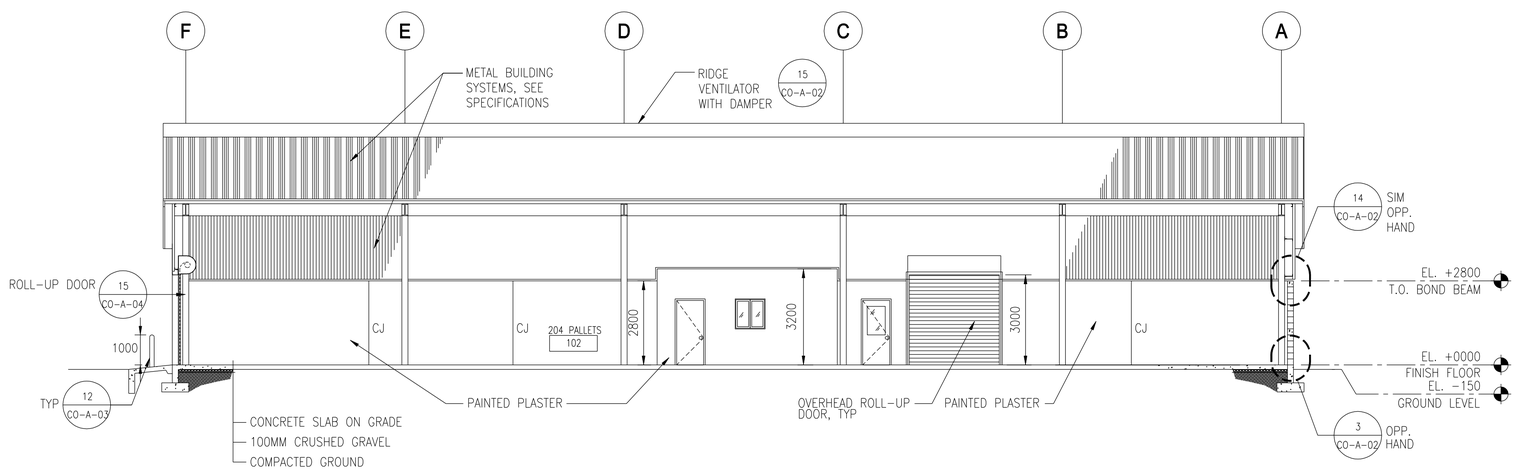

2 LONGITUDINAL SECTION

CR-A-05 SCALE: 1:100

1 0 1 2 3 4 5 6 7 8 9
1:100

SYMBOL	DESCRIPTION	DATE	APR

DESIGNED BY: YSK
DWN BY: JSG
CHK BY: PLD
DATE: 06-27-07
SUBMITTED BY: PHILIP J. PANELLO CHIEF, PDT FACILITIES DEV
FILE NO.: AF0707 CR-A-05

US Army Corps of Engineers Transatlantic Programs Center

ANA REGIONAL BRIGADE
PAKTIKA, AFGHANISTAN

CENTRAL RECEIVING WAREHOUSE

BUILDING SECTIONS

SHEET REFERENCE NUMBER:
CR-A-05

$(getvar, "dwgprefix")$(getvar, "dwgname")$(edtime, 0, MON DD"," YYYY - HMMam/pm)

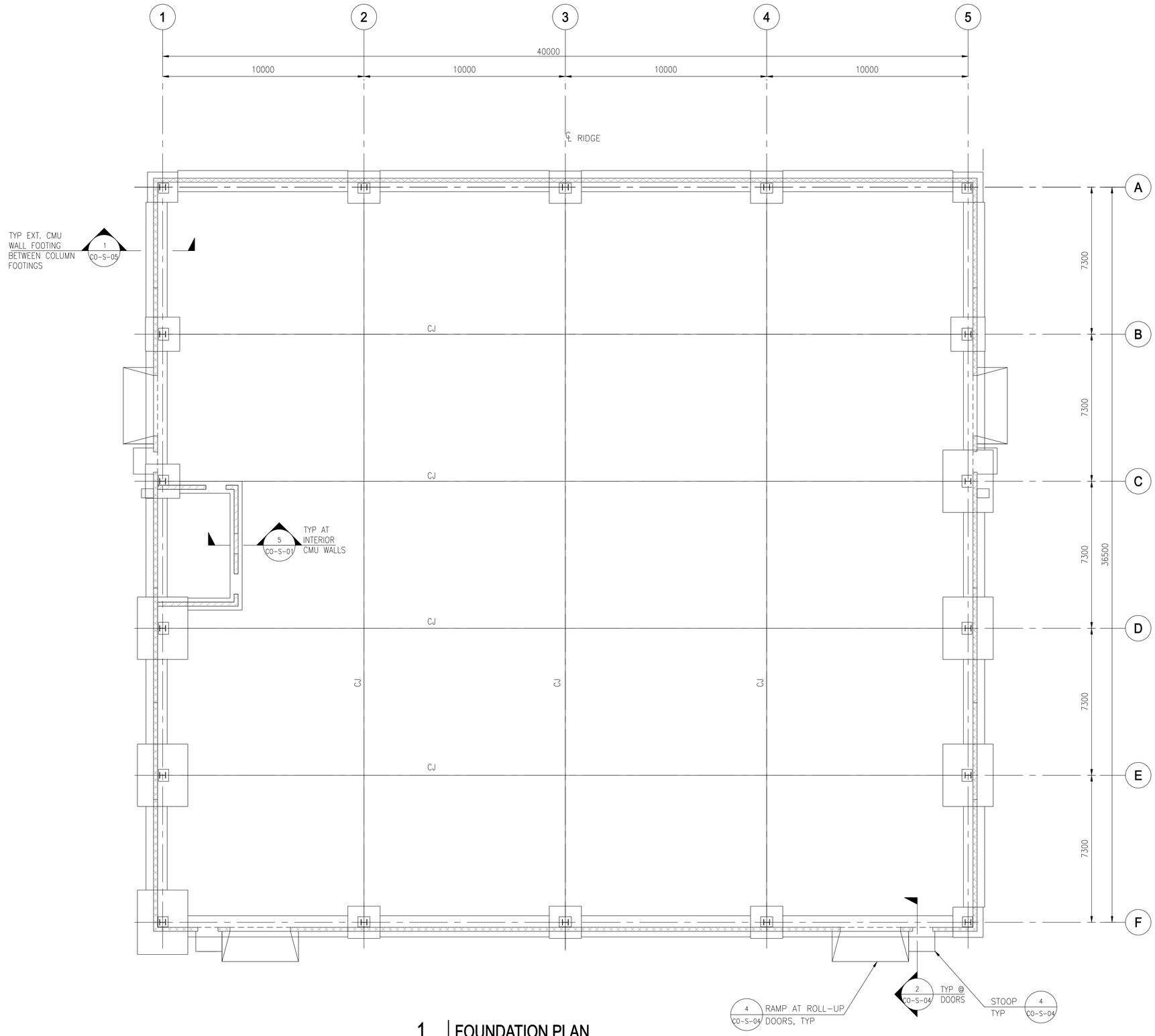

1 FOUNDATION PLAN

CR-S-01

SCALE: 1:100

NOTES:

1. OUT-TO-OUT BUILDING DIMENSIONS SHOWN ARE MINIMUMS. THE CONTRACTOR SHALL COORDINATE COLUMN (METAL BLDG), BASE PLATE (GROUT, IF ANY), ANCHOR BOLTS AND CONCRETE MAT SLAB DIMENSIONS TO SUIT "METAL BUILDING SYSTEM" SELECTED.

2. CONTRACTOR SHALL DESIGN THE FOUNDATIONS TO SUPPORT THE METAL BUILDING SYSTEM AND THE EXTERIOR 3.0 METER HIGH SKIRT WALL

3. REFER TO ARCHITECTURAL DRAWINGS FOR BUILDING SIZE AND OTHER REQUIREMENTS. PRE-ENGINEERED BUILDING SHALL CONFORM TO THE REQUIREMENTS OF THE METAL BUILDING MANUFACTURER ASSOCIATION - MBMA.

4. DESIGN LOADS (SERVICE)

LOADS:

ROOF = 98 KG/SQ. M (20 PSF)

FLOOR = 1225 KG/SQ. M (250 PSF)

FORKLIFT: AXLE LOAD CAPACITY OF 2722 Kg (6000 LBS)

WIND VELOCITY 125 KPH, EXPOSURE C AND IMPORTANCE FACTOR I=1.0.

EARTHQUAKE:

SEISMICITY: Ss=1.65g AND S_1=0.75g USE GROUP I, SITE CLASS D, IMPORTANCE FACTOR I=1.0.

5. MATERIALS:

CONCRETE: 28 MPa CYLINDER STRENGTH AT 28 DAYS

REINFORCING: ASTM A615 GRADE 60

WELDED WIRE FABRIC: ASTM A185

6. FOR CJ AND CJT DETAILS SEE GENERAL DETAILS.

FOUNDATIONS ARE DESIGNED USING AN ALLOWABLE BEARING PRESSURE OF 0.75 KG/SQ. CM (1500 PSF), AND BOTTOM OF FOOTINGS ARE PLACED AS SHOWN ON DRAWINGS. GEOTECHNICAL INVESTIGATION SHALL CONFIRM BEARING CAPACITY TO BE NO LESS THAN 0.75 KG/SQ CM. IF GEOTECHNICAL INVESTIGATION SHOWS LESS THAN 0.75 KG/SQ CM THE CONTRACTOR SHALL REDESIGN FOOTINGS BASED ON THE GEOTECHNICAL INVESTIGATION. SEE SPECIFICAITON PARAGRAPH, GEOTECHNICAL, FOUNDATION AND SURVEY.

1 0 1 2 3 4 5 6 7 8 9
1:100

SYMBOL	DESCRIPTION	DATE	APR

DESIGNED BY: TCP
DATE: 06-27-07
DWN BY: TCP
SUBMITTED BY: CHIEF, PANELIO PROJECTS DEV
CHK BY: KGO
FILE NO.: AF0707V-CR-S-01

US Army Corps of Engineers Transatlantic Programs Center

ANA REGIONAL BRIGADE
PAKTIKA, AFGHANISTAN

CENTRAL RECEIVING WAREHOUSE

FOUNDATION PLAN

SHEET REFERENCE NUMBER:
CR-S-01

$(getvar, "dwgprefix")$(getvar, "dwgname")$(edtime, 0, MON DD"," YYYY - HH:MMam/pm)

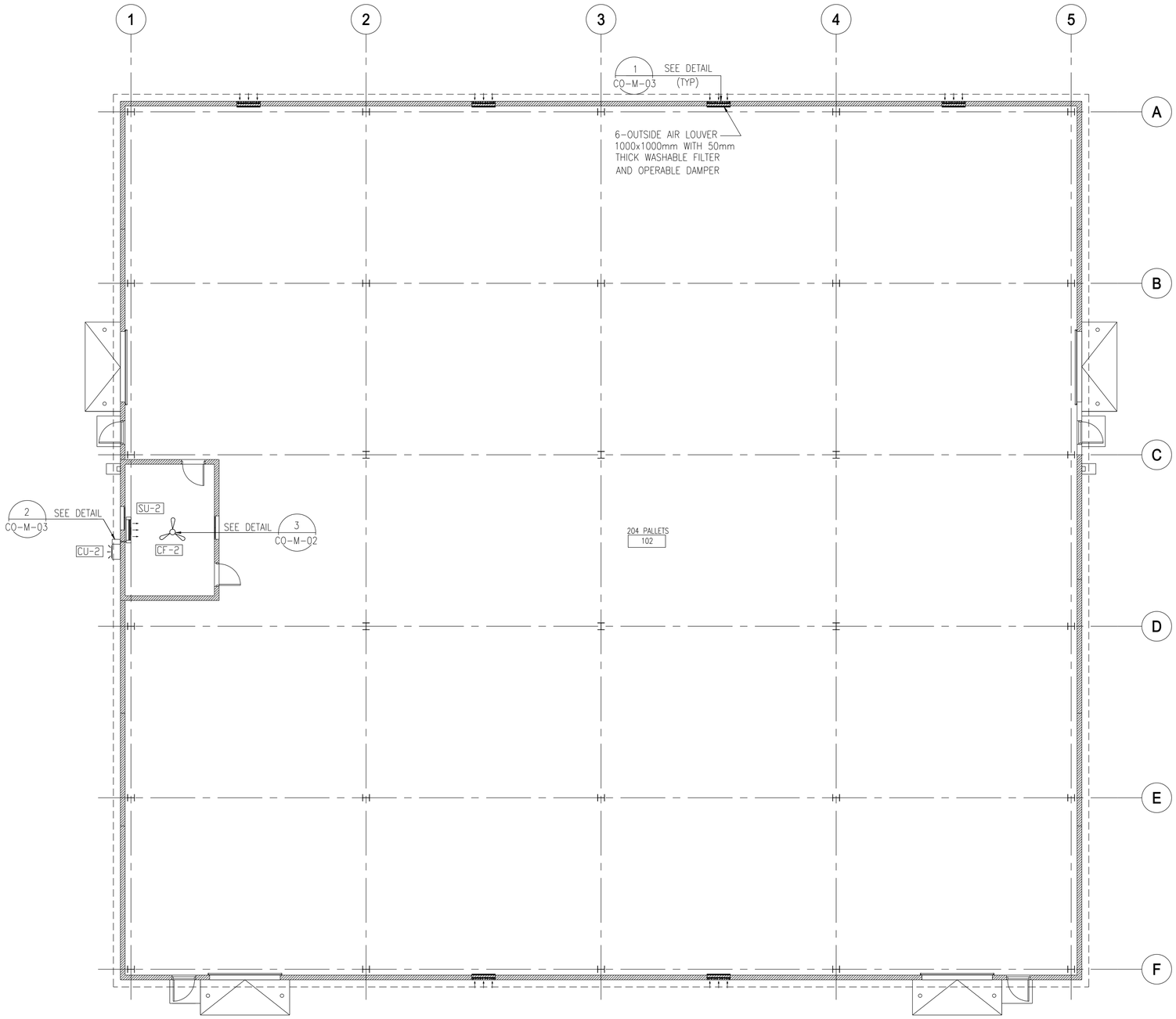

1 MECHANICAL FLOOR PLAN

CR-M-01 SCALE: 1:100

N

NOTES:

1. FOR STANDARD DETAILS SEE DWG. No. (CO-M-01, 02, 03 & 04).
2. FOR CONTROL DIAGRAMS SEE DWG. No. (CO-M-05).
3. FOR LEGEND AND ABBREVIATION SEE DWG. No. (CO-M-06).

SYMBOL	DESCRIPTION	DATE	APR

CEILING FAN SCHEDULE (CF)

UNIT NUMBER	TYPE (NOTE 1)	FAN DIAMETER	MAX WATTS	ELECTRICAL DATA			REMARKS
				VOLTS	PHASE	HERTZ	
CF-2	A	56	65	220	1	50	3-SPEED

NOTES:-

1- (A) WITHOUT LIGHT FIXTURE
2- BOTTOM OF FAN MOUNTING HEIGHT = MINIMUM 2500mm A.F.F
3- PROVIDE w/ REMOTE WALL MOUNTED, ON-OFF SWITCH LOCATED ON ELECTRICAL DWGS.

CONDENSING UNITS SCHEDULE (CU)

UNIT NUMBER	ELECTRICAL DATA				REMARKS
	KW	VOLTS	PHASE	HERTZ	
CU-2	2.0	220	1	50	--

SPLIT SYSTEM AIR CONDITIONING UNIT SCHEDULE (SU)

UNIT NUMBER	COOLING CAPACITY TOTAL	AIR QUANTITY		ELECTRICAL DATA			REMARKS
	(BTUH)	CMH	CFM	VOLTS	PHASE	HERTZ	
SU-2	18.000	885	520	220	1	50	HEAT PUMP

1 0 1 2 3 4 5 6 7 8 9
1:100

DESIGNED BY: F.MAMDOH
DATE: 06-27-07
SUBMITTED BY: R. CREWAL CHIEF, PDT BLDG SYSTEMS
DWN BY: A.LATIF
CHK BY: A.MAKRAM
FILE NO.: AF070CR-M-01

US Army Corps of Engineers Transatlantic Programs Center

ANA REGIONAL BRIGADE
PAKTIKA, AFGHANISTAN
CENTRAL RECEIVING WAREHOUSE
MECHANICAL FLOOR PLAN AND SCHEDULES

SHEET REFERENCE NUMBER:
CR-M-01

$(getvar, "dwgprefix")$(getvar, "dwgname")$(edtime, O, MON DD", " YYYY - HHMMam/pm)

CENTRAL RECEIVING PANEL PP

AIC: 25KA

100AF/50AT MCB
MLO

VOLTAGE 380/220V, 3PH, 5W, 50HZ

FEED TOP

MOUNTING FLUSH

LOCATION RM 102

DESCRIPTION	LOAD (VA) A	LOAD (VA) B	LOAD (VA) C	AMP	POLE	CKT	A B C	CKT	POLE	AMP	LOAD (VA) A	LOAD (VA) B	LOAD (VA) C	DESCRIPTION
LIGHTING RM#102	1200			20	1	1		2	1	20	2200			RECEPTACLE RM#102,101
FOR FUTURE SELF DETECTORS		1000		20	1	3		4	1	20		1200		LIGHTING RM#102
LIGHTING RM#102			1200	20	1	5		6	1	20			400	LIGHTING RM#101
LIGHTING RM#102	1200			20	1	7		8	1	20	180			TTC RECP
LIGHTING RM#102		1100		20	1	9		10	1	20		1200		RECEPTACLE RM#102
CU-1/SU-1 RM#102			4250	32	1	11		12	1	20			100	CF-2
LIGHTING RM#102	1200			20	1	13		14	1	20	1240			LIGHTING RM#102
FOR FUTURE SELF DETECTORS		1100		20	1	15		16	1	20		1100		LIGHTING RM#102
LIGHTING RM#102			1240	20	1	17		18	1	20			180	TTC RECP
SPARE				20	1	19		20						SPARE
SPARE				20	1	21		22						SPACE
LIGHTING RM#102			1200	20	1	23		24						SPACE
SUB-TOTALS=	3600	3200	6690								3620	3500	680	= SUB-TOTALS

	V A	AMPS
TOTAL PHASE A=	7220	32.4
TOTAL PHASE B=	7370	30.5
TOTAL PHASE C=	6640	33.5
TOTAL CONNECTED LOAD	21.29	KVA
DEMANDED FACTOR	1.0	
DEMANDED LOAD	21.29	KVA
20% FUTURE LOAD	4.25	KVA
TOTAL LOAD	25.55	KVA
TOTAL AMPERE	38.86	AMP

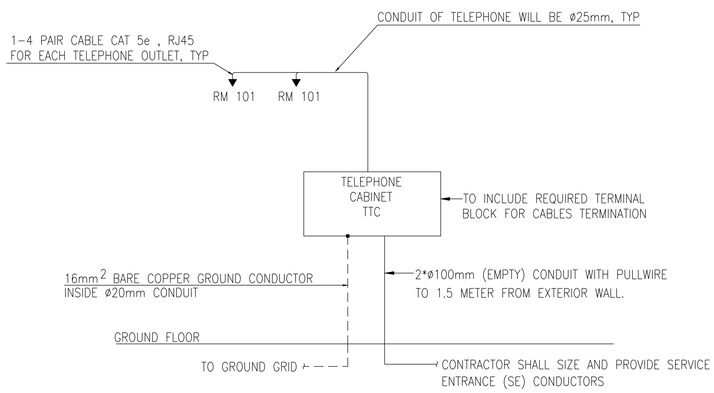

1 TELEPHONE RISER DIAGRAM

CR-E-01 SCALE: N.T.S.

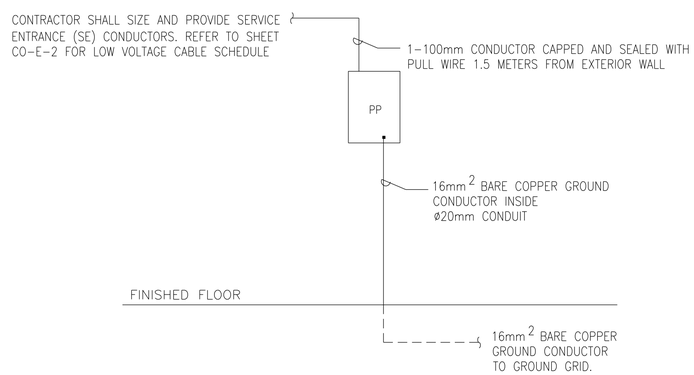

2 POWER RISER DIAGRAM

CR-E-01 SCALE: N.T.S.

NOTES:

1. SEE SHEET CO-E-01 FOR SYMBOLS ABBREVIATIONS AND GENERAL NOTES
2. SEE SHEET CO-E-02 FOR CABLE SCHEDULE.

SYMBOL	DESCRIPTION	DATE	APR

DESIGNED BY: MANAL L.
DATE: 06-27-07
DWN BY: A.FAKHRY
SUBMITTED BY: R. GREWAL
CHIEF, DIV. BLDG SYSTEMS
CHK BY: SHERINE S.
FILE NO.: AF070/CR-E-01

US Army Corps of Engineers
Transatlantic Programs Center

ANA REGIONAL BRIGADE
PAKTIKA, AFGHANISTAN

CENTRAL RECEIVING WAREHOUSE

PANEL SCHEDULE AND RISER DIAGRAMS

SHEET REFERENCE NUMBER:
CR-E-01

$(getvar, "dwgprefix")$(getvar, "dwgname")$(edtime, 0, MON DD"," YYYY - HHMMam/pm)

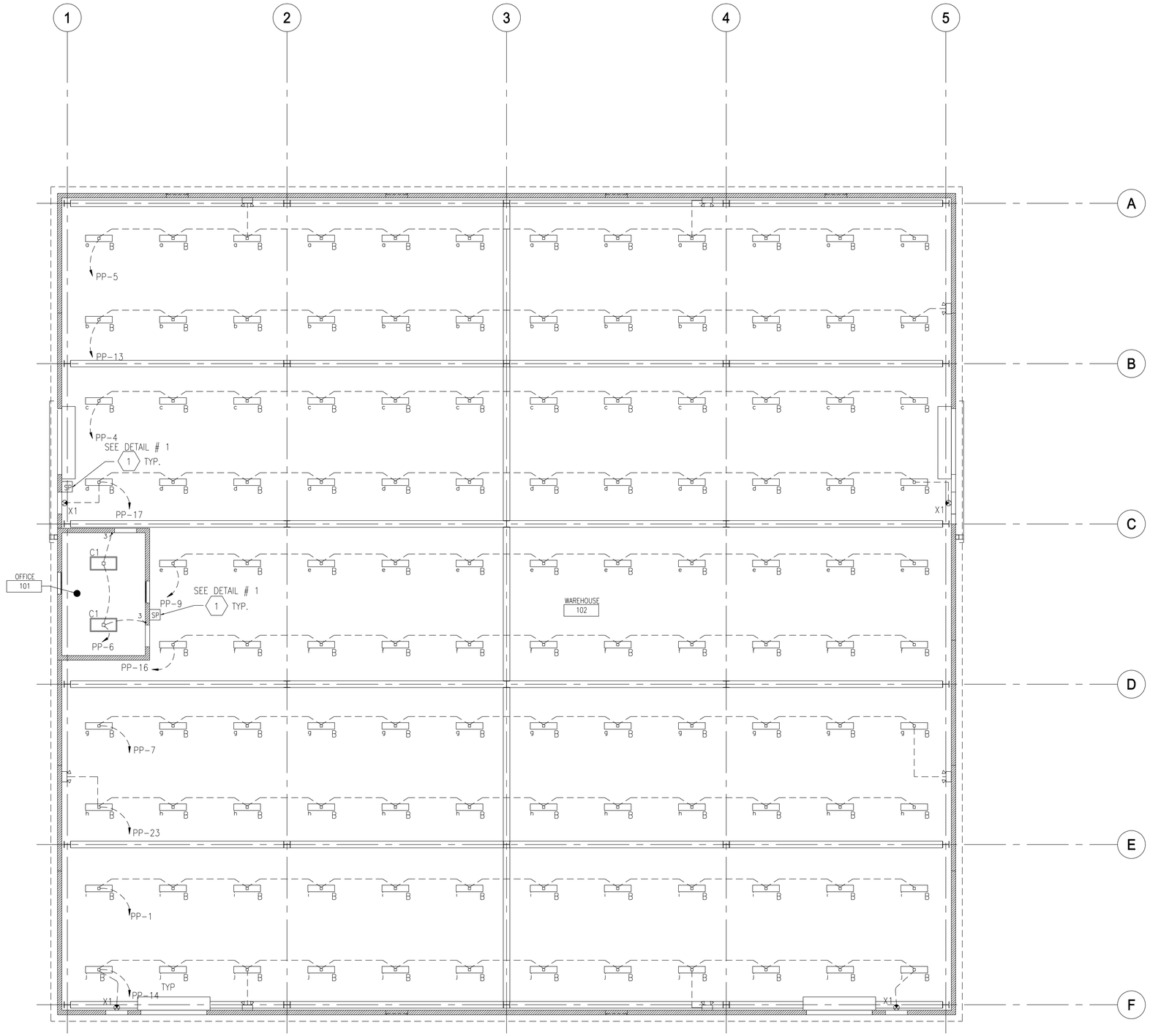

1 LIGHTING PLAN
CR-E-02 SCALE: 1:100

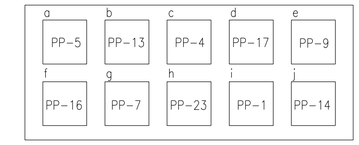

2 SWITCH PANEL DETAIL#1
CR-E-02 SCALE: N.T.S

NOTES:

1. SWITCH PANEL CONTAIN 10 SWITCHES 3 WAY,1 GANG,220V, 50HZ,20A
2. SEE SHEETS CO-E-01 AND CO-E-02 FOR SYMBOLS, ABBREVIATIONS, GENERAL NOTES AND LIGHTING FIXTURE SCHEDULE.
3. SEE SHEETS CO-E-03 TO CO-E-05 FOR STANDARD DETAILS
4. SEE SHEET CR-E-01 FOR PANEL SCHEDULE AND RISER DIAGRAMS FOR POWER SYSTEM.

1 0 1 2 3 4 5 6 7 8 9
1:100

SYMBOL	DESCRIPTION	DATE	APR

DESIGNED BY: MANAL L.
DATE: 06-27-07
DWN BY: A. FAKHRY
SUBMITTED BY: R. GREWAL
CHK BY: SHERINE S.
DIRECTOR, BLDG SYSTEMS
FILE NO.: AF070CR-E-02

US Army Corps of Engineers
Transatlantic Programs Center

ANA REGIONAL BRIGADE
PAKTIKA, AFGHANISTAN

CENTRAL RECEIVING WAREHOUSE
LIGHTING PLAN

SHEET REFERENCE NUMBER:
CR-E-02

$(getvar, "dwgprefix")$(getvar, "dwgname")$(edtime, 0, MON DD", YYYY - H:MMam/pm)

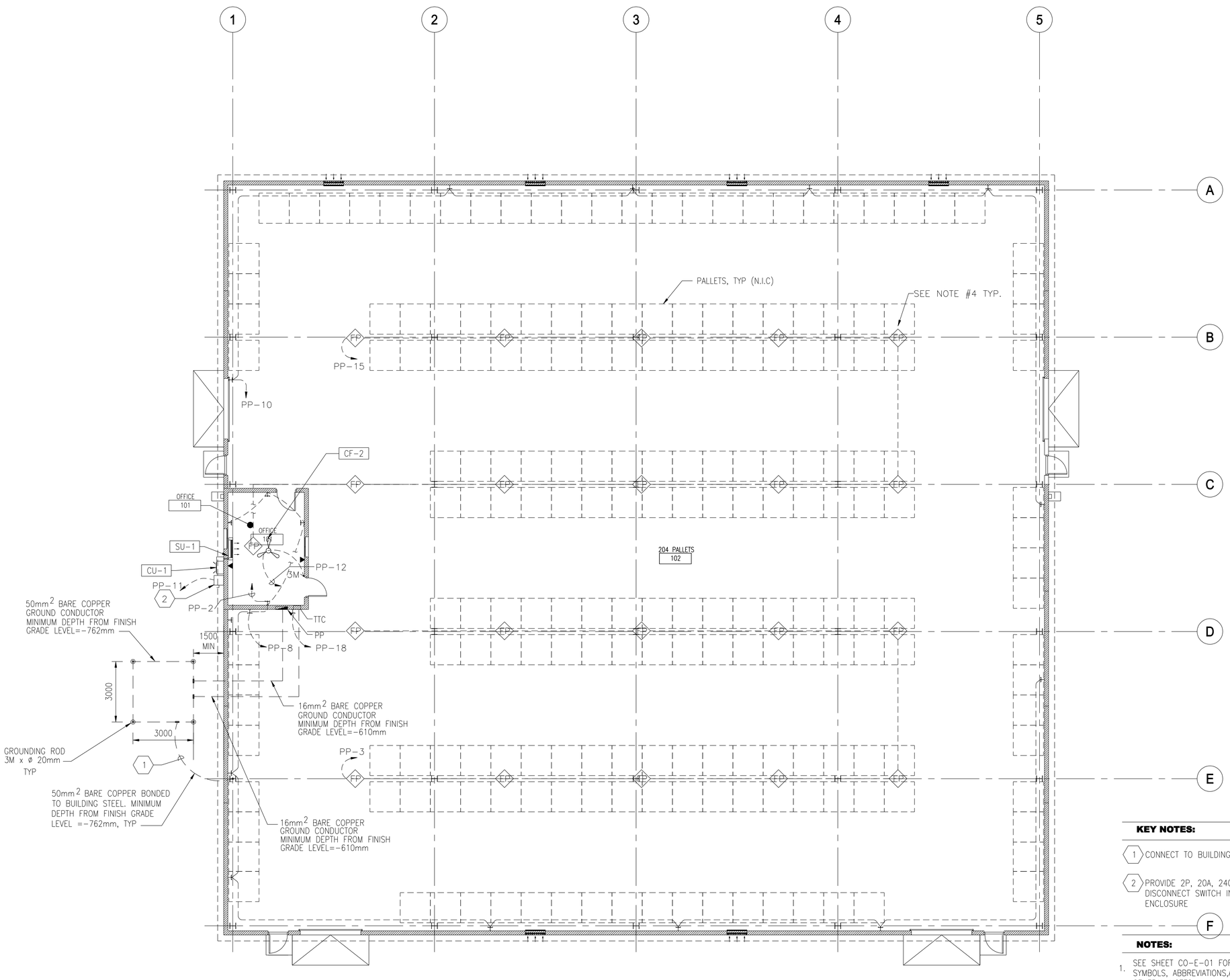

1 POWER, COMMUNICATION AND GROUNDING PLAN
CR-E-03 SCALE: 1:100

KEY NOTES:

1. CONNECT TO BUILDING STEEL COLUMN.
2. PROVIDE 2P, 20A, 240V NON FUSED DISCONNECT SWITCH IN NEMA 3R ENCLOSURE

NOTES:

1. SEE SHEET CO-E-01 FOR SYMBOLS, ABBREVIATIONS,AND GENERAL NOTES
2. SEE SHEETS CO-E-03 TO CO-E-05 FOR STANDARD DETAILS
3. SEE SHEETS CR-E-01 FOR PANEL SCHEDULE AND RISER DIAGRAMS FOR POWER AND TELEPHONE SYSTEM.
4. PROVIDE FIRE ALARM PULL BOXES, CONDUITS AND WIRING FOR FUTURE SELF SMOKE DETECTOR

1:100

SYMBOL	DESCRIPTION	DATE	APR

DESIGNED BY: MANAL L. DATE: 06-27-07
DWN BY: A. FAKHRY SUBMITTED BY: R. CRESWAL CHIEF, EP BLDG SYSTEMS
CHK BY: SHERINE S. FILE NO.: AF0707CR-E-03

US Army Corps of Engineers Transatlantic Programs Center

ANA REGIONAL BRIGADE
PAKTIKA, AFGHANISTAN
CENTRAL RECEIVING WAREHOUSE
POWER, COMMUNICATION AND GROUNDING PLAN

SHEET REFERENCE NUMBER:
CR-E-03

$(getvar, "dwgprefix")$(getvar, "dwgname")$(edtime, 0, MON DD",". YYYY - HHMMam/pm)

NOTE:

ORIENT BUILDING ON SITE SUCH THAT TOILETS ARE ON A NORTH/SOUTH ACCESS.

NOTES:

1- ALL WALLS ARE CMU UNLESS NOTED OTHERWISE.
2- ALL WALL TERMINATE AT CEILING UNLESS NOTED OTHERWISE.
3- ALL DIMENSIONS ARE TO FACE OF CMU UNLESS NOTED OTHERWISE.
4- ALL VERTICAL DIMENSIONS & LEVELS ARE FROM GROUND FLOOR FINISHED SLAB. THIS ELEVATION IS +0000.
5- SEE DRAWING CO-A-05 & CO-A-06 FOR OPENING SCHEDULES & TYPES.
6- SEE DRAWING CO-A-02, CO-A-03 & CO-A-04 FOR STANDARD DETAILS.
7- SEE CIVIL DRAWINGS FOR BUILDING COORDINATES AND FINISH FLOOR ELEVATION.
8- SEE STRUCTURAL DRAWINGS FOR LOCATION OF BUILDING CONTROL AND SEISMIC JOINTS.
9- TOTAL AREA OF BUILDING IS 1201.3 SM.

WALL SYMBOLS:

CMU WALL

CMU LOW HEIGHT WALL +/- 2000 MM WITH CERAMIC TILE FINISH

CJ — CMU CONTROL JOINT

FINISHING SCHEDULE LEGEND

FLOOR

F1	SEALED CONCRETE
F2	300MMX300MM TERRAZZO TILE
F3	CERAMIC TILE

WALL

W1	WHITE PAINTED PLASTER
W2	FACTORY FINISHED METAL SIDING
W3	150MMX150MM GLAZED CERAMIC TILES UP TO 2000MM AFF

CEILING

C1	GYPSUM BOARD – PAINTED
C2	PAINTED EXPOSED STRUCTURE
C3	MOISTURE-RESISTANT GYPSUM BOARD – PAINTED

FINISHING SCHEDULE

Room No.	Usage	Floor	Wall	Ceiling
101	TRAINING	F2	W1/W2	C2
102	OFFICE AREA	F2	W1/W2	C2
103	OFFICE	F2	W1	C1
104	OFFICE	F2	W1	C1
105	OFFICE	F2	W1	C1
106	OFFICE	F2	W1	C1
107	TOILET	F3	W1/W3	C3
108	MECHANICAL	F1	W1/W2	C2
109	JANITOR	F3	W1/W2 /W3	C3

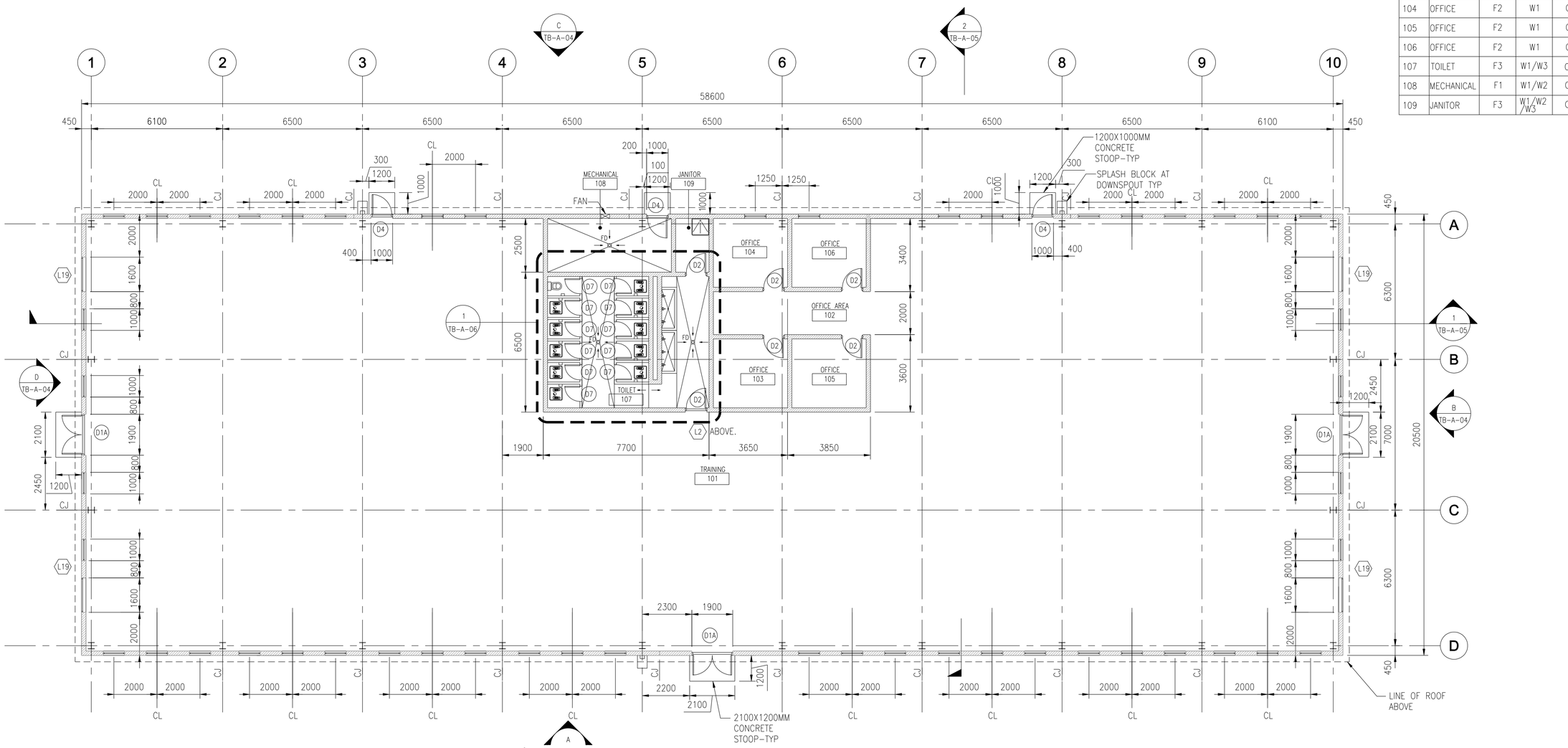

1 FLOOR PLAN
TB-A-01
SCALE: 1:100

SYMBOL	DESCRIPTION	DATE	APR

DESIGNED BY: YSK
DWN BY: JSG
CHK BY: PLD
DATE: 06-27-07
SUBMITTED BY: PAUL P. PANELLO Chief, Project Delivery Team
FILE NO.: AF0707 TB-A-01

US Army Corps of Engineers Transatlantic Programs Center

ANA REGIONAL BRIGADE
PAKTIKA, AFGHANISTAN

TRAINING BUILDING

FLOOR PLAN

SHEET REFERENCE NUMBER:
X
TB-A-01

$(getvar, "dwgprefix")$(getvar, "dwgname")$(edtime, O, MON DD",", YYYY - H:MMam/pm)

NOTES:

1- SEE SHEET TB-A-01 FOR FINISH SCHEDULE.

2- SEE SHEET CO-E-01 FOR LIGHTING LEGEND.

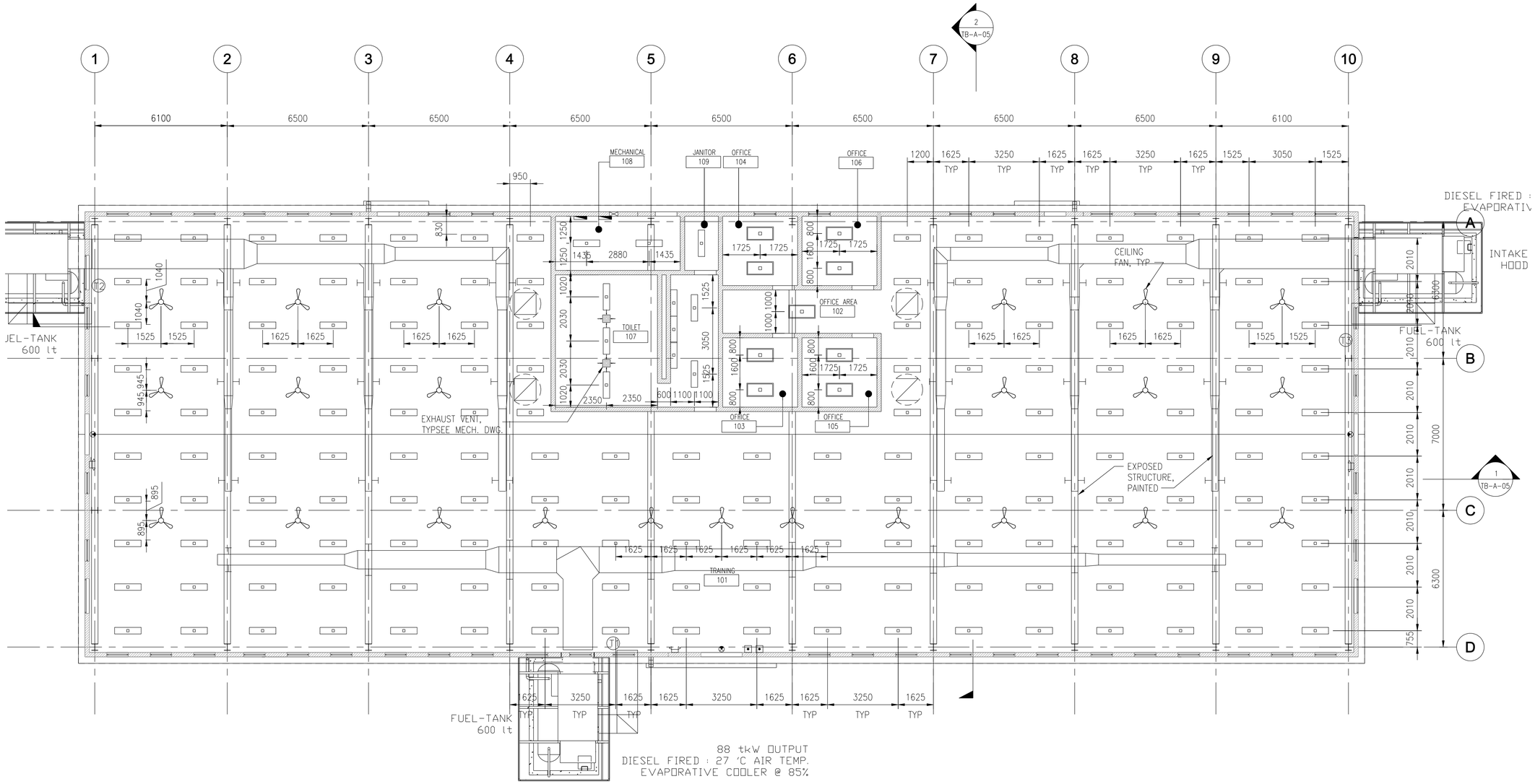

1 REFLECTED CEILING PLAN

TB-A-02

SCALE: 1:100

1 0 1 2 3 4 5 6 7 8 9

1:100

SYMBOL	DESCRIPTION	DATE	APR

DESIGNED BY: YSK
DATE: 06-27-07
DWN BY: JSG
SUBMITTED BY: CHIEF, PROJ MGT FACILITIES DEV
CHK BY: PLD
FILE NO.: AF0707 TB-A-02

US Army Corps of Engineers Transatlantic Programs Center

ANA REGIONAL BRIGADE
PAKTIKA, AFGHANISTAN

TRAINING BUILDING

REFLECTED CEILING PLAN

SHEET REFERENCE NUMBER:
X
TB-A-02

$(getvar, "dwgprefix")$(getvar, "dwgname")$(edtime, 0, MON DD"", YYYY - HHMMam/pm)

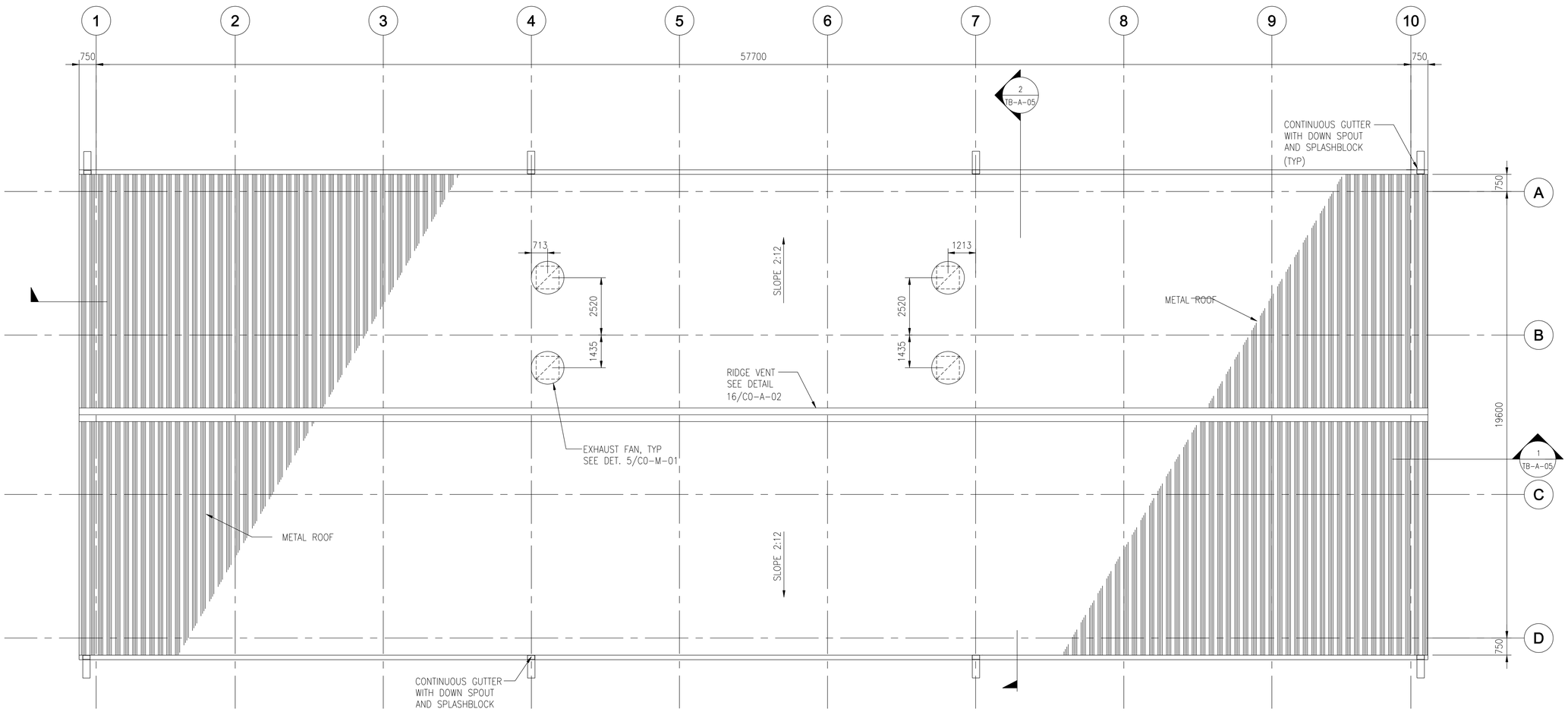

1 ROOF PLAN

TB-A-03 SCALE: 1:100

1 0 1 2 3 4 5 6 7 8 9
1:100

SYMBOL	DESCRIPTION	DATE	APR

DESIGNED BY: YSK
DATE: 06-27-07
DWN BY: JSG
SUBMITTED BY: CHIEF, DANELLO PROJECTS DEV
CHK BY: PLD
FILE NO.: AF0707TB-A-03

US Army Corps of Engineers Transatlantic Programs Center

ANA REGIONAL BRIGADE
PAKTIKA, AFGHANISTAN

TRAINING BUILDING

ROOF PLAN

SHEET REFERENCE NUMBER:
X
TB-A-03

$(getvar, "dwgprefix")$(getvar, "dwgname")$(edtime, 0, MON DD,"", YYYY - H:MMam/pm)

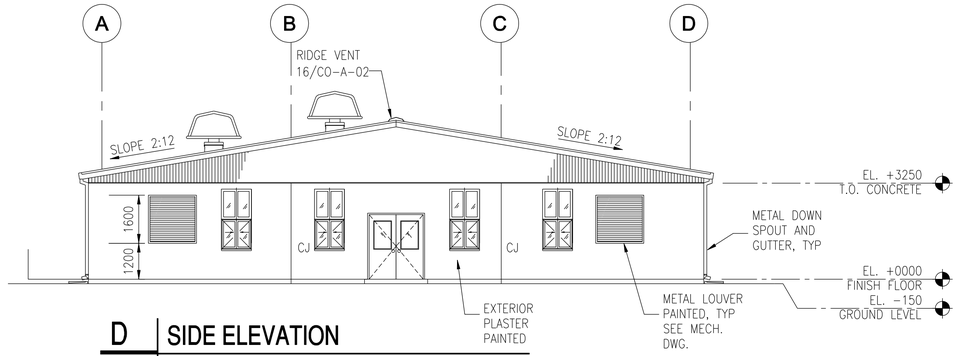

D SIDE ELEVATION

TB-A-04 SCALE: 1:100

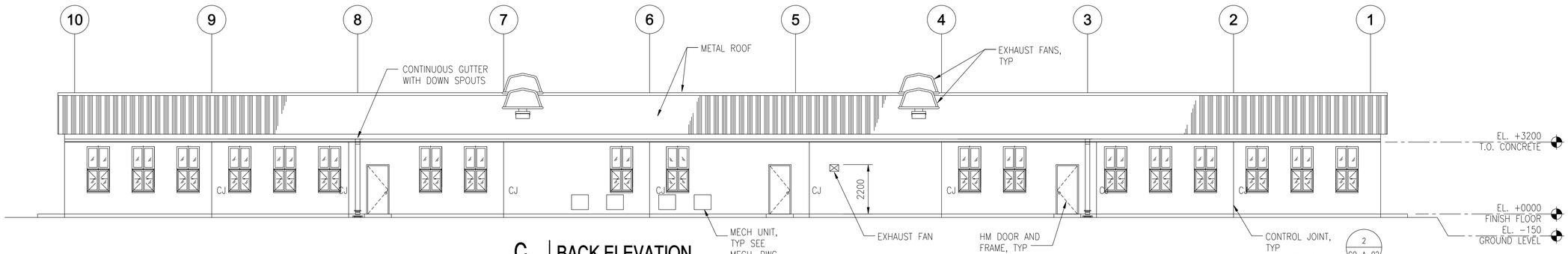

C BACK ELEVATION

TB-A-04 SCALE: 1:100

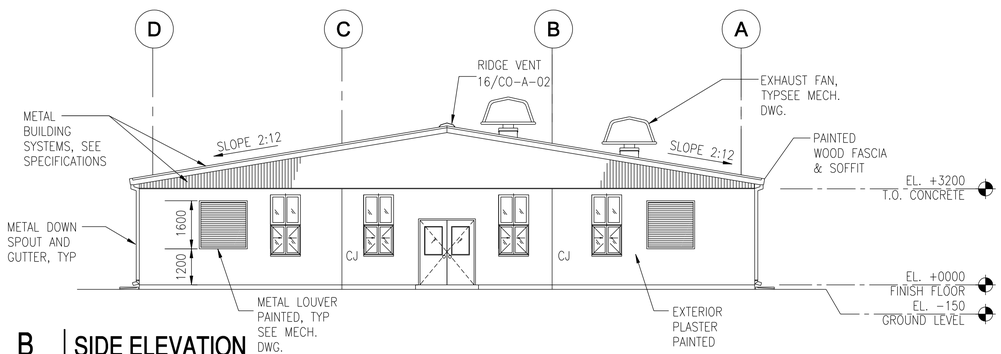

B SIDE ELEVATION

TB-A-04 SCALE: 1:100

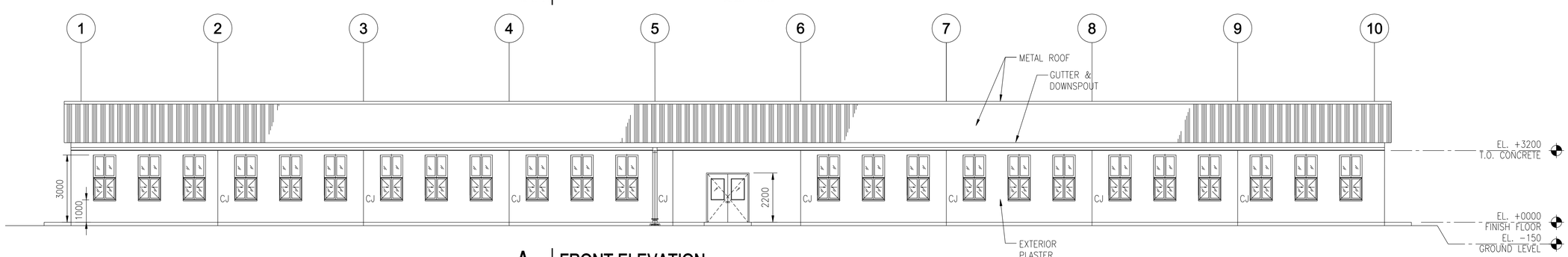

A FRONT ELEVATION

TB-A-04 SCALE: 1:100

1 0 1 2 3 4 5 6 7 8 9
1:100

SYMBOL	DESCRIPTION	DATE	APR

DESIGNED BY: YSK
DWN BY: JSG
CHK BY: PLD
DATE: 06-27-07
SUBMITTED BY: CHIEF, PROJ MANAGEMENT DIV
FILE NO.: AF0707TB-A-04

US Army Corps of Engineers
Transatlantic Programs Center

ANA REGIONAL BRIGADE
PAKTIKA, AFGHANISTAN

TRAINING BUILDING

EXTERIOR ELEVATIONS

SHEET REFERENCE NUMBER:
X
TB-A-04

$(getvar, "dwgprefix")$(getvar, "dwgname")$(edtime, 0, MON DD", YYYY - H:MMam/pm)

NOTE:

1- PROVIDE R-30 BLANKET INSULATION AT UNDERSIDE OF METAL ROOFING AND R-13 BLANKET INSULATION AT BACKSIDE OF METAL WALL PANELS.

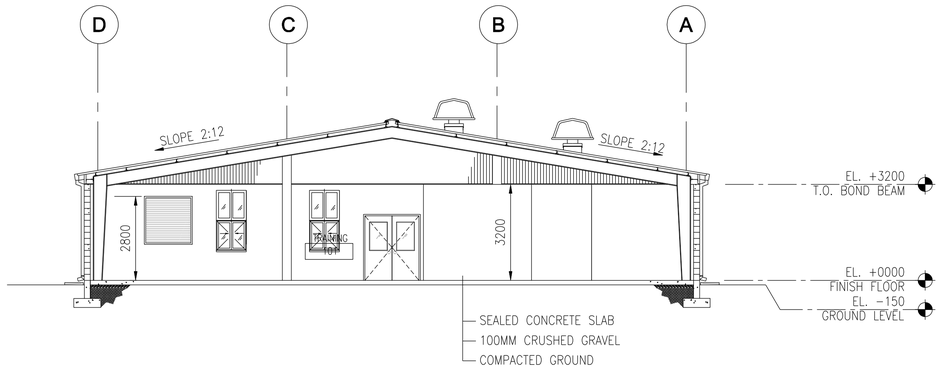

2 CROSS SECTION

TB-A-05 SCALE: 1:100

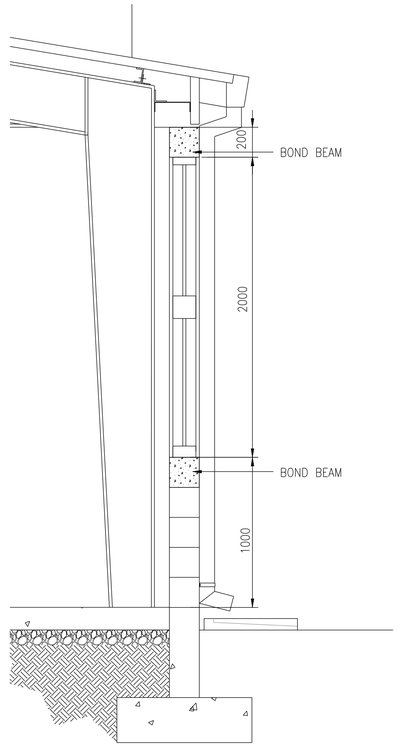

2 WALL SECTION AT WINDOW

TB-A-05 SCALE: 1:20

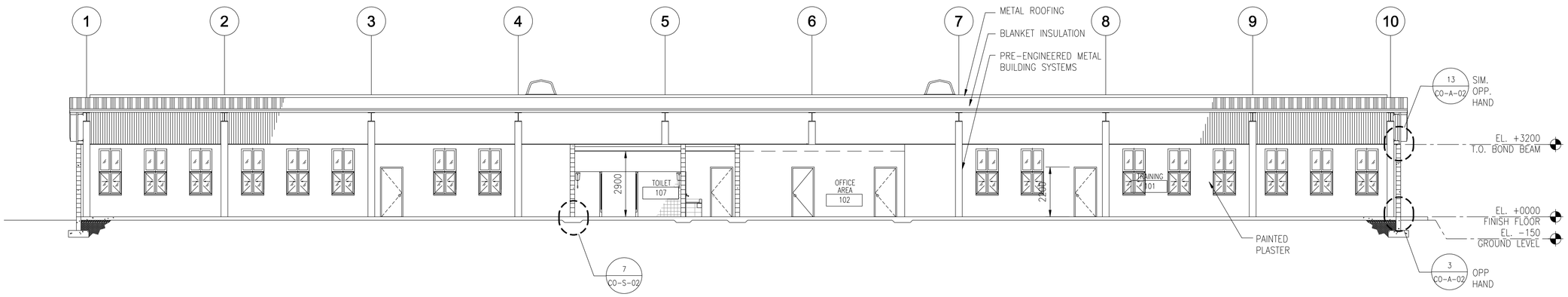

1 LONGITUDINAL SECTION

TB-A-05 SCALE: 1:100

1 0 1 2 3 4 5 6 7 8 9
1:100

SYMBOL	DESCRIPTION	DATE	APR

DESIGNED BY: YSK
DWN BY: JSG
CHK BY: PLD
DATE: 06-27-07
SUBMITTED BY: CHIEF, PANELLO PROJECTS DEV
FILE NO.: AF0707TB-A-05

US Army Corps of Engineers
Transatlantic Programs Center

ANA REGIONAL BRIGADE
PAKTIKA, AFGHANISTAN

TRAINING BUILDING

BUILDING SECTIONS

SHEET REFERENCE NUMBER:
X
TB-A-05

$(getvar, "dwgprefix")$(getvar, "dwgname")$(edtime, 0, MON DD",", YYYY - HHMMam/pm)

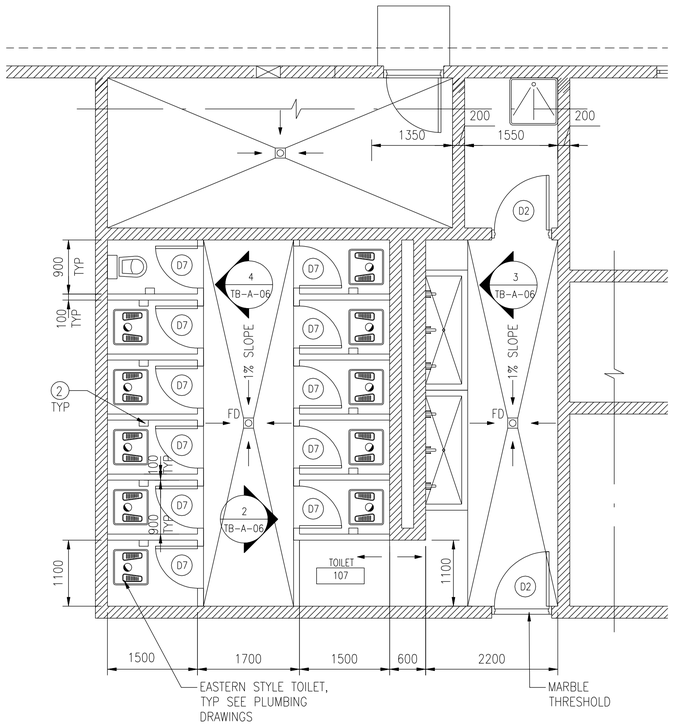

1 TOILET FLOOR PLAN

TB-A-06 SCALE: 1:50

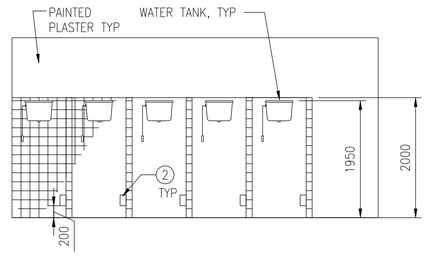

2 ELEVATION

TB-A-06 SCALE: 1:50

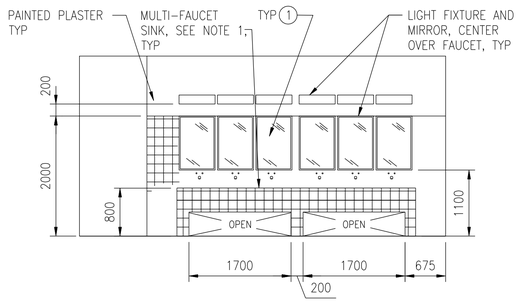

3 ELEVATION

TB-A-06 SCALE: 1:50

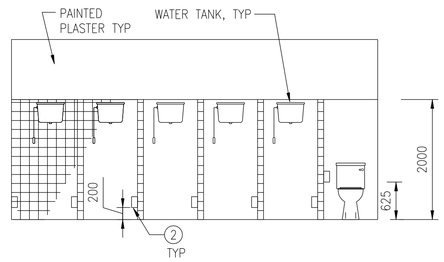

4 ELEVATION

TB-A-06 SCALE: 1:50

NOTE:

1- SEE DET. 14/CO-A-02 FOR MULTI-FAUCET SINK DETAIL.

TOILET ACCESSORY SCHEDULE

No.	Description
1	MIRROR 600X900X6MM PL.GLASS
2	SS TOILET PAPER HOLDER
3	SHOWER CURTAIN & ROD-NOT USED

SYMBOL	DESCRIPTION	DATE	APR

DESIGNED BY: YSK
DWN BY: JSG
CHK BY: PLD
DATE: 06-27-07
SUBMITTED BY: PANELIO CHIEF, PROJ FACILITIES DEV
FILE NO.: AF0707TB-A-06

US Army Corps of Engineers Transatlantic Programs Center

ANA REGIONAL BRIGADE
PAKTIKA, AFGHANISTAN

TRAINING BUILDING

TOILET FLOOR PLAN & ELEVATIONS

SHEET REFERENCE NUMBER:
X
TB-A-06

1 0 1 2 3 4
1:50

$(getvar, "dwgprefix")$(getvar, "dwgname")$(edtime, O, MON DD", " YYYY - H:MMam/pm)

FOUNDATIONS ARE DESIGNED USING AN ALLOWABLE BEARING PRESSURE OF 0.50 KG/SQ. CM (1000 PSF), AND BOTTOM OF FOOTINGS ARE PLACED AS SHOWN ON DRAWINGS. GEOTECHNICAL INVESTIGATION SHALL CONFIRM BEARING CAPACITY TO BE NO LESS THAN 0.50 KG/SQ CM. IF GEOTECHNICAL INVESTIGATION SHOWS LESS THAN 0.50 KG/SQ CM THE CONTRACTOR SHALL REDESIGN FOOTINGS BASED ON THE GEOTECHNICAL INVESTIGATION. SEE SPECIFICAITON 01015 PARAGRAPH, GEOTECHNICAL, FOUNDATION AND SURVEY.

NOTES:

1. OUT-TO-OUT BUILDING DIMENSIONS SHOWN ARE MINIMUMS. THE CONTRACTOR SHALL COORDINATE COLUMN (METAL BLDG), BASE PLATE (GROUT, IF ANY), ANCHOR BOLTS AND CONCRETE MAT SLAB DIMENSIONS TO SUIT "METAL BUILDING SYSTEM" SELECTED.

2. CONTRACTOR SHALL DESIGN THE FOUNDATIONS TO SUPPORT THE METAL BUILDING SYSTEM AND THE EXTERIOR 3.0 METER HIGH SKIRT WALL.

3. REFER TO ARCHITECTURAL DRAWINGS FOR BUILDING SIZE AND OTHER REQUIREMENTS. PRE-ENGINEERED BUILDING SHALL CONFORM TO THE REQUIREMENTS OF THE METAL BUILDING MANUFACTURER ASSOCIATION - MBMA.

4. DESIGN LOADS (SERVICE)

LOADS:

ROOF - 98 KG/SQ. M (250 PSF)

FLOOR - 1225 KG/SQ. M (250 PSF)

FORKLIFT: AXLE LOAD CAPACITY OF ~~2722 Kg~~ (6000 LBS)

WIND VELOCITY 125 KPH, EXPOSURE C AND IMPORTANCE FACTOR I=1.0

EARTHQUAKE:
SEISMICITY: Ss=1.65g AND S =0.75g
USE GROUP I, SITE CLASS D, 1
IMPORTANCE FACTOR I=1.0

5. MATERIALS:

CONCRETE: 28 MPa CYLINDER STRENGTH AT 28 DAYS

REINFORCING: ASTM A615 GRADE 60

WELDED WIRE FABRIC: ASTM A185

6. FOR CJ AND CJT DETAILS SEE GENERAL DETAILS.

7. ALLOWABLE SOIL BEARING CAPACITY 4900 KSM (1000 PSF).

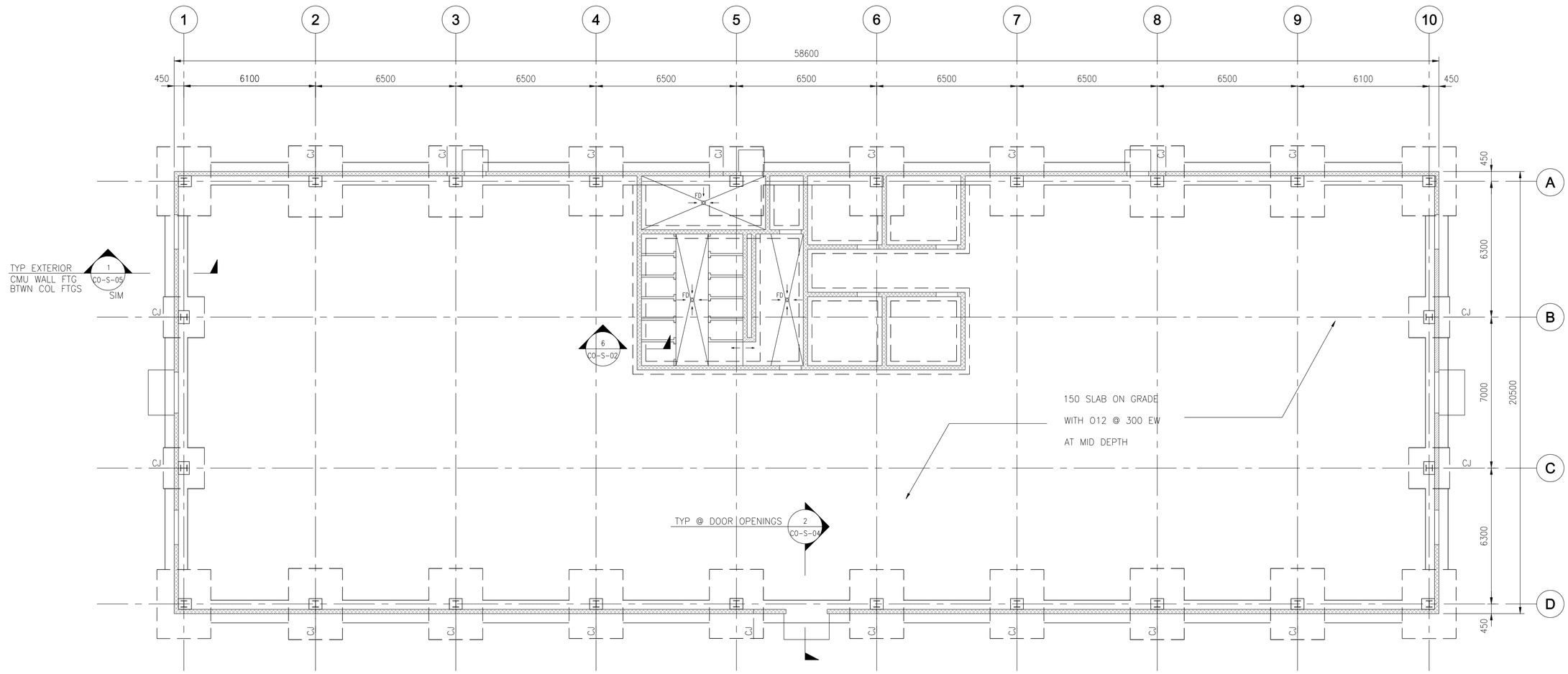

1 FOUNDATION PLAN
TB-A-01
SCALE: 1:100

1 0 1 2 3 4 5 6 7 8 9
1:100

SYMBOL	DESCRIPTION	DATE	APR

DESIGNED BY: TCP
DWN BY: YCP
CHK BY: KGO
DATE: 06-27-07
SUBMITTED BY: CHIEF, PROJ DEV PANEL IQ ARCHITECTS
FILE NO.: AF0707X-TB-S-01

US Army Corps of Engineers Transatlantic Programs Center

ANA REGIONAL BRIGADE
PAKTIKA, AFGHANISTAN
TRAINING BUILDING
FOUNDATION PLAN

SHEET REFERENCE NUMBER:
X
TB-S-01

$(getvar, "dwgprefix")$(getvar, "dwgname")$(edtime, 0, MON DD", YYYY - H:MMam/pm)

NOTES:

1. FOR STANDARD DETAILS SEE DWG. No. (CO-M-01, 02, 03 & 04).
2. FOR CONTROL DIAGRAMS SEE DWG. No. (TB-M-03).
3. FOR LEGEND AND ABBREVIATION SEE DWG. No. (CO-M-06).
4. HCU-TB-01 IS INTERLOCKED WITH EF-TB-01 AND EF-TB-04.
   HCU-TB-02 IS INTERLOCKED WITH EF-TB-02.
   HCU-TB-03IS INTERLOCKED WITH EF-TB-03.

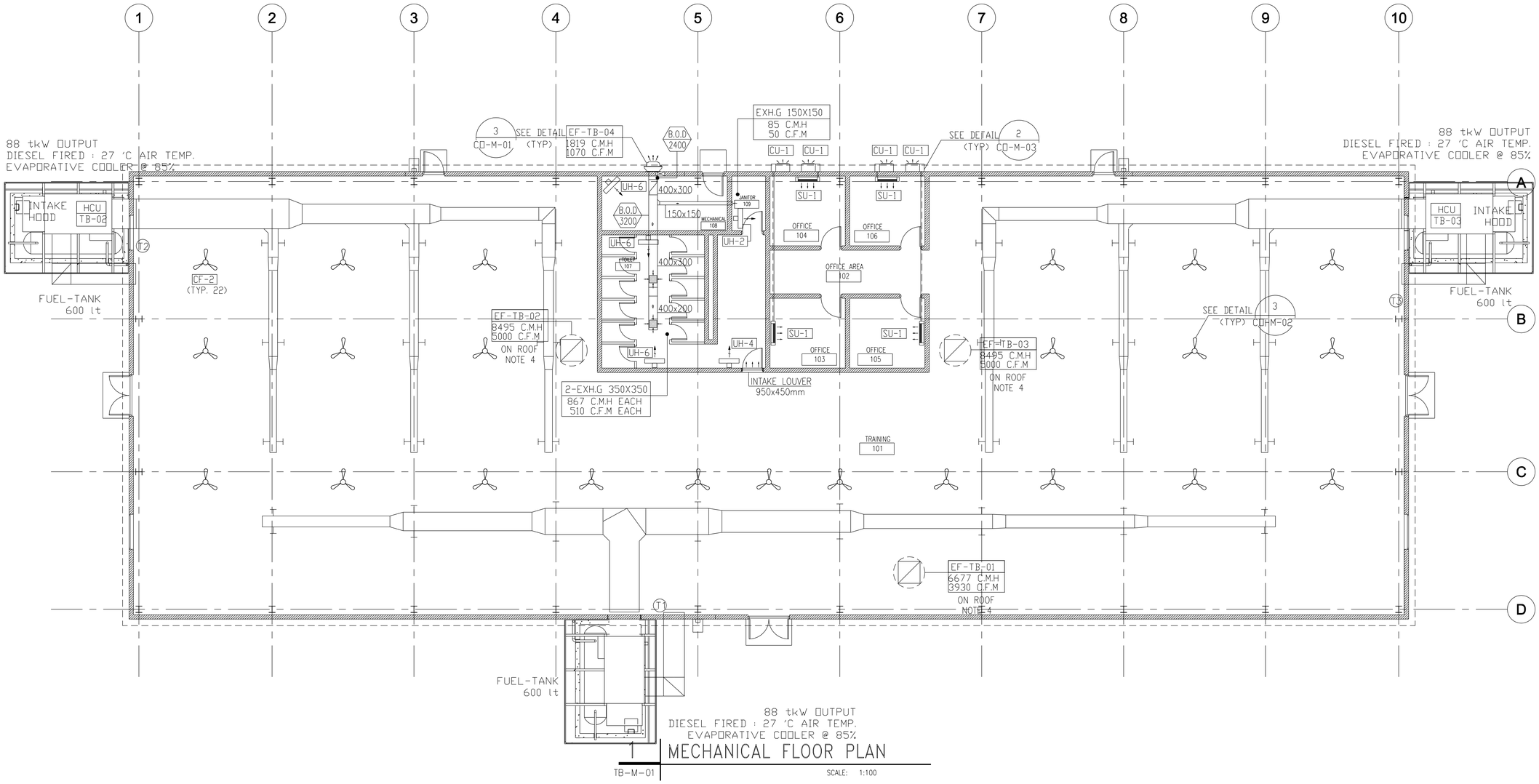

88 tkW OUTPUT
DIESEL FIRED : 27 'C AIR TEMP.
EVAPORATIVE COOLER @ 85%

MECHANICAL FLOOR PLAN

TB-M-01

SCALE: 1:100

1:100

SYMBOL	DESCRIPTION	DATE	APR

DESIGNED BY: F.MAMDOH
DATE: 06-27-07
DWN BY: A.LAKIR
SUBMITTED BY: R. GREWAL CHIEF, PROJ. BLDG SYSTEMS
CHK BY: A.MAKRAM
FILE NO.: AF07071TB-M-01

US Army Corps of Engineers Transatlantic Programs Center

ANA REGIONAL BRIGADE
PAKTIKA, AFGHANISTAN

TRAINING BUILDING

MECHANICAL FLOOR PLAN

SHEET REFERENCE NUMBER:
X
TB-M-01

$(getvar, "dwgprefix")$(getvar, "dwgname")$(edtime, 0, MON DD"", YYYY - H:MMam/pm)

(PACKAGED) HEATING-COOLING UNIT (HCU)

UNIT NUMBER	OUTSIDE AIR COOLING CMH	OUTSIDE AIR HEATING CMH	TOTAL CMH	FAN SECTION EXTERNAL SP (MM-WG)	FAN SECTION KW	EVAPORATIVE WATER COOLER PUMP NOM. WATTS	PUMP BLEED-OFF (LPM)	OUTDOOR AIR DB (DEG C)	OUTDOOR AIR WB (DEG C)	SUPP. AIR DB (DEG C)	ADIABATIC EFF. (%)	FILTER SECTION FACE VELOCITY MPS	FILTER EFF. %	AIR PRESSURE DROP (MM-WG) INT	AIR PRESSURE DROP (MM-WG) FNL	DIESEL HEATER SECTION CAPACITY KW	TEMP. RISE °C	EFF. %	ELECTRICAL DATA VOLTS	PHASE	HERTZ	CONTROL DIAGRAM	INTERLOCKED EQUIPMENT	REMARKS
HCU-TB-01	8,275	3,190	8,275	11.0	3.73	80	1.26	36.1	16.7	11.7	85	7.39	30	58.4	1.26	61.4	25	85	380	3	50	T-1	EF-TB-01 EF-TB-04	NOTES 1 & 2
HCU-TB-02	8,275	3,190	8,275	11.3	3.73	80	1.26	36.1	16.7	11.7	85	7.39	30	58.4	1.26	61.4	25	85	380	3	50	T-1	EF-TB-02	NOTES 1 & 2
HCU-TB-02	8,275	3,190	8,275	11.3	3.73	80	1.26	36.1	16.7	11.7	85	7.39	30	58.4	1.26	61.4	25	85	380	3	50	T-1	EF-TB-03	NOTES 1 & 2

1. MANUFACTURER SHALL PROVIDE NECESSARY TRANSFORMERS ON ALL UNITS TO MEET ELECTRICAL CONTROL REQUIREMENTS.
2. PROVIDE INTAKE HOOD WITH BIRD SCREEN AND 50 MM WASHABLE FILTER.

EXHAUST FAN SCHEDULE (EF)

UNIT NUMBER	SERVICE	TYPE	AIR QUANTITY CMH	AIR QUANTITY CFM	MINIMUM WHEEL DIAMETER MM	MINIMUM WHEEL DIAMETER INCHES	FAN RPM	STATIC PRESSURE mmH20	STATIC PRESSURE IN W.G.	ELECTRICAL DATA H.P.	ELECTRICAL DATA VOLTS	ELECTRICAL DATA PHASE	ELECTRICAL DATA HERTZ	TEMP CONTROL DIAGRAM	INTERLOCK WITH	DRIVE TYPE	REMARKS
EF-TB-01	VENT	R-CTFG-GP	6677	3930	-	-	750	12.7	0.5	1	380	3	50	E-2	HCU-TB-01	DIRECT	NOTES 1
EF-TB-02	VENT	R-CTFG-GP	9745	5750	-	-	750	12.7	0.5	1-1/2	380	3	50	E-2	HCU-TB-02	DIRECT	NOTES 1
EF-TB-03	VENT	R-CTFG-GP	9745	5750	-	-	750	12.7	0.5	1-1/2	380	3	50	E-2	HCU-TB-03	DIRECT	NOTES 1
EF-TB-04	TOILET	W-CTFG-GP	1815	1070	-	-	1545	12.7	0.5	1/3	220	1	50	E-4	HCU-TB-01	DIRECT	NOTES 1, 2

MANUFACTURER SHALL PROVIDE NECESSARY TRANSFORMERS ON ALL UNITS TO MEET ELECTRICAL REQUIREMENT.

NOTE 1. SUPPLIED WITH BACKDRAFT DAMPER
NOTE 2. ALL EXHAUST FANS WITH SINGLE PHASE POWER ARE TO BE PROVIDED w/ A FACTORY MOUNTED DISCONNECT SWITCH.

FAN SCHEDULE TYPE - LEGEND
(REF. EXHAUST AND SUPPLY FAN SCHEDULES)
R-CTFG-GP

R =ROOF
W =WALL
IL =INLINE
CL =CEILING

GP = GENERAL PURPOSE
EP = EXPLOSION PROOF
DB = DOWN BLAST
UB = UP BLAST
UT = UTILITY SET

CTFG = CENTRIFUGAL
PROP = PROPELLER
TUBA = TUBE AXIAL

CEILING FAN SCHEDULE (CF)

UNIT NUMBER	TYPE (NOTE 1)	FAN DIAMETER	MAX WATTS	ELECTRICAL DATA VOLTS	ELECTRICAL DATA PHASE	ELECTRICAL DATA HERTZ	REMARKS
CF-2	A	1422 mm (56 in)	65	220	1	50	3-SPEED

NOTES:-

1- (A) WITHOUT LIGHT FIXTURE
2- BOTTOM OF FAN MOUNTING HEIGHT = MINIMUM 2500mm A.F.F
3- PROVIDE WITH REMOTE WALL MOUNTED, ON-OFF SWITCH LOCATED ON ELECTRICAL DRAWINGS.

ELECTRIC UNIT HEATER SCHEDULE (UH)

UNIT NUMBER	QTY.	HEATING CAPACITY TOTAL (KW)	HEATING CAPACITY TOTAL (BTUH)	ELECTRICAL DATA VOLTS	ELECTRICAL DATA PHASE	ELECTRICAL DATA HERTZ	REMARKS
UH-2	1	2.0	6828	220	1	50	WALL SUSPENDED
UH-4	1	4.0	13656	380	3	50	WALL SUSPENDED
UH-6	3	6.0	20484	380	3	50	WALL SUSPENDED

FROM DESIGN PERSPECTIVE 7.5 KW UNIT HEATER CAN BE RECALLED AS A SUBSTITUTE FOR 6 KW UNIT HEATER.
MANUFACTURER SHALL PROVIDE BUILT-IN THERMOSTAT/ON-OFF SWITCH WITH OVERLOAD PROTECTION.

SPLIT SYSTEM AIR CONDITIONING UNIT SCHEDULE (SU)

UNIT NUMBER	COOLING CAPACITY TOTAL (BTUH)	AIR QUANTITY CMH	AIR QUANTITY CFM	ELECTRICAL DATA VOLTS	ELECTRICAL DATA PHASE	ELECTRICAL DATA HERTZ	REMARKS
SU-1	12.000	425	250	220	1	50	HEAT PUMP

CONDENSING UNITS SCHEDULE (CU)

UNIT NUMBER	ELECTRICAL DATA KW	ELECTRICAL DATA VOLTS	ELECTRICAL DATA PHASE	ELECTRICAL DATA HERTZ	REMARKS
CU-1	1.5	220	1	50	--

SYMBOL	DESCRIPTION	DATE	APR

DESIGNED BY: F.MAMDOH
DATE: 06-27-07
DWN BY: A.LAMR
CHK BY: A.MAKRAM
SUBMITTED BY: R. CREWAL CHIEF, PDT BLDG SYSTEMS
FILE NO.: AF0707TB-M-02

US Army Corps of Engineers Transatlantic Programs Center

ANA REGIONAL BRIGADE
PAKTIKA, AFGHANISTAN
TRAINING BUILDING
SCHEDULES

SHEET REFERENCE NUMBER:
X
TB-M-02

$(getvar, "dwgprefix")$(getvar, "dwgname")$(edtime, O, MON DD", " YYYY - HHMMam/pm)

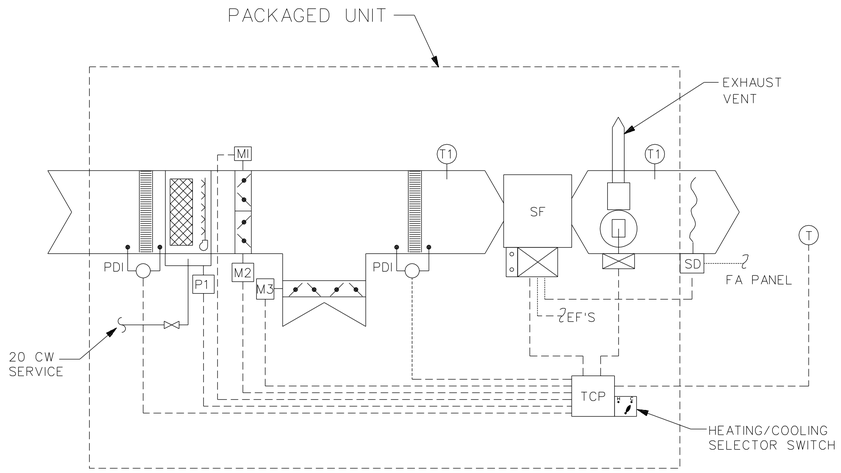

SET POINT

HTG.	CLG.
21°C	1. 23°C 2. 25°C

TEMPERATURE CONTROL DIAGRAM, T-1

(HCU-TB-01/02/03)

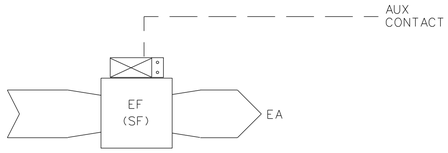

TEMPERATURE CONTROL DIAGRAM E-1

E-1 SEQUENCE OF OPERATION

START-UP
THE EXHAUST (SUPPLY) FAN SHALL BE STARTED MANUALLY BY PLACING THE HAND-OFF-AUTO (H-O-A) SWITCH IN THE HAND POSITION. IN THE AUTO POSITION, AN AUXILIARY CONTACT IN THE INTERLOCKED EQUIPMENT MOTOR STARTER SHALL START THE FAN.

PACKAGED HEATING-COOLING UNIT -SEQUENCE OF OPERATION

START-UP
THE SUPPLY FAN (SF) SHALL BE STARTED MANUALLY BY PLACING THE HAND-OFF-AUTO SWITCH AT THE CONTROL PANEL IN THE HAND POSITION. IN THE AUTO POSITION A PROGRAMMABLE TIME CLOCK SHALL START/STOP THE FAN. DURING THE OCCUPIED TIME, THE FAN SHALL OPERATE CONTINUOUSLY.

OPERATING MODES
HEATING OR COOLING MODE SELECTION SHALL BE CONTROLLED OFF A HEATING-COOLING SELECTION SWITCH ON THE CONTROL PANEL. THE UNIT SHALL OPERATE AS A 100% OA COOLING UNIT BY PLACING THE MODE SWITCH IN THE COOLING MODE. IN THE HEATING MODE THE UNIT SHALL PROVIDE MINIMUM FRESH AIR VENTILATION AND EXHAUST MAKE-UP AIR.

DAMPERS
COOLING MODE: THE MINIMUM OUTSIDE AIR (OA) DAMPER (M1) SHALL BE INTERLOCKED TO OPEN WHEN THE FAN IS ENERGIZED. THE TWO POSITION DAMPER (M2), AND RETURN AIR (RA) DAMPER (M3) SHALL BE CONTROLLED BY THERMOSTAT (T1). WHEN THERMOSTAT T1 IS BELOW THE SET POINT 1 (23 C) DAMPER M2 SHALL BE CLOSED AND M3 SHALL BE IN THE OPEN POSITION. WHEN THERMOSTAT T1 IS ABOVE THE SET POINT 1 (23 C) DAMPER M2 SHALL BE OPEN AND DAMPER M3 SHALL BE IN THE CLOSED POSITION.

HEATING MODE: THE OUTSIDE AIR DAMPER (M1) AND RETURN AIR DAMPER (M3) SHALL OPEN WHEN THE FAN IS ENERGIZED AND CLOSE WHEN THE FAN IS DEENERGIZED. OA DAMPER M2 SHALL STAY CLOSED.

FILTER
PRESSURE DIFFERENTIAL INDICATOR (PDI) PROVIDES LOCAL INDICATION OF PRESSURE DROP ACROSS THE FILTER. ON A RISE IN PRESSURE DROP TO ITS SET POINT, PRESSURE DIFFERENTIAL SWITCH SHALL TURN ON THE DIRTY FILTER ALARM LIGHT AT THE CONTROL PANEL.

TEMPERATURE CONTROL
HEATING (WINTER) MODE: THE DIESEL OIL HEATER (DH) SHALL BE STAGED BY A SPACE THERMOSTAT (T) TO CONTROL THE SUPPLY AIR TEMPERATURE OFF THE UNIT. EVAPORATIVE COOLER CONTROLS SHALL BE LOCKED OUT DURING THE WINTER MODE.
COOLING (SUMMER) MODE: HEATER CONTROLS SHALL BE LOCKED OUT DURING THE SUMMER MODE. THE EVAPORATIVE COOLING WATER PUMP (P1) SHALL BE STAGED BY THE SPACE THERMOSTAT (T) TO MAINTAIN THE SPACE TEMPERATURE SET POINT 2 (25 C).

FAN INTERLOCKS
THE SMOKE DETECTOR (SD) SHALL BE INTERLOCKED TO STOP THE SUPPLY FAN (SF) IN THE EVENT OF SMOKE IN THE SUPPLY DUCT. THE SMOKE DETECTOR SHALL BE CONNECTED TO THE BUILDING FIRE ALARM PANEL.

THE EXHAUST FANS (EF) 1 AND 2 INDICATED IN THE HCU UNIT SCHEDULE SHALL BE INTERLOCKED TO RUN WHEN THE TWO POSITION DAMPER (M2) IS IN THE OPEN POSITION. EXHUAST FAN 3 SHALL BE INTERLOCKED TO RUN WHEN THE SUPPLY FAN IS IN OPERATION.

SYMBOL	DESCRIPTION	DATE	APR

DESIGNED BY: F.MAMDOH
DATE: 06-27-07
DWN BY: A.LATIF
SUBMITTED BY: R. CREWAL CHIEF, BLDG SYSTEMS
CHK BY: A.MAKRAM
FILE NO.: AF0707TB-M-02

US Army Corps of Engineers Transatlantic Programs Center

ANA REGIONAL BRIGADE
PAKTIKA, AFGHANISTAN

TRAINING BUILDING
CONTROL DIAGRAMS

SHEET REFERENCE NUMBER:
X
TB-M-03

$(getvar, "dwgprefix")$(getvar, "dwgname")$(edtime, 0, MON DD",". YYYY - HHMMam/pm)

NOTE:

1. SEE SHEET CO-P-01 & CO-P-02 & CO-P-07 FOR SYMBOLS, ABBREVIATIONS, GENERAL NOTES AND EQUIPMENT SCHEDULES.

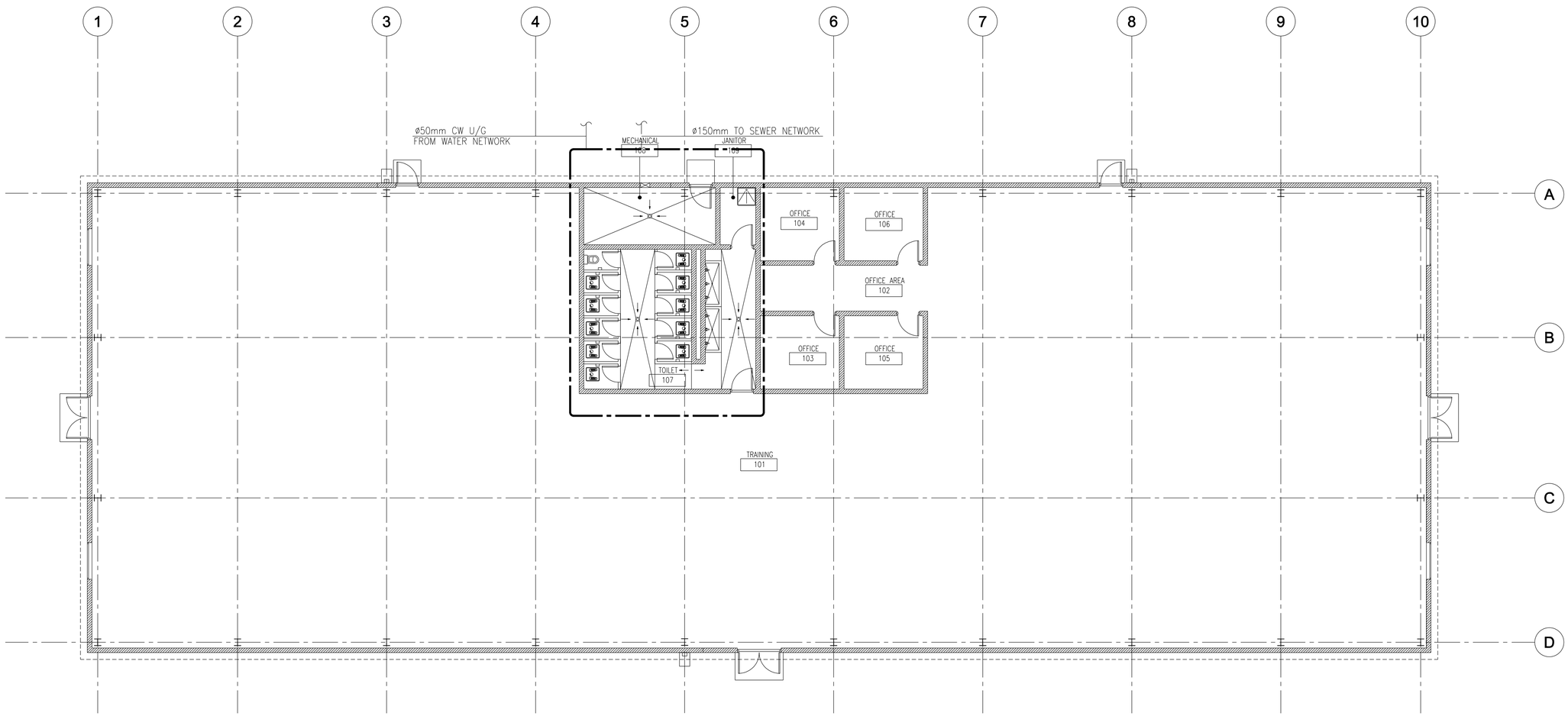

1 PLUMBING FLOOR PLAN

TB-P-01 SCALE: 1:100

1 0 1 2 3 4 5 6 7 8 9
1:100

SYMBOL	DESCRIPTION	DATE	APR

DESIGNED BY: HANAK E.
DWN BY: HANAK M.
CHK BY: G.TAWAB
DATE: 06-27-07
SUBMITTED BY: R. GREWAL
CHIEF, PDT, BLDG SYSTEMS
FILE NO.: AF07071B-P-01

US Army Corps of Engineers
Transatlantic Programs Center

ANA REGIONAL BRIGADE
PAKTIKA, AFGHANISTAN

TRAINING BUILDING

PLUMBING FLOOR PLAN

SHEET REFERENCE NUMBER:
X
TB-P-01

$(getvar, "dwgprefix")$(getvar, "dwgname")$(edtime, 0, MON DD"", YYYY - H:MMam/pm)

NOTE:

1. SEE SHEET CO-P-01 & CO-P-02 & CO-P-07 FOR SYMBOLS, ABBREVIATIONS, GENERAL NOTES AND EQUIPMENT SCHEDULES.

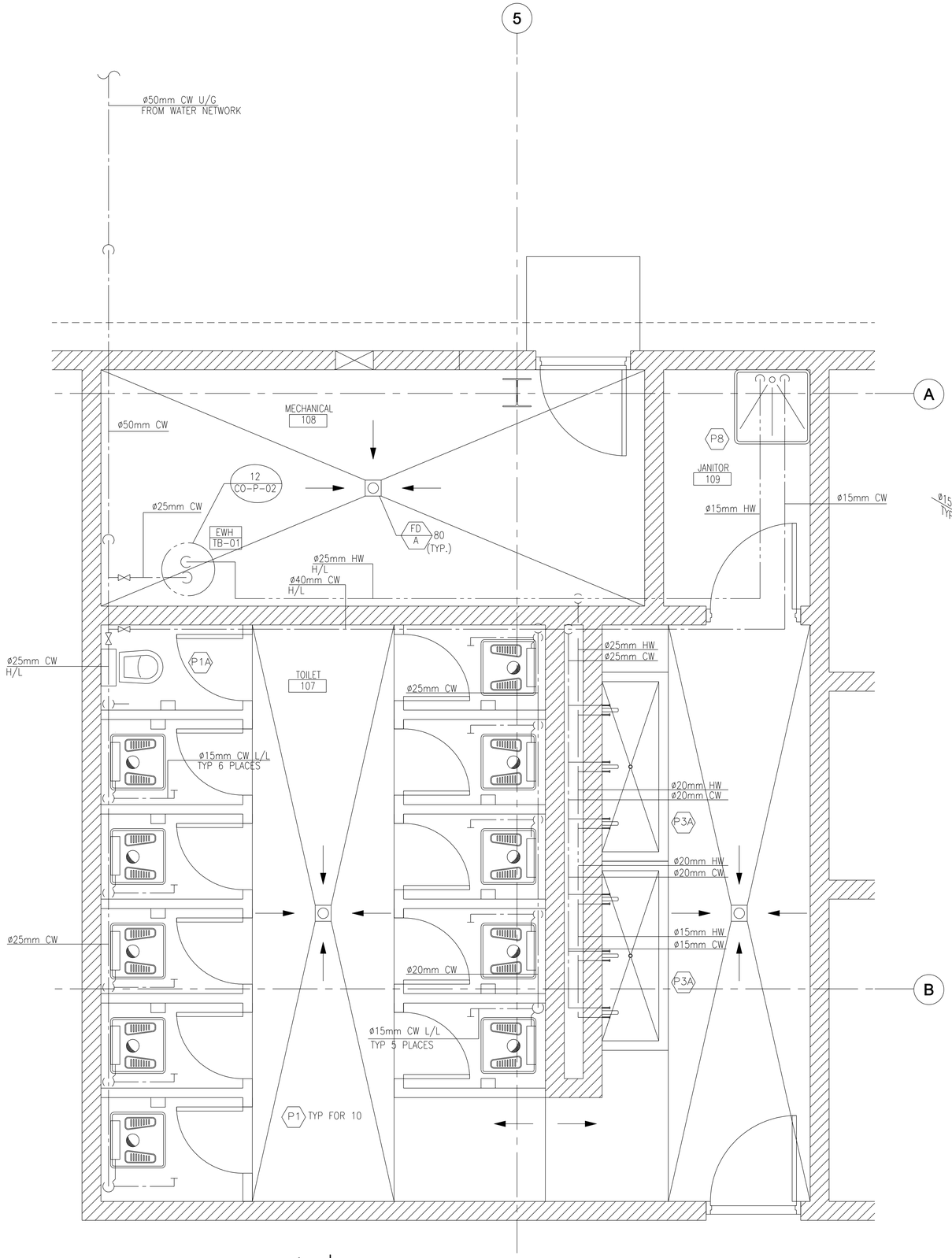

1 COLD & HOT WATER PIPING PLAN

TB-P-02

SCALE: 1:25

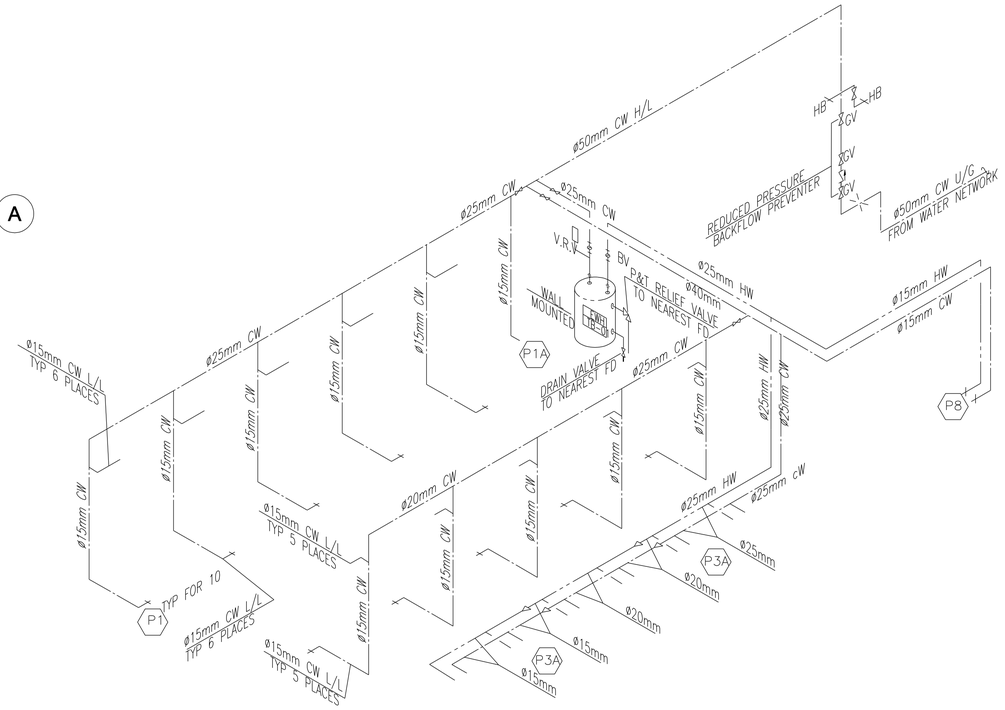

2 COLD & HOT WATER RISER DIAGRAM

TB-P-02

SCALE: N.T.S

1 .50 0 1 1.5
1:25

SYMBOL	DESCRIPTION	DATE	APR

DESIGNED BY: HANXXX, E.
DATE: 06-27-07
DWN BY: HANXX M.
SUBMITTED BY: R. CREWAL, CHIEF, EPD - BLDG SYSTEMS
CHK BY: G.TAWAB
FILE NO.: AF070TB-P-02

US Army Corps of Engineers
Transatlantic Programs Center

ANA REGIONAL BRIGADE
PAKTIKA, AFGHANISTAN

TRAINING BUILDING

COLD & HOT WATER PIPING PLAN

SHEET REFERENCE NUMBER:
X
TB-P-02

$(getvar, "dwgprefix")$(getvar, "dwgname")$(edtime, O, MON DD", YYYY - HHMMam/pm)

NOTE:

1. SEE SHEET CO-P-01 & CO-P-02 & CO-P-07 FOR SYMBOLS, ABBREVIATIONS, GENERAL NOTES AND EQUIPMENT SCHEDULES.

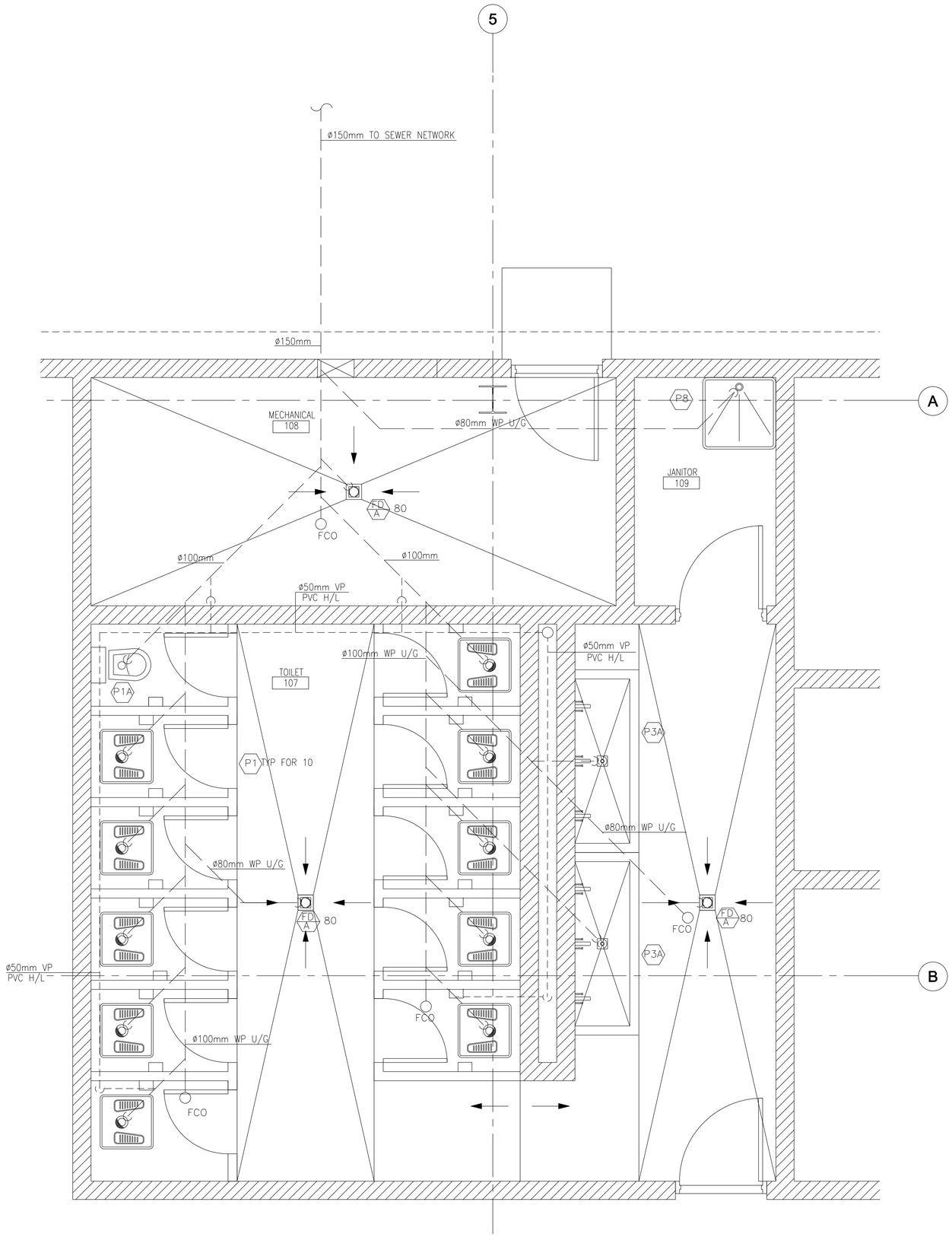

1 DRAINAGE PIPING PLAN

TB-P-03 SCALE: 1:25

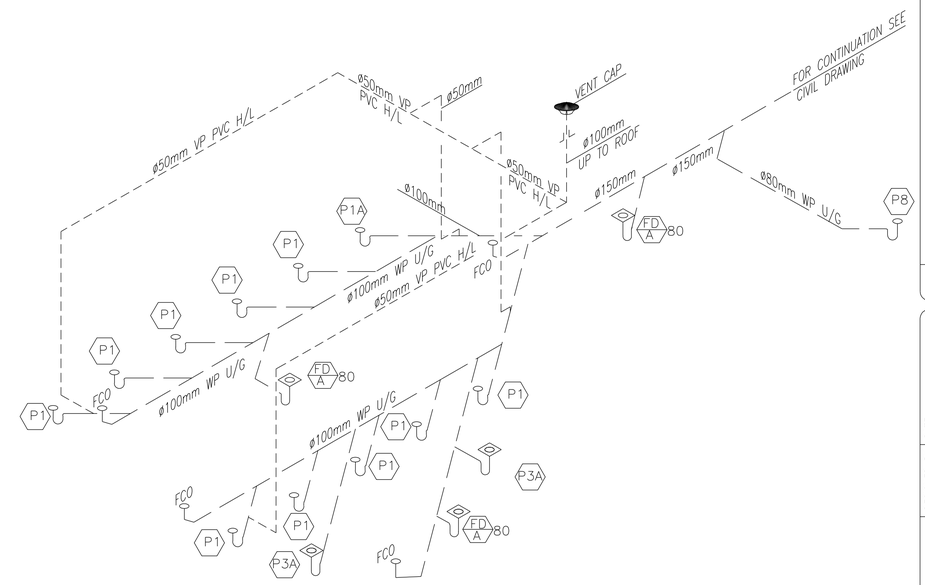

2 DRAINAGE PIPING RISER DIAGRAM

TB-P-03 SCALE: N.T.S

1 .50 0 1 1.5
1:25

SYMBOL	DESCRIPTION	DATE	APR

DESIGNED BY: HANAN E. | DATE: 06-27-07
DWN BY: HANAN M. | SUBMITTED BY: R. GREWAL, CHIEF, PT BLDG SYSTEMS
CHK BY: G.TAWAB | FILE NO.: AF0707TB-P-03

US Army Corps of Engineers
Transatlantic Programs Center

ANA REGIONAL BRIGADE
PAKTIKA, AFGHANISTAN

TRAINING BUILDING

DRAINAGE PIPING PLAN

SHEET REFERENCE NUMBER:
X
TB-P-03

$(getvar, "dwgprefix")$(getvar, "dwgname")$(edtime, O, MON DD"," YYYY - HHMMam/pm)

TRAINING BUILDING PANEL PP

AIC: 25KA
200AT/200AF MCB
MLO
VOLTAGE 380/220V, 3PH, 5W, 50HZ

FEED TOP
MOUNTING SURFACE
LOCATION ELEC ROOM # 101

DESCRIPTION	LOAD (VA) A	B	C	AMP	POLE	CKT	A B C	CKT	POLE	AMP	LOAD (VA) A	B	C	DESCRIPTION
RM 101 LTG	2020			20	1	1		2	1	20	2000			RM 101 REC
RM 101 LTG		2000		20	1	3		4	1	20				SPARE
RM 101 LTG			2000	20	1	5		6	1	20			2200	RM 101,103,104,105,106 RECEP
RM 101 LTG	2020			20	1	7		8	1	20				SPARE
SPARE				20	1	9		10	1	20				SPARE
RM 101 LTG			2020	20	1	11		12	1	20			1300	FOR FUTURE SELF DETECTORS
RM 101 LTG	2000			20	1	13		14	3	100	14414.8			PP1
RM 101 LTG		2000		20	1	15		16				14684.8		
RM 101 LTG			2020	20	1	17		18					15284.8	
RM 102,103,104,105,106 LTG	1800			20	1	19		20	3	32	4601.8			HCU-X-02
RM 107,108,109 LTG		1100		20	1	21		22				4601.8		
EWH-TB-1			3000	25	1	23		24					4601.8	
SPARE				20	1	25		26	3	20	2500			RM 107 UNIT HEATER UH-6
SPARE				20	1	27		28				2500		
SPARE				20	1	29		30					2500	
SPARE				20	1	31		32	3	20	2500			RM 107 UNIT HEATER UH-6
HCU-X-03		4601.8		25	3	33		34				2500		
			4601.8			35		36					2500	
	4601.8					37		38						SPACE
FOR FUTURE SELF DETECTORS		1200		20	1	39		40						SPACE
SPARE				20	1	41		42						SPACE
SUB-TOTALS=	12441.8	10701.8	13641.8								26016.6	24286.6	28386.6	= SUB-TOTALS

	V A	AMPS
TOTAL PHASE A=	38458.4	175
TOTAL PHASE B=	34987.6	159
TOTAL PHASE C=	42028.4	191
TOTAL CONNECTED LOAD	115.87	KVA
DEMAND FACTOR	0.7	
DEMAND LOAD	81.1	KVA
20% FUTURE LOAD	16.22	KVA
TOTAL LOAD	97.32	KVA
TOTAL AMPERE	148.04	AMP

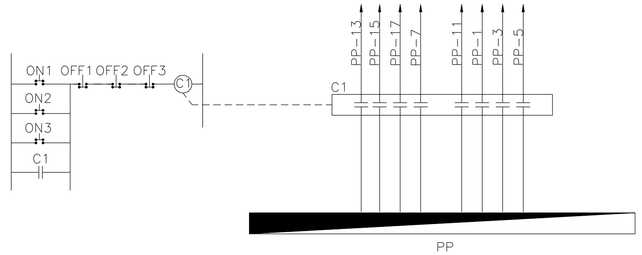

1 SCHEMATIC DIAGRAM FOR LIGHTING CONTROL PANEL LCP

TB-E-01 SCALE: N.T.S.

TRAINING BUILDING PANEL PP1

AIC: 25KA
100A MCB
MLO
VOLTAGE 380/220V, 3PH, 5W, 50HZ

FEED BOTTOM
MOUNTING SURFACE
LOCATION ELEC ROOM # 101

DESCRIPTION	LOAD (VA) A	B	C	AMP	POLE	CKT	A B C	CKT	POLE	AMP	LOAD (VA) A	B	C	DESCRIPTION
RM 109 UNIT HEATER UH-2	2000			20	1	1		2	3	25	500			EF-TB-05
EF-TB-02		500		30	3	3		4				500		
			500			5		6					500	
	500					7		8	3	25	2000			RM 108 UNIT HEATER UH-6
EF-TB-03		500		30	3	9		10				2000		
			500			11		12					2000	
	500					13		14	3	25	4601.8			HCU-X-01
EF-TB-01		500		30	3	15		16				4601.8		
			500			17		18					4601.8	
	500					19		20	1	20				SPARE
RM 106 SUPPLY UNIT SU-1		1875		20	1	21		22	1	20				SPARE
SPARE				20	1	23		24	1	20			1875	RM 105 SUPPLY UNIT SU-1
TTC RECEP	180			20	1	25		26	1	20	600			RM 101 CEILING FAN CF-1
RM 104 SUPPLY UNIT SU-1		1875		20	1	27		28	1	20		180		RECEP
RM 103 SUPPLY UNIT SU-1			1875	20	1	29		30	1	20			1100	RM 101 CEILING FAN CF-1
SPARE				20	1	31		32	1	20	600			RM 101 CEILING FAN CF-1
EF-TB-04		320		20	1	33		34	1	20				SPARE
SPARE				20	1	35		36	1	20				SPARE
SPARE				20	1	37		38	3	20	1333			RM 107 UNIT HEATER UH-4
SPARE				20	1	39		40				1333		
SPARE				20	1	41		42					1333	
SUB-TOTALS=	3680	5570	3375								10734.8	9114.8	11909.8	= SUB-TOTALS

	V A	AMPS
TOTAL PHASE A=	14414.8	84.2
TOTAL PHASE B=	14684.8	88.19
TOTAL PHASE C=	15284.8	82.65
TOTAL CONNECTED LOAD	44.38	KVA
DEMAND FACTOR	0.65	
DEMAND LOAD	28.85	KVA
20% FUTURE LOAD	5.8	KVA
TOTAL LOAD	34.62	KVA
TOTAL AMPERE	52.66	AMP

2 POWER RISER DIAGRAM

TB-E-01 SCALE: N.T.S.

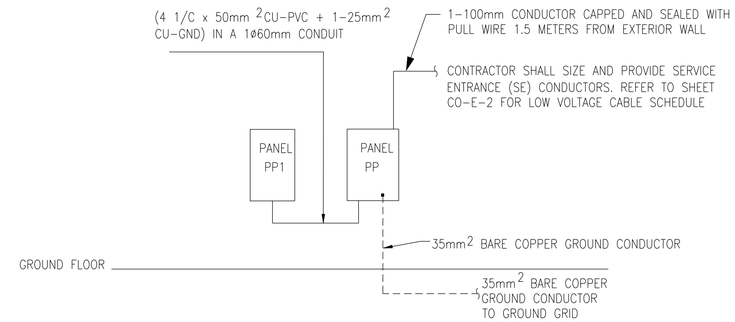

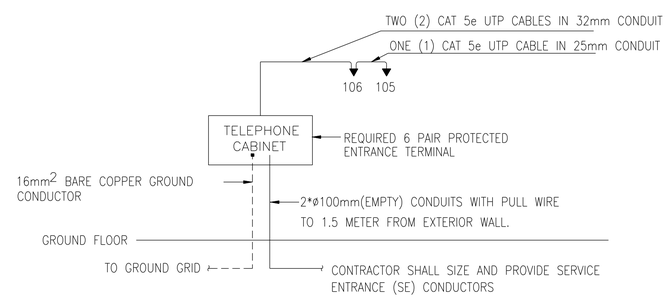

3 TELEPHONE/DATA RISER DIAGRAM

TB-E-01 SCALE: N.T.S.

NOTES:

1. SEE SHEET CO-E-01 FOR SYMBOLS, ABBREVIATIONS, AND GENERAL NOTES
2. SEE SHEET CO-E-02 FOR BRANCH CIRCUIT WIRE SCHEDULE.

SYMBOL	DESCRIPTION	DATE	APR

DESIGNED BY: MAYAX L. DATE: 06-27-07
DWN BY: NAOX S. SUBMITTED BY: R. CREWAL CHIEF, EPD-T BLDG SYSTEMS
CHK BY: SHERRINE S. FILE NO.: AF0707TB-E-01

US Army Corps of Engineers Transatlantic Programs Center

ANA REGIONAL BRIGADE
PAKTIKA, AFGHANISTAN

TRAINING BUILDING
PANEL SCHEDULES AND RISER DIAGRAMS

SHEET REFERENCE NUMBER:
X
TB-E-01

$(getvar, "dwgprefix")$(getvar, "dwgname")$(edtime, 0, MON DD", YYYY - HHMMam/pm)

"NOT USED"

SYMBOL	DESCRIPTION	DATE	APR

DESIGNED BY: MAMAX L.
DATE: 06-27-07
DWN BY: NAGWYS.
SUBMITTED BY: R. GREWAL CHIEF, FOR BLDG SYSTEMS
CHK BY: SHERRINE S.
FILE NO.: AF07071B-E-02

US Army Corps of Engineers Transatlantic Programs Center

ANA REGIONAL BRIGADE
PAKTIKA, AFGHANISTAN

TRAINING BUILDING
PANEL SCHEDULE

SHEET REFERENCE NUMBER:
X
TB-E-02

$(getvar, "dwgprefix")$(getvar, "dwgname")$(edtime, 0, MON DD"", YYYY - H:MMam/pm)

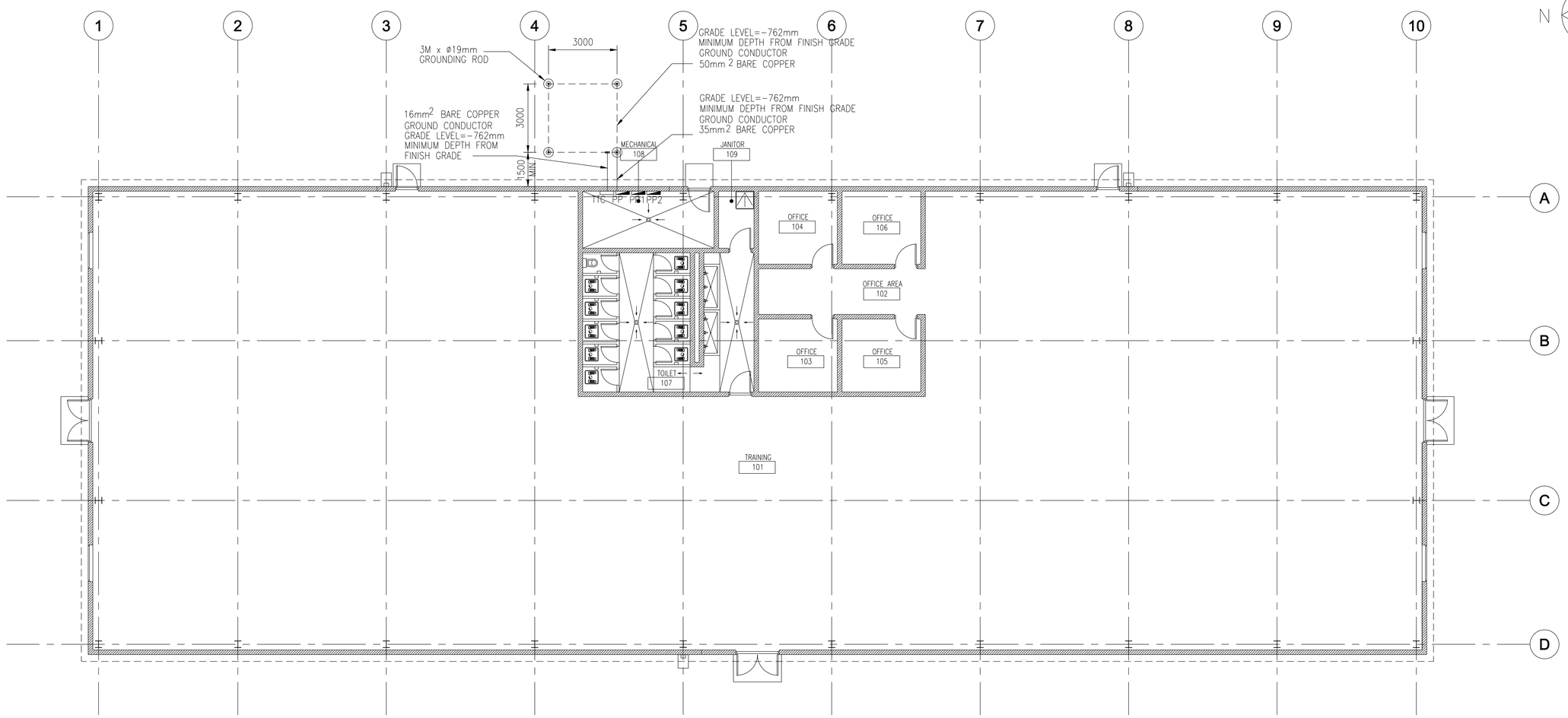

1 GROUNDING PLAN

TB-E-03

SCALE: 1:100

NOTES:

1- SEE SHEET CO-E-01 FOR SYMBOLS, ABBREVIATIONS AND GENERAL NOTES.

2- SEE SHEETS CO-E-03 THRU E-05 FOR STANDARD DETAILS.

3- SEE SHEET TB-E-01 FOR PANEL SCHEDULES AND RISER DIAGRAMS FOR POWER AND TELEPHONE SYSTEMS.

1 0 1 2 3 4 5 6 7 8 9
1:100

SYMBOL	DESCRIPTION	DATE	APR

DESIGNED BY: MANAX L.
DATE: 06-27-07
DWN BY: NAGX S.
SUBMITTED BY: R. CREWAL CHIEF, BLDG SYSTEMS
CHK BY: SHERRINE S.
FILE NO.: AF070TB-E-03

US Army Corps of Engineers Transatlantic Programs Center

ANA REGIONAL BRIGADE
PAKTIKA, AFGHANISTAN

TRAINING BUILDING
GROUNDING PLAN

SHEET REFERENCE NUMBER:
X
TB-E-03

$(getvar, "dwgprefix")$(getvar, "dwgname")$(edtime, O, MON DD"," YYYY - HHMMam/pm)

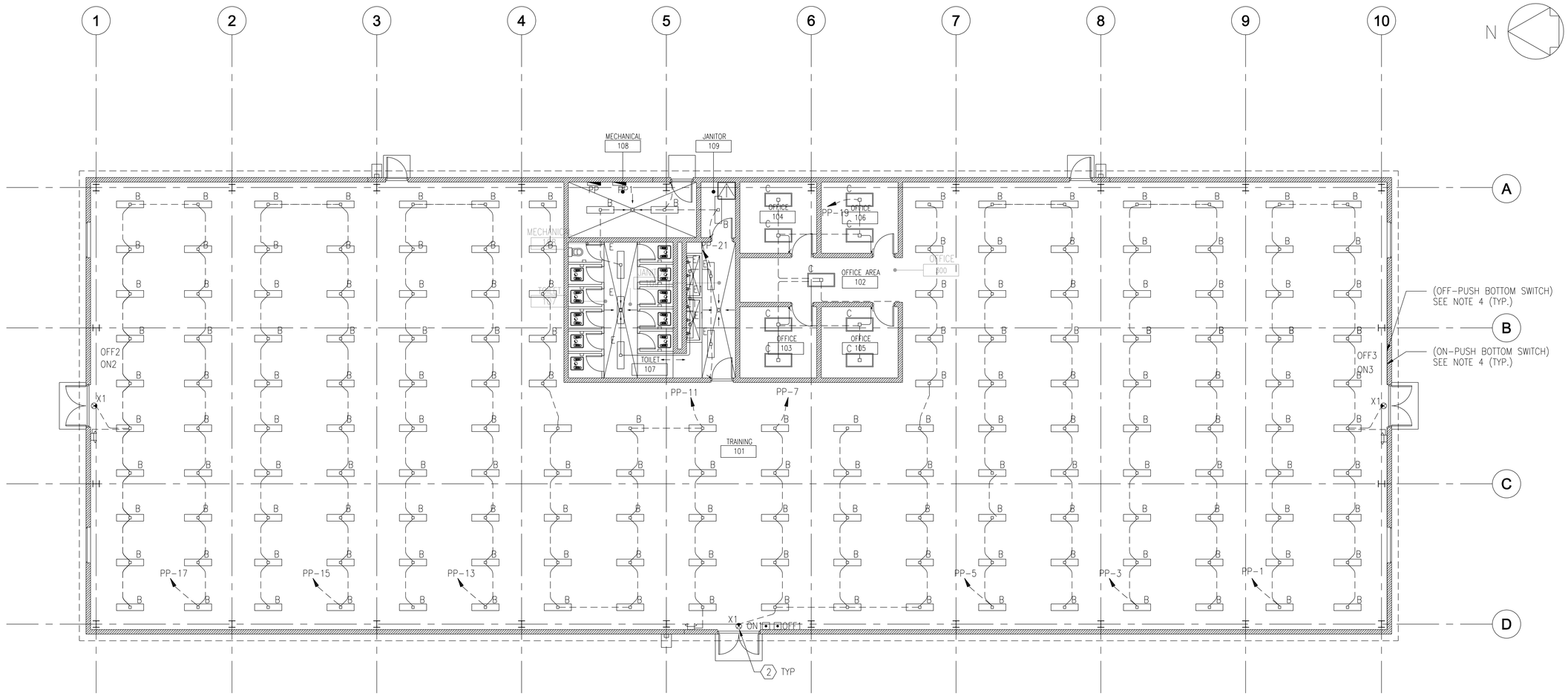

1 LIGHTING PLAN

TB-E-04 SCALE: 1:100

NOTES:

1- SEE SHEET CO-E-01 AND CO-E-02 FOR SYMBOLS, ABBREVIATIONS ANDGENERAL NOTES.

2- SEE SHEETS CO-E-03 THRU E-05 FOR STANDARD DETAILS.

3- SEE SHEET TB-E-01 FOR PANEL SCHEDULE

4- SEE SHEET TB-E-01 FOR LIGHTING CONTROL DIAGRAM

1 0 1 2 3 4 5 6 7 8 9
1:100

SYMBOL	DESCRIPTION	DATE	APR

DESIGNED BY: MAYAX L.
DATE: 06-27-07
DWN BY: NAOX S.
SUBMITTED BY: R. CREWAL CHIEF, BLDG SYSTEMS
CHK BY: SHERRINE S.
FILE NO.: AF07071B-E-04

US Army Corps of Engineers Transatlantic Programs Center

ANA REGIONAL BRIGADE
PAKTIKA, AFGHANISTAN
TRAINING BUILDING
LIGHTING PLAN

SHEET REFERENCE NUMBER:
X
TB-E-04

$(getvar, "dwgprefix")$(getvar, "dwgname")$(edtime, O, MON DD"," YYYY - HHMMam/pm)

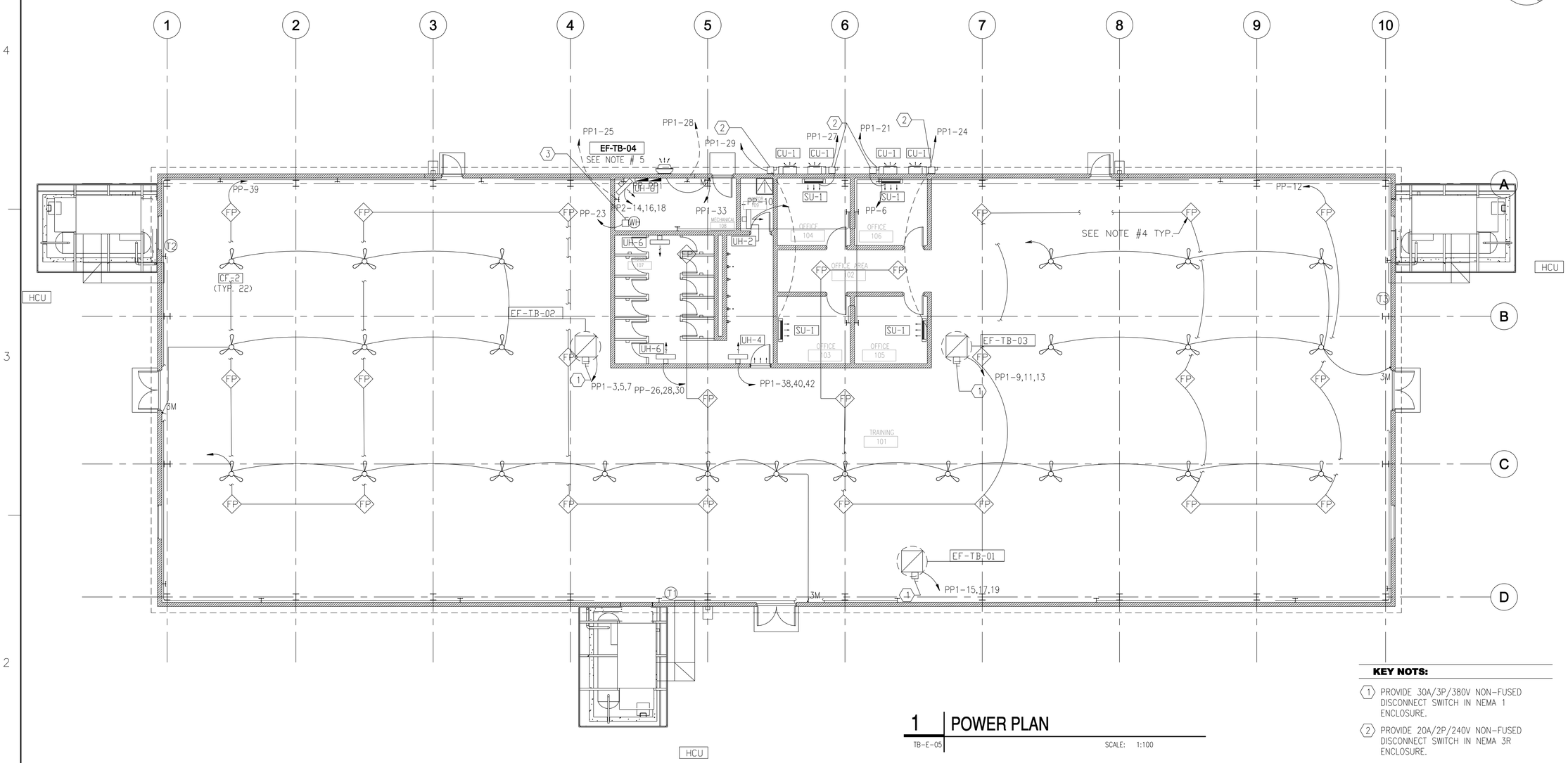

1 POWER PLAN

TB-E-05 SCALE: 1:100

KEY NOTS:

1. PROVIDE 30A/3P/380V NON-FUSED DISCONNECT SWITCH IN NEMA 1 ENCLOSURE.
2. PROVIDE 20A/2P/240V NON-FUSED DISCONNECT SWITCH IN NEMA 3R ENCLOSURE.
3. PROVIDE 30A/2P/240V NON-FUSED DISCONNECT SWITCH IN NEMA 1 ENCLOSURE.

NOTES:

1- SEE SHEET CO-E-01 FOR SYMBOLS, ABBREVIATIONS AND GENERAL NOTES.

2- SEE SHEETS CO-E-03 THRU E-05 FOR STANDARD DETAILS.

3- SEE SHEET TB-E-01 FOR PANEL SCHEDULES AND RISER DIAGRAM FOR POWER AND TELEPHONE SYSTEMS.

4- PROVIDE FIRE ALARM PULL BOXES, CONDUITS AND WIRING FOR FUTURE SELF SMOKE DETECTOR

5- THE EXHAUST FAN SHALL BE EQUIPED WITH DISCONNECT SWITCH FOR MAINTENANCE

1 0 1 2 3 4 5 6 7 8 9
1:100

SYMBOL	DESCRIPTION	DATE	APR

DESIGNED BY: MANAX L. DATE: 06-27-07
DWN BY: NAGX S. SUBMITTED BY: R. CREWAL CHIEF, BLDG SYSTEMS
CHK BY: SHERRINE S. FILE NO.: AF0707TB-E-05

US Army Corps of Engineers Transatlantic Programs Center

ANA REGIONAL BRIGADE
PAKTIKA, AFGHANISTAN

TRAINING BUILDING
POWER PLAN

SHEET REFERENCE NUMBER:
X
TB-E-05

$(getvar, "dwgprefix")$(getvar, "dwgname")$(edtime, O, MON DD", " YYYY - HHMMam/pm)

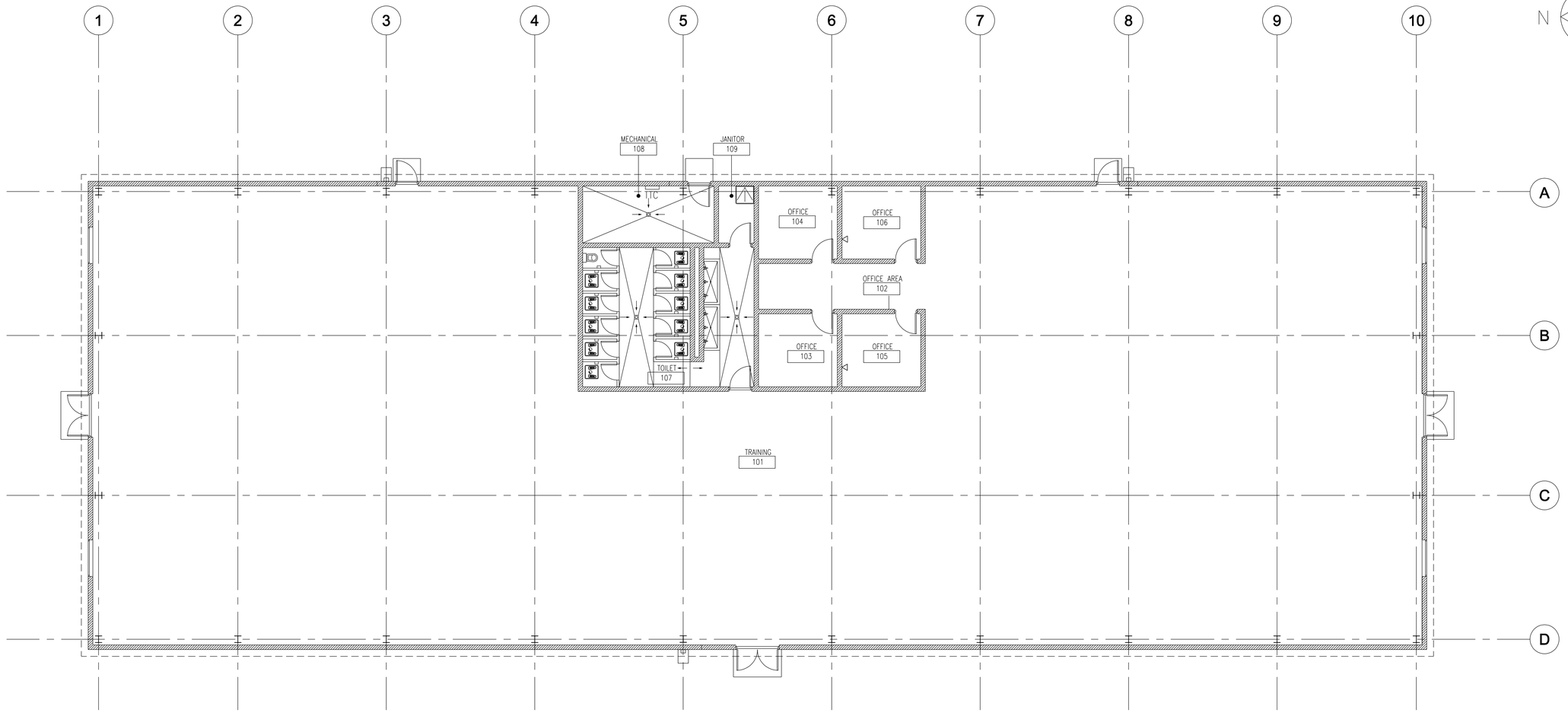

1 COMMUNICATION PLAN

TB-E-06 SCALE: 1:100

1 0 1 2 3 4 5 6 7 8 9
1:100

SYMBOL	DESCRIPTION	DATE	APR

DESIGNED BY: MAYAX L.
DATE: 06-27-07
DWN BY: NAGX S.
SUBMITTED BY: R. CREWAL CHIEF, BLDG SYSTEMS
CHK BY: SHERRINE S.
FILE NO.: AF07071B-E-06

US Army Corps of Engineers Transatlantic Programs Center

ANA REGIONAL BRIGADE
PAKTIKA, AFGHANISTAN
TRAINING BUILDING
COMMUNICATION PLAN

SHEET REFERENCE NUMBER:
X
TB-E-06

$(getvar, "dwgprefix")$(getvar, "dwgname")$(edtime, O, MON DD", " YYYY - H:MMam/pm)

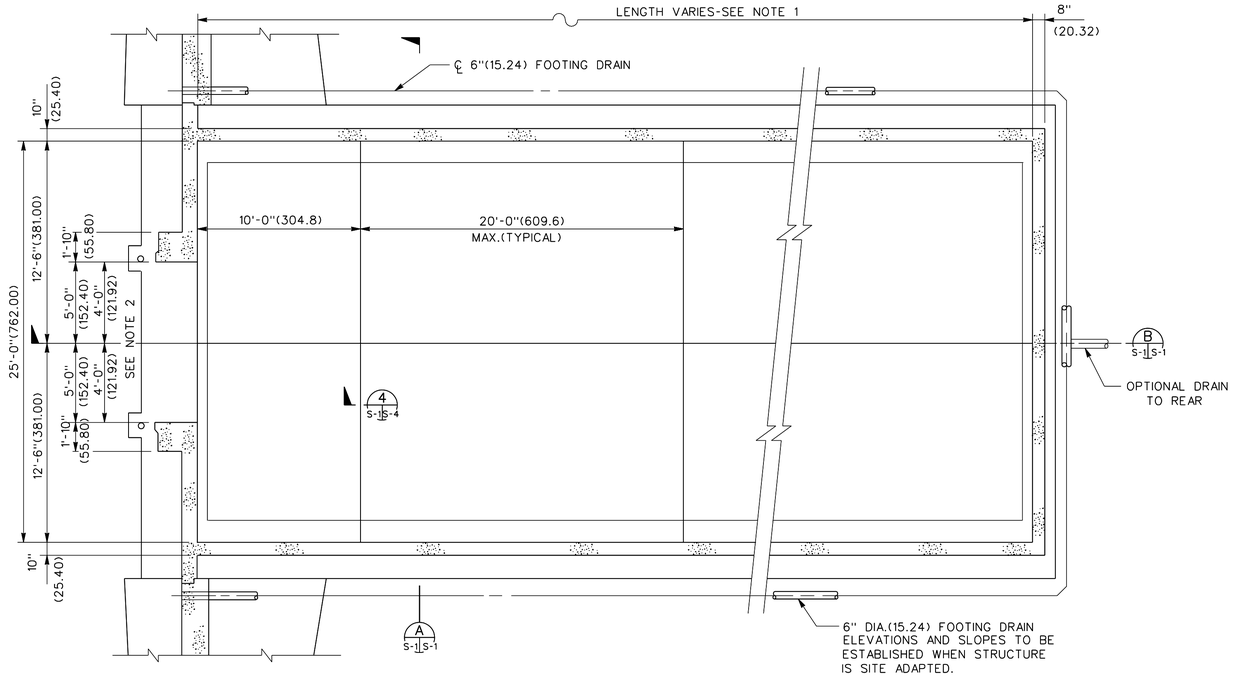

PLAN
NOT TO SCALE

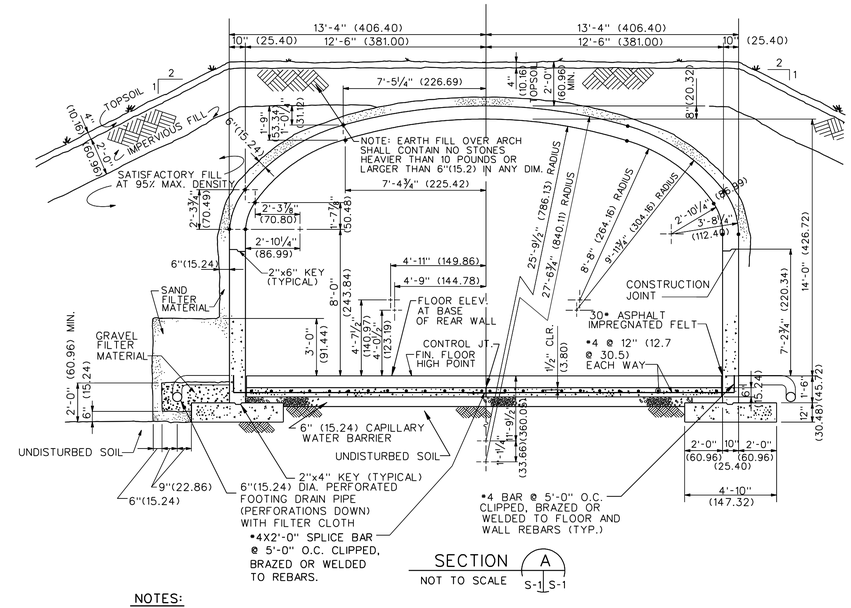

SECTION A S-1 S-1
NOT TO SCALE

NOTES:

1. NORMALLY CONSTRUCTED IN 60'-0" OR 80'-0" LENGTHS. MAXIMUM LENGTH WITH FLOOR SLOPE: 90'-0"
2. DOOR OPENING TO BE SIZED FOR OPTIONAL DOOR SIZE REQUIRED.
3. CONCRETE SHALL HAVE 28 DAY ULTIMATE STRENGTH (f'c) OF 4,000 P.S.I.
4. REINFORCING STEEL SHALL BE ASTM A615 GRADE 60
5. DIMENSIONS SHOWN IN PARENTHESES ARE CENTIMETERS UNLESS OTHERWISE NOTED.(FOR INFO ONLY) ALL REBAR METRIC SIZES ARE IN MILLIMETERS.
6. DRAINS TO BE SITE ADAPTED TO DRAIN EITHER TO THE FRONT OR REAR OF THE MAGAZINE.
7. ALL METAL PARTS, TO INCLUDE REINFORCEMENT, LOUVERS, VENTILATOR, DOOR, DOOR FRAME, ETC., SHALL BE MADE ELECTRICALLY CONTINUOUS BY CLIPPING, BRAZING, OR WELDING. ELECTRICAL CONTINUITY SHALL BE PROVIDED ACROSS FLOOR CONSTRUCTION JOINTS AND ACROSS FLOOR ISOLATION JOINTS TO TO ARCH REINFORCEMENT AT 5 LINEAR FEET INTERVALS. ACCEPTABLE ELECTRICAL CONTINUITY METHODS ARE REINFORCEMENT BARS, COPPER STRAPS. ETC.
8. IN FROST AREAS PROVIDE NONFROST-SUSCEPTIBLE MATERIAL UNDER HEADWALL FOOTING, TO FULL DEPTH OF FROST PENETRATION, OR LOWER BOTTOM OF FOOTING TO FROST PENETRATION DEPTH.
9. OCE STANDARD DWG 33-15-73
10. LOUVERS ARE OPTIONAL. THEIR NECESSITY AND SIZE SHALL BE DETERMINED DURING THE SITE-ADAPTION PROCESS BASED ON MATERIALS TO BE STORED AND GEOGRAPHICAL LOCATIONS. THE LOUVER WIDTH OF 6 INCHES SHALL BE MAINTAINED. THE HEIGHT MAY BE VARIED AS NECESSARY.

ARMY STANDARDS MAGAZINE
STD 33-15-74

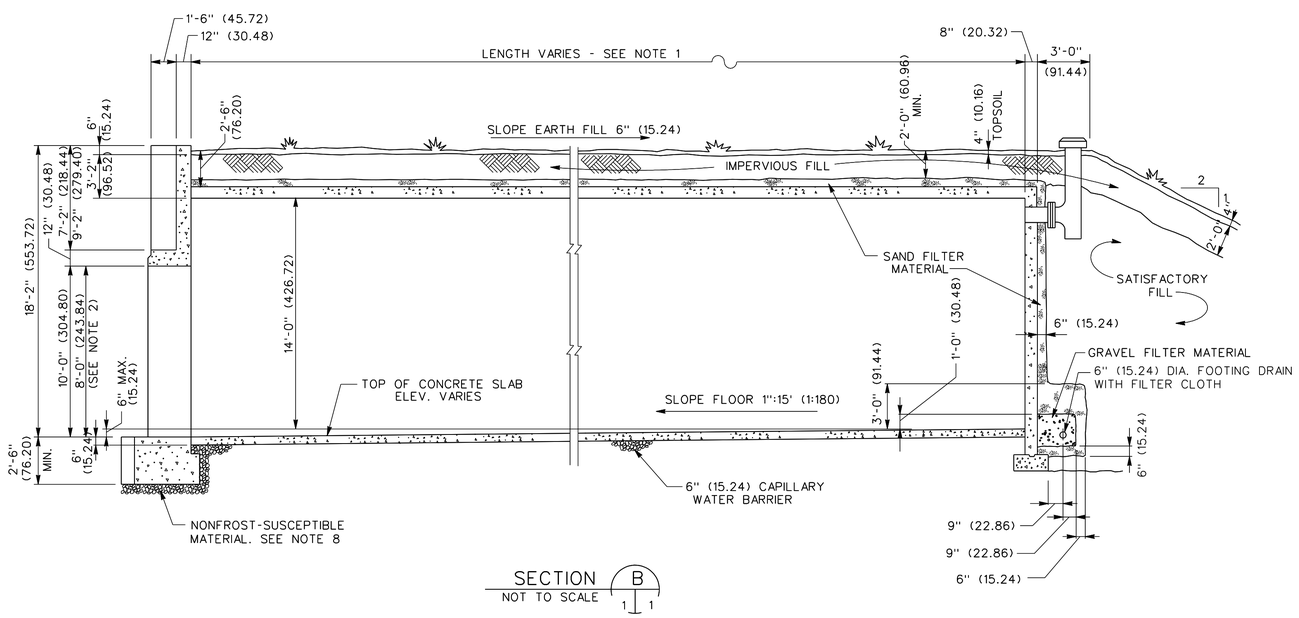

SECTION B
NOT TO SCALE

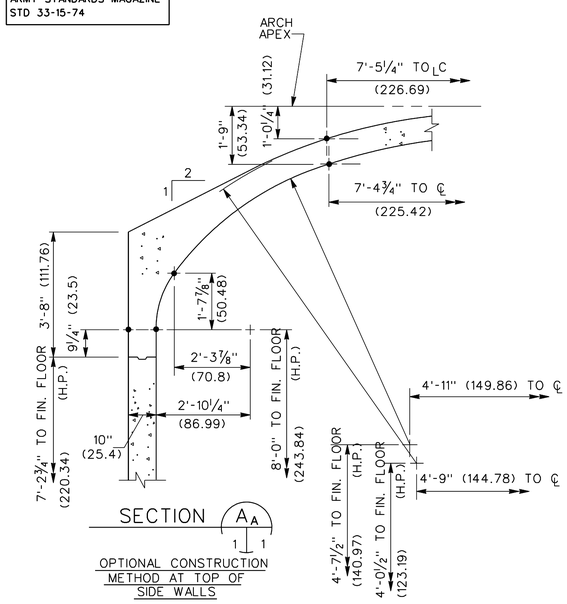

SECTION A A
OPTIONAL CONSTRUCTION METHOD AT TOP OF SIDE WALLS

DRAWING NOT TO SCALE

SYMBOL	DESCRIPTION	DATE	APR

DESIGNED BY: TCP	DATE: 06-27-07
DWN BY: TCP	SUBMITTED BY: Philip J. DINELLO PROJECT ARCHITECT DEV
CHK BY: KGO	FILE NO.: AF0707 ZA-SB01PN

US Army Corps of Engineers Transatlantic Programs Center

ANA REGIONAL BRIGADE
PAKTIKA, AFGHANISTAN

AMMO SUPPLY POINT
FOUNDATION PLAN AND SECTION

SHEET REFERENCE NUMBER:
ZA
S-1

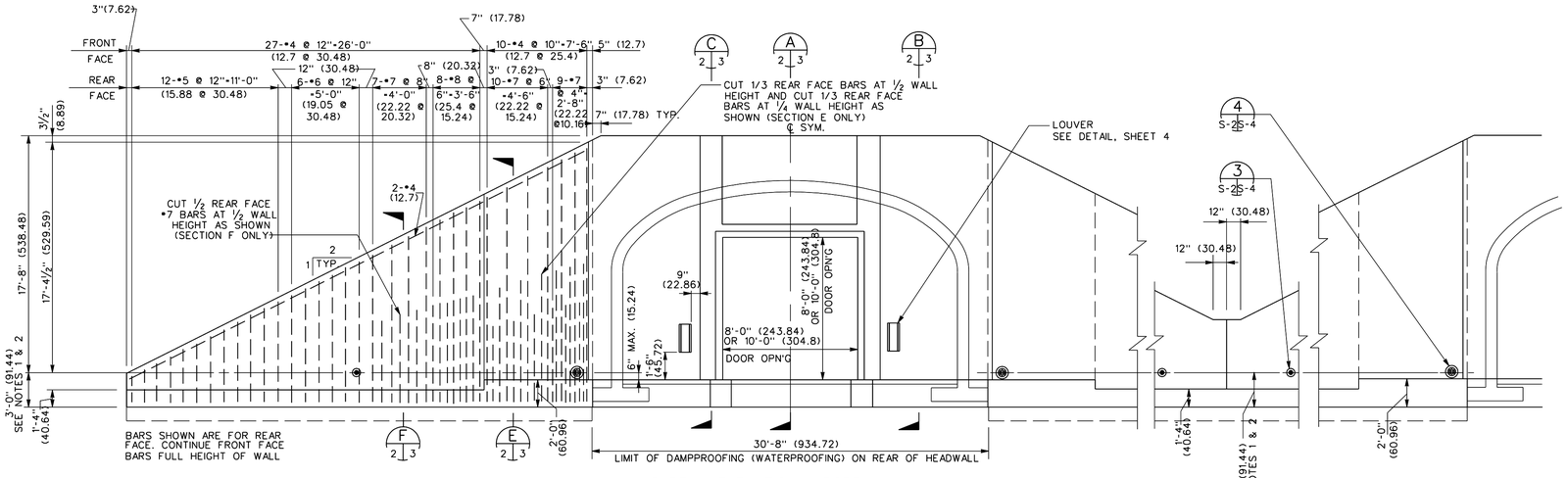

PARTIAL ELEVATION - PORTAL WALL

NOT TO SCALE

NOTES:

1. IF, AS A RESULT OF THE FOUNDATION INVESTIGATION OR LOCAL FROST CONDITIONS, IT IS DETERMINED THAT ANY OR ALL WALL FOOTINGS MUST BE LOWERED, THE APPROPRIATE WALL AND FOOTING DESIGNS MUST BE CHECKED AND ADJUSTED AS REQUIRED TO SUIT THESE CONDITIONS.
2. FOOTINGS ARE SIZED FOR A SOIL BEARING VALUE OF 3,000 P.S.F.. FOOTINGS MUST BE REDESIGNED IF THE SOILS INVESTIGATION DOES NOT CONFIRM THIS MINIMUM BEARING CAPACITY.
3. ALTERNATE MATERIALS AND/OR SYSTEMS MAY BE SUBMITTED FOR ACCEPTANCE AS A SUBSTITUTE FOR POURED-IN-PLACE WING WALLS, PROVIDED THEY ARE SHOWN TO BE STRUCTURALLY ADEQUATE AND COST EFFECTIVE.

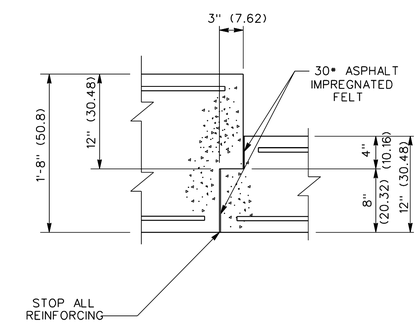

DETAIL 1 (S-2 / S-2)

NOT TO SCALE

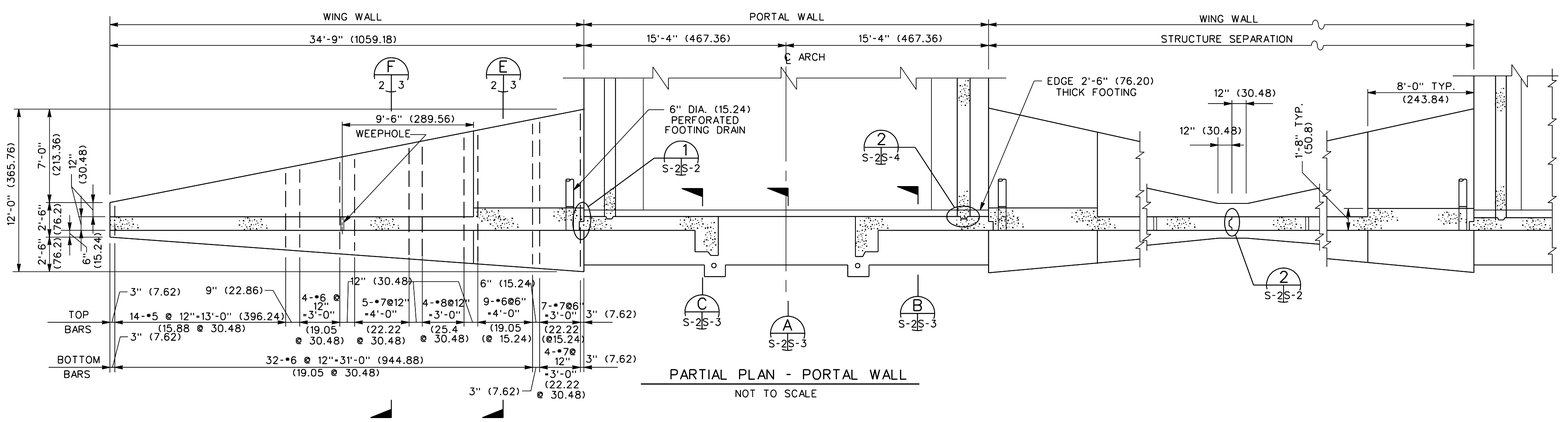

PARTIAL PLAN - PORTAL WALL

NOT TO SCALE

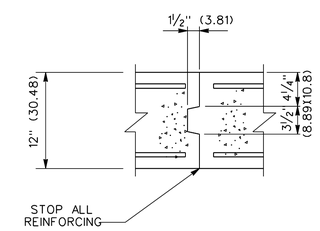

DETAIL 2 (S-2 / S-2)

NOT TO SCALE

DRAWING NOT TO SCALE

SYMBOL	DESCRIPTION	DATE	APR

DESIGNED BY: TCP
DWN BY: TCP
CHK BY: KGO
DATE: 06-27-07
SUBMITTED BY: PHILIP J. DINELLO, P.E. PROJECT ARCHITECT DEV
FILE NO.: AF0707 ZA-SB02EL

US Army Corps of Engineers Transatlantic Programs Center

ANA REGIONAL BRIGADE
PAKTIKA, AFGHANISTAN

AMMO SUPPLY POINT

BUILDING ELEVATION

SHEET REFERENCE NUMBER:
ZA
S-2

$(getvar, "dwgprefix")$(getvar, "dwgname")$(edtime, 0, MON DD", YYYY - H:MMam/pm)

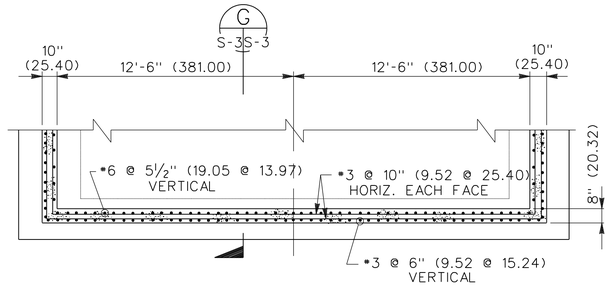

PLAN - REAR WALL
NOT TO SCALE

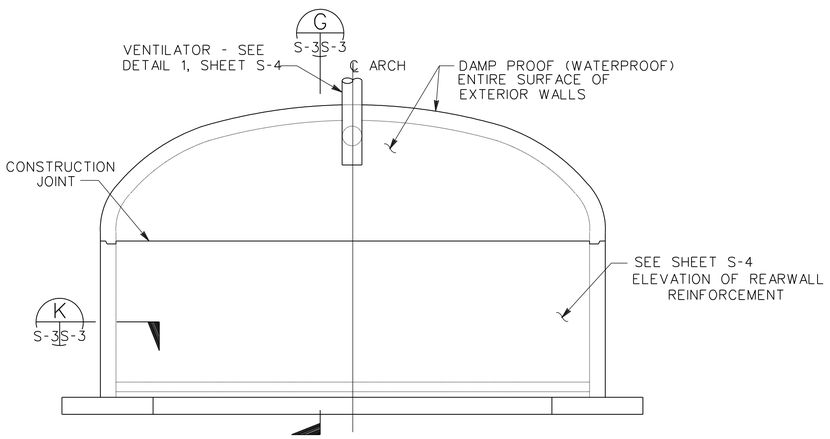

ELEVATION - REAR WALL
NOT TO SCALE

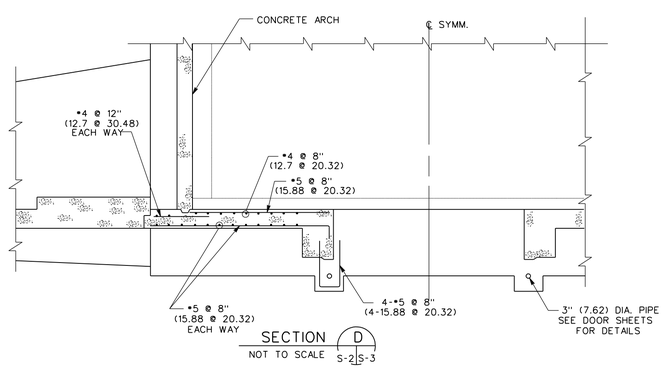

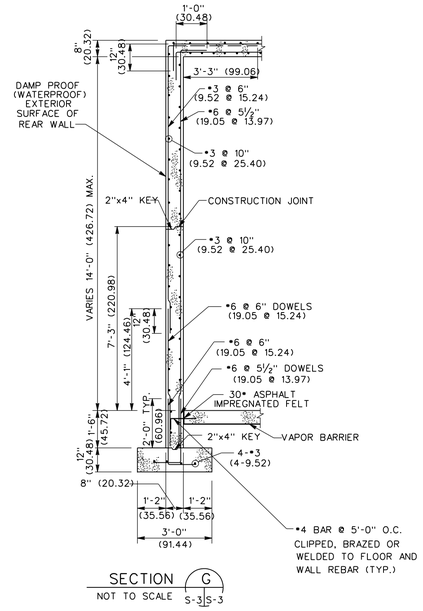

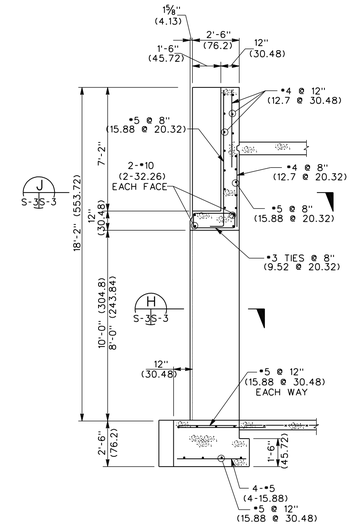

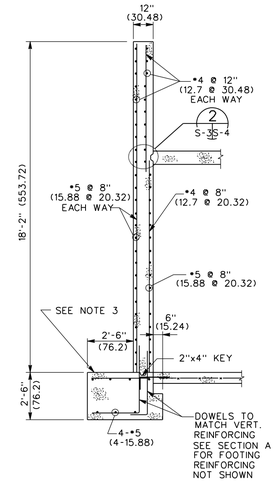

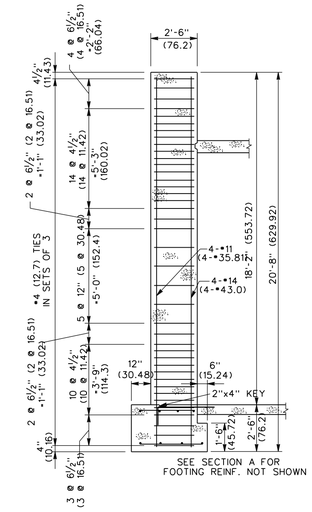

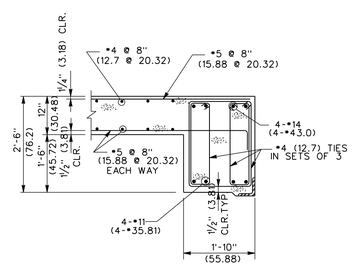

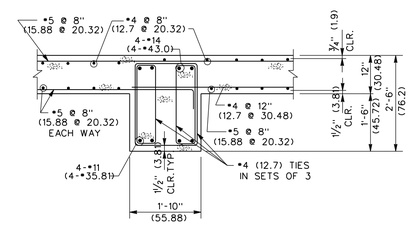

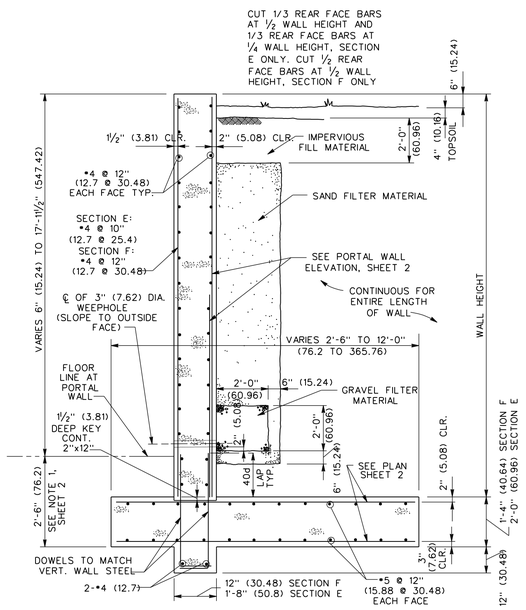

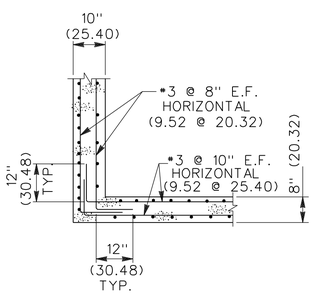

NOTES:

1. THE SAND AND GRAVEL DRAINAGE SYSTEM SHOWN IN SECTIONS E AND F SHOULD BE TERMINATED AT THE POINT WHERE THE HEADWALL HEIGHT IS INSUFFICIENT TO MAINTAIN THE 2" IMPERVIOUS FILL MATERIAL COVER OVER AT LEAST 6" OF SAND FILTER MATERIAL. PAST THIS POINT, AN ADDITIONAL 6" OF SAND FILTER MATERIAL SHOULD BE ADDED TO "CLOSE IN" THE END OF THE GRAVEL FILTER MATERIAL.
2. TOP OF MAGAZINE PORTAL FOOTING MUST BE MAINTAINED AT FINISHED FLOOR ELEVATION FOR THE FULL 2'-6" BEYOND FACE OF PORTAL TO MAINTAIN SLIDING DOOR OPERATION. DO NOT EXTEND DOCK OR RAMP SLABS UNDER DOOR.
3. AS AN OPTION, DEPENDING ON SITE-SPECIFIC CONDITIONS, THE WEEPHOLES THROUGH THE HEADWALL, SHOWN IN SECTIONS E AND F, MAY BE REPLACED WITH PERFORATED PIPE DRAINS PLACED IN THE GRAVEL FILTER MATERIAL RUNNING LATERALLY BEHIND THE HEADWALL AND CONNECTED TO THE PERIMETER FOOTING DRAINS FOR THE IGLOOS.

DRAWING NOT TO SCALE

SYMBOL	DESCRIPTION	DATE	APR

DESIGNED BY: TCP
DWN BY: TCP
CHK BY: KGO
DATE: 06-27-07
SUBMITTED BY: PHILLIP J. DINELLO, P.E. PROJECTS DEV
FILE NO.: AF0707 ZA-SB03SE

US Army Corps of Engineers Transatlantic Programs Center

ANA REGIONAL BRIGADE
PAKTIKA, AFGHANISTAN
AMMO SUPPLY POINT
SECTIONS AND DETAILS

SHEET REFERENCE NUMBER:
ZA
S-3

$(getvar, "dwgprefix")$(getvar, "dwgname")$(edtime, 0, MON DD"", YYYY - H:MMam/pm)

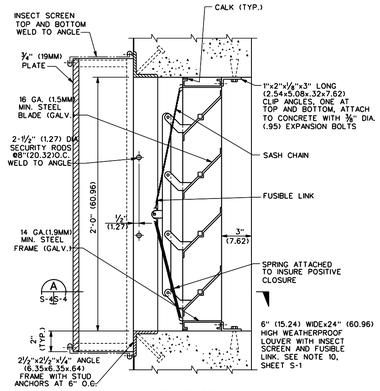

LOUVER DETAIL
NOT TO SCALE

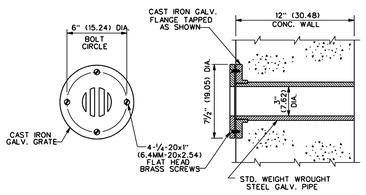

DETAIL 3
NOT TO SCALE S-2 S-4

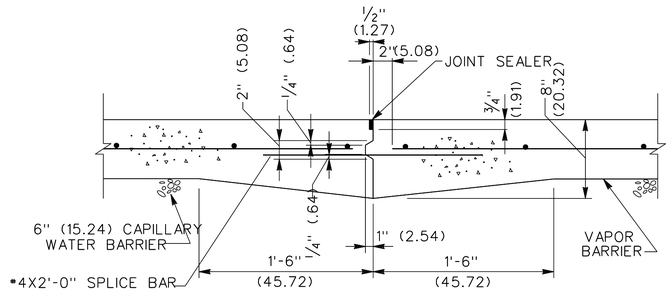

FLOOR CONSTRUCTION JOINT

DETAIL 4
NO SCALE S-1 S-4

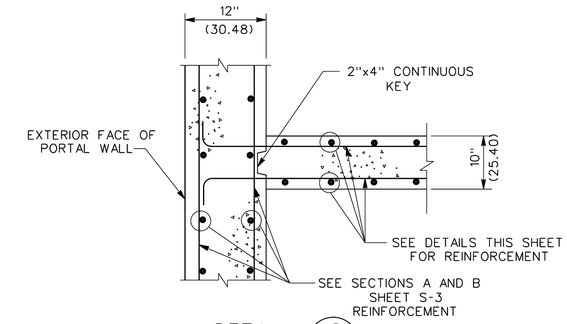

DETAIL 2
NO SCALE S-2 S-4

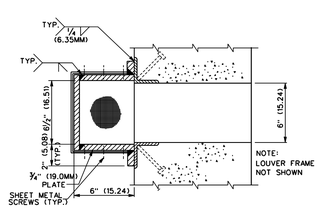

SECTION A
NOT TO SCALE S-4 S-4

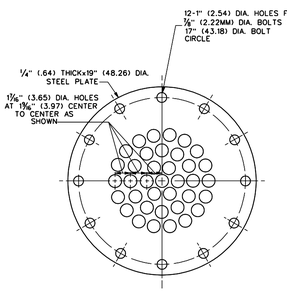

VENTILATOR FLAME PLATE DETAIL
NOT TO SCALE

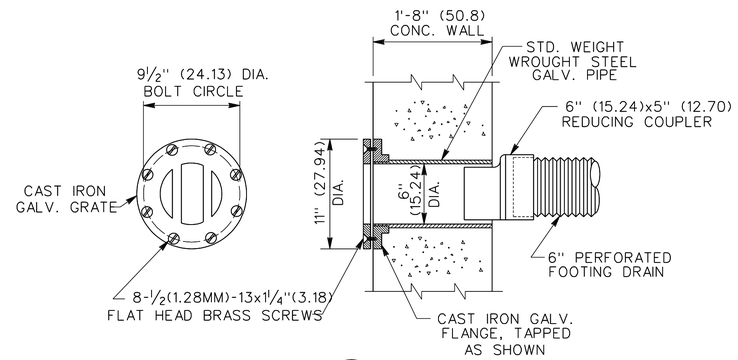

DETAIL 4
NOT TO SCALE S-2 S-4

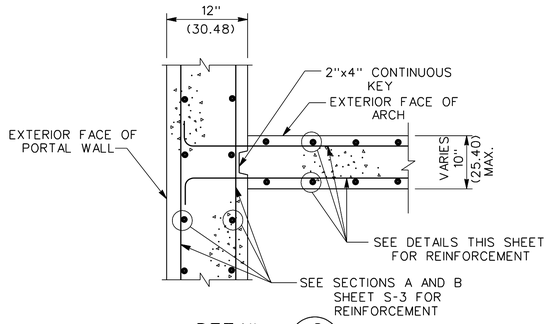

DETAIL 2
NO SCALE S-3 S-4

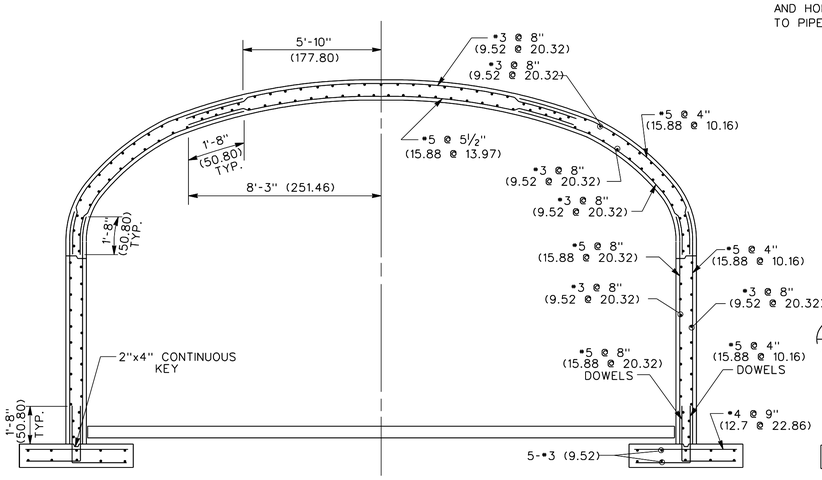

TYPICAL ARCH REINFORCEMENT
NOT TO SCALE

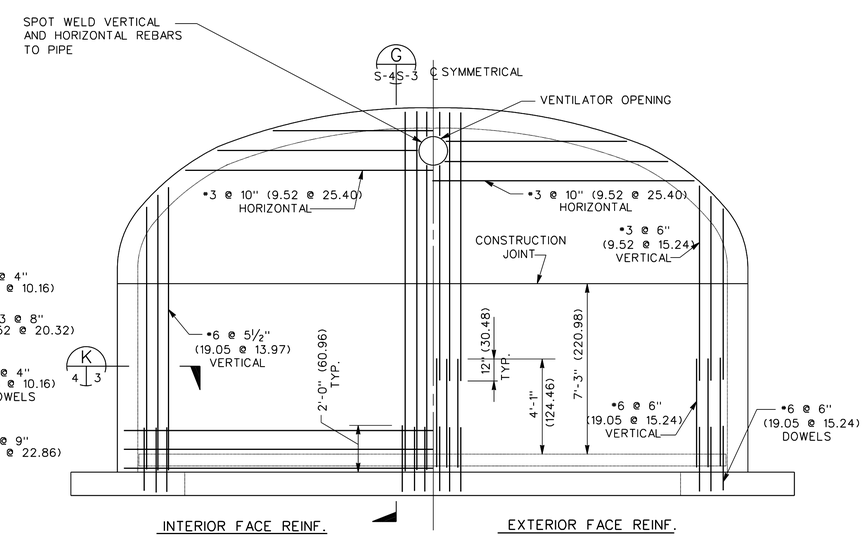

ELEVATION REAR WALL REINFORCEMENT
NOT TO SCALE

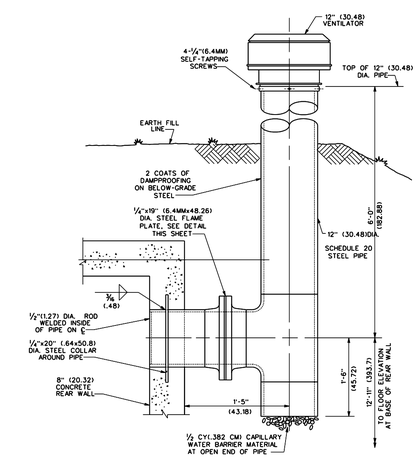

VENTILATOR DETAIL 1
NOT TO SCALE S-1 S-4

DRAWING NOT TO SCALE

SYMBOL	DESCRIPTION	DATE	APR

DESIGNED BY: TCP
DWN BY: TCP
CHK BY: KGO
DATE: 06-27-07
SUBMITTED BY: Philip J. DINELLO, P.E. PROJECTS DEV.
FILE NO.: AF0707 ZA-SB04DT

US Army Corps of Engineers Transatlantic Programs Center

ANA REGIONAL BRIGADE
PAKTIKA, AFGHANISTAN

AMMO SUPPLY POINT

DETAILS

SHEET REFERENCE NUMBER:
ZA
S-4

$(getvar, "dwgprefix")$(getvar, "dwgname")$(edtime, 0, MON DD", YYYY - H:MMam/pm)

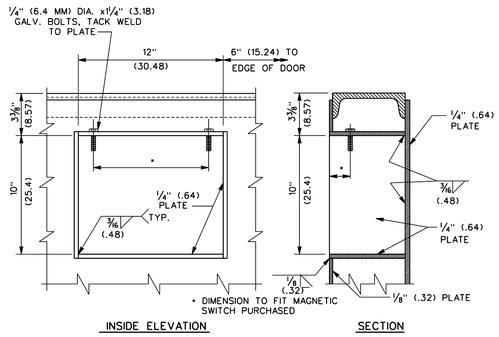

INSIDE ELEVATION

SECTION

BOXOUT DETAILS

NOT TO SCALE

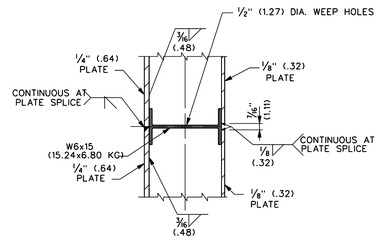

NOTE:
COVER PLATES SHALL BE SPLICED ONLY AS REQUIRED BY THE SIZE OF PLATES AVAILABLE. LOCATION OF SPLICE(S) SHALL BE DETERMINED BY THE CONTRACTOR AND THE SPLICE SHALL CONFORM TO THIS DETAIL.

COVER PLATE SPLICE DETAIL

NOT TO SCALE

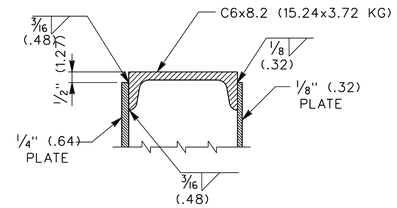

DETAIL 1

NOT TO SCALE S-5 S-5

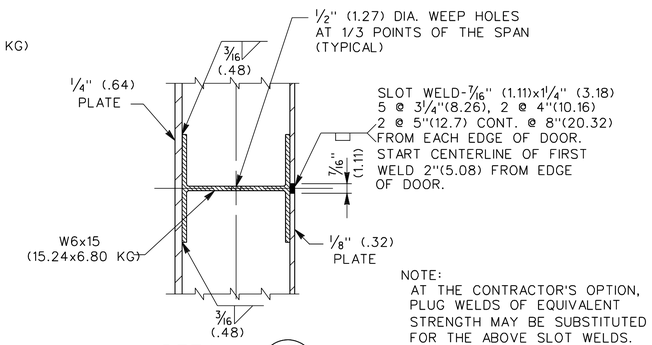

NOTE:
AT THE CONTRACTOR'S OPTION, PLUG WELDS OF EQUIVALENT STRENGTH MAY BE SUBSTITUTED FOR THE ABOVE SLOT WELDS.

DETAIL 3

NOT TO SCALE S-5 S-5

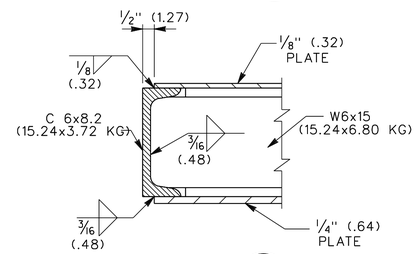

DETAIL 2

NOT TO SCALE S-5 S-5

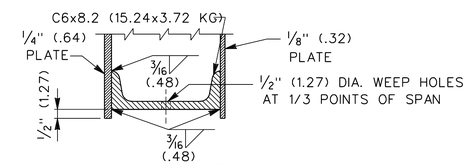

DETAIL 4

NOT TO SCALE S-5 S-5

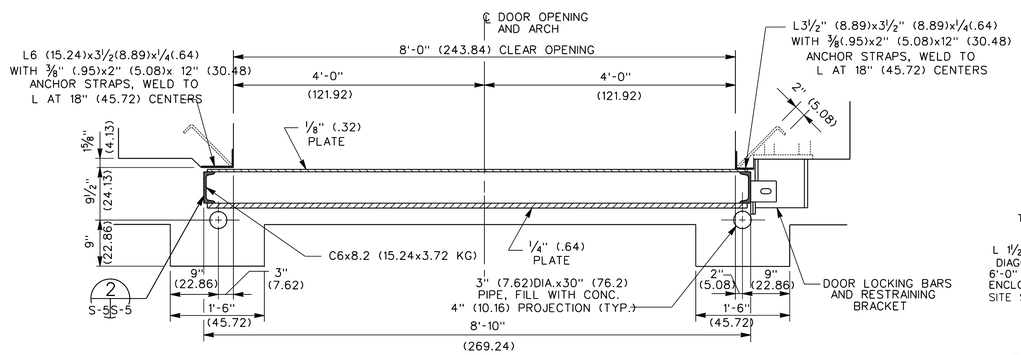

SECTION B

NOT TO SCALE S-5 S-5

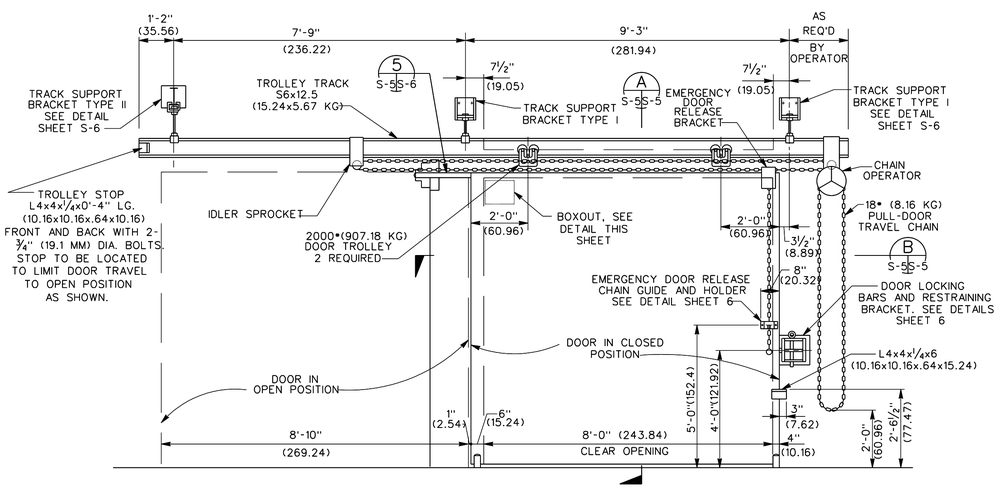

ELEVATION

NOT TO SCALE

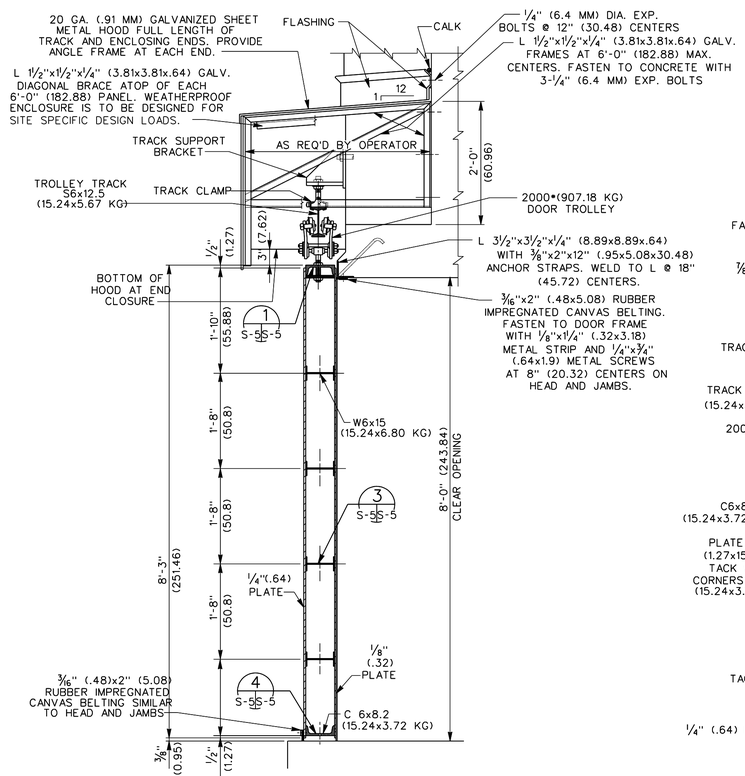

SECTION A

NOT TO SCALE S-5 S-5

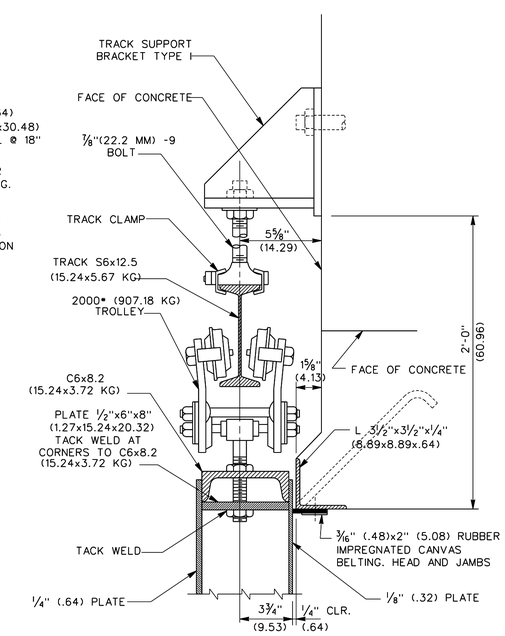

HEAD SECTION

NOT TO SCALE

DRAWING NOT TO SCALE

SYMBOL	DESCRIPTION	DATE	APR

DESIGNED BY: TCP
DWN BY: TCP
CHK BY: KGO
DATE: 06-27-07
SUBMITTED BY: PHILIP J. PINELLO PROJECTS DEV.
FILE NO.: AF0707 ZA-SB05SE

US Army Corps of Engineers Transatlantic Programs Center

ANA REGIONAL BRIGADE
PAKTIKA, AFGHANISTAN

AMMO SUPPLY POINT

DETAILS

SHEET REFERENCE NUMBER:
ZA
S-5

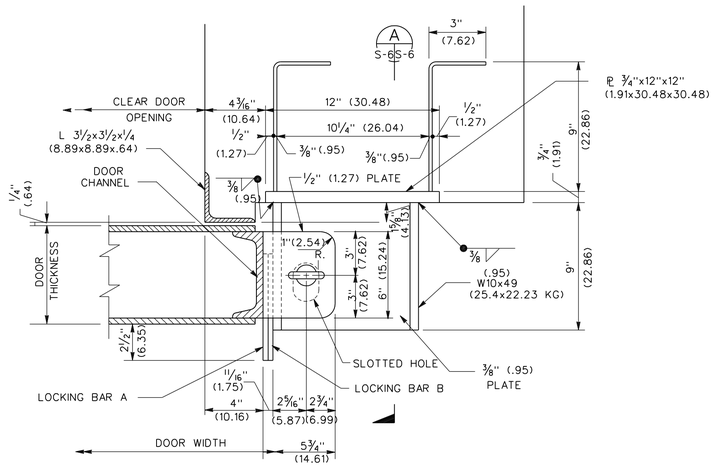

PLAN
NOT TO SCALE

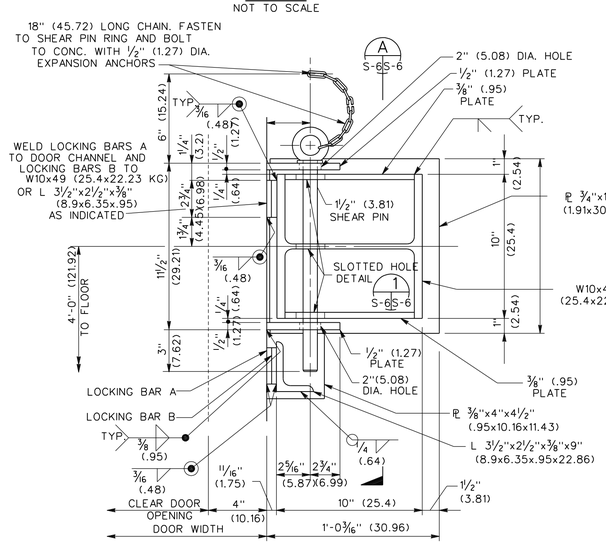

ELEVATION
NOT TO SCALE

RESTRAINING BRACKET DETAILS

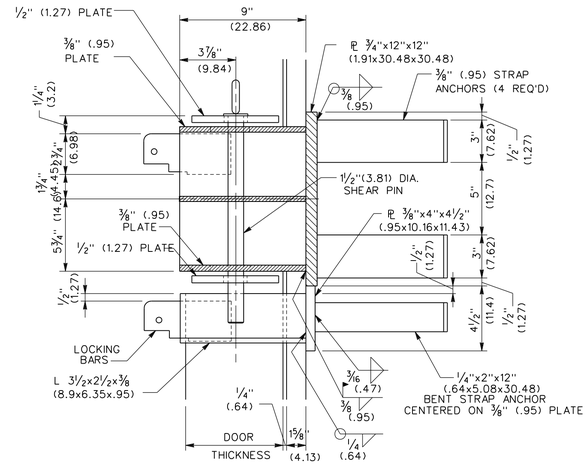

SECTION A
NOT TO SCALE S-6|S-6

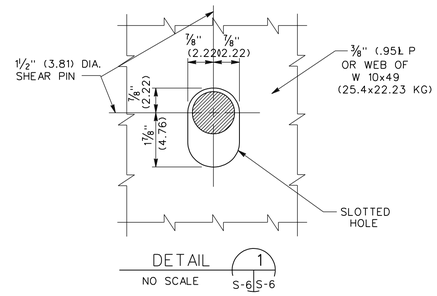

DETAIL 1
NO SCALE S-6|S-6

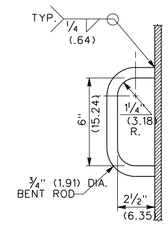

DOOR HANDLE
NOT TO SCALE

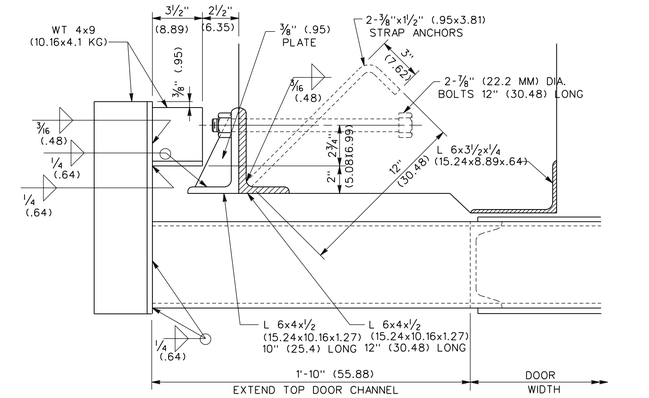

PLAN

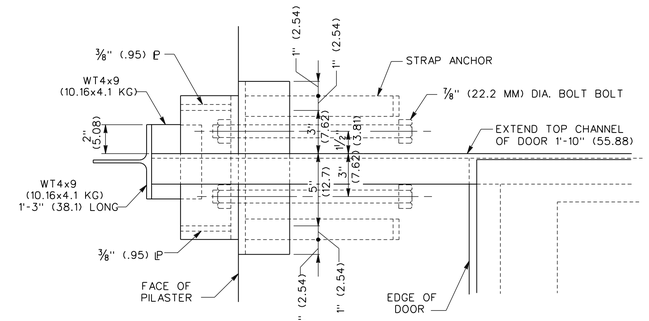

ELEVATION

DETAIL 5
NOT TO SCALE S-5|S-6

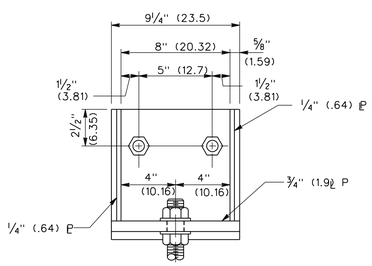

ELEVATION

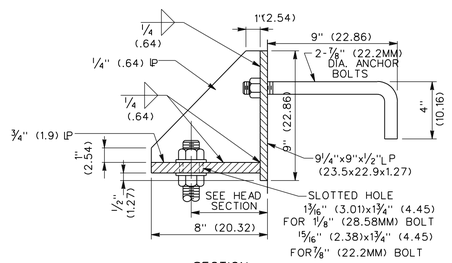

SECTION

TRACK SUPPORT BRACKET
TYPE I
NOT TO SCALE

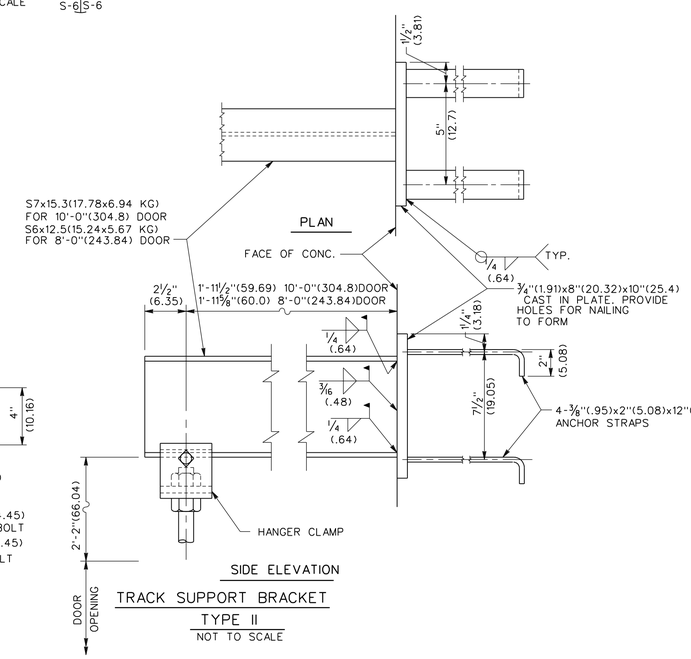

SIDE ELEVATION

TRACK SUPPORT BRACKET
TYPE II
NOT TO SCALE

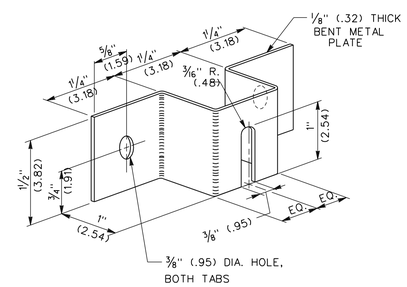

DRAWING NOT TO SCALE

SYMBOL	DESCRIPTION	DATE	APR

DESIGNED BY: TCP
DATE: 06-27-07
DWN BY: TCP
SUBMITTED BY: Philip J. DINELLO PROJECT ARCHITECT DEV
CHK BY: KGO
FILE NO.: AF0707 ZA-SB06SE

US Army Corps of Engineers Transatlantic Programs Center

ANA REGIONAL BRIGADE
PAKTIKA, AFGHANISTAN

AMMO SUPPLY POINT

DETAILS

SHEET REFERENCE NUMBER:
ZA
S-6

$(getvar, "dwgprefix")$(getvar, "dwgname")$(edtime, 0, MON DD"", YYYY - H:MMam/pm)

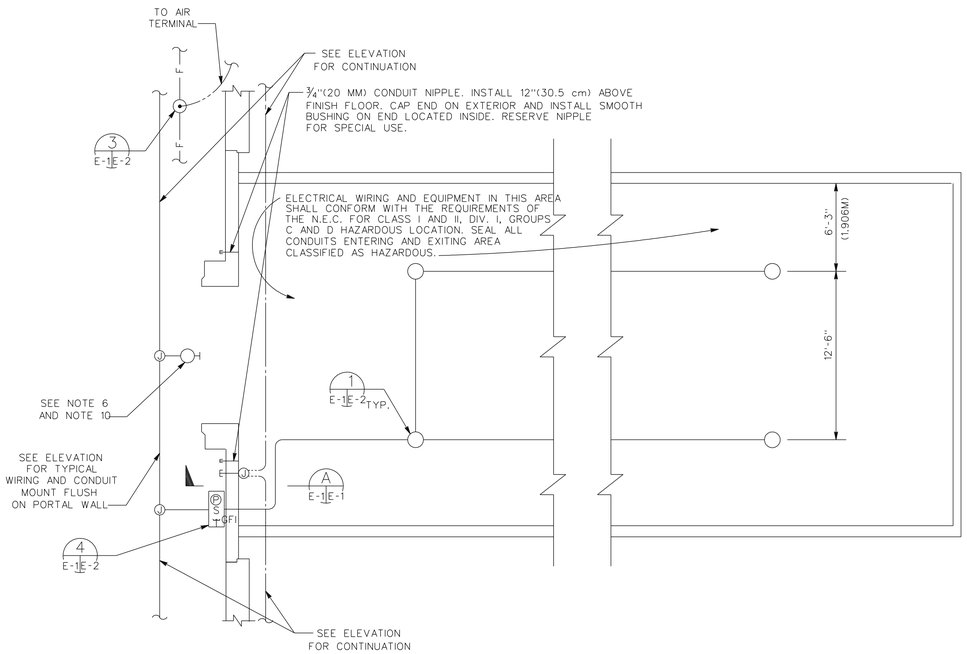

PLAN

SCALE: NTS

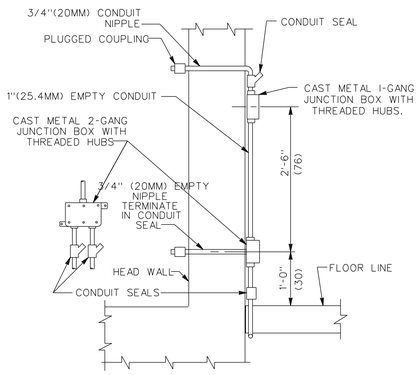

SECTION A E-1 E-1

SCALE: NTS

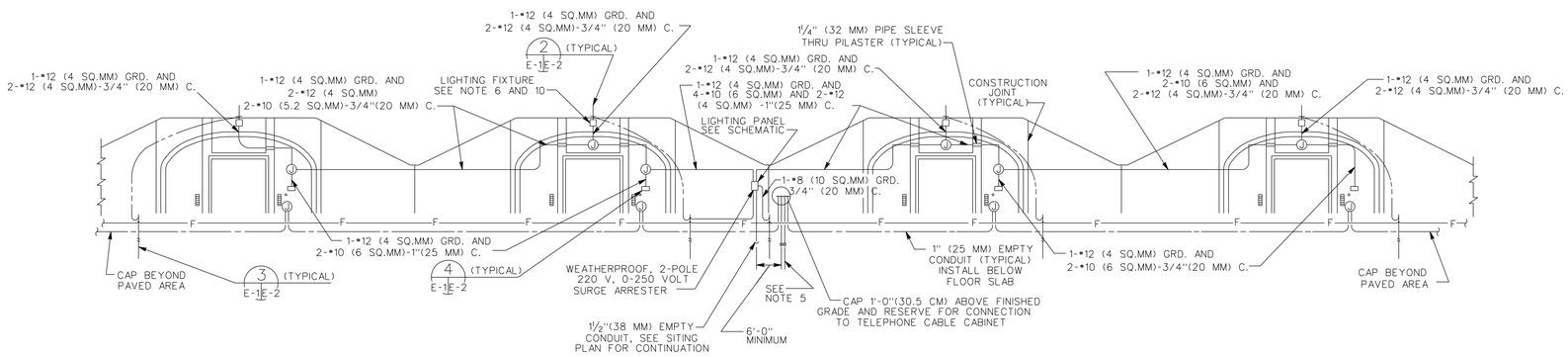

ELEVATION

NOT TO SCALE

LEGEND (FOR DRAWINGS E-1 AND E-2)

- WALL MOUNTED EXTERIOR LIGHTING FIXTURE. SEE NOTE 6.
- CEILING MOUNTED LIGHTING FIXTURE. SEE DETAIL 1 E-1 E-2
- 3-GANG OUTLET BOX WITH SINGLE GANG COVER FOR PILOT LAMP,SINGLE POLE SWITCH AND DUPLEX CONVENIENCE OUTLET WITH GROUND FAULT INTERRUPTER ALL SUITABLE FOR USE OUTDOORS.
- JUNCTION BOX, CAST METAL WITH THREADED WALLS OR HUBS.
- CONDUIT RUN CONCEALED BELOW GRADE OR FLOOR SLAB. NOTE: ANY CONDUIT RUN NOT OTHERWISE INDICATED SHALL BE 3/4" (20 MM) AND CONTAIN THREE NO. 12 AWG. (4 SQ.MM) WIRES. A GREATER NUMBER OF WIRES ARE SHOWN WITH CROSS LINES AS FOLLOWS:
  - GROUND CONDUCTOR

  THE LONG CROSS LINE INDICATES THE IDENTIFIED GROUNDED NEUTRAL CONDUCTOR AND THE SHORT CROSS LINES INDICATES THE PHASE CONDUCTORS. UNLESS OTHERWISE INDICATED, ALL CONDUCTORS ARE NO. 12 AWG (3.3SQ.MM)
- CONDUIT RUN INSTALLED EXPOSED ON WALLS OR CEILING. WIRING SHALL BE SAME AS IN NOTE FOR CONCEALED COINDUIT RUN.
- AUXILIARY EMPTY CONDUIT RUN CONCEALED BELOW GRADE OR FLOOR SLAB SIZED AS INDICATED.
- CONDUIT TERMINATED WITH A PLUGGED COUPLING.
- VALVE TYPE SECONDARY SURGE ARRESTER (L.A.)
- LIGHTNING AIR TERMINAL. EXTEND 4'-0" (61) ABOVE PROTECTED OBJECT.
- GROUND ROD
- —F— FACILITY COUNTERPOISE SYSTEM, NO. 1/0 AWG. (50 SQ.MM) BARE COPPER WIRE.
- DOWN CONDUCTOR FROM AIR TERMINAL, NO. 2 AWG. (35 SQ.MM) BARE COPPER WIRE.
- 2'-6" (76.2) UNLESS OTHERWISE INDICATED, THE PARENTHETIC METRIC DIMENSIONS SHOWN ARE IN CENTIMETERS AND ARE MINIMUM ACCEPTABLE.

NOTES: (FOR DRAWINGS E-1 AND E-2)

1. HOLES SHALL NOT BE MADE IN CONCRETE ARCH ROOFING FOR INSTALLATION OF ELECTRICAL WORK.
2. THE CONDUIT SYSTEM ON THE FRONT OF STRUCTURE IS TO HAVE SUPPORTS SPACED NOT MORE THAN 8'-0" (243.8). SUPPORTS ON EACH SIDE OF CONSTRUCTION JOINTS SHALL NOT EXCEED 5'-0" (152).
3. RUNNING THREAD COUPLING CONNECTIONS ARE NOT PERMITTED FOR THE RIGID CONDUIT SYSTEMS.
4. FOR THE 220 VOLT, SINGLE PHASE, 2-WIRE SERVICE, INSTALL A 1½" (38.1 MM) EMPTY CONDUIT 2'-0" (61) BELOW FINISHED GRADE AND TERMINATE WITH A PLUGGED COUPLING NOT LESS THAN 5'-0" (152) BEYOND PAVED AREA.
5. FOR THE INSTALLATION BY OTHERS OF A TELEPHONE TYPE CABLE, INSTALL 2 1½" (38.1 MM) CONDUITS WITH PULL WIRE, 2'-0" (61) BELOW FINISHED GRADE AND TERMINATE WITH A PLUGGED COUPLING NOT LESS THAN 5'-0" (152) BEYOND PAVED AREA.
6. THE LIGHTING FIXTURE SHALL BE FIXTURE TYPE AS INDICATED. ALL EXTERIOR LIGHTS SHALL BE CONNECTED ON THE SAME CIRCUIT TO FACILITATE CONTROL AT THE PANEL BOARD. HOWEVER, NOT MORE THAN EIGHT FIXTURES SHALL BE CONNECTED TO ANY ONE 20 AMP CIRCUIT.
7. THE NUMBER OF INTERIOR LIGHTING FIXTURES VARIES, DEPENDING ON INTERNAL LENGTH OF MAGAZINE, AS FOLLOWS:

LENGTH OF MAGAZINE	NO. OF FIXTURES
20'-24' (6.1-7.3 M)	4
25'-36' (7.6-11 M)	4
37'-48' (11.3-14.6 M)	4
49'-60' (14.9-18.3 M)	6
61'-89'(18.6-27.1 M)	8

8. INSTALL AN INTERMEDIATE AIR TERMINAL OVER STRUCTURE WHERE INTERIOR LENGTH OF MAGAZINE EXCEEDS 48 FEET (SEE DRAWING E-2).
9. DRAWINGS E-1 AND E-2 SHOW ELECTRICAL PROVISIONS FOR SIMILAR STEEL ARCH MAGAZINE. NOTES 7 THRU 9 ARE NEW, AS ARE FIXTURE MOUNTING, GROUND FAULT INTERRUPTER AND AIR TERMINAL PROVISIONS (FOR MAGAZINES LONGER THAN 50 FT.).
10. BRACKET LIGHT FIXTURE AWAY FROM FRONT WALL TO PROVIDE LIGHT ON MAGAZINE DOOR.

SYMBOL	DESCRIPTION	DATE	APR

DESIGNED BY: XXX
DATE: 06-27-07
DWN BY: XXX
SUBMITTED BY: R. CREWAL CHIEF, ELDG SYSTEMS
CHK BY: XXX
FILE NO.: AF0707 ZA-EP01PN

US Army Corps of Engineers Transatlantic Programs Center

ANA REGIONAL BRIGADE
PAKTIKA, AFGHANISTAN

AMMO SUPPLY POINT

ELECTRICAL PLAN

SHEET REFERENCE NUMBER:
ZA
E-1

$(getvar, "dwgprefix")$(getvar, "dwgname")$(edtime, 0, MON DD", " YYYY - HHMMam/pm)

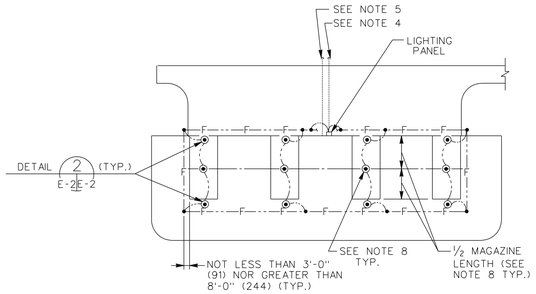

SITING PLAN
NOT TO SCALE

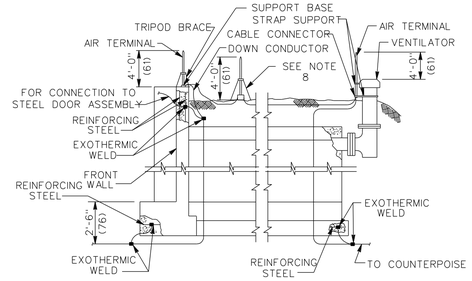

DETAIL 2
NOT TO SCALE E-2 E-2

CONNECTED LOAD PER UNIT			
LIGHTING (WATTS)		RECEPTACLES (WATTS)	TOTAL (WATTS) ① ②
EXTERIOR	INTERIOR		
250	806	200	1256

① ASSUMING A 60 FT. (1829) MAGAZINE

② MAX. LOAD - 4 BAYS - 90 FT. (2745) MAGAZINE : 2.81 KVA

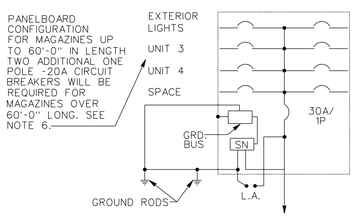

220V-2W WITH GROUND BUS, SURFACE MOUNTED IN WEATHERPROOF ENCLOSURE WITH A MAIN CIRCUIT BREAKER (CKT BKR). ALL CKT BKR'S RATED 20A-1P, EXCEPT AS NOTED OTHERWISE. SOLID NEUTRAL BUS SHALL BE CONNECTED TO THE GROUND BUS ONLY IN THE PANELBOARD. BOND PANELBOARD ENCLOSURE TO GROUND BUS.

LIGHTING PANELBOARD SCHEMATIC

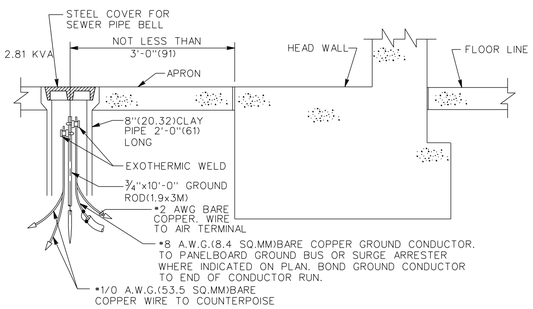

DETAIL 3
NOT TO SCALE E-1 E-2

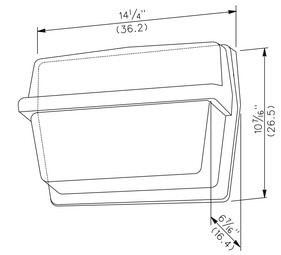

(SEE NOTE 10)

WEATHERPROOF INCANDESCENT WALL MOUNTING FIXTURE CONSISTING OF A THERMAL, SHOCK-RESISTING, CRYSTAL PRISMATIC GLASS, ASYMMETRIC ALZAK REFLECTOR AND A DIECAST ALUMINUM HOUSING. THE FIXTURE SHALL BE PREWIRED AND EQUIPPED WITH A DOUBLE CONTACT BAYONET BASE SOCKET FOR A 250 WATT IODINE-QUARTZ, SINGLE ENDED LAMP. THE FIXTURE SHALL BE SUITABLE FOR MOUNTING DIRECTLY ON A WALL WITH CONDUIT ENTRY ON EACH SIDE OR TO A RECESSED OUTLET BOX STUD.

THE FIXTURE SHALL REQUIRE NO TOOLS FOR LAMP REPLACEMENT.

THE CANDLEPOWER VALUES INDICATED ARE TO BE CONSIDERED MINIMUM VALUES OBTAINED WITH STANDARD LAMPS AT RATED VOLTAGE.

PHOTOMETRIC DISTRIBUTION
STANDARD FIXTURE POSITION

A = LATERAL DISTRIBUTION IN 77° CONE
B = VERTICAL DISTRIBUTION THROUGH 45° LATERAL

LAMP : 250 Q/CL QUARTZ IODINE
LUMENS : 5000
WATTS : 250
BULB : T-4
VOLTS : 220
TEST DISTANCE: 25 FEET (762)

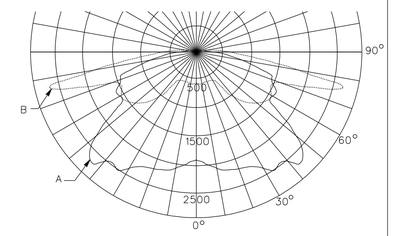

DISTRIBUTION DATA		
ANGLE DEGREES	CANDLEPOWER A	CANDLEPOWER B
0	1900	480
5	1945	540
10	-	540
15	2190	535
20	-	560
25	2255	560
30	-	565
35	2550	580
40	2500	770
45	2715	1150
50	2460	1325
55	1965	1425
60	1550	1550
65	1610	1475
70	1435	1500
75	1435	2450
77	-	2715
80	920	2020
85	720	770
90	425	440
95	315	310
105	160	220
115	110	-
125	80	-
135	50	-
145	30	-
155	20	-
165	10	-
175	10	-
180	10	-

NOMINAL LAMP DATA

LAMP : F96T12/CW/SHO
WATTS : 212
CURRENT : 1.5 AMPS
LUMENS : 13250
TEST DISTANCE : -40 FT. (-1220)

TEST RESULTS

AVG. MAX. CANDLEPOWER : 779
BEAM LUMENS : 7854
BEAM EFFICIENCY : 59.3%
TOTAL EFFICIENCY : 62.1%
HOR. BEAM SPREAD : 150°
VERT. BEAM SPREAD : 136°

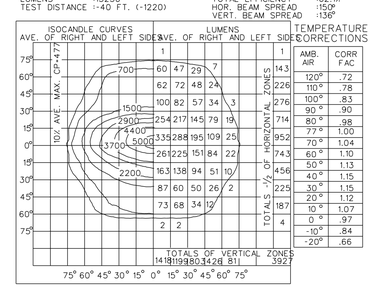

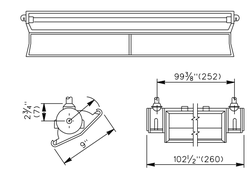

(SEE NOTE 10)

FLUORESCENT FLOODLIGHT FIXTURE SUITABLE FOR OUTDOOR INSTALLATION SHALL UTILIZE A 96 INCH (244) RAPID START 1500 MA LAMP (F96T12/CW/SHO). THE FIXTURE SHALL CONSIST OF AN ALZAK ALUMINUM REFLECTOR WITH SPECULAR FINISH, SPRING LOADED PLUNGER TYPE SILVERPLATED CONTACT SOCKETS WITH NEOPRENE BOOTS AND SHALL HAVE PROVISION FOR AIMING THROUGHOUT 360 DEGREES ROTATION WITH GRADUATED AIMING DIAL. DOOR ASSEMBLY SHALL CONSIST OF A STAINLESS STEEL FRAME WITH A CLEAR ACRYLIC PLASTIC COVER, SPONGE NEOPRENE WEATHERPROOF GASKET WITH STAINLESS STEEL HINGES AND LATCHES. HOUSING SHALL BE FINISHED WITH GREEN ACRYLIC BAKED ENAMEL PAINT OR OTHER APPROVED COLOR. THE FIXTURE SHALL BE EQUIPPED WITH A MOUNTING HUB ASSEMBLY AT EACH END. A THERMALLY PROTECTED WEATHERPROOF BALLAST, NOT INTEGRAL WITH THE FIXTURE SHALL BE PROVIDED. THE BALLAST SHALL BE RATED FOR -20° F (-29C) STARTING IN COLD WEATHER OPERATION. THE CANDLEPOWER VALUES INDICATED ARE TO BE CONSIDERED MINIMUM VALUES OBTAINED WITH STANDARD LAMPS AT RATED VOLTAGE.

NOTE:

REFER TO DRAWING E-1 FOR NOTES AND LEGEND.

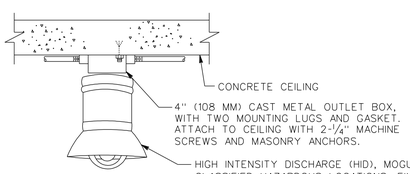

HIGH INTENSITY DISCHARGE (HID), MOGUL BASE INDUSTRIAL FIXTURE FOR NEC CLASSIFIED HAZARDOUS LOCATIONS. FIXTURE SHALL BE COMPLETE WITH ONE 70 WATT HPS. ANSI CODE S62MF-70 LAMP AND ONE AUXILIARY, 100 WATT; D.C. BASE QUARTZ LAMP FIXTURE SHALL BE SINGLE FUSED. FIXTURE CIRCUITRY SHALL BE ARRANGED TO PROVIDE POWER TO THE AUXILIARY LAMP DURING THE IGNITION PERIOD OF THE HPS LAMP. FIXTURE SHALL CONFORM TO UL 844 FOR USE IN NEC DIVISION 1 AND 2 LOCATION.

DETAIL 1
NOT TO SCALE E-1 E-2

GROUNDING TYPE DUPLEX RECEPTACLE, EQUIPPED WITH GROUND FAULT CIRCUIT ITERRUPTION PROVISIONS, SHALL BE PROVIDED. THE AMPERE AND VOLTAGE RATING SHALL BE SUITABLE FOR THE MAXIMUM AMPERE DEMAND CALCULATED AND THE VOLTAGE RATING OF THE SERVICE AVAILABLE AT THE SPECIFIC MAGAZINE. GENERALLY THE RECEPTACLE SHALL BE RATED AT NOT LESS THAN 20 AMPERES AT 125 VOLTS, ALTERNATING CURRENT AND RATED TO TRIP WHEN A GROUND-FAULT CURRENT EXCEEDS 20 MILLIAMP.

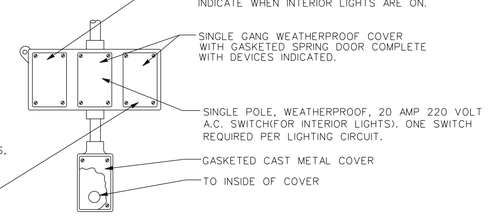

DETAIL 4
NOT TO SCALE E-1 E-29

SYMBOL	DESCRIPTION	DATE	APR

DESIGNED BY: XXX
DATE: 06-27-07
DWN BY: XXX
SUBMITTED BY: R. CRESWELL CHIEF, DIV. BLDG SYSTEMS
CHK BY: XXX
FILE NO.: AF0707ZA-EP02DT

US Army Corps of Engineers Transatlantic Programs Center

ANA REGIONAL BRIGADE
PAKTIKA, AFGHANISTAN

AMMO SUPPLY POINT

ELECTRICAL DETAILS

SHEET REFERENCE NUMBER:
ZA
E-2

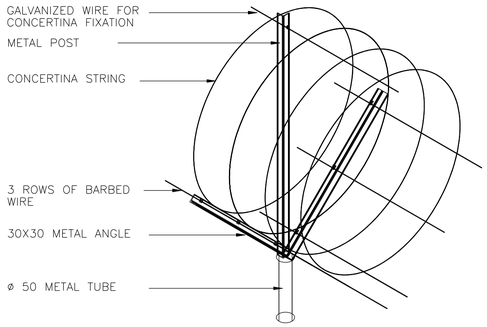

C ISOMETRIC

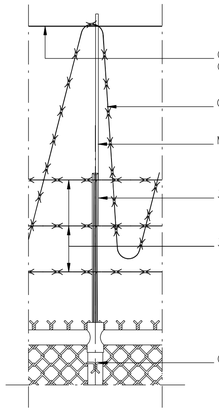

B ELEVATION

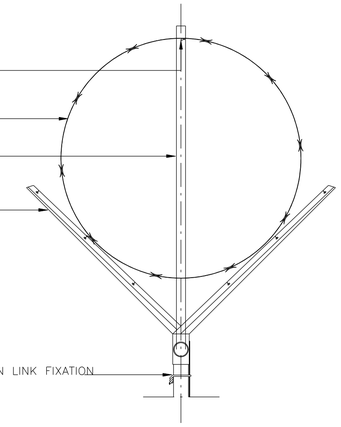

A SECTION

4 BARBED WIRE & CONCERTINE DETAIL

SW-C905 SCALE: N.T.S.

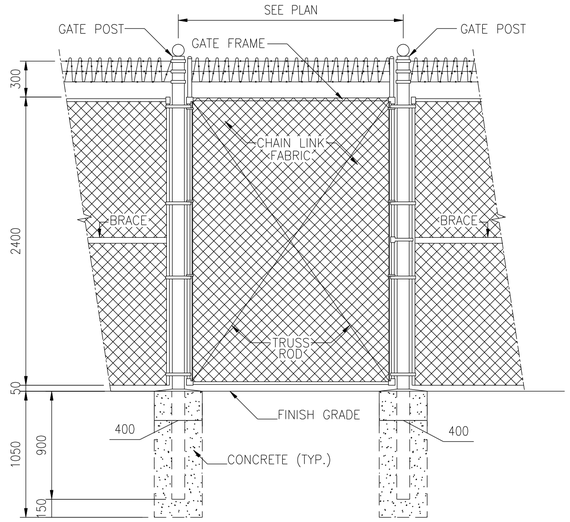

3 FENCE SINGLE SWING GATE

SW-C905 SCALE: 1:25

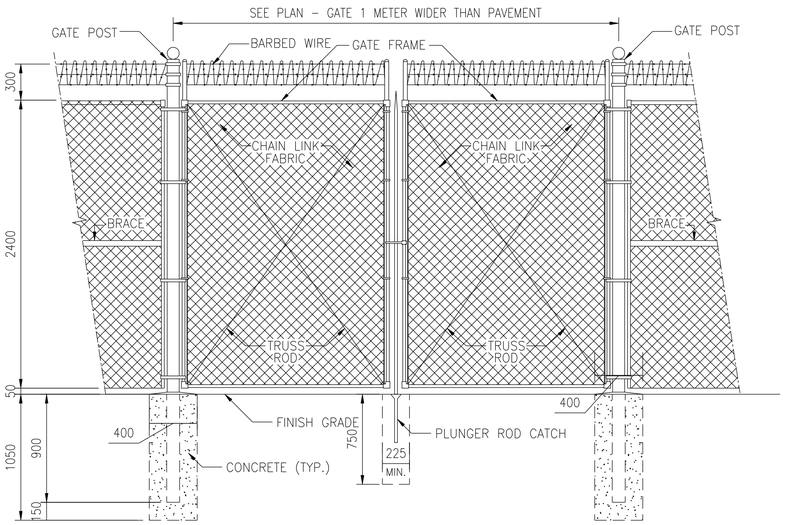

2 FENCE DOUBLE SWING GATE

SW-C905 SCALE: 1:25

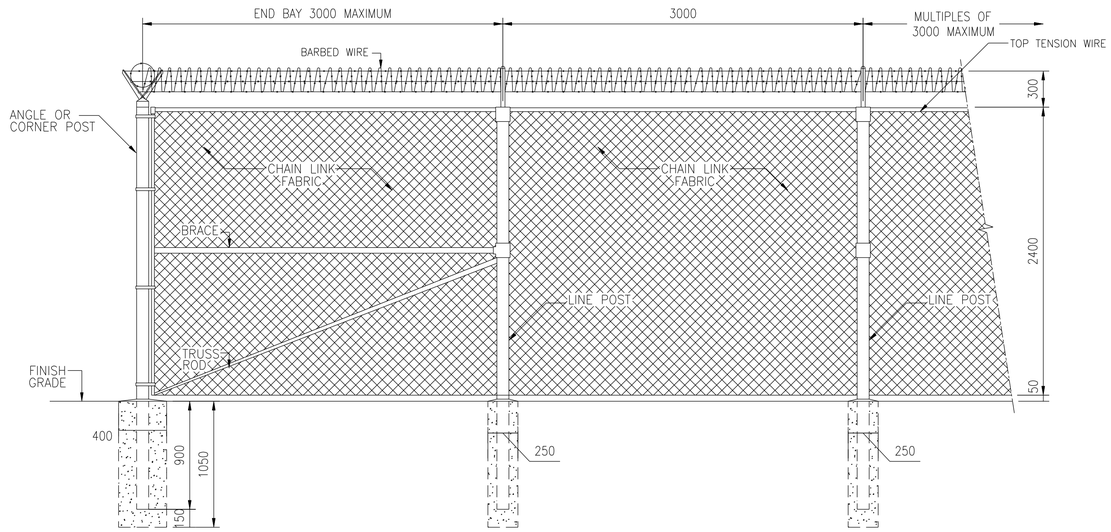

1 FENCE DETAILS

SW-C905 SCALE: 1:25

1 .50 0 1 1.5
1:25

SYMBOL	DESCRIPTION	DATE	APR

DESIGNED BY: YSK
DWN BY: JSG
CHK BY: PLD
DATE: 06-27-07
SUBMITTED BY: [redacted]
FILE NO.: AF0707 SW-C905

US Army Corps of Engineers Transatlantic Programs Center

ANA REGIONAL BRIGADE
PAKTIKA, AFGHANISTAN

FENCE DETAILS

SHEET REFERENCE NUMBER:
SW-C905

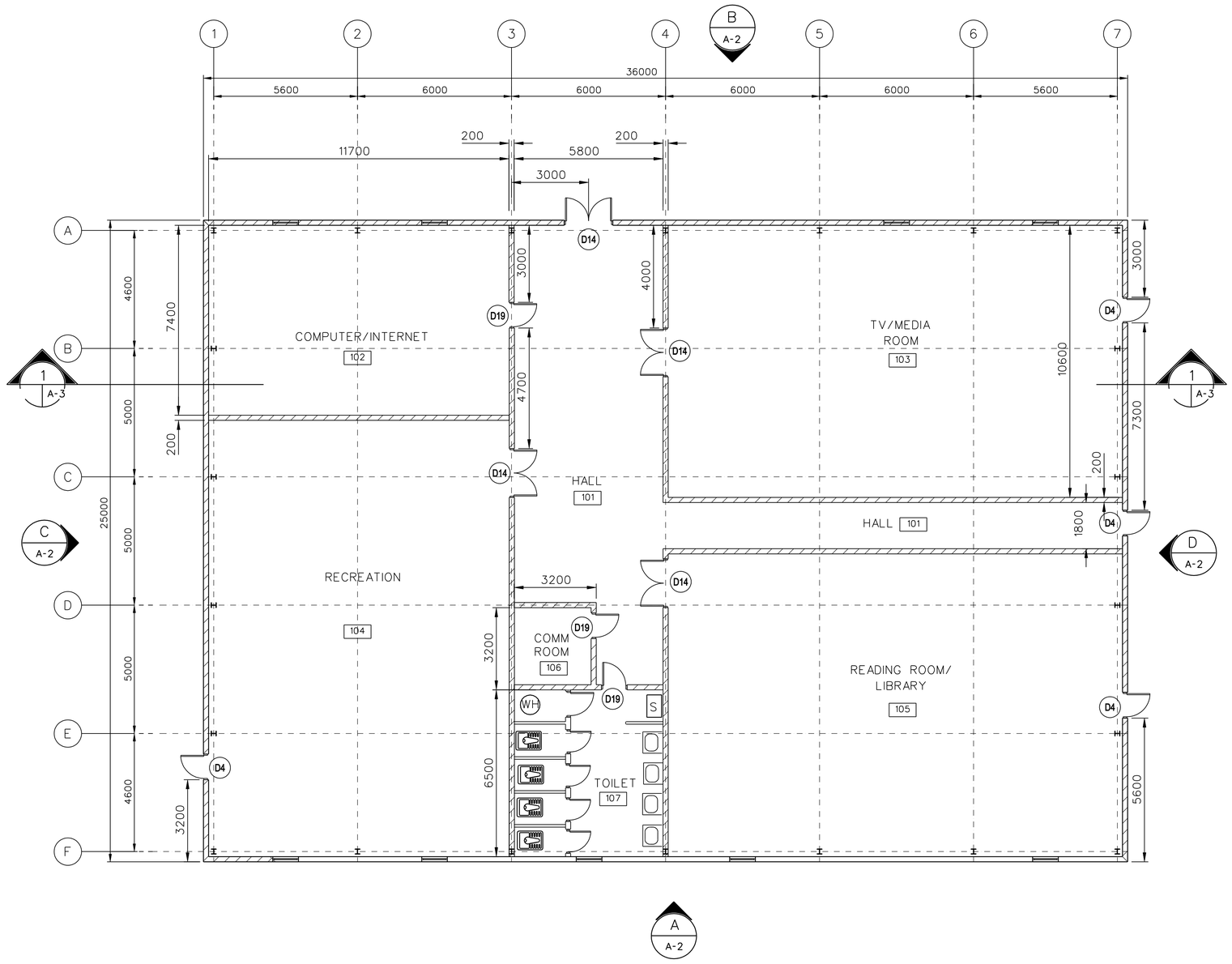

COMMUNITY CENTER FLOOR PLAN
SCALE=1:100

GROSS AREA : 900 SM

FINISHING SCHEDULE LEGEND

FLOOR

F1	CONCRETE SEALER
F2	300MMX300MM TERRAZZO TILE
F3	CERAMIC TILE

WALL

W1	WHITE PAINTED PLASTER/GYSUM BOARD
W2	150MMX150MM GLAZED CERAMIC TILES UP TO 2000MM AFF

CEILING

C1	SUSPENDED ACOUSTICAL TILE
C2	MOISTURE RESISTANT GYPSUM

WALL SYMBOLS

CMU 2800MM HIGH

CMU LOW HEIGHT WALL +/- 2000 MM WITH CERAMIC TILE FINISH

CJ — CMU CONTROL JOINT

FINISHING SCHEDULE

Room No.	Usage	Floor	Wall	Ceiling
101	HALL	F2	W1	C1
102	COMPUTER/ INTERNET	F2	W1	C1
103	TV/MEDIA	F2	W1	C1
104	RECREATION	F2	W1	C1
105	READING/ LIBRARY	F2	W1	C1
106	COMM.	F1	W1	C1
107	TOILET	F3	W1, W2	C2

NOTES:

1- ALL WALLS ARE CMU UNLESS NOTED OTHERWISE.
2- ALL WALL TERMINATE AT CEILING UNLESS NOTED OTHERWISE.
3- INTERNAL PARTITION TOILET SHALL BE 2000MM HEIGHT.
4- ALL DIMENSIONS ARE TO FACE OF CMU UNLESS NOTED OTHERWISE.
5- ALL VERTICAL DIMENSIONS & LEVELS ARE FROM GROUND FLOOR FINISHED SLAB. THIS ELEVATION IS +0000.
6- SEE DRAWING CO-A-05 & CO-A-06 FOR OPENING SCHEDULES & TYPES.
7- SEE DRAWING CO-A-02, CO-A-03 & CO-A-04 FOR STANDARD DETAILS.
8- SEE CIVIL DRAWINGS FOR BUILDING COORDINATES AND FINISH FLOOR ELEVATION.
9- SEE STRUCTURAL DRAWINGS FOR LOCATION OF BUILDING CONTROL AND SEISMIC JOINTS.
10- TOTAL AREA OF BUILDING IS 900 SM.
11- SEE SHEET CO-E-01 FOR LIGHTING LEGEND.

NOTE:

ORIENT BUILDING ON SITE SUCH THAT TOILETS ARE ON A NORTH/SOUTH ACCESS.

1 0 1 2 3 4 5 6 7 8 9
1:100

UNLESS OTHERWISE NOTED, LINEAR DIMENSIONS SHOWN ARE IN MILLIMETERS.

SYMBOL	DESCRIPTION	DATE
		APR

DESIGNED BY: YSK
DATE: 06 APR 07
DWN BY: ABB
SUBMITTED BY: PHILIP L. DINELLO, CHIEF, PDT PACKETS DEM
CHK BY: PLD
FILE NO.: AF0707 BB-AR01PN

US Army Corps of Engineers Transatlantic Programs Center

ANA REGIONAL BRIGADE
PAKTIKA, AFGHANISTAN
COMMUNITY CENTER
FLOOR PLAN

SHEET REFERENCE NUMBER:
BB
A-1

6/26/2007
h:\projects\afghanistan\af0707\af0707bb\arc\AF0707BB-AR01PN.dwg

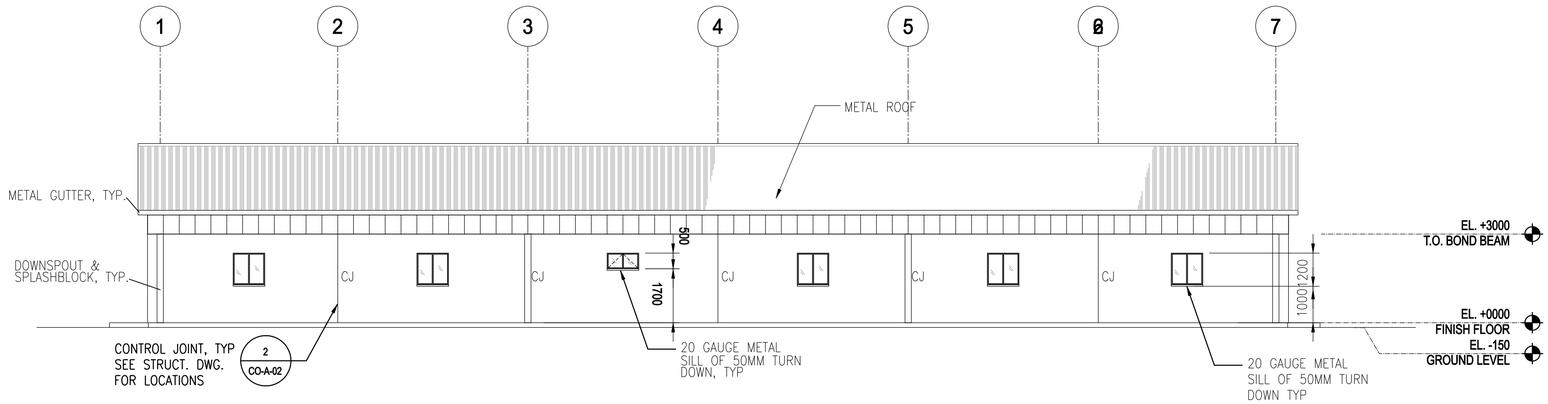

A FRONT ELEVATION

SCALE: 1:100

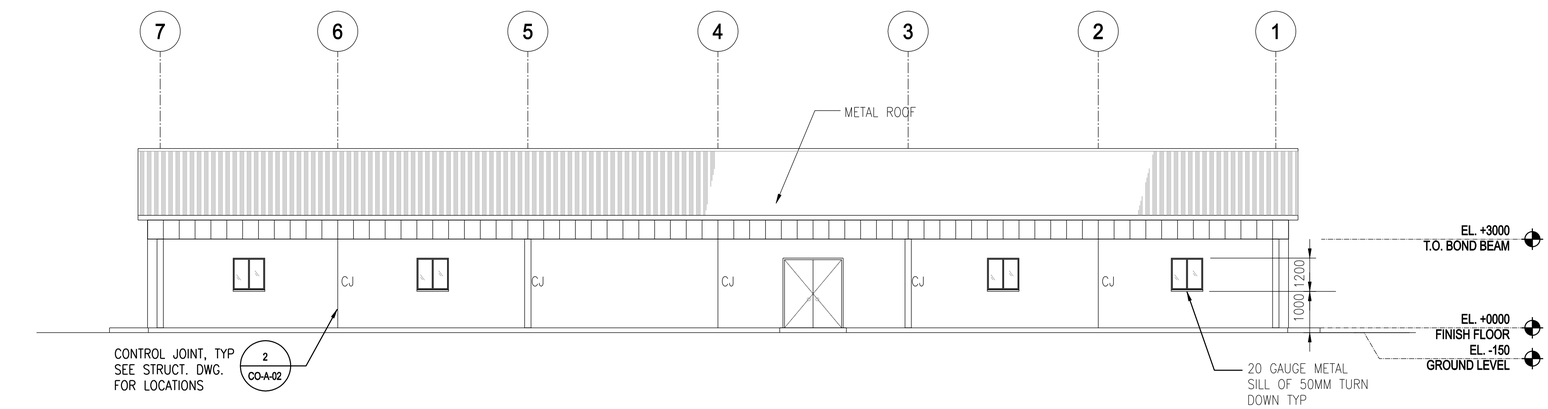

B REAR ELEVATION

SCALE: 1:100

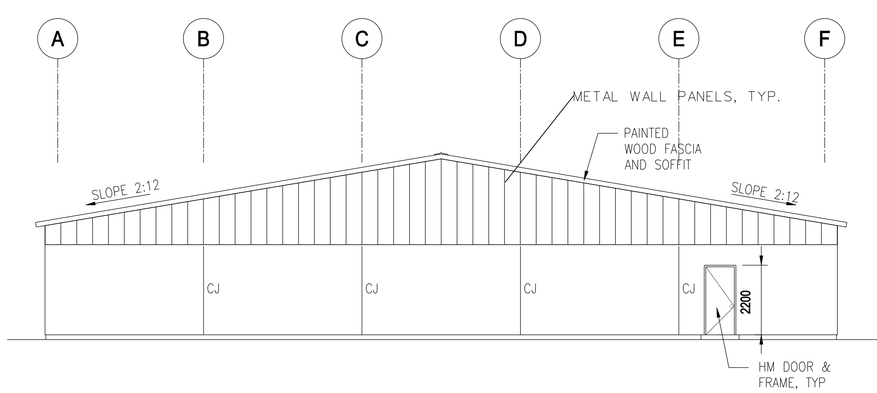

C SIDE ELEVATION

SCALE: 1:100

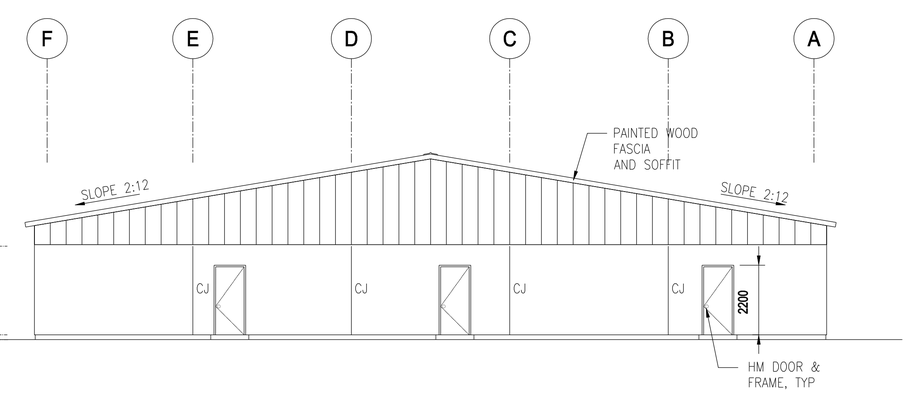

D SIDE ELEVATION

SCALE: 1:100

1 0 1 2 3 4 5 6 7 8 9
1:100

UNLESS OTHERWISE NOTED, LINEAR DIMENSIONS SHOWN ARE IN MILLIMETERS.

SYMBOL	DESCRIPTION	DATE	APR

DESIGNED BY: YSK
DATE: 06-27-07
DWN BY: ABB
SUBMITTED BY: PHILIP L. DINELLO, CHIEF, PDT PACKETES DEM
CHK BY: PLD
FILE NO.: AF0707 BB-AR02EL

US Army Corps of Engineers Transatlantic Programs Center

ANA REGIONAL BRIGADE
PAKTIKA, AFGHANISTAN
COMMUNITY CENTER
ELEVATIONS

SHEET REFERENCE NUMBER:
BB
A-2

6/26/2007
h:\projects\afghanistan\af0707\af0707bb\arc\AF0707BBAR02EL.dwg

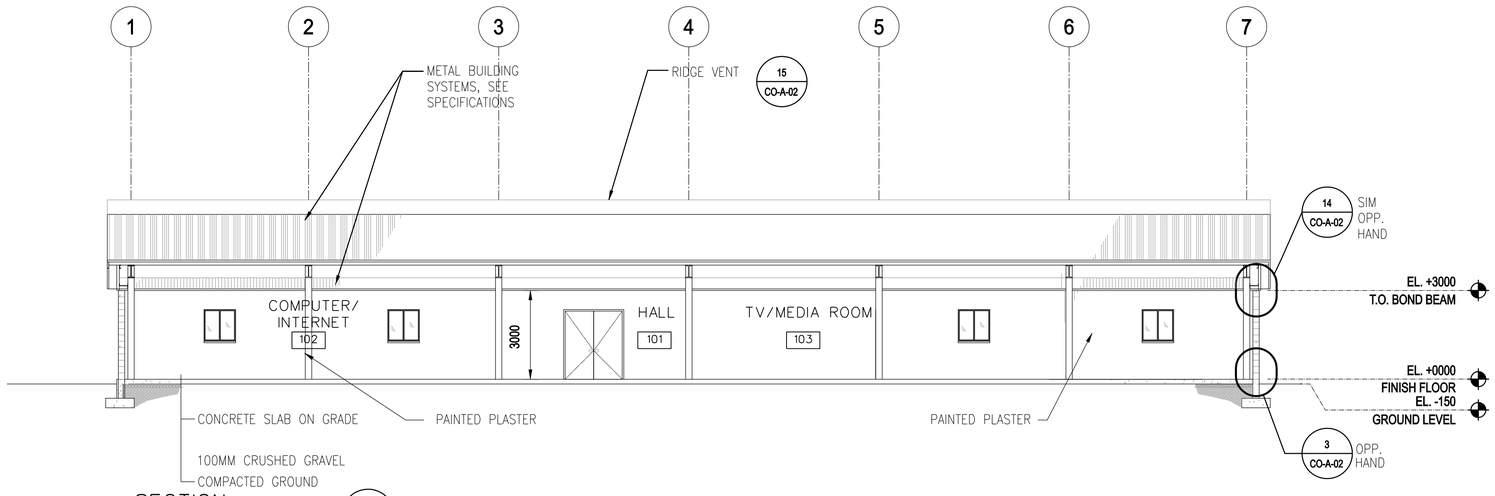

SECTION 1 A-1 A-3
SCALE = 1:100

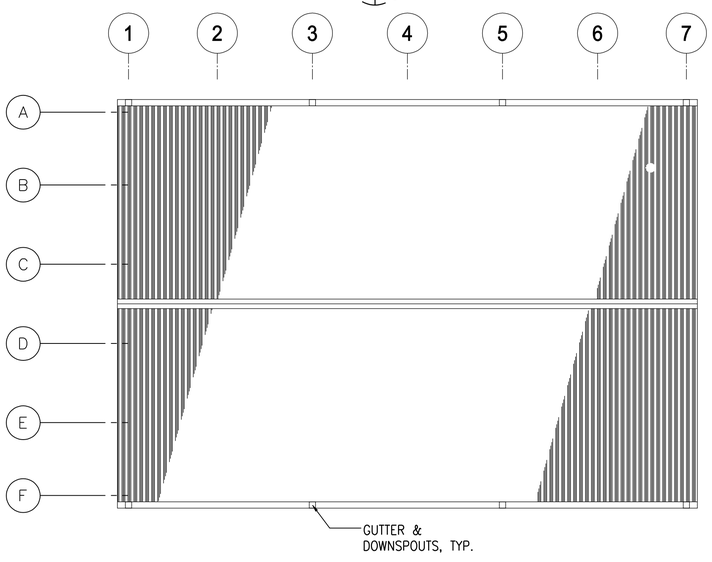

ROOF PLAN
SCALE = 1:200

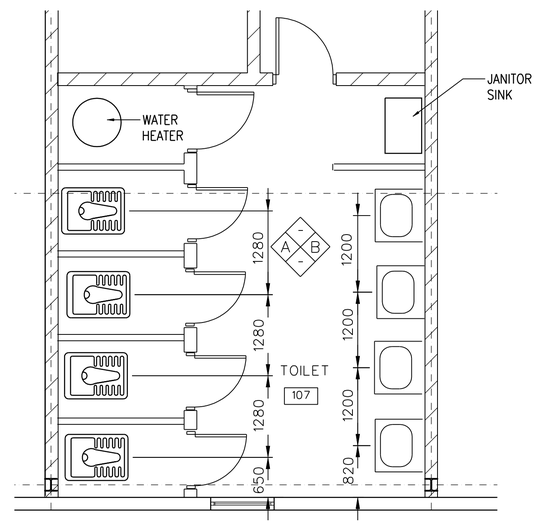

TOILET 107 ENLARGED PLAN 2 A-1 A-3
SCALE = 1:50

TOILET ACCESSORY SCHEDULE

NO.	DESCRIPTION
1	MIRROR 600X900X6MM GLASS
2	STAINLESS STEEL TOILET PAPER HOLDER

NOTE:

- SEE SHEET CB-A-01 FOR FINISH SCHEDULE

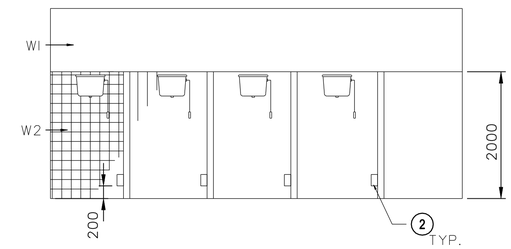

TOILET ELEVATION A A-3 A-3
SCALE = 1:50

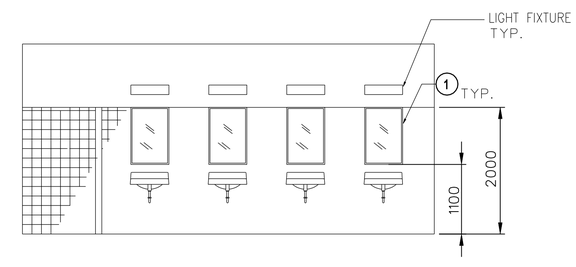

TOILET ELEVATION B A-3 A-3
SCALE = 1:50

1 0 1 2 3 4
1:50
1 0 1 2 3 4 5 6 7 8 9
1:100
5 0 5 10 15
1:200

UNLESS OTHERWISE NOTED, LINEAR DIMENSIONS SHOWN ARE IN MILLIMETERS.

SYMBOL	DESCRIPTION	DATE	APR

DESIGNED BY: YSK
DATE: 06-27-07
DWN BY: ABB
SUBMITTED BY: PHILIP L. DINELLO, CHIEF, PDT PACKETES DEM
CHK BY: PLD
FILE NO.: AF0707 BB-AR03SE

US Army Corps of Engineers Transatlantic Programs Center

ANA REGIONAL BRIGADE
PAKTIKA, AFGHANISTAN
COMMUNITY CENTER
SECTION, ROOF PLAN, DETAILS

SHEET REFERENCE NUMBER:
BB
A-3

6/26/2007
h:\projects\afghanistan\af0707\af0707bb\arc\AF0707BB-AR03SE.dwg

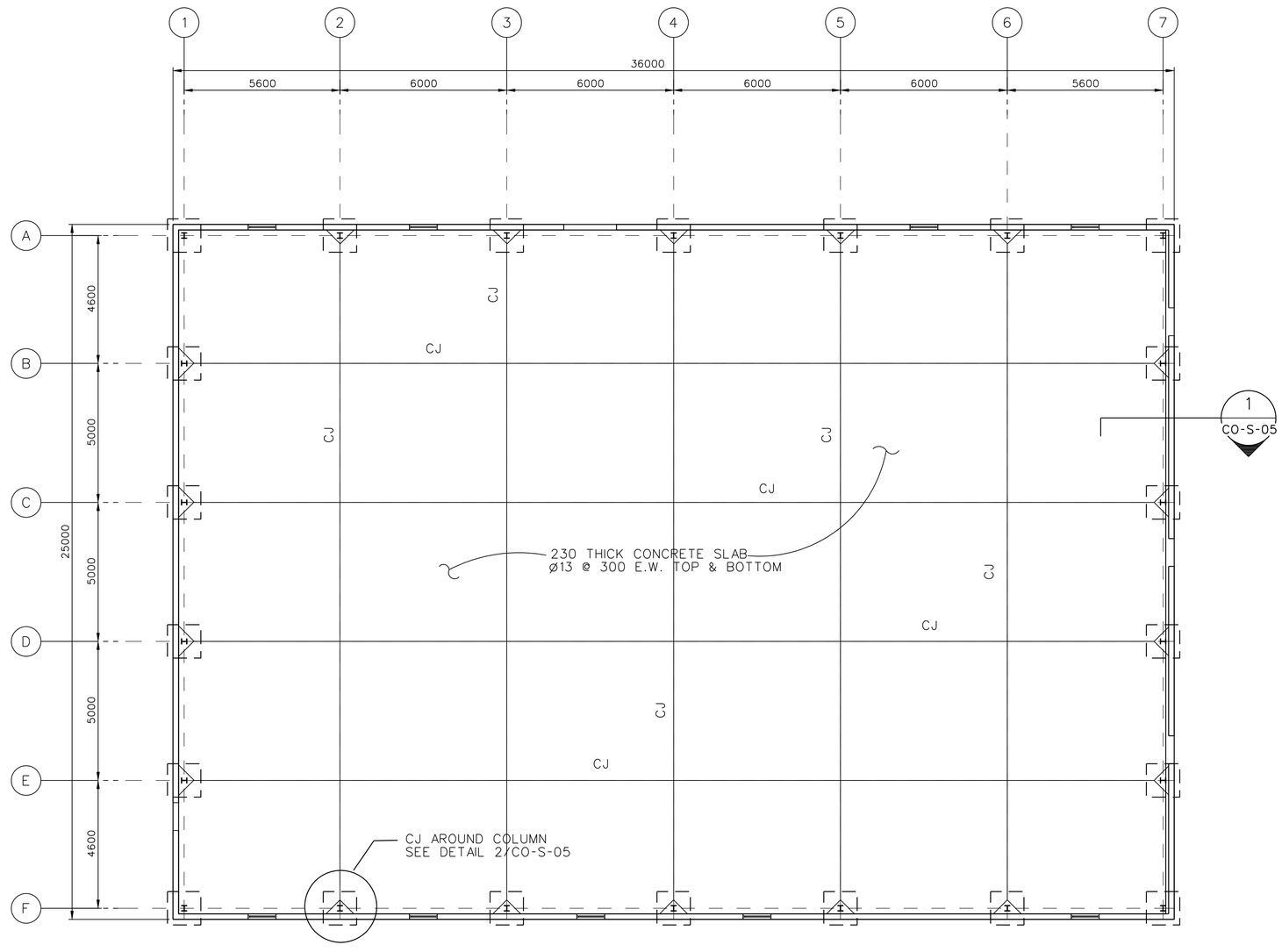

FOUNDATION / FLOOR PLAN

SCALE = 1:100

NOTES:

1. OUT-TO-OUT BUILDING DIMENSIONS SHOWN ARE MINIMUMS. THE CONTRACTOR SHALL COORDINATE COLUMN (METAL BLDG), BASE PLATE (GROUT, IF ANY), ANCHOR BOLTS AND CONCRETE MAT SLAB DIMENSIONS TO SUIT "METAL BUILDING SYSTEM" SELECTED.

2. CONTRACTOR SHALL DESIGN THE FOUNDATIONS TO SUPPORT THE METAL BUILDING SYSTEM AND THE EXTERIOR 3.0 METER HIGH SKIRT WALL

3. REFER TO ARCHITECTURAL DRAWINGS FOR BUILDING SIZE AND OTHER REQUIREMENTS. PRE-ENGINEERED BUILDING SHALL CONFORM TO THE REQUIREMENTS OF THE METAL BUILDING MANUFACTURER ASSOCIATION - MBMA.

4. DESIGN LOADS (SERVICE)

LOADS:

ROOF = 98 KG/SQ. M (20 PSF)

FLOOR = 1225 KG/SQ. M (250 PSF)

FORKLIFT: AXLE LOAD CAPACITY OF 2722 Kg (6000 LBS)

WIND VELOCITY 125 KPH, EXPOSURE C AND IMPORTANCE FACTOR I=1.0.

EARTHQUAKE:

SEISMICITY: Ss=1.65g AND S_1 =0.75g USE GROUP I, SITE CLASS D, IMPORTANCE FACTOR I=1.0.

5. MATERIALS:

CONCRETE: 28 MPa CYLINDER STRENGTH AT 28 DAYS

REINFORCING: ASTM A615 GRADE 60

WELDED WIRE FABRIC: ASTM A185

6. FOR CJ AND CJT DETAILS SEE GENERAL DETAILS.

7. ALLOWABLE SOIL BEARING CAPACITY 4900 KSM (1000 PSF).

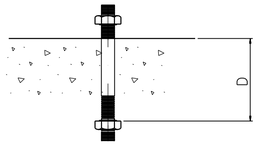

COLUMN ANCHOR BOLTS

NTS

D — MIN. 300 FOR 32 DIA. BOLTS

NOTES:

1. ANCHOR BOLT REQUIREMENTS GIVEN ON THIS SHEET ARE MINIMUM ALLOWED.

2. PROVIDE 32 DIA. ANCHOR BOLTS AT COLUMNS ALONG SIDE WALLS.

3. DIMENSION D IS BASED ON DESIGN REQUIREMENTS FOR UPLIFT USING ASTM A36 ANCHOR BOLTS.

5 0 5 10 15
1:200

UNLESS OTHERWISE NOTED, LINEAR DIMENSIONS SHOWN ARE IN MILLIMETERS.

SYMBOL	DESCRIPTION	DATE	APR

DESIGNED BY: TCP
DATE: 06-27-07
DWN BY: TCP
SUBMITTED BY: PHILIP L. DINELLO, CHIEF, PDT PACIFICTIES DEN
CHK BY: KGO
FILE NO.: AF0707 BB-SB01PN

US Army Corps of Engineers Transatlantic Programs Center

ANA REGIONAL BRIGADE
PAKTIKA, AFGHANISTAN
COMMUNITY CENTER
FOUNDATION AND FLOOR PLAN

SHEET REFERENCE NUMBER:
BB
S-1

6/26/2007
h:\projects\afghanistan\af0707\af0707BB\str\af0707bb-SB01PN.dwg

NOTES:

1. FOR STANDARD DETAILS SEE DWG. NO. (CO-M01,02,03 & 04).
2. FOR CONTROLS DIAGRAMS SEE DWG. NO. (BB-M-03).
3. FOR LEGNED AND ABRECIATIONS SEE DWG. NO. (CO-M-06).

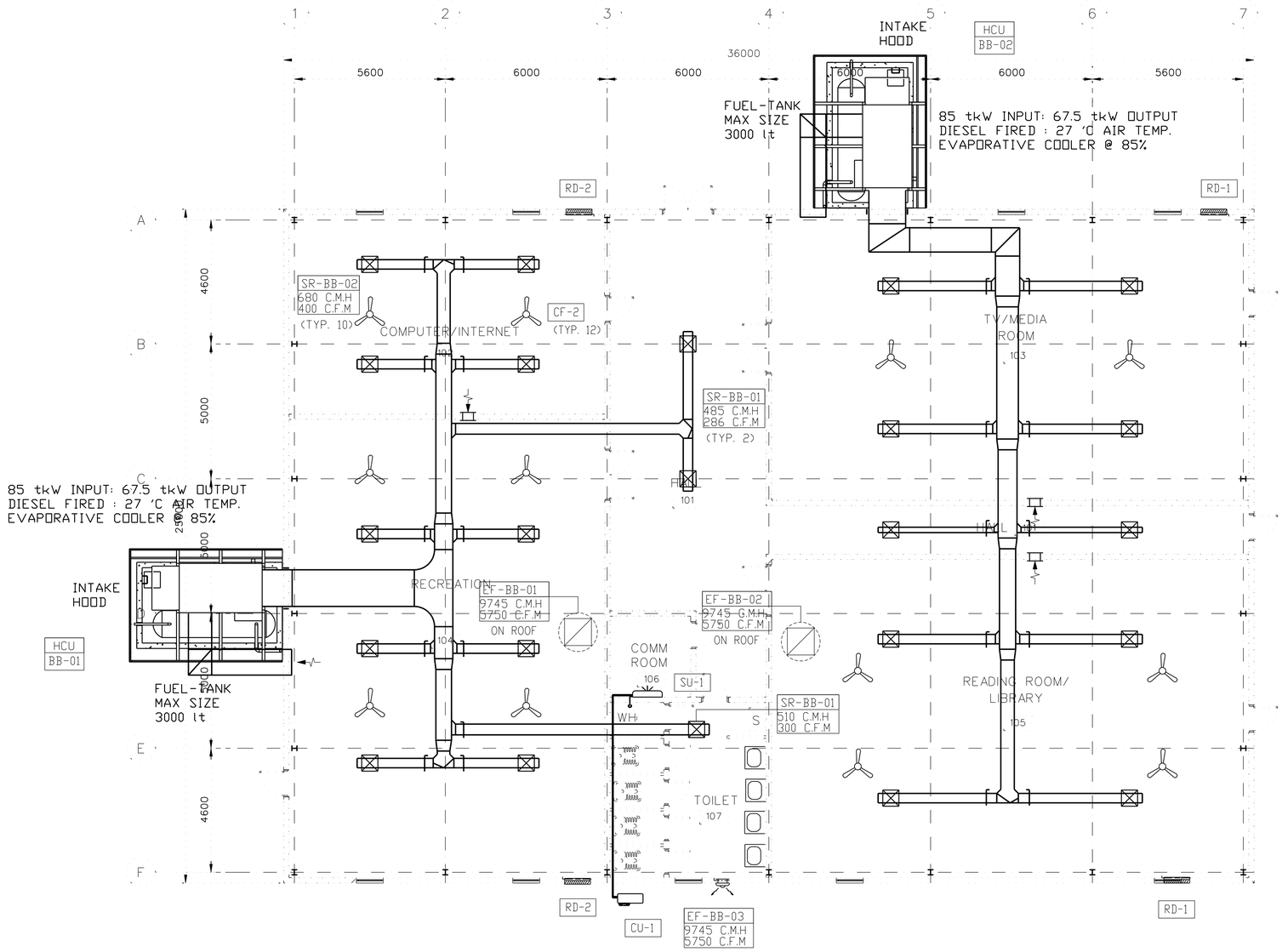

UNLESS OTHERWISE NOTED, LINEAR DIMENSIONS SHOWN ARE IN MILLIMETERS.

SYMBOL	DESCRIPTION	DATE	APR

DESIGNED BY: JMR
DATE:
DWN BY: JMR
SUBMITTED BY: RAVI GREWAL, CHIEF, PDT BLDG. SYSTEMS
CHK BY: RG
FILE NO.: BB-MH01PN

US Army Corps of Engineers Transatlantic Programs Center

ANA REGIONAL BRIGADE
PAKTIKA, AFGHANISTAN
COMMUNITY CENTER
HVAC PLAN

SHEET REFERENCE NUMBER:
BB
M-1

6/26/2007
h:\Projects\Afghanistan\af0707\af0707BB\mec\AF0707BB-MH01PN.dwg

(PACKAGED) HEATING-COOLING UNIT (HCU)

UNIT NUMBER	OUTSIDE AIR		TOTAL CMH	FAN SECTION		EVAPORATIVE WATER COOLER						FILTER SECTION				DIESEL HEATER SECTION			ELECTRICAL DATA			CONTROL DIAGRAM	INTERLOCKED EQUIPMENT	REMARKS
	COOLING CMH	HEATING CMH		EXTERNAL SP (MM-WG)	KW	PUMP		OUTDOOR AIR		SUPP. AIR DB (DEG C)	ADIABATIC EFF. (%)	FACE VELOCITY MPS	EFF. %	AIR PRESSURE DROP (MM-WG)		CAPACITY KW	TEMP. RISE °C	EFF. %	VOLTS	PHASE	HERTZ			
						NOM. WATTS	BLEED-OFF (LPM)	DB (DEG C)	WB (DEG C)					INT	FNL									
HCU-BB-01	8,275	3,190	8,275	4.74	3.73	80	1.26	36.1	16.7	11.7	85	7.39	30	58.4	1.26	61.4	25	85	380	3	50			
HCU-BB-02	8,275	3,190	8,275	7.23	3.73	80	1.26	36.1	16.7	11.7	85	7.39	30	58.4	1.26	61.4	25	85	380	3	50			

1. MANUFACTURER SHALL PROVIDE NECESSARY TRANSFORMERS ON ALL UNITS TO MEET ELECTRICAL CONTROL REQUIREMENTS.
2. PROVIDE INTAKE HOOD WITH BIRD SCREEN AND 50 MM WASHABLE FILTER.

EXHAUST FAN SCHEDULE

EF-BB-XX
XXXX C.M.H
XXXX C.F.M

EQUIPT. NO.	LOCATION	AIR QUANTITY CMH	S.P. MM-W.G.	FAN TYPE	ELECTRICAL DATA				SOUND POWER dBa	REMARKS
					HP	VOLTS	PH	HZ		
EF-BB-01	ROOF MOUNTED	7,645	6.4	CENTRIFUGAL	3/4	380	3	50	69	INTERLOCK W/ HCU-BB-01
EF-BB-02	ROOF MOUNTED	7,645	6.4	CENTRIFUGAL	3/4	380	3	50	69	INTERLOCK W/ HCU-BB-02
EF-BB-03	EXTERIOR WALL	475	12.7	CENTRIFUGAL	1/4	220	1	50	53	WALL MOUNTED W/GRAVITY BACK DRAFT DAMPER INTERLOCK W/ RTU-1

SUPPLY DIFFUSER AND REGISTER SCHEDULE

EQUIPMENT No.	TYPE	CMH RANGE	FACE SIZE (MM)	NECK SIZE (MM)	THROW	REMARKS
SR-1	SUPPLY REGISTER	400-600	350x250	250x150	DOUBLE DEFLECTION	EXPOSED DUCT/WALL INSTALLATION
SR-2	SUPPLY REGISTER	600-1000	350x300	300x200	DOUBLE DEFLECTION	EXPOSED DUCT/WALL INSTALLATION

1. SOUND POWER LEVELS NOT TO EXCEED NC-35.
2. ALL DIFFUSERS AND REGISTERS TO BE PROVIDED WITH OPPOSED BLADE DAMPERS (OBD) ADJUSTABLE FROM THE FACE.

CEILING FAN SCHEDULE (CF)

UNIT NUMBER	TYPE (NOTE 1)	FAN DIAMETER	MAX WATTS	ELECTRICAL DATA			REMARKS
				VOLTS	PHASE	HERTZ	
CF-2	A	1422 mm (56 in)	65	220	1	50	

NOTES:-

1- (A) WITHOUT LIGHT FIXTURE
2- BOTTOM OF FAN MOUNTING HEIGHT = MINIMUM 2500mm A.F.F
3- PROVIDE WITH REMOTE WALL MOUNTED, ON-OFF SWITCH LOCATED ON ELECTRICAL DRAWINGS.

SPLIT SYSTEM AIR CONDITIONING HEAT PUMP SCHEDULE (SU/CU)

UNIT NO.	CAPACITY * (KW)		AIR QUANTITY CMH	ELECTRICAL DATA				REMARKS
	COOLING	HEATING		KW	VOLTS	PH	HZ	
SU-1 CU-1	1.5	1.5	615	.9	220	1	50	HIGH WALL MOUNTED INDOOR UNIT

* MINIMUM EQUIPMENT CAPACITY AS RATED AT 36 °C DB/16.7 °C WB (SUMMER OUTDOOR TEMPERATURE)
AT -12.8 °C DB (WINTER OUTDOOR TEMPERATURE)
AT 2133 M ELEVATION

RELIEF DAMPER (RD) SCHEDULE

UNIT NUMBER	SIZE (MM)	FLOW (CMH)	△ P (MM-WG)	REMARKS
RD-BB-01	300 X 600	1500 CMH (882 CFM)	2.8	
RD-BB-02	300 X 400	1250 CMH (735 CFM)	2.8	

SYMBOL	DESCRIPTION	DATE	APR

DESIGNED BY: JMR
DATE: 06-27-07
DWN BY: JMR
SUBMITTED BY: RAVI GREWAL CHIEF, PDT BLDG. SYSTEMS
CHK BY: RMS
FILE NO.: AF0707 BB-MH02SC

US Army Corps of Engineers Transatlantic Programs Center

ANA REGIONAL BRIGADE
PAKTIKA, AFGHANISTAN
COMMUNITY CENTER
HEATING VENTILATION AND AIR-CONDITIONING SCHEDULES

SHEET REFERENCE NUMBER:
BB
M-2

6/26/2007
h:\projects\afghanistan\af0707\af0707bb\mec\AF0707BBMH02sc.dwg

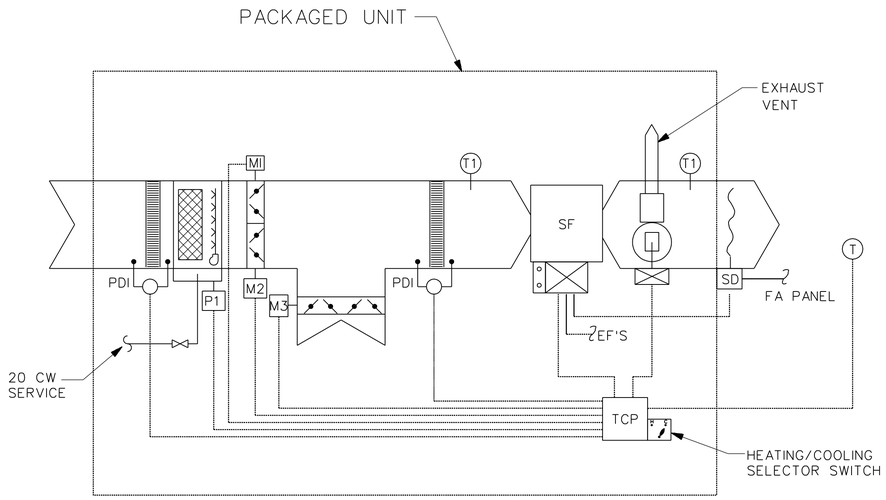

SET POINT

HTG.	CLG.
21°C	1. 23°C 2. 25°C

TEMPERATURE CONTROL DIAGRAM
(HCU-BB-01, HCU-BB-02)

PACKAGED HEATING-COOLING UNIT -SEQUENCE OF OPERATION

START-UP
THE SUPPLY FAN (SF) SHALL BE STARTED MANUALLY BY PLACING THE HAND-OFF-AUTO SWITCH AT THE CONTROL PANEL IN THE HAND POSITION. IN THE AUTO POSITION A PROGRAMMABLE TIME CLOCK SHALL START/STOP THE FAN. DURING THE OCCUPIED TIME, THE FAN SHALL OPERATE CONTINUOUSLY.

OPERATING MODES
HEATING OR COOLING MODE SELECTION SHALL BE CONTROLLED OFF A HEATING-COOLING SELECTION SWITCH ON THE CONTROL PANEL. THE UNIT SHALL OPERATE AS A 100% OA COOLING UNIT BY PLACING THE MODE SWITCH IN THE COOLING MODE. IN THE HEATING MODE THE UNIT SHALL PROVIDE MINIMUM FRESH AIR VENTILATION AND EXHAUST MAKE-UP AIR.

DAMPERS
COOLING MODE: THE MINIMUM OUTSIDE AIR (OA) DAMPER (M1) SHALL BE INTERLOCKED TO OPEN WHEN THE FAN IS ENERGIZED. THE TWO POSITION DAMPER (M2), AND RETURN AIR (RA) DAMPER (M3) SHALL BE CONTROLLED BY THERMOSTAT (T1). WHEN THERMOSTAT T1 IS BELOW THE SET POINT 1 (23 C) DAMPER M2 SHALL BE CLOSED AND M3 SHALL BE IN THE OPEN POSITION. WHEN THERMOSTAT T1 IS ABOVE THE SET POINT 1 (23 C) DAMPER M2 SHALL BE OPEN AND DAMPER M3 SHALL BE IN THE CLOSED POSITION.

HEATING MODE: THE OUTSIDE AIR DAMPER (M1) AND RETURN AIR DAMPER (M3) SHALL OPEN WHEN THE FAN IS ENERGIZED AND CLOSE WHEN THE FAN IS DEENERGIZED. OA DAMPER M2 SHALL STAY CLOSED.

FILTER
PRESSURE DIFFERENTIAL INDICATOR (PDI) PROVIDES LOCAL INDICATION OF PRESSURE DROP ACROSS THE FILTER. ON A RISE IN PRESSURE DROP TO ITS SET POINT, PRESSURE DIFFERENTIAL SWITCH SHALL TURN ON THE DIRTY FILTER ALARM LIGHT AT THE CONTROL PANEL.

TEMPERATURE CONTROL
HEATING (WINTER) MODE: THE DIESEL OIL HEATER (DH) SHALL BE STAGED BY A SPACE THERMOSTAT (T) TO CONTROL THE SUPPLY AIR TEMPERATURE OFF THE UNIT. EVAPORATIVE COOLER CONTROLS SHALL BE LOCKED OUT DURING THE WINTER MODE.
COOLING (SUMMER) MODE: HEATER CONTROLS SHALL BE LOCKED OUT DURING THE SUMMER MODE. THE EVAPORATIVE COOLING WATER PUMP (P1) SHALL BE STAGED BY THE SPACE THERMOSTAT (T) TO MAINTAIN THE SPACE TEMPERATURE SET POINT 2 (25 C).

FAN INTERLOCKS
THE SMOKE DETECTOR (SD) SHALL BE INTERLOCKED TO STOP THE SUPPLY FAN (SF) IN THE EVENT OF SMOKE IN THE SUPPLY DUCT. THE SMOKE DETECTOR SHALL BE CONNECTED TO THE BUILDING FIRE ALARM PANEL.

THE EXHAUST FANS (EF) 1 AND 2 INDICATED IN THE HCU UNIT SCHEDULE SHALL BE INTERLOCKED TO RUN WHEN THE TWO POSITION DAMPER (M2) IS IN THE OPEN POSITION. EXHUAST FAN 3 SHALL BE INTERLOCKED TO RUN WHEN THE SUPPLY FAN IS IN OPERATION.

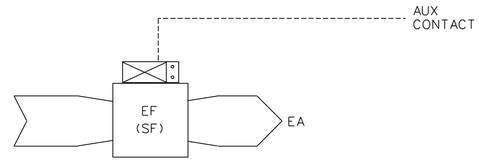

CO TEMPERATURE CONTROL DIAGRAM E-1
CO

CO
E-1 SEQUENCE OF OPERATION

START-UP
THE EXHAUST (SUPPLY) FAN SHALL BE STARTED MANUALLY BY PLACING THE HAND-OFF-AUTO (H-O-A) SWITCH IN THE HAND POSITION. IN THE AUTO POSITION, AN AUXILIARY CONTACT IN THE INTERLOCKED EQUIPMENT MOTOR STARTER SHALL START THE FAN.
ST
ST

SYMBOL	DESCRIPTION	DATE	APR

DESIGNED BY: JMR
DATE: 06-27-07
DWN BY: JMR
SUBMITTED BY: RAVI GREWAL, CHIEF, PDT BLDG. SYSTEMS
CHK BY: RMS
FILE NO.: AF0707 BB-MH03D1

US Army Corps of Engineers
Transatlantic Programs Center

ANA REGIONAL BRIGADE
PAKTIKA, AFGHANISTAN
COMMUNITY CENTER
TEMPERATURE CONTROL DIAGRAM

SHEET REFERENCE NUMBER:
BB
M-3

6/26/2007
h:\projects\afghanistan\af0707\af0707bb\mec\AF0707BBMH03D1.dwg

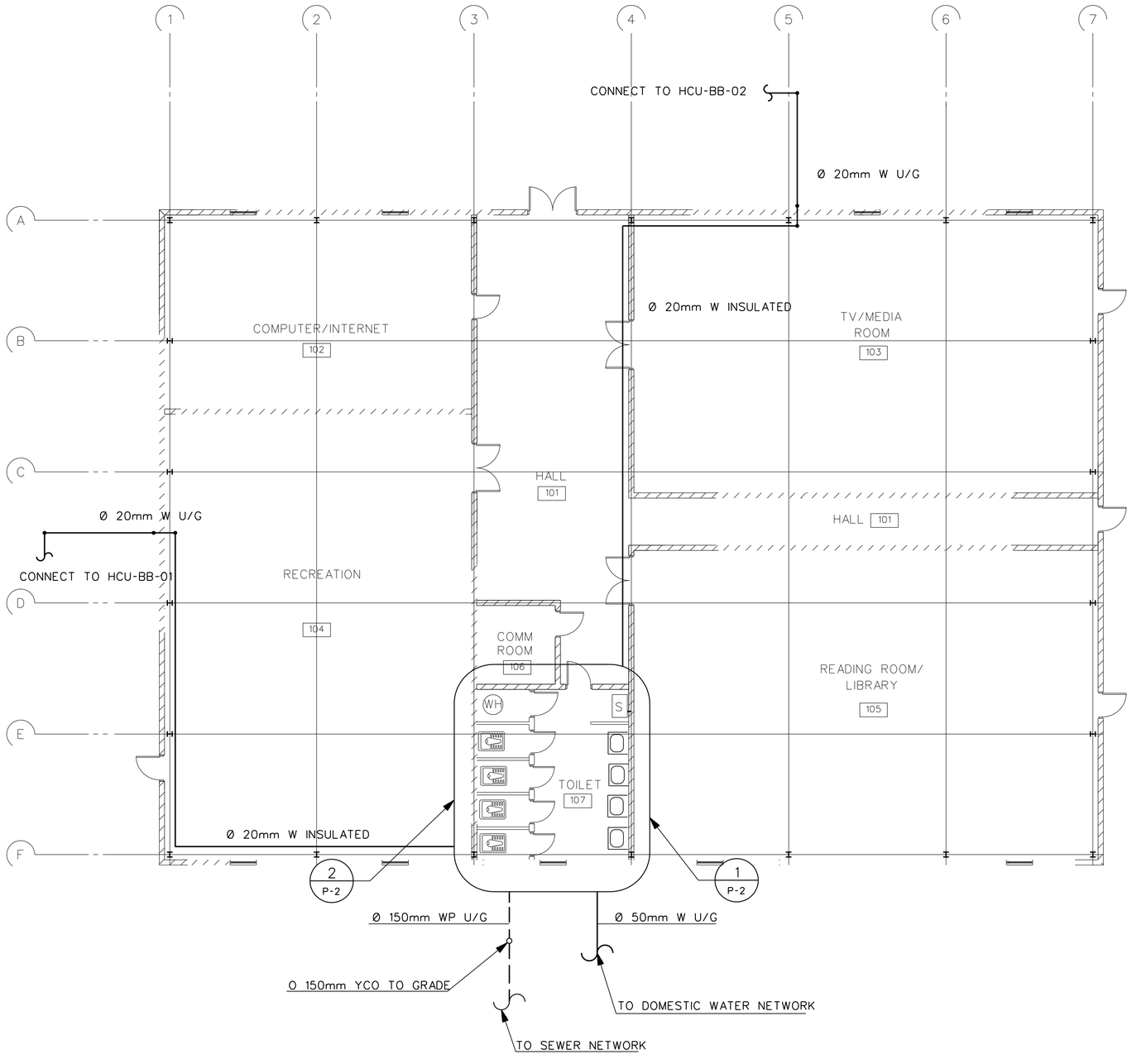

PLUMBING FLOOR PLAN

SCALE = 1:100

1 0 1 2 3 4 5 6 7 8 9
1:100

UNLESS OTHERWISE NOTED, LINEAR DIMENSIONS SHOWN ARE IN MILLIMETERS.

SYMBOL	DESCRIPTION	DATE	APR

DESIGNED BY: JMR
DATE: 06-27-07
DWN BY: JMR
SUBMITTED BY: RAVI GREWAL, CHIEF, PDT BLDG. SYSTEMS
CHK BY: RMS
FILE NO.: AF0707 BB-MP01PN

US Army Corps of Engineers
Transatlantic Programs Center

ANA REGIONAL BRIGADE
PAKTIKA, AFGHANISTAN

COMMUNITY CENTER

PLUMBING LAYOUT

SHEET REFERENCE NUMBER:
BB
P-1

6/26/2007
h:\projects\afghanistan\af0707\af0707bb\mec\AF0707BB-MP01PN.dwg

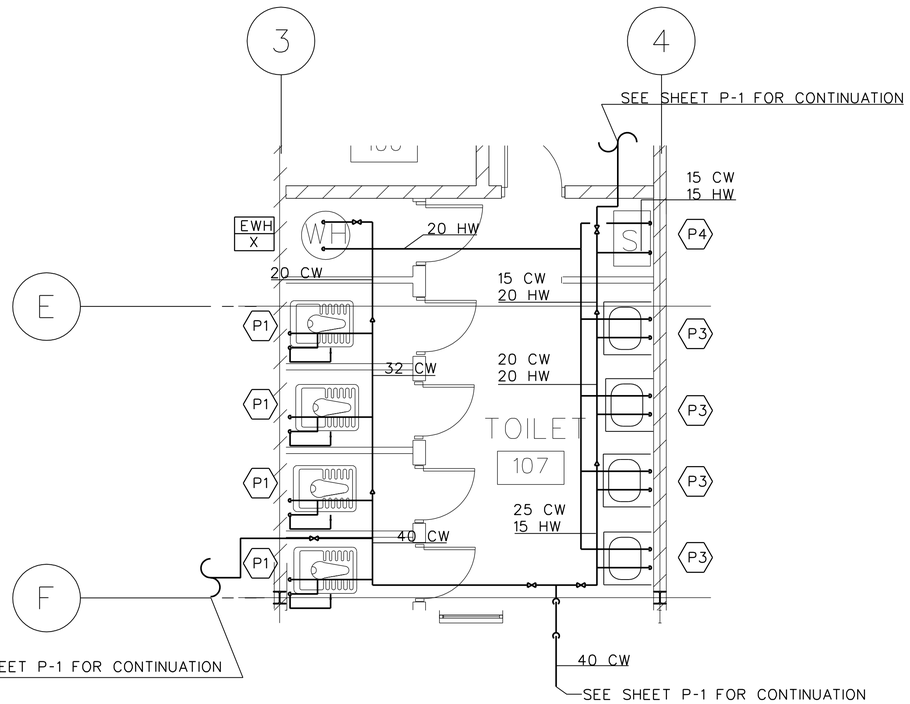

DOMESTIC PIPING PLAN (1 / P-1 P-2)
SCALE - NTS

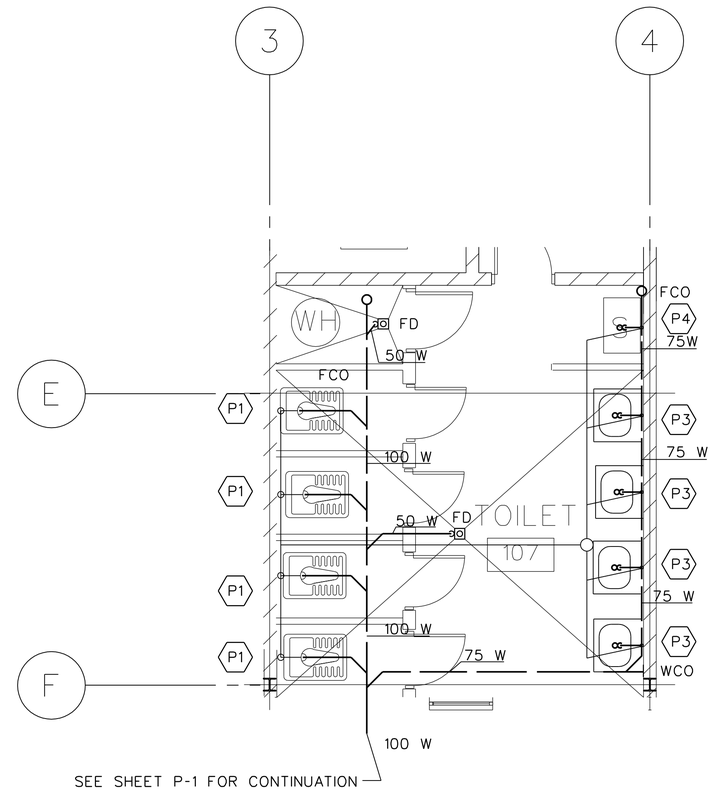

DRAINAGE PIPING PLAN (2 / P-1 P-2)
SCALE - NTS

EWH/X ELECTRIC WATER HEATER SCHEDULE

UNIT NUMBER	LOCATION (ROOM NO.)	STORAGE CAPACITY (LITERS)	MINIMUM RECOVERY RATE (LITERS/HOUR) @ 50 C RISE	NUMBER OF ELEMENTS	ELECTRICAL REQUIREMENTS				REMARKS
					KW INPUT	VOLTS	PH	HZ	
BB-1	107	75	65.4	1	1 @ 4.5	380	3	50	

UNLESS OTHERWISE NOTED, LINEAR DIMENSIONS SHOWN ARE IN MILLIMETERS.

SYMBOL	DESCRIPTION	DATE	APR

DESIGNED BY: JMR
DATE: 06-27-07
DWN BY: JMR
SUBMITTED BY: RAVI GREWAL, CHIEF, PDT BLDG. SYSTEMS
CHK BY: RMS
FILE NO.: AF0707 BB-MP02LS

US Army Corps of Engineers Transatlantic Programs Center

ANA REGIONAL BRIGADE
PAKTIKA, AFGHANISTAN
COMMUNITY CENTER
LARGE SCALE PLUMBING PLANS

SHEET REFERENCE NUMBER:
BB
P-2

6/26/2007
h:\projects\afghanistan\af0707\af0707bb\mec\AF0707BB-MP02LS.dwg

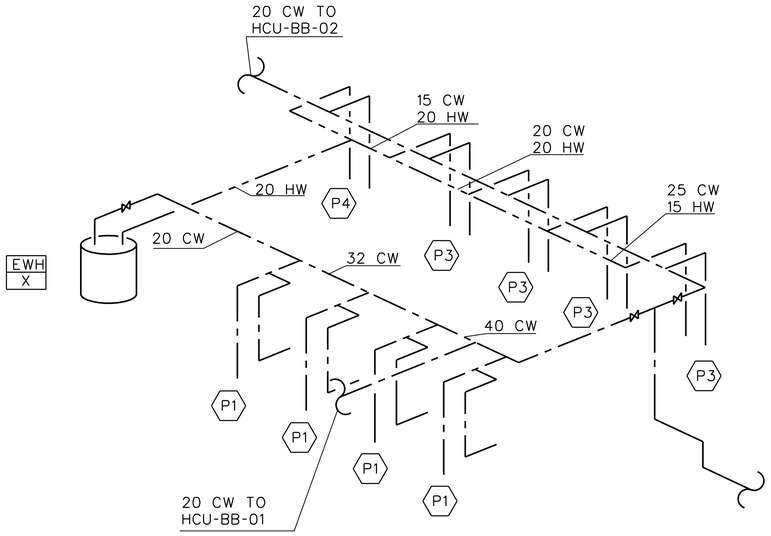

DOMESTIC PIPING RISER (1)
SCALE - NTS

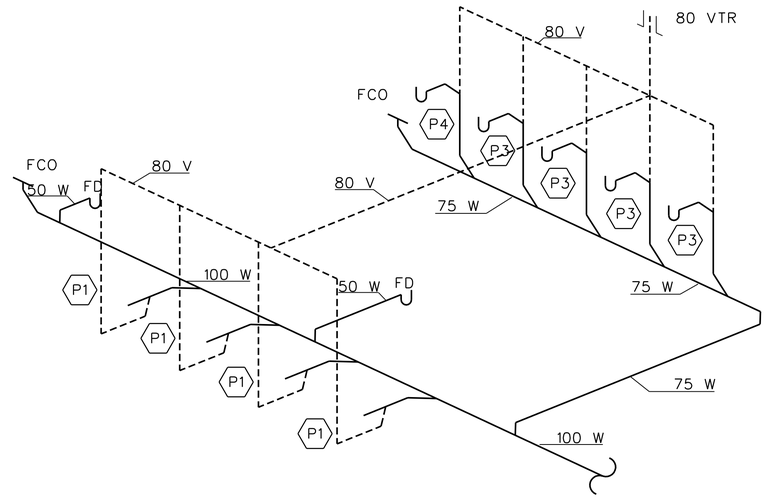

DRAINAGE PIPING RISER (2)
SCALE - NTS

SYMBOL	DESCRIPTION	DATE	APR

DESIGNED BY: JMR
DATE: 06-27-07
DWN BY: JMR
SUBMITTED BY: RAVI GREWAL, CHIEF, PDT BLDG. SYSTEMS
CHK BY: RMS
FILE NO.: AF0707 BB-MP03DI

US Army Corps of Engineers
Transatlantic Programs Center

ANA REGIONAL BRIGADE
PAKTIKA, AFGHANISTAN
COMMUNITY CENTER
PLUMBING RISER DIAGRAMS

SHEET REFERENCE NUMBER:
BB
P-3

6/26/2007
h:\projects\afghanistan\af0707\af0707bb\mec\AF0707BB-MP03DI.dwg

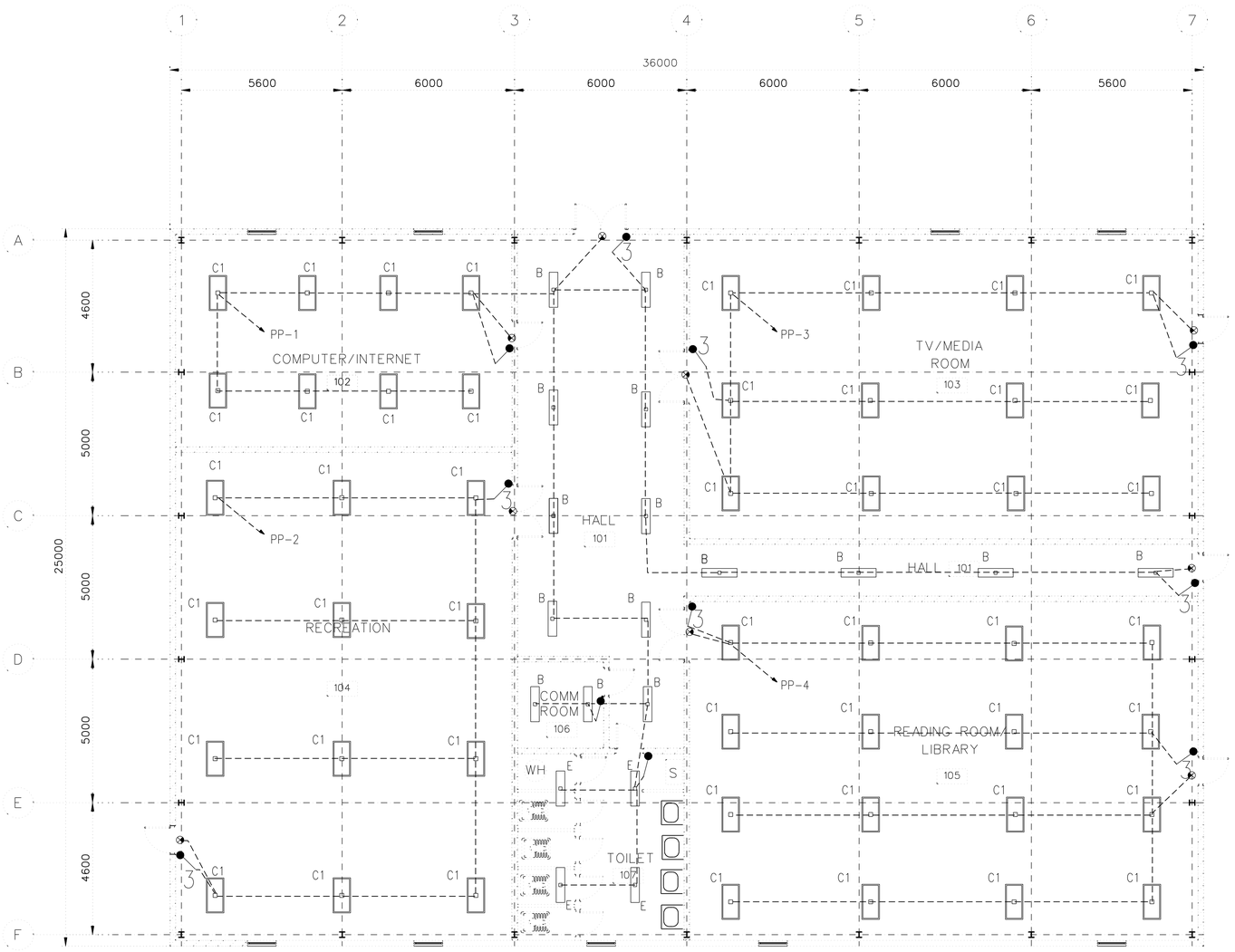

LIGHTING PLAN

NOTES:

1. SEE SHEET CO-E-01 AND CO-E-02 FOR SYMBOLS, ABBREVIATIONS, GENERAL NOTES AND LIGHTING FIXTURE.
2. SEE SHEET CO-E-03 TO CO-E-05 FOR STANDARD DETAILS.
3. SEE DRAWING E-3 FOR PANEL SCHEDULE.
4. EXIT LIGHTS SHALL BE CONNECTED AHEAD OF LIGHT SWITCH.

UNLESS OTHERWISE NOTED, LINEAR DIMENSIONS SHOWN ARE IN MILLIMETERS.

SYMBOL	DESCRIPTION	DATE	APR

DESIGNED BY: MM
DATE: 06-27-07
DWN BY: MM
SUBMITTED BY: RAVI GREWAL, CHIEF, PDT BLDG. SYSTEMS
CHK BY: SE
FILE NO.: AF0707 BB-EL01PN

US Army Corps of Engineers Transatlantic Programs Center

ANA REGIONAL BRIGADE
PAKTIKA, AFGHANISTAN
COMMUNITY CENTER
LIGHTING LAYOUT

SHEET REFERENCE NUMBER:
BB
E-1

6/26/2007
h:\projects\afghanistan\af0707\af0707bb\ele\AF0707BB-EL01PN.dwg

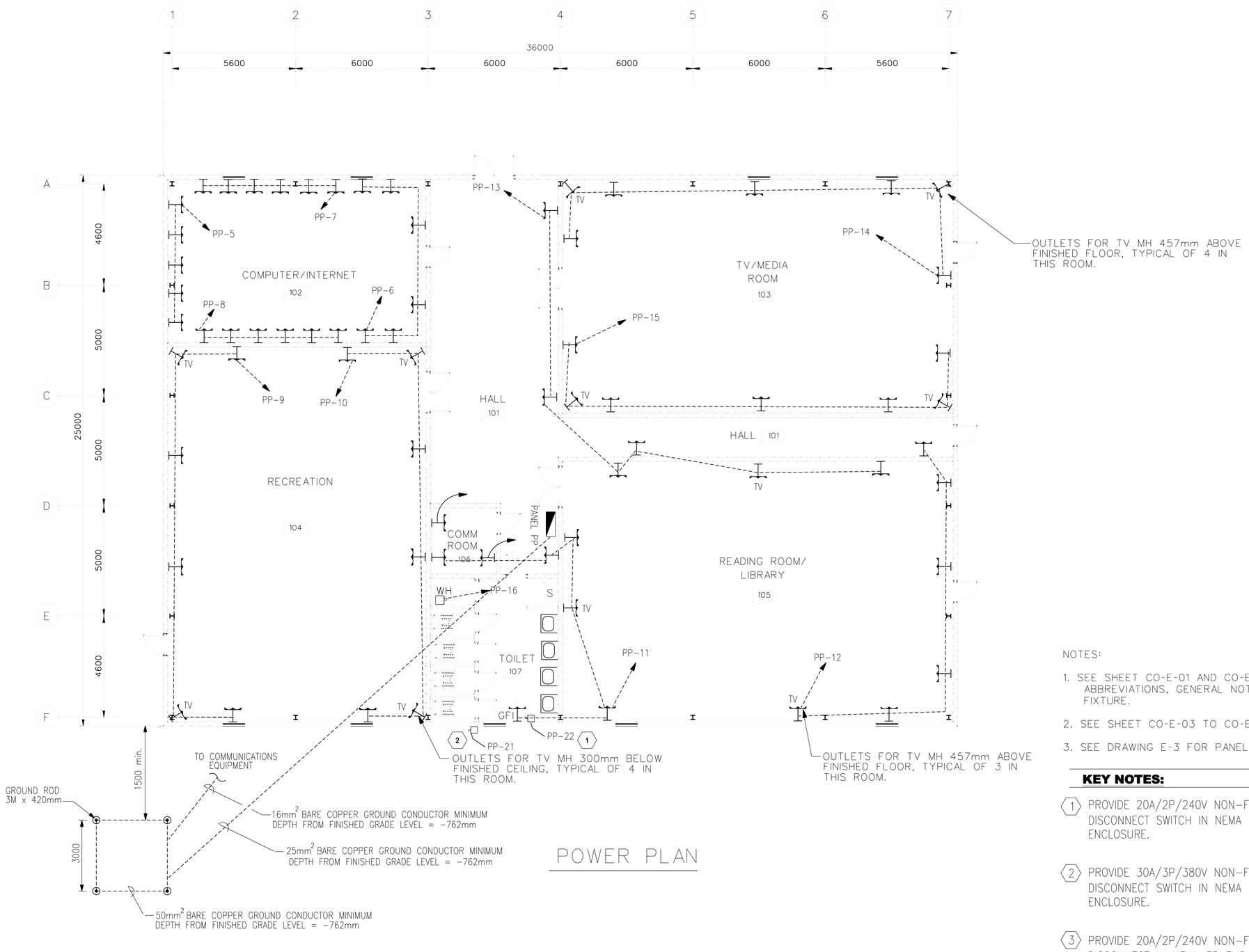

POWER PLAN

NOTES:

1. SEE SHEET CO-E-01 AND CO-E-02 FOR SYMBOLS, ABBREVIATIONS, GENERAL NOTES AND LIGHTING FIXTURE.
2. SEE SHEET CO-E-03 TO CO-E-05 FOR STANDARD DETAILS.
3. SEE DRAWING E-3 FOR PANEL SCHEDULE.

KEY NOTES:

(1) PROVIDE 20A/2P/240V NON-FUSED DISCONNECT SWITCH IN NEMA 1 ENCLOSURE.

(2) PROVIDE 30A/3P/380V NON-FUSED DISCONNECT SWITCH IN NEMA 1 ENCLOSURE.

(3) PROVIDE 20A/2P/240V NON-FUSED DISCONNECT IN NEMA 3R ENCLOSURE

UNLESS OTHERWISE NOTED, LINEAR DIMENSIONS SHOWN ARE IN MILLIMETERS.

SYMBOL	DESCRIPTION	DATE	APR

DESIGNED BY: MM
DATE: 06-27-07
DWN BY: MM
SUBMITTED BY: RAVI GREWAL, CHIEF, PDT BLDG. SYSTEMS
CHK BY: SE
FILE NO.: AF0707 BB-EP02PN

US Army Corps of Engineers
Transatlantic Programs Center

ANA REGIONAL BRIGADE
PAKTIKA, AFGHANISTAN
COMMUNITY CENTER
POWER PLAN

SHEET REFERENCE NUMBER:
BB
E-2

6/26/2007
h:\projects\afghanistan\af0707\af0707bb\ele\AF0707BB-EP02PN.dwg

AIC: 25KA

150A MCB
MLO

VOLTAGE 380/220V, 3PH, 5W, 50HZ

COMMUNITY CENTER
PANEL PP

FEED BOTTOM

MOUNTING FLUSH
LOCATION RM 101

DESCRIPTION	LOAD (VA) A	B	C	AMP	POLE	CKT	A B C	CKT	POLE	AMP	LOAD (VA) A	B	C	DESCRIPTION
LIGHTING 101,102,106,107	3500			20	1	1		2	1	20	2400			LIGHTING 104
LIGHTING 103		2400		20	1	3		4	1	20		3200		LIGHTING 105
RECEPTACLES 102			900	20	1	5		6	1	20			1080	RECEPTALES 102
RECEPTACLES 102	1080			20	1	7		8	1	20	1080			RECEPTALES 102
RECEPTACLES 104		1080		20	1	9		10	1	20		1080		RECEPTALES 104
RECEPTACLES 105			900	20	1	11		12	1	20			1080	RECEPTALES 105
RECEPTACLES 101,105	1080			20	1	13		14	1	20	1260			RECEPTALES 103
RECEPTACLES 103		1260		20	1	15		16				1500		
FANS 102, 104			390	20	1	17		18	3	20			1500	EWH-BB-01
FANS 103, 105	390			20	1	19		20			1500			
SU-1/CU-1 RM 106		1125		20	1	21		22	1	20		233		EF-BB-03
			2850			23		24					2850	
HCU-BB-01				20	3	25		26	3	20	2850			HCU-BB-02
	2850					27		28				2850		
			233			29		30	1	20				SPARE
EF-BB-01	233			20	3	31		32	1	20	180			TTC RECP
		233				33		34	1	20		180		TTC RECP
			233			35		36	1	20				SPARE
EF-BB-02	233			20	3	37		38	1	20				SPARE
		233				39		40	1	20				SPARE
SPARE				20	3	41		42	1	20				SPARE
SUB-TOTALS=	4366	9181	5506								9270	9043	6510	= SUB-TOTALS

	V A	AMPS
TOTAL PHASE A=	18636	84.7
TOTAL PHASE B=	18224	82.84
TOTAL PHASE C=	12016	54.6
TOTAL CONNECTED LOAD	48.9	KVA
DEMANDED FACTOR		80%
DEMANDED LOAD	39.1	KVA
20% FUTURE LOAD	7.8	KVA
TOTAL LOAD	46.9	KVA
TOTAL AMPERE	71.4	AMP

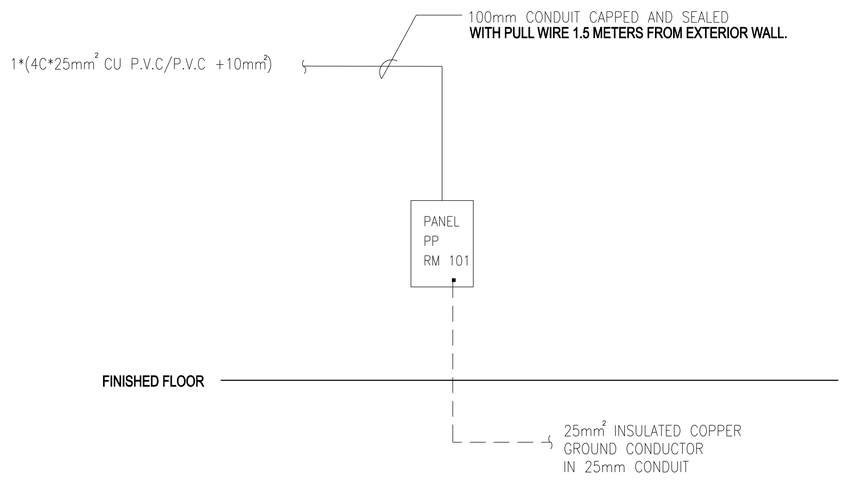

POWER RISER DIAGRAM
NOT TO SCALE

UNLESS OTHERWISE NOTED, LINEAR DIMENSIONS SHOWN ARE IN MILLIMETERS.

SYMBOL	DESCRIPTION	DATE	APR

DESIGNED BY: MM
DATE: 06-27-07
DWN BY: MM
SUBMITTED BY: RAVI GREWAL, CHIEF, PDT BLDG SYSTEMS
CHK BY: SE
FILE NO.: AF0707 BB-EP03SC

US Army Corps of Engineers Transatlantic Programs Center

ANA REGIONAL BRIGADE
PAKTIKA, AFGHANISTAN
COMMUNITY CENTER
PANEL SCHEDULE

SHEET REFERENCE NUMBER:
BB
E-3

6/26/2007
h:\projects\afghanistan\af0707\af0707\bb\ele\AF0707BB-EP03SC.dwg

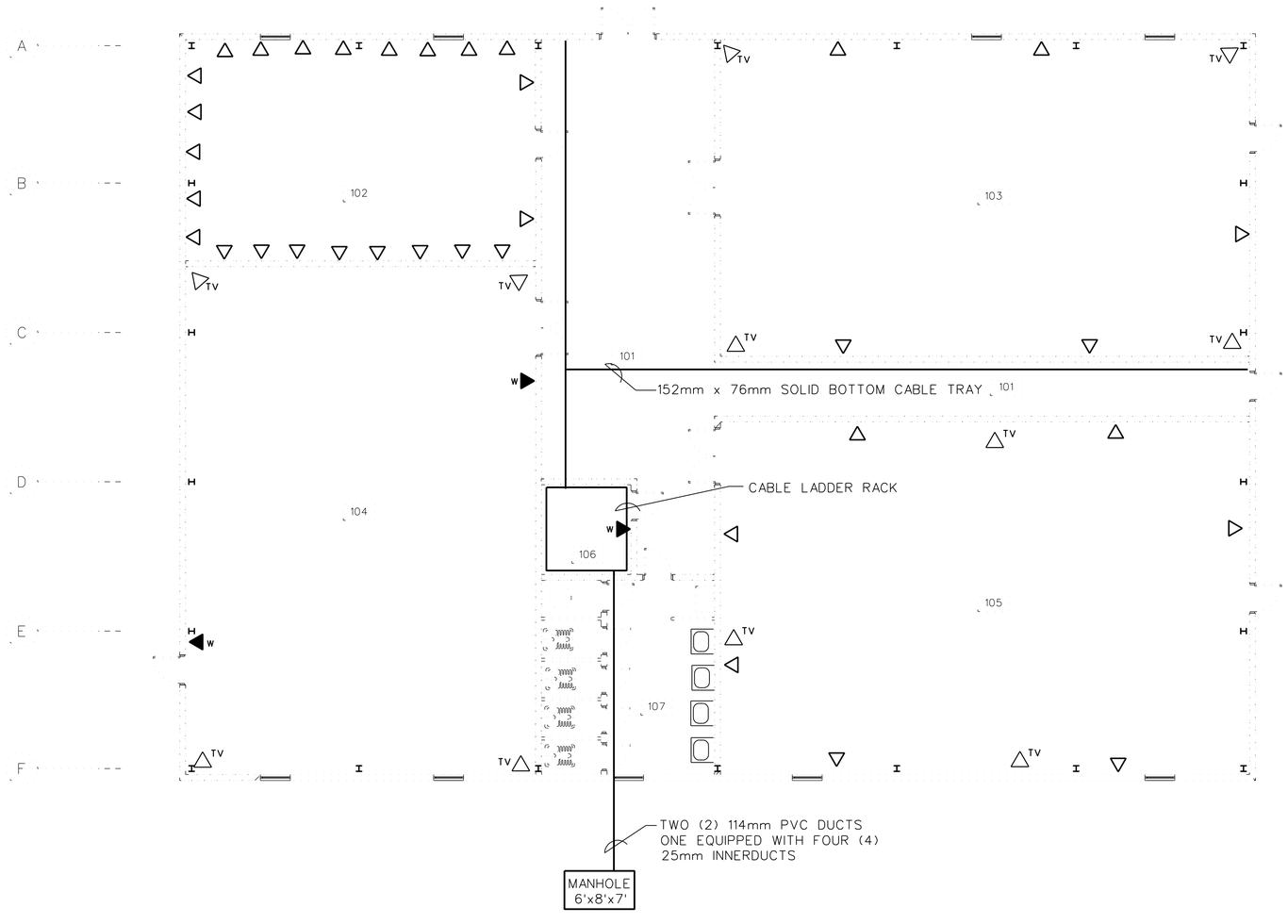

COMMUNICATIONS PLAN

SCALE=1: 100

1:100

UNLESS OTHERWISE NOTED, LINEAR DIMENSIONS SHOWN ARE IN MILLIMETERS.

SYMBOL	DESCRIPTION	DATE	APR

DESIGNED BY: C.JH
DATE: 06-27-07
DWN BY: FHG
SUBMITTED BY: RAVI GREWAL, CHIEF, PDT BLDG. SYSTEMS
CHK BY: C.JH
FILE NO.: AF0707 BB-TC01PN

US Army Corps of Engineers Transatlantic Programs Center

ANA REGIONAL BRIGADE
PAKTIKA, AFGHANISTAN
COMMUNITY CENTER
COMMUNICATIONS PLAN

SHEET REFERENCE NUMBER:
BB
TC-1

6/26/2007
h:\projects\afghanistan\af0707\af0707bb\ele\AF0707BB-TC01PN.dwg

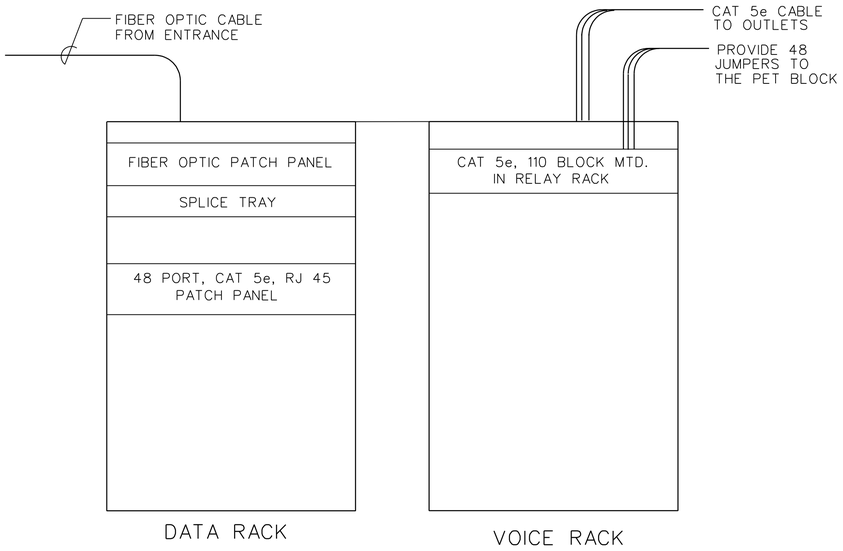

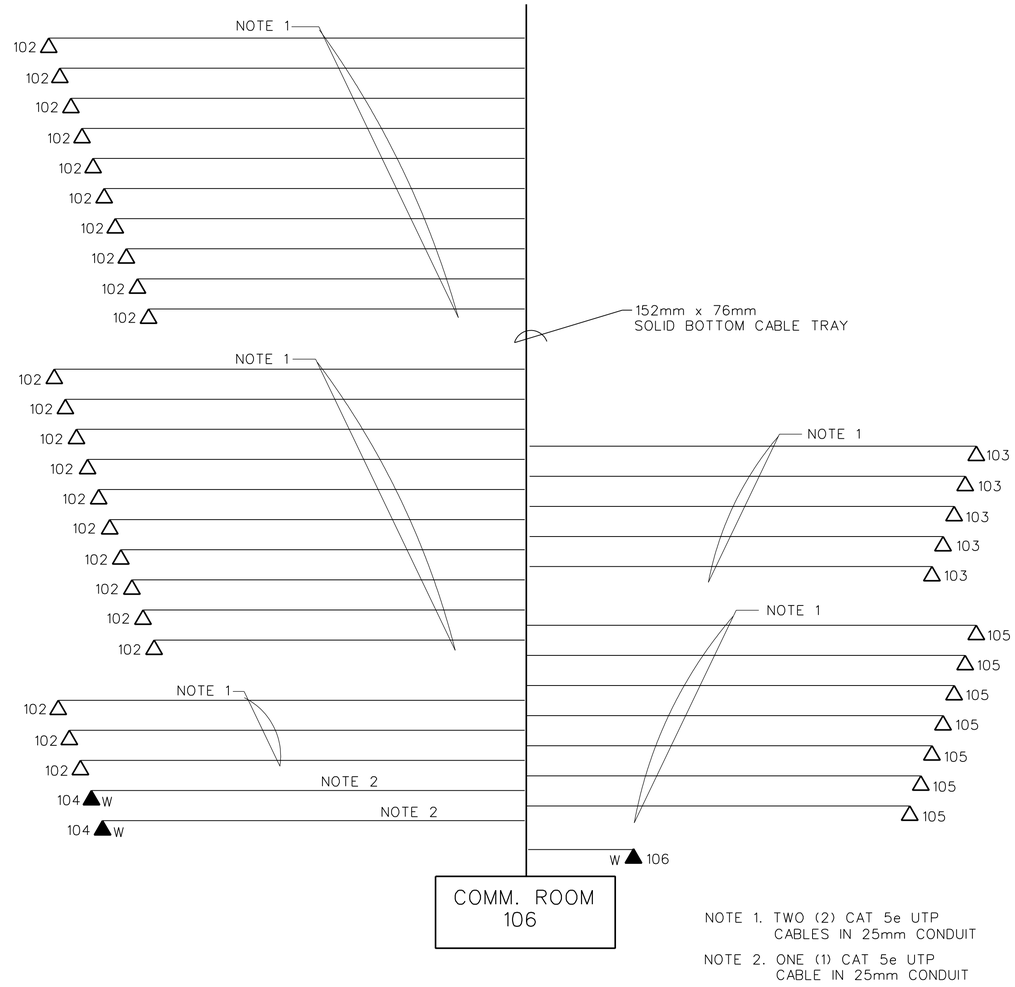

TELEPHONE RISER DIAGRAM

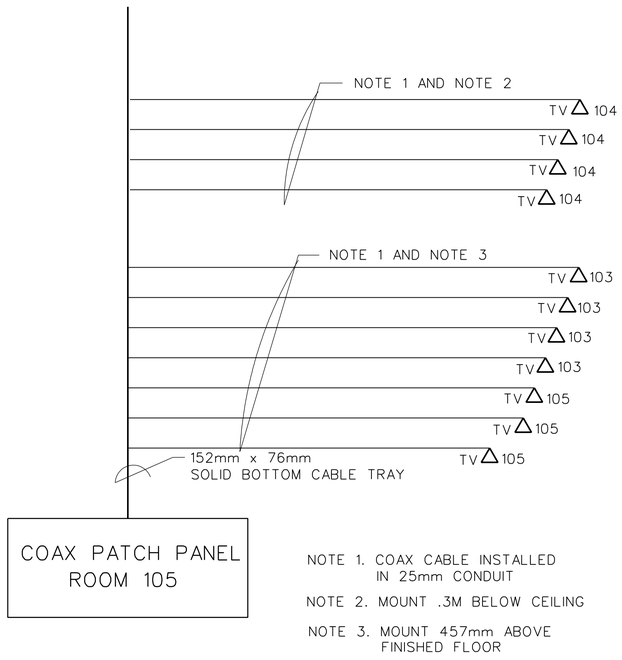

COAX RISER DIAGRAM

SYMBOL	DESCRIPTION	DATE	APR

DESIGNED BY: CH
DATE: 06-27-07
DWN BY: FG
SUBMITTED BY: RAVI GREWAL, CHIEF, PET BLDG. SYSTEMS
CHK BY: CH
FILE NO.: AF0707 BB-TC02DT

US Army Corps of Engineers Transatlantic Programs Center

ANA REGIONAL BRIGADE
PAKTIKA, AFGHANISTAN
COMMUNITY CENTER
COMMUNICATIONS DETAILS

SHEET REFERENCE NUMBER:
BB
TC-2

6/26/2007
h:\projects\afghanistan\af0707\af0707bb\ele\AF0707BB-TC02DT.dwg

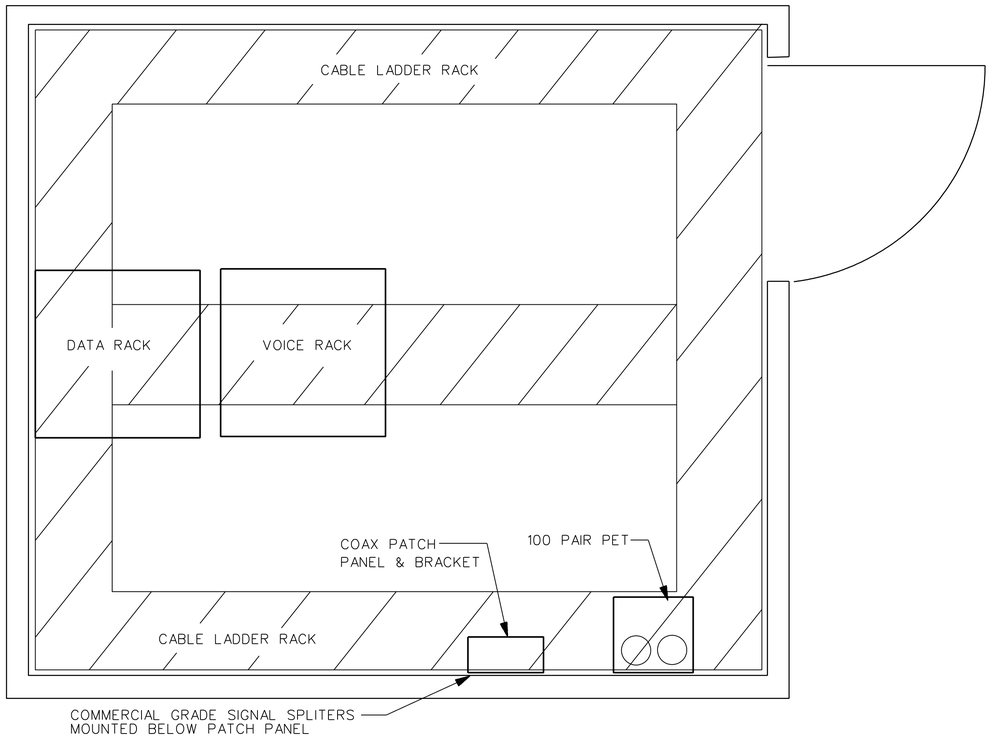

COMMUNICATIONS ROOM 106

TOP VIEW-NOT TO SCALE

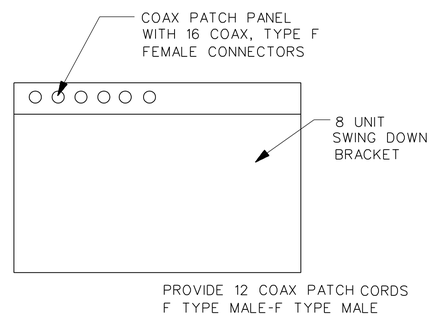

COAX PATCH PANEL DETAIL

NOT TO SCALE

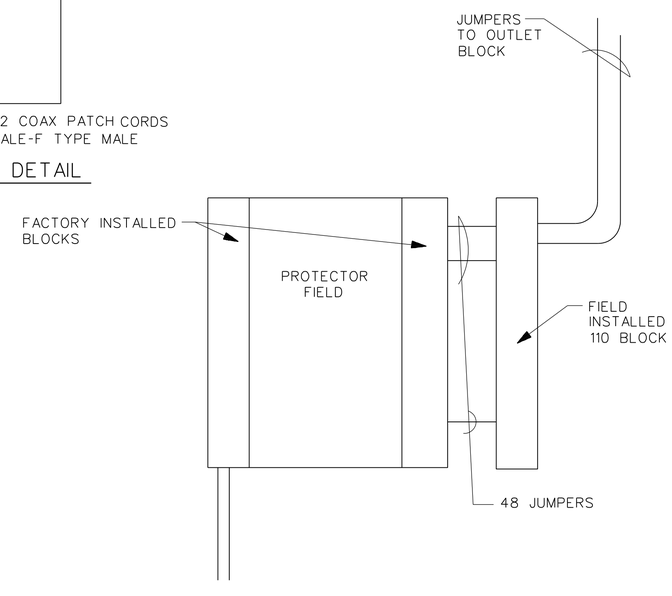

PET DETAIL

NOT TO SCALE

SYMBOL	DESCRIPTION	DATE	APR

DESIGNED BY: CH
DATE: 06-27-07
DWN BY: FG
SUBMITTED BY: RAVI GREWAL, CHIEF, PDT BLDG. SYSTEMS
CHK BY: CH
FILE NO.: AF0707 BB-TC03DT

US Army Corps of Engineers Transatlantic Programs Center

ANA REGIONAL BRIGADE
PAKTIKA, AFGHANISTAN
COMMUNITY CENTER
COMMUNICATIONS DETAILS

SHEET REFERENCE NUMBER:
BB
TC-3

6/26/2007
h:\projects\afghanistan\af0707\af0707bb\ele\AF0707BB-TC03DT.dwg

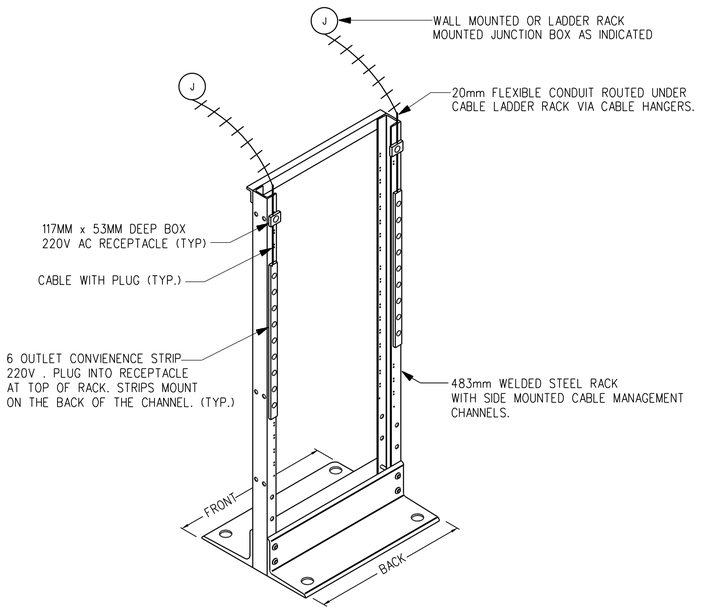

TYPICAL RELAY RACK

NOT TO SCALE

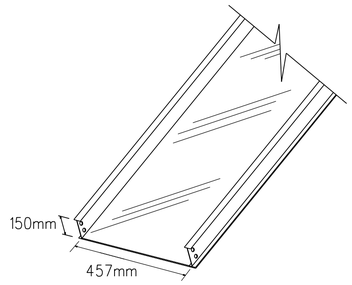

SOLID BOTTOM CABLE TRAY AS INDICATED ON THE FLOOR PLAN

NOT TO SCALE

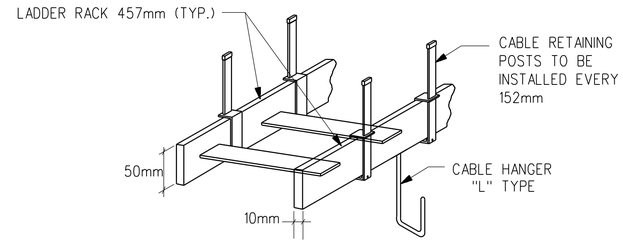

CABLE LADDER TRAY DETAIL COMMUNICATION ROOMS ONLY

NOT TO SCALE

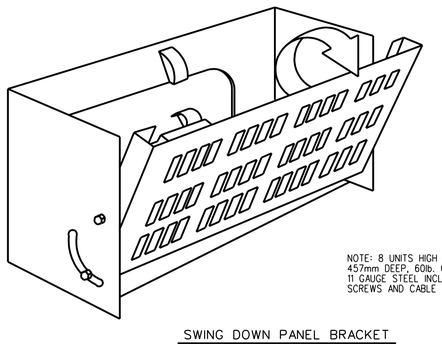

NOTE: 8 UNITS HIGH (356mm) 457mm DEEP, 60lb. CAPACITY 11 GAUGE STEEL INCLUDES RACK SCREWS AND CABLE TIE LOOPS.

SWING DOWN PANEL BRACKET

NOT TO SCALE

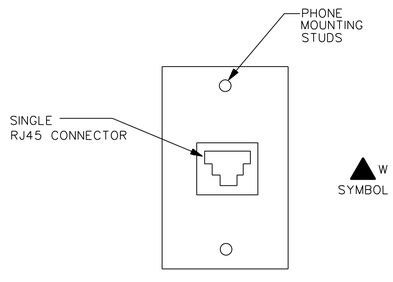

TYP WALL MOUNTED TELEPHONE OUTLET DETAIL

NOT TO SCALE

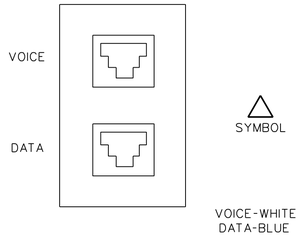

DATA-COPPER

NOT TO SCALE

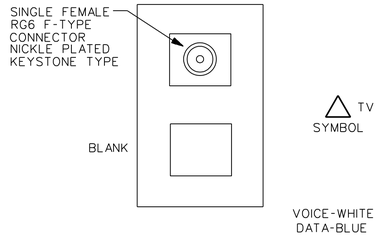

TYP WALL MOUNTED CATV OUTLET DETAIL

NOT TO SCALE

SYMBOL	DESCRIPTION	DATE	APR

DESIGNED BY: CH
DATE: 06-27-07
DWN BY: FG
SUBMITTED BY: RAVI GREWAL, CHIEF, PDT BLDG. SYSTEMS
CHK BY: CH
FILE NO.: AF0707 BB-TC04DT

US Army Corps of Engineers Transatlantic Programs Center

ANA REGIONAL BRIGADE
PAKTIKA, AFGHANISTAN
COMMUNITY CENTER
COMMUNICATIONS DETAILS

SHEET REFERENCE NUMBER:
BB
TC-4

6/26/2007
h:\projects\afghanistan\af0707\af0707bb\ele\AF0707BB-TC04DT.dwg

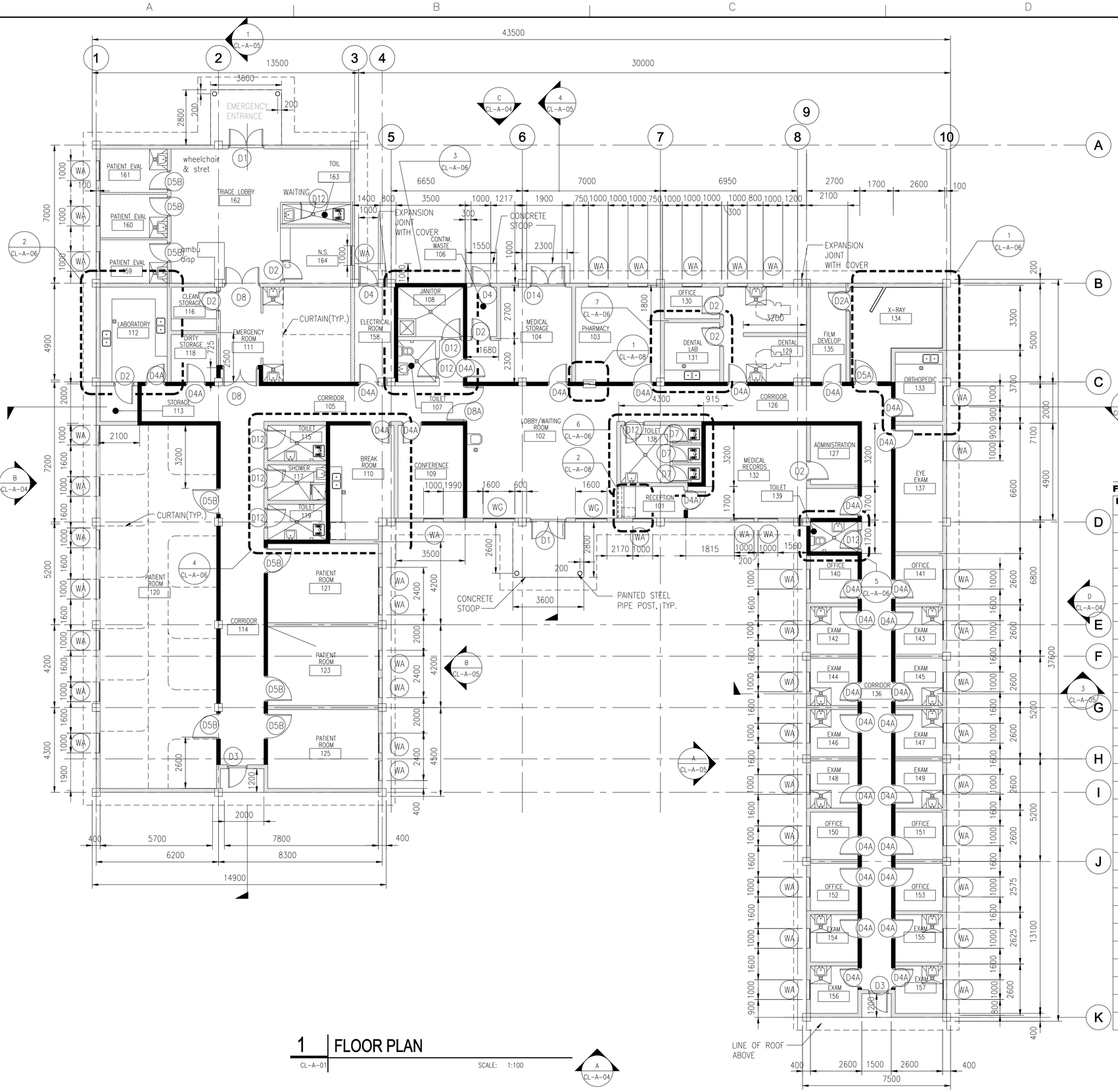

1 FLOOR PLAN

CL-A-01 SCALE: 1:100

NOTES:

1- ALL WALLS ARE CMU UNLESS NOTED OTHERWISE.
2- ALL WALL TERMINATE AT CONCRETE CEILING UNLESS NOTED OTHERWISE.
3- ALL DIMENSIONS ARE TO FACE OF CMU UNLESS NOTED OTHERWISE.
4- ALL VERTICAL DIMENSIONS & LEVELS ARE FROM GROUND FLOOR FINISHED SLAB. THIS ELEVATION IS +0000.
5- SEE DRAWING CO-A-05 & CO-A-06 FOR OPENING SCHEDULES & TYPES.
6- SEE DRAWING CO-A-02, CO-A-03 & CO-A-04 FOR STANDARD DETAILS.
7- SEE CIVIL DRAWINGS FOR BUILDING COORDINATES AND FINISH FLOOR ELEVATION.
8- SEE STRUCTURAL DRAWINGS FOR LOCATION OF BUILDING CONTROL AND SEISMIC JOINTS.
9- TOTAL AREA OF BUILDING IS 898.37 SM.

NOTE:
ORIENT BUILDING ON SITE SUCH TAHT TOILETS ARE ON A NORTH/ SOUTH ACCESS.

FINISHING SCHEDULE LEGEND

FLOOR

F1	NON-SLIP EPOXY (SANITIZED)
F2	300MMX300MM TERRAZZO TILE
F3	CERAMIC TILE

WALL

W1	WHITE PAINTED PLASTER
W2	150MMX150MM GLAZED CERAMIC TILES UP TO 2000MM AFF

CEILING

C1	GYPSUM BOARD – PAINTED
C2	PAINTED EXPOSED STRUCTURE
C3	MOISTURE RESISTANT GYP. BD. PAINTED
C4	WHITE PAINTED PLASTER

WALL SYMBOLS

CMU WALL

CMU LOW HEIGHT WALL +/- 2000 MM WITH CERAMIC TILE FINISH

1 HR RATED TO ROOF CMU FIRE SEPERATION WALL.

CJ CMU CONTROL JOINT

FINISHING SCHEDULE

Room No.	Usage	Floor	Walls	Ceiling
101	ENTRY VESTIBULE	F2	W1	C4
102	LOBBY/ WAITING ROOM	F2	W1	C4
103	PHARMACY	F2	W1	C4
104	MEDICAL STORAGE	F1	W1	C4
105	CORRIDOR	F2	W1	C4
106	CONTAM. WASTE	F3	W1,W2	C4
107	TOILET	F3	W1,W2	C4
108	JANITOR	F3	W1	C4
109	CONFERENCE	F2	W1	C4
110	BREAK ROOM	F2	W1	C4
111	EMERGENCY ROOM	F2	W1	C4
112	LABORATORY	F2	W1	C4
113	STORAGE	F1	W1	C4
114	CORRIDOR	F2	W1	C4
115	TOILET	F3	W1,W2	C4
116	CLEAN STORAGE	F1	W1	C4
117	SHOWER	F3	W1,W2	C4
118	DIRTY STORAGE	F1	W1	C4
119	TOILET	F3	W1,W2	C4
120	PATIENT ROOM	F2	W1	C4
121	PATIENT ROOM	F2	W1	C4
122	NOT USED			
123	PATIENT ROOM	F2	W1	C4
124	NOT USED			
125	PATIENT ROOM	F2	W1	C4
126	CORRIDOR	F2	W1	C4
127	ADMINISTR-ATION	F2	W1	C4
128	NOT USED			
129	DENTAL	F2	W1	C4
130	OFFICE	F2	W1	C4
131	DENTAL LAB	F2	W1	C4
132	MEDICAL RECORDS	F2	W1	C4
133	ORTHOPEDIC	F2	W1	C4
134	X-RAY	F2	W3	C4
135	FILM DEVELOP	F3	W1	C4
136	CORRIDOR	F2	W1	C4
137	EYE EXAM	F2	W1	C4
138	TOILET	F3	W1,W2	C4
139	TOILET	F3	W1,W2	C4
140	OFFICE	F2	W1	C4
141	OFFICE	F2	W1	C4
142	EXAM	F2	W1	C4
143	EXAM	F2	W1	C4
144	EXAM	F2	W1	C4
145	EXAM	F2	W1	C4
146	EXAM	F2	W1	C4
147	EXAM	F2	W1	C4
148	EXAM	F2	W1	C4
149	EXAM	F2	W1	C4
150	OFFICE	F2	W1	C4
151	OFFICE	F2	W1	C4
152	OFFICE	F2	W1	C4
153	OFFICE	F2	W1	C4
154	EXAM	F2	W1	C4
155	EXAM	F2	W1	C4
156	EXAM	F2	W1	C4
157	EXAM	F2	W1	C4
158	ELECTRICAL ROOM	F1	W1	C4
159	PATIENT EVAL	F2	W1	C4
160	PATIENT EVAL	F2	W1	C4
161	PATIENT EVAL	F2	W1	C4
162	TRIAGE LOBBY	F2	W1	C4
163	TOILET	F3	W1,W2	C4
164	N.S.	F1	W1	C4

SYMBOL	DESCRIPTION	DATE	APR

DESIGNED BY: YSK
DWN BY: JSG
CHK BY: PLD
DATE: 06-27-07
SUBMITTED BY: CHIEF, PROJ. PANEL, HQ CHIEF, PROJ. FACILITIES DEV
FILE NO.: AF0707 CL-A-01

US Army Corps of Engineers Transatlantic Programs Center

ANA REGIONAL BRIGADE
PAKTIKA, AFGHANISTAN
MEDICAL CLINIC
FLOOR PLAN

SHEET REFERENCE NUMBER:
DD
CL-A-01

$(getvar, "dwgprefix")$(getvar, "dwgname")$(edtime, 0, MON DD", YYYY - HH:MMam/pm)

NOTE:

THE AMBULANCE SHELTER SHALL BE LOCATED NEAR THE EMERGENCY ENTRANCE TO THE CLINIC. THE CONTRACTOR SHALL FINALIZE THE LOCATION AND DESIGN ALL ASSOCIATED CIVIL AND UTILITY WORK.

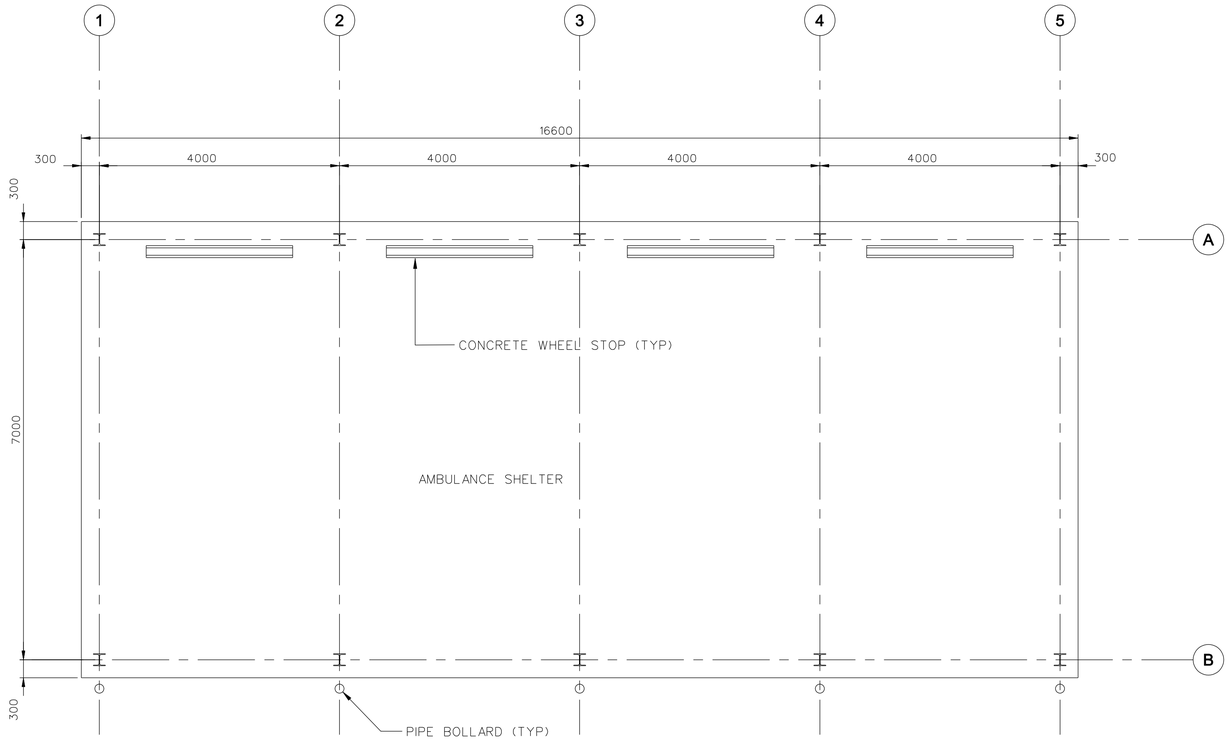

FLOOR PLAN
SCALE 1:100

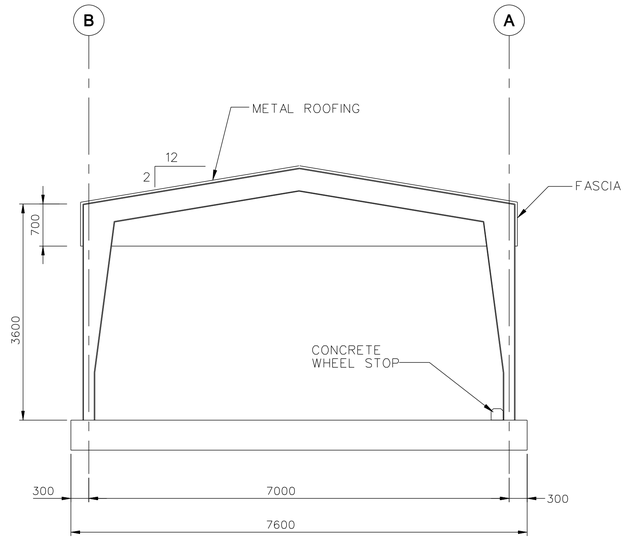

SECTION
SCALE 1:100

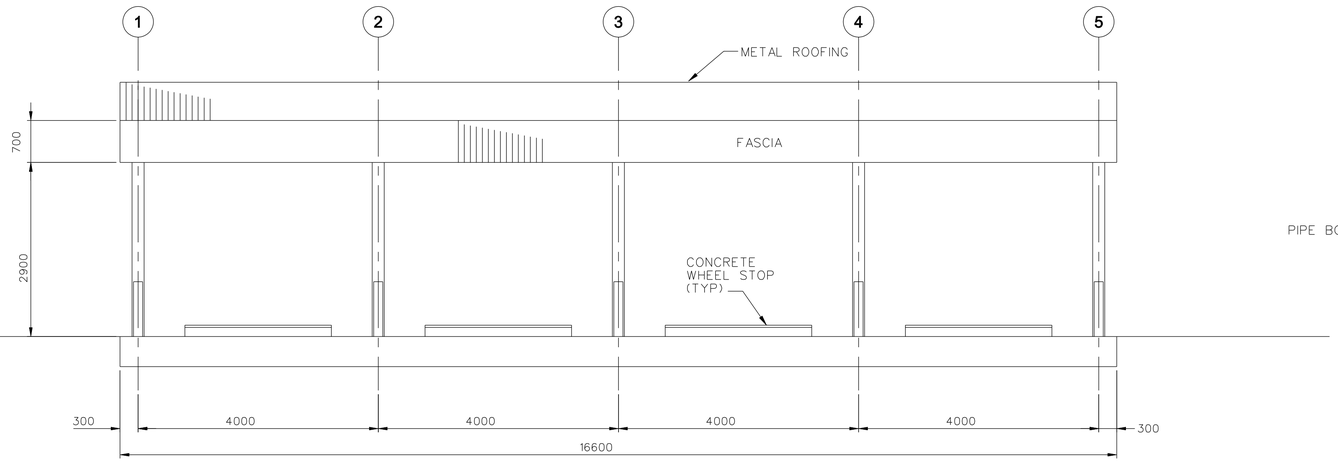

ELEVATION
SCALE 1:100

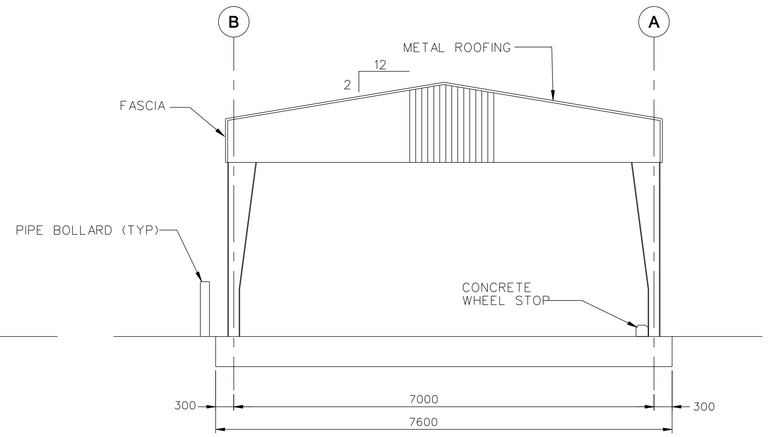

SIDE ELEVATION
SCALE 1:100

1 0 1 2 3 4 5 6 7 8 9
1:100

SYMBOL	DESCRIPTION	DATE	APR

DESIGNED BY: YSK
DWN BY: JSG
CHK BY: PLD
DATE: 06-27-07
SUBMITTED BY: CHIEF, PANELLO PROJECTS DEV
FILE NO.: AF0707CL-A-01A

US Army Corps of Engineers Transatlantic Programs Center

ANA REGIONAL BRIGADE
PAKTIKA, AFGHANISTAN

MEDICAL CLINIC
AMBULANCE SHELTER
FLOOR PLAN/SECTION/ELEVATIONS

SHEET REFERENCE NUMBER:
DD
CL-A-01A

$(getvar, "dwgprefix")$(getvar, "dwgname")$(edtime, 0, MON DD", YYYY - HH:MMam/pm)

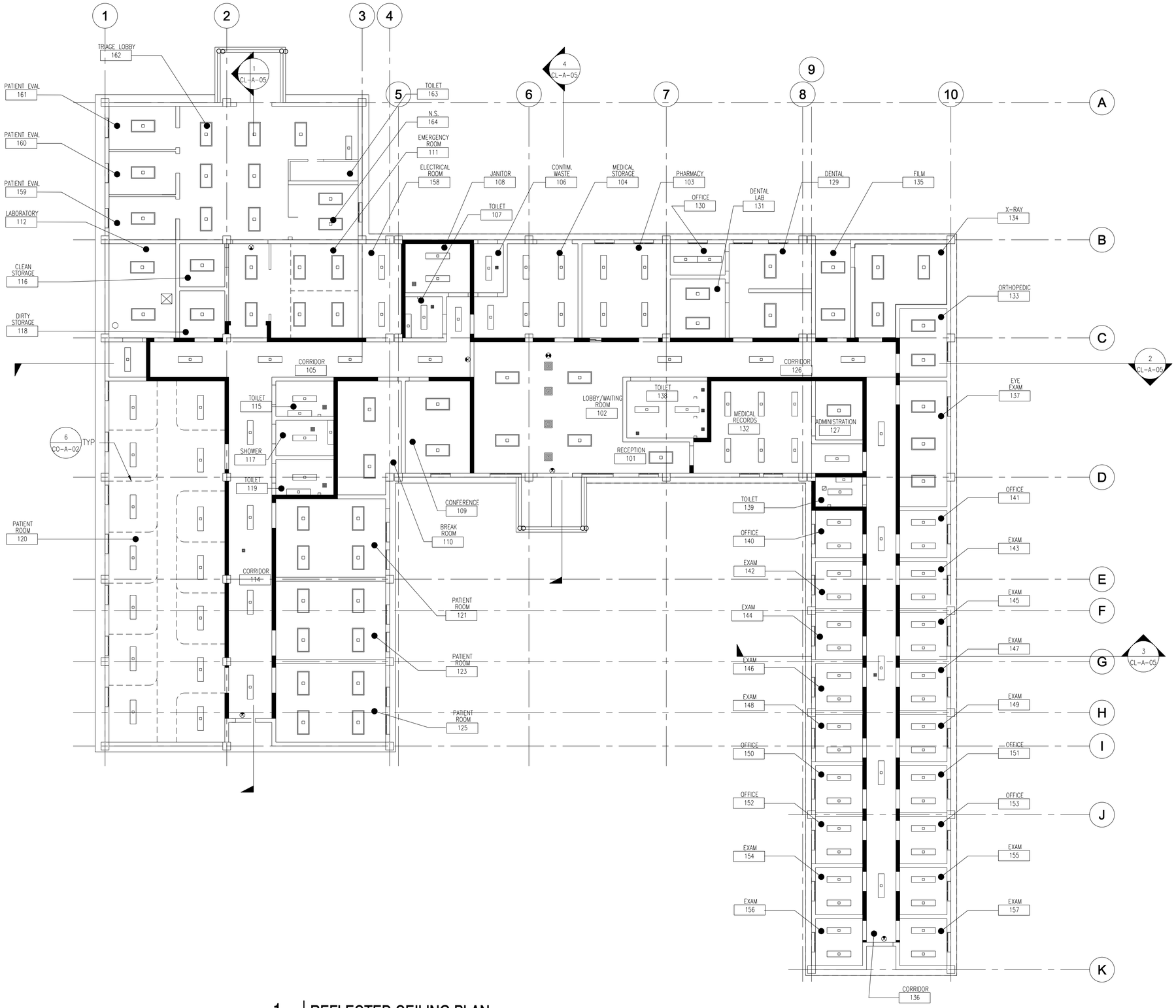

NOTES:

1- SEE SHEET CL-A-01 FOR FINISH SCHEDULE.

2- SEE SHEET CO-E-01 FOR LIGHTING LEGEND.

1 REFLECTED CEILING PLAN

CL-A-02 SCALE: 1:100

1 0 1 2 3 4 5 6 7 8 9
1:100

SYMBOL	DESCRIPTION	DATE	APR

DESIGNED BY: YSK
DWN BY: JSG
CHK BY: PLD
DATE: 06-27-07
SUBMITTED BY: CHIEF PROJ. DIV. PANELIO PACIFICES
FILE NO.: AF0707 CL-A-02

US Army Corps of Engineers Transatlantic Programs Center

ANA REGIONAL BRIGADE
PAKTIKA, AFGHANISTAN
MEDICAL CLINIC
REFLECTED CEILING PLAN

SHEET REFERENCE NUMBER:
DD
CL-A-02

$(getvar, "dwgprefix")$(getvar, "dwgname")$(edtime, O, MON DD", " YYYY - HHMMam/pm)

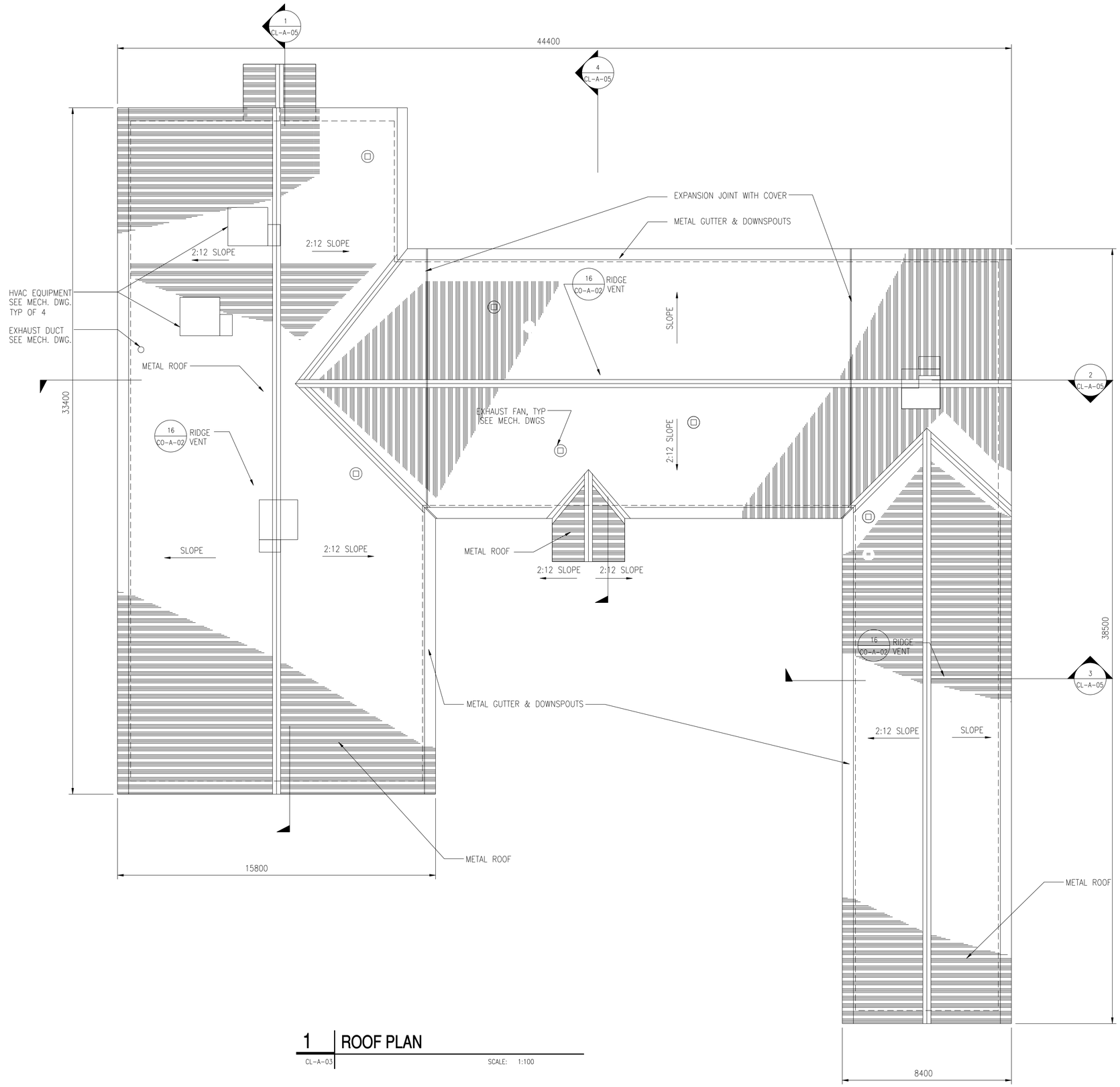

1 ROOF PLAN

CL-A-03 SCALE: 1:100

1 0 1 2 3 4 5 6 7 8 9
1:100

SYMBOL	DESCRIPTION	DATE	APR

DESIGNED BY: YSK
DWN BY: JSG
CHK BY: PLD
DATE: 06-27-07
SUBMITTED BY: CHIEF PROJECTS DEV
FILE NO.: AF0707CL-A-03

US Army Corps of Engineers Transatlantic Programs Center

ANA REGIONAL BRIGADE
PAKTIKA, AFGHANISTAN
MEDICAL CLINIC
ROOF PLAN

SHEET REFERENCE NUMBER:
DD
CL-A-03

$(getvar, "dwgprefix")$(getvar, "dwgname")$(edtime, 0, MON DD", YYYY - H:MMam/pm)

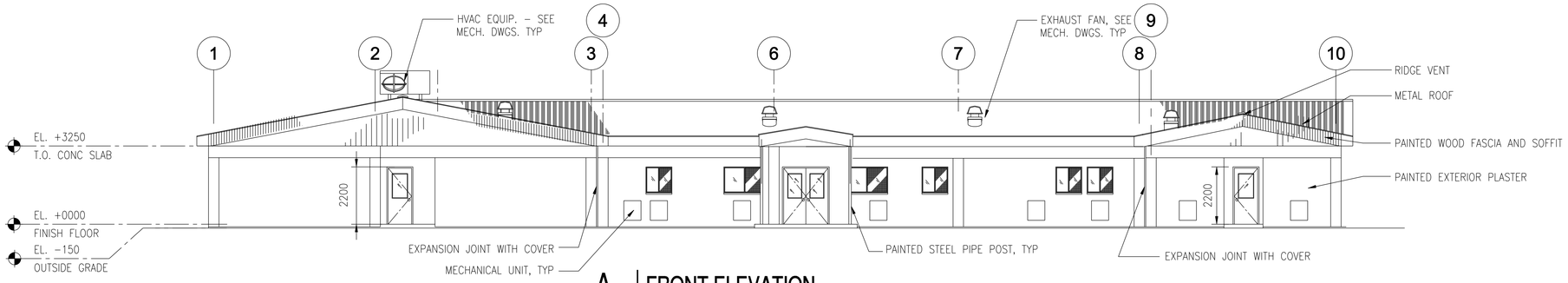

A FRONT ELEVATION

CL-A-04 SCALE: 1:100

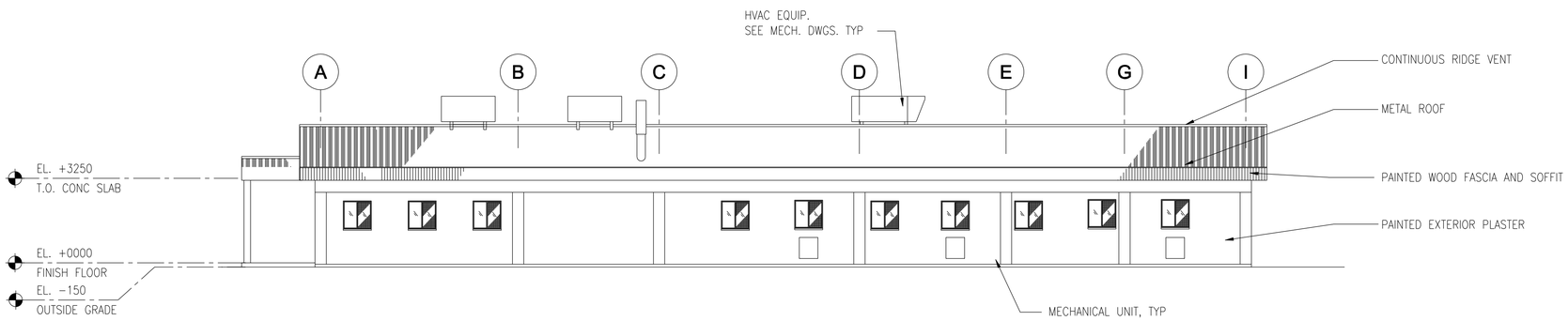

B SIDE ELEVATION

CL-A-04 SCALE: 1:100

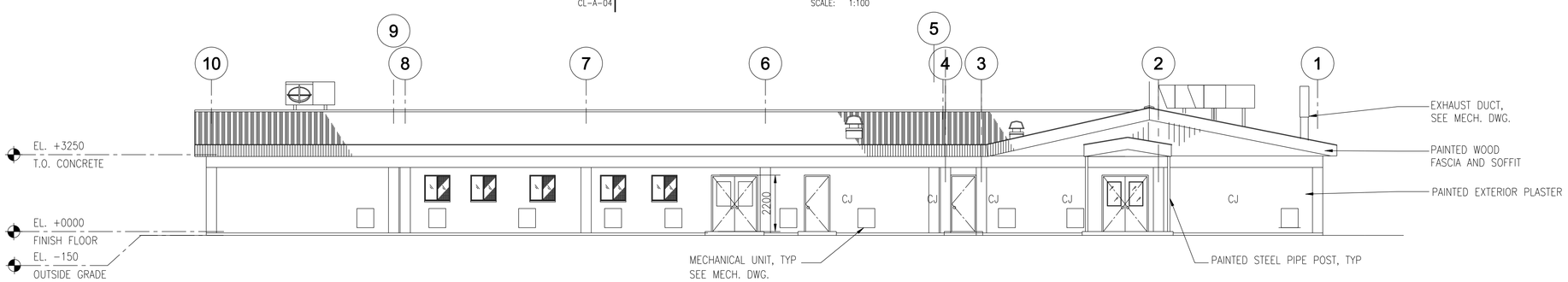

C REAR ELEVATION

CL-A-04 SCALE: 1:100

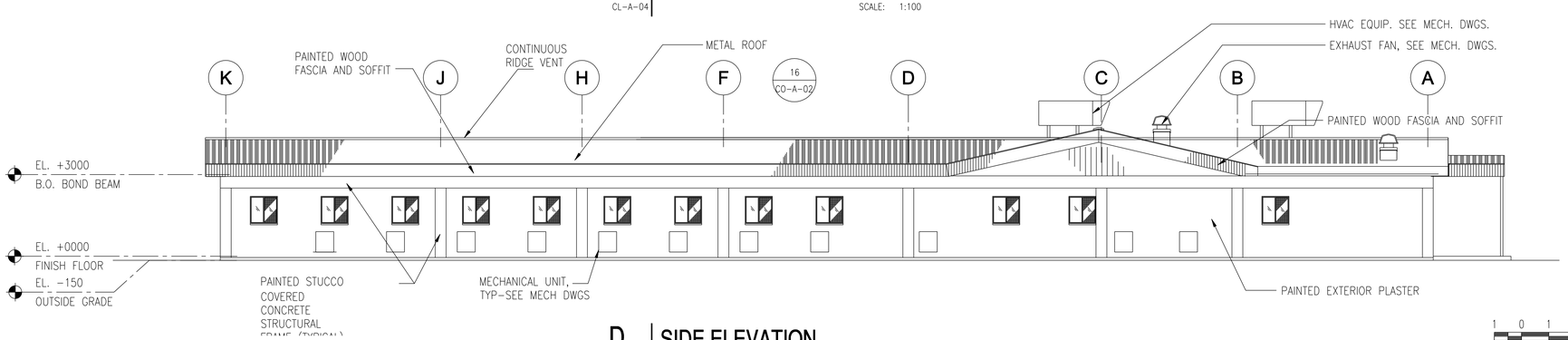

D SIDE ELEVATION

CL-A-04 SCALE: 1:100

1:100

SYMBOL	DESCRIPTION	DATE	APR

DESIGNED BY: YSK
DWN BY: JSG
CHK BY: PLD
DATE: 06-27-07
SUBMITTED BY: DINELLO CHIEF, DIV. PROJECTS DEV
FILE NO.: AF0707CL-A-04

US Army Corps of Engineers Transatlantic Programs Center

ANA REGIONAL BRIGADE
PAKTIKA, AFGHANISTAN

MEDICAL CLINIC

EXTERIOR ELEVATIONS

SHEET REFERENCE NUMBER:
DD
CL-A-04

$(getvar, "dwgprefix")$(getvar, "dwgname")$(edtime, 0, MON DD"", YYYY - HHMMam/pm)

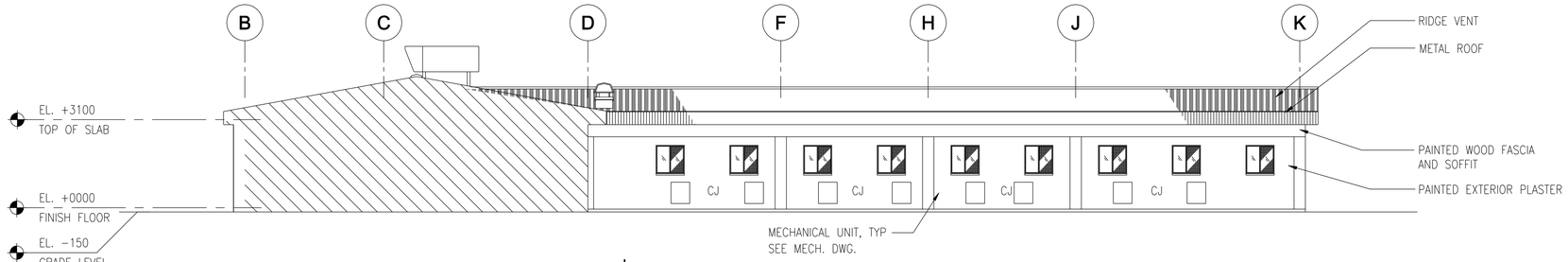

A PARTIAL SIDE ELEVATION

CL-A-05 SCALE: 1:100

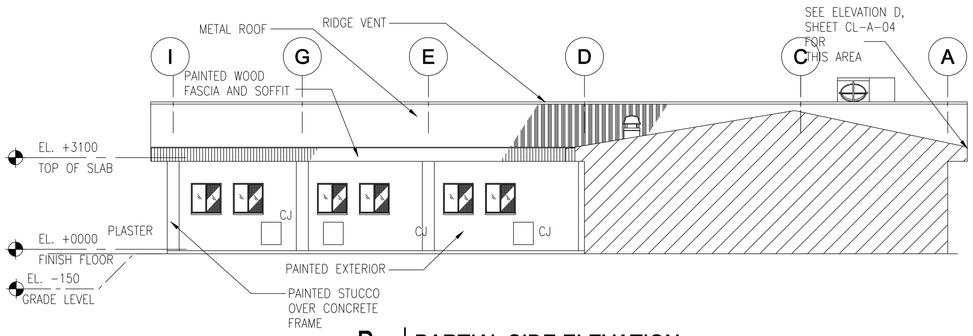

B PARTIAL SIDE ELEVATION

CL-A-05 SCALE: 1:100

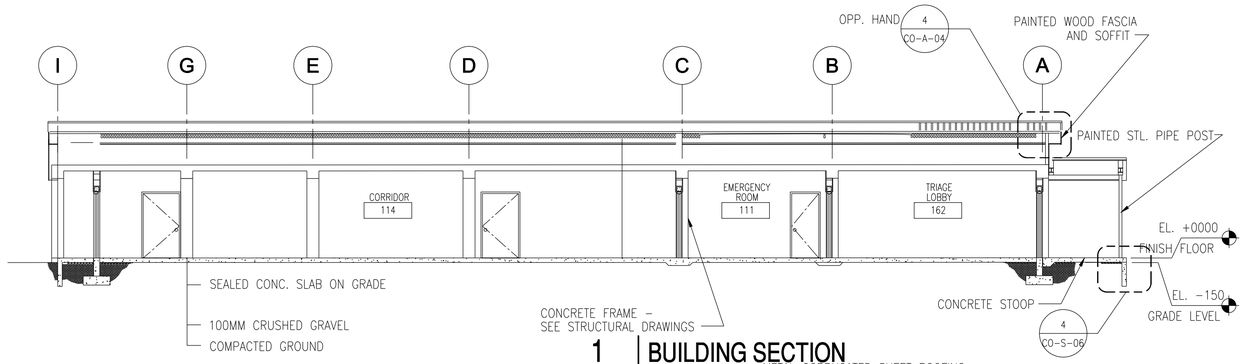

1 BUILDING SECTION

CL-A-05 SCALE: 1:100

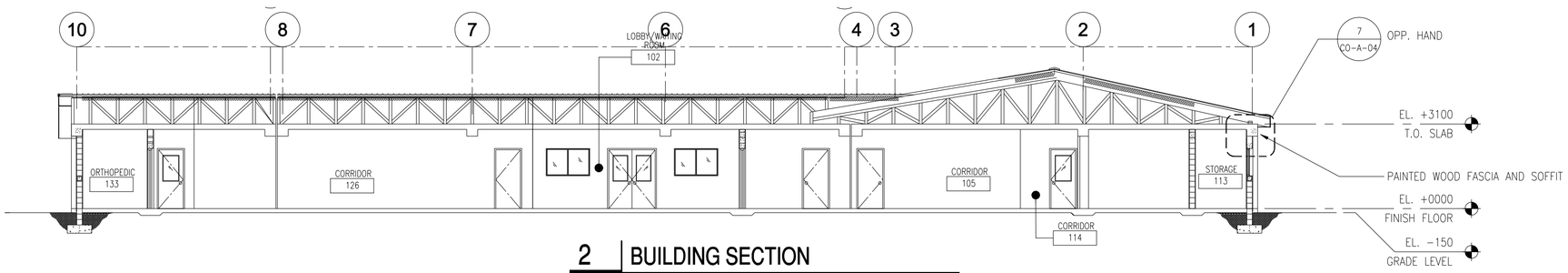

2 BUILDING SECTION

CL-A-05 SCALE: 1:100

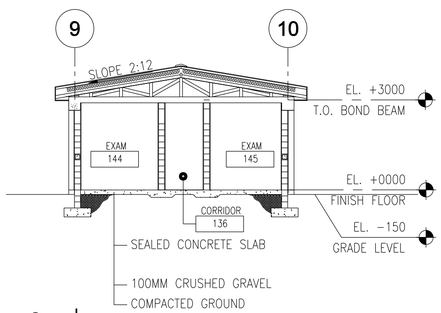

3 BUILDING SECTION

CL-A-05 SCALE: 1:100

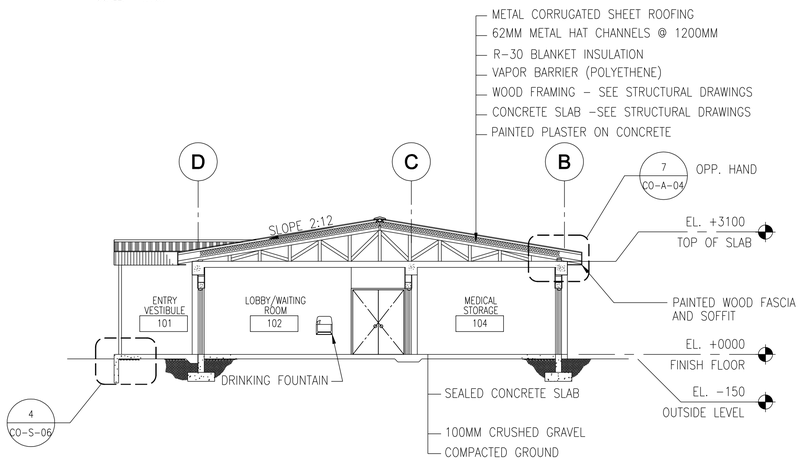

4 BUILDING SECTION

CL-A-05 SCALE: 1:100

1 0 1 2 3 4 5 6 7 8 9
1:100

SYMBOL	DESCRIPTION	DATE	APR

DESIGNED BY: YSK
DATE: 06-27-07
DWN. BY: JSG
SUBMITTED BY: CHIEF, PLD PANELLO
CHK. BY: PLD
FILE NO.: AF0707CL-A-05

US Army Corps of Engineers
Transatlantic Programs Center

ANA REGIONAL BRIGADE
PAKTIKA, AFGHANISTAN

MEDICAL CLINIC
EXTERIOR ELEVATIONS
& BUILDING SECTIONS

SHEET REFERENCE NUMBER:
DD
CL-A-05

$(getvar, "dwgprefix")$(getvar, "dwgname")$(edtime, O, MON DD",", YYYY - HHMMam/pm)

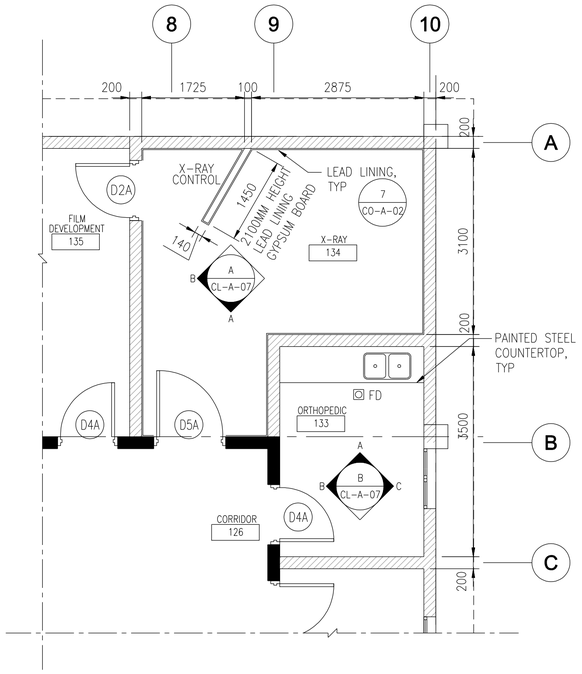

1 ENLARGED PLAN - 133, 134

CL-A-06 SCALE: 1:50

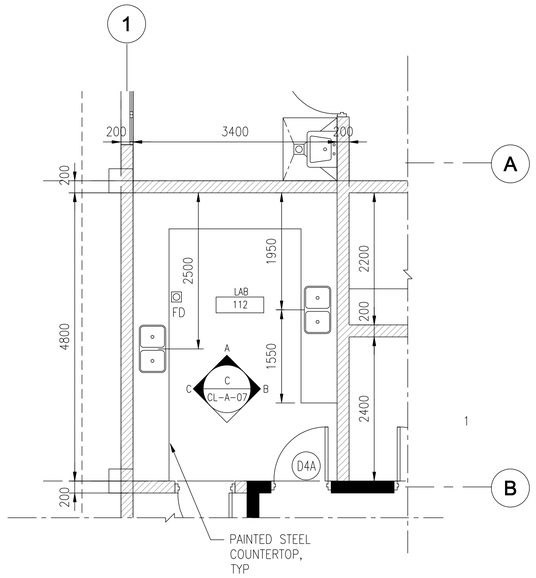

2 ENLARGED PLAN -112

CL-A-06 SCALE: 1:50

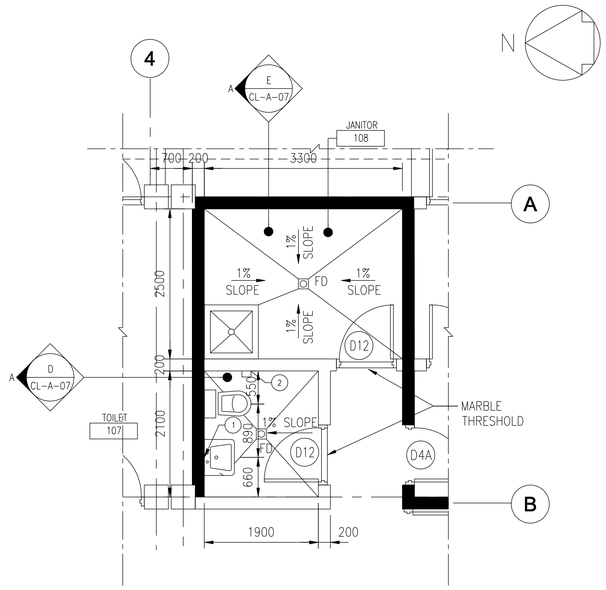

3 ENLARGED PLAN - 107, 108

CL-A-06 SCALE: 1:50

TOILET ACCESSORY SCHEDULE

NO.	DESCRIPTION
1	MIRROR 600X900X6MM PL.GLASS
2	SS TOILET PAPER HOLDER
3	SHOWER ROD & CURTAIN

NOTE:

- SEE SHEET CL-A-01 FOR FINISH SCHEDULE

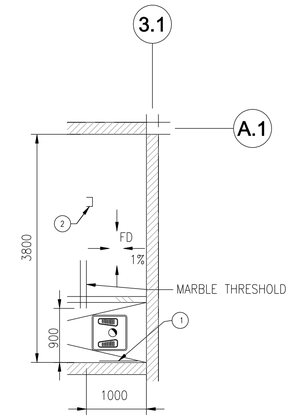

8 ENLARGED PLAN - 163

CL-A-06 SCALE: 1:50

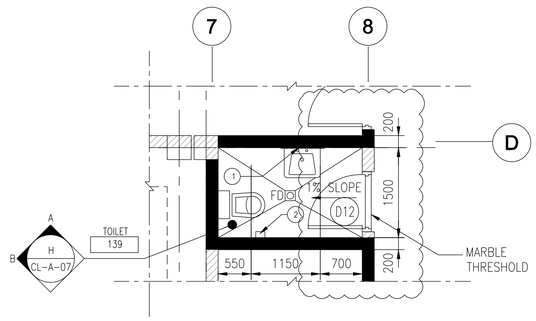

5 ENLARGED PLAN - 139

CL-A-06 SCALE: 1:50

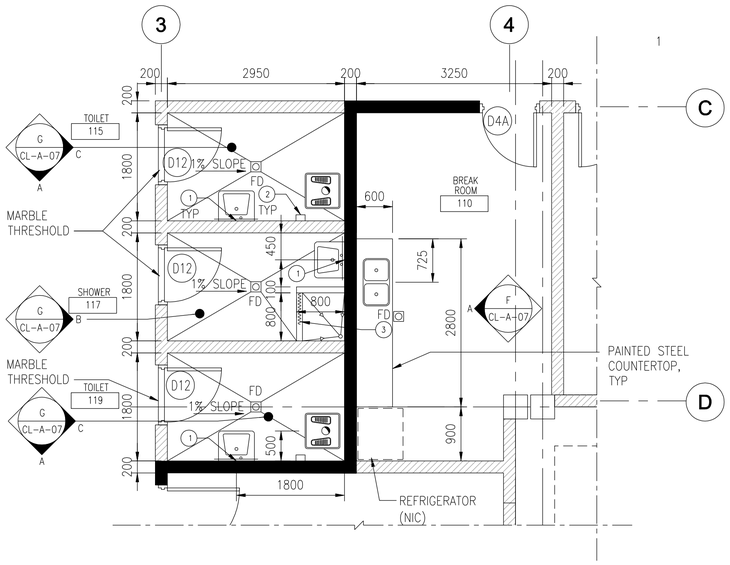

4 ENLARGED PLAN - 110, 115, 117, 119

CL-A-06 SCALE: 1:50

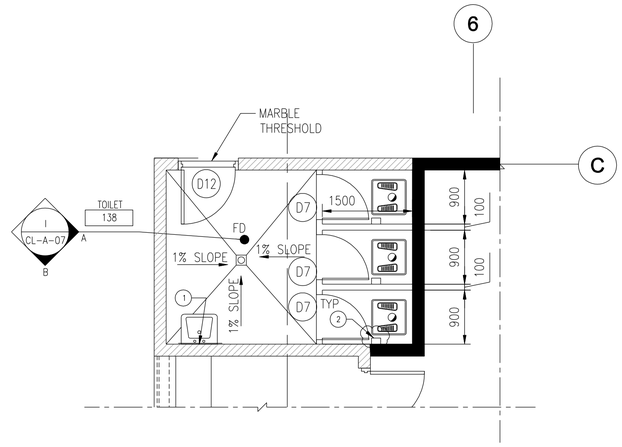

6 ENLARGED PLAN - 138

CL-A-06 SCALE: 1:50

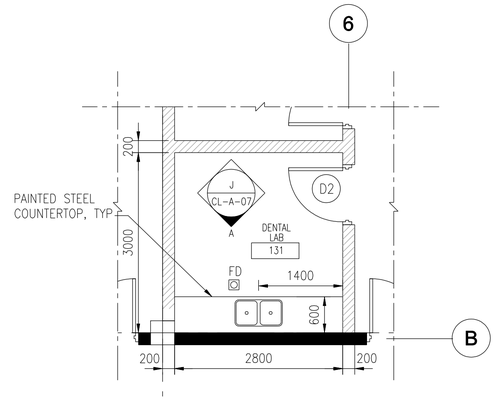

7 ENLARGED PLAN - 131

CL-A-06 SCALE: 1:50

1:50

SYMBOL	DESCRIPTION	DATE	APR

DESIGNED BY: YSK
DATE: 06-27-07
DWN BY: JSG
SUBMITTED BY: PANELLO PHILIP PLT PACETTES DEV
CHK BY: PLD
FILE NO.: AF0707CL-A-06

US Army Corps of Engineers Transatlantic Programs Center

ANA REGIONAL BRIGADE
PAKTIKA, AFGHANISTAN

MEDICAL CLINIC

ENLARGED PLANS

SHEET REFERENCE NUMBER:
DD
CL-A-06

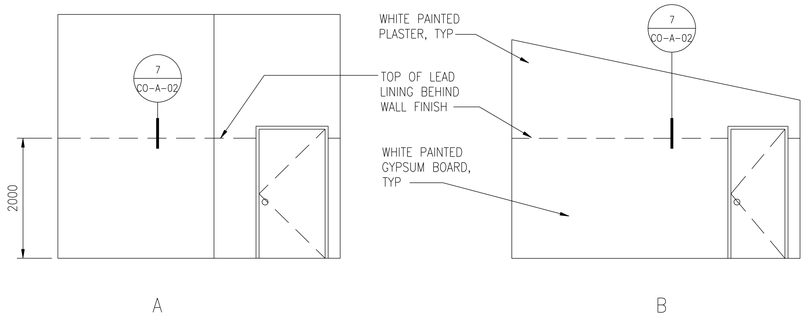

A INTERIOR ELEVATION - 134

CL-A-07 SCALE: 1:50

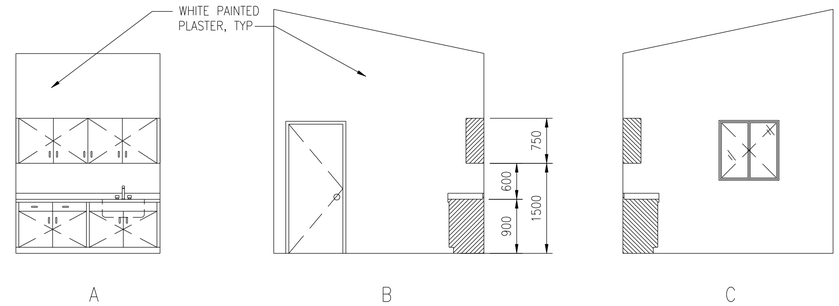

B INTERIOR ELEVATION - 133

CL-A-07 SCALE: 1:50

NOTES:

1- SEE SPECIFICATION SECTION 06411 FOR ARCHITECTURAL CASEWORK.

2- SEE SHEET CL-A-01 FOR FINISH SCHEDULE.

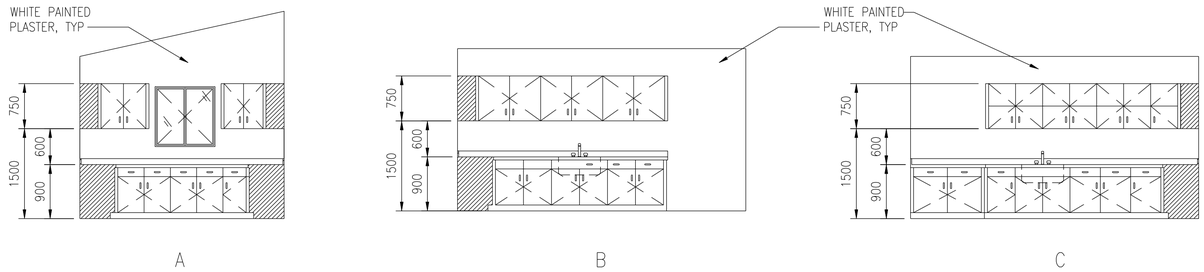

C INTERIOR ELEVATION - 112

CL-A-07 SCALE: 1:50

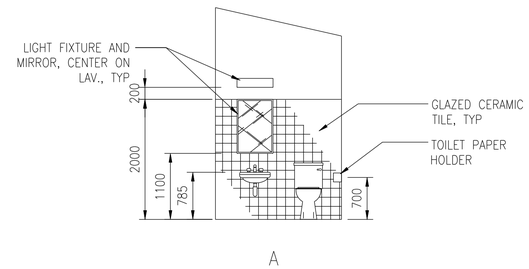

D INTERIOR ELEVATION - 107

CL-A-07 SCALE: 1:50

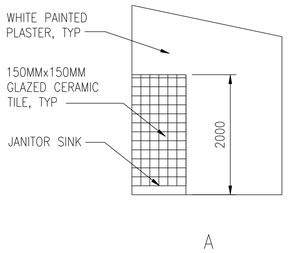

E INTERIOR ELEVATION - 108

CL-A-07 SCALE: 1:50

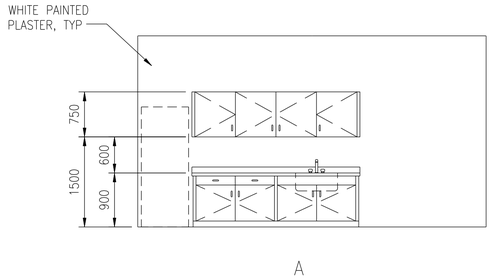

F INTERIOR ELEVATION - 110

CL-A-07 SCALE: 1:50

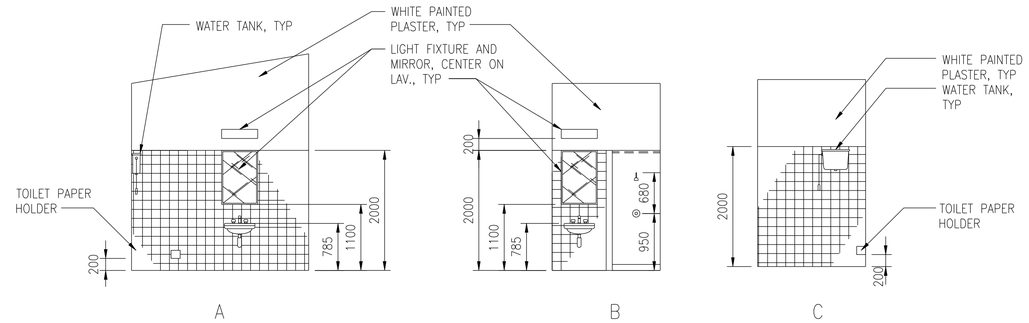

G INTERIOR ELEVATION - 115, 117, 119

CL-A-07 SCALE: 1:50

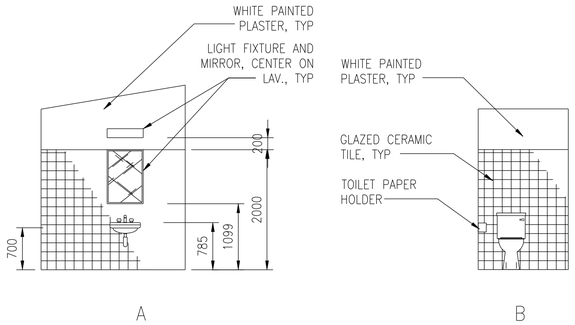

H INTERIOR ELEVATION - 139

CL-A-07 SCALE: 1:50

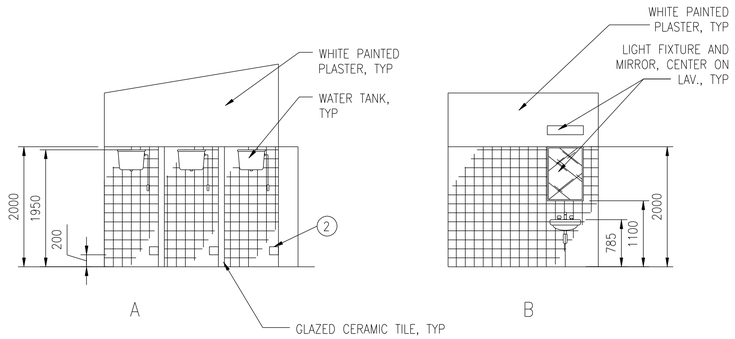

I INTERIOR ELEVATION - 138

CL-A-07 SCALE: 1:50

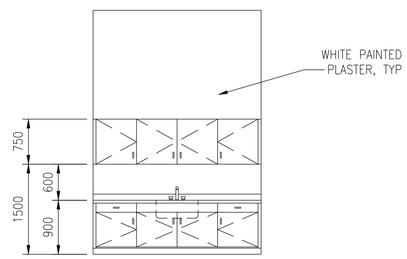

J INTERIOR ELEVATION - 131

CL-A-07 SCALE: 1:50

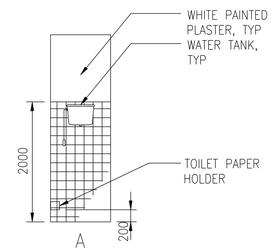

K INTERIOR ELEVATION - 163

CL-A-07 SCALE: 1:50

1 0 1 2 3 4
1:50

SYMBOL	DESCRIPTION	DATE	APR

DESIGNED BY: YSK
DATE: 06-27-07
DWN. BY: JSG
SUBMITTED BY: PHILIP PANELLO CHIEF, PDT PACIFIC DEV
CHK BY: PLD
FILE NO.: AF0707CL-A-07

US Army Corps of Engineers Transatlantic Programs Center

ANA REGIONAL BRIGADE
PAKTIKA, AFGHANISTAN
MEDICAL CLINIC
INTERIOR ELEVATIONS

SHEET REFERENCE NUMBER:
DD
CL-A-07

$(getvar, "dwgprefix")$(getvar, "dwgname")$(edtime, 0, MON DD", " YYYY - HHMMam/pm)

NOTES:

1- SEE SPECIFICATION SECTION 06411 FOR ARCHITECTURAL CASEWORK.

2- SEE SHEET CL-A-01 FOR FINISH SCHEDULE.

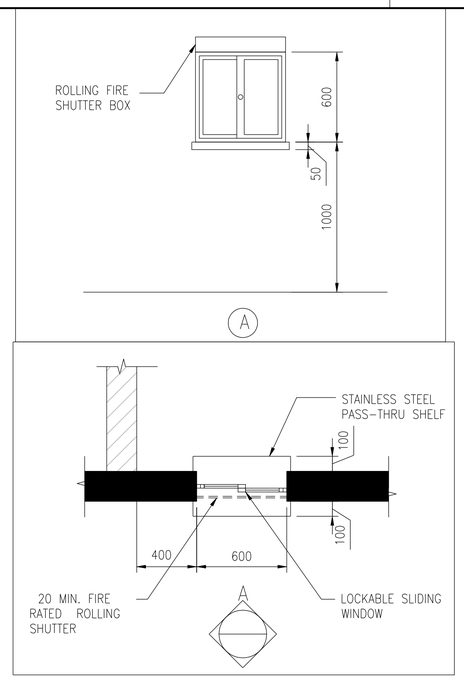

1 PHARMACY WINDOW

CL-A-08 SCALE: 1:20

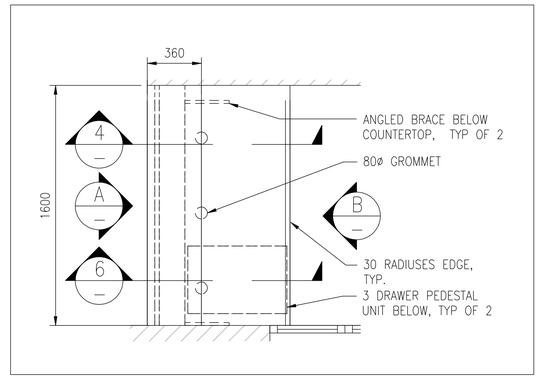

2 RECEPTION DESK

CL-A-08 SCALE: 1:20

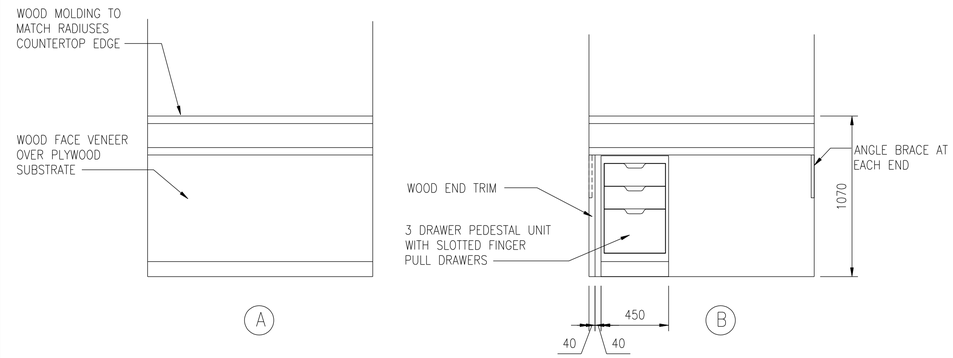

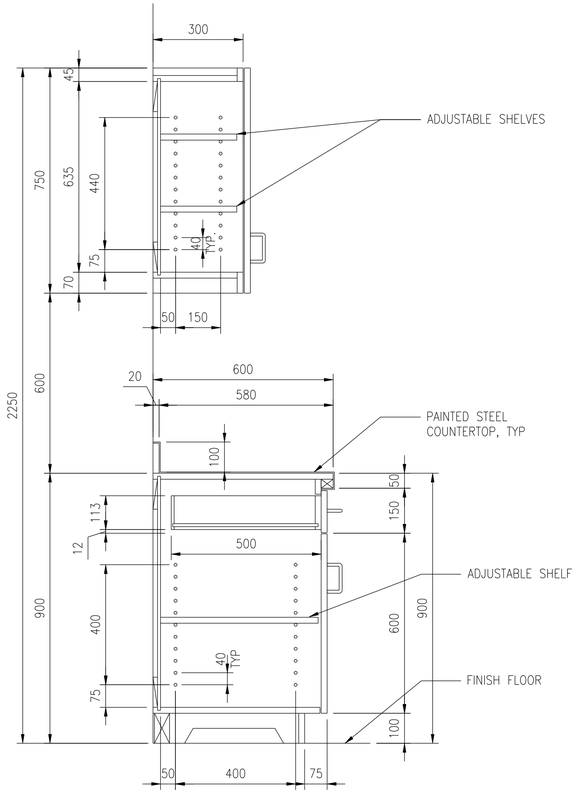

3 DETAIL - TOP & BOTTOM CASEWORK

CL-A-08 SCALE: 1:10

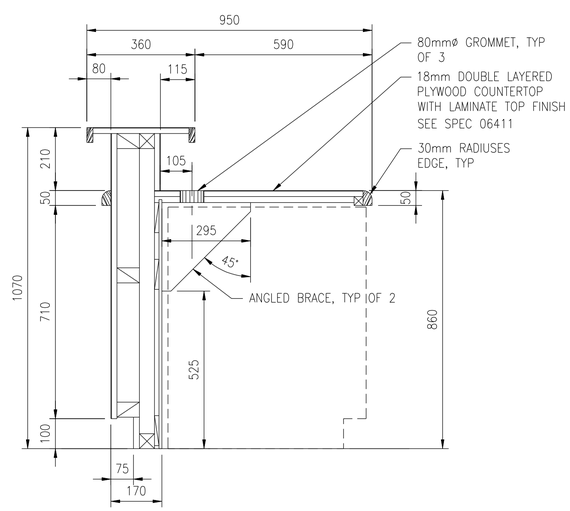

4 SECTION AT RECEPTION DESK

CL-A-08 SCALE: 1:10

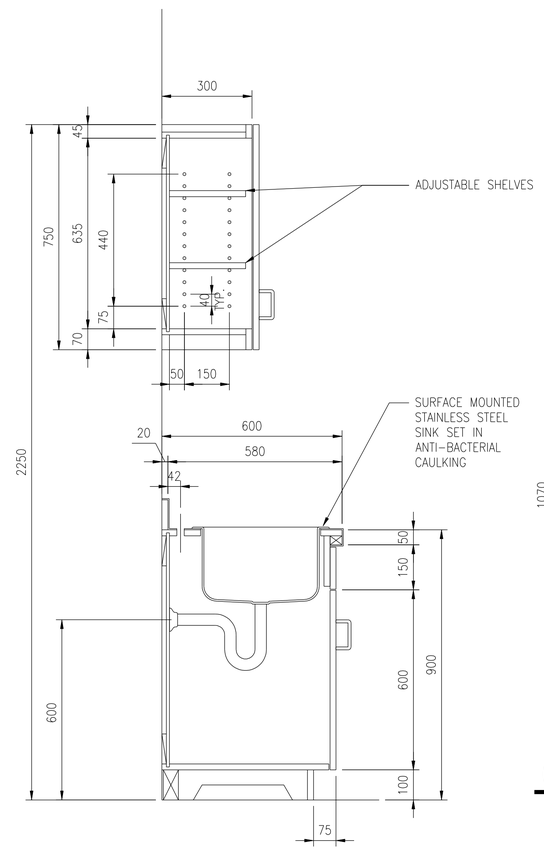

5 DETAIL - AT SINK

CL-A-08 SCALE: 1:10

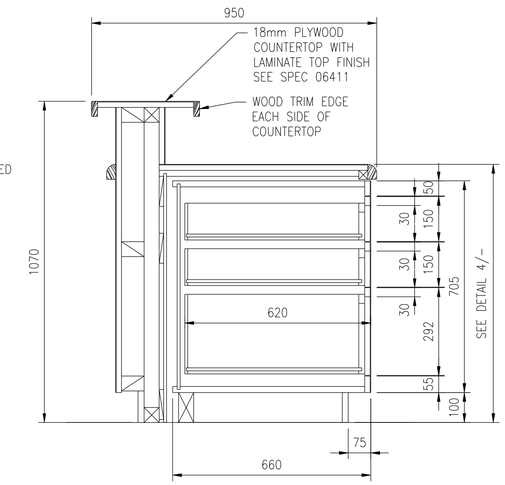

6 SECTION AT RECEPTION DESK - PEDESTAL

CL-A-08 SCALE: 1:10

1 .50 0 1
1:20

0 .50 1.00
1:10

SYMBOL	DESCRIPTION	DATE	APR

DESIGNED BY: YSK
DWN BY: JSG
CHK BY: PLD
DATE: 06-27-07
SUBMITTED BY: PHILIP J. PANELLO CHIEF, PDT PACIFIC DEV
FILE NO.: AF0707CL-A-08

US Army Corps of Engineers Transatlantic Programs Center

ANA REGIONAL BRIGADE
PAKTIKA, AFGHANISTAN

MEDICAL CLINIC

INTERIOR CASEWORK DETAILS

SHEET REFERENCE NUMBER:
DD
CL-A-08

$(getvar, "dwgprefix")$(getvar, "dwgname")$(edtime, O, MON DD"," YYYY - HMMam/pm)

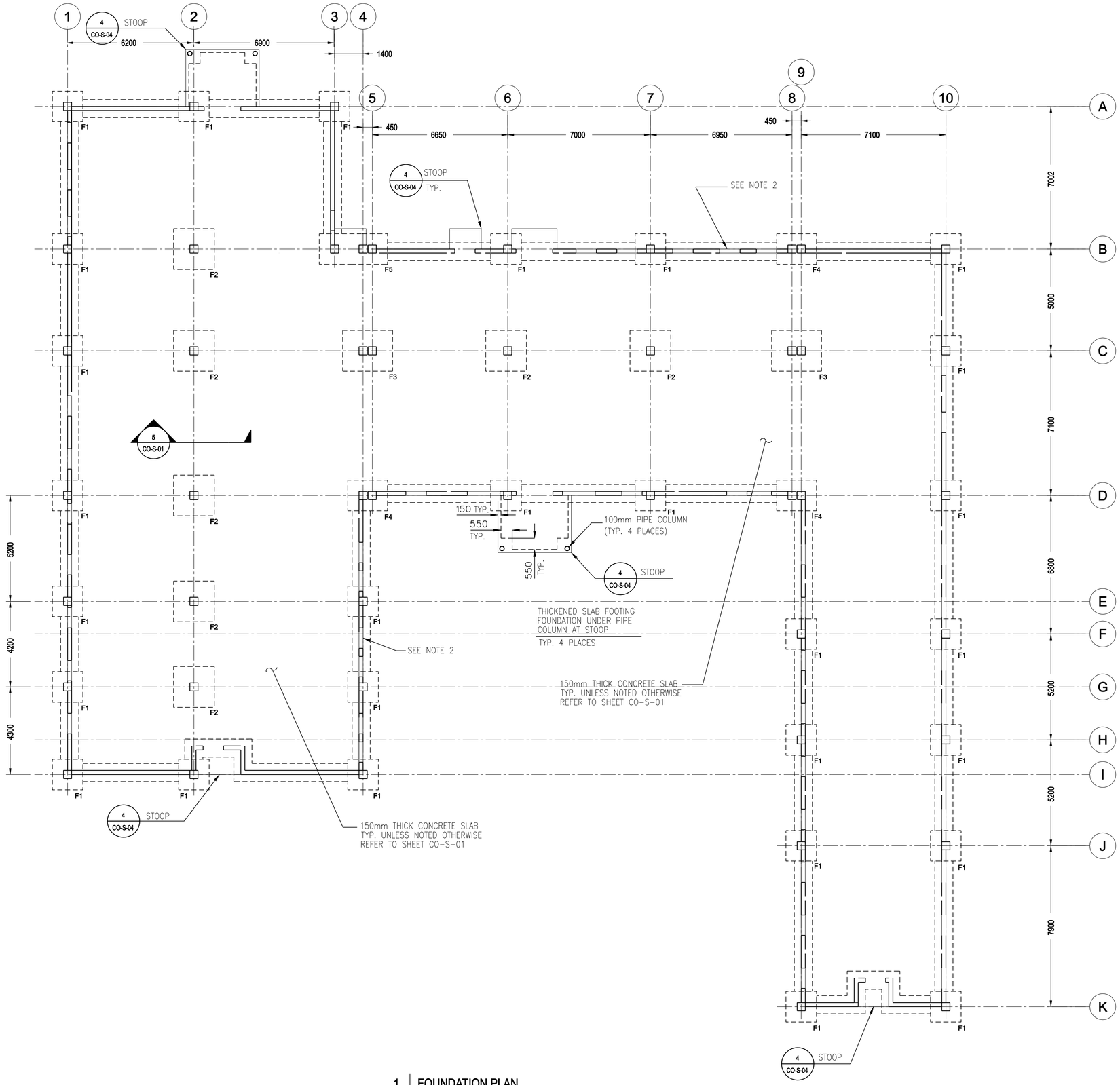

1 | FOUNDATION PLAN
CL-S-01 | SCALE: 1:100

NOTES:

1. CONT. UPPER BOND BEAM 200x200 WITH 2-ø12 CONT. BARS TOP & BOTT.
2. CMU WALL HAS Ø16 @ 600mm WITH FULLY GROUTED CELL WHEN REINFORCEMENT OCCURS.
3. FULLY GROUTED FOR 1.0m WITH Ø16 @ 200, THEN Ø16 @ 600mm, FULLY GROUTED CELL WHEN REINFORCEMENT OCCURS.
4. FULLY GROUTED FOR 1.0m WITH Ø18 @ 200, THEN Ø18 @ 600mm, FULLY GROUTED CELL WHEN REINFORCEMENT OCCURS.
5. FOR EXACT CMU WALL LOCATIONS REFER TO ARCHITECTURAL DWGS.
6. FOR LOCATION OF SLOPED AND DEPRESSED SLABS, SEE ARCH DWGS.
7. SEE ARCH. FOR INTERIOR WALL THICKNESS.
8. SEE TYPICAL DETAILS FOR CONTROL JOINTS AT INTERIOR WALL INTERSECTIONS AND CORNERS.

FOOTING SCHEDULE

FTG TYPE	SIZE (L X W)	DEPTH (D)*	REINF.	
			TOP EW	BOTT EW
F1	1800 X 1800	400	ø 13 @ 180	ø 16 @ 180
F2	2800 X 3400	400	ø 13 @ 180	ø 16 @ 180
F3	2800 X 3400	400	ø 13 @ 180	ø 16 @ 180
F4	1800 X 2100 X 400	400	ø 13 @ 180	ø 16 @ 180
F5	3400 X 1800 X 400	400	ø 13 @ 180	ø 16 @ 180

*TOP FOOTING ELEVATION SHALL BE THE SAME FOR ALL FOOTINGS.

1 0 1 2 3 4 5 6 7 8 9
1:100

SYMBOL	DESCRIPTION	DATE	APR

DESIGNED BY: TCP
DWN BY: TCP
CHK BY: KGO
DATE: 06-27-07
SUBMITTED BY: PHILIP J. DINELLO, P.E. DEV. PROJECTS
FILE NO.: AF0707 DD-CL-S-01

US Army Corps of Engineers Transatlantic Programs Center

ANA REGIONAL BRIGADE
PAKTIKA, AFGHANISTAN

MEDICAL CLINIC
FOUNDATION PLAN

SHEET REFERENCE NUMBER:
DD
CL-S-01

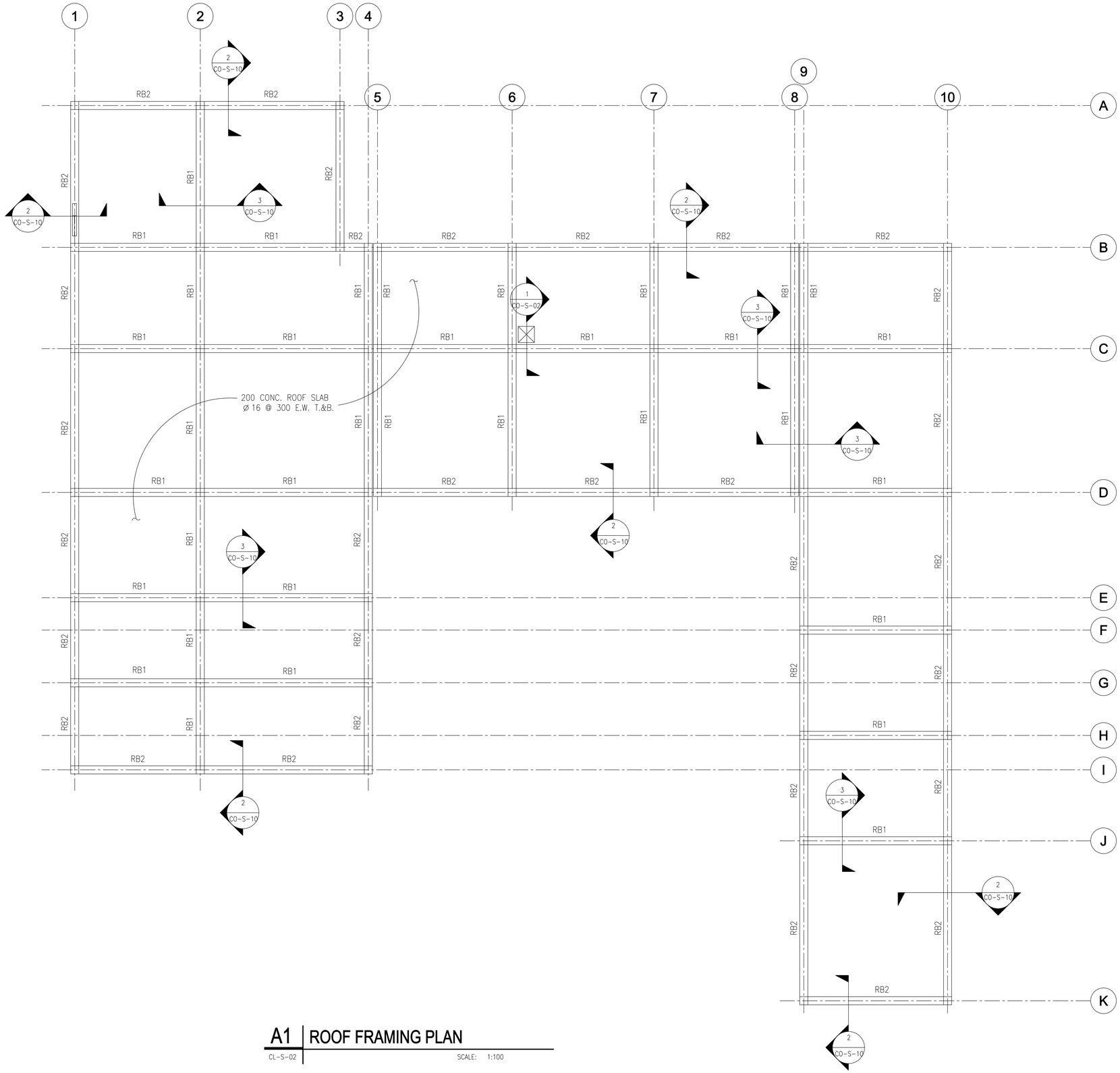

A1 ROOF FRAMING PLAN

CL-S-02

SCALE: 1:100

1:100 DRAWING NOT TO SCALE

SYMBOL	DESCRIPTION	DATE	APR

DESIGNED BY: TCP
DWN BY: TCP
CHK BY: KGO
DATE: 06-27-07
SUBMITTED BY: PANELLO
CHIEF, PDT PACIFICS DEV
FILE NO.: AF070700-CL-S-02

US Army Corps of Engineers
Transatlantic Programs Center

ANA REGIONAL BRIGADE
PAKTIKA, AFGHANISTAN

MEDICAL CLINIC

ROOF FRAMING PLAN

SHEET REFERENCE NUMBER:
DD
CL-S-02

$(getvar, "dwgprefix")$(getvar, "dwgname")$(edtime, 0, MON DD,"" YYYY - H:MMam/pm)

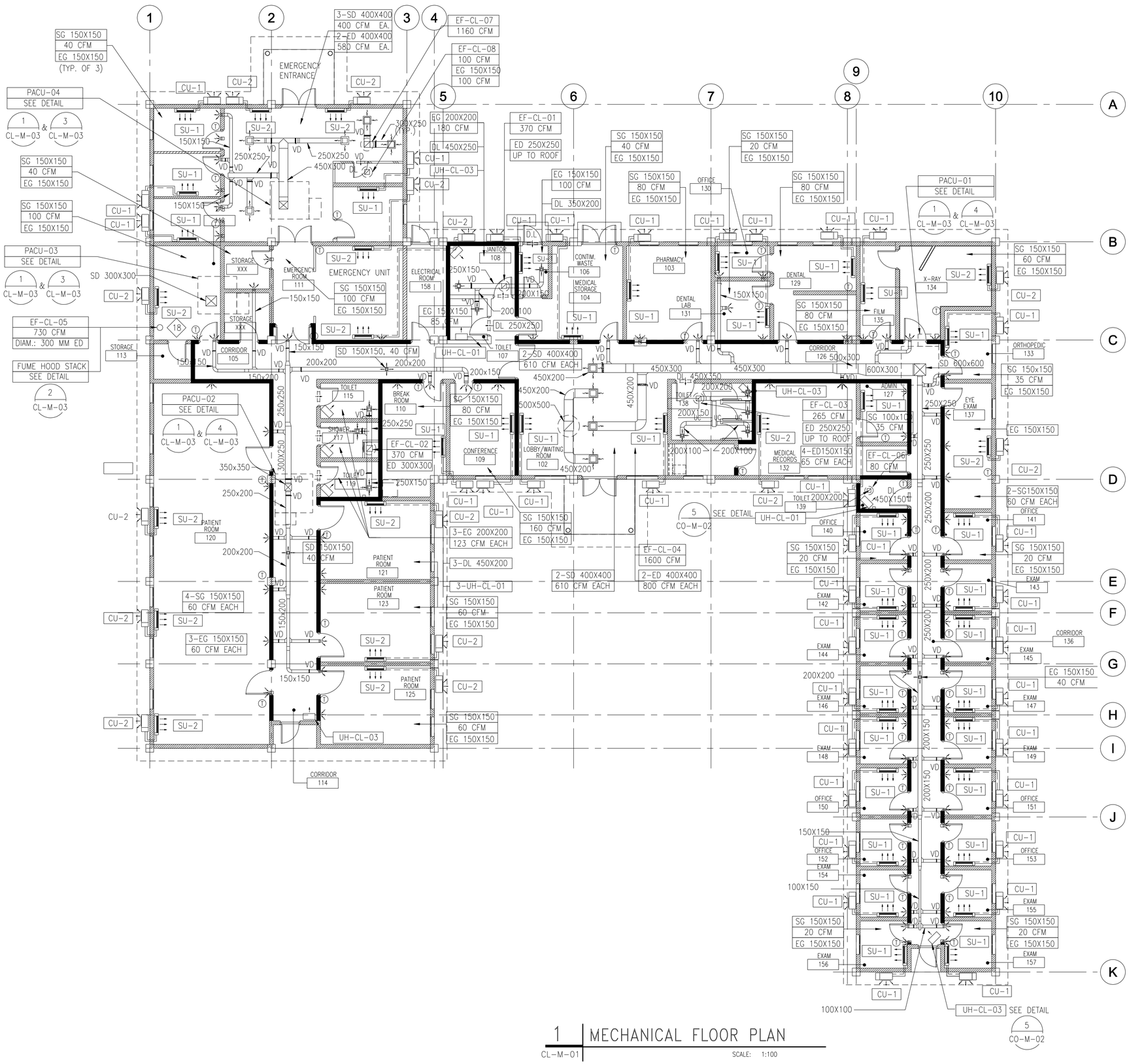

1 MECHANICAL FLOOR PLAN

CL-M-01

SCALE: 1:100

NOTES:

1. FOR STANDARD DETAILS SEE DWG. No. (CO-M-01, 02, 03 & 04).
2. FOR CONTROL DIAGRAMS SEE DWG. No. (CO-M-05).
3. FOR LEGEND AND ABBREVIATION SEE DWG. No. (CO-M-06).
4. ALL OUTSIDE AIR AND RELIEF AIR OPENINGS IN BLOCK WALLS SHALL BE ABOVE TOP OF DOOR AND LINED UP WITH BLOCK COURSING (TYP).

SYMBOL	DESCRIPTION	DATE	APR

DESIGNED BY: M. MAKKAN
DATE: 06-27-07
DWN BY: A. LATIF
SUBMITTED BY: R. CREWAL, CHIEF, BLDG SYSTEMS
CHK BY: A. MAKKAM
FILE NO.: AF0707CL-M-01

US Army Corps of Engineers Transatlantic Programs Center

ANA REGIONAL BRIGADE
PAKTIKA, AFGHANISTAN
MEDICAL CLINIC
MECHANICAL FLOOR PLAN

SHEET REFERENCE NUMBER:
DD
CL-M-01

1:100 DRAWING NOT TO SCALE

$(getvar, "dwgprefix")$(getvar, "dwgname")$(edtime, 0, MON DD",". YYYY - HMMam/pm)

SPLIT SYSTEM AIR CONDITIONING UNIT SCHEDULE (SU)

UNIT NUMBER	COOLING CAPACITY TOTAL	HEATING CAPACITY TOTAL	AIR QUANTITY		ELECTRICAL DATA			REMARKS
	(BTUH)	(BTUH)	CMH	CFM	VOLTS	PHASE	HERTZ	
SU-1	10.000	11.000	350	275	220	1	50	HEAT PUMP
SU-2	16.000	15.000	700	450	220	1	50	HEAT PUMP

CONDENSING UNITS SCHEDULE (CU)

UNIT NUMBER	ELECTRICAL DATA				REMARKS
	KW	VOLTS	PHASE	HERTZ	
CU-1	2.25	220	1	50	HEAT PUMP
CU-2	3.7	220	1	50	HEAT PUMP

ELECTRIC UNIT HEATER SCHEDULE (UH)

UNIT NUMBER	HEATING CAPACITY TOTAL (KW)	HEATING CAPACITY TOTAL (BTUH)	ELECTRICAL DATA			REMARKS
			VOLTS	PHASE	HERTZ	
UH-CL-01	2	6,826	220	1	50	–
UH-CL-02	3	10,239	380	3	50	–
UH-CL-03	5	17060	380	3	50	–

1. FOR MOUNTING HEIGHT SEE ARCHITECTURAL DRAWINGS.
2. MANUFACTURER SHALL PROVIDE ON-OFF SWITCH AND WITH OVERLOAD PROTECTION IN THE UNIT.

AIR CONDITIONING UNIT SCHEDULE (PACKAGED) (PACU)

SYMBOL BUILDING NUMBER	PACU-01	PACU-02	PACU-03	PACU-04
EVAPORATOR FAN				
OUTSIDE AIR FLOW – CMH (CFM)	3700 (2180)	1670 (980)	1240 (730)	2240 (1320)
TOTAL AIR FLOW – CMH (CFM)	3700 (2180)	1670 (980)	1240 (730)	2240 (1320)
EXT. STATIC PRESS. – mmH2O (IN. W.G.)	50.8 (2)	25.4 (1)	13.0 (1/2)	13.0 (1/2)
FAN MOTOR HP	2	1	1	1
COOLING COIL				
TOTAL CAPACITY – KCAL/HR (MBH)	13184 (52.3)	5929 (23.5)	4416 (17.5)	7966 (31.6)
SENSIBLE CAPACITY – KCAL/HR (MBH)	13184 (52.3)	5929 (23.5)	4416 (17.5)	7966 (31.6)
ENT. AIR TEMP. DB – C (F)	37.8 (100)	37.8 (100)	37.8 (100)	37.8 (100)
ENT. AIR TEMP. WB – C (F)	10 (50)	10 (50)	10 (50)	10 (50)
LVG. AIR TEMP. DB – C (F)	24.4 (76)	24.4 (76)	24.4 (76)	24.4 (76)
HEATING COIL				
TOTAL CAPACITY – KW	40.8	18.3	13.7	24.8
TOTAL CAPACITY – MBH	139.3	62.5	46.8	84.5
NUMBER OF STAGES	3	2	2	2
TEMPERATURE RISE – C (F)	35.5 (64)	35.5 (64)	35.5 (64)	35.5 (64)
CONDENSER FAN				
NUMBER OF FANS	1	1	1	1
FAN MOTOR HP	0.5	0.3	0.3	0.3
COMPRESSOR				
NUMBER OF COMPRESSORS	1	1	1	1
ELECTRICAL DATA				
V/PH/HZ	400/3/50	400/3/50	400/3/50	400/3/50
MINIMUM CIRCUIT AMPS (MCA) – (AMP)	40	35	35	35
OPERATING WEIGHT – KG	400	220	200	250
REMARKS	NOTE 1,2,3,4	NOTE 1,2,3,4	NOTE 1,2,3,4,5	NOTE 1,2,3,4

NOTES:

NOTE 1. FILTERS SHALL BE 50mm (2") THROWAWAY TYPE 30x PANEL FILTER PART OF PACU.

NOTE 2. UNITS SHALL BE SUPPLIED WITH HOT GAS BYPASS TO PREVENT COIL FROM FREEZING

NOTE 3. UNITS SHALL BE SUPPLIED WITH ECONOMIZER SYSTEM

NOTE 4. ECONOMIZER SECTION WILL BE SUPPLIED WITH 50mm THICK WASHABLE FILTER

NOTE 5. INTERLOCK WITH FUME HOOD EXHAUST FAN (BY OTHER).

EXHAUST FAN SCHEDULE (EF)

UNIT NUMBER	SERVICE	TYPE	AIR QUANTITY		MINIMUM WHEEL DIAMETER		FAN	STATIC PRESSURE		ELECTRICAL DATA				TEMP CONTROL DIAGRAM	INTERLOCK WITH	DRIVE TYPE	REMARKS
			CMH	CFM	MM	INCHES	RPM	mmH2O	IN W.G.	H.P.	VOLTS	PHASE	HERTZ				
EF-CL-01	TOILET	R-CTFG-GP	625	370	NA	NA	1000	6.4	0.25	1/8	220	1	50	E-4	SWITCH	DIRECT	NOTES 1, 2
EF-CL-02	TOILET	R-CTFG-GP	625	370	NA	NA	1000	6.4	0.25	1/8	220	1	50	E-4	SWITCH	DIRECT	NOTES 1, 2
EF-CL-03	TOILET	R-CTFG-GP	450	265	NA	NA	970	6.4	0.25	1/10	220	1	50	E-4	SWITCH	DIRECT	NOTES 1, 2
EF-CL-04	LOBBY	R-CTFG-GP	2710	1600	NA	NA	620	6.4	0.25	1/2	220	1	50	E-1	PACU-01	DIRECT	NOTES 1, 2
EF-CL-05	LAB	R-CTFG-EP	1235	730	NA	NA	1330	19	0.75	1/3	220	1	50	E-1	PACU-03	DIRECT	NOTES 1, 2
EF-CL-06	TOILET	R-CTFG-GP	135	80	NA	NA	970	6.4	0.25	1/10	220	1	50	E-4	SWITCH	DIRECT	NOTES 1, 2
EF-CL-07	TRIAGE	R-CTFG-GP	1970	1160	NA	NA	1200	6.4	0,25	1/3	220	1	50	E-1	PACU-04	DIRECT	NOTES 1, 2
EF-CL-08	TOILET	R-CTFG-GP	170	100	NA	NA	970	3.2	0,13	1/10	220	1	50	E-4	SWITCH	DIRECT	NOTES 1, 2

MANUFACTURER SHALL PROVIDE NECESSARY TRANSFORMERS ON ALL UNITS TO MEET ELECTRICAL REQUIREMENT.

NOTES:-

NOTE 1. SUPPLIED WITH BACKDRAFT DAMPER

NOTE 2. ALL EXHAUST FANS WITH SINGLE PHASE POWER ARE TO BE PROVIDED w/ A FACTORY MOUNTED DISCONNECT SWITCH.

FAN SCHEDULE TYPE – LEGEND

(REF. EXHAUST AND SUPPLY FAN SCHEDULES)

R-CTFG-GP

R =ROOF
W =WALL
IL =INLINE
CL =CEILING

GP = GENERAL PURPOSE
EP = EXPLOSION PROOF
DB = DOWN BLAST
UB = UP BLAST
UT = UTILITY SET

CTFG = CENTRIFUGAL
PROP = PROPELLER
TUBA = TUBE AXIAL

SYMBOL	DESCRIPTION	DATE	APR

DESIGNED BY: M.MAKKIN
DATE: 06-27-07
SUBMITTED BY: R. CREWAL CHIEF, PDT BLDG SYSTEMS
DWN BY: A.LATIF
FILE NO.:
CHK BY: A.MAKRAM
AF0707CL-M-02

US Army Corps of Engineers Transatlantic Programs Center

ANA REGIONAL BRIGADE
PAKTIKA, AFGHANISTAN

MEDICAL CLINIC
SCHEDULES

SHEET REFERENCE NUMBER:
DD
CL-M-02

$(getvar, "dwgprefix")$(getvar, "dwgname")$(edtime, 0, MON DD",".YYYY - HHMMam/pm)

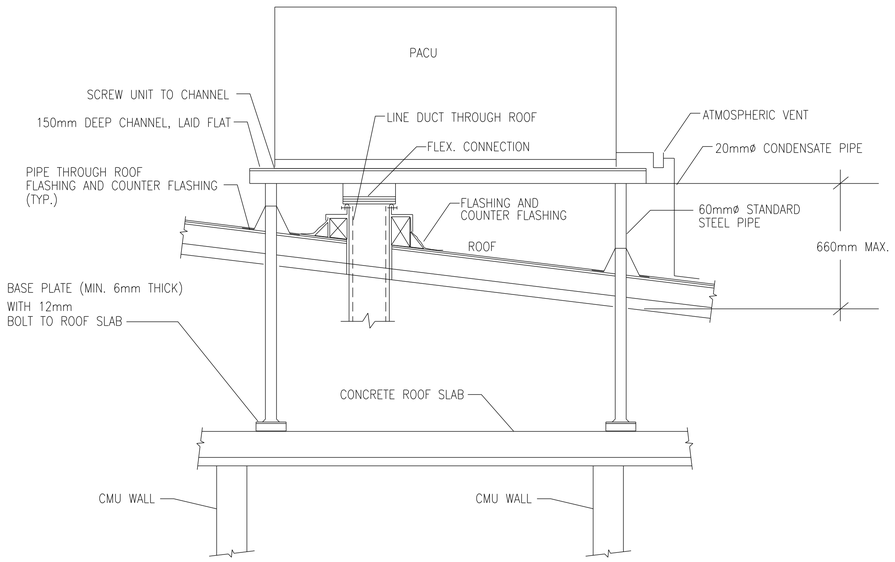

1 UNIT MOUNTING DETAIL

CL-M-03 SCALE: N.T.S

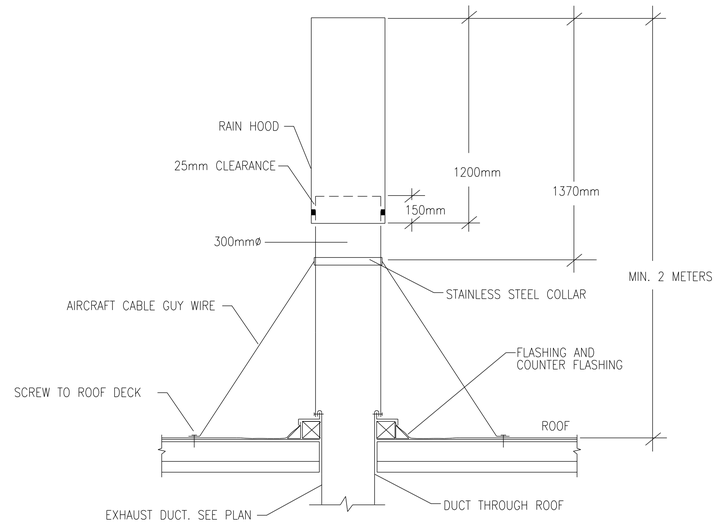

2 FUME HOOD STACK DETAIL

CL-M-03 SCALE: N.T.S

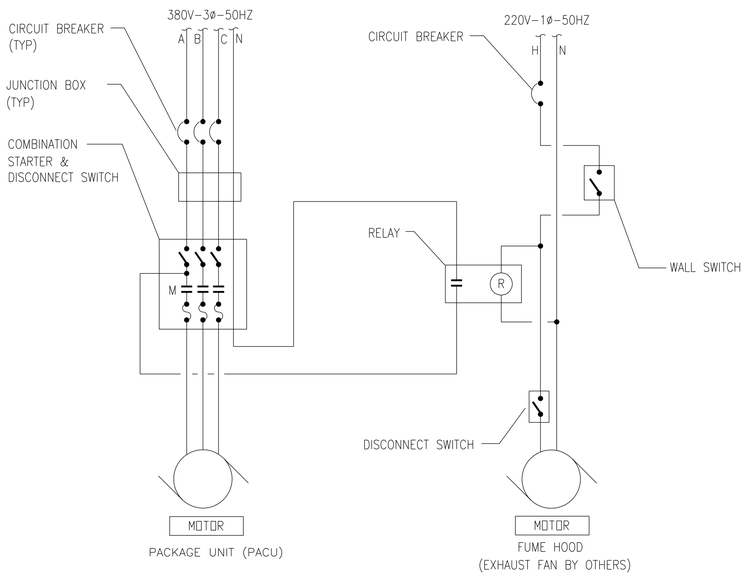

3 MAKE UP AIR CONTROL DIAGRAM

CL-M-03 SCALE: N.T.S

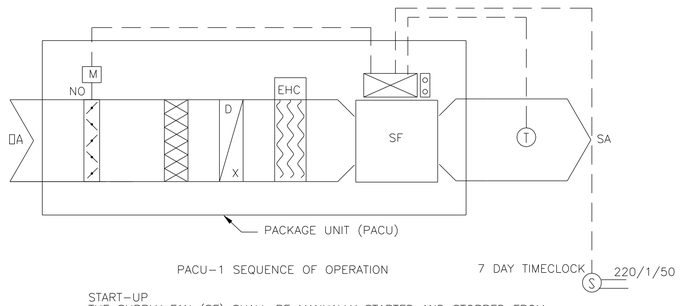

PACU-1 SEQUENCE OF OPERATION

START-UP
THE SUPPLY FAN (SF) SHALL BE MANUALLY STARTED AND STOPPED FROM MANUAL FAN ON-OFF SWITCH AT THE SEVEN DAY PROGRAMMABLE TIMECLOCK.

TEMPERATURE CONTROL
THE UNIT (PACU) SHALL BE STAGED BY THE DISCHARGE THERMOSTAT (T) TO MAINTAIN DISCHARGE TEMPERATURE.

SET POINT	
CLG	HTG
21C	18C

THE ELECTRIC HEATING COIL (EHC) SHALL BE STAGED BY THE DISCHARGE THERMOSTAT (T) TO MAINTAIN DISCHARGE TEMPERATURE. A DECREASE IN TEMPERATURE BELOW THE HEATING SET POINT SHALL INCREMENTALLY STAGE ON THE HEATING COIL. THE HEATING COIL SHALL BE INTERLOCKED WITH THE SUPPLY FAN (SF) TO PREVENT OPERATION WHEN THE SF IS OFF.

4 TEMPERATURE CONTROL DIAGRAM PACU-1 & 2

CL-M-03 SCALE: N.T.S

DRAWING NOT TO SCALE

SYMBOL	DESCRIPTION	DATE	APR

DESIGNED BY: M.MAKKIN
DATE: 06-27-07
DWN. BY: A.LATIF
SUBMITTED BY: R. GREWAL, CHIEF, DPW BLDG SYSTEMS
CHK. BY: A.MAKKAM
FILE NO.: AF0707CL-M-03

US Army Corps of Engineers Transatlantic Programs Center

ANA REGIONAL BRIGADE
PAKTIKA, AFGHANISTAN

MEDICAL CLINIC

MECHANICAL DETAILS

SHEET REFERENCE NUMBER:
DD
CL-M-03

$(getvar, "dwgprefix")$(getvar, "dwgname")$(edtime, 0, MON DD",", YYYY - HHMMam/pm)

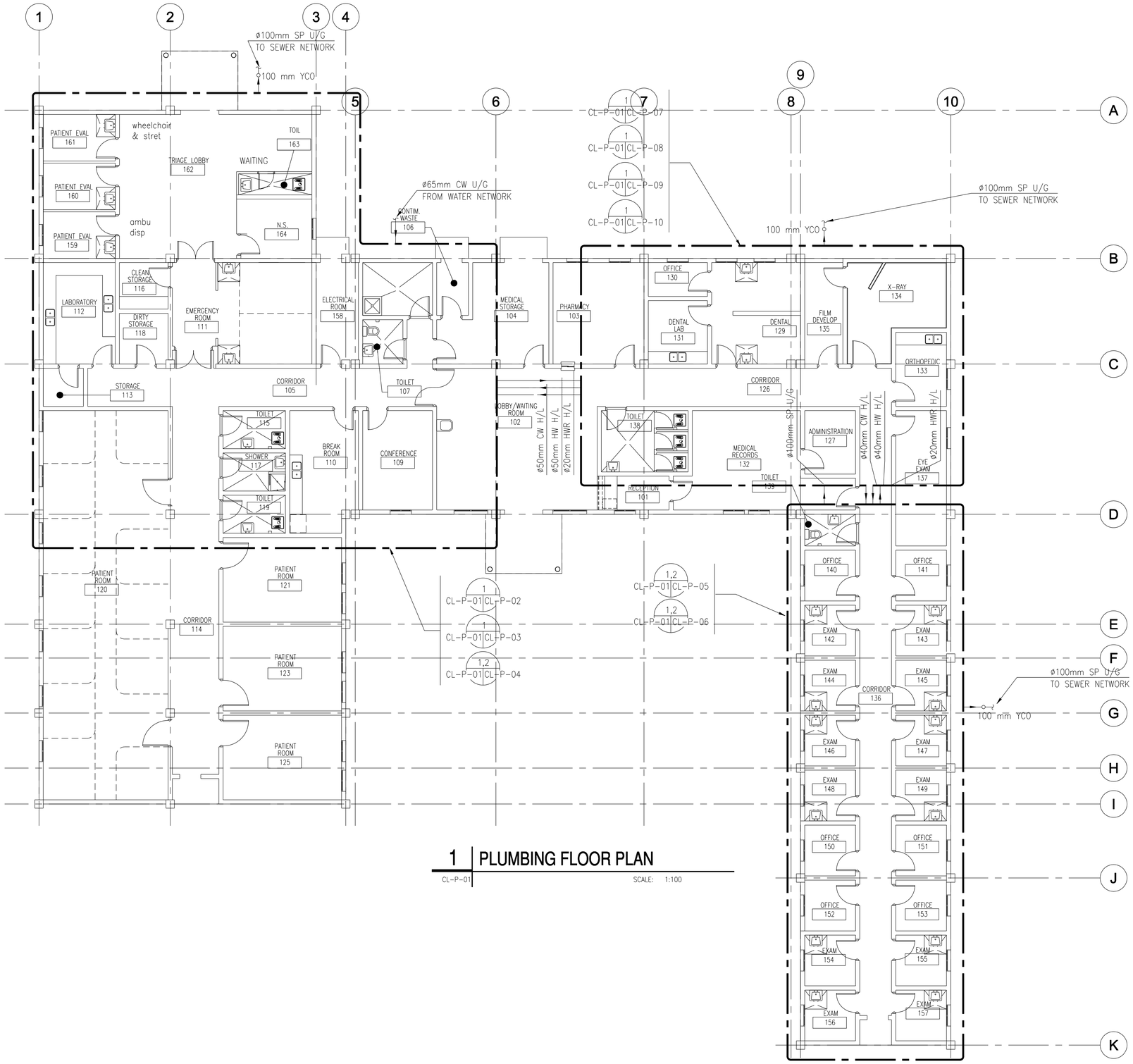

1 PLUMBING FLOOR PLAN

CL-P-01

SCALE: 1:100

NOTE:

1. FOR PLUMBING LEGEND, ABBREVIATIONS, NOTES, SCHEDULES, AND STANDARD DETAILS SEE SHEETS CO-P-01 THRU CO-P-07.

1 0 1 2 3 4 5 6 7 8 9

1:100

DRAWING NOT TO SCALE

SYMBOL	DESCRIPTION	DATE	APR

DESIGNED BY: HAMAX E.
DWN BY: HAMAX M.
CHK BY: G. TAMAB
DATE: 06-27-07
SUBMITTED BY: R. CREWAL CHIEF, PDT BLDG SYSTEMS
FILE NO.: AF070/CL-P-01

US Army Corps of Engineers Transatlantic Programs Center

ANA REGIONAL BRIGADE
PAKTIKA, AFGHANISTAN

MEDICAL CLINIC

PLUMBING FLOOR PLAN

SHEET REFERENCE NUMBER:
DD
CL-P-01

$(getvar, "dwgprefix")$(getvar, "dwgname")$(edtime, 0, MON DD"", YYYY - H:MMam/pm)

NOTE:

1. FOR PLUMBING LEGEND, ABBREVIATIONS, NOTES, SCHEDULES, AND STANDARD DETAILS SEE SHEETS CO-P-01 THRU CO-P-07.

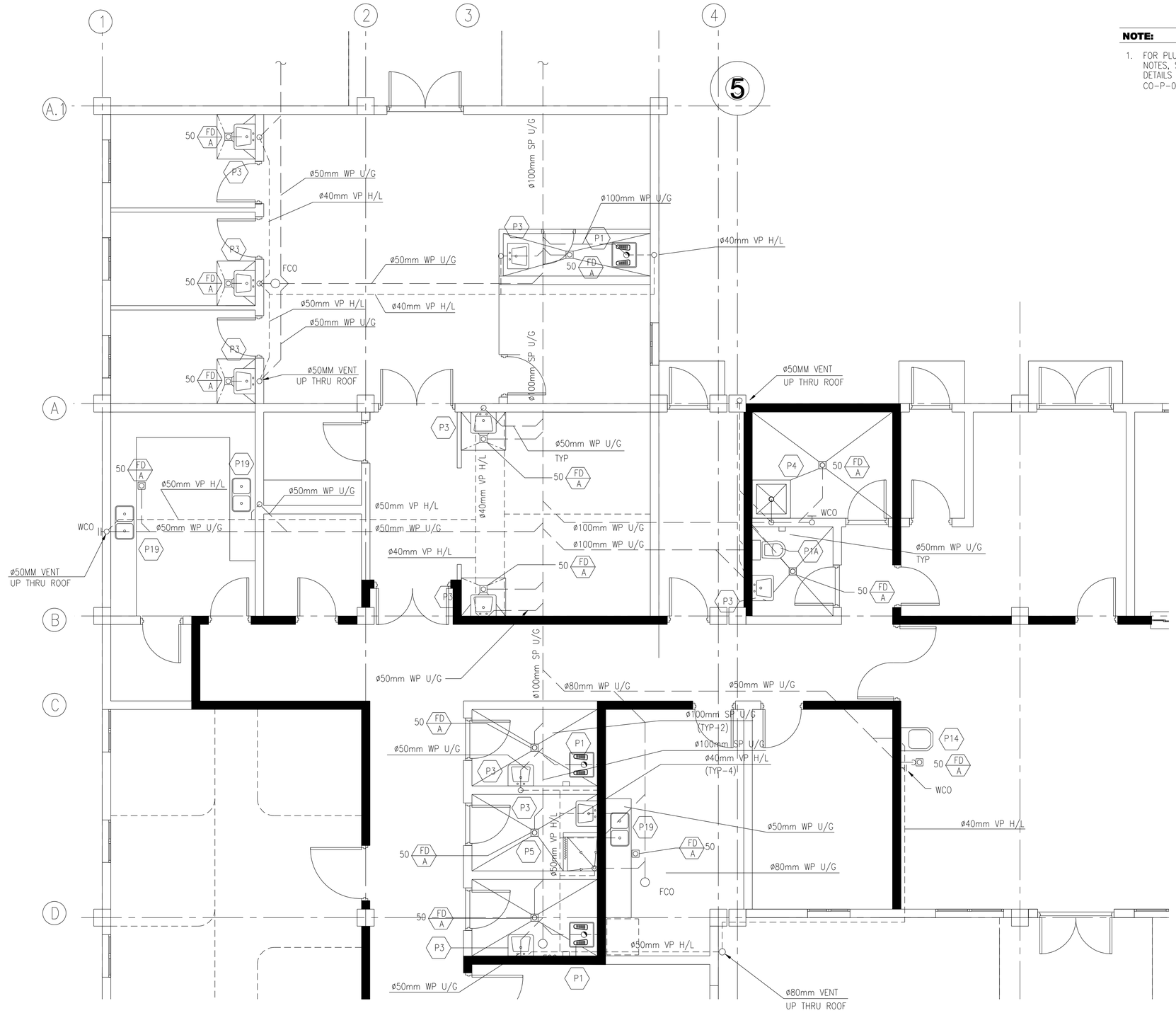

1 DRAINAGE PIPING PLAN

CL-P-02

SCALE: 1:50

1 0 1 2 3 4
1:50

DRAWING NOT TO SCALE

SYMBOL	DESCRIPTION	DATE	APR

DESIGNED BY: HANXX E.
DATE: 06-27-07
DWN. BY: HANXX M.
SUBMITTED BY: R. CREWAL CHIEF, PROJ. BLDG SYSTEMS
CHK BY: G. TAXWAB
FILE NO.: AF0707CL-P-02

US Army Corps of Engineers Transatlantic Programs Center

ANA REGIONAL BRIGADE
PAKTIKA, AFGHANISTAN

MEDICAL CLINIC

DRAINAGE PIPING PLAN

SHEET REFERENCE NUMBER:
DD
CL-P-02

$(getvar, "dwgprefix")$(getvar, "dwgname")$(edtime, O, MON DD"," YYYY - HHMMam/pm)

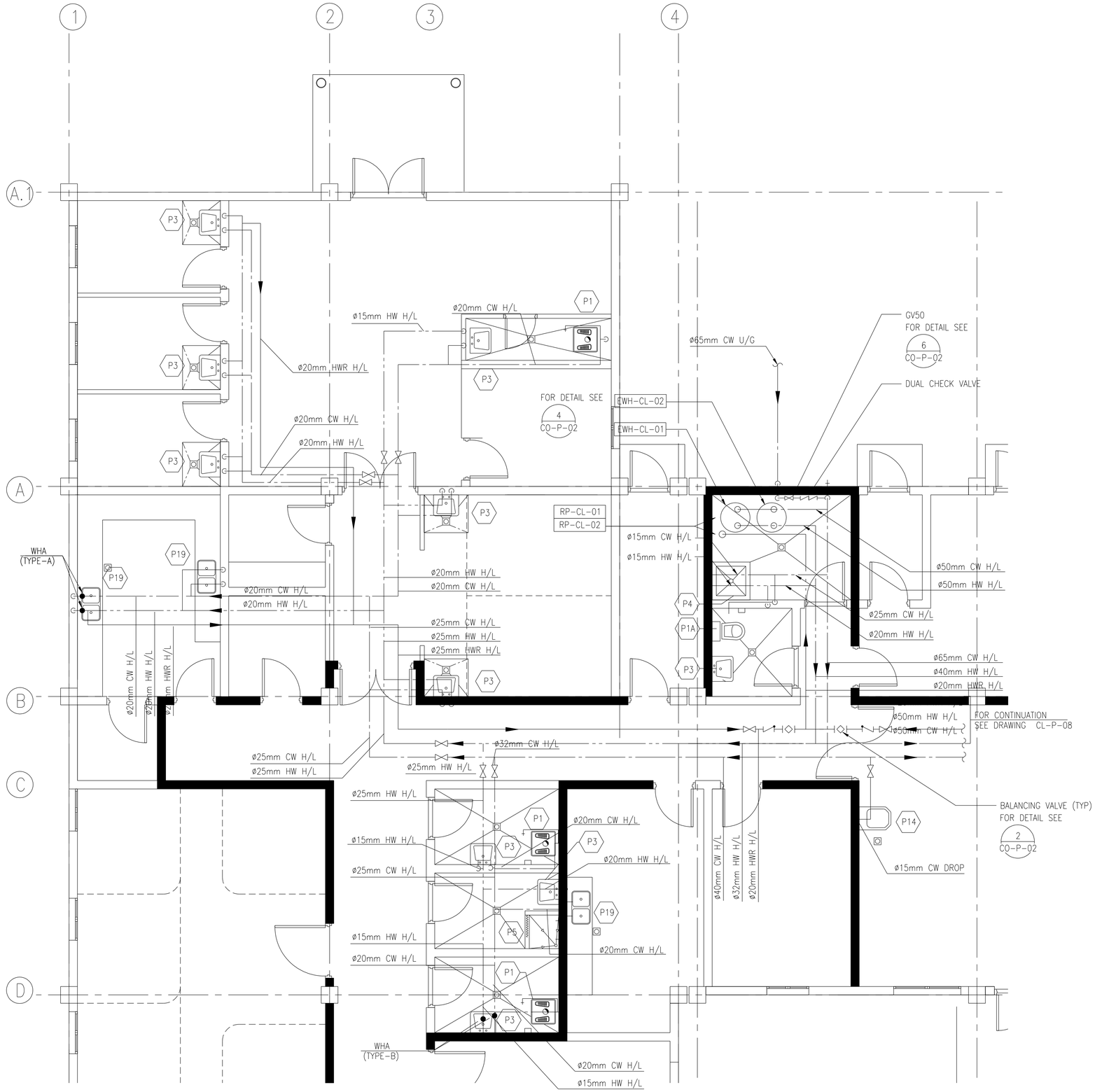

1 CW & HW PIPING PLAN

CL-P-03 SCALE: 1:50

NOTES:

1. FOR PLUMBING LEGEND, ABBREVIATIONS, NOTES, SCHEDULES, AND STANDARD DETAILS SEE SHEETS CO-P-01 THRU CO-P-07.
2. SEE SHEET CL-P-01 FOR ELECTRIC WATER HEATER AND RECIRCULATING PUMPS SCHEDULES.

1 0 1 2 3 4
1:50

DRAWING NOT TO SCALE

SYMBOL	DESCRIPTION	DATE	APR

DESIGNED BY: HANXX E.
DATE: 06-27-07
DWN BY: HANXX M.
SUBMITTED BY: R. GREWAL
CHIEF, PT BLDG SYSTEMS
CHK BY: G. TAXAB
FILE NO.: AF0707CL-P-03

US Army Corps of Engineers
Transatlantic Programs Center

ANA REGIONAL BRIGADE
PAKTIKA, AFGHANISTAN

MEDICAL CLINIC

CW & HW PIPING PLAN

SHEET REFERENCE NUMBER:
DD
CL-P-03

$(getvar, "dwgprefix")$(getvar, "dwgname")$(edtime, 0, MON DD", YYYY - HHMMam/pm)

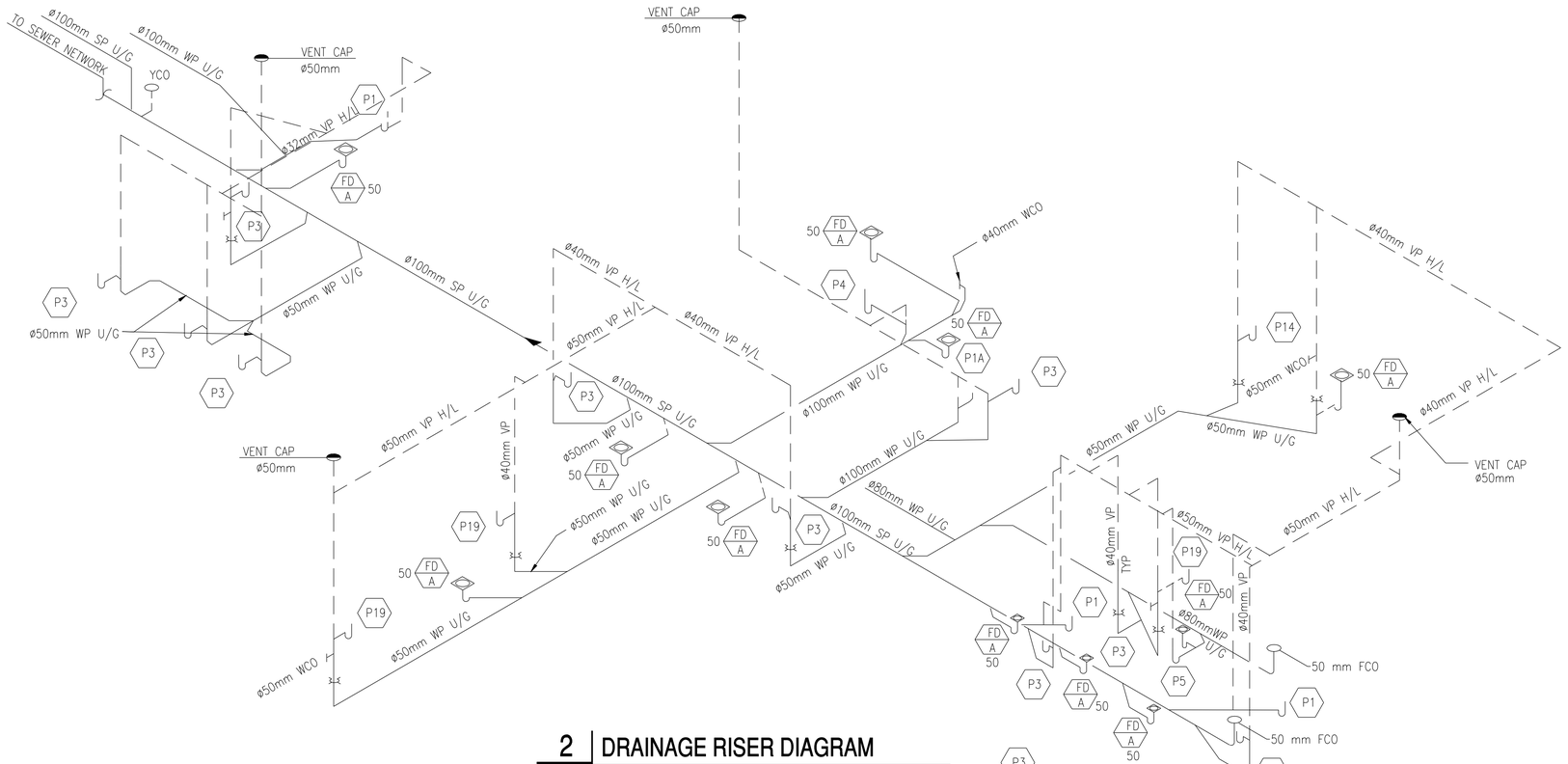

2 DRAINAGE RISER DIAGRAM

CL-P-04

SCALE: N.T.S

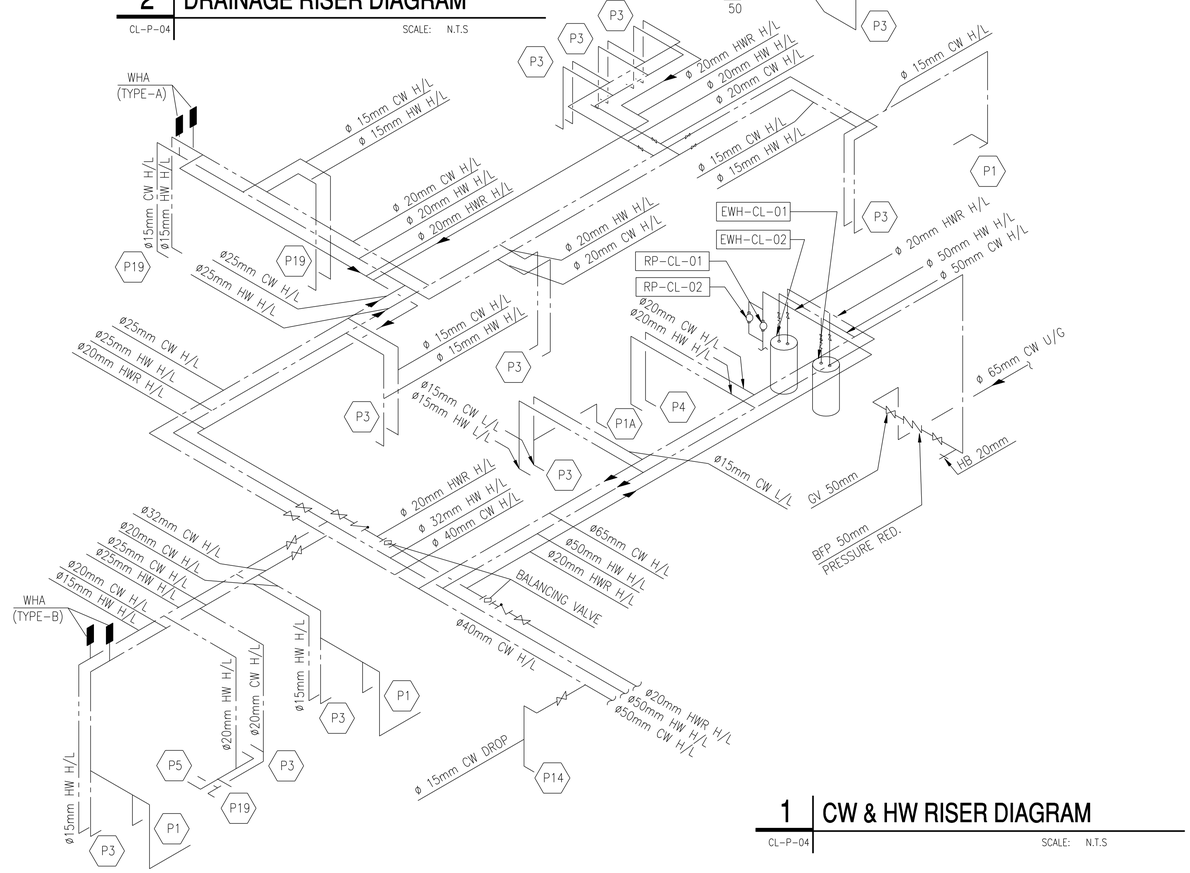

1 CW & HW RISER DIAGRAM

CL-P-04

SCALE: N.T.S

NOTES:

1. FOR PLUMBING LEGEND, ABBREVIATIONS, NOTES, SCHEDULES, AND STANDARD DETAILS SEE SHEETS CO-P-01 THRU CO-P-07.
2. SEE SHEET CL-P-01 FOR ELECTRIC WATER HEATER AND RECIRCULATING PUMPS SCHEDULES.

DRAWING NOT TO SCALE

SYMBOL	DESCRIPTION	DATE	APR

DESIGNED BY: HAMAX E.
DATE: 06-27-07
DWN BY: HAMX.M.
SUBMITTED BY: R. GREWAL, CHIEF, BLDG SYSTEMS
CHK BY: G. TAWAB
FILE NO.: AF0707CL-P-04

US Army Corps of Engineers
Transatlantic Programs Center

ANA REGIONAL BRIGADE
PAKTIKA, AFGHANISTAN

MEDICAL CLINIC

PLUMBING RISER DIAGRAMS

SHEET REFERENCE NUMBER:
DD
CL-P-04

$(getvar, "dwgprefix")$(getvar, "dwgname")$(edtime, O, MON DD", YYYY - H:MMam/pm)

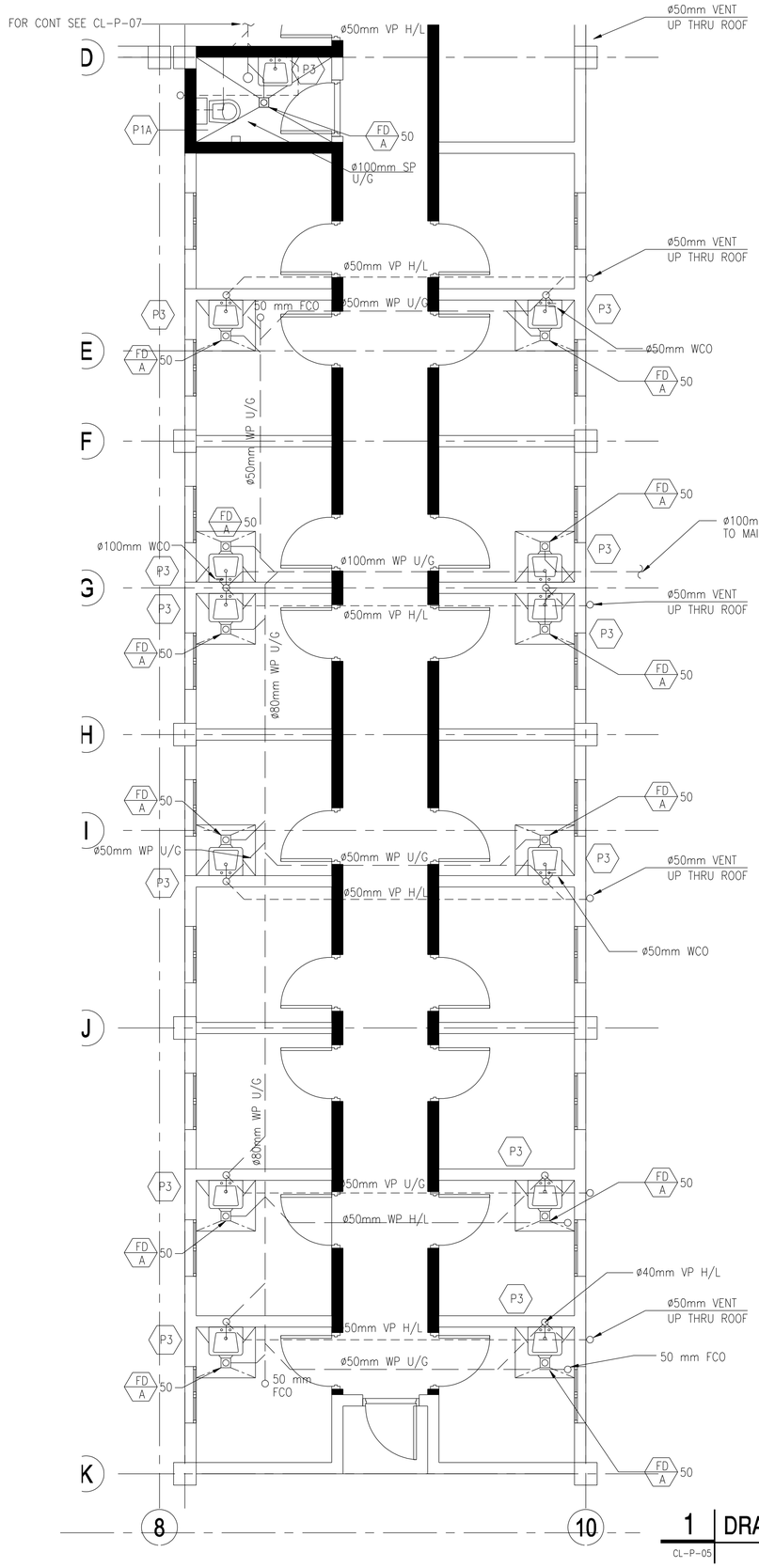

1 DRAINAGE PIPING PLAN

CL-P-05 SCALE: 1:50

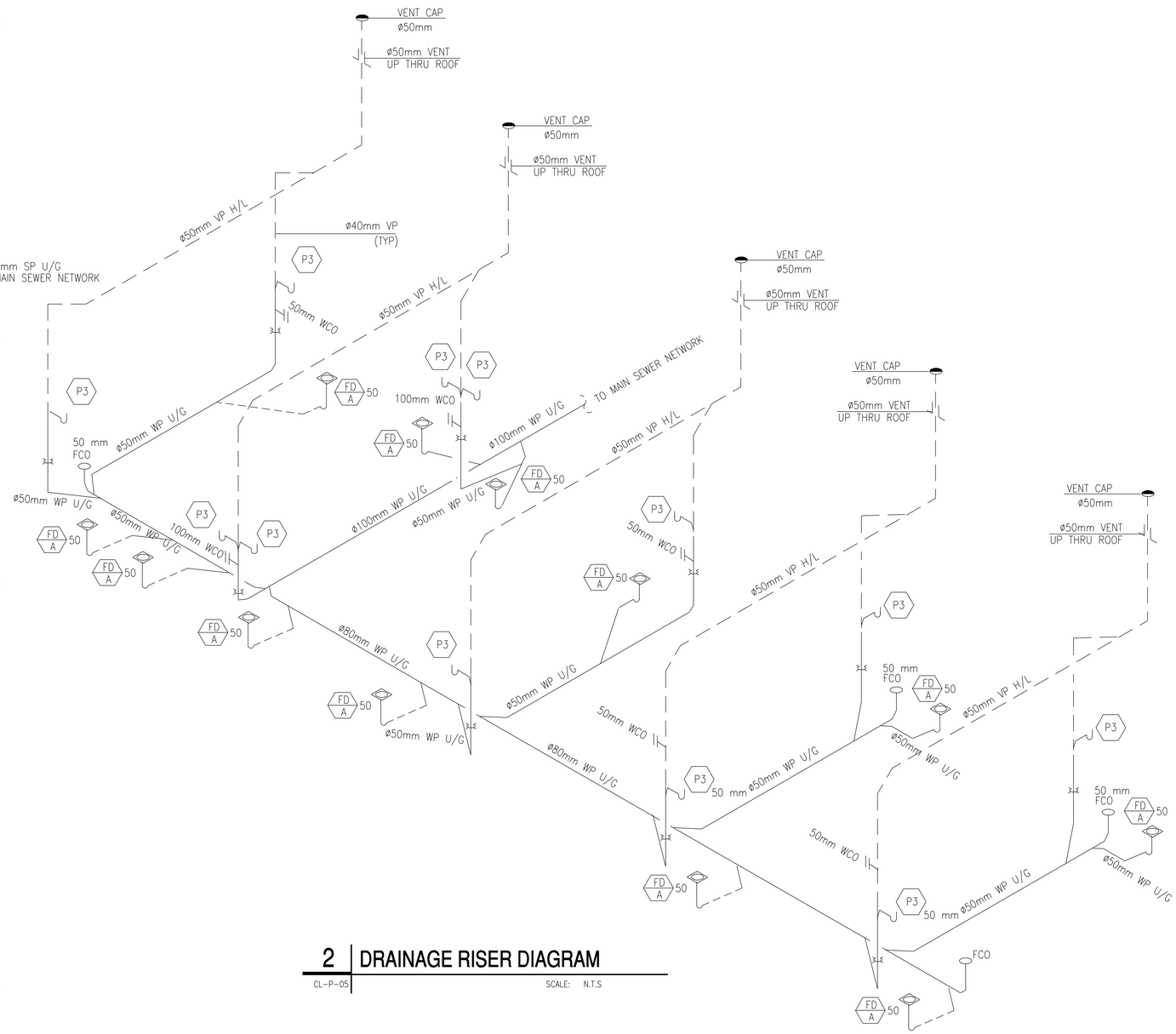

2 DRAINAGE RISER DIAGRAM

CL-P-05 SCALE: N.T.S

NOTE:

1. FOR PLUMBING LEGEND, ABBREVIATIONS, NOTES, SCHEDULES, AND STANDARD DETAILS SEE SHEETS CO-P-01 THRU CO-P-07.

1 0 1 2 3 4
1:50 DRAWING NOT TO SCALE

SYMBOL	DESCRIPTION	DATE	APR

DESIGNED BY: HAMAX E.
DWN BY: HAMAX M.
CHK BY: G. TAMAB
DATE: 06-27-07
SUBMITTED BY: R. GREWAL CHIEF, BLDG SYSTEMS
FILE NO.: AF0707CL-P-05

US Army Corps of Engineers Transatlantic Programs Center

ANA REGIONAL BRIGADE
PAKTIKA, AFGHANISTAN
MEDICAL CLINIC
ENLARGED DRAINAGE PIPING PLAN & RISER DIAGRAM

SHEET REFERENCE NUMBER:
DD
CL-P-05

XX-X-XX
${getvar, "dwgprefix"}${getvar, "dwgname"}${edtime, O, MON DD", YYYY - H:MMam/pm}

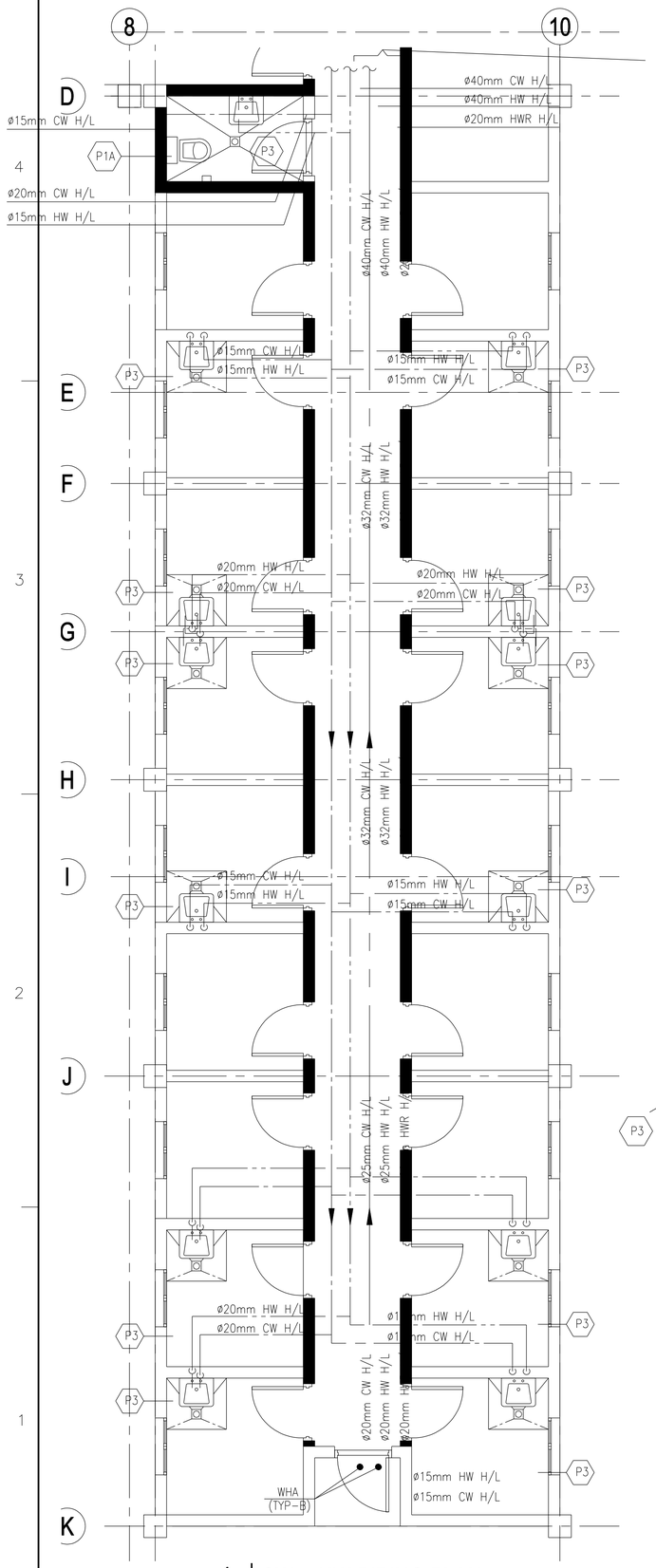

1 CW & HW PIPING PLAN

CL-P-06 SCALE: 1:50

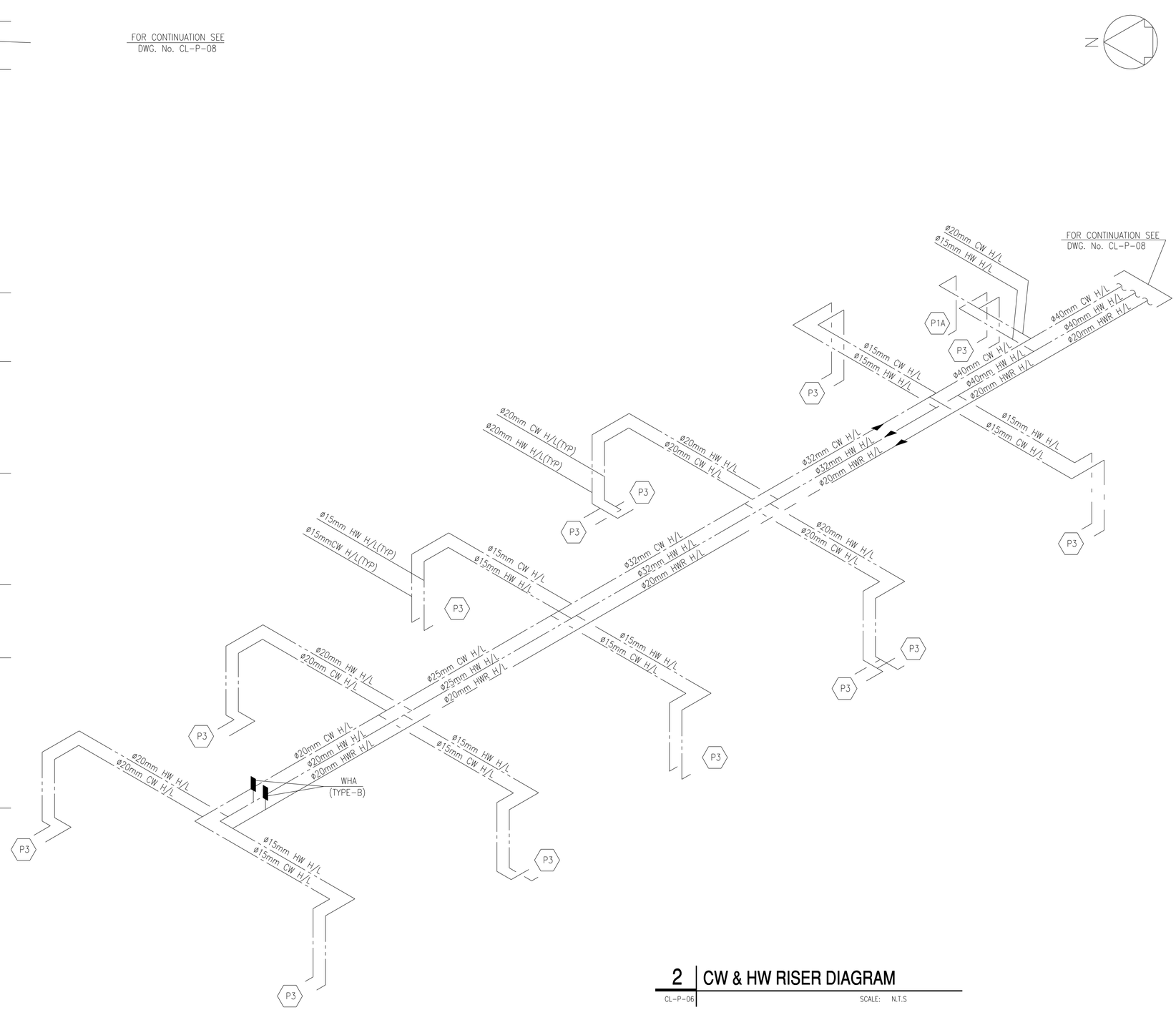

2 CW & HW RISER DIAGRAM

CL-P-06 SCALE: N.T.S

NOTE:

1. FOR PLUMBING LEGEND, ABBREVIATIONS, NOTES, SCHEDULES, AND STANDARD DETAILS SEE SHEETS CO-P-01 THRU CO-P-07.

1 0 1 2 3 4
1:50

DRAWING NOT TO SCALE

SYMBOL	DESCRIPTION	DATE	APR

DESIGNED BY: HAMMX E.
DATE: 06-27-07
DWN BY: HAMMX M.
SUBMITTED BY: R. CREWAL
CHK BY: G. MAWAB
DIRECTOR BLDG SYSTEMS
FILE NO.: AF070CL-P-06

US Army Corps of Engineers
Transatlantic Programs Center

ANA REGIONAL BRIGADE
PAKTIKA, AFGHANISTAN

MEDICAL CLINIC

ENLARGED CW & HW PIPING PLAN & RISER DIAGRAM

SHEET REFERENCE NUMBER:
DD
CL-P-06

$(getvar, "dwgprefix")$(getvar, "dwgname")$(edtime, O, MON DD", YYYY - HH:MMam/pm)

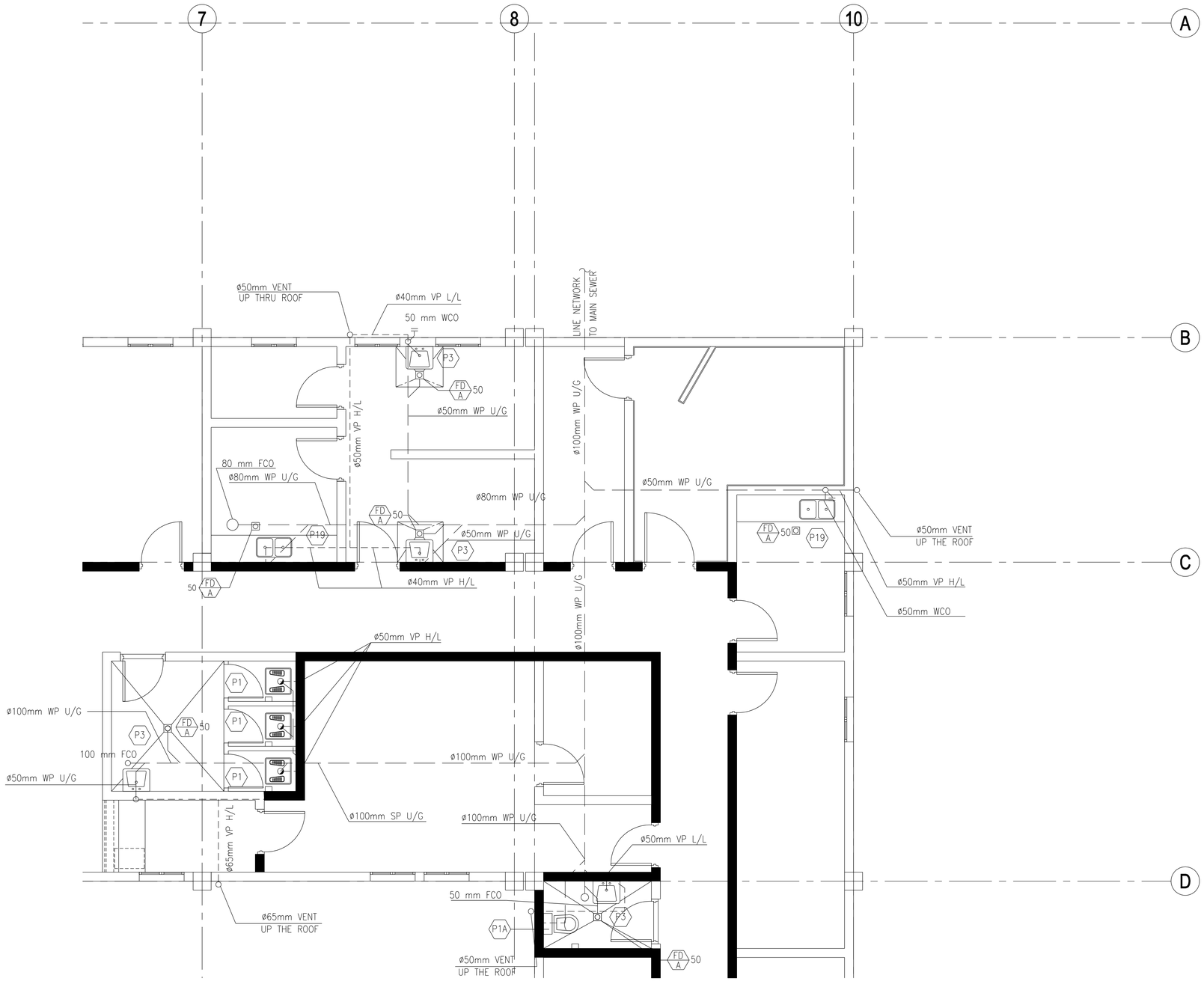

1 DRAINAGE PIPING PLAN

CL-P-07

SCALE: 1:50

NOTE:

1. FOR PLUMBING LEGEND, ABBREVIATIONS, NOTES, SCHEDULES, AND STANDARD DETAILS SEE SHEETS CO-P-01 THRU CO-P-07.

1 0 1 2 3 4

1:50

DRAWING NOT TO SCALE

SYMBOL	DESCRIPTION	DATE	APR

DESIGNED BY: HAMAX E.
DATE: 06-27-07
DWN BY: HAMX.M.
SUBMITTED BY: R. CREWAL CHIEF, BLDG SYSTEMS
CHK BY: G. TAWAB
FILE NO.: AF0707CL-P-07

US Army Corps of Engineers Transatlantic Programs Center

ANA REGIONAL BRIGADE
PAKTIKA, AFGHANISTAN

MEDICAL CLINIC

ENLARGED DRAINAGE PIPING PLAN

SHEET REFERENCE NUMBER:
DD
CL-P-07

$(getvar, "dwgprefix")$(getvar, "dwgname")$(edtime, 0, MON DD," YYYY - HAMMam/pm)

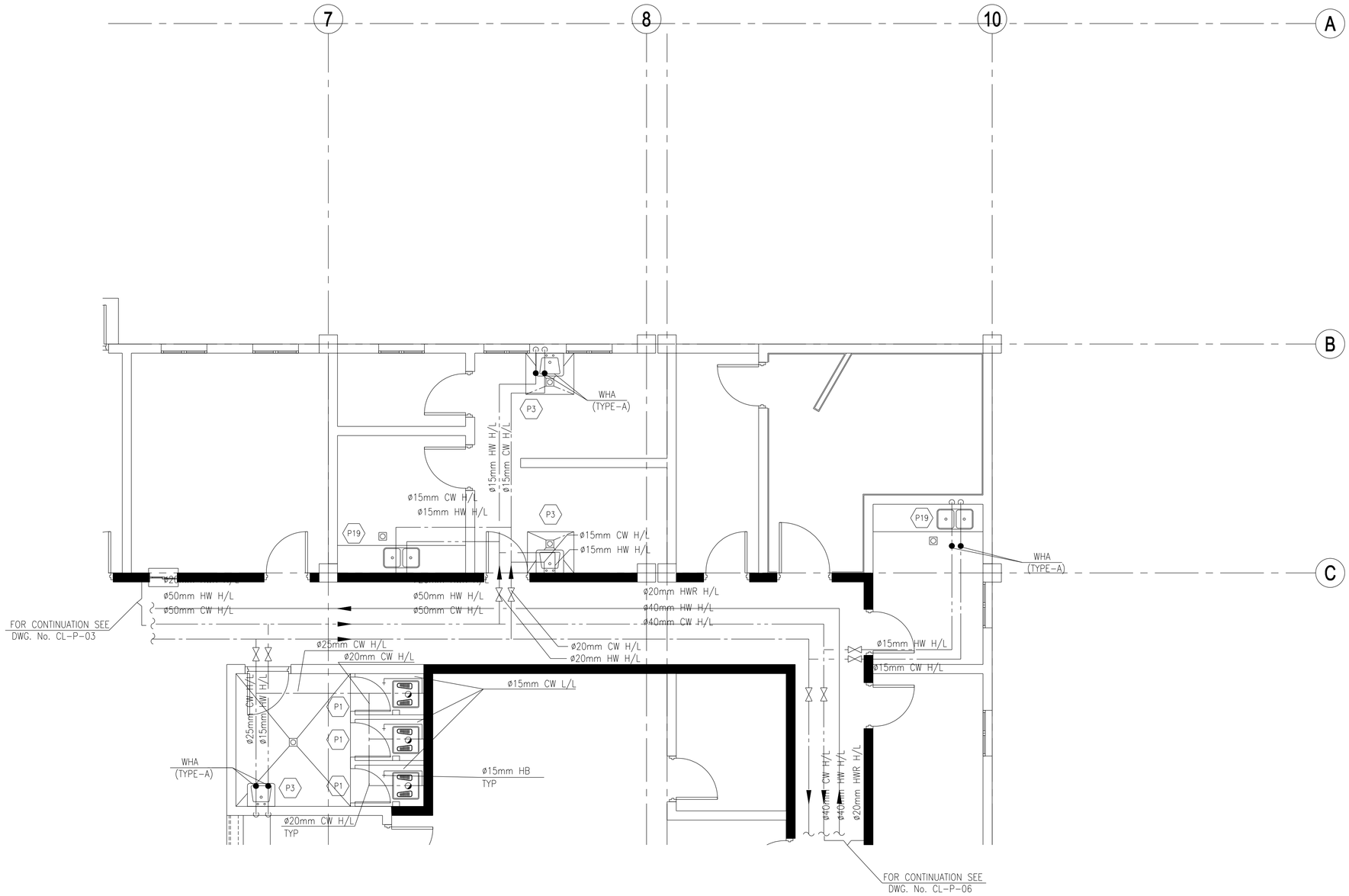

1 CW & HW PIPING PLAN

CL-P-08 SCALE: 1:50

NOTE:

1. FOR PLUMBING LEGEND, ABBREVIATIONS, NOTES, SCHEDULES, AND STANDARD DETAILS SEE SHEETS CO-P-01 THRU CO-P-07.

1 0 1 2 3 4
1:50

DRAWING NOT TO SCALE

SYMBOL	DESCRIPTION	DATE	APR

DESIGNED BY: HAMAX E.
DATE: 06-27-07
DWN BY: HAMAX M.
SUBMITTED BY: R. GREWAL CHIEF, BLDG SYSTEMS
CHK BY: G. TAWAB
FILE NO.: AF070/CL-P-08

US Army Corps of Engineers
Transatlantic Programs Center

ANA REGIONAL BRIGADE
PAKTIKA, AFGHANISTAN
MEDICAL CLINIC
ENLARGED CW & HW PIPING PLAN
BUILDING 2

SHEET REFERENCE NUMBER:
DD
CL-P-08

$(getvar, "dwgprefix")$(getvar, "dwgname")$(edtime, 0, MON DD"", YYYY - H:MMam/pm)

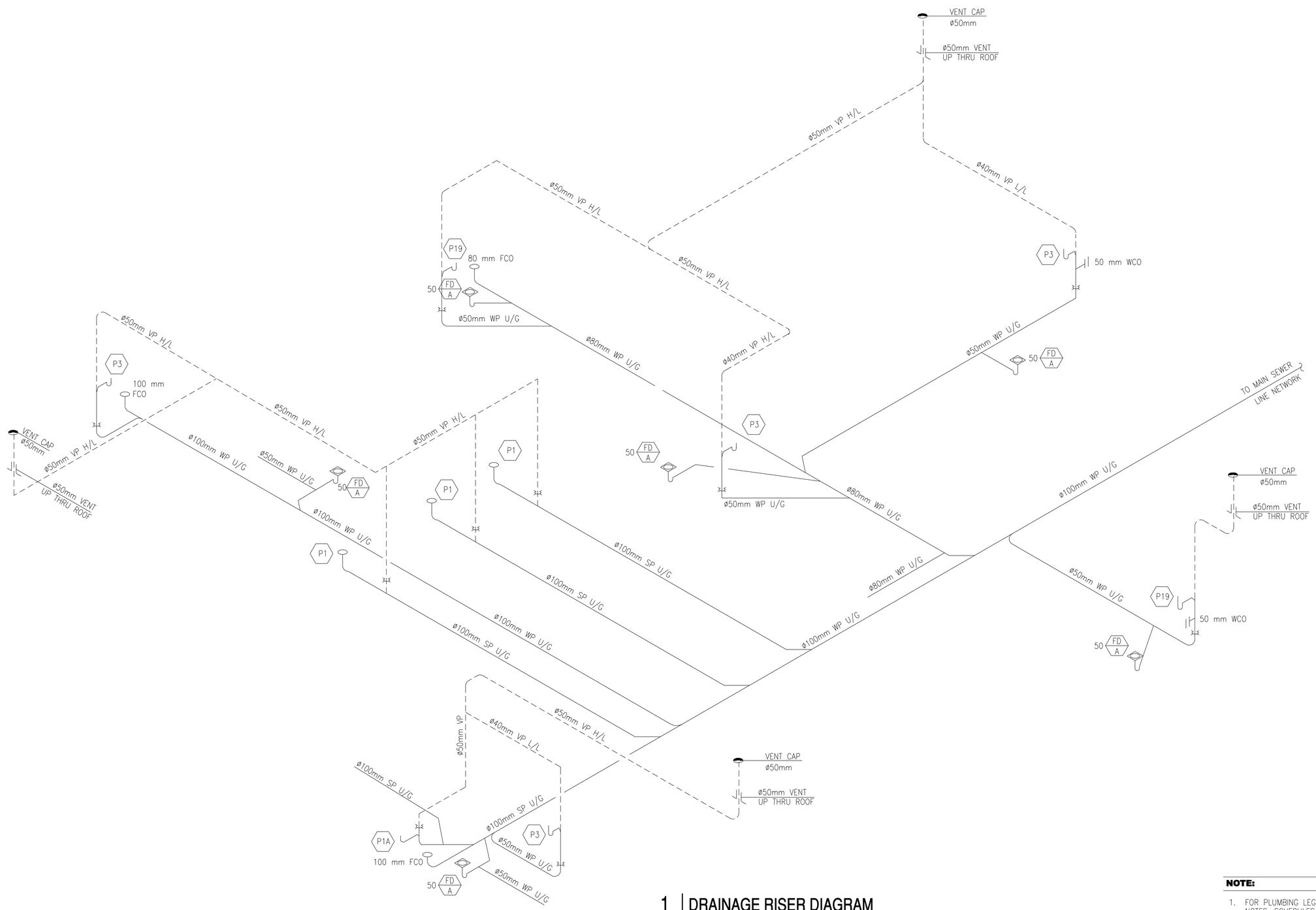

1 DRAINAGE RISER DIAGRAM

CL-P-09

SCALE: N.T.S

NOTE:

1. FOR PLUMBING LEGEND, ABBREVIATIONS, NOTES, SCHEDULES, AND STANDARD DETAILS SEE SHEETS CO-P-01 THRU CO-P-07.

DRAWING NOT TO SCALE

SYMBOL	DESCRIPTION	DATE	APR

DESIGNED BY: HANXX E.
DWN BY: HANXX M.
CHK BY: G. TAWAB
DATE: 06-27-07
SUBMITTED BY: R. GREWAL CHIEF, BY BLDG SYSTEMS
FILE NO.: AF0707CL-P-09

US Army Corps of Engineers Transatlantic Programs Center

ANA REGIONAL BRIGADE
PAKTIKA, AFGHANISTAN
MEDICAL CLINIC
DRAINAGE RISER DIAGRAM

SHEET REFERENCE NUMBER:
DD
CL-P-09

$(getvar, "dwgprefix")$(getvar, "dwgname")$(edtime, 0, MON DD"," YYYY - HHMMam/pm)

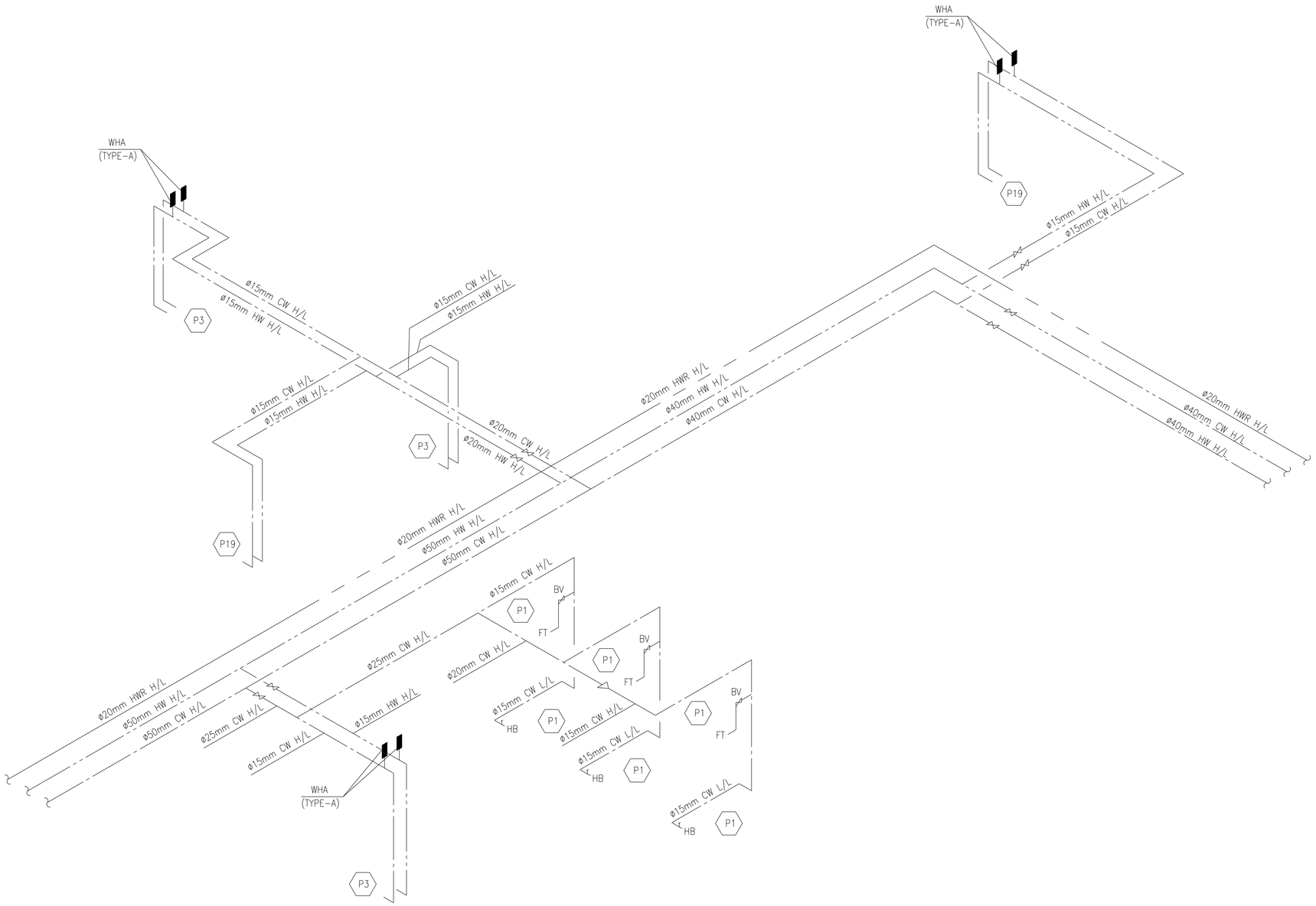

1 CW & HW RISER DIAGRAM

CL-P-10

SCALE: N.T.S

NOTE:

1. FOR PLUMBING LEGEND, ABBREVIATIONS, NOTES, SCHEDULES, AND STANDARD DETAILS SEE SHEETS CO-P-01 THRU CO-P-07.

DRAWING NOT TO SCALE

SYMBOL	DESCRIPTION	DATE	APR

DESIGNED BY: HAMAX E.
DWN BY: HAMAX M.
CHK BY: G. TAWAB
DATE: 06-27-07
SUBMITTED BY: R. GREWAL, CHIEF, PDT BLDG SYSTEMS
FILE NO.: AF0707CL-P-10

US Army Corps of Engineers
Transatlantic Programs Center

ANA REGIONAL BRIGADE
PAKTIKA, AFGHANISTAN
MEDICAL CLINIC
CW & HW RISER DIAGRAM

SHEET REFERENCE NUMBER:
DD
CL-P-10

$(getvar, "dwgprefix")$(getvar, "dwgname")$(edtime, 0, MON DD"", YYYY - H:MMam/pm)

MEDICAL CLINIC
PANEL PP

AIC: 25KA | FEED: BOTTOM

700AF/800AT MCB | MOUNTING: SURFACE

MLO | LOCATION: RM 158

VOLTAGE 380/220V, 3PH, 5W, 50HZ

DESCRIPTION	LOAD (VA) A	LOAD (VA) B	LOAD (VA) C	AMP	POLE	CKT	A	B	C	CKT	POLE	AMP	LOAD (VA) A	LOAD (VA) B	LOAD (VA) C	DESCRIPTION
EF-CL-01	125			20	1	1				2			16000			
EF-CL-02		125		20	1	3				4	3	100		14980		LP1
EF-CL-03			100	20	1	5				6					16640	
EF-CL-04	500			20	1	7				8			32755			
EF-CL-05		350		20	1	9				10	3	200		35568		PP1
EF-CL-06			100	20	1	11				12					32755	
	5000					13				14			55709			
EWH-CL-01		5000		30	3	15				16	3	300		55709		PP2
			5000			17				18					53709	
	5000					19				20	1	20				SPARE
EWH-CL-02		5000		30	3	21				22	1	20				SPARE
			5000			23				24	1	20			1400	RECEPTACLE RM#111,158,107,106
DENTAL CHAIR RECEPTACLE RM#129	2200			20	1	25				26			7000			
DENTAL CHAIR RECEPTACLE RM#129		2200		20	1	27				28	3	30		7000		X-RAY MACHINE
FOR FUTURE SELF DETECTORS			1600	20	1	29				30					7000	
FOR FUTURE SELF DETECTORS	1600			20	1	31				32	1	20				SPARE
SPARE				20	1	33				34	1	20				SPARE
FOR FUTURE SELF DETECTORS			1600	20	1	35				36	1	20			1400	FOR FUTURE SELF DETECTORS
SPACE						37				38			21127.2			
SPACE						39				40	3	125		13966		LP-2
SPACE						41				42					20888	
SUB-TOTALS=	14425	12675	13400										132591.2	127223	133792	= SUB-TOTALS

	V A	AMPS
TOTAL PHASE A=	147016.2	668.25
TOTAL PHASE B=	139898	635.9
TOTAL PHASE C=	147192	669.05
TOTAL CONNECTED LOAD	434.106	KVA
DEMANDED FACTOR	0.82	
DEMANDED LOAD	355.967	KVA
20% FUTURE LOAD	71.19	KVA
TOTAL LOAD	427.16	KVA
TOTAL AMPERE	649.77	AMP

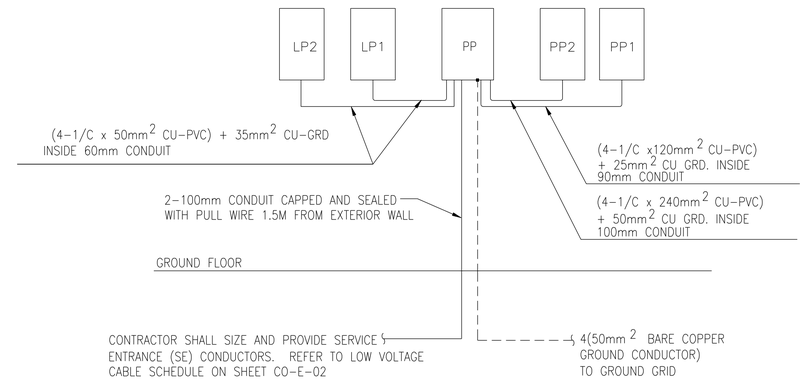

2 POWER RISER DIAGRAM
CL-E-01 SCALE: N.T.S.

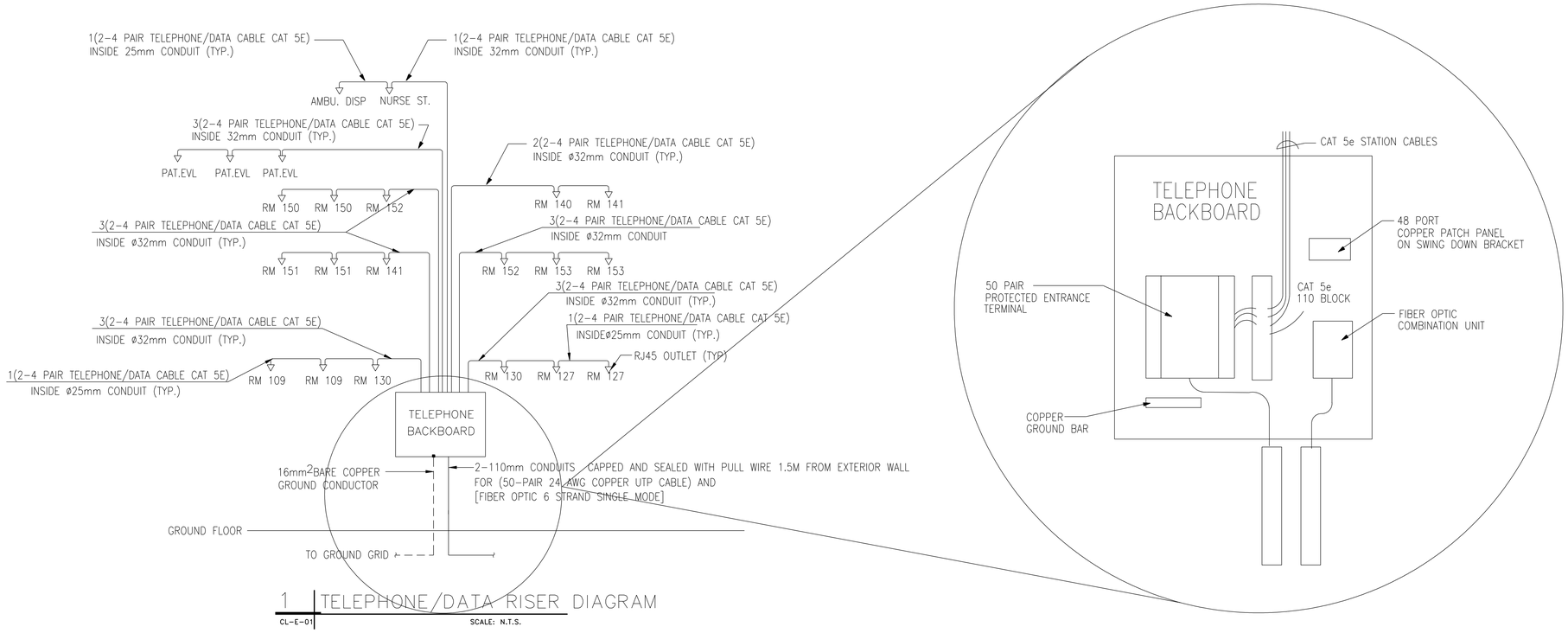

1 TELEPHONE/DATA RISER DIAGRAM
CL-E-01 SCALE: N.T.S.

NOTES:

1. SEE SHEET CO-E-01 FOR SYMBOLS, ABBREVIATIONS AND GENERAL NOTES.
2. SEE SHEET CO-E-02 FOR BRANCH CIRCUIT WIRE SCHEDULE.

DRAWING NOT TO SCALE

SYMBOL	DESCRIPTION	DATE	APR

DESIGNED BY: XXX | DATE: 06-27-07
DWN BY: XXX | SUBMITTED BY: RALYI GREWAL RAYE PETT BLDG SYSTEMS
CHK BY: XXX | FILE NO.: AF0707CL-E-01

US Army Corps of Engineers Transatlantic Programs Center

ANA REGIONAL BRIGADE
PAKTIKA, AFGHANISTAN
MEDICAL CLINIC
PANEL SCHEDULES AND RISER DIAGRAMS

SHEET REFERENCE NUMBER:
DD
CL-E-01

$(getvar, "dwgprefix")$(getvar, "dwgname")$(edtime, 0, MON DD",", YYYY - HHMMam/pm)

MEDICAL CLINIC PANEL LP1

AIC: 25KA

MCB 100A MLO

VOLTAGE 380/220V, 3PH, 5W, 50HZ

FEED BOTTOM

MOUNTING FLUSH

LOCATION RM 158

DESCRIPTION	LOAD (VA) A	B	C	AMP	POLE	CKT	A	B	C	CKT	POLE	AMP	LOAD (VA) A	B	C	DESCRIPTION
LIGHTING RM# 120	1400			20	1	1				2	1	20	1200			LIGHTING RM# 146,148,150,152,154,156
LIGHTING RM# 125,123		1600		20	1	3				4	1	20		800		LIGHTING RM# 112
LIGHTING RM# 111			1220	20	1	5				6	1	20			1200	LIGHTING RM# 147,149,151,153,155,157
RECEPTACLE RM# 157,155,153	1400			20	1	7				8	1	20	800			LIGHTING RM# 109,110
LIGHTING RM# 102		1040		20	1	9				10	1	20		1200		LIGHTING RM# 139,140,141,142,143,144,145
LIGHTING RM# 121			800	20	1	11				12	1	20			600	LIGHTING RM# 137
RECEPTACLE RM# 120	1600			20	1	13				14	1	20	1400			LIGHTING RM# 132,127,138,126
LIGHTING RM# 129,130,131		1000		20	1	15				16	1	20		720		LIGHTING RM# 136,139
RECEP RM# 145,143,141			1400	20	1	17				18	1	20			1400	LIGHTING RM# 134,135,133
LIGHTING RM# 104,106,103	1000			20	1	19				20	1	20	1000			RECEPTACLE RM# 135,129
LIGHTING RM# 158,108,105		1220		20	1	21				22	1	20		1200		RECEPTACLE RM# 130,131,103
LIGHTING RM# 115,114,117,119			1020	20	1	23				24	1	20			1200	RECEPTACLE RM# 103,104,106
RECEPTACLE RM# 151,149,147,145	1800			20	1	25				26	1	20	1600			RECEPTACLE RM# 102,109,110
RECEPTACLE RM# 156,154,152		1600		20	1	27				28	1	20		1200		RECEPTACLE RM# 115,117,119,121
RECEPTACLE RM# 150,148,146,144			1800	20	1	29				30	1	20			1400	RECEPTACLE RM# 121,123
RECEPTACLE RM# 144,142,140	1400			20	1	31				32	1	20	1400			RECEPTACLE RM# 111,112,116,118
RECEPTACLE RM#139,132,127,138,102		1800		20	1	33				34	1	20		1600		RECEPTACLE RM# 120
RECEPTACLE RM# 137,133,134			1400	20	1	35				36	1	20			1600	RECEPTACLE RM# 120
SPARE				20	1	37				38	1	20				SPARE
SPARE				20	1	39				40	1	20				SPARE
SPARE				20	1	41				42	1	20			1600	RECEPTACLE RM# 123,125
SUB-TOTALS=	8600	8260	7640										7400	6720	9000	= SUB-TOTALS

	V A	AMPS
TOTAL PHASE A=	16000	72.72
TOTAL PHASE B=	14980	68.09
TOTAL PHASE C=	16640	75.636
TOTAL CONNECTED LOAD	47.62	KVA
DEMANDED FACTOR	0.84	
DEMANDED LOAD	40	KVA
20% FUTURE LOAD	8	KVA
TOTAL LOAD	48	KVA
TOTAL AMPERE	72.92	AMP

MEDICAL CLINIC PANEL PP1

AIC: 25KA

MCB 200 MLO

VOLTAGE 380/220V, 3PH, 5W, 50HZ

FEED BOTTOM

MOUNTING FLUSH

LOCATION RM 158

DESCRIPTION	LOAD (VA) A	B	C	AMP	POLE	CKT	A	B	C	CKT	POLE	AMP	LOAD (VA) A	B	C	DESCRIPTION
CU-1, RM# 157	2813			20	1	1				2	1	20				SPARE
CU-1, RM# 155		2813		20	1	3				4	1	20		2813		CU-1, RM# 133
CU-1, RM# 153			2813	20	1	5				6	1	20			2813	CU-1, RM# 135
CU-1, RM# 151	2813			20	1	7				8	1	20	2813			CU-1, RM# 129
CU-1, RM# 149		2813		20	1	9				10	1	20		2813		CU-1, RM# 130
CU-1, RM# 147			2813	20	1	11				12	1	20			2813	CU-1, RM# 131
CU-1, RM# 145	2813			20	1	13				14	1	20	2813			CU-1, RM# 103
CU-1, RM# 143		2813		20	1	15				16	1	20		2813		CU-1, RM# 104
CU-1, RM# 141			2813	20	1	17				18	1	20			2813	CU-1, RM# 106
CU-1, RM# 156	2813			20	1	19				20	1	20	2813			CU-1, RM# 102
CU-1, RM# 154		2813		20	1	21				22	1	20		2813		CU-1, RM# 102
CU-1, RM# 152			2813	20	1	23				24	1	20			2813	CU-1, RM# 109
CU-1, RM# 150	2813			20	1	25				26	1	20	2813			CU-1, RM# 110
CU-1, RM# 148		2813		20	1	27				28	1	20		2813		CU-1, RM# 127
CU-1, RM# 146			2813	20	1	29				30	1	20			4625	CU-2, RM# 137
CU-1, RM# 144	2813			20	1	31				32	1	20	4625			CU-2, RM# 134
CU-1, RM# 142		2813		20	1	33				34	1	20		4625		CU-2, RM# 132
CU-1, RM# 140			2813	20	1	35				36	1	20				SPARE
SPARE				20	1	37				38	1	20				SPARE
SPARE				20	1	39				40	1	20				SPARE
SPARE				20	1	41				42	1	20				SPARE
SUB-TOTALS=	16878	16878	16878										15877	18690	15877	= SUB-TOTALS

	V A	AMPS
TOTAL PHASE A=	32755	148.89
TOTAL PHASE B=	35568	161.67
TOTAL PHASE C=	32755	148.89
TOTAL CONNECTED LOAD	101.1	KVA
DEMANDED FACTOR	0.8	
DEMANDED LOAD	80.86	KVA
20% FUTURE LOAD	16.2	KVA
TOTAL LOAD	97	KVA
TOTAL AMPERE	147.55	AMP

NOTES:

1. SEE SHEET CO-E-01 FOR SYMBOLS, ABBREVIATIONS AND GENERAL NOTES.
2. SEE SHEET CO-E-02 FOR BRANCH CIRCUIT WIRE SCHEDULE.

DRAWING NOT TO SCALE

SYMBOL	DESCRIPTION	DATE	APR

DESIGNED BY: XXX
DATE: 06-27-07
DWN BY: XXX
SUBMITTED BY: RAVI GREWAL CHIEF, DPW BLDG SYSTEMS
CHK BY: XXX
FILE NO.: AF0707CL-E-02

US Army Corps of Engineers Transatlantic Programs Center

ANA REGIONAL BRIGADE
PAKTIKA, AFGHANISTAN

MEDICAL CLINIC

PANEL SCHEDULES

SHEET REFERENCE NUMBER:
DD
CL-E-02

$(getvar, "dwgprefix")$(getvar, "dwgname")$(edtime, 0, MON DD"," YYYY - HHMMam/pm)

MEDICAL CLINIC
PANEL LP2

AIC: 25KA
125A MCB
MLO
VOLTAGE 380/220V, 3PH, 5W, 50HZ

FEED BOTTOM
MOUNTING FLUSH
LOCATION RM 158

DESCRIPTION	LOAD (VA) A	B	C	AMP	POLE	CKT	A B C	CKT	POLE	AMP	LOAD (VA) A	B	C	DESCRIPTION
LTG RM # 159,160,161,162,163,164				20	1	1		2			10340			
SPARE				20	1	3		4	3	100		10340		PACU-04
CU-1 RM 159			2813	20	1	5		6					10340	
CU-1 RM 160	2813			20	1	7		8	1	20	310.2			EF-CL-07
CU-1 RM 161		2813		20	1	9		10	1	20		93		EF-CL-08
CU-1 RM 164			2813	20	1	11		12	1	20			900	RECEPTACLE RM 159
RECEPTACLE RM 161	540			20	1	13		14	1	20	720			RECEPTACLE RM 162
RECEPTACLE RM 160		540		20	1	15		16	1	20		720		RECEPTACLE RM 164
CU-2 RM 162			4625	20	1	17		18	1	20			117	RP-CL-01 RM 108
CU-2 RM 162	4625			20	1	19		20	1	20	117			RP-CL-02 RM 108
TTC RECP		180		20	1	21		22	1	20				SPARE
TTC RECP			180	20	1	23		24	1	20				
SPARE				20	1	25		26						
SPARE				20	1	27		28	3	20				SPARE
SPACE				20	1	29		30						
SPACE						31		32						
SPACE						33		34	3	20				SPARE
SPACE						35		36						
SPACE						37		38						SPACE
SPACE						39		40						SPACE
SPACE						41		42						SPACE
SUB-TOTALS=	10360	3533	10431								10767.2	10433	10457	= SUB-TOTALS

	V A	AMPS
TOTAL PHASE A=	21127.2	96.03
TOTAL PHASE B=	13966	63.48
TOTAL PHASE C=	20888	94.95
TOTAL CONNECTED LOAD	55.98	KVA
DEMANDED FACTOR	0.84	
DEMANDED FACTOR LOAD	47.02	KVA
20% FUTURE LOAD	9.4	KVA
TOTAL LOAD	56.42	KVA
TOTAL AMPERE	85.83	AMP

MEDICAL CLINIC
PANEL PP2

AIC: 25KA
300A MCB
MLO
VOLTAGE 380/220V, 3PH, 5W, 50HZ

FEED BOTTOM
MOUNTING FLUSH
LOCATION RM 158

DESCRIPTION	LOAD (VA) A	B	C	AMP	POLE	CKT	A B C	CKT	POLE	AMP	LOAD (VA) A	B	C	DESCRIPTION
UH-CL-01, RM 139	2000			20	1	1		2			14500			
UH-CL-01, RM 107		2000		20	1	3		4	3	100		14500		PACU-01
UH-CL-01, RM 115			2000	20	1	5		6					14500	
UH-CL-01, RM 117	2000			20	1	7		8			8333			
UH-CL-01, RM 119		2000		20	1	9		10	3	50		8333		PACU-02
CU-2, RM 121			2500	20	1	11		12					8333	
CU-2, RM 125	4625			20	1	13		14			8333			
CU-2, RM 123		4625		20	1	15		16	3	50		8333		PACU-03
CU-2, RM 120			4625	20	1	17		18					8333	
CU-2, RM 120	4625			20	1	19		20			1667			
CU-2, RM 120		4625		20	1	21		22	3	20		1667		UH-CL-03, RM 138
CU-2, RM 111			4625	20	1	23		24					1667	
CU-2, RM 111	4625			20	1	25		26			1667			
CU-2, RM 112		4625		20	1	27		28	3	20		1667		UH-CL-03, RM 108
			1667			29		30					1667	
UH-CL-03, RM 136	1667			20	3	31		32			1667			
		1667				33		34	3	20		1667		UH-CL-03, RM 114
SPARE				20	1	35		36					1667	
SPARE				20	1	37		38	1	20				SPARE
SPARE				20	1	39		40	1	20				SPARE
SPARE				20	1	41		42	1	20				SPARE
SUB-TOTALS=	19542	19542	17542								36167	36167	36167	= SUB-TOTALS

	V A	AMPS
TOTAL PHASE A=	55709	253.2
TOTAL PHASE B=	55709	253.2
TOTAL PHASE C=	55709	244.1
TOTAL CONNECTED LOAD	165.1	KVA
DEMANDED FACTOR	0.8	
DEMANDED FACTOR LOAD	132.1	KVA
20% FUTURE LOAD	26.4	KVA
TOTAL LOAD	158.5	KVA
TOTAL AMPERE	241.1	AMP

NOTES:

1. SEE SHEET CO-E-01 FOR SYMBOLS, ABBREVIATIONS AND GENERAL NOTES.
2. SEE SHEET CO-E-02 FOR BRANCH CIRCUIT WIRE SCHEDULE.

DRAWING NOT TO SCALE

SYMBOL	DESCRIPTION	DATE	APR

DESIGNED BY: XXX
DATE: 06-27-07
DWN BY: XXX
SUBMITTED BY: RAVI GREWAL CHIEF, DPT BLDG SYSTEMS
CHK BY: XXX
FILE NO.: AF0707CL-E-03

US Army Corps of Engineers Transatlantic Programs Center

ANA REGIONAL BRIGADE
PAKTIKA, AFGHANISTAN

MEDICAL CLINIC
PANEL SCHEDULE

SHEET REFERENCE NUMBER:
DD
CL-E-03

$(getvar, "dwgprefix")$(getvar, "dwgname")$(edtime, O, MON DD"," YYYY - H:MMam/pm)

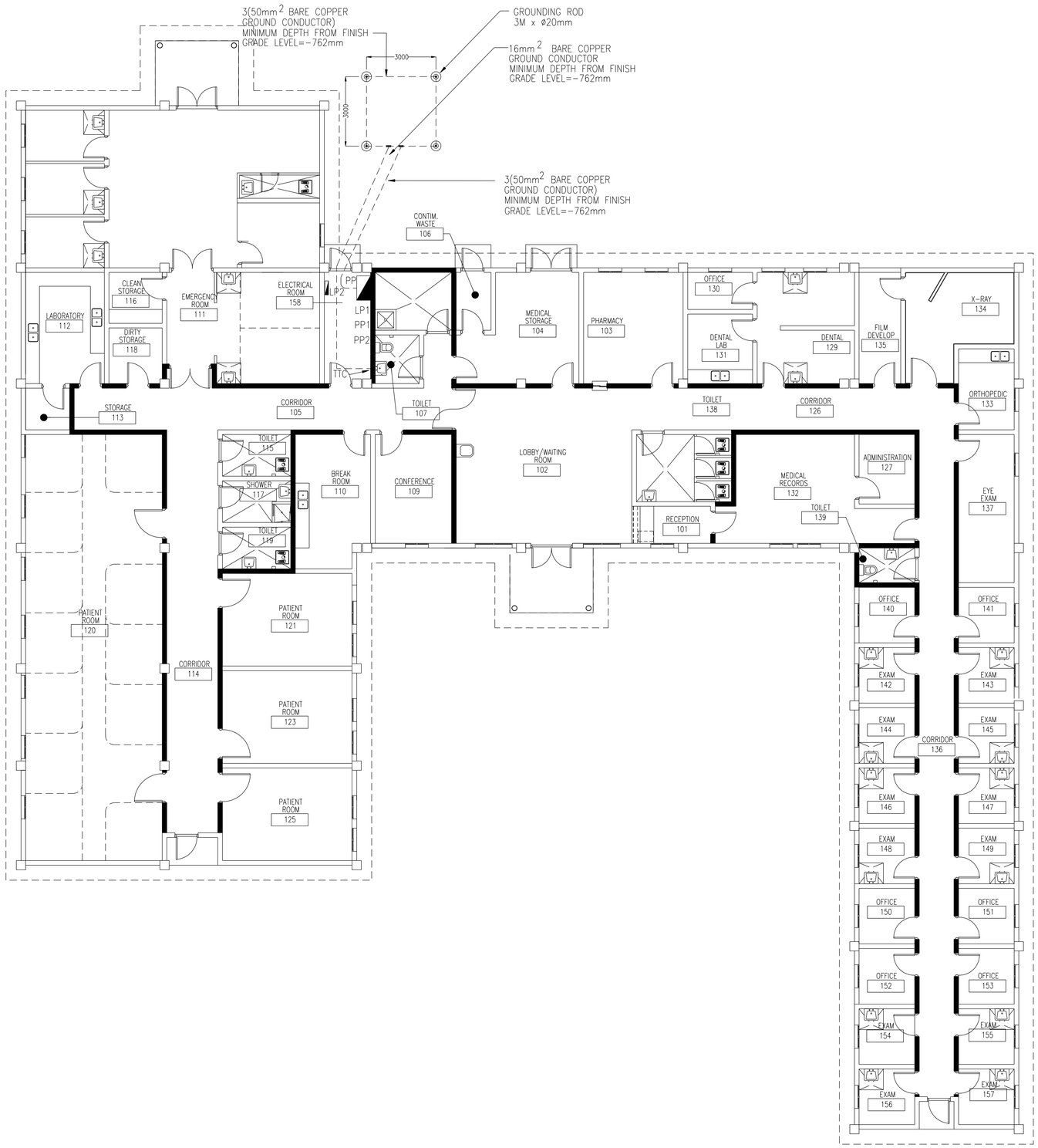

1 GROUNDING PLAN

CL-E-04 SCALE: 1:100

NOTES:

1. SEE SHEET CO-E-01 FOR SYMBOLS, ABBREVIATIONS AND GENERAL NOTES.
2. SEE SHEETS CO-E-03 TO CO-E-05 FOR STANDARD DETAILS.

1:100 1 0 1 2 3 4 5 6 7 8 9 DRAWING NOT TO SCALE

SYMBOL	DESCRIPTION	DATE	APR

DESIGNED BY: XXX
DWN BY: XXX
CHK BY: XXX
DATE: 06-27-07
SUBMITTED BY: RAYN GREWAL CHIEF, BLDG SYSTEMS
FILE NO.: AF0707CL-E-04

US Army Corps of Engineers Transatlantic Programs Center

ANA REGIONAL BRIGADE
PAKTIKA, AFGHANISTAN

MEDICAL CLINIC

GROUNDING PLAN

SHEET REFERENCE NUMBER:
DD
CL-E-04

$(getvar, "dwgprefix")$(getvar, "dwgname")$(edtime, 0, MON DD"", YYYY - H:MMam/pm)

NOTES:

1. MECHANICAL AND/OR FIRE PROTECTION DESIGNS FOR THIS AREA SHALL BE DESIGN-BUILD. CONTRACTOR SHALL REFER TO RESPECTIVE SECTIONS (01015) FOR REQUIREMENTS. EXISTING MECHANICAL AND FIRE PROTECTION EQUIPMENT IN THIS AREA (NEW ADDITION TO THE ORIGINAL FLOOR PLAN) SHALL BE REARRANGED, AS NECESSARY, TO FIT THE NEW FLOOR PLAN.

2. CONTRACTOR SHALL PROVIDE AND INSTALL A NEW PANELBOARD 'LP2' IN ELECTRIC ROOM (158) TO SERVICE NEW ELECTRICAL AND MECHANICAL LOADS IN THE NEW ADDITION. PANEL 'LP2' SHALL BE SIMILAR TO PANEL 'LP1'.

3. EXISTING MECHANICAL AND FIRE PROTECTION EQUIPMENT WHICH WILL BE REARRANGED AND / OR RELOCATED SHALL BE SERVICED FROM THE ORIGINAL ELECTRIC PANELS, AS DESIGNED. ALL NEW EQUIPMENT SHALL BE SERVICE FROM NEW PANEL 'LP2'. NEW FIRE DETECTION DEVICES SHALL BE CONNECTED TO THE ORIGINAL CIRCUITRY, EXTENI TO SERVICE THE NEW ADDITION.

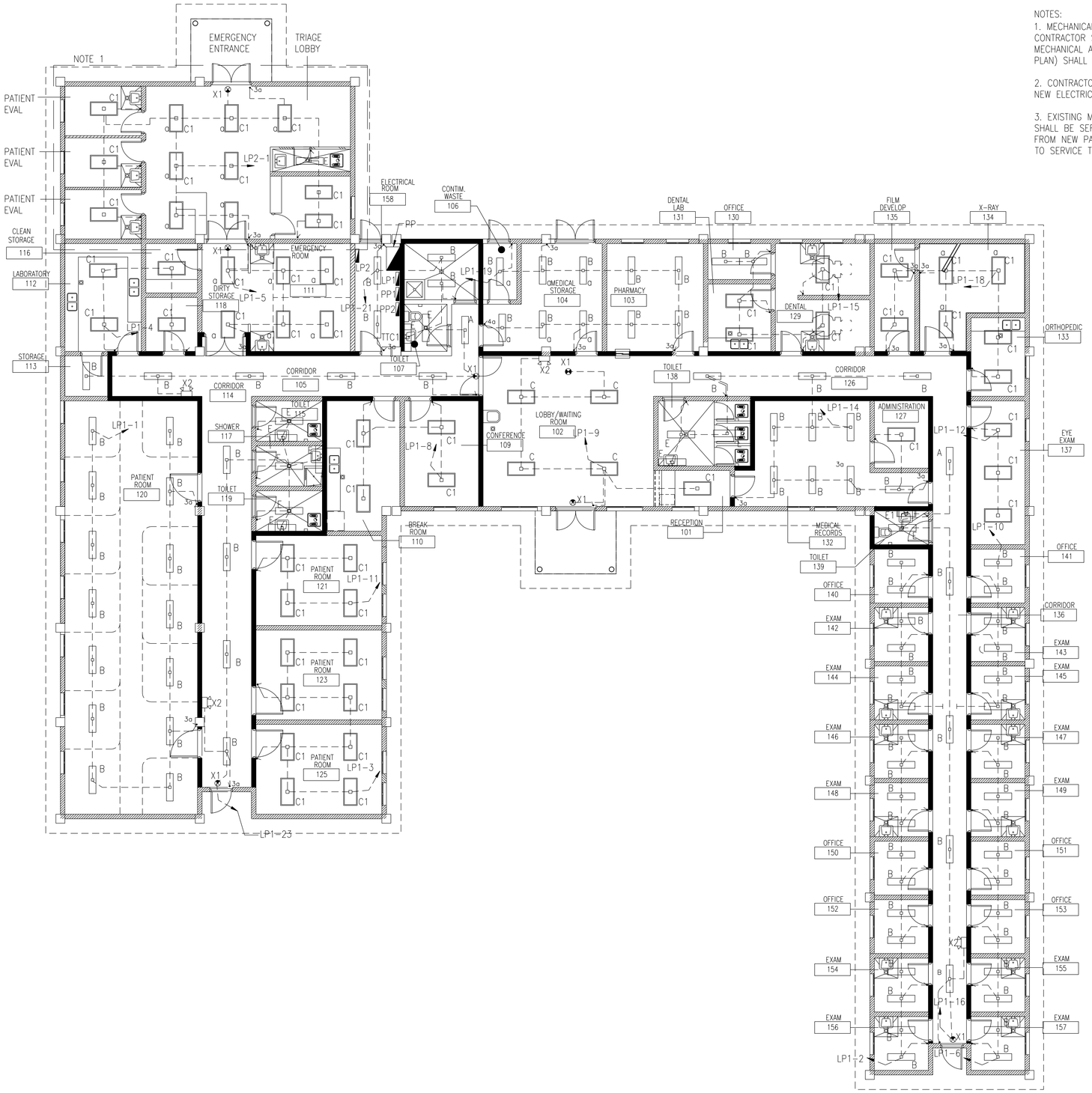

1 LIGHTING PLAN

CL-E-05 SCALE: 1:100

NOTES:

1. SEE SHEET CO-E-01 AND CO-E-02 FOR SYMBOLS, ABBREVIATIONS AND GENERAL NOTES. AND LIGHTING FIXTURE
2. SEE SHEETS CO-E-03 TO CO-E-05 FOR STANDARD DETAILS.
3. SEE SHEET CL-E-01 TO CL-E-03 FOR PANEL SCHEDULES.

N

1 0 1 2 3 4 5 6 7 8 9

1:100 DRAWING NOT TO SCALE

SYMBOL	DESCRIPTION	DATE	APR

DESIGNED BY: XXX
DWN BY: XXX
CHK BY: XXX
DATE: 06-27-07
SUBMITTED BY: RAVI DREWAL CHIEF, PDT BLDG SYSTEMS
FILE NO.: AF070CL-E-05

US Army Corps of Engineers Transatlantic Programs Center

ANA REGIONAL BRIGADE
PAKTIKA, AFGHANISTAN

MEDICAL CLINIC

LIGHTING PLAN

SHEET REFERENCE NUMBER:
DD
CL-E-05

$(getvar, "dwgprefix")$(getvar, "dwgname")$(edtime, O, MON DD", YYYY - HHMMam/pm)

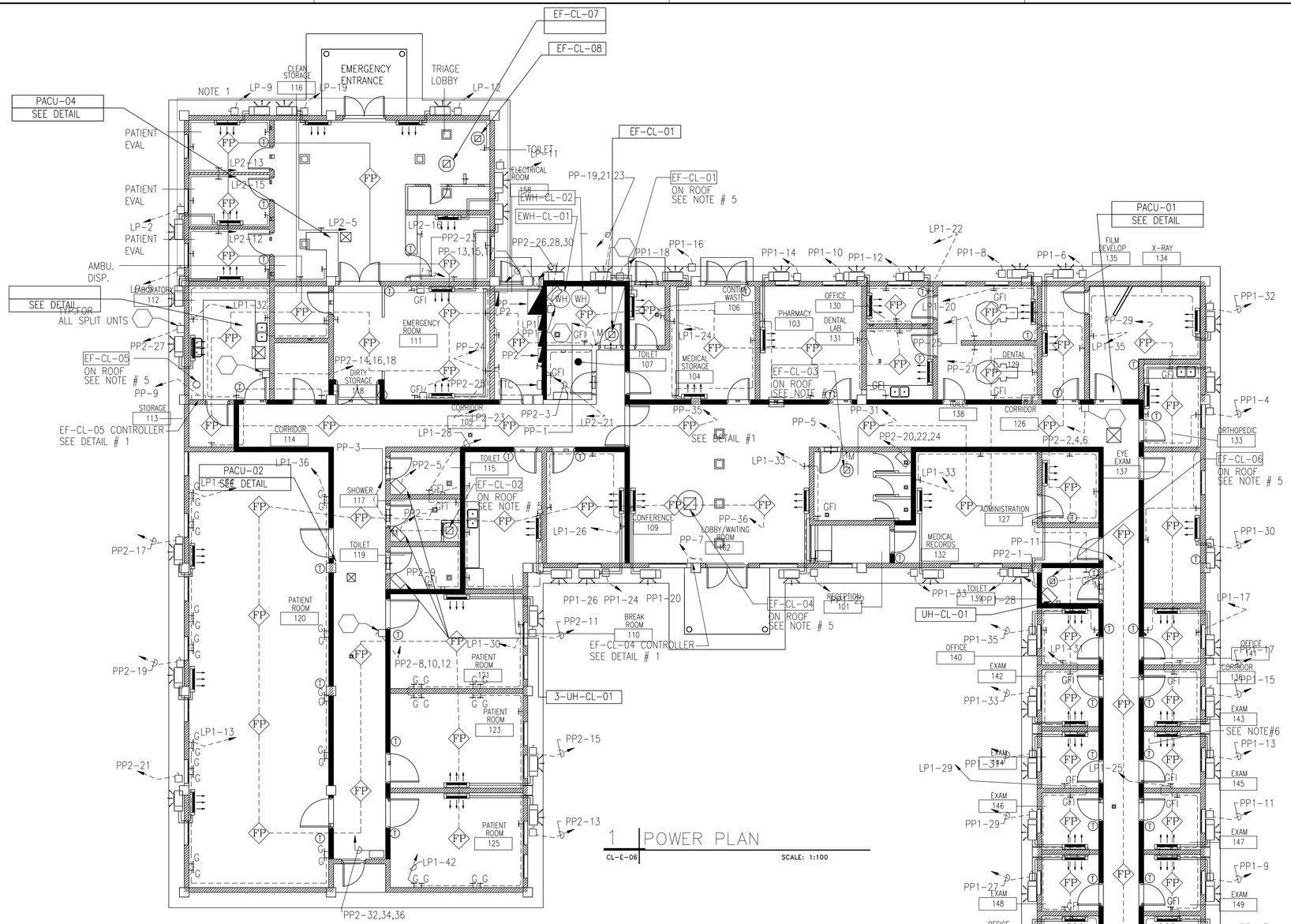

1 POWER PLAN

CL-E-06 SCALE: 1:100

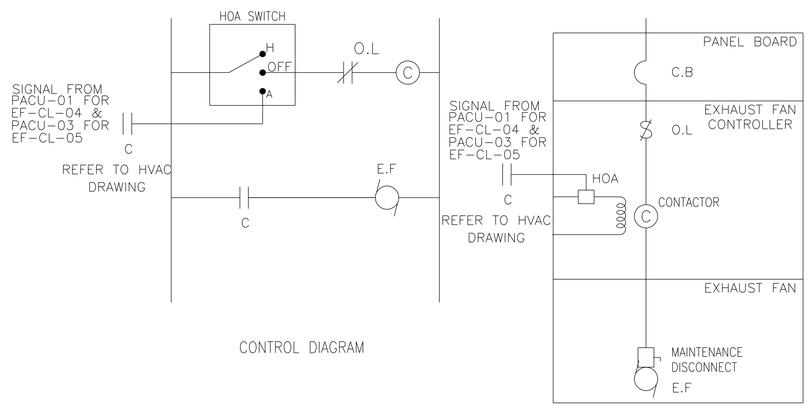

2 EXHAUST FANS # 4,5 CONTROLLER SCHEMATIC DIAGRAM DETAIL#1

CL-E-06 SCALE: N.T.S

KEY NOTES:

1. PROVIDE 20A/2P/240V NON-FUSED DISCONNECT SWITCH NEMA 3R ENCLOSURE.
2. PROVIDE 30A/3P/380V NON FUSED DISCONNECT SWITCH IN NEMA 1 ENCLOSURE.
3. PROVIDE 50A/3P/280V NON FUSED DISCONNECT SWITCH IN NEMA 1 ENCLOSURE.
4. PROVIDE 100A/3P/280V NON FUSED DISCONNECT SWITCH IN NEMA 1 ENCLOSURE.

NOTES:

1. SEE SHEET CO-E-01 FOR SYMBOLS, ABBREVIATIONS AND GENERAL NOTES.
2. SEE SHEETS CO-E-03 TO CO-E-05 FOR STANDARD DETAILS.
3. SEE SHEET CL-E-01 TO CL-E-03 FOR PANEL SCHEDULES AND RISER DIAGRAMS FOR POWER, TELEPHONE AND DATA SYSTEMS.
4. PROVIDE FIRE ALARM PULL BOXES CONDUITS AND WIRING FOR FUTURE SELF SMOKE DETECTOR,
5. THE EXHAUST FAN SHALL BE EQUIPED WITH DISCONNECT SWITCH FOR MAINTENANCE
6. ø3/4" PVC CONDUIT FOR CONTROL WIRE TYP. FOR ALL SPLIT UNITS

N

1:100 DRAWING NOT TO SCALE

SYMBOL	DESCRIPTION	DATE	APR

DESIGNED BY: XXX
DATE: 06-27-07
DWN BY: XXX
SUBMITTED BY: RAVI PREWAL CHIEF PDT BLDG SYSTEMS
CHK BY: XXX
FILE NO.: AF0707CL-E-06

US Army Corps of Engineers Transatlantic Programs Center

ANA REGIONAL BRIGADE
PAKTIKA, AFGHANISTAN

MEDICAL CLINIC

POWER PLAN

SHEET REFERENCE NUMBER:
DD
CL-E-06

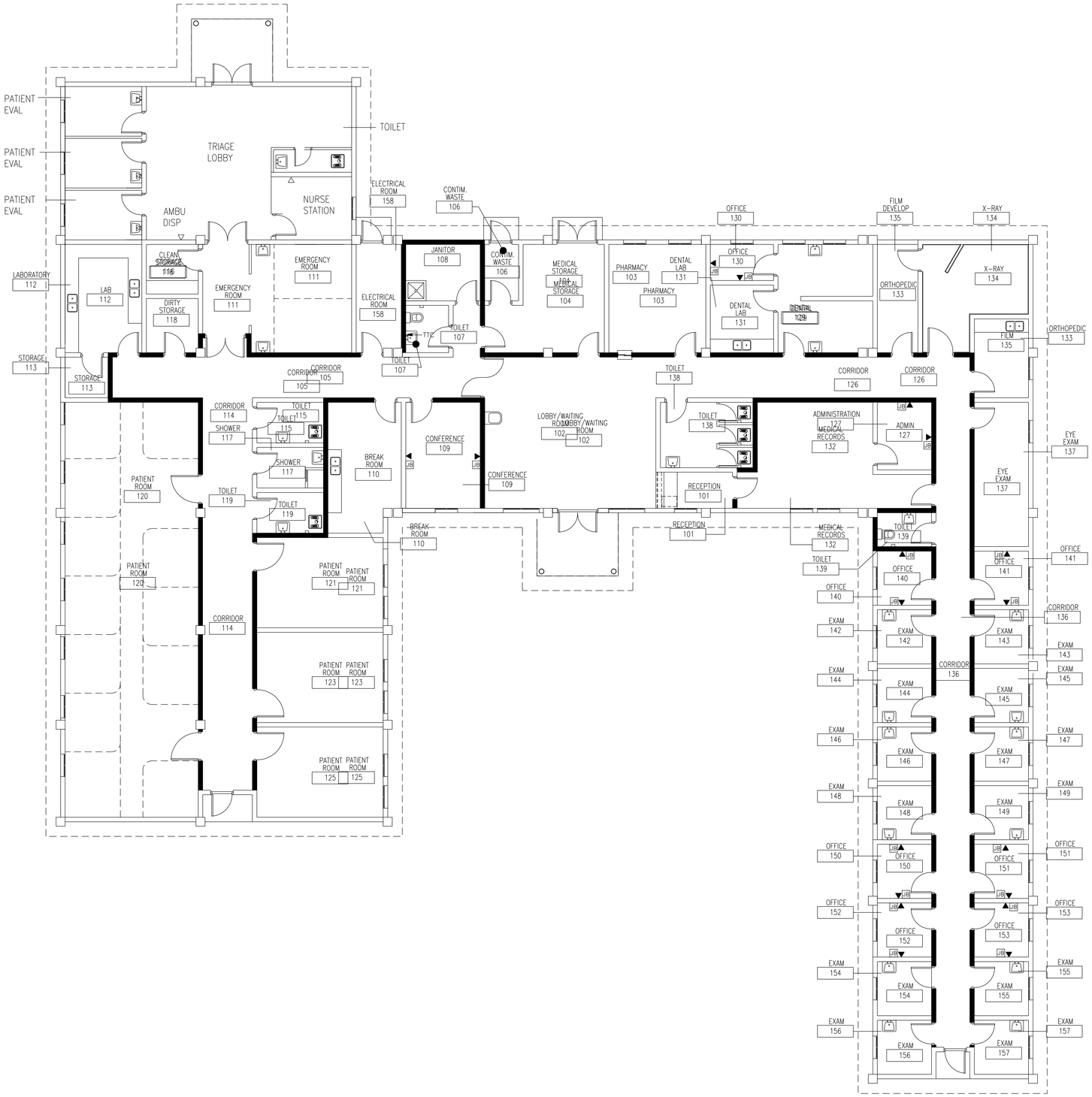

1 COMMUNICATION PLAN

CL-E-07 SCALE: 1:100

NOTES:

1. SEE SHEET CO-E-01 FOR SYMBOLS, ABBREVIATIONS AND GENERAL NOTES.
2. SEE SHEETS CO-E-03 TO CO-E-05 FOR STANDARD DETAILS.
3. SEE SHEET CL-E-01 FOR PANEL SCHEDULES AND RISER DIAGRAMS FOR POWER, TELEPHONE AND DATA SYSTEMS.

1 0 1 2 3 4 5 6 7 8 9
1:100 DRAWING NOT TO SCALE

SYMBOL	DESCRIPTION	DATE	APR

DESIGNED BY: XXX
DATE: 06-27-07
DWN BY: XXX
SUBMITTED BY: RAVI PREWAL CHIEF PT. BLDG SYSTEMS
CHK BY: XXX
FILE NO.: AF0707CL-E-07

US Army Corps of Engineers Transatlantic Programs Center

ANA REGIONAL BRIGADE
PAKTIKA, AFGHANISTAN
MEDICAL CLINIC
COMMUNICATION PLAN

SHEET REFERENCE NUMBER:
DD
CL-E-07

$(getvar, "dwgprefix")$(getvar, "dwgname")$(edtime, O, MON DD"," YYYY - HH:MMam/pm)

ARCHITECTURAL ABBREVIATIONS

A	
ABOVE FINISH FLOOR	AFF
ACCESS PANEL	AP
ACOUSTIC	ACOUS (ACST)
ACTIVE LEAF	A/L
AGGREGATE	AGG
AIR CONDITIONING	A/C
ALUMINUM	ALUM (AL)
ANCHOR BOLT	AB
AND	&
ANGLE	∠ (ANG)
ARCHITECTURAL	ARCH
AREA INLET	A.I.
ASPHALT	ASPH
AT	@
AUTOMATIC	AUTO
B	
BACK OF WALL	BOW
BATTEN INSULATION	BATT INSUL
BEAM	BM
BEARING	BRG
BITUMINOUS	BIT (BITUM)
BLOCK	BLK
BLOCKING	BLKG
BOARD	BD
BOTTOM	BOT (BOTT)
BRACING	BRCG
BRACKET	BRKT
BUILDING	BLDG
C	
CABINET	CAB
CAST IRON	CI
CATCH BASIN	CB
CEILING	CLG
CEMENT	CEM
CENTER	CTR
CENTER LINE	℄ OR CL
CENTER TO CENTER	CC
CERAMIC TILE	CT
CIRCULAR	CIR
CLEANOUT	CO
CLEAR	CLR
CLOSET	CLO
COLUMN	COL
CONCRETE	CONC
CONCRETE MASONRY UNITS	CMU
CONNECTION	CONN
CONSTRUCTION	CONSTR
CONSTRUCTION JOINT	CONSTR JT
CONTINUOUS	CONT.
CONTROL JOINT	CJ
CORNER	COR
CORRIDOR	CORR
COUNTER	CNTR
COUNTER SUNK	CSK
D	
DAMPPROOFING	DP
DETAIL	DET (DETL)
DIAGONAL	DIAG
DIAMETER	DIA
DIMENSION	DIM
DISPENSER	DISP
DOOR	DR
DOUBLE	DBL
DOWN	DN
DRAWER	DWR
DRAWING	DWG
DRINKING FOUNTAIN	DF
E	
EACH	EA
ELECTRICAL OR ELECTRIC	ELEC
ELEVATION	EL.
EMERGENCY	EMERG
ENCLOSURE	ENCL
ENTRANCE	ENTR
EQUIPMENT	EQUIP (EQPT)
EQUAL	EQ
EXHAUST	EXH
EXISTING	EXIST.
EXPANSION	EXPN
EXPANSION JOINT	EJ (EXP JT)
EXTERIOR	EXT
F	
FACE OF CONCRETE	FOC
FACE OF FINISH	FOF
FACE OF MASONRY	FOM
FACE OF WALL	FOW
FINISH	FIN.
FIRE HYDRANT	FH
FIXTURE	FIX
FLASHING	FLASH
FLOOR	FLR OR FL
FLOOR DRAIN	FD
FLOORING	FLG
FOOTING	FTG
FOUNDATION	FDN
FRAME	FR
FINISH FLOOR LINE	FFL
G	
GAGE OR GAUGE	GA
GALVANIZED	GALV
GALVANIZED IRON	GI
GAS	G
GRID LINE	GL
GLAZED WALL TILE	GWT
GRADE	GR
GROUND	GND
GROUND CLEANOUT	GCO
GYPSUM	GYP
GYPSUM WALLBOARD	GYP BD (GWB)
H	
HANDRAIL	HDR
HARDBOARD	HBD
HARDWARE	HDW (HW)
HEAD	HD
HEATER	HTR
HEIGHT	HT (HGT)
HIGH POINT	H.PT.
HOLLOW METAL	HM
HORIZONTAL	HORIZ
HOSE BIBB	HB
I	
INSIDE DIAMETER	I.D.
INSULATION	INSUL.
INTERIOR	INT (INTR)
J	
JANITOR	JAN
JOINT	JT
JOIST	JST
K	
KEY LOCK	KL
KICK PLATE	KP
L	
LABORATORY	LAB
LAMINATE	LAM
LAVATORY	LAV
LIGHT	LT
LIGHTING	LTG
LOW POINT	LP
LUMBER	LBR
LOUVER	LVR
M	
MACHINE	MACH
MAINTENANCE	MAINT
MASONRY OPENING	MO
MASONRY UNIT	MU
MASTIC	MSTC
MATERIAL	MATL
MAXIMUM	MAX
MECHANICAL	MECH
METAL	MET
METAL BUILDING MANUFACTURER	MBM
MINIMUM	MIN
MIRROR	MIR
MISCELLANEOUS	MISC
MONOLITHIC	MONO
N	
NORTH	N
NOT IN CONTRACT	NIC
NUMBER	NO. (#)
NOT TO SCALE	NTS
O	
OFFICE	OFF.
ON CENTER	OC
OPENING	OPNG
OPPOSITE	OPP
OUTSIDE DIAMETER	O.D.
P	
PANEL	PNL
PAPER TOWEL DISPENSER	PTD
PAPER TOWEL DISPENSER & RECEPTACLE	PTD/R
PAPER TOWEL RECEPTACLE	PTR
PARTITION	PRTN
PLASTER	PLAST
PLATE	PL OR P
PLUMBING	PLBG
PLYWOOD	PLY WD
PRECAST	PRCST
Q	
QUARRY TILE	Q.T.
QUARTERS	QTRS
R	
RADIUS	RAD
RECEPTACLE	RECP
REFERENCE	REF
REFRIGERATOR	REFR
REINFORCEMENT	REINF
REQUIRED	REQD
REVISIONS	REV
RISER	R
ROOFING	RFG
ROOM	RM
ROUGH	RGH
S	
SANITARY NAPKIN DISPENSER	SND
SANITARY NAPKIN RECEPTACLE	SNR
SCHEDULE	SCH
SEAT COVER DISPENSER	SCD
SERVICE SINK	SSK
SHEATHING	SHTHG
SHEET	SHT.
SHEET METAL	SHT. MET.
SHOWER	SHR
SIMILAR	SIM
SOAP DISPENSER	SD
SOLID CORE	SC
SOUTH	S
SPEAKER	SPKR
SPECIFICATION	SPEC
SPLASH BLOCK	SB
SQUARE	SQ OR ◻
STANDARD	STD
STEEL	STL
STORAGE	STOR
STRUCTURAL	STRL
SUSPENDED	SUSP
SYMMETRICAL	SYM
T	
TELEPHONE	TEL
TEMPERATURE	TEMP
TEMPERED GLASS	T
TERRAZZO	TER
THICK	THK
TOILET PAPER DISPENSER	TPD
TOP OF CONCRETE	TOC
TOP OF CURB	TC
TOP OF PAVEMENT	TP
TOP OF STEEL	TOS
TOP OF WALL	TW
TOPOGRAPHY	TOPO
TYPICAL	TYP
U	
UNLESS OTHERWISE NOTED	UON
URINAL	UR
V	
VENTILATOR	VENT
VENT THRU ROOF	VTR
VERTICAL	VERT
VESTIBULE	VEST
W	
WATER CLOSET	WC
WEIGHT	WT
WELDED WIRE FABRIC	WWF
WINDOW	W/
WITH	W/O
WITHOUT	WD
WOOD	

SYMBOLS

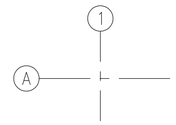

GRID LINES

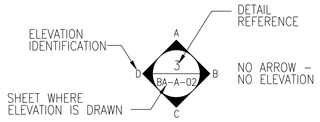

INTERIOR ELEVATION

DETAIL

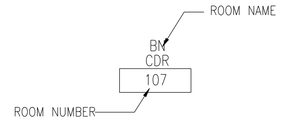

ROOM IDENTIFICATION

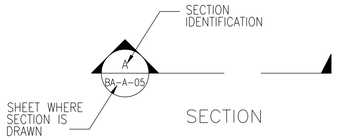

SECTION

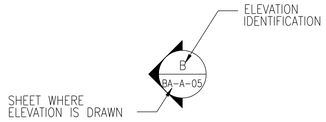

EXTERIOR ELEVATION

DOOR NUMBER

WINDOW NUMBER

LOUVER NUMBER

MATERIAL LEGEND

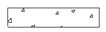

CONCRETE

CONCRETE MASONRY UNIT (CMU)

SAND, MORTAR

METAL STUD WALL

WOOD – FRAMING

WOOD BLOCKING

METAL

INSULATION, BATT

GYPSUM BOARD

WOOD – FINISH

RIGID INSULATION BOARD

DESIGNED BY: YSK	DATE: 04-11-07		
DWN BY: JSG	SUBMITTED BY: CHIEF, PM PROJECTS DEV		
CHK BY: PLD	FILE NO.: AF070700-A-01		

US Army Corps of Engineers Transatlantic Programs Center

SYMBOL	DESCRIPTION	DATE	APR

ANA REGIONAL BRIGADE
PAKTIKA, AFGHANISTAN

ARCH. ABBREVIATIONS, LEGENDS AND SYMBOLS

SHEET REFERENCE NUMBER:

CO–A–01

$(getvar, "dwgprefix")$(getvar, "dwgname")$(edtime, 0, MON DD"," YYYY – HHMMam/pm)

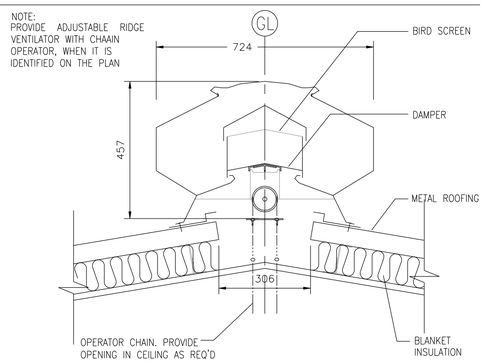

15 RIDGE VENTILATOR

CO-A-02 SCALE: 1:10

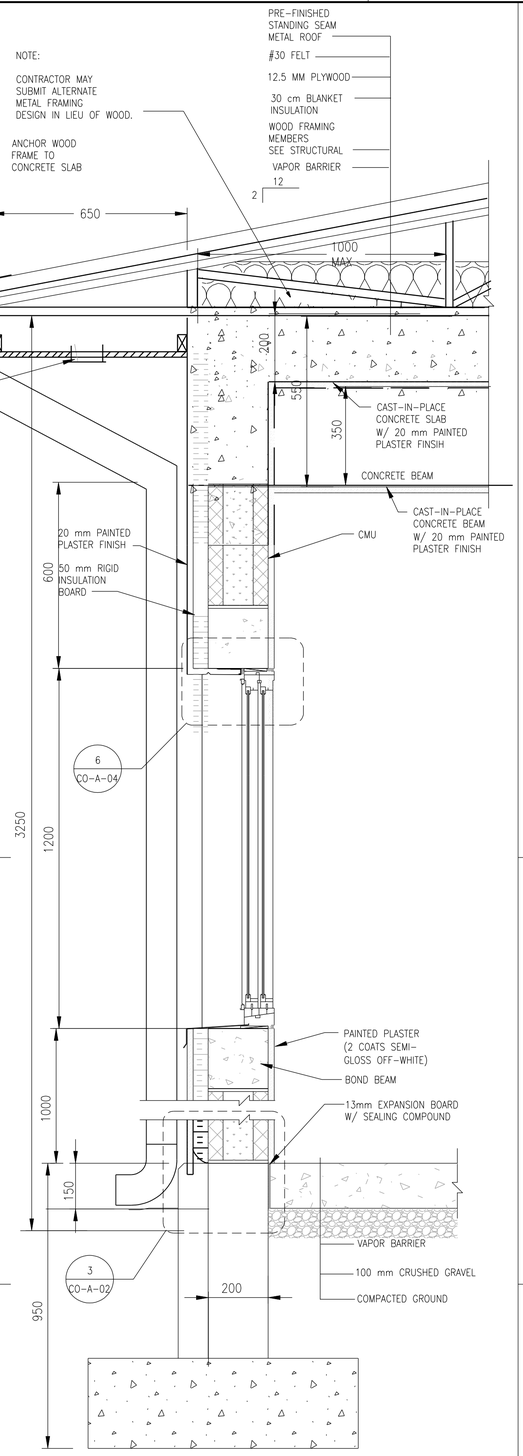

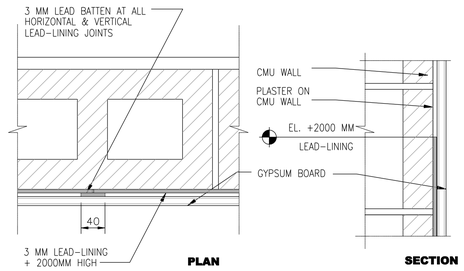

7 LEAD-LINED WALL

CO-A-02 SCALE: 1:5

6 NOT USED

CO-A-02 SCALE: 1:10

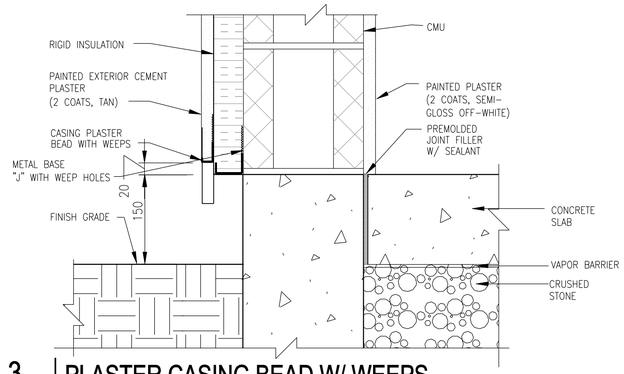

3 PLASTER CASING BEAD W/ WEEPS

CO-A-02 SCALE: 1:5

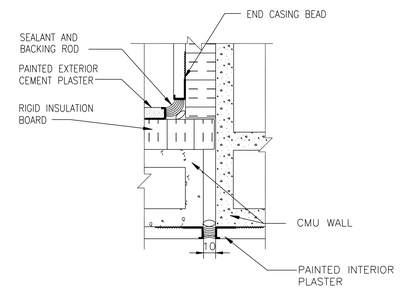

A PERPENDICULAR WALL TO WALL
PLAN

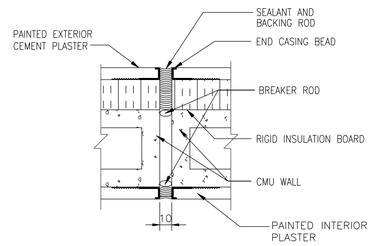

B ALIGNED WALL TO WALL
PLAN

2 CONTROL JOINT

CO-A-02 SCALE: 1:5

NOTE:
FOR WALL REINFORCEMENT SEE 5/CO-S-08

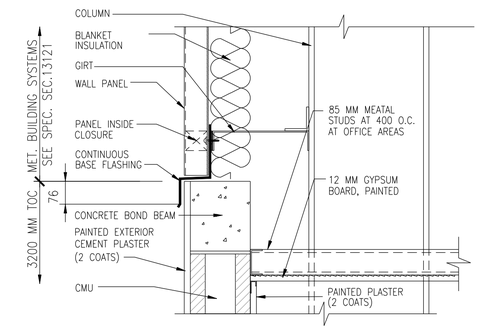

14 METAL PANEL FLASHING @ CMU WALL

CO-A-02 SCALE: 1:10

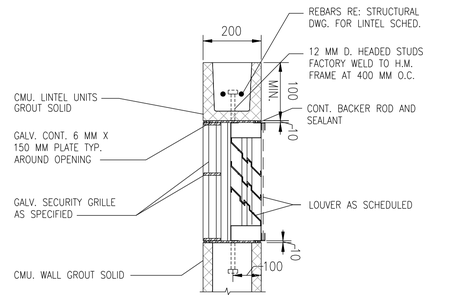

5 LOUVER HEAD/SILL DETAIL (JAMB SIM.)

CO-A-02 SCALE: 1:10

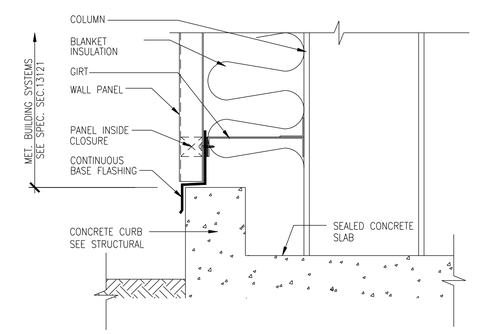

13 METAL PANEL FLASHING @ CURB

CO-A-02 SCALE: 1:10

9 TYPICAL WALL SECTION

CO-A-02 SCALE: 1:10

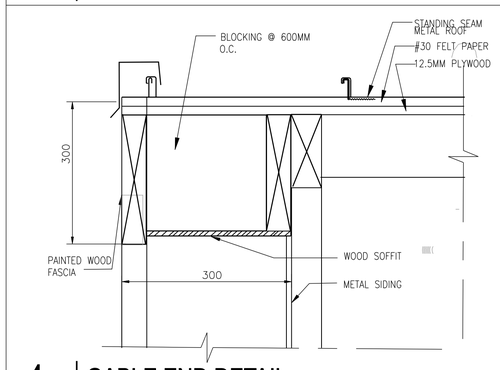

4 GABLE END DETAIL

CO-A-02 SCALE: 1:5

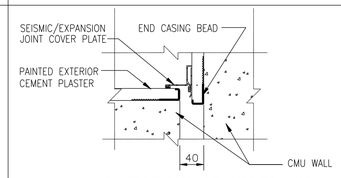

A PERPENDICULAR WALL TO WALL
PLAN

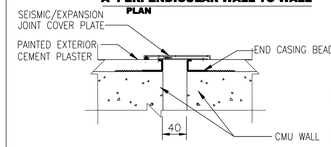

B ALIGNED WALL TO WALL
PLAN

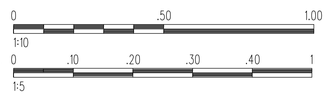

1 SEISMIC JOINT

CO-A-02 SCALE: 1:5

DRAWING NOT TO SCALE

SYMBOL	DESCRIPTION	DATE	APR

DESIGNED BY: YSK
DWN BY: JSG
CHK BY: PLD
DATE: 04-11-07
SUBMITTED BY: PHILIP J. DINELLO
CHIEF, PROJECTS DEV.
FILE NO.: AF0707 CO-A-02

US Army Corps of Engineers Transatlantic Programs Center

ANA REGIONAL BRIGADE
PAKTIKA, AFGHANISTAN

STANDARD ARCHITECTRUAL DETAILS (1 OF 3)

SHEET REFERENCE NUMBER:
CO-A-02

$(getvar, "dwgprefix")$(getvar, "dwgname")$(edtime, 0, MON DD", " YYYY - HHMMam/pm)

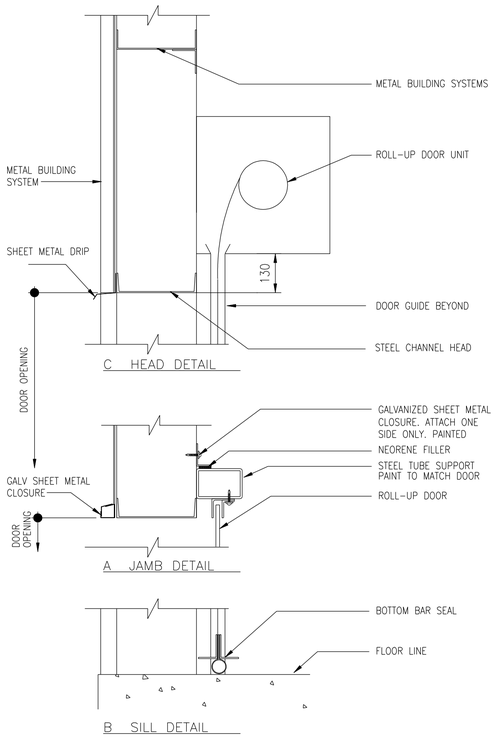

15 ROLL-UP DOOR DETAILS

CO-A-03 SCALE: 1:10

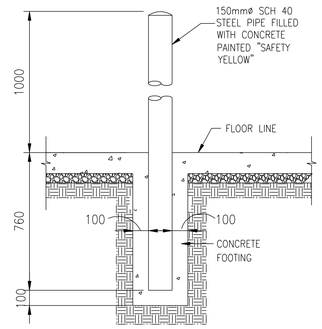

12 GUARD POST DETAIL (BOLLARD)

CO-A-03 SCALE: N.T.S.

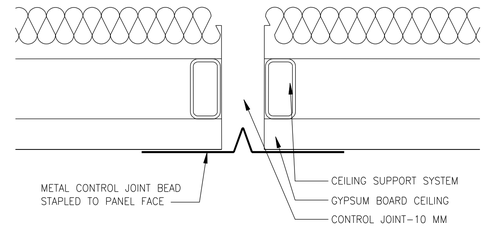

8 CEILING CONTROL JOINT @ GYP. BD.

CO-A-03 SCALE: N.T.S.

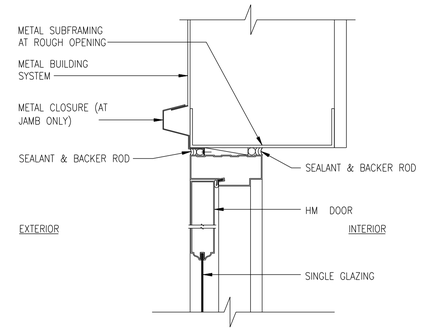

4 DOOR JAMB (HEAD SIM)

CO-A-03 SCALE: 1:5

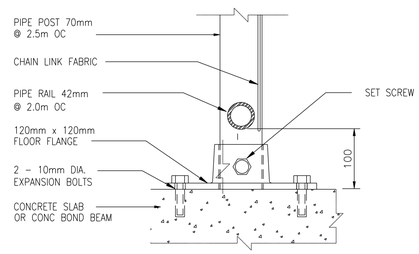

11 CHAIN LINK POST BASE DETAIL

CO-A-03 SCALE: 1:5

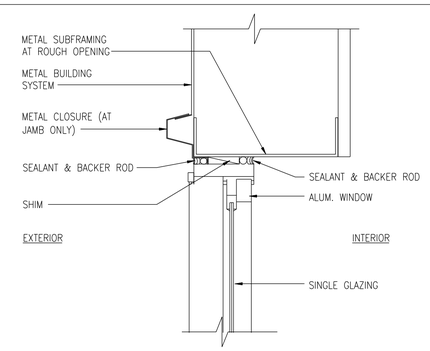

14 WINDOW JAMB DETAIL (EXTERIOR)

CO-A-03 SCALE: 1:5

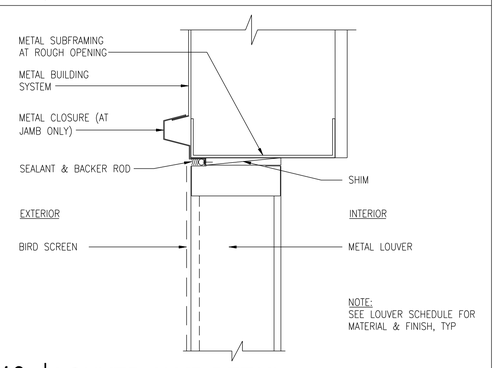

10 LOUVER JAMB DETAIL

CO-A-03 SCALE: 1:5

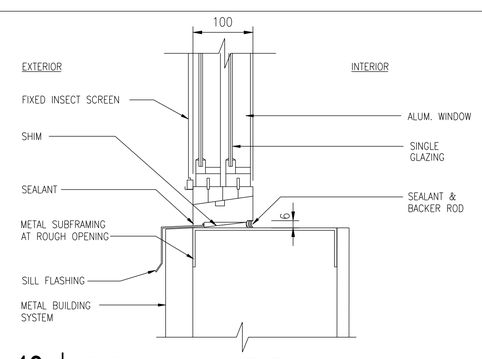

13 WINDOW SILL (HEAD SIM)

CO-A-03 SCALE: 1:5

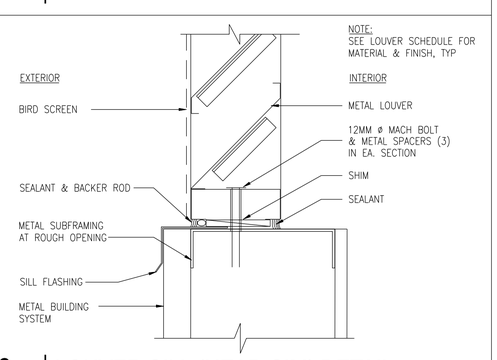

9 LOUVER SILL (HEAD SIM) DETAIL

CO-A-03 SCALE: 1:5

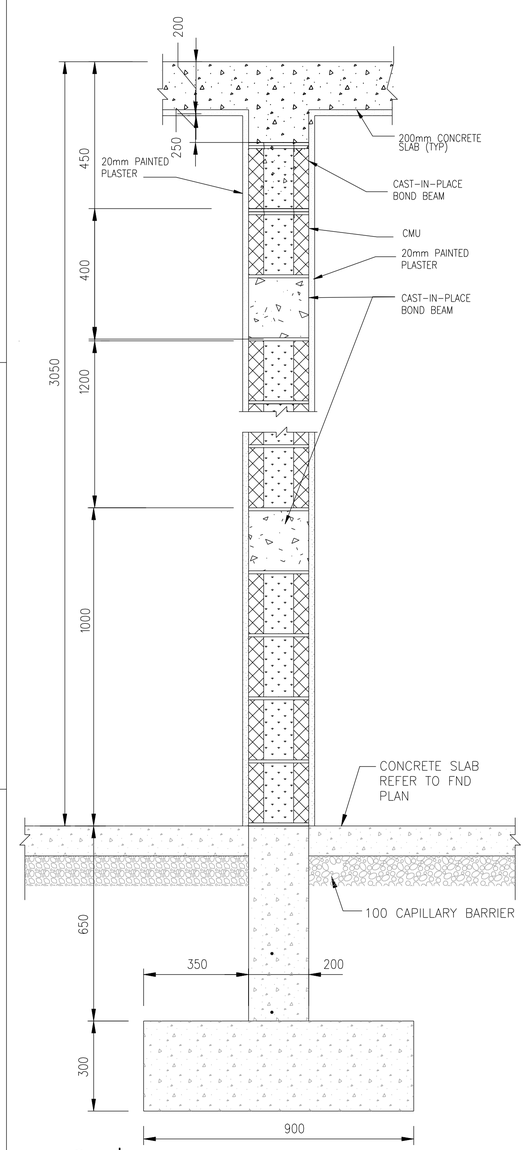

2 TYPICAL INTERIOR WALL SECTION

CO-A-03 SCALE: 1:5

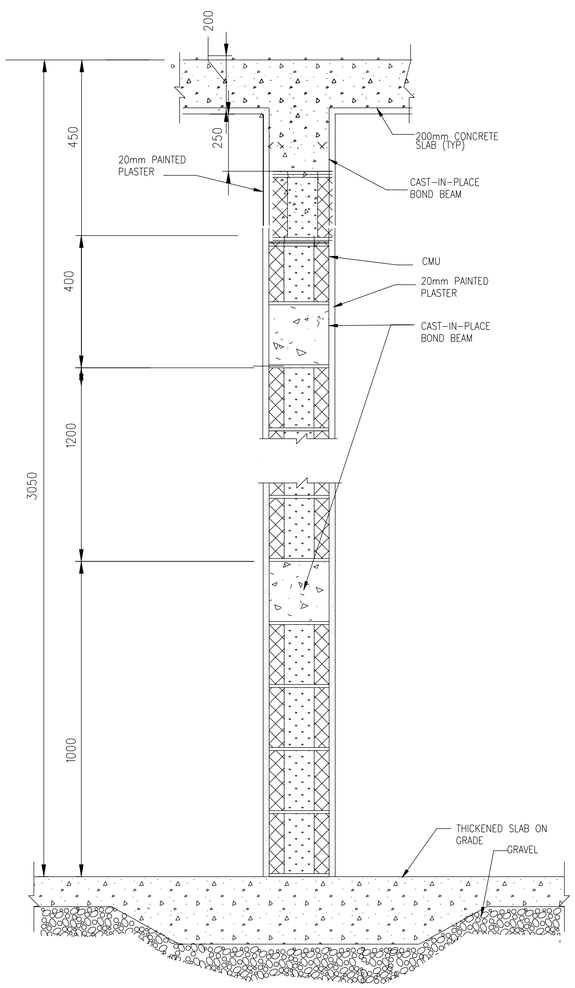

1 TYPICAL INTERIOR WALL SECTION

CO-A-03 SCALE: 1:5

0 .50 1.00
1:10
0 .10 .20 .30 .40 1
1:5

SYMBOL	DESCRIPTION	DATE	APR

DESIGNED BY: YSK
DATE: 04-11-07
DWN BY: JSG
SUBMITTED BY: CHIEF, PANEL O CHIEF, PROJECTS DEV
CHK BY: PLD
FILE NO.: AF070700-A-03

US Army Corps of Engineers Transatlantic Programs Center

ANA REGIONAL BRIGADE
PAKTIKA, AFGHANISTAN

STANDARD ARCHITECTRUAL DETAILS (2 OF 3)

SHEET REFERENCE NUMBER:
CO-A-03

$(getvar, "dwgprefix")$(getvar, "dwgname")$(edtime, O, MON DD",' YYYY - HHMMam/pm)

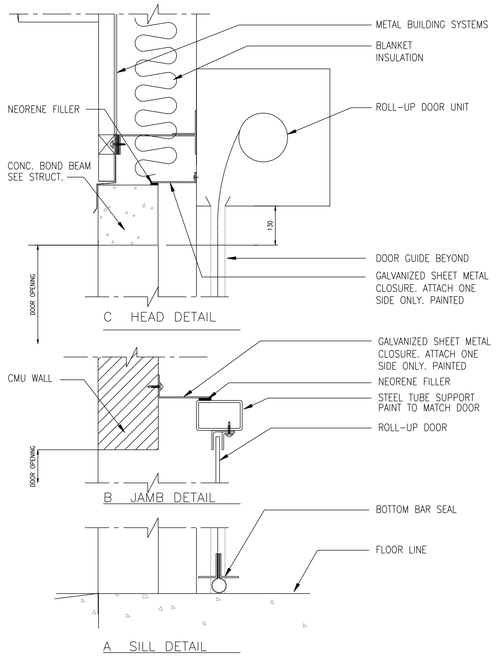

15 ROLL-UP DOOR DETAILS

CO-A-04 SCALE: 1:10

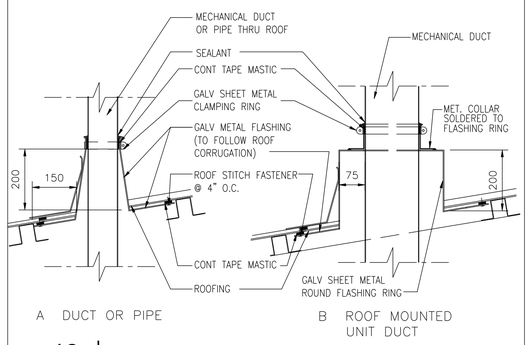

12 ROOF FLASHING THRU PENETRATION

CO-A-04 SCALE: 1:10

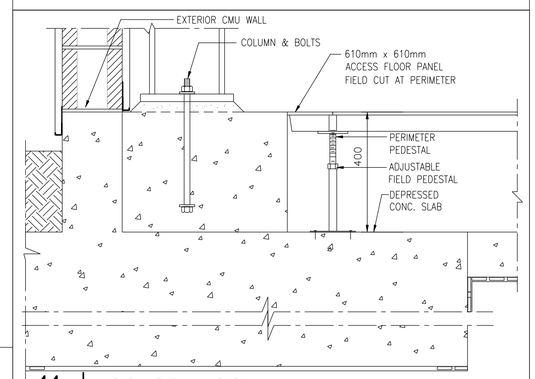

11 ACCESS FLOOR DETAIL

CO-A-04 SCALE: 1:10

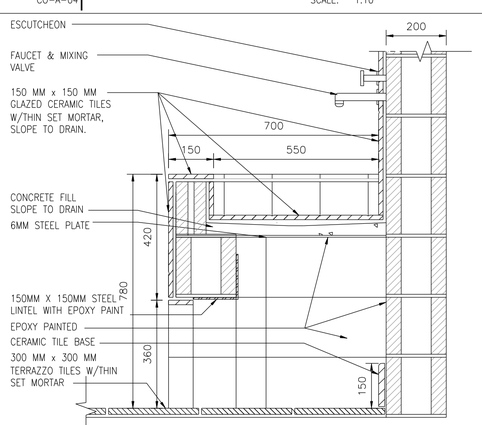

14 MULTI-FAUCET SINK DETAIL

CO-A-04 SCALE: 1:10

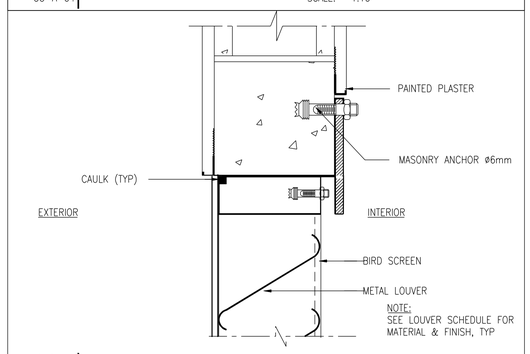

10 LOUVER HEAD (JAMB SIM) DETAIL

CO-A-04 SCALE: 1:5

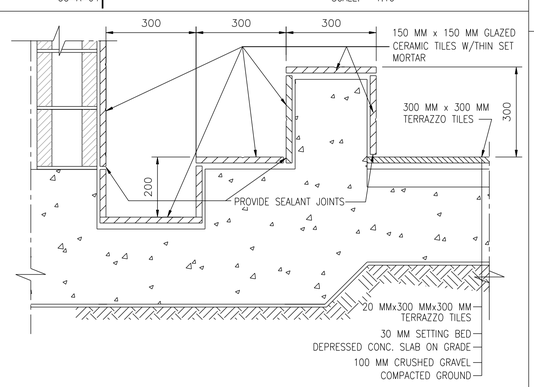

13 TYPICAL ABLUTION DRAIN DETAIL

CO-A-04 SCALE: 1:10

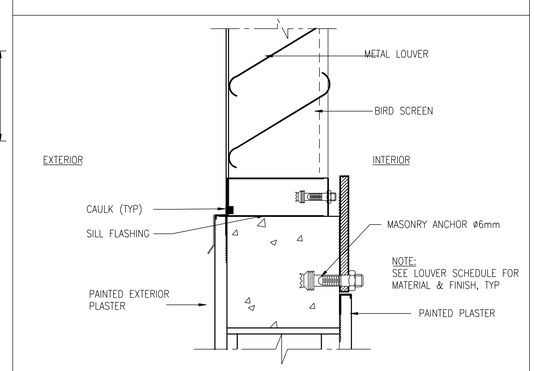

9 LOUVER SILL DETAIL

CO-A-04 SCALE: 1:5

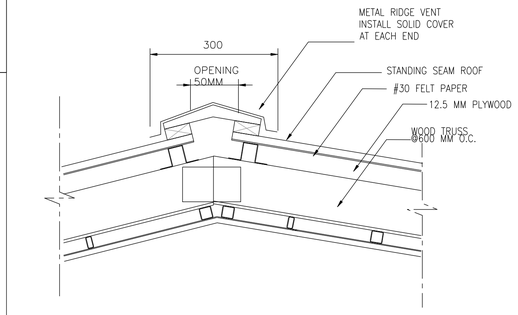

7 RIDGE VENT

CO-A-04 SCALE: 1:5

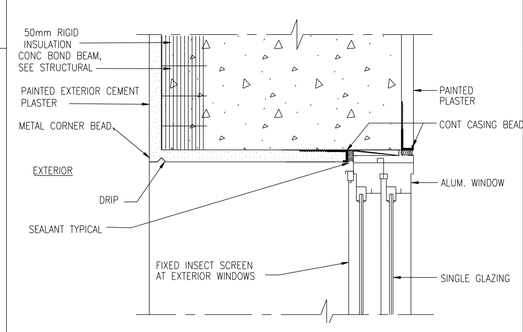

6 WINDOW HEAD (JAMB SIM) DETAIL

CO-A-04 SCALE: 1:5

5 NOT USED

CO-A-04 SCALE: 1:5

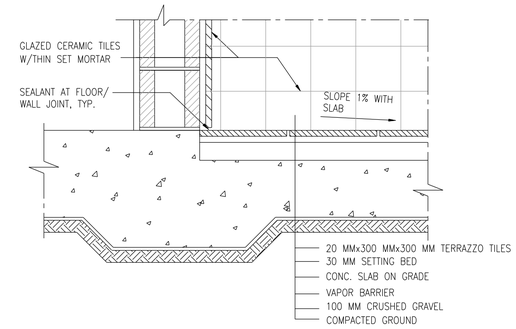

4 TERRAZZO TILE DETAIL

CO-A-04 SCALE: 1:10

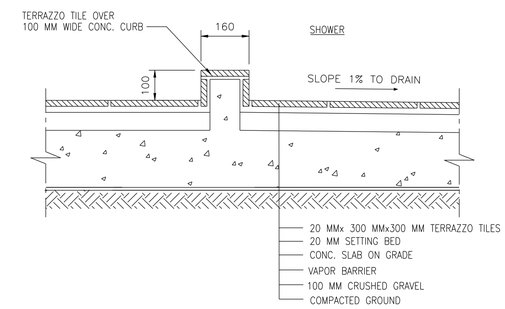

3 THRESHOLD DETAIL @ SHOWER

CO-A-04 SCALE: 1:10

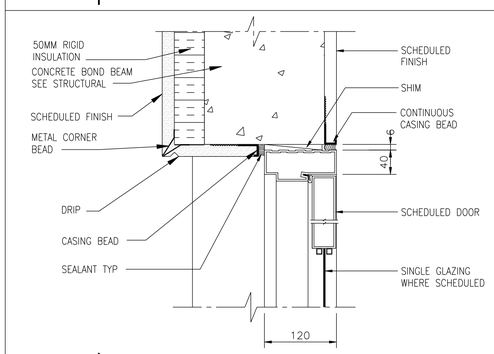

2 DOOR HEAD (JAMB SIM) DETAIL

CO-A-04 SCALE: 1:5

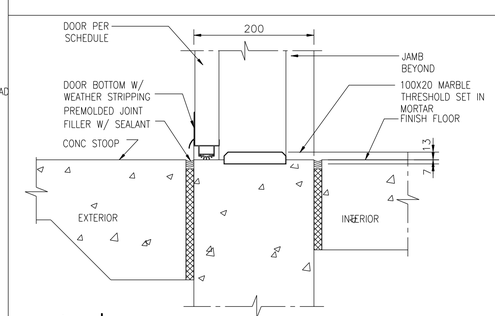

1 EXTERIOR DOOR THRESHOLD

CO-A-04 SCALE: 1:5

0 .50 1.00
1:10
0 .10 .20 .30 .40 1
1:5

SYMBOL	DESCRIPTION	DATE	APR

DESIGNED BY: YSK
DWN BY: JSG
CHK BY: PLD
DATE: 04-11-07
SUBMITTED BY: PHILIP J. DINELLO PROJECT MANAGER DEV
FILE NO.: AF070ZC0-A-04

US Army Corps of Engineers Transatlantic Programs Center

ANA REGIONAL BRIGADE
PAKTIKA, AFGHANISTAN

STANDARD ARCHITECTRUAL DETAILS (3 OF 3)

SHEET REFERENCE NUMBER:
CO-A-04

$(getvar, "dwgprefix")$(getvar, "dwgname")$(edtime, 0, MON DD"," YYYY - HMMam/pm)

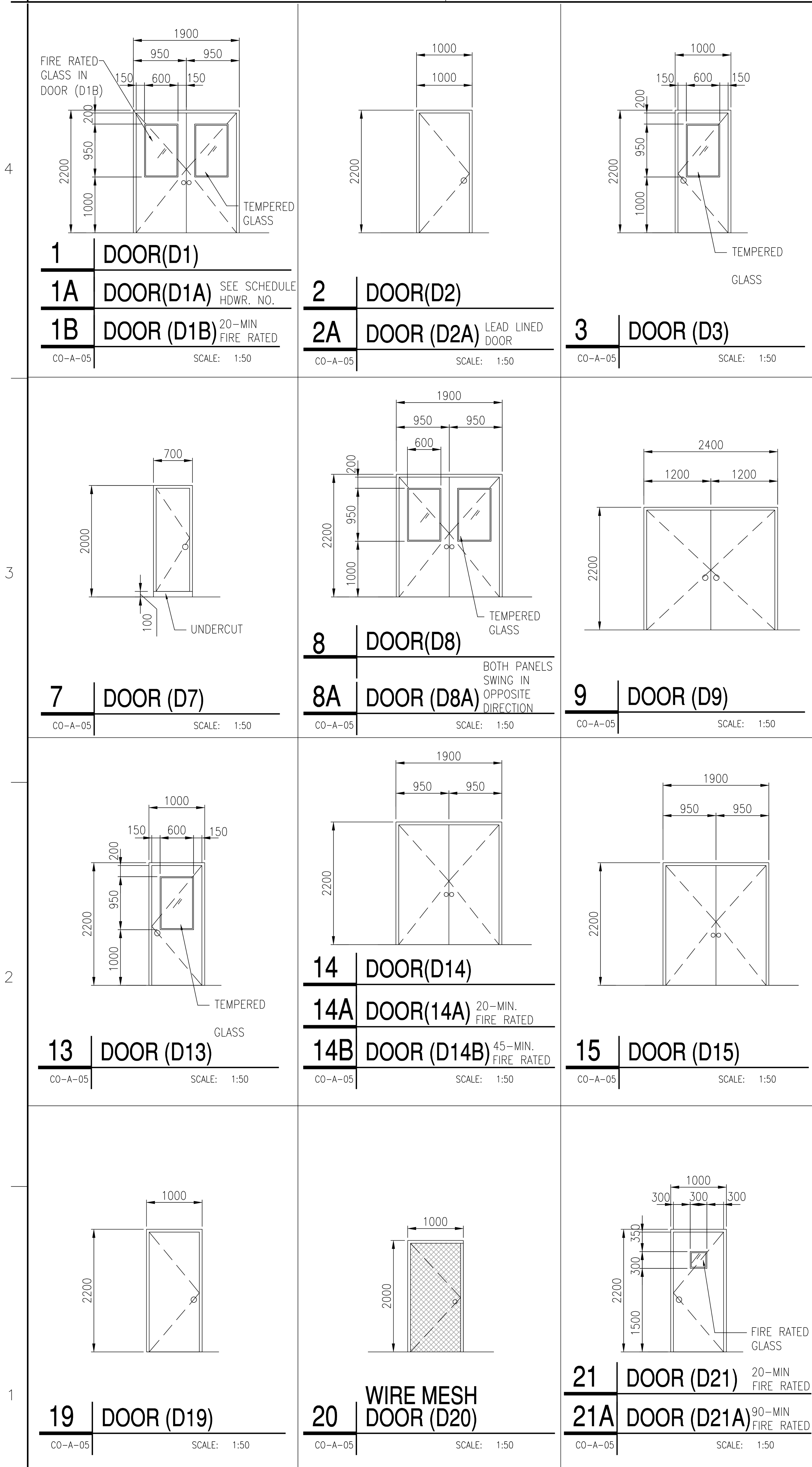

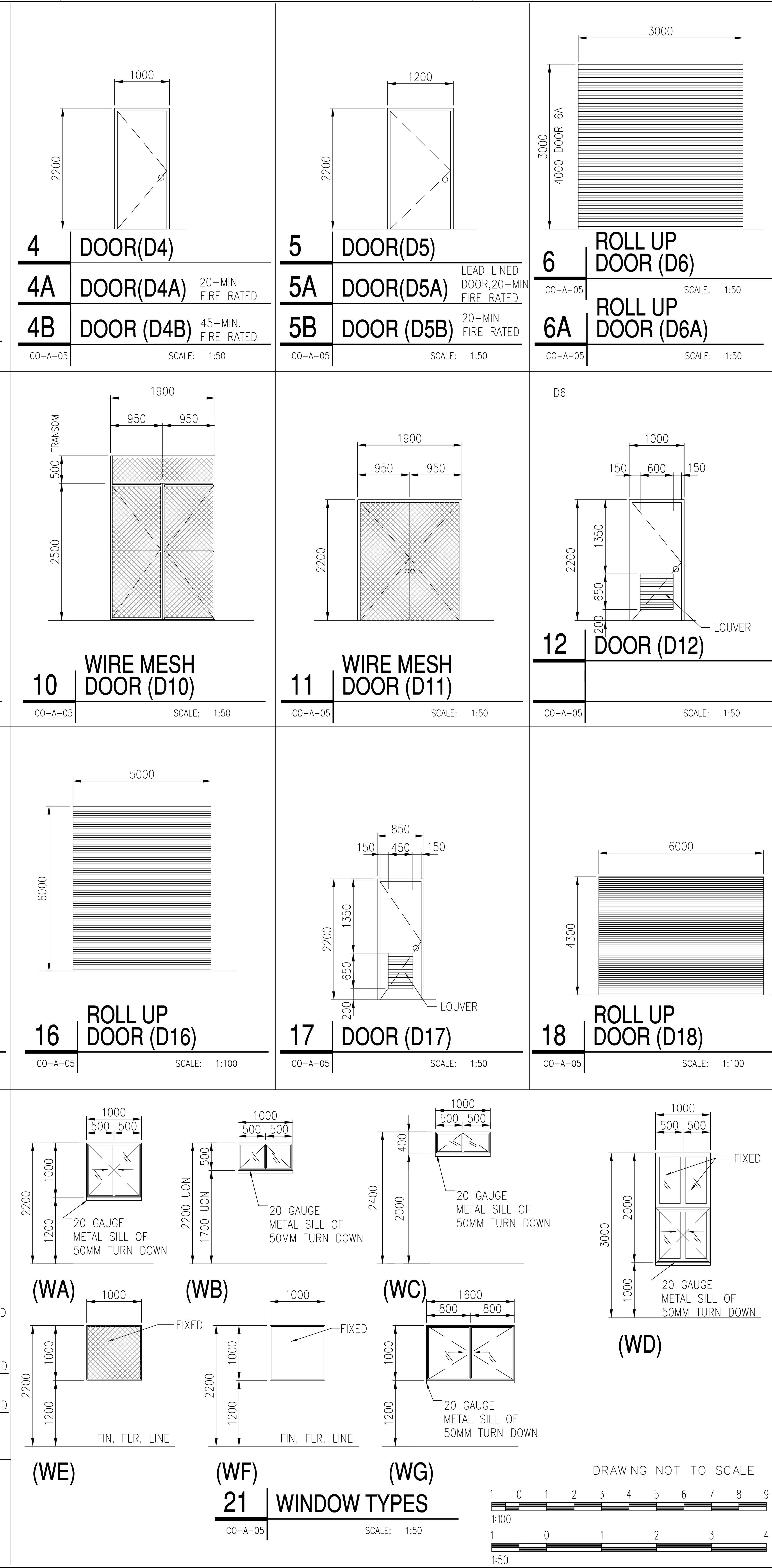

NOTES:
1. FOR HARDWARE SET DESCRIPTION SEE SPECIFICATIONS SECTION 08710 PARAGRAPH 3.5.
2. FOR DOOR DETAILS SEE 1 & 2/CO-A-04.
3. FOR WINDOW DETAILS SEE 5 & 6/CO-A-04.
4. INTERIOR WINDOWS SHALL NOT BE PROVIDED W/INSECT SCREEN.

DOOR SCHEDULE

DOOR NO.	DIMENSION WIDTH	DIMENSION HEIGHT	PANEL NUMBER	OPENING SYSTEM	HDWR. NO.	MATERIAL
D1	1900	2200	2	HINGED	DH-1	HM DOOR IN HM FRAME W/5MM TEMPERED GLASS
D1A	1900	2200	2	HINGED	DH-1A	HM DOOR IN HM FRAME W/5MM TEMPERED GLASS
D1B	1900	2200	2	HINGED	DH-1A	HM DOOR IN HM FRAME W/5MM TEMPERED GLASS, 20 MIN FIRE RATED
D2	1000	2200	1	HINGED	DH-7	HM DOOR IN HM FRAME
D2A	1000	2200	1	HINGED	DH-7	HM DOOR IN HM FRAME LEAD LINED
D3	1000	2200	1	HINGED	DH-2	HM DOOR IN HM FRAME W/5MM TEMPERED GLASS
D4	1000	2200	1	HINGED	DH-3	HM DOOR IN HM FRAME
D4A	1000	2200	1	HINGED	DH-3	HM DOOR IN HM FRAME; 20 MIN FIRE RATED
D4B	1000	2200	1	HINGED	DH-3	HM DOOR IN HM FRAME; 45 MIN FIRE RATED
D5	1200	2200	1	HINGED	DH-7	HM DOOR IN HM FRAME
D5A	1200	2200	1	HINGED	DH-7	HM DOOR IN HM FRAME LEAD LINED 20 MIN FIRE RATED
D5B	1200	2200	1	HINGED	DH-7	HM DOOR IN HM FRAME 20 MIN FIRE RATED
D6	3000	3000	1	ROLL-UP	–	STEEL DOOR & FRAME, MANUALLY OPERATED, NON-INSULATED
D6A	3000	4000	1	ROLL-UP	–	STEEL DOOR & FRAME, MANUALLY OPERATED, NON-INSULATED
D7	700	2000	1	HINGED	DH-10	HM DOOR IN HM FRAME
D8	1900	2200	2	HINGED	DH-11	HM DOOR IN HM FRAME W/ 5MM TEMPERED GLASS
D8A	1900	2200	2	HINGED	DH-6	HM DOOR IN HM FRAME W/ 5MM TEMPERED GLASS
D9	2400	2200	2	HINGED	DH-4	HM DOOR IN HM FRAME
D10	1900	2500	2	HINGED	–	GALVANIZED CHAIN LINK GATE W/ CHAIN LINK TRANSOM
D11	1900	2200	2	HINGED	–	INSECT METAL SCREEN IN METAL FRAME
D12	1000	2200	1	HINGED	DH-9	HM DOOR IN HM FRAME W/ LOUVER
D12A	1000	2200	1	HINGED	DH-9	HM DOOR IN HM FRAME W/ FIRE DAMPER FUSIBLE LINK LOUVER 20 MIN FIRE RATED
D13	1000	2200	1	HINGED	DH-7	HM DOOR IN HM FRAME W/ 5MM TEMPERED GLASS
D14	1900	2200	2	HINGED	DH-6	HM DOOR IN HM FRAME
D14A	1900	2200	2	HINGED	DH-6	HM DOOR IN HM FRAME; 20 MIN FIRE RATED
D14B	1900	2200	2	HINGED	DH-6	HM DOOR IN HM FRAME; 45 MIN FIRE RATED
D15	1900	2200	2	HINGED	DH-6	HM DOOR IN HM FRAME
D16	5000	6000	1	ROLL-UP	–	STEEL DOOR & FRAME, MANUALLY OPERATED, NON-INSULATED
D17	850	2200	1	HINGED	DH-7	HM DOOR IN HM FRAME W/ LOUVER
D18	6000	4300	1	ROLL-UP	–	STEEL DOOR & FRAM, MANUALLY OPERATED, NON-INSULATED
D19	1000	2200	1	HINGED	DH-3A	HM DOOR IN HM FRAME
D20	1000	2000	1	HINGED	–	INSECT METAL SCREEN IN METAL FRAME
D21	1000	2200	1	HINGED	DH-3	HM DOOR IN HM FRAME; 20 MIN FIRE RATED
D21A	1000	2200	1	HINGED	DH-3	HM DOOR IN HM FRAME; 90 MIN FIRE RATED

WINDOW SCHEDULE

WINDOW NUMBER	DIMENSION WIDTH	DIMENSION HEIGHT	DIMENSION SILL HEIGHT	PANEL NUMBER	OPENING SYSTEM	DESCRIPTION
WA	1000	1000	1200	2	SLIDER	ALUM. PANELS W/TRANSPARENT 5MM GLASS METAL SILL AND FIXED INSECT METAL SCREEN; SEE WINDOW NOTE 5
WB	1000	500	1700	2	HINGED	ALUM. PANELS W/TRANSPARENT 5MM GLASS METAL SILL AND FIXED INSECT METAL SCREEN; SEE WINDOW NOTE 5
WC	1000	400	2000	2	HINGED	ALUM. PANELS W/TRANSPARENT 5MM GLASS METAL SILL AND FIXED INSECT METAL SCREEN; SEE WINDOW NOTE 5
WD	1000	2000	1000	4	FIXED ABOVE/ SLIDER	ALUM. PANELS W/TRANSPARENT 5MM GLASS METAL SILL AND FIXED INSECT METAL SCREEN AT OPERABLE UNIT; SEE WINDOW NOTE 5
WE	1000	1000	1200	1	FIXED	ALUM. PANELS W/5MM WIRE GLASS; SEE WINDOW NOTE 5
WF	1000	1000	1200	1	FIXED	ALUM. PANELS W/5MM GLASS; SEE WINDOW NOTE 5
WG	1600	1000	1200	2	SLIDER	ALUM. PANELS W/TRANSPARENT 5MM GLASS METAL SILL AND FIXED INSECT METAL SCREEN; SEE WINDOW NOTE 5

SYMBOL DESCRIPTION DATE APR

DESIGNED BY: YSK
DWN BY: JSG
CHK BY: PLD
DATE: 04-11-07
SUBMITTED BY: PHILIP L. DINELLO CHIEF, PDT FACILITIES DEV
FILE NO.: AF0707CO-A-05

US Army Corps of Engineers Transatlantic Programs Center

ANA REGIONAL BRIGADE
PAKIKA, AFGHANISTAN

OPENING SCHEDULES AND TYPES (1 OF 2)

SHEET REFERENCE NUMBER:
CO-A-05

$(getvar, "dwgprefix")$(getvar, "dwgname")$(edtime, 0, MON DD"," YYYY - H:MMam/pm)

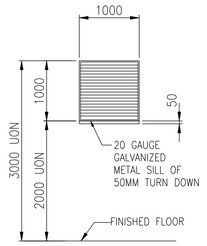

1 LOUVER (L1)
CO-A-06 SCALE: 1:50

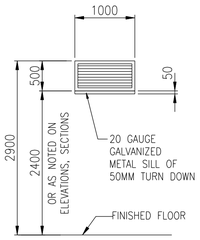

2 LOUVER (L2)
CO-A-06 SCALE: 1:50

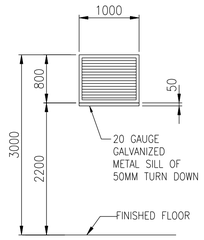

3 LOUVER (L3)
CO-A-06 SCALE: 1:50

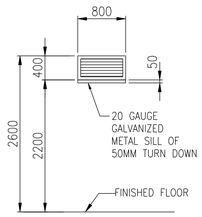

4 LOUVER (L4)
CO-A-06 SCALE: 1:50

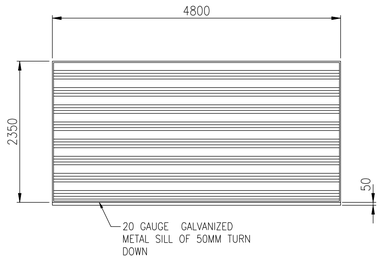

5 LOUVER (L5)
CO-A-06 SCALE: 1:50

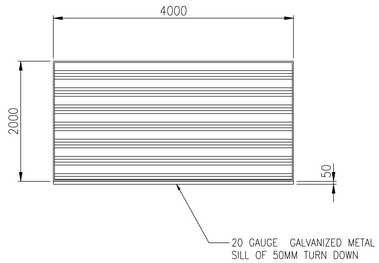

6 LOUVER (L6)
CO-A-06 SCALE: 1:50

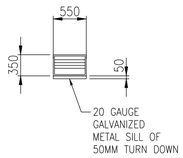

7 LOUVER (L7)
CO-A-06 SCALE: 1:50

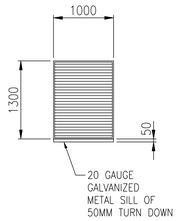

8 LOUVER (L8)
CO-A-06 SCALE: 1:50

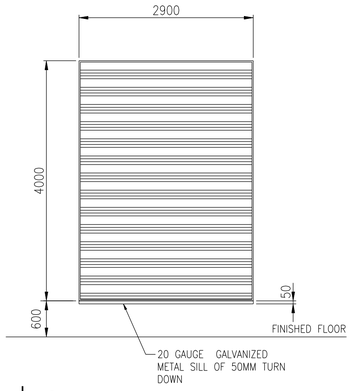

9 LOUVER (L9)
CO-A-06 SCALE: 1:50

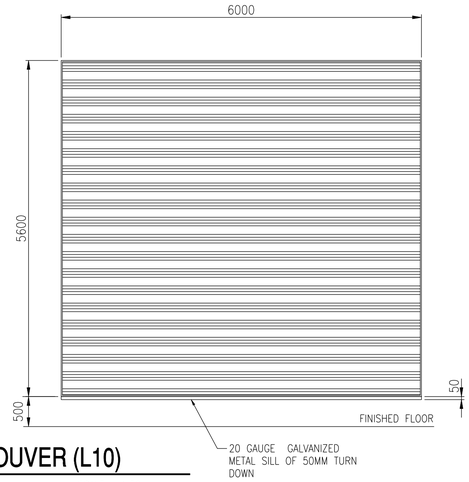

10 LOUVER (L10)
CO-A-06 SCALE: 1:50

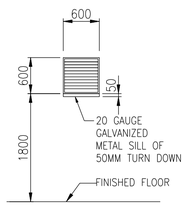

11 LOUVER (L11)
CO-A-06 SCALE: 1:50

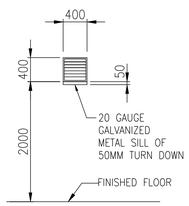

12 LOUVER (L12)
CO-A-06 SCALE: 1:50

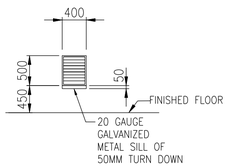

13 LOUVER (L13)
CO-A-06 SCALE: 1:50

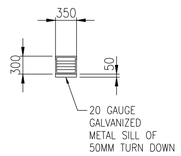

14 LOUVER (L14)
CO-A-06 SCALE: 1:50

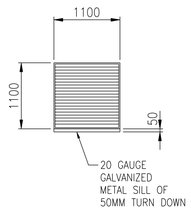

15 LOUVER (L15)
CO-A-06 SCALE: 1:50

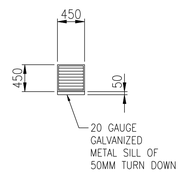

16 LOUVER (L16)
CO-A-06 SCALE: 1:50

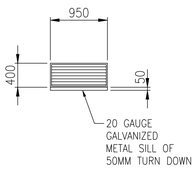

17 LOUVER (L17)
CO-A-06 SCALE: 1:50

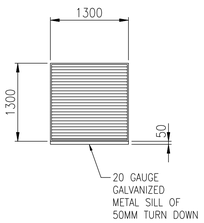

18 LOUVER (L18)
CO-A-06 SCALE: 1:50

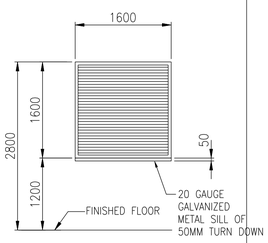

19 LOUVER (L19)
CO-A-06 SCALE: 1:50

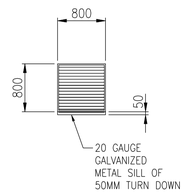

20 LOUVER (L20)
CO-A-06 SCALE: 1:50

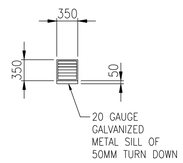

21 LOUVER (L21)
CO-A-06 SCALE: 1:50

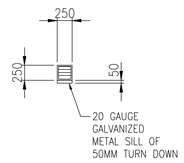

22 LOUVER (L22)
CO-A-06 SCALE: 1:50

LOUVER SCHEDULE

WINDOW NUMBER	DIMENSION			DESCRIPTION
	WIDTH	HEIGHT	SILL HEIGHT	
L1	1000	1000	2000	METAL LOUVER WEATHER RESISTANT W/ BIRD METAL SCREEN
L2	1000	500	2400	METAL LOUVER WEATHER RESISTANT W/ BIRD METAL SCREEN
L3	1000	800	2200	METAL LOUVER WEATHER RESISTANT W/ BIRD METAL SCREEN
L4	800	400	2200	METAL LOUVER WEATHER RESISTANT W/ BIRD METAL SCREEN
L5	4800	2350	–	METAL LOUVER WEATHER RESISTANT W/ BIRD METAL SCREEN
L6	4000	2000	–	METAL LOUVER WEATHER RESISTANT W/ BIRD METAL SCREEN
L7	550	350	–	METAL LOUVER WEATHER RESISTANT W/ BIRD METAL SCREEN
L8	1000	1300	–	METAL LOUVER WEATHER RESISTANT W/ BIRD METAL SCREEN
L9	2900	4000	600	METAL LOUVER WEATHER RESISTANT W/ BIRD METAL SCREEN
L10	6000	5600	500	METAL LOUVER WEATHER RESISTANT W/ BIRD METAL SCREEN
L11	600	600	1800	METAL LOUVER WEATHER RESISTANT W/ BIRD METAL SCREEN
L12	400	400	2000	METAL LOUVER WEATHER RESISTANT W/ BIRD METAL SCREEN
L13	400	500	450	METAL LOUVER WEATHER RESISTANT W/ BIRD METAL SCREEN
L14	350	300	–	METAL LOUVER WEATHER RESISTANT W/ BIRD METAL SCREEN
L15	1100	1100	–	METAL LOUVER WEATHER RESISTANT W/ BIRD METAL SCREEN
L16	450	450	–	METAL LOUVER WEATHER RESISTANT W/ BIRD METAL SCREEN
L17	950	400	–	METAL LOUVER WEATHER RESISTANT W/ BIRD METAL SCREEN
L18	1300	1300	–	METAL LOUVER WEATHER RESISTANT W/ BIRD METAL SCREEN
L19	1600	1600	1200	METAL LOUVER WEATHER RESISTANT W/ BIRD METAL SCREEN
L20	800	800	–	METAL LOUVER WEATHER RESISTANT W/ BIRD METAL SCREEN
L21	350	350	–	METAL LOUVER WEATHER RESISTANT W/ BIRD METAL SCREEN
L22	250	250	–	METAL LOUVER WEATHER RESISTANT W/ BIRD METAL SCREEN

NOTES:

1. FOR LOUVER DETAILS SEE 9 & 10/CO-A-04.
2. FOR SECURED LOUVER DETAILS SEE 5/CO-A-02.

DRAWING NOT TO SCALE
1 0 1 2 3 4
1:50

SYMBOL	DESCRIPTION	DATE	APR

DESIGNED BY: YSK
DATE: 04-11-07
DWN BY: JSG
SUBMITTED BY: PANELLO CHIEF PDT PACIFICS DEV
CHK BY: PLD
FILE NO.: AF0707CO-A-06

US Army Corps of Engineers Transatlantic Programs Center

ANA REGIONAL BRIGADE
PAKTIKA, AFGHANISTAN

OPENING SCHEDULES AND TYPES
(2 OF 2)

SHEET REFERENCE NUMBER:
CO-A-06

$(getvar, "dwgprefix")$(getvar, "dwgname")$(edtime, O, MON DD",", YYYY - HHMMam/pm)

LINTEL SCHEDULE	
Lintel Type	Opening Width
Lintel 1	TYPICAL
Lintel 2	WHEN A BEAM IS OVER A WINDOW OR DOOR.
NOTE: BEARING AT EACH END = 600mm MINIMUM	

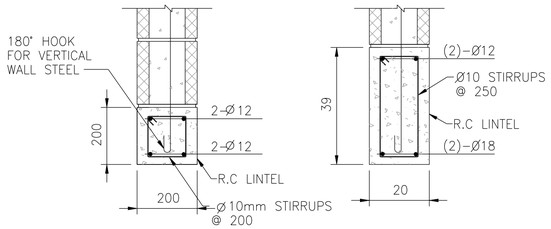

Lintel 1 Lintel 2

6 LINTEL REINFORCEMENT SCHEDULE AND SECTIONS

CO-S-01 SCALE: 1:10

SLAB ON GRADE NOTES:

1. THE SLAB ON GRADE THICKNESS IS 150 mm UNLESS NOTED OTHERWISE.
2. MAXIMUM DIMENSIONS OF ANY PANEL IS 4000x4000 mm.
3. CONTROL JOINT FOR THE SLAB ON GRADE SHALL BE DONE EVERY MAXIMUM 4000 mm.
4. EXPANSION JOINT FOR THE SLAB ON GRADE SHALL BE DONE AT MAX. SPACING 40,000 mm FOR EXTERIOR PAVEMENT ONLY
5. PLEASE, FOLLOW ALL REQUIREMENTS OF GEOTECHNICAL REPORT.

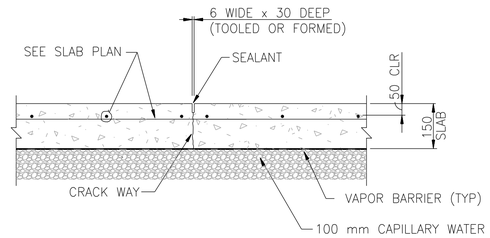

3 SLAB ON GRADE CONTROL JOINT

CO-S-01 SCALE: 1:10

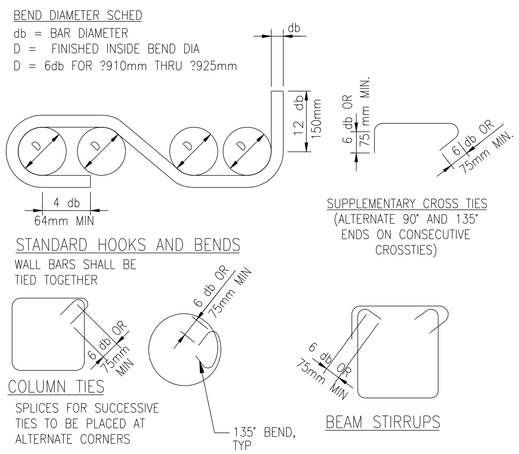

8 TYP. REINF BAR, BENDS, STIRRUPS AND TIES

CO-S-01 SCALE: N.T.S.

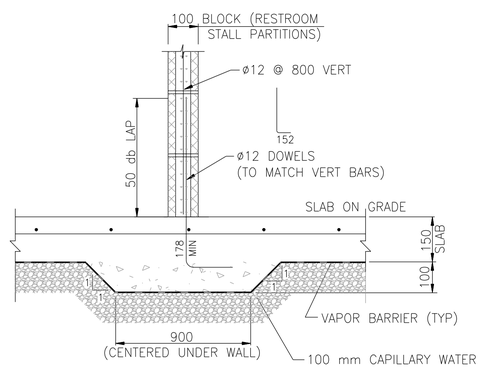

5 INTERIOR PEB BLOCK WALL

CO-S-01 SCALE: 1:10

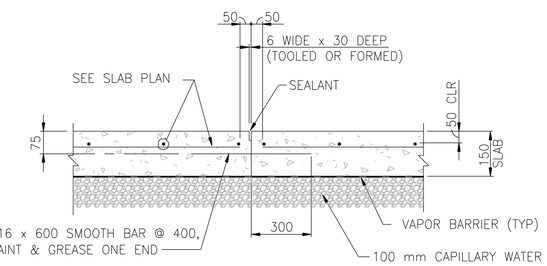

2 SLAB ON GRADE CONSTRUCTION JOINT

CO-S-01 SCALE: 1:10

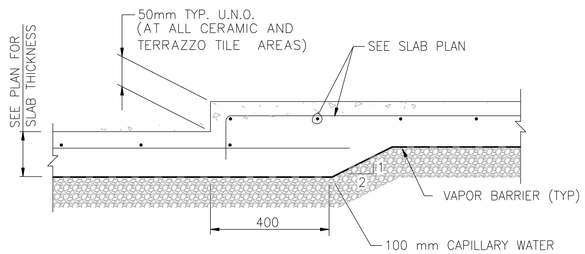

7 DEPRESSED SLAB

CO-S-01 SCALE: 1:10

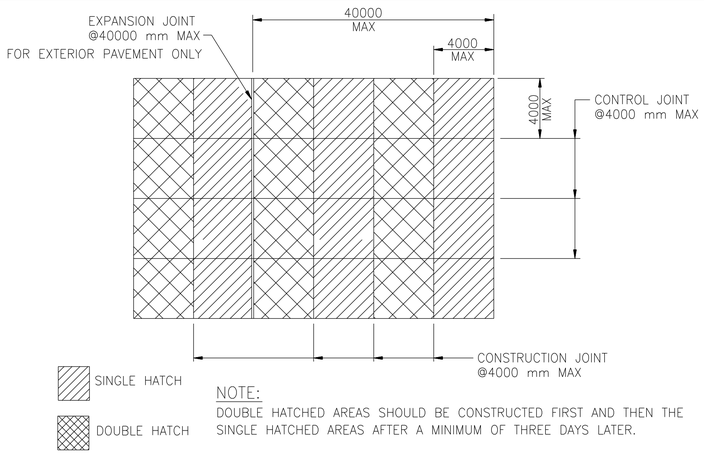

NOTE:
DOUBLE HATCHED AREAS SHOULD BE CONSTRUCTED FIRST AND THEN THE SINGLE HATCHED AREAS AFTER A MINIMUM OF THREE DAYS LATER.

1 TYPICAL SLAB ON GRADE POURING PATTERN

CO-S-01 SCALE: N.T.S

0 .50 1.00
1:10

DRAWING NOT TO SCALE

SYMBOL	DESCRIPTION	DATE	APR

DESIGNED BY: TCP
DWN BY: AMG
CHK BY: KGO
DATE: 04-11-07
SUBMITTED BY: CHIEF, PANELLO DEV & PROT FACILITIES
FILE NO.: AF070700-S-01

US Army Corps of Engineers Transatlantic Programs Center

ANA REGIONAL BRIGADE
PAKTIKA, AFGHANISTAN

TYPICAL SLAB ON GRADE AND LINTEL DETAILS

SHEET REFERENCE NUMBER:
CO-S-01

$(getvar, "dwgprefix")$(getvar, "dwgname")$(edtime, 0, MON DD,"", YYYY - HH:MMam/pm)

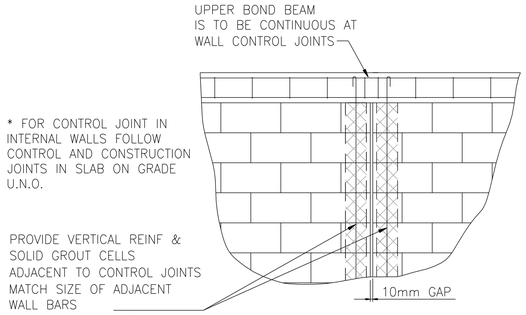

10 CMU WALL CONTROL JOINT

CO-S-02 SCALE: 1:20

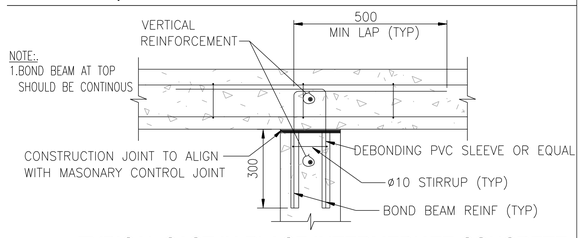

9 TYPICAL CAST-IN-PLACE INTERMEDIATE CONCRETE BOND BEAM INTERSECTION PLAN

CO-S-02 SCALE: 1:10

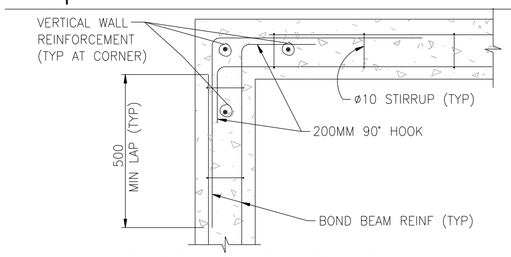

8 TYPICAL CAST-IN-PLACE CONCRETE BOND BEAM CORNER PLAN

CO-S-02 SCALE: 1:10

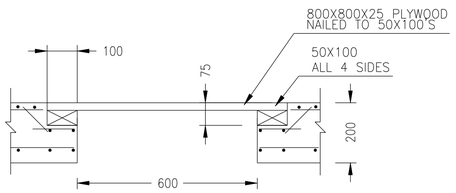

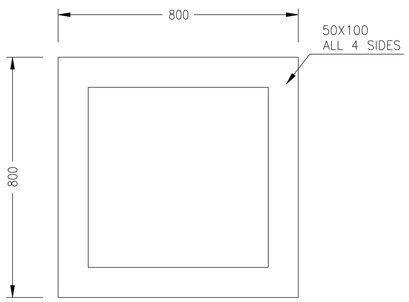

1 TYPICAL CAST-IN-PLACE CONCRETE ROOF OPENNING

CO-S-02 SCALE: 1:10

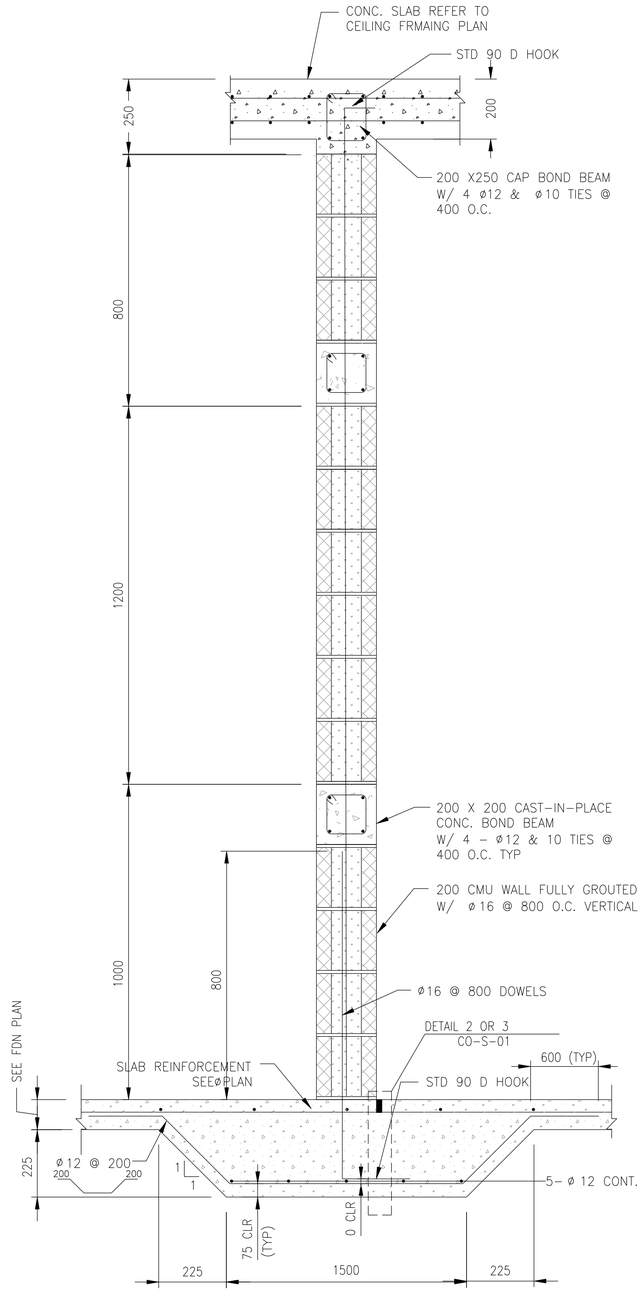

6 SECTION THROUGH INTERIOR CMU WALL

CO-S-02 SCALE: 1:10

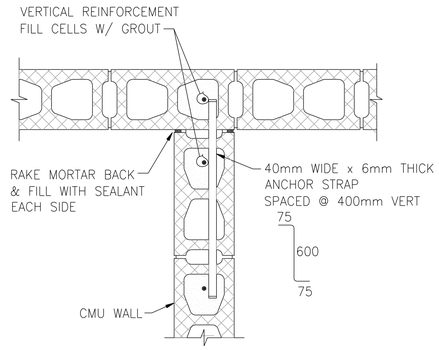

4 TYPICAL CMU WALL INTERSECTION

CO-S-02 (SHOWN BETWEEN BOND BEAMS) SCALE: 1:10

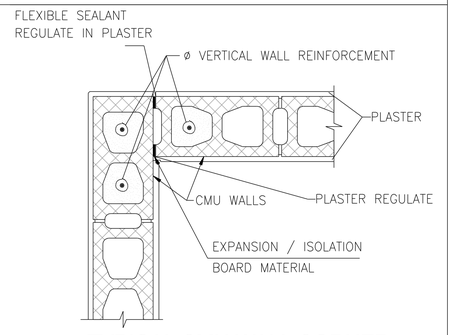

3 TYPICAL CMU WALL CORNER REINFORCING DETAIL

CO-S-02 (SHOWN BETWEEN BOND BEAMS) SCALE: 1:10

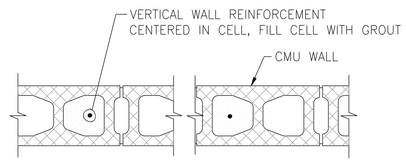

2 TYPICAL CMU WALL REINFORCING

CO-S-02 SCALE: 1:10

FOUNDATION NOTES:

1. FOUNDATION DESIGN IS BASED ON ALLOWABLE BEARING CAPACITY OF (1.0 Kg/cm)^2
2. ALL FOOTINGS SHALL BE FOUNDED ON SATISFACTORY MATERIAL.
3. SEE SPECIFICATION FOR REINFORCING STEEL. THE MINIMUM GRADE SHALL BE F =60KSI (4218 Kg/cm ^{2}).
4. SEE SPECIFICATION FOR CAST-IN-PLACE STRUCTURAL CONCRETE. MINIMUM 28 DAY, CYLINDER STRENGTH f'c=4000PSI (280 Kg/cm^2).
5. ALL DIMENSIONS ARE IN MILLIMETERS.

CMU WALL NOTES:

GENERAL:

1. ENGINEERED MASONRY IS DESIGNED IN ACCORDANCE WITH "BUILDING CODE REQUIREMENTS FOR MASONRY STRUCTURES" (ACI 530-99/ ASCE 5-99/TMS 402-99).
2. UNITS: ASTM C90, TYPE (I) (NORMAL WEIGHT, MOISTURE CONTROLLED) (OR EQUIVALENT DIN, ACI OR EN STANDARDS)
   MORTAR: ASTM C270 TYPE S (OR EQUIVALENT DIN, ACI OR EN STANDARDS)
3. FULLY GROUT ALL CELLS CONTAINING REINFORCING STEEL OR ANCHORS.
4. USE FULL CONTACT LAP SPLICES FOR REINFORCING STEEL IN CMU WALLS AS FOLLOWS UNLESS NOTED OTHERWISE: 50 db
5. SEE SPECIFICATION FOR MASONRY BLOCK. ALL VERTICAL CELLS OF MASONRY BLOCK WITH REINFORCING SHALL BE GROUTED SOLID TO FORM A COMPOSITE MASONRY AND STEEL ASSEMBLY.

VERTICAL REINFORCEMENT:

1. PROVIDE AN ADDITIONAL VERTICAL REINFORCEMENT AT EACH SIDE OF INTERSECTION OF EXTERIOR WALLS, AND AT EACH SIDE OF ALL MASONRY OPENINGS GREATER THAN 250mm IN WIDTH. IN OPENINGS WIDER THAN 600mm, PROVIDE ADDITIONAL VERTICAL REINFORCEMENT IN TWO ADJACENT CELLS ON EACH SIDE OF THE OPENING. ADDED VERTICAL REINFORCEMENT SHALL BE CONTINUOUS FOR THE FULL HEIGHT OF WALL UNLESS NOTED OTHERWISE.

HORIZONTAL REINFORCEMENT:

1. PROVIDE BOND BEAMS AT 1200mm MAXIMUM VERTICAL SPACING. (EXCEPT AT RESTROOM AND SHOWER STALL PARTITION WALLS)
2. PROVIDE LINTEL ABOVE ALL MASONRY OPENINGS AS IN DETAIL NO. 6/CO-S-01
3. PROVIDE BOND BEAM BELOW ALL MASONRY OPENINGS AND EXTEND A MINIMUM OF 400mm BEYOND EACH SIDE OF OPENING.

DRAWING NOT TO SCALE

1:10 0 .50 1.00
1:20 1 .50 0 1
1:50 1 0 1 2 3 4

SYMBOL	DESCRIPTION	DATE	APR

DESIGNED BY: W.YTCP
DATE: 04-11-07
SUBMITTED BY: CHIEF, PANEL I.Q CHIEF, DIST. FACILITIES DEV
DWN BY: W.YAMG
FILE NO.: AF070700-S-02
CHK BY: M.MKGO

US Army Corps of Engineers Transatlantic Programs Center

ANA REGIONAL BRIGADE
PAKTIKA, AFGHANISTAN

TYPICAL FOUNDATION AND MASONRY WALL DETAILS

SHEET REFERENCE NUMBER:
CO-S-02

$(getvar, "dwgprefix")$(getvar, "dwgname")$(edtime, O, MON DD", " YYYY - HHMMam/pm)

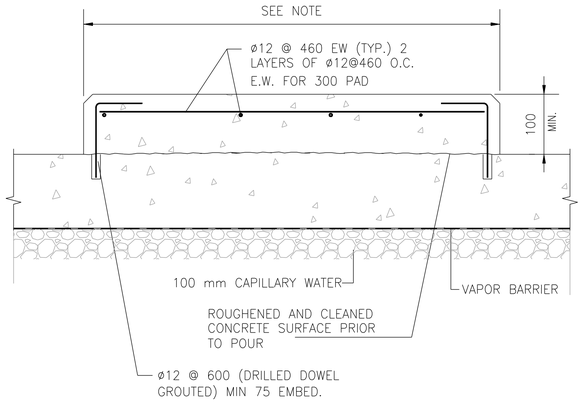

NOTE:

1– CONTRACTOR TO COORDINATE SIZE AND LOCATION OF PADS WITH ELECTRICAL AND MECHANICAL CONTRACTORS.

2– SIZE & LOCATION OF EQUIPMENT PADS SHALL BE COORDINATED WITH THE EQUIPMENT FURNISHED .

3– SEE MECHANICAL, ELECTRICAL AND PLUMBING DRAWINGS FOR THE HEIGHT OF EACH PAD.

2 TYPICAL EQUIPMENT PAD DETAIL

CO–S–03 SCALE: 1:10

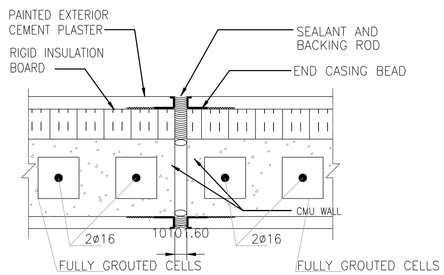

NOTE:.

THIS DETAIL IS VALID ONLY AT ALL CONTROL JOINT

FOR LOCATION OF CONTROL JOINTS REFER TO ARCHITECT DRAWINGS

3 TYPICAL DETAIL AT CONTROL JOINT

CO–S–03 SCALE: 1:5

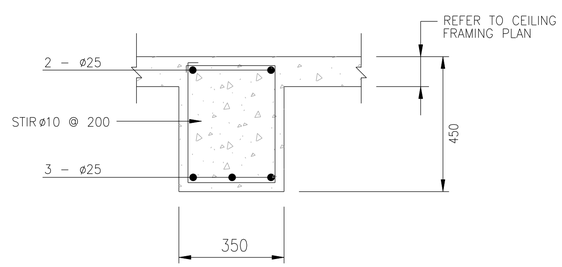

4 TYPICAL BEAM SECTION

CO–S–03 SCALE: 1:10

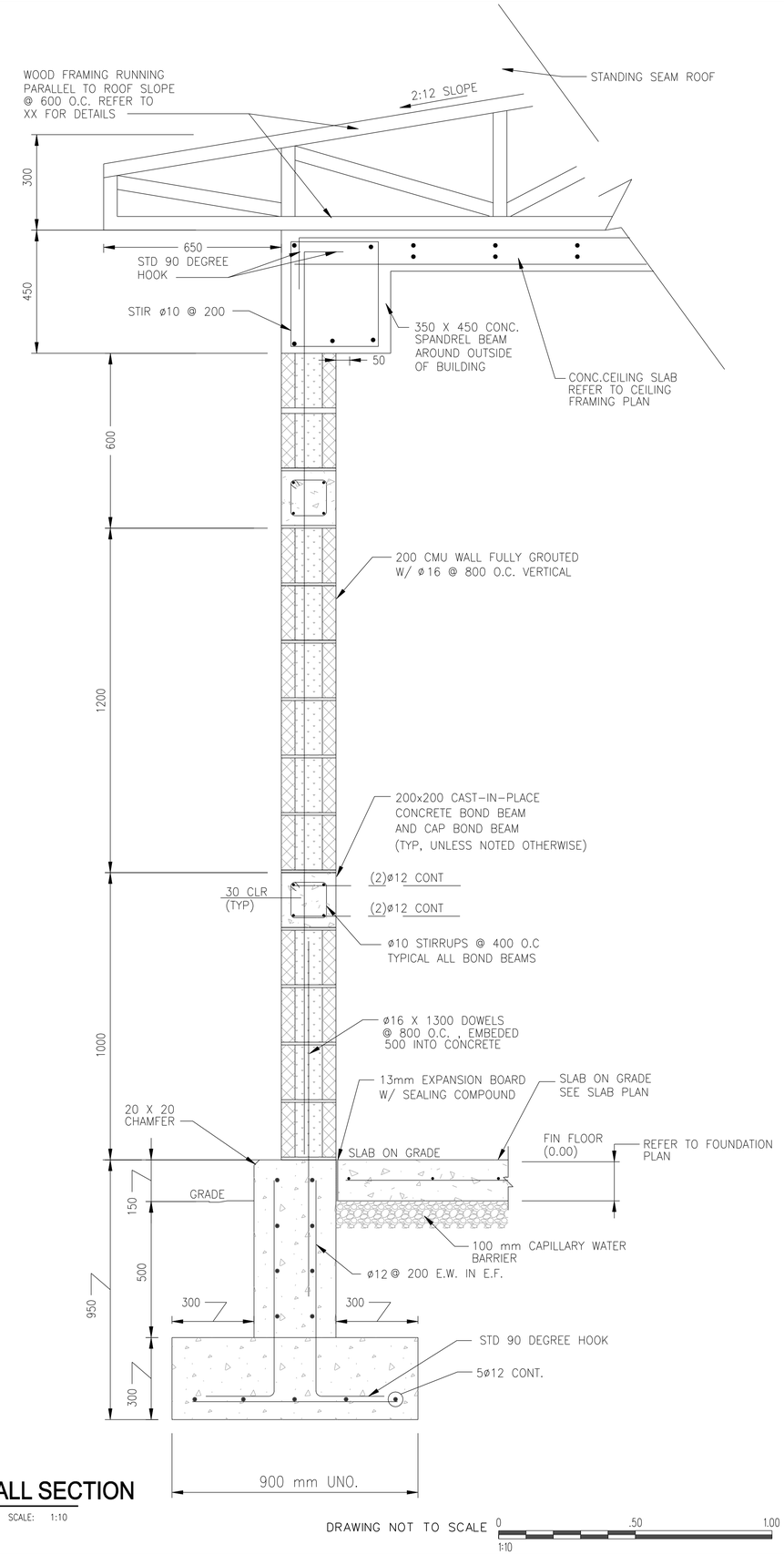

1 TYPICAL EXTERIOR CMU WALL SECTION

CO–S–03 SCALE: 1:10

DRAWING NOT TO SCALE 0 .50 1.00 1:10

SYMBOL	DESCRIPTION	DATE	APR

DESIGNED BY: TCP
DATE: 04-11-07
DWN BY: AMG
SUBMITTED BY: PHILIP J. DINELLO, P.E. PROJECTS DEV
CHK BY: KGO
FILE NO.: AF0707 CO-S-03

US Army Corps of Engineers Transatlantic Programs Center

ANA REGIONAL BRIGADE
PAKTIKA, AFGHANISTAN

TYPICAL ROOF FRAMING DETAILS

SHEET REFERENCE NUMBER:
CO–S–03

$(getvar, "dwgprefix")$(getvar, "dwgname")$(edtime, 0, MON DD"", " YYYY – H:MMam/pm)

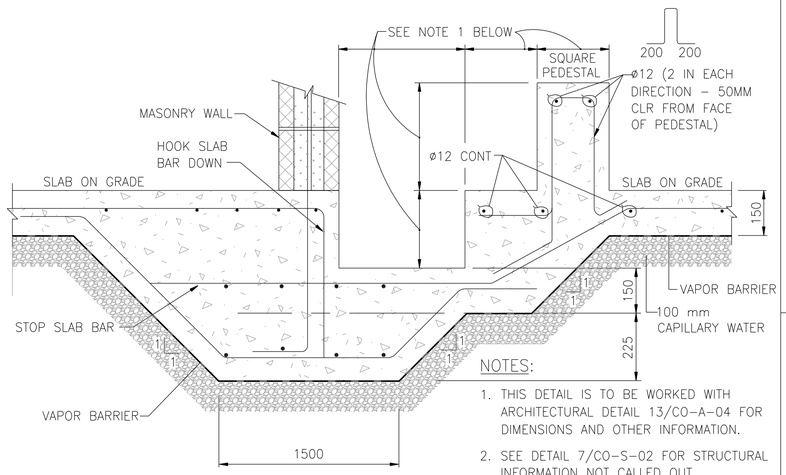

NOTES:

1. THIS DETAIL IS TO BE WORKED WITH ARCHITECTURAL DETAIL 13/CO-A-04 FOR DIMENSIONS AND OTHER INFORMATION.
2. SEE DETAIL 7/CO-S-02 FOR STRUCTURAL INFORMATION NOT CALLED OUT.

8 TYPICAL SECTION AT ABLUTION DRAIN DETAIL

CO-S-04 SCALE: 1:10

NOTE:
SEE DETAIL 7/CO-S-02 FOR INFORMATION NOT CALLED OUT.

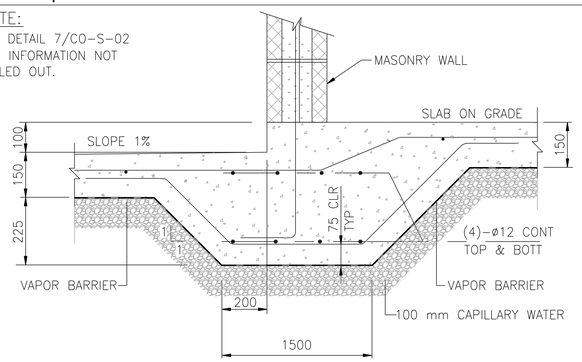

7 DEPRESSED SLAB AT EDGE OF MASONRY WALL

CO-S-04 SCALE: 1:10

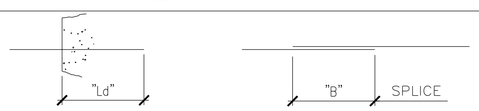

NOTE: $f'c = 280\ Kg/cm^2$ $fy = 4218\ kg/sqcm$

BOTTOM LAYER IN GRADE BEAMS, FOOTINGS, SLABS & VERTICAL WALL BARS									
LENGTH	BAR SIZE	ø10 ø12	ø14	ø16	ø18	ø20	ø22		
"B"	—	610	711	813	889	1020	1125		
"Ld"	—	460	533	610	686	785	865		
TOP LAYER IN GRADE BEAMS, FOOTINGS & HORIZONTAL WALL BARS (TOP BARS)									
LENGTH	BAR SIZE	ø10 ø12	ø14	ø16	ø18	ø20	ø22		
"B"	—	788	914	1041	1168	1300	1430		
"Ld"	—	610	711	813	889	1020	1125		

6 LAP SPLICE & DEVELOPMENT LENGTH IN CONCRETE

CO-S-04 SCALE: N.T.S.

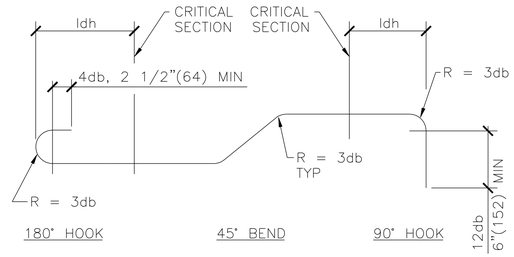

NOTE: "db" = BAR DIAMETER

3 BENDS IN REINFORCING BARS

CO-S-04 SCALE: N.T.S.

LEGEND (FOR REINFORCING SHOWN IN PLAN OR ELEVATION)

- 90° HOOK IN THE PLANE OF THE DRAWING
- 90° BEND PERPENDICULAR TO THE PLANE OF THE DRAWING
- HOOK PERPENDICULAR TO THE PLANE OF THE DRAWING
- 180° HOOK IN THE PLANE OF THE DRAWING
- OFFSET IN THE PLANE OF THE DRAWING

BAR SIZE	ø10	ø12	ø14	ø16	ø18	ø20	ø22
ldh	152	178	203	230	254	310	340

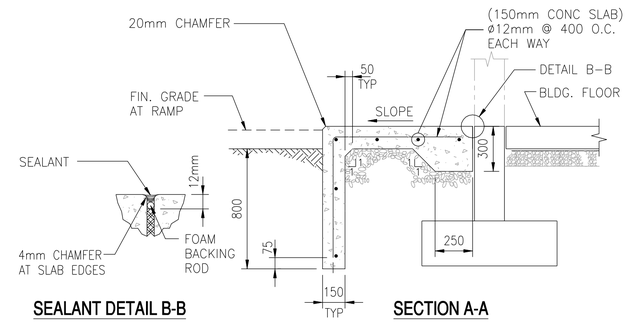

SEALANT DETAIL B-B

SECTION A-A

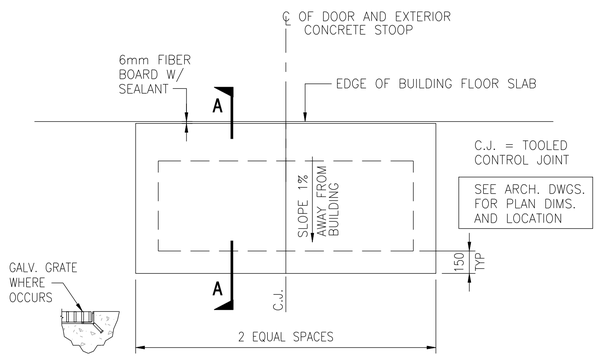

DETAIL D-D

EXTERIOR STOOPS

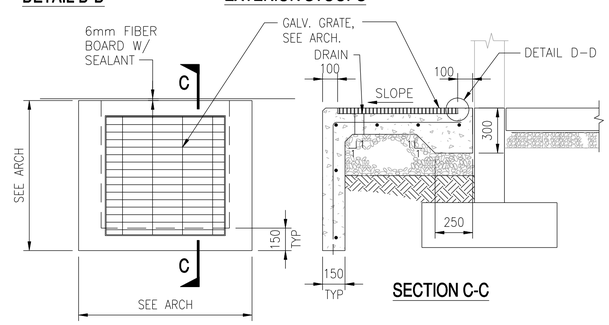

SECTION C-C

EXTERIOR STOOPS @ BARRACKS & HQ BLDG'S ONLY

4 CONCRETE STOOP - RAMP SIM.

CO-S-04 SCALE: 1:20

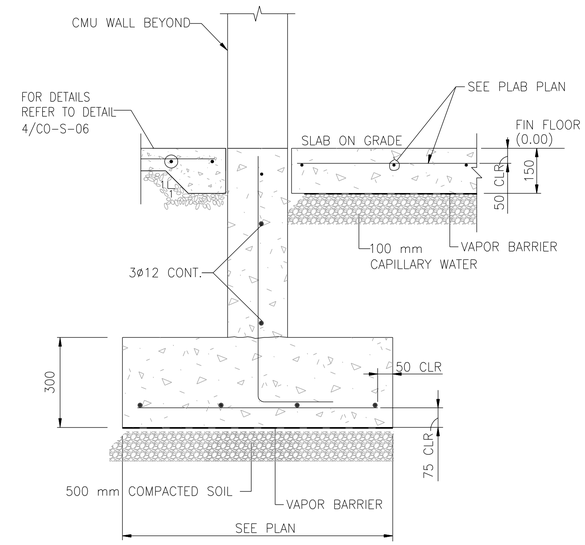

2 SLAB SECTION AT DOOR OPENING

CO-S-04 SCALE: 1:10

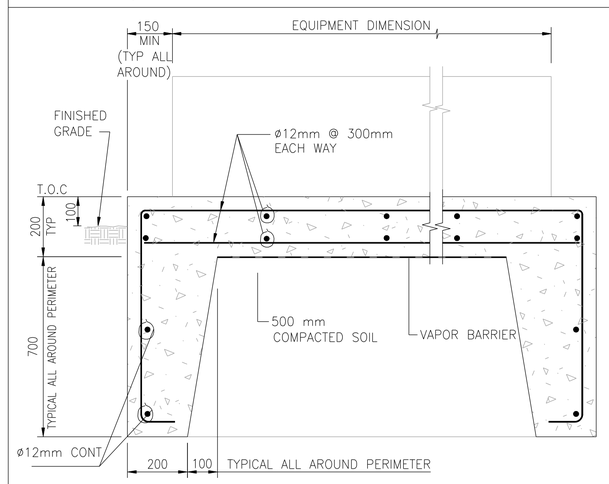

NOTE:
PAD DIMENSIONS, ANCHOR BOLT SIZE AND LOCATIONS, AND OTHER EMBEDDED ITEMS SHALL CONFORM TO EQUIPMENT MANUFACTURER'S REQUIREMENTS.

1 CONCRETE PAD FOR EXTERIOR EQUIPMENT

CO-S-04 SCALE: 1:10

DRAWING NOT TO SCALE

SYMBOL	DESCRIPTION	DATE	APR

DESIGNED BY: TCP
DWN BY: AMG
CHK BY: KGO
DATE: 04-11-07
SUBMITTED BY: CHRISTOPHER J. PANELLO, CHIEF, PROJECTS DEV
FILE NO.: AF0707 CO-S-04

US Army Corps of Engineers Transatlantic Programs Center

ANA REGIONAL BRIGADE
PAKTIKA, AFGHANISTAN

MISCELLANEOUS SECTIONS AND DETAILS

SHEET REFERENCE NUMBER:
CO-S-04

$(getvar, "dwgprefix")$(getvar, "dwgname")$(edtime, 0, MON DD",".YYYY - HH:MMam/pm)

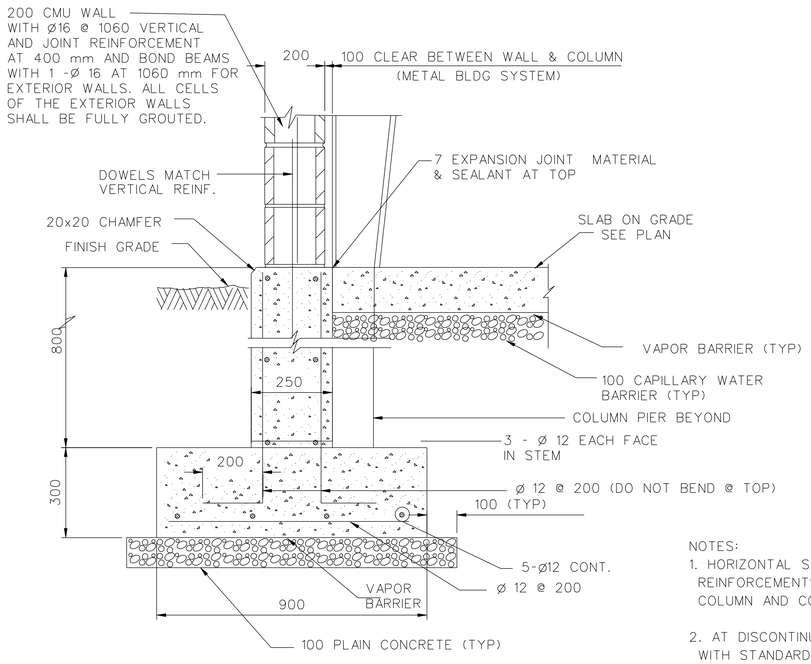

NOTES:

1. HORIZONTAL STEM WALL AND FOOTING REINFORCEMENTS ARE CONTINUOUS THROUGH COLUMN AND COLUMN FOOTING

2. AT DISCONTINUOUS STEM WALL BARS TERMINATE WITH STANDARD HOOK IN COLUMN. FOOTING BARS TERMINATE WITH 600 MM EMBEDMENT IN COLUMN FOOTING.

3. SEE CIVIL DWGS FOR FINAL FLOOR ELEVATION.

1 SECTION AT EXTERIOR WALL FOOTING

CO-S-05 SCALE: N.T.S

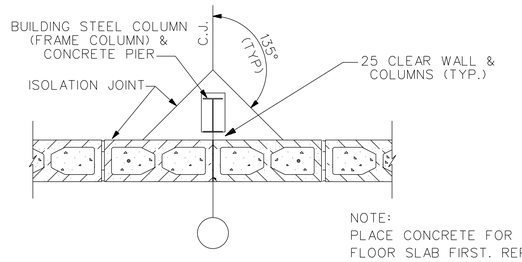

NOTE:
PLACE CONCRETE FOR FLOOR SLAB FIRST. REPLACE FORMWORK FOR ISOLATION JOINT WITH 7 EXPANSION JOINT MATERIAL IMPREGNATED FELT BEFORE CONCRETING AROUND COLUMN

2 DETAIL AT CONTROL JOINTS

CO-S-05 SCALE: N.T.S

DRAWING NOT TO SCALE

SYMBOL	DESCRIPTION	DATE	APR

DESIGNED BY: TCP
DWN BY: AMG
CHK BY: KGO
DATE: 04-11-07
SUBMITTED BY: CHIEF, PANELLO PROJECTS DEV
FILE NO.: AF070TCO-S-05

US Army Corps of Engineers
Transatlantic Programs Center

ANA REGIONAL BRIGADE
PAKTIKA, AFGHANISTAN

FOUNDATION DETAILS FOR METAL BUILDING SYSTEMS

SHEET REFERENCE NUMBER:
CO-S-05

$(getvar, "dwgprefix")$(getvar, "dwgname")$(edtime, 0, MON DD"," YYYY - H:MMam/pm)

GENERAL NOTES:

1. DESIGN REFERENCES:
   A. AMERICAN CONCRETE INSTITUTE (ACI) BUILDING CODE REQUIREMENTS FOR REINFORCED CONCRETE (ACI 318).
   B. AMERICAN WELDING SOCIETY (AWS) STRUCTURAL WELDING CODE – STEEL (AWS D 1.1).
   C. AMERICAN INSTITUTE OF STEEL CONSTRUCTION (AISC) SPECIFICATION FOR STRUCTURAL STEEL BUILDINGS – ALLOWABLE STRESS DESIGN AND PLASTIC DESIGN (AISC SUPPLEMENTAL SPECIFICATIONS S335).
   D. INTERNATIONAL BUILDING CODE (IBC) 2003; PUBLISHED BY INTERNATIONAL CONFERENCE OF BUILDING OFFICIALS.
   E. MBMA – METAL BUILDING SYSTEMS
2. DIMENSIONS ARE SHOWN USING MILLIMETERS. UNLESS OTHERWISE NOTED.
3. CONTRACTOR SHALL VERIFY ALL DIMENSIONS AND CONDITIONS AFFECTING THE WORK AT THE JOB SITE.
4. ALL STRUCTURAL WORK AND MATERIALS SHALL CONFORM TO THE REQUIREMENTS OF THE PROJECT SPECIFICATIONS.
5. DO NOT SCALE DRAWINGS.
6. FOR LOCATION AND DIMENSIONS OF PARTITIONS, DEPRESSIONS, GROOVES, SLEEVES, CURBS, OPENINGS, EMBEDDED OR ATTACHED ITEMS, REFER TO ARCHITECTURAL, MECHANICAL, ELECTRICAL, AND PLUMBING DRAWINGS.
7. FOR ADDITIONAL INFORMATION REFER TO INDIVIDUAL SHEETS FOR EACH STRUCTURE.
8. ALL EXCAVATIONS SHALL BE INSPECTED AND APPROVED BY QUALIFIED GEOTECHNICAL CONSULTANT PRIOR TO PLACING CONCRETE.

STRUCTURAL STEEL NOTES:

1. ALL METAL WORK SHOWN ON DRAWINGS SHALL BE FABRICATED OF STRUCTURAL STEEL UNLESS OTHERWISE NOTED.
2. ALL WELDING SHALL BE IN ACCORDANCE WITH THE APPLICABLE REQUIREMENTS OF THE CURRENT AWS, D1.1, STRUCTURAL WELDING CODE – STEEL, UNLESS NOTED OTHERWISE.
3. WHERE WELD SIZE IS NOT CALLED OUT, USE AISC MINIMUM SIZE.
4. STRUCTURAL STEEL SHALL CONFORM TO THE REQUIREMENTS OF ASTM A500, GRADE B FOR STRUCTURAL TUBING, ASTM A53, GRADE B EXTRA STRONG FOR STEEL PIPE COLUMNS AND ASTM A36 FOR OTHER STRUCTURAL SHAPES (UNLESS OTHERWISE NOTED).
5. SHOP CONNECTIONS MAY BE EITHER BOLTED OR WELDED. ALL FIELD CONNECTIONS SHALL BE BOLTED UNLESS OTHERWISE SHOWN ON THE DRAWINGS.
6. ALL BOLTED CONNECTIONS SHALL BE BEARING TYPE CONNECTIONS MADE WITH 19 DIAMETER BOLTS MEETING REQUIREMENTS OF ASTM A325, TYPE X (UNLESS NOTED OTHERWISE)
7. NO CONNECTION SHALL CONSIST OF LESS THAN 2–19 DIAMETER BOLTS OR A WELD CAPABLE OF RESISTING 2720 KILOGRAMS.
8. ALL ANCHOR BOLTS SHALL BE ASTM A36, EXCEPT AS OTHERWISE NOTED.
9. STRUCTURAL STEEL DESIGN IS BASED ON ALLOWABLE STRESS DESIGN.

LEGENDS AND NOTATIONS: (UNLESS NOTED OTHERWISE)

A. PLATE SIZES ARE GIVEN IN MILLIMETERS. THUS, PL 10 x 200 x 600.
B. ANGLE SIZES ARE GIVEN IN MILLIMETERS, THUS, L100 x 100 x 10 x 600 LG.
C. WELDING NOTATION SIZE, LENGTH AND SPACING ARE GIVEN IN MILLIMETERS WITH SYMBOLS IN ACCORDANCE WITH AWS.
D. BOLT SIZE DIAMETERS ARE GIVEN IN MILLIMETERS. LENGTH IS GIVEN IN MILLIMETERS. THUS, 19 DIA X 300 LG.

SYMBOLS LEGEND

—— - - —— CONTROL JOINT
—— - —— CONSTRUCTION JOINT
— – – — HANDRAIL/GUARDRAIL AS NOTED ON DRAWING

DESIGN LOADS:

SERVICE LOADS

DEAD ———— CALCULATED
REFER TO INDIVIDUAL SHEETS
FLOOR LIVE LOADS ———— 490 kg/m^2
ROOF LIVE LOADS ———— 98 kg/m^2

WIND LOAD

BUILDINGS:
3 SECOND WIND SPEED = 125 KM/HR; EXPOSURE C; IMPORTANCE FACTOR 1.0 UNO

MAXIMUM ALLOWABLE SOIL BEARING PRESSURE

NET ALLOW BEARING CAPACITY = 1.0 kg/m^2

SEISMIC LOAD

BUILDINGS, TANKS, AND EQUIPMENT
SEISMIC DESIGN: IBC 2003
S_S = 1.65g; S_1 = 0.75g; SOIL SITE CLASS D; IMPORTANCE FACTOR 1.0

CONCRETE NOTES:

1. EMBEDDED MATERIAL:
   A. BEFORE PLACING CONCRETE, CARE SHALL BE TAKEN TO INSURE THAT ALL EMBEDDED ITEMS ARE IN POSITION AND SECURELY FASTENED IN PLACE.
   B. ELECTRIC CONDUITS AND PIPING TO BE EMBEDDED IN CONCRETE SHALL MEET THE APPLICABLE REQUIREMENTS OF ACI 318.
2. PROVIDE 25 MILLIMETER CHAMFER FOR ALL EXPOSED EDGES OF COLUMNS, BEAMS, WALLS AND ANY OTHER MEMBERS AS DIRECTED BY THE CONTRACTING OFFICER.
3. JOINTS SHALL BE LOCATED AS SHOWN ON DRAWINGS.
4. A SET OF DRAWINGS SHOWING CONCRETE PLACING SEQUENCE AND LOCATION OF JOINTS SHALL BE SUBMITTED FOR APPROVAL PRIOR TO PREPARATION OF AFFECTED REINFORCING SHOP DRAWINGS.
5. CONSTRUCTION JOINTS FOR STRUCTURAL SLABS, BEAMS AND GIRDERS SHALL BE LOCATED WITHIN THE MIDDLE THIRD OF THEIR SPAN. JOINTS IN GIRDERS SHALL BE OFFSET A MINIMUM DISTANCE OF TWO TIMES THE WIDTH OF AN INTERSECTING BEAM.
6. ALL REINFORCING BARS SHALL BE PLACED IN ACCORDANCE WITH ACI BUILDING CODE (ACI–318).
7. ALL REINFORCING BARS SHALL BE DEFORMED BILLET–STEEL CONFORMING TO ASTM A 615, GRADE 60.
8. DETAILING OF REINFORCEMENT SHALL BE IN ACCORDANCE WITH THE LATEST ACI MANUAL FOR DETAILING (SP–66).
9. DIMENSIONS AND SPACING OF BARS ARE IN MILLIMETERS UNLESS OTHERWISE NOTED. THUS, D20@300.
10. CONCRETE SHALL HAVE A MINIMUM 28 DAY COMPRESSIVE STRENGTH OF 28 MPa (4,000 PSI) UNLESS OTHERWISE NOTED.
11. REINFORCEMENT MAY BE MOVED WITH APPROVAL OF THE ENGINEER TO CLEAR PIPES, SEALS, RECESSES, EMBEDDED METALWORK, AND CONDUITS.
12. REINFORCING BARS SHALL NOT BE BENT OR STRAIGHTENED IN A MANNER THAT WILL INJURE THE MATERIAL. BARS WITH KINKS OR IMPROPER BENDS SHALL NOT BE USED.
13. THE FIRST AND LAST BAR IN SLABS AND WALLS SHALL BE PLACED A MAXIMUM OF ONE–HALF OF THE BAR SPACING SHOWN UNLESS OTHERWISE NOTED.
14. THE CLEAR DISTANCE BETWEEN PARALLEL BARS IN A LAYER SHALL NOT BE LESS THAN THE NOMINAL DIAMETER OF THE BAR, NOR 25 MM. THE CLEAR DISTANCE BETWEEN LONGITUDINAL BARS IN COLUMNS SHALL NOT BE LESS THAN 1.5 TIMES THE NOMINAL BAR DIAMETER NOR 40 MM.
15. PROVIDE SEALANT INDICATED AT ALL CONTROL AND ISOLATION JOINTS. WHERE CONCRETE SLAB WORK WILL NOT BE COVERED BY SOME OTHER FINISH FLOOR MATERIAL PROVIDE TOOLED CONTROL JOINTS HAVING A RADIUS OF 3 MILLMETERS.

CONCRETE COVER FOR REINFORCEMENT

LOCATION	MINIMUM COVER
FORMED OR TOP SURFACES EXPOSED TO WEATHER OR SUBMERGED	
D19 OR LARGER BARS	65
D16 OR SMALLER BARS	55
UNFORMED SURFACES ADJACENT TO EXCAVATION OR IN CONTACT WITH EARTH	100
FORMED IN CONTACT WITH EARTH	75
OTHER LOCATIONS	
BARS IN BEAMS OR GIRDERS, INCLUDING STIRRUPS AND COLUMN SPIRALS OR TIES	40
ELEVATED SLABS, WALLS AND JOISTS	20
STIRRUPS IN GRADE BEAMS	65

DRAWING NOT TO SCALE

SYMBOL	DESCRIPTION	DATE	APR

DESIGNED BY: TCP
DWN BY: AMG
CHK BY: KGO
DATE: 04-11-07
SUBMITTED BY: CHIEF, PDT PANELLO PACIFICS DEV
FILE NO.: AF0707 C0-S-06

US Army Corps of Engineers Transatlantic Programs Center

ANA REGIONAL BRIGADE
PAKTIKA, AFGHANISTAN

STANDARD DETAILS
STRUCTURAL NOTES

SHEET REFERENCE NUMBER:
C0-S-06

$(getvar, "dwgprefix")$(getvar, "dwgname")$(edtime, 0, MON DD"", YYYY – HH:MMam/pm)

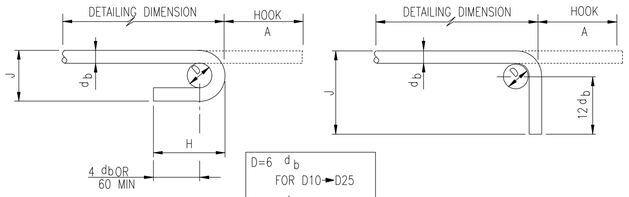

D=6 d_b
FOR D10 → D25

D=8 d_b
FOR D29 → D36

d_b = BAR DIA

SIZES OF 180° HOOK			
BAR SIZE	A	J	APPROX H
D10	130	80	100
D12	150	100	110
D16	180	130	130
D20	200	150	160
D22	250	180	180
D25	280	200	200
D29	380	290	240
D32	430	340	260
D36	480	375	290

SIZES OF 90° HOOK		
BAR SIZE	A	J
D10	140	160
D12	190	220
D16	230	270
D20	270	320
D22	320	370
D25	370	430
D29	420	480
D32	470	580
D36	520	610

FILLET WELD STRENGTH *	
SIZE (mm)	STRENGTH (KN/mm)
3	0.326
5	0.487
6	0.650
8	0.813
10	0.975
11	1.138
13	1.299
14	1.462

* AWS A5.1 OR A5.5 E70 XX ELECTRODES FOR A36 MATCHING BASE MATERIAL

1 BAR BENDING DETAILS
SS-2 SCALE: NONE

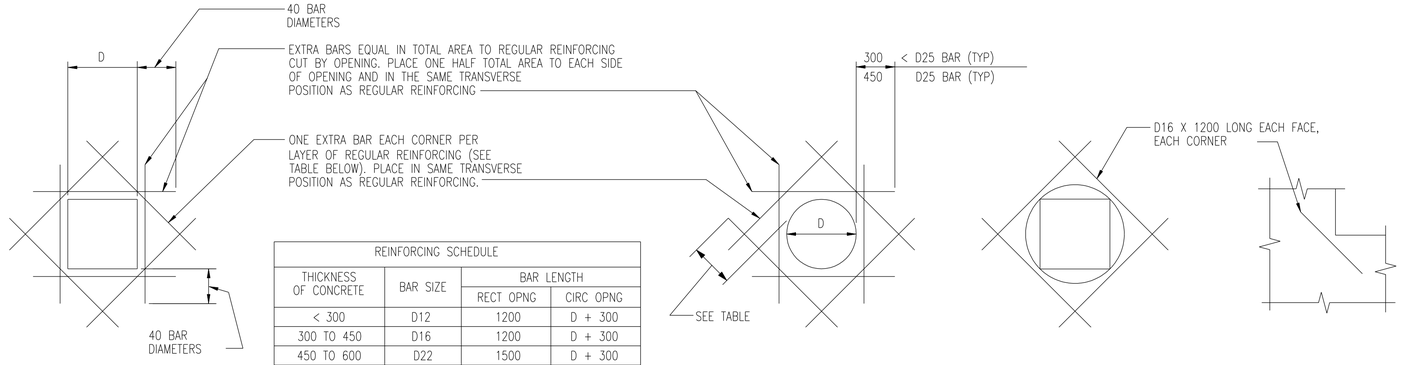

REINFORCING SCHEDULE			
THICKNESS OF CONCRETE	BAR SIZE	BAR LENGTH	
		RECT OPNG	CIRC OPNG
< 300	D12	1200	D + 300
300 TO 450	D16	1200	D + 300
450 TO 600	D22	1500	D + 300
> 600	D25	1800	D + 450

RECTANGULAR OPENINGS

CIRCULAR OPENINGS

FOR OPENINGS 500 AND SMALLER IN DIAMETER OR DIAGONAL

ISOLATED RE-ENTRANT CORNERS

FOR OPENING LARGER THAN 500 IN DIAMETER OR DIAGONAL

2 TYPICAL EXTRA REINFORCING AT OPENINGS IN WALLS AND SLABS
SS-2 SCALE: NONE

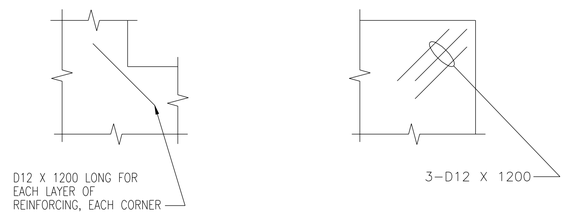

RE-ENTRANT CORNERS

EXTERIOR CORNERS

3 TYPICAL EXTRA REINFORCING IN SLABS ON GRADE
SS-2 SCALE: NONE

DRAWING NOT TO SCALE

SYMBOL	DESCRIPTION	DATE	APR

DESIGNED BY: TCP
DWN BY: AMG
CHK BY: KGO
DATE: 04-11-07
SUBMITTED BY: CHIEF, PANELLO PROJECTS DEV
FILE NO.: AF0707 CO-S-07

US Army Corps of Engineers Transatlantic Programs Center

ANA REGIONAL BRIGADE
PAKTIKA, AFGHANISTAN

STANDARD DETAILS

STRUCTURAL DETAILS SHEET 1

SHEET REFERENCE NUMBER:
CO-S-07

$(getvar, "dwgprefix")$(getvar, "dwgname")$(edtime, 0, MON DD"," YYYY - H:MMam/pm)

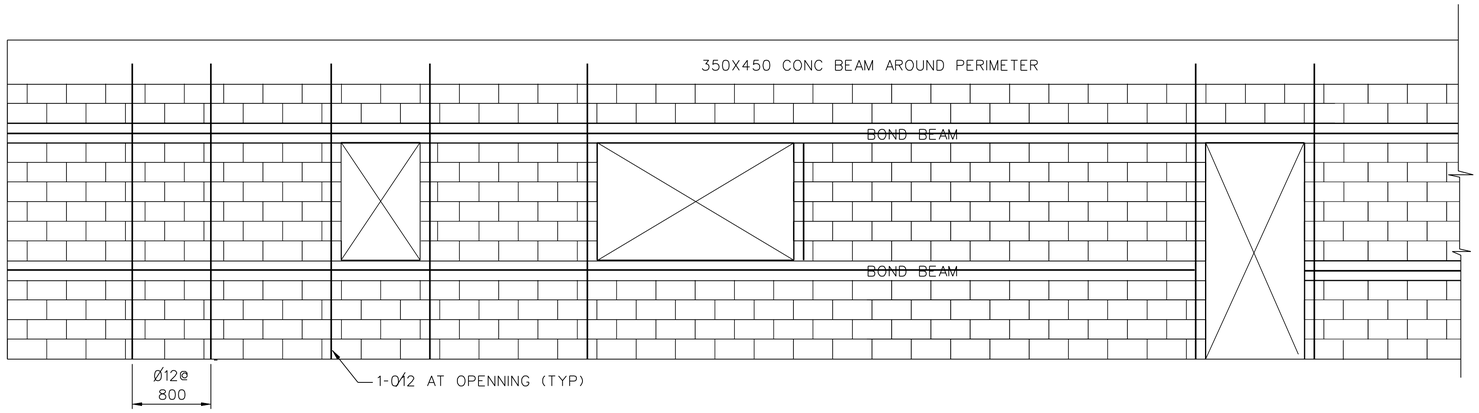

TYPICAL EXTERIOR BLOCK (CMU) WALL ELEVATIONS

*SEE DETAIL ON SHEET CO-S-03/SECTION 1

MASONRY NOTES:

1. WORK THIS SHEET WITH ARCHITECTURAL SHEETS AND SPECIFICATION SECTION 04200.
2. PROVIDE JOINT REINFORCEMENT AT A MAXIMUM SPACING OF 400 MILLIMETERS ON CENTERS.
3. IN ADDITION TO JOINT REINFORCEMENT IDENTIFIED FOR PLACEMENT IN NOTE 2 ABOVE, PROVIDE JOINT REINFORCEMENT ADJACENT TO SILLS AND HEADS OF ALL OPENINGS HAVING A MASONRY WIDTH GREATER THAN 1.60 METERS. EXTEND (OR OTHERWISE ANCHOR) SUCH REINFORCEMENT A MINIMUM OF 600 MILLIMETERS BEYOND EACH FACE OF OPENING.
4. BOND BEAMS SHALL BE PROVIDED IN BOTH EXTERIOR AND INTERIOR WALLS AT A MAXIMUM SPACING OF _____ METERS AND/OR AS SHOWN. REINFORCE BOND BEAMS WITH __Ø__ REBAR UNLESS OTHERWISE NOTED.
5. DISCONTINUE BOND BEAM AND JOINT REINFORCEMENT AT MASONRY CONTROL JOINTS UNLESS OTHERWISE NOTED.
6. UNLESS NOTED OTHERWISE PROVIDE A MINIMUM OF 2-Ø 12 REBAR IN LINTEL BEAMS SPANNING MASONRY OPENINGS HAVING A WIDTH GREATER THAN ONE METER. EXTEND (OR OTHERWISE ANCHOR) SUCH REINFORCEMENT A MINIMUM OF 600 MILLIMETERS BEYOND EACH FACE OF OPENING.
7. WHERE REINFORCEMENT FOR A BOND BEAM AND LINTEL ARE ALIGNED WITHIN A MASONRY COURSING EXTEND (OR OTHERWISE ANCHOR) REBAR FOR THE LINTEL A MINIMUM OF 600 MILLIMETERS BEYOND EACH FACE OF OPENING.
8. PROVIDE A MASONRY BOND TO INTERSECTING LOAD-BEARING WALLS AT CORNERS ONLY. WHERE A LOAD-BEARING WALL TERMINATES AT THE FACE OF ANOTHER LOAD-BEARING WALL, PROVIDE A CONTROL JOINT. FOR LATERAL SUPPORT BETWEEN SUCH WALLS PROVIDE STEEL TIE BARS, SPACED NOT MORE THAN 800mm ON CENTER VERTICALLY.
9. PROVIDE A MASONRY BOND TO INTERSECTING NON LOAD-BEARING WALLS OR PARTITIONS AT CORNERS ONLY. WHERE NON LOAD-BEARING WALLS OR PARTITIONS TERMINATE AT THE FACE OF ANOTHER WALL OR PARTITION PROVIDE A CONTROL JOINT. FOR LATERAL SUPPORT BETWEEN SUCH WALLS OR PARTITIONS PROVIDE STRIPS OF METAL LATH OR ONE-QUARTER INCH MESH SPACED NOT MORE THAN 400mm ON CENTER VERTICALLY.
10. PROVIDE MASONRY CONTROL JOINT LOCATIONS WITHOUT CUTTING BLOCKS
11. IN ADDITION TO THE VERTICAL REINFORCEMENT INDICATED ON WALL DETAILS FOR PLACEMENT, PROVIDE 1 - Ø12 REBAR ADJACENT TO SIDES OF MASONRY OPENINGS.
12. CMU BLOCK DETAILS SHALL MATCH DETAILING OF EXISTING BUILDINGS ON SITE.

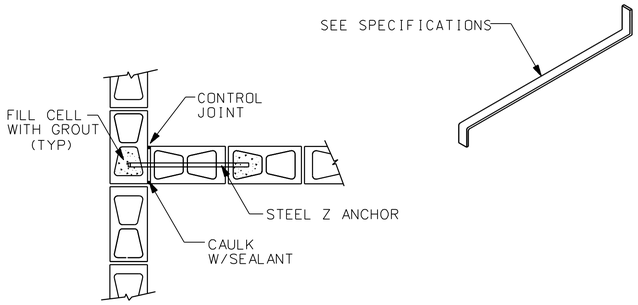

INTERSECTION OF WALLS OR PARTITIONS

SEE NOTES 8 AND 9

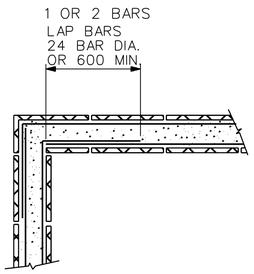

DETAIL OF BOND BEAM REINFORCING SPLICE AT CORNER

N.T.S.

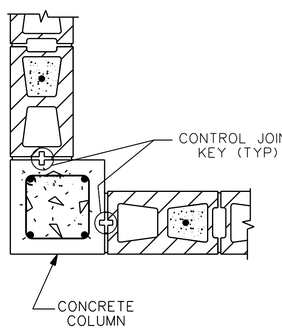

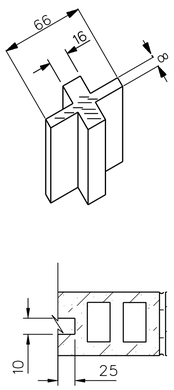

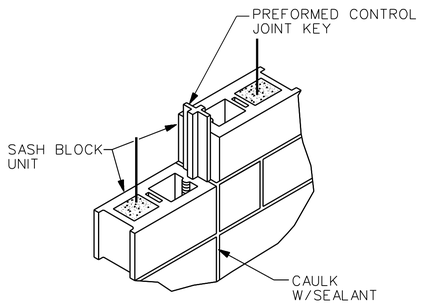

DETAIL B

N.T.S.

MASONRY CONTROL JOINT DETAILS

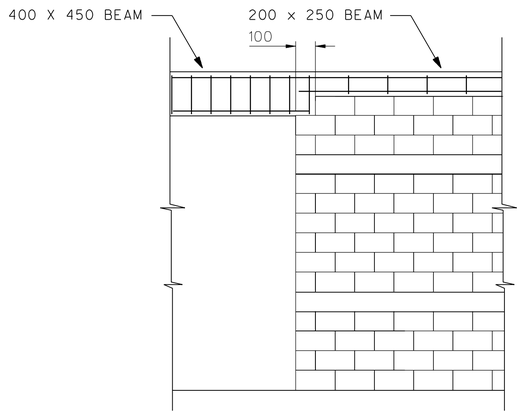

1 CAP BEAM TO BEAM OVER CMU WALL
CO-S-08 SCALE: N.T.S

DESIGNED BY: TCP
DATE:
DWN. BY: AMG
CHK. BY: KGO
SUBMITTED BY: PHILIP J. DINELLO PROJECT ARCHITECT DEV
FILE NO.: AF0707 CO-S-08

US Army Corps of Engineers Transatlantic Programs Center

ANA REGIONAL BRIGADE
PAKTIKA, AFGHANISTAN

STANDARD DETAILS
STRUCTURAL DETAILS

SHEET REFERENCE NUMBER:
CO-S-08

SYMBOL	DESCRIPTION	DATE	APR

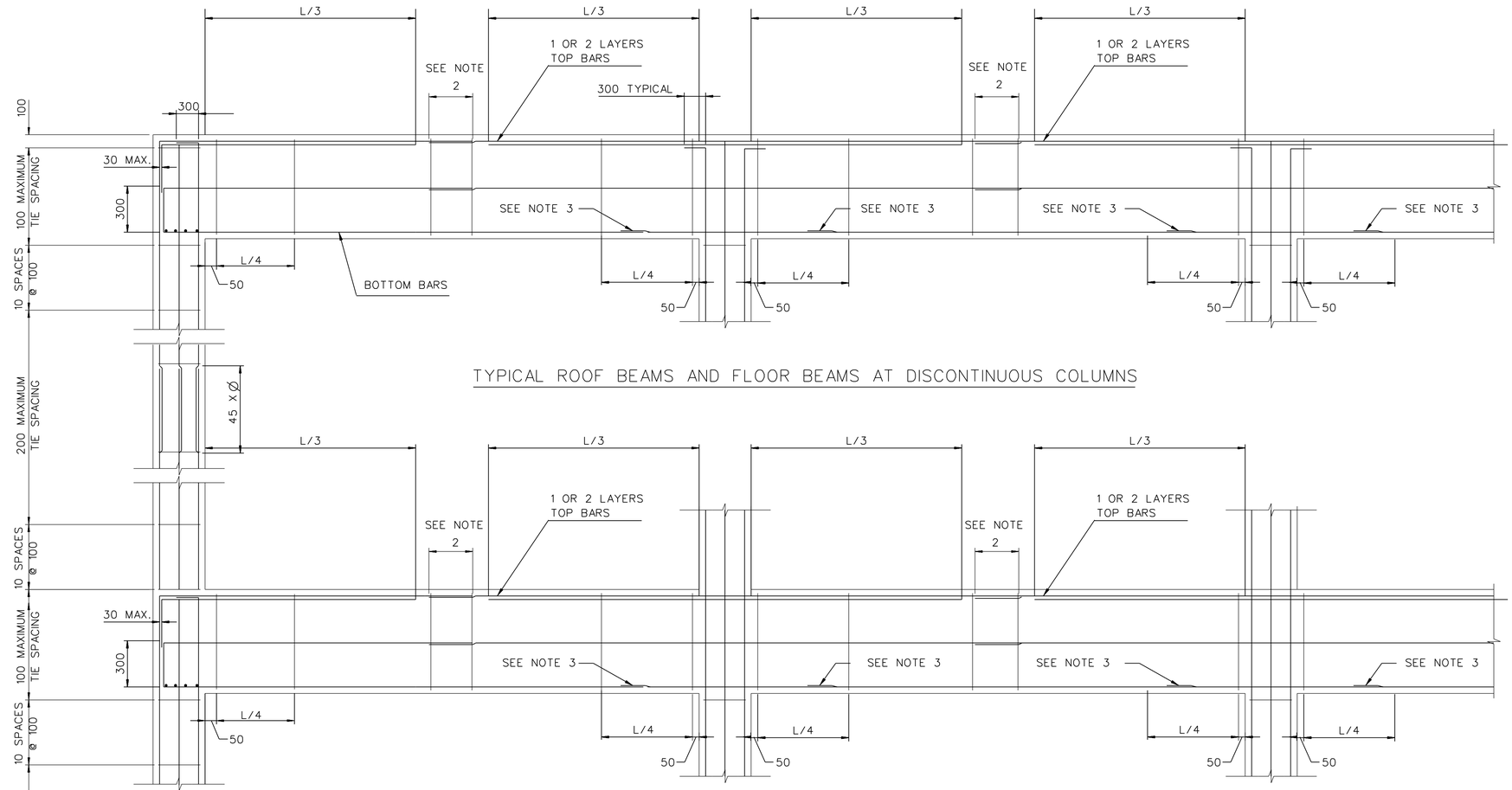

TYPICAL ROOF BEAMS AND FLOOR BEAMS AT DISCONTINUOUS COLUMNS

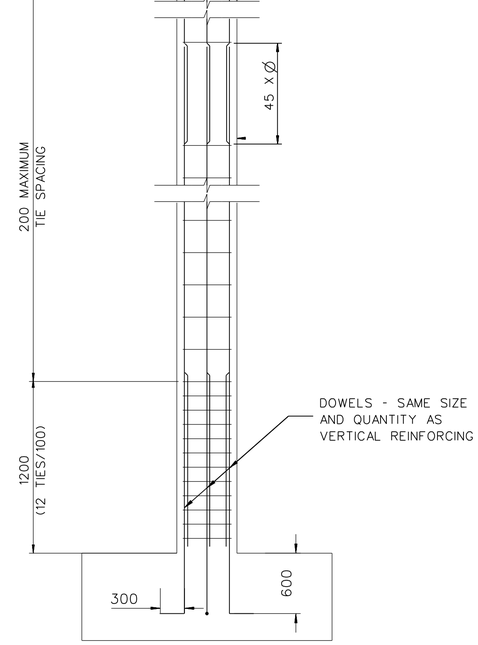

TYPICAL FLOOR BEAMS

NOTES:

1. ALL LAP SPLICES SHALL BE 42 X DIAMETER OF REINFORCING BAR UNLESS OTHERWISE NOTED.

2. PROVIDE A 150mm MAXIMUM OF STIRRUP SPACING AT LAP SPLICES, AS SHOWN ON DRAWING. IAP SPLICES NOTED SHALL OCCUR AT MIDSPAN.

3. THE LAP SPLICES SHOWN SHALL BE PERMITTED IN SPANS MEASURING 6 METERS OR MORE FROM CENTERLINES OF SUPPORTS (COLUMNS OR WALLS) ONLY. SPLICES INDICATED SHALL BE LOCATED ONE METER FROM THE FACE OF THE COLUMN, AS SHOWN. SPLICE. SPLICE LENGHT SHALL NOT BE LESS THAN 42 X BAR DIAMETER.

4. BEAM STEEL NOT SHOWN FOR CLARITY.

ALL COLUMN TIES ARE Ø 12

STANDARD BEAM, SLAB AND COLUMN DETAIL

UNLESS OTHERWISE NOTED, LINEAR DIMENSIONS SHOWN ARE IN MILLIMETERS.

SYMBOL	DESCRIPTION	DATE	APR

DESIGNED BY: TCP
DATE: 06-27-07
DWN BY: AMG
SUBMITTED BY: PHILIP L. DINELLO, CHIEF, PDT FACILITIES DEV.
CHK BY: KGO
FILE NO.: AF0707 CO-S-09

US Army Corps of Engineers Transatlantic Programs Center

ANA REGIONAL BRIGADE
PAKTIKA, AFGHANISTAN
STANDARD DETAILS
BEAM, SLAB AND COLUMN DETAIL

SHEET REFERENCE NUMBER:
CO-S-09

6/26/2007
h:\Projects\Afghanistan\af0707\general\str\CO-S-09.dwg

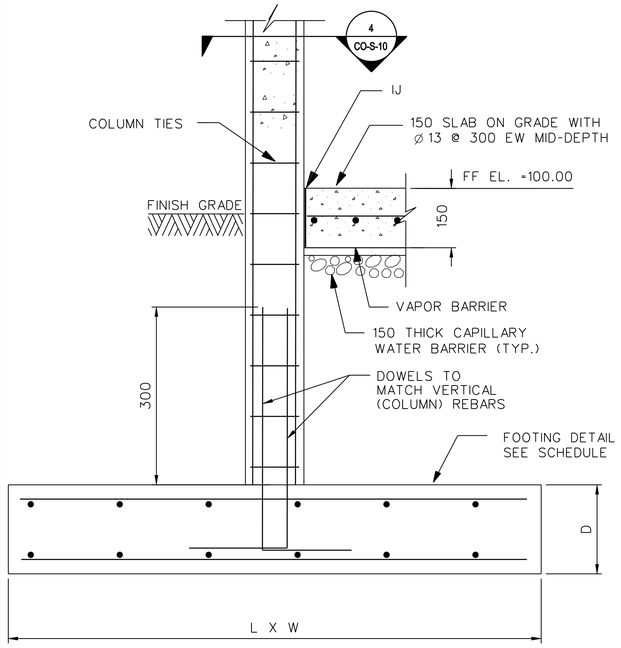

NOTE: REFER TO INDIVIDUAL FACILITY PLANS FOR FOOTING DETAILS.

1 COLUMN & COLUMN FOOTING SECTION

CO-S-10 SCALE: 1:10

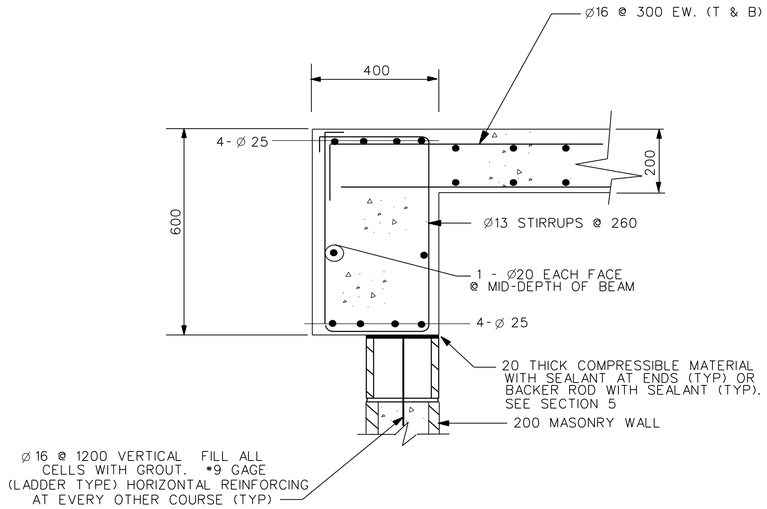

BEAM RB2

2 BEAM SECTION

CO-S-10 SCALE: 1:10

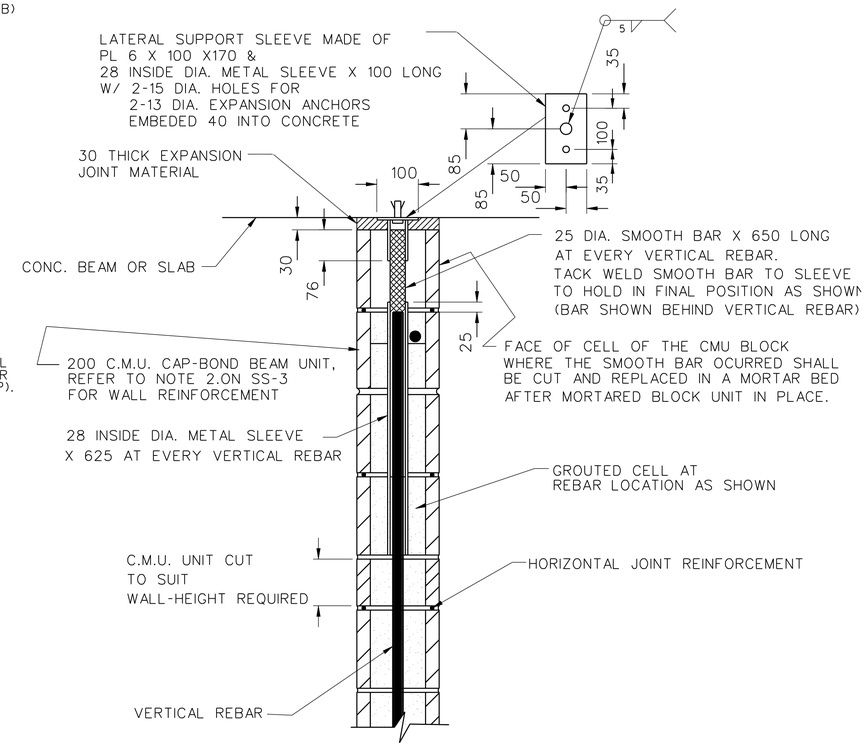

5 TOP LATERAL SUPPORT FOR C.M.U. WALLS

CO-S-10 SCALE: 1:10

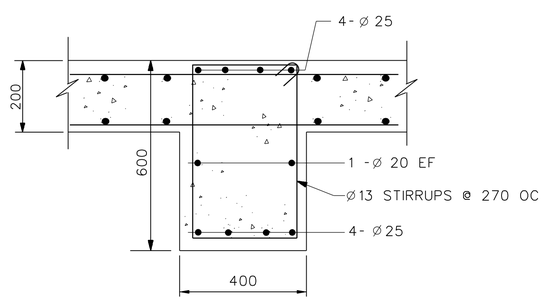

BEAM RB1

3 BEAM SECTION

CO-S-10 SCALE: 1:10

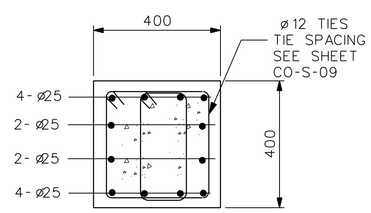

C1 (TYP)

4 COLUMN SECTION

CO-S-10 SCALE: 1:10

0 .50 1.00
1:10

SYMBOL	DESCRIPTION	DATE	APR

DESIGNED BY: TCP
DATE: 06-27-07
DWN BY: TCP
SUBMITTED BY: PHILIP L. DINELLO, CHIEF, PDT FACILITIES DEV.
CHK BY: KGO
FILE NO.: AF0707 CO-S-10

US Army Corps of Engineers Transatlantic Programs Center

ANA REGIONAL BRIGADE
PAKTIKA, AFGHANISTAN

STANDARD DETAILS

BEAM AND COLUMN SECTIONS

SHEET REFERENCE NUMBER:
CO-S-10

6/26/2007
h:\projects\afghanistan\af0707\general\str\CO-S-10.dwg

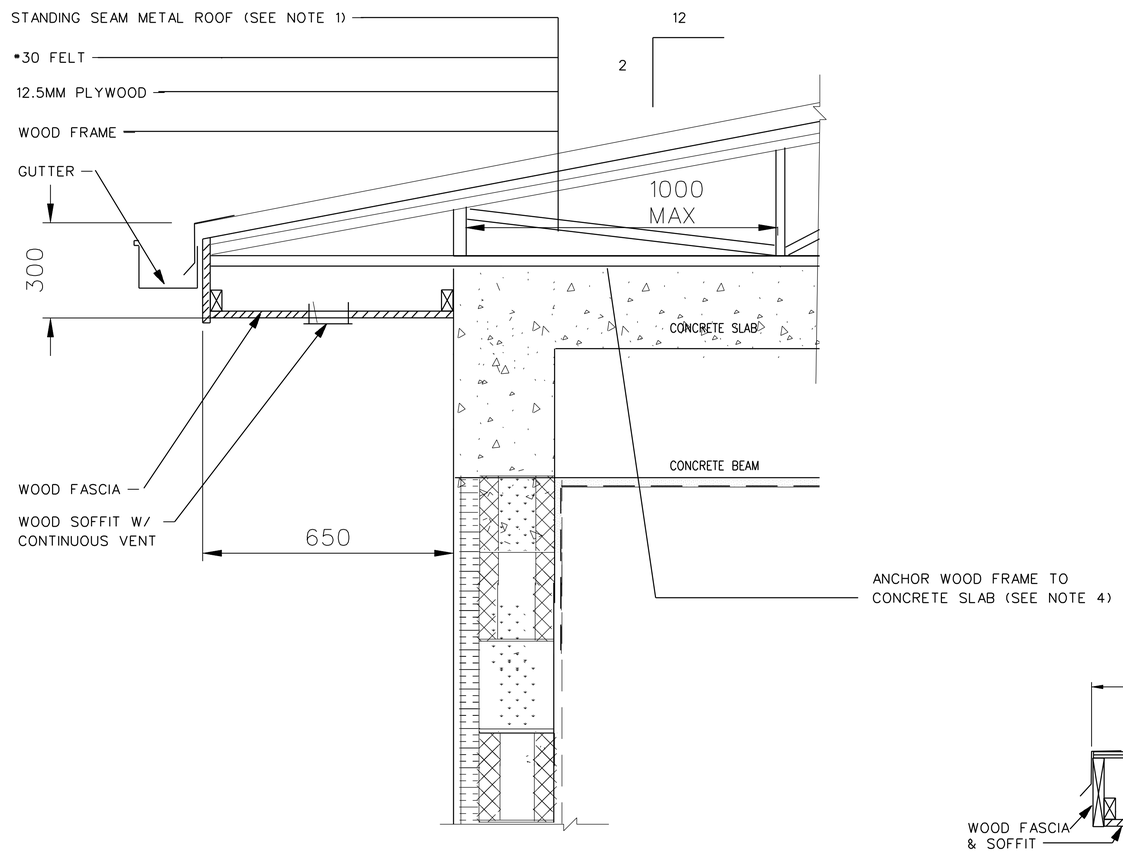

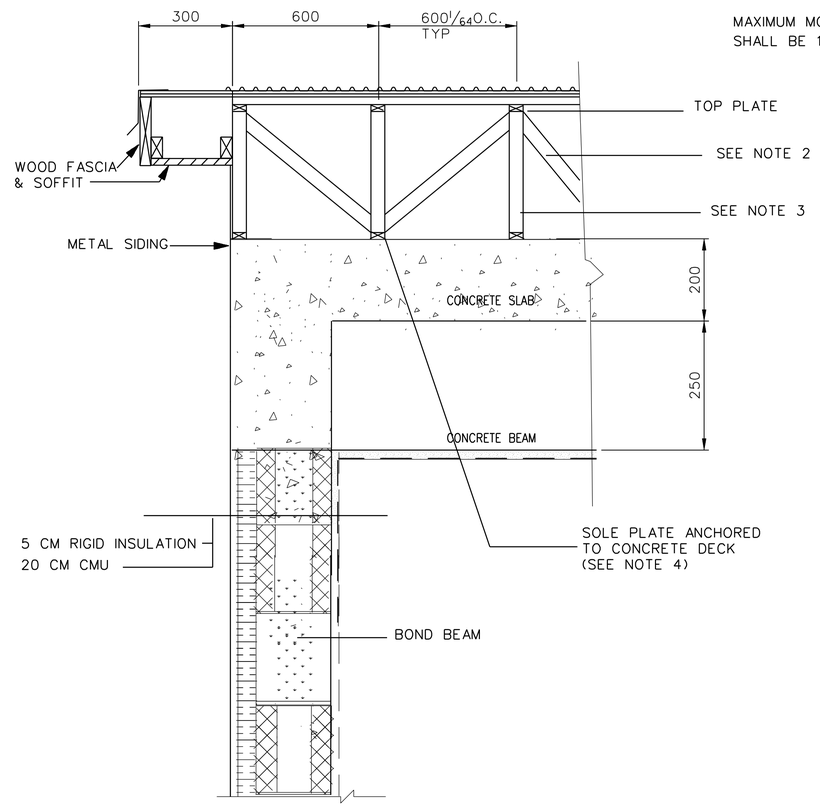

GENERAL NOTES:

1. ANCHOR FRAME SOLE TO ROOF CONC. SLAB USING POWDER-ACTUATE FASTENERS WITH 0.145 MM SHANK DIAMETER AND MINIMUM 32 MM CONCRETE PENETRATION SPACED @ 450 O.C. MAX.

2. 50X100 WOOD BRACES @ 2000 O.C. MAX. (TYP.) ALONG WOOD FRAMES USE 3-8d NAILS FOR CONNECTION AT EACH END TO STUD PLATES

3. STUD PLATE USE 2-16d NAILS FOR CONNECTION AT EACH END TO SOLE AND TOP PLATES. WOOD FRAMES RUNNING PARALLEL TO ROOF SLOPE.

4. SOLE PLATE -
ANCHOR FRAME SOLE TO ROOF CONC. SLAB USING POWDER-ACTUATE FASTENERS WITH 0.145MM SHANK DIAMETER AND MINIMUM 32 MM CONCRETE PENTRATION SPACED @ 450 O.C. MAX.

5. ALL WOOD MEMBERS SHALL PROVIDE A MINIMUM ALLOWABLE STRESS AND PROPERTIES FOR NORMAL DURATION OF LOAD, SINGLE MEMBER USE OF:

EXTREME FIBER IN BENDING Fb= 7239 KPa (1050 PSI)
HORIZONTAL SHEAR Fv= 517 KPa (75 PSI)
TENSION PARALLEL TO GRAIN Ft= 4826 KPa (700 PSI)
COMPRESSION PARALLEL TO GRAIN Fc= 6205 KPa (900 PSI)
MODULUS OF ELASTICITY E= 8,963,000 KPA (1,300,000 PSI)

MAXIMUM MOISTURE CONTENT OF ALL WOOD MEMBERS SHALL BE 19% AT THE TIME OF DELIVERY TO THE JOB SITE.

SYMBOL	DESCRIPTION	DATE	APR

DESIGNED BY: RG
DATE: 06-27-07
DWN BY: TCP
SUBMITTED BY: PHILIP L. DINELLO, CHIEF, PDT PACKETS DEM
CHK BY: KGO
FILE NO.: AF0707 CO-S-11

US Army Corps of Engineers
Transatlantic Programs Center

ANA REGIONAL BRIGADE
PAKTIKA, AFGHANISTAN

STANDARD DETAILS
WOOD ROOF STRUCTURE

SHEET REFERENCE NUMBER:
CO-S-11

6/26/2007
h:\projects\afghanistan\af0707\general\str\CO-S-11.dwg

MATERIAL: MALLEABLE IRON
STANDARD FINISH: PLAIN OR ELECTRO-PLATED
SERVICE: DESIGNED FOR ATTACHING a HANGER ROD TO THE BOTTOM FLANGE OF a Z-PURLIN.
WEIGHT: Wt./C 90 lbs. (40.8kg)
DESIGN LOAD: 500 lbs. (2.22kn)
APPROVALS: UNDERWRITERS LABORATORIES LISTED COMPLIES WITH FEDERAL SPECIFICATION WW-H-171E TYPE 23 AND MANUFACTURERS STANDARDIZATION SOCIETY SP-69 & SP-58 TYPE 19.

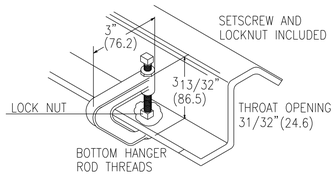

DETAIL A

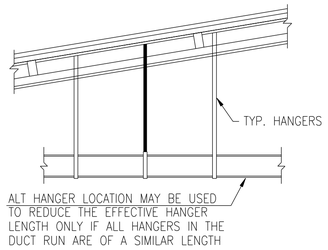

DETAIL B

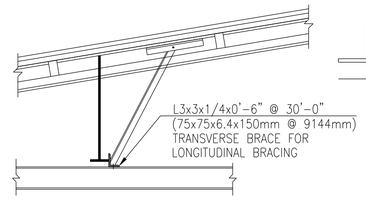

DETAIL C

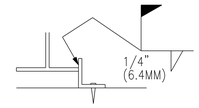

DETAIL D

TRAPEZE HANGER SCHEDULE TABLE				
DUCT LARGEST SIZE MM		HANGER SPACING (MM) MAX.	STEEL ANGLE SIZE (MM)	THREADED ROD SIZE (MM)
UP	TO 457.2	3048	38 x 38 x 3.2	13
483	TO 1067	3048	38 x 38 x 3.2	13
1092.2	TO 1524	3048	51 x 51 x 3.2	13
1549.4	TO 2134	2438	51 x 51 x 5	13
2159	TO 2438.4	2438	51 x 51 x 5	13
2464	TO 3048	2438	64 x 64 x 5	13

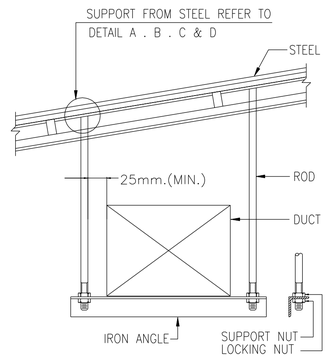

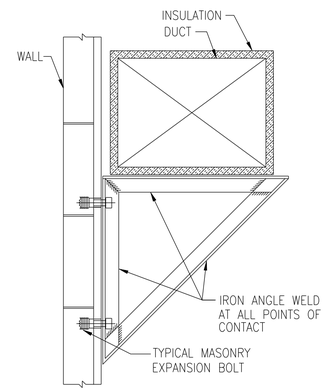

WALL SUPPORT

1 TRAPEZE SUPPORT DETAIL

CO-M-01 SCALE: N.T.S

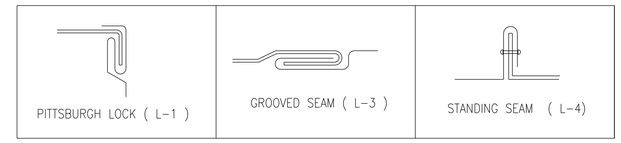

LONGITUDINAL JOINTS

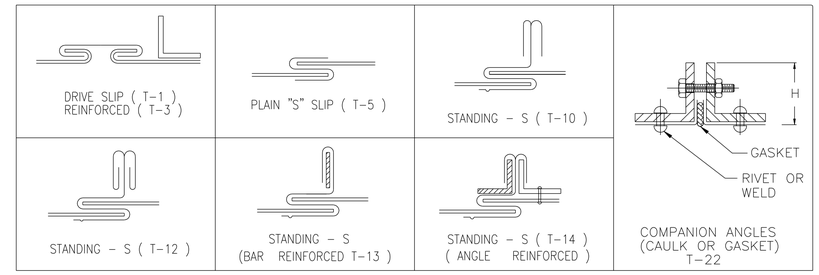

TRANSVERSE JOINTS

2 DUCTWORK JOINTS DETAIL

CO-M-01 SCALE: N.T.S

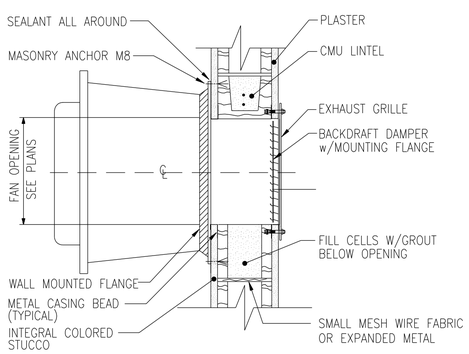

NOTES:-

* GASKET MATERIAL TO BE PROVIDED TO BOTTOM OF FAN INSIDE MOUNTING ANGLES.

3 WALL MOUNTED EXHAUST FAN INSTALLATION DETAIL

CO-M-01 SCALE: N.T.S

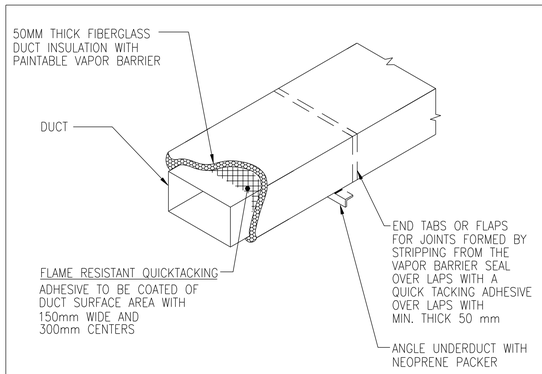

NOTES :-

1- INSTALL MECHANICAL FASTENER WITH SELF LOCKING WASHER AT BOTTOM OF DUCT FOR DUCT SIZE 600 mm AND LARGER
2- INSTALL MECHANICAL FASTENER WITH SELF LOCKING WASHER AT ALL SIDES OF DUCT ON RISERS

4 DUCT INSULATION AND HANGER DETAIL

CO-M-01 SCALE: N.T.S

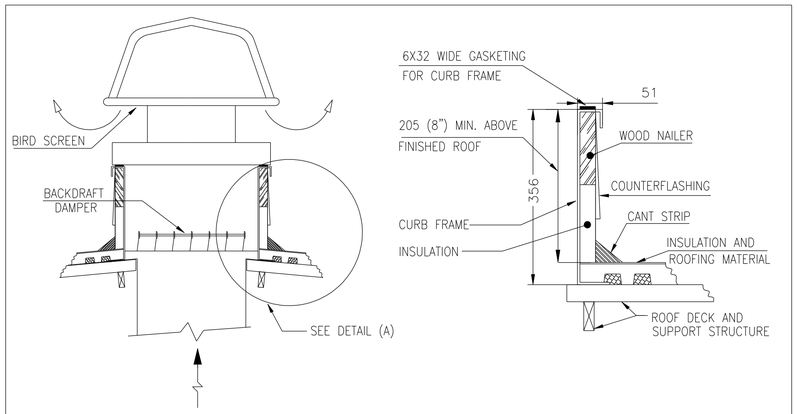

EXHAUST HOOD

CURB DETAIL A

5 ROOF MOUNTED EXHAUST FAN DETAIL

CO-M-01 SCALE: N.T.S

SYMBOL	DESCRIPTION	DATE	APR

DESIGNED BY: F.MAMDOH
DATE: 04-11-07
DWN BY: A.LATIF
SUBMITTED BY: PHILIP J. PANELLO Chief, Pol Facilities Dev
CHK BY: A.MAKRAM
FILE NO.: AF0707CO-M-01

US Army Corps of Engineers Transatlantic Programs Center

ANA REGIONAL BRIGADE
PAKTIKA, AFGHANISTAN

STANDARD DETAILS

STANDARD MECHANICAL DETAILS

SHEET REFERENCE NUMBER:
CO-M-01

$(getvar, "dwgprefix")$(getvar, "dwgname")$(edtime, 0, MON DD",." YYYY - H:MMam/pm)

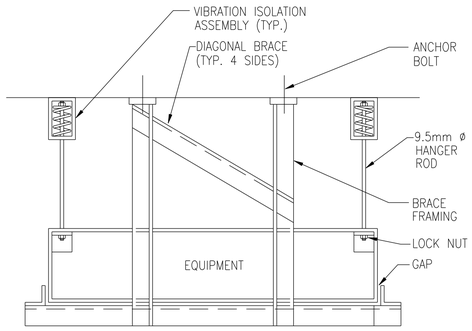

MAX. WEIGHT 227 KG

1 EQUIPMENT SUPPORT DETAIL

CO-M-02 SCALE: N.T.S

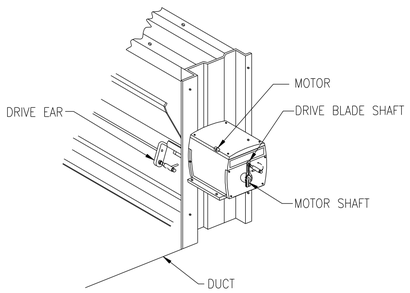

2 MOTORIZED VOLUME DAMPER DETAIL

CO-M-02 SCALE: N.T.S

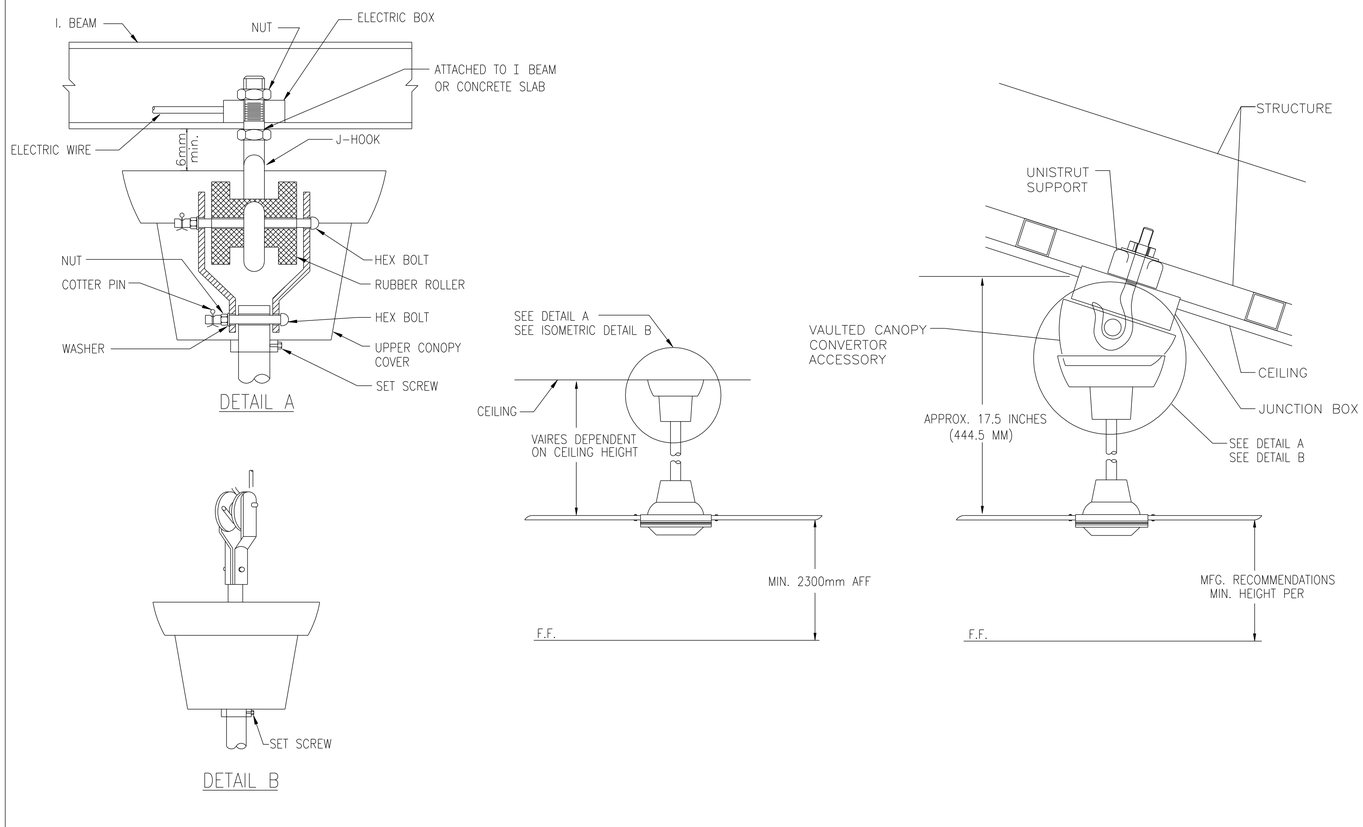

3 CEILING FAN MOUNTING DETAILS

CO-M-02 SCALE: N.T.S

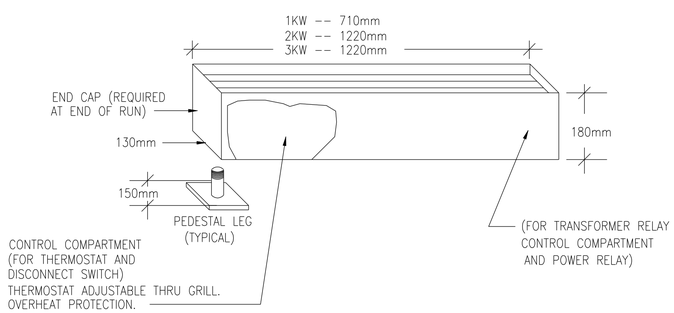

4 ELECTRIC BASEBOARD HEATER DETAIL (BH)

CO-M-02 SCALE: N.T.S

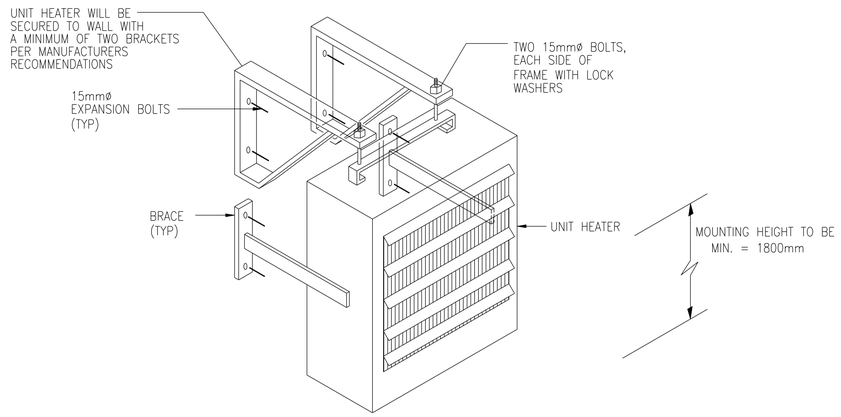

5 ELECTRIC WALL MOUNTED UNIT HEATER DETAIL

CO-M-02 SCALE: N.T.S

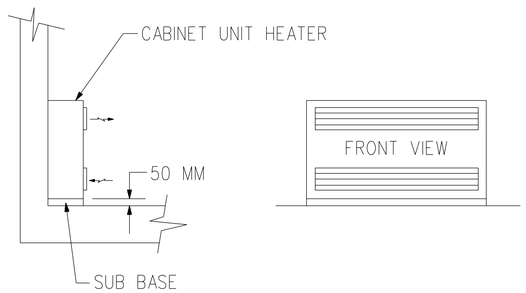

6 CABINET UNIT HEATER

CO-M-02 SCALE: N.T.S

SYMBOL	DESCRIPTION	DATE	APR

DESIGNED BY: F.MAMOOH
DATE: 04-11-07
DWN BY: A.LATIF
SUBMITTED BY: SYED ENAYATULLA CHIEF, PROJ. BLDG SYSTEMS
CHK BY: A.MAKRAM
FILE NO.: AF070TCO-M-02

US Army Corps of Engineers Transatlantic Programs Center

ANA REGIONAL BRIGADE
PAKTIKA, AFGHANISTAN

STANDARD DETAILS

SHEET REFERENCE NUMBER:
CO-M-02

$(getvar, "dwgprefix")$(getvar, "dwgname")$(edtime, 0, MON DD",", YYYY - HH:MMam/pm)

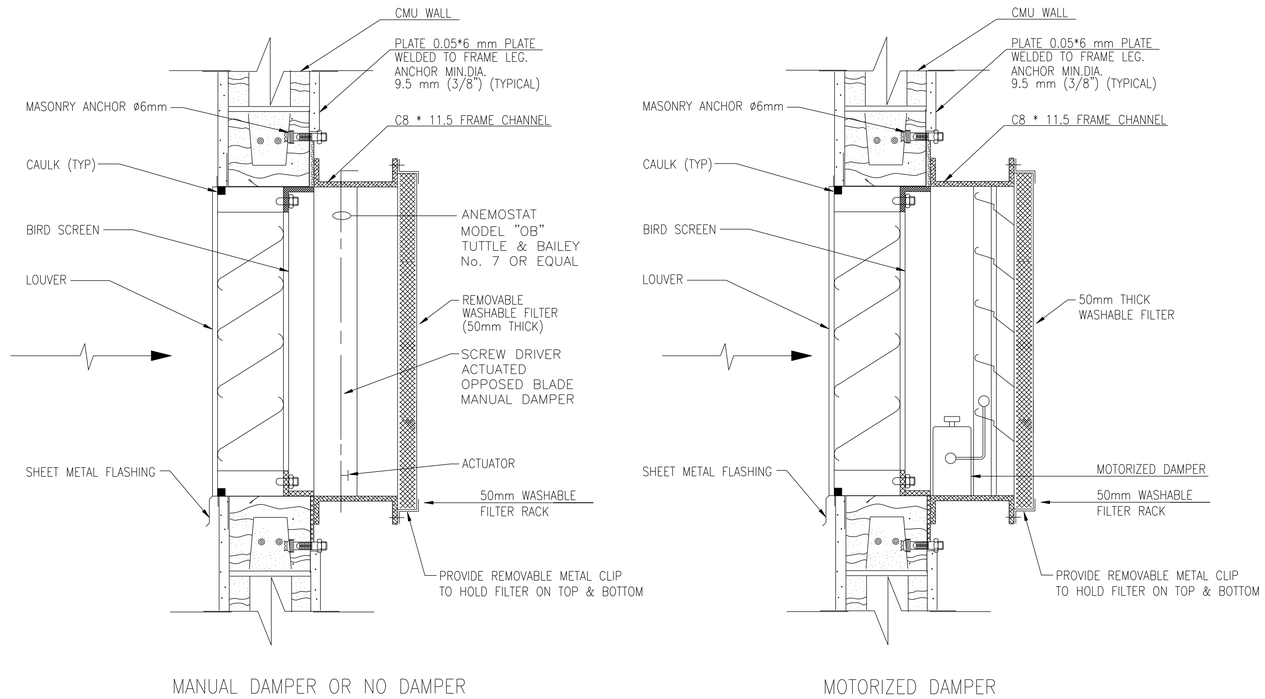

1 WASHABLE FILTER LOUVER DETAILS

CO-M-03 SCALE: N.T.S

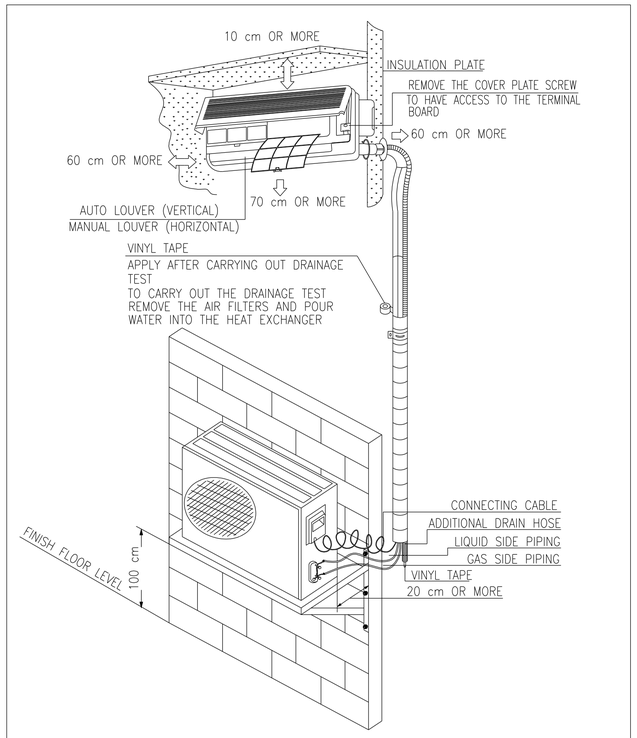

2 SPLIT UNIT INSTALLATION

CO-M-03 SCALE: N.T.S

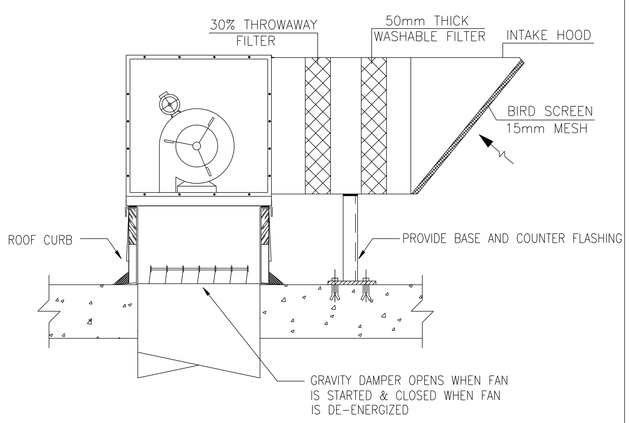

3 SUPPLY FAN DETAIL

CO-M-03 SCALE: N.T.S

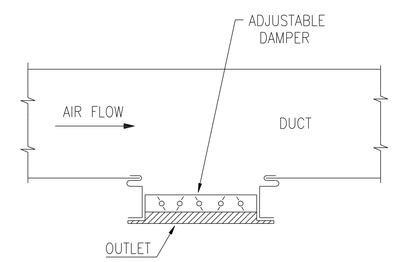

GRIDS AND DAMPERS MUST NOT DAMAGE LINERS

NOTE:
REGISTER AND DIFFUSER CONTAIN VOLUME CONTROL AT FACE. GRILLE HAS NO VOLUME CONTROL.

4 DIFFUSER, REGISTER AND GRILLE CONNECTION DETAIL

CO-M-03 SCALE: N.T.S

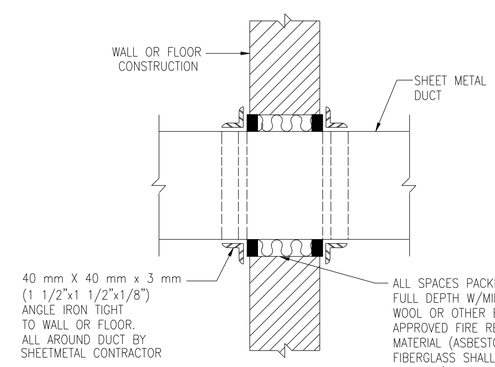

NOTES:

1. THIS DETAIL ONLY FOR WALLS OR FLOORS WHERE FIRE DAMPERS ARE NOT REQUIRED
2. FOR WALLS REQUIRING FIRE DAMPERS SEE OTHER DETAILS

5 DUCT PENETRATION DETAIL

CO-M-03 SCALE: N.T.S

SYMBOL	DESCRIPTION	DATE	APR

DESIGNED BY: F.MAMDOH
DATE: 04-11-07
DWN BY: A.LATIF
SUBMITTED BY: SYED ENAYATULLA CHIEF, PDT BLDG SYSTEMS
CHK BY: A.MAKRAM
FILE NO.: AF070CO-M-03

US Army Corps of Engineers Transatlantic Programs Center

ANA REGIONAL BRIGADE
PAKTIKA, AFGHANISTAN

STANDARD DETAILS

STANDARD MECHANICAL DETAILS

SHEET REFERENCE NUMBER:
CO-M-03

$(getvar, "dwgprefix")$(getvar, "dwgname")$(edtime, 0, MON DD",." YYYY - HH:MMam/pm)

FIG A-SUGGESTED SIZING

DUCT SIZE	BAND
450x300	40x16 GA.
600x500	25x6

TABLE 4:4

DUCT SIZE	ALLOWABLE LOAD PER FASTERNER
28.26	11.34 KG
24.22.20	15.87 KG
18.16	22.68 KG

WELD BOLT OR NO.B SCREW (MIN.)
DEVIATION PERMITTED BY OTHER ANALYSIS X=25mm Y=50mm ADD OTHERS TO ACCOMMODATE LOAD MINIMUM OF 3 ON 600 WIDTH AND UP ADD ALONG SIDES NEAREST ANCHORS.

NOTES:-

1-BRACKETS ARE SIZED FOR 3.7m OF DUCT MAXIMUM

2-LOCATE DUCTS AGAINST WALL OR MAXIMUM OF 50mm AWAY FROM WALL

3-EACH WALL ANCHOR SHALL SATISFY THE FOLLOWING CRITERIA UNLESS OTHER ANALYSIS MADE:-

A-TENSILE LOAD=3/8% DUCT WEIGHT SAFETY FACTOR OF 4"
B-SHEAR LOAD=3/8% DUCT WEIGHT SAFETY FACTOR OF 4"

FIG B SUGGESTED SIZING

DUCT SIZE	ANGLE
750x300	25x25x6
900x450	25x25x6
1067x600	32x32x6
1200x750	32x32x6

SUGGESTED SIZING FOR SPLIT BAND SUPPORT FOR 12ft OF DUCT

BOLT DIA.	BAND SIZE	DUCT DIA.
1/4" (6.35mm)	1"x16 GA (24.4x1.61mm)	UP TO 12" DIA 24 GA (UP TO 305mm DIA 0.70mm)
1/4" (6.35mm)	11/2"x16 GA (38.1x1.61mm)	13" TO 24" DIA 20 GA (330mm TO 610mm DIA 1.00mm)
3/8" (9.52mm)	2"x16 GA (51x1.61mm)	25" TO 36" DIA 20 GA (635mm TO 914mm DIA 1.00mm)
3/8" (9.52mm)	2"x10 GA (51x3.51mm)	37" TO 60" DIA 18 GA (940mm TO 1524mm DIA 1.31mm)

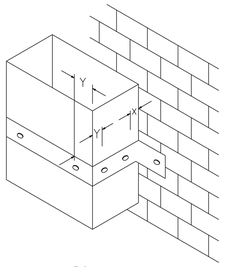

FIG. A

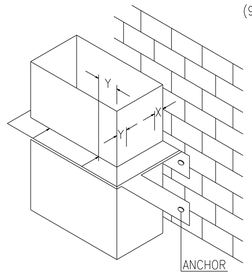

FIG. B

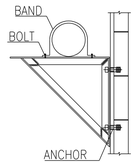

1 DUCT SUPPORTS FROM WALL

CO-M-04 SCALE: N.T.S

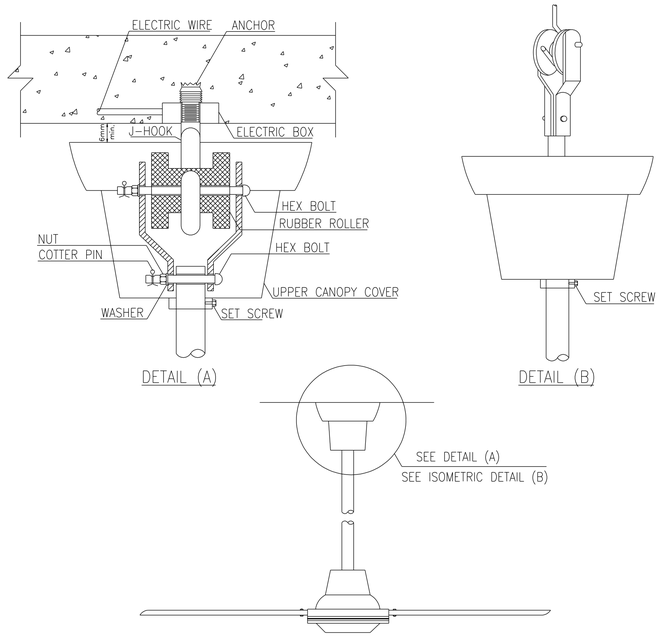

2 CEILING FAN MOUNTING

CO-M-04 SCALE: N.T.S

RECTANGULAR DUCT CONSTRUCTION FOR PRESSURE CLASS 1" W.G.

DUCT LARGEST SIZE IN (mm)	DUCT GAGE	MAX. ALLOWABLE JOINT SPACING FT (m)	RIGIDITY CLASS	TRANSFERS JOINT HEIGHT x THICKNESS (H x T) DUCT LARGER SIDE	DUCT SMALLER SIDE
UP TO 18" UP TO (455)	24	8 (2.4)	B	T-12 STANDING S 1" (25mm) x 26GA	T-1 22 GA
19" TO 24" (485) TO (610)	24	8 (2.4)	C	T-12 STANDING S 1" (25mm) x 24GA	T-3 22 GA + ANGLE 3/4" x 3/4" x 1/8" (20 x 20 x 6)
25" TO 30" (635) TO (760)	24	8 (2.4)	D	T-12 STANDING S 1 1/2" (40mm) x 22GA	T-3 22 GA + ANGLE 3/4" x 3/4" x 1/8" (20 x 20 x 6)
31" TO 36" (785) TO (915)	24	4 (1.2)	D	T-12 STANDING S 1 1/2" (40mm) x 22GA	T-3 22 GA + ANGLE 3/4" x 3/4" x 1/8" (20 x 20 x 6)
37" TO 48" (940) TO (1220)	24	4 (1.2)	E	T-12 STANDING S 1 1/2" (40mm) x 20GA	T-3 22 GA + ANGLE 1" x 1" x 1/8" (25 x 25 x 6)
49" TO 60" (1245) TO (1525)	24	4 (1.2)	F	T-12 STANDING S 1 1/2" (40mm) x 18GA	
61" TO 72" (1550) TO (1830)	22	4 (1.2)	H	T-13 STANDING S 1 5/8" (41mm) x 18GA + BAR 1 1/2"x1/8" (40 x 6)	
73" TO 84" (1855) TO (2135)	20	4 (1.2)	I	T-14 STANDING S 2 1/8" (54mm) x 20GA + ANGLE 2 "x2"x1/8" (50 x 50 x6)	
85" TO 108" (2150) TO (2745)	18	4 (1.2)	I	T-14 STANDING S 2 1/8" (54mm) x 20GA + ANGLE 2" x 2" x 1/8" (50 x 50 x 6)	

NOTES:-
1- FOR DUCT SIDE OVER 455mm. (18") THE CROSS BREAKING REQUIRED.
2- REINFORCEMENT SCHEDULE FROM SMACNA CONSTRUCTION TABLE (1-4)

GALVANIZED SHEET THICKNESS SCHEDULE

GAGE	WEIGHT NOM. KG/M²	THICKNESS IN MILLIMETERS
18	10.52	1.311
17		1.461
16	12.96	1.613
15		1.803
14	16.01	1.994
13		2.372
12	22.21	2.753
11		3.132
10	28.21	3.510
9		3.891
8		4.270

GALVANIZED SHEET THICKNESS SCHEDULE

GAGE	WEIGHT NOM. KG/M²	THICKNESS IN MILLIMETERS
28	3.81	.4750
27		.5131
26	4.42	.5512
25		.6274
24	5.64	.7010
23		.7772
22	6.86	.8534
21		.9296
20	8.08	1.006
19		1.158

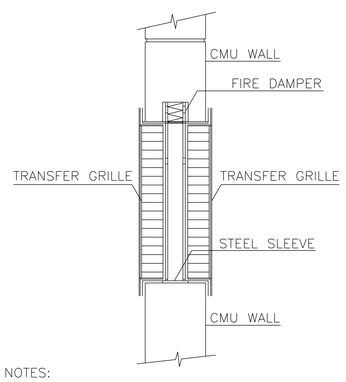

NOTES:
1- SEE MECH. FOR LOCATIONS, MOUNTING INFORMATION, AND GRILLES REQUIRING FIRE DAMPERS.

3 TYPICAL TRANSFER GRILLE

CO-M-04 SCALE: N.T.S

SYMBOL	DESCRIPTION	DATE	APR

DESIGNED BY: F.MAMDOH
DATE: 04-11-07
SUBMITTED BY: SYED ENAYATULLA CHIEF PROJ. BLDG SYSTEMS
DWN. BY: A.LAMR
FILE NO.: AF070TCO-M-04
CHK BY: A.MAKRAM

US Army Corps of Engineers Transatlantic Programs Center

ANA REGIONAL BRIGADE
PAKTIKA, AFGHANISTAN

STANDARD DETAILS

STANDARD MECHANICAL DETAILS

SHEET REFERENCE NUMBER:
CO-M-04

$(getvar, "dwgprefix")$(getvar, "dwgname")$(edtime, O, MON DD", " YYYY - HHMMam/pm)

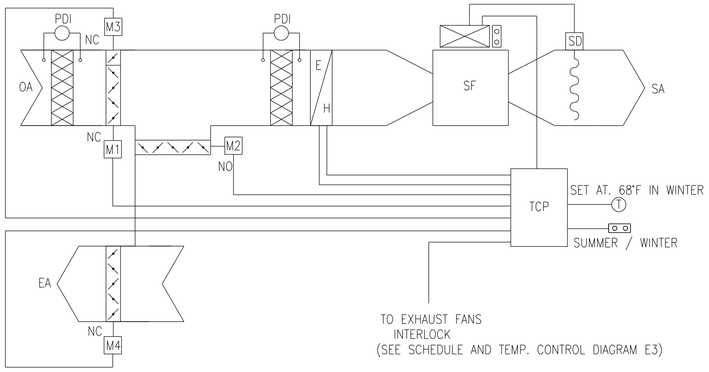

START-UP
THE SUPPLY FAN (SF) SHALL BE MANUALLY STARTED AND STOPPED FROM THE MOTOR STARTER.

DAMPERS
THE MINIMUM OUTSIDE AIR (OA) DAMPER (M3) SHALL BE INTERLOCKED TO OPEN WHEN THE FAN IS ENERGIZED. THE TWO POSITION OA DAMPER (M1). RETURN AIR (RA) DAMPER (M2), AND RELIEF AIR DAMPER (M4) SHALL BE CONTROLLED BY THE SUMMER/WINTER SWITCH, IN THE SUMMER POSITION, OA DAMPER (M1) AND AIR DAMPER (M4) SHALL BE OPEN AND RA DAMPER (M2) SHALL BE CLOSED. IN THE WINTER POSITION, OA DAMPER (M1) AND AIR DAMPER (M4) SHALL BE CLOSED AND RA DAMPER (M2) SHALL BE OPEN.

FAN INTERLOCKS
THE SMOKE DETECTOR (SD) SHALL BE INTERLOCKED TO STOP THE SUPPLY FAN (SF) IN THE EVENT OF SMOKE IN THE SUPPLY DUCT.

NOTES:
1- SEE EXHAUST FAN TEMPERATURE CONTROL DIAGRAMS FOR EXHAUST FAN OPERATION.

1 TEMPERATURE CONTROL DIAGRAM (A-1)
CO-M-045 SCALE: N.T.S

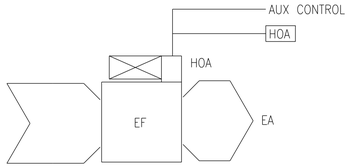

START-UP
THE EXHAUST FAN SHALL BE STARTED MANUALLY BY PLACING THE HAND-OFF-AUTO (HOA) SWITCH IN THE HAND POSITION. IN THE AUTO POSITION, AN AUXILIARY CONTACT IN THE INTERLOCKED EQUIPMENT MOTOR STARTER SHALL START THE FAN.

2 TEMPERATURE CONTROL DIAGRAM & SEQUENCE OF OPERATION (E1)
CO-M-045 SCALE: N.T.S

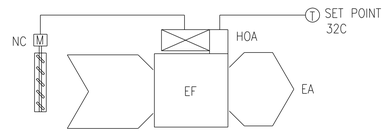

START-UP
THE EXHAUST FAN SHALL BE STARTED MANUALLY BY PLACING THE HAND-OFF-AUTO (HOA) SWITCH IN THE HAND POSITION. IN THE AUTO POSITION, THE SPACE THERMOSTAT SHALL START THE FAN ON A RISE IN SPACE TEMPERATURE ABOVE THE SET POINT.

DAMPERS
THE OUTSIDE AIR (OA) DAMPER SHALL BE INTERLOCKED TO OPEN WHEN THE FAN IS ENERGIZED.

3 TEMPERATURE CONTROL DIAGRAM & SEQUENCE OF OPERATION (E2)
CO-M-045 SCALE: N.T.S

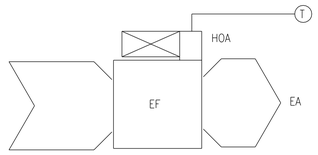

START-UP
THE EXHAUST FAN SHALL BE STARTED MANUALLY BY PLACING THE HAND-OFF-AUTO (HOA) SWITCH IN THE HAND POSITION. IN THE AUTO POSITION, THE SPACE THERMOSTAT SHALL START THE FAN ON A RISE IN SPACE TEMPERATURE ABOVE THE SET POINT.

4 TEMPERATURE CONTROL DIAGRAM & SEQUENCE OF OPERATION (E3)
CO-M-045 SCALE: N.T.S

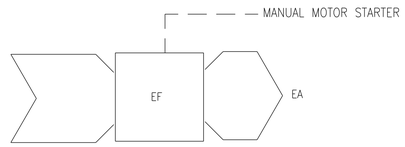

START-UP
THE EXHAUST FAN SHALL BE STARTED FROM A MANUAL MOTOR STARTER.

5 TEMPERATURE CONTROL DIAGRAM & SEQUENCE OF OPERATION (E4)
CO-M-045 SCALE: N.T.S

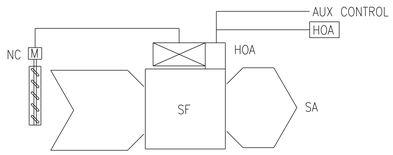

START-UP
THE SUPPLY FAN SHALL BE STARTED MANUALLY BY PLACING THE HAND-OFF-AUTO (HOA) SWITCH IN THE HAND POSITION. IN THE AUTO POSITION, AN AUXILIARY CONTACT IN THE INTERLOCKED EQUIPMENT MOTOR STARTER SHALL START THE FAN.

DAMPERS
THE OUTSIDE AIR (OA) DAMPER SHALL BE INTERLOCKED TO OPEN WHEN THE FAN IS ENGRGIZED.

6 TEMPERATURE CONTROL DIAGRAM & SEQUENCE OF OPERATION (S1)
CO-M-045 SCALE: N.T.S

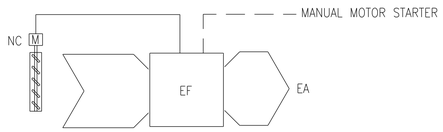

START-UP
THE EXHAUST FAN SHALL BE STARTED FROM A MANUAL MOTOR STARTER.

DAMPERS
THE OUTSIDE AIR (OA) DAMPER SHALL BE INTERLOCKED TO OPEN WHEN THE FAN IS ENGRGIZED IF REQUIRED (AS SHOWN ON DRAWINGS).

7 TEMPERATURE CONTROL DIAGRAM & SEQUENCE OF OPERATION (E5)
CO-M-045 SCALE: N.T.S

DRAWING NOT TO SCALE

SYMBOL	DESCRIPTION	DATE	APR

DESIGNED BY: F.MAMDOH
DATE: 04-11-07
DWN BY: A.LATIF
SUBMITTED BY: SYED ENAYATULLA CHIEF PROJ. BLDG SYSTEMS
CHK BY: A.MAKRAM
FILE NO.: AF0707CO-M-05

US Army Corps of Engineers Transatlantic Programs Center

ANA REGIONAL BRIGADE
PAKTIKA, AFGHANISTAN

CONTROL DIAGRAM

SHEET REFERENCE NUMBER:
CO-M-05

$(getvar, "dwgprefix")$(getvar, "dwgname")$(edtime, 0, MON DD", " YYYY - HHMMam/pm)

ABBREVIATIONS

ABV. CLG	:–	ABOVE CEILING
AFF	:–	ABOVE FINISH FLOOR
AHU	:–	AIR HANDLING UNIT
AMPS	:–	AMPERES
B.D	:–	BACKDRAFT DAMPER
B.H	:–	BASE BOARD HEATER
B.M.O	:–	BELL MOUTH OPENING
BOP	:–	BOTTOM OF PIPE
BTU/H	:–	BRITISH THERMAL UNITS PER HOUR
CD	:–	CONDENSATE DRAIN
CF	:–	CEILING FAN
C.F.M	:–	CUBIC FEET PER MINUTE
C.M.H	:–	CUBIC METER PER HOUR
CONN	:–	CONNECTION
CORR	:–	CORRUGATED
CU	:–	CONDENSING UNIT
DB	:–	DRY BULB
DH	:–	DIESEL UNIT HEATER
DIA	:–	DIAMETER
D.L	:–	DOOR LOUVER
DT	:–	DAY TANK
DWG	:–	DRAWING
EF	:–	EXHAUST FAN
EL	:–	EXHAUST LOUVER
ENT	:–	ENTERING
EXH.G	:–	EXHAUST GRILLE
EXT	:–	EXTERNAL
F.A.D	:–	FRESH AIR DUCT
FD	:–	FIRE DAMPER
FLA	:–	FULL LOAD AMPERES
FOR	:–	FUEL OIL RETURN
FO	:–	FUEL OIL
FOS	:–	FUEL OIL SUPPLY
FPM	:–	FEET PER MINUTE
FT	:–	FEET
GALV	:–	GALVANIZED
HP	:–	HORSE POWER
KW	:–	KILO WATTS
LD	:–	LEAK DETECTOR
L/S	:–	LITERS PER SECOND
LT	:–	LEVEL TRANSMITTER

ABBREVIATIONS

LVG	:–	LEAVING
MRAD	:–	MOTORIZED RETURN (RECIRCULATION)
MAID	:–	MOTORIZED AIR INTAKE DAMPER
MEAD	:–	MOTORIZED EXHAUST AIR DAMPER
M.D	:–	MOTORIZED DAMPER
mm	:–	MILLIMETERS
MPS	:–	METERS PER SECOND
NC	:–	NORMALLY CLOSED
NO	:–	NORMALLY OPEN
OC	:–	ON CENTERS
OSA	:–	OUTSIDE AIR
P	:–	PUMP
PACU	:–	PACKAGE AIR CONDITIONING UNIT
P.S	:–	POWER SUPPLY
R.C.D	:–	RETURN CEILING DIFFUSER
R.D	:–	RETURN AIR DUCT
RED	:–	REDUCTION/REDUCER
R.G	:–	RETURN GRILLE
RPM	:–	REVOLUTIONS PER MINUTE
RS	:–	REFRIGERANT SUCTION
RL	:–	REFRIGERANT LIQUID
S.C.D	:–	SUPPLY CEILING DIFFUSER
S.D	:–	SUPPLY DUCT
SF	:–	SUPPLY FAN
S.G	:–	SUPPLY GRILLE
SM.D	:–	SMOKE DETECTOR
SP	:–	STATIC PRESSURE
SQ	:–	SQUARE
SR	:–	SHORT RADIUS
S.R–X	:–	SUPPLY REGISTER TYPE–X
SS	:–	STAINLESS STEEL
SU	:–	SPLIT UNIT
T	:–	SPACE THERMOSTAT
T.G	:–	TRANSFER GRILLE
TOS	:–	TOP OF SUPPORT
TYP	:–	TYPICAL
U.C	:–	UNDER CUT
UH	:–	UNIT HEATER
V.D	:–	VOLUME DAMPER
WB	:–	WET BULB
WG	:–	WATER GAGE

NOTES:

1– ALL DIMENSIONS ARE IN MM UNLESS OTHERWISE NOTED.

2– DUCT DIMENSION INDICATES INSIDE DIMENSIONS.

3– EXACT LOCATIONS OF POWER SUPPLY POINTS, CONTROL PANEL AND MOTOR SWITCH TO BE TAKEN FROM ELECTRICAL DESIGN DRAWINGS.

4– THERMOSTAT HEIGHT IS 1525mm ABOVE F.F.L.

5– FOR STANDARD DETAILS SEE DWG. No. (CO–M–01, 02, 03 & 04).

6– FOR CONTROL DIAGRAMS SEE DWG. No. (CO–M–05).

7– ALL EXTERIOR SUPPLY DUCTS WILL BE INSULATED WITH 50 mm THICK. MINERAL FIBER AND SHALL BE COVERED WITH METAL CLADDING.

8– ALL MENTIONED HEIGHTS ARE MEASURED FROM F.F.L.

9– INSULATE ALL THE SUPPLY DUCT WITH 50mm(2") INSULATION THICKNESS, 16kg/m³ FIBERGLASS.

SYMBOLS

S	:–	SWITCH
T	:–	THERMOSTAT
T	:–	TEMPERATURE SENSOR
M	:–	MOTORIZED DAMPER
CO	:–	CARBON MONOXIDE SENSOR
	:–	CEILING FAN
	:–	THRU WALL EXHAUST FAN
	:–	BASE BOARD HEATER
	:–	UNIT HEATER
	:–	DIESEL UNIT HEATER
	:–	OUTSIDE INTAKE LOUVER
	:–	GRAVITY RIDGE VENT
	:–	EXHAUST ROOF FAN
	:–	SUPPLY ROOF FAN
	:–	SPLIT UNIT
	:–	CONDENSING UNIT
F.F.L xx	:–	FINISH FLOOR LEVEL IN (m) MEASURED FROM REFRENCE +0.00 LEVEL
	:–	SUPPLY SECTION FAN
	:–	FIRE DAMPER
	:–	VOLUME DAMPER
	:–	DOOR LOUVER
	:–	UNDER CUT

EQUIPMENT IDENTIFICATION

XX–XX–XX

- UNIT NUMBER
- BUILDING ABBREVIATION
- EQUIPMENT TYPE

DUCTWORK

	SUPPLY AIR DIFFUSER – ARROWS INDICATE PATTERN. NO PATTERN SHOWN EQUALS 4–WAY.
	RETURN AIR GRILLE
	EXHAUST GRILLE
	SUPPLY AIR SLOT
	RETURN AIR SLOT
	ROUND DUCTWORK. DIAMETER INDICATED IN MILLIMETER
	RECTANGULAR DUCTWORK. SIZE INDICATED IN INCHES, FIRST NUMBER IS SIDE SHOWN.
	FLEXIBLE DUCT
	SUPPLY OR OUTSIDE AIR DUCT
	RETURN AIR DUCT.
	RELIEF OR EXHAUST AIR DUCT.
	90 DEGREE DUCTWORK ELBOW.
	RADIUS DUCTWORK ELBOW – ROUND OR RECTANGULAR.
	RECTANGULAR DUCTWORK BRANCH TAKE–OFF WITH 45 DEGREE BRANCH INLET.
	FLARED SPIN–IN WITH DAMPER AND FLEX DUCT (DIFFUSER CONNECTION).
	ROUND DUCT BRANCH TAKE–OFF FROM RECTANGULAR MAIN WITH CONICAL TAP.
	DUCTWORK SIZE TRANSITION.
12	DUCT PRESSURE CLASS. POINT OF CHANGE IN DUCT CONSTRUCTION.
	FLEXIBLE DUCT CONNECTION
	SUPPLY OR OUTSIDE AIR DUCT UP
	SUPPLY OR OUTSIDE AIR DUCT DOWN
	RETURN AIR DUCT UP
	RETURN AIR DUCT DOWN
	RELIEF OR EXHAUST AIR DUCT UP
	RELIEF OR EXHAUST AIR DUCT DOWN
	IN–LINE 90 DEGREE DROP (RISE) IN DUCT
UP	INCLINED RISE IN DUCT
DN	INCLINED DROP IN DUCT
	TURNING VANES
	DUCT EXTRACTOR
	SPLITTER DAMPER
AD	ACCESS DOOR

DRAWING NOT TO SCALE

SYMBOL	DESCRIPTION	DATE	APR

DESIGNED BY: F.MAMDOH
DATE: 04-11-07
DWN BY: A.LATIF
SUBMITTED BY: SYED ENAYATULLA CHIEF, ENG BLDG SYSTEMS
CHK BY: A.MAKRAM
FILE NO.: AF070TCO-M-06

US Army Corps of Engineers Transatlantic Programs Center

ANA REGIONAL BRIGADE
PAKTIKA, AFGHANISTAN

LEGEND AND ABBREVIATIONS

SHEET REFERENCE NUMBER:
CO–M–06

$(getvar, "dwgprefix")$(getvar, "dwgname")$(edtime, 0, MON DD"", YYYY – H:MMam/pm)

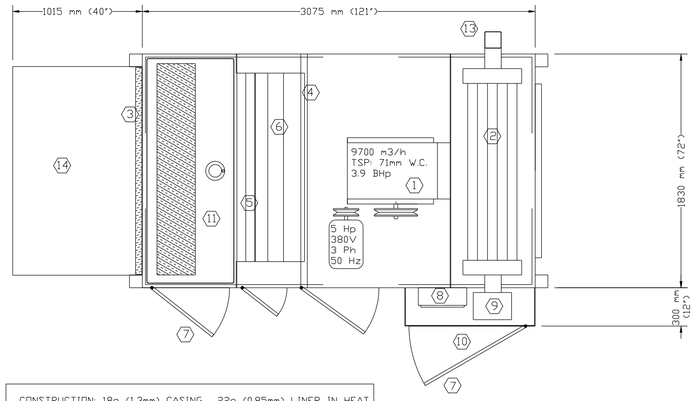

CONSTRUCTION: 18g (1.3mm) CASING. 22g (0.85mm) LINER IN HEAT EXCHANGER SECTION. INSULATION, 1" (25mm) @ 1.5 lb/ft3 (24 kg/m3). 4" (100mm) STRUCTURAL STEEL TUBE BASE. DRY ENAMEL FINISH.
APPROX. WT. 2700 lb (1227 kg)

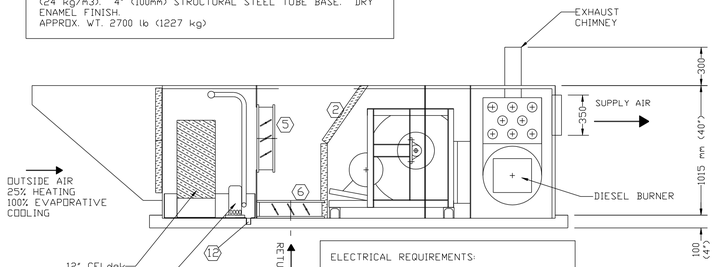

THE EVAPORATIVE-COOLER REQUIRES A 20mm WATER SUPPLY PIPE, AND A 20mm BLEED-OFF DRIAN PIPE TO A DRAIN-PIT.

ELECTRICAL REQUIREMENTS:

BLOWER-MOTOR + FUEL BLOWER & PUMP + EVAP. PUMP = 5.0 pkW.
I = 5000W / 1.73 / 380V / 0.8 = 9.5 amp

MODEL: TYPICAL : 102 tkW INPUT
SCALE X 2

THE HEAT-COOL-UNIT MUST BE FACTORY BUILT FROM A SINGLE MANUFACTURER.

TYPICAL HEAT-COOL-UNIT SCHEDULE	
1	S/A FAN & MOTOR: 5700 cfm (9700 m3/h, 2.69 m3/s) @ ESP 0.5" (13mm) W.C. TSP 2.80" (71mm) W.C.; FAN SIZE 18/13 (460/330), DIDW; 3.9 BHp (2.91 BKw) MOTOR 5 Hp (3.73 Kw), 2 SPEED, 380v/3/50Hz, TEFC, MIN. 40°C AMBIENT
2	AAON INDIRECT-FIRED STAINLESS-STEEL HEAT EXCHANGER. INPUT 350 MBH (102 TKw); DIESEL FUEL; AIR TEMP. RISE 48 °F (27 °C)
3	2" (50mm) 30% EFF WASHABLE PRE-FILTERS.
4	2" (50mm) 30% EFF. PLEATED FINAL-FILTERS.
5	OUTSIDE AIR DAMPERS with ACTUATORS. (FOR MINIMUM & 100% OA)
6	RETURN AIR DAMPER with ACTUATOR.
7	ACCESS DOORS (TYP), HINGED with CAMLOCK
8	ELECTRICAL PANEL
9	DIESEL FUEL BURNER - RIELLO 40 (No. 2 FUEL OIL); FIRING RATE 1.45 TO 2.95 gph (5.49 TO 11.17 lt/h); CAPACITY 203 TO 413 MBH (60 TO 120 tkW) FUEL PRESSURE 100 TO 200 psig (690 TO 1380 KPa).
10	ELECTRICAL & PIPING VESTIBULE
11	EVAPORATIVE COOLING SECTION, EVAP. PADS: 12" CELdek MEDIA @ 85% EFF. Complete with WATER-PUMP, FLOAT-VALVE, DISTRIBUTORS & PIPE.
12	STAINLESS-STEEL SUMP TANK with 3/4" NPT DRAIN PIPE & BLEED-OFF OVERFLOW (to prevent mineral build-up in evap. water).
13	BURNER EXHAUST CHIMNEY 5" X 5 " (125 X 125 mm).
14	OUTDOOR AIR INTAKE HOOD with BIRDSCREEN.

NOTE: SIZING CALC'S ARE GENERAL, AND NOT FOR ANY PARTICULAR HEAT-COOL-UNIT

********** SIZING CALCULATIONS **********

AIR HANDLING HEATER UNIT RATING (INPUT)
350,000 Btu/h / 3413 = 103 tkW * 0.80 eff = 82 tkW OUT
DIESEL HHV: 44.8 mj/kg * 238.9 Kcal/mj * 0.86 kg/lt / 860 Kcal/h/tkW = 10.7 tkW-h/lt fuel * 0.80 heater eff = 8.56 tkW-h(output)/lt fuel.

MAX FUEL RATE = 82 tkW / 8.56 tkW-h/lt = 9.58 lt/h * 24 h/day = 230 lt/day :: TANK, 600 lt / 230 = 2.6 days

REQUIRED AIR FLOW @ dt = 25 °C (RANGE dt 10 to 35 °C)
TYPICAL: SUPPLY AIR 45 °C, RETURN AIR 20 °C
AIR FLOW: Q(m3/s) = 82 tkW / 1.22 / 25 °C = 2.69 m3/s
(CFM = 2,118 * 2.69 m3/s = 5,700 CFM)
SUPPLY & RETURN AIR DUCTS: 1.024 m X 0.35 m = 0.358 m2
EQUIV. DIA. = 1.3 * (1.024 * 0.35)^0.625 / (1.024 + 0.35)^0.25 = (0.638 m dia)^2 * 0.785 = 0.314 m2 EQUAL FRICTION.
ACTUAL AIR VEL. = 2.69 m3/s / 0.358 m2 = 7.51 m/s (1480 fpm) (TYPICAL: APART. = 1500 fpm; GEN OFFICE = 2200 fpm)
FRICTION VEL. = 2.69 m3/s / 0.314 m2 = 8.57 m/s
DUCT PRESS. LOSS: p(Pa/m) = 0.0112 * (8.57 m/s)^2.43 * 1 m / (2.69 m3/s)^0.61 = 1.13 Pa/m * 0.102 = 0.116 mmW.C. / lin m OF EQUIVALENT LENGTH.

82 tkW out / 0.15 tkW = 547 m2 floor
2.69 m3/s air / 547 m2 = 0.00492 m3/s /m2
0.00492 * 3600 s/h = 18 m3/h / m2 floor
EVAPORATIVE COOLING AIR FLOW

INTERNATIONAL MECHANICAL CODE, 2000

SECT. 918.2 MINIMUM AREA OUTSIDE & RETURN AIR DUCTS, WARM-AIR FURNACE, NOT LESS THAN 4402 mm2/tkW OUTPUT RATING.
UNIT: 350,000 Btu/h / 3413 *0.8 eff = 82 tkW

REQUIRED AREA = 4402 mm2/tkW * 82 tkW = 361,000 mm2

AVAIL. AREA = 1024mm * 355mm = 364,000 mm2

COOLING PREDICTED CAPACITY AT db = 35 °C & wb = 24 °C; EVAP. EFF. = 0.82; & 2.69 m3/s FLOW
q = 1.22 * 2.69 m3/s * (35 - 24)°C * 0.82 = 29.6 tkW * 0.284 ton/tkW = 8.4 ton COOLING

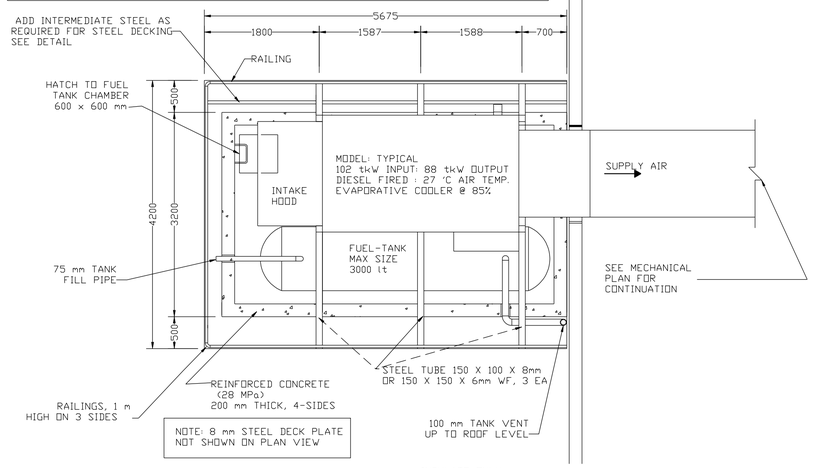

NOTE: 8 mm STEEL DECK PLATE NOT SHOWN ON PLAN VIEW

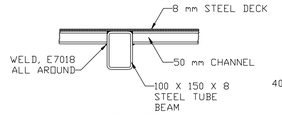

TYPICAL DECK DETAIL, SCALE X 4

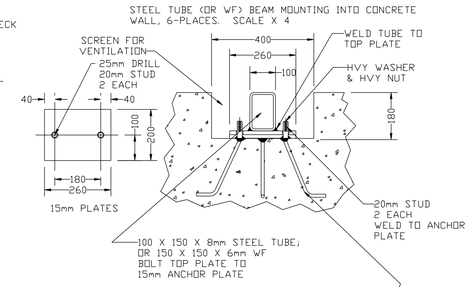

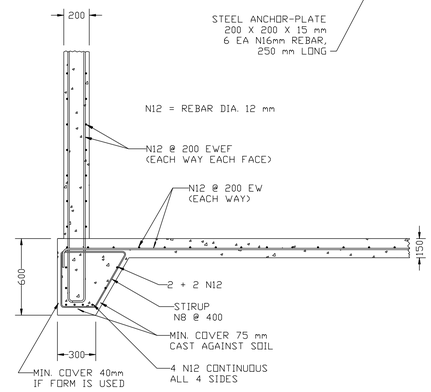

REINFORCED CONCRETE (NO MASONRY) FUEL-TANK ENCLOSURE & MOUNTING PLATFORM FOR HEAT-COOL UNIT.

SCALE X 2

INSTALLATION OF HEAT-COOL-UNITS (H-C-U)

FOR INSULATED WALLS OF 3.5 m2-°K/watt (R 20) & INSULATED ROOFS OF 5.3 m2-°K/watt (R 30); AND AT 0.15 tkW/m2 FLOOR AREA: ONE (1) 88 tkW HEAT-COOL-UNIT FOR EACH 500 TO 600 m2 OF BLDG FLOOR AREA. FOR BLDG'S UNDER 250 m2 USE SPLIT-PAC HEAT-PUMPS. FOR MAINTENANCE SHOPS USE ONE (1) H-C-U FOR 250 TO 300 m2 OF FLOOR AREA TO ACCOUNT FOR INCREASED VENTILATION.

WARNING: IF THE HEAT-COOL-UNIT IS ROOF MOUNTED, THE DIESEL FUEL TANK MUST BE GROUND-LEVEL OR UNDERGROUND INSTALLED IN A REINFORCED CONCRETE VAULT. ROOF STORAGE OF FUEL IS PROHIBITED.

STRUCTURAL ARC-WELDING FOR ROOF HEAT-COOL-UNIT MOUNTING MUST BE WITH E7018 ELECTRODES, USING A DC WELDING-MACHINE WITH PRECISE ARC VOLTAGE/AMPERAGE CONTROL. AC WELDERS AND E6013 ELECTRODES ARE PROHIBITED.

APPROX. CONCRETE 28 MPa:
FOUNDATION-SLAB : 6.5 m3
ENCLOSURE-WALLS : 6.0 m3
AT 1.5 m HIGH

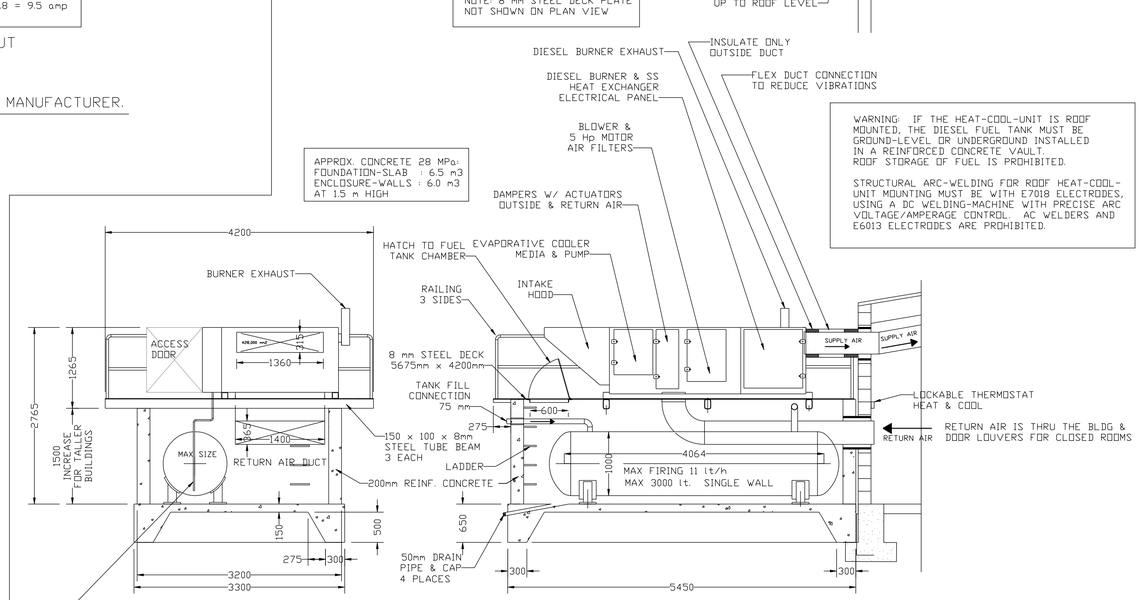

TYPICAL HEAT-COOL-UNIT (H-C-U) FOR RETROFIT TO EXISTING BUILDINGS. FOR TALLER BUILDINGS, INCREASE THE HEIGHT OF THE CONCRETE ENCLOSURE, OR USE A "S" GOOSE-NECK SUPPLY DUCT. NEW CONSTRUCTION CAN USE THIS ON-GRADE METHOD, OR BUILD A ROOF STRUCTURE TO MOUNT THE H-C-U ON THE ROOF, WITH A GRADE OR UNDERGROUND FUEL-STORAGE TANK IN A CONCRETE VAULT (ENCLOSURE). NO FUEL-TANK SHALL BE MOUNTED ON THE ROOF. H-C-U ROOF STRUCTURE REQUIRES E7018, DC WELDING. THE CONCRETE ENCLOSURE MUST BE WATER-TIGHT. TO REPLACE THE FUEL-TANK REQUIRES TO REMOVE THE HEAT-COOL-UNIT AND THE STEEL DECK STRUCTURE. ACCESS TO THE FUEL-TANK IS THRU A DECK HATCH UNDER THE AIR INTAKE HOOD.

TYPICAL HEAT-COOL-UNIT CONCEPT DRAWING . ACTUAL FIELD DIMENSIONS & DETAILS WILL VARY DEPENDING ON HEAT-COOL-UNIT MANUFACTURER AND TYPE & SIZE OF BLDG.

HEAT-COOL-UNIT (DIESEL-FIRED & EVAPORATIVE-COOLED)

File: ANA HEAT-COOL DESIGN-01 :: 10 DEC 06

M. HORTON :: (CLARIFICATIONS 29 MAR 07) :: MRH

DRAWING NOT TO SCALE

SYMBOL	DESCRIPTION	DATE	APR

DESIGNED BY: XXX
DATE: 04-11-07
DWN BY: XXX
SUBMITTED BY: SYED ENAYATULLA CHIEF POL BLDG SYSTEMS
CHK BY: XXX
FILE NO.: AF0707

US Army Corps of Engineers Transatlantic Programs Center

ANA REGIONAL BRIGADE
PAKTIKA, AFGHANISTAN

STANDARD DETAILS

SHEET REFERENCE NUMBER:
CO-M-07

$(getvar, "dwgprefix")$(getvar, "dwgname")$(edtime, O, MON DD",". YYYY - HHMMam/pm)

ELECTRIC WATER HEATER SCHEDULE

Ser No.	EWH Name	Capacity (Gallon)	Electrical Data	TEMPERATURE RISE	REMARKS
Dining Facility (DF)					
1	EWH-DF-01	50 gal.	9KW/3PH/380V/50HZ	120F (49C)	
2	EWH-DF-02	50 gal.	9KW/3PH/380V/50HZ	120F (49C)	
3	EWH-DF-03	50 gal.	9KW/3PH/380V/50HZ	120F (49C)	
4	EWH-DF-04	50 gal.	9KW/3PH/380V/50HZ	120F (49C)	
Battalion HQ (HQ)					
5	EWH-HQ-01	50 gal.	6KW/3PH/380V/50HZ	120F (49C)	
Central Toilet & Shower (TS)					
6	EWH-TS-01	120 gal.	18KW/3PH/380V/50HZ	120F (49C)	
7	EWH-TS-02	120 gal.	18KW/3PH/380V/50HZ	120F (49C)	
8	EWH-TS-03	120 gal.	18KW/3PH/380V/50HZ	120F (49C)	
9	EWH-TS-04	120 gal.	18KW/3PH/380V/50HZ	120F (49C)	
10	EWH-TS-05	120 gal.	18KW/3PH/380V/50HZ	120F (49C)	
11	EWH-TS-06	120 gal.	18KW/3PH/380V/50HZ	120F (49C)	
Maintenance garage (MG)					
12	EWH-MG-01	80 gal.	9KW/3PH/380V/50HZ	120F (49C)	
Garrison HQ (GQ)					
13	EWH-GQ-01	60 gal.	9KW/3PH/380V/50HZ	120F (49C)	
Brigade HQ (BH)					
14	EWH-BH-01	30 gal.	6KW/3PH/380V/50HZ	120F (49C)	
15	EWH-BH-02	20 gal.	3KW/1PH/220V/50HZ	120F (49C)	
16	EWH-BH-03	20 gal.	3KW/1PH/220V/50HZ	120F (49C)	
Power Plant (PP)					
17	EWH-PP-01	8 gal.	3KW/1PH/220V/50HZ	120F (49C)	
Medical Clinic (CL)					
18	EWH-CL-01	120 gal.	15KW/3PH/380V/50HZ	120F (49C)	
19	EWH-CL-02	120 gal.	15KW/3PH/380V/50HZ	120F (49C)	
Reception Center (RC)					
20	EWH-RC-01	40 gal.	6KW/3PH/380V/50HZ	120F (49C)	
CS & CSS Maintenance garage (BG)					
21	EWH-BG-01	40 gal.	6KW/3PH/380V/50HZ	120F (49C)	
Bachelor Building (B2)					
22	EWH-B2-01	80 gal.	9KW/3PH/380V/50HZ	120F (49C)	
23	EWH-B2-02	80 gal.	9KW/3PH/380V/50HZ	120F (49C)	
Bachelor Building (B3)					
24	EWH-B3-01	100 gal.	12KW/3PH/380V/50HZ	120F (49C)	
25	EWH-B3-02	100 gal.	12KW/3PH/380V/50HZ	120F (49C)	
26	EWH-B3-03	100 gal.	12KW/3PH/380V/50HZ	120F (49C)	
Bachelor Building (B4)					
27	EWH-B4-01	80 gal.	9KW/3PH/380V/50HZ	120F (49C)	
28	EWH-B4-02	80 gal.	9KW/3PH/380V/50HZ	120F (49C)	
Training Building (TB)					
29	EWH-TB-01	30 gal.	3KW/1PH/220V/50HZ	120F (49C)	
Fire Station (FS)					
30	EWH-FS-01	20 gal.	3KW/1PH/220V/50HZ	120F (49C)	
Laundry (LU)					
31	EWH-LU-01	200 gal.	24KW/3PH/380V/50HZ	120F (49C)	
32	EWH-LU-02	200 gal.	24KW/3PH/380V/50HZ	120F (49C)	
33	EWH-LU-03	200 gal.	24KW/3PH/380V/50HZ	120F (49C)	
34	EWH-LU-04	200 gal.	24KW/3PH/380V/50HZ	120F (49C)	
Communication Building (CB)					
35	EWH-CB-01	20 gal.	3KW/1PH/220V/50HZ	120F (49C)	

WASTE OIL STORAGE TANK SCHEDULE

UNIT SYMBOL	CAPACITY		DIMENSIONS (APPROXIMATE)		REMARKS
			DIAMETER (NOMINAL)	LENGTH (NOMINAL)	
	LITERS	GAL.	mm	mm	
WOT-MG-01	1892	500	AS PER MANUFACTURE DATA SHEET	AS PER MANUFACTURE DATA SHEET	THE TANK IS HORIZONTAL STEEL WITH SADDLE, GAUGE & VENT
WOT-MG-02	1892	500	AS PER MANUFACTURE DATA SHEET	AS PER MANUFACTURE DATA SHEET	THE TANK IS DOUBLE WALL STORAGE
WOT-BG-01	1892	500	AS PER MANUFACTURE DATA SHEET	AS PER MANUFACTURE DATA SHEET	THE TANK IS HORIZONTAL STEEL WITH SADDLE, GAUGE & VENT
WOT-BG-02	1892	500	AS PER MANUFACTURE DATA SHEET	AS PER MANUFACTURE DATA SHEET	THE TANK IS DOUBLE WALL STORAGE
WOT-PP-01	9.465	2500	1905	4115	THE TANK IS HORIZONTAL STEEL OR FIBERGLASS CONSTRUCTION DUAL WALL CONSTRUCTION WITH HOLD STRAPS.

REFRIGERATED AIR DRYER

UNIT SYMBOL	DESCRIPTION	LOCATION	REMARKS
RAD-MG-1	REFRIGERATED AIR DRYER	MAINTENANCE GARAGE	14.1 L/S (30 ACFM) AT 3 °C, AIR INLET 42.8 °C, DESIGN PRESSURE 1034 KPA (150 PSIG) INLET AIR PRESSURE 1379 KPA (200 PSIG) AIR PRESSURE DROP 30 KPA (4.35 PSIG) 1 KW, 220 V, 1 PHASE, 50 CYCLES.
RAD-BG-1	REFRIGERATED AIR DRYER	MAINTENANCE GARAGE	14.1 L/S (30 ACFM) AT 3 °C, AIR INLET 42.8 °C, DESIGN PRESSURE 1034 KPA (150 PSIG) INLET AIR PRESSURE 1379 KPA (200 PSIG) AIR PRESSURE DROP 30 KPA (4.35 PSIG) 1 KW, 220 V, 1 PHASE, 50 CYCLES.
RAD-PP-1	REFRIGERATED AIR DRYER	POWER PLANT MECH. RM 106	75 L/S (MAXIMUM) AIR INLET 50 °C MAXIMUM PRESSURE 16 BAR, 1KW, AIR PRESSURE DROP 0.14 BAR

PLUMBING FIXTURE SCHEDULE

FIX. No.	SYMBOL	FIXTURE NAME	PLUMBING FIXTURE SCHEDULE								REMARKS
			C.W.		H.W.		WASTE		VENT		
			MM	(INCHES)	MM	(INCHES)	MM	(INCHES)	MM	(INCHES)	
P1		EASTERN WATER CLOSET	15	(1/2")	–	–	100	(4")	50	(2")	
P1A		WESTERN WATER CLOSET (FLOOR OUTLET)	15	(1/2")	–	–	100	(4")	50	(2")	
P3A		MULTI-FAUCET SINK	15	(1/2")	15	(1/2")	50	(2")	40	(1 1/2")	FIXTURE BY ARCH SEE PLANS FOR # OF FAUCETS
P3B		LAVATORY (COUNTER MOUNTED)	15	(1/2")	15	(1/2")	40	(1 1/2")	40	(1 1/2")	
P3		LAVATORY (WALL HUNG)	15	(1/2")	15	(1/2")	40	(1 1/2")	40	(1 1/2")	
P4		JANITOR SINK (FLOOR MOUNT JANITOR TYPE)	15	(1/2")	15	(1/2")	50	(2")	40	(1 1/2")	
P5		SHOWER	15	(1/2")	15	(1/2")	50	(2")	40	(1 1/2") MIN.	
P7		EMERGENCY SHOWER AND EYE-WASH	30	(1 1/4")	–	–	–	–	–	–	
P8		SERVICE SINK	15	1/2	15	1/2	80	3"	50	2"	
P9		KITCHEN SINK	15	(1/2")	15	(1/2")	50	(2")	40	(1 1/2")	
P10		ABLUTION MIXING VALVE	15	(1/2")	15	(1/2")	–	–	–	–	
P11		GREASE INTERCEPTOR	–	–	–	–					SEE PLAN
P13		FLOOR SINK (FS)	–	–	–	–			–	–	SEE PLAN
FD A		FLOOR DRAIN	–	–	–	–	–	–	–	–	SEE PLAN 1
FCO		FLOOR CLEANOUT	–	–	–	–	–	–	–	–	SEE PLAN 2
EWH		ELECTRIC WATER HEATER					–	–	–	–	SEE PLAN
P14		DRINKING FOUNTAIN	15	(1/2")	–	–	50	(2")	40	(1 1/2")	SEE PLAN
P17		HAND SINK (WALL HUNG)	15	(1/2")	15	(1/2")	40	(1 1/2")	40	(1 1/2")	
P18		SINGLE COMP SINK	15	(1/2")	15	(1/2")	40	(1 1/2")	40	(1 1/2")	
P19		DBL COMP SINK	15	(1/2")	15	(1/2")	40	(1 1/2")	40	(1 1/2")	
P20		3-COMP SINK	15	(1/2")	15	(1/2")	50	(2")	40	(1 1/2")	
P21		CAN WASH	25	(1")	25	(1")	50	(2")	40	(1 1/2")	SEE PLAN IN DINING FACILITY
FD B		TRENCH DRAIN	–	–	–	–	–	–	–	–	SEE PLAN IN MAINTENANCE GARAGE
OS		OIL SEPARATOR 6.3 LPS (100 GPM)	–	–	–	–					SEE PLAN IN MAINTENANCE GARAGE
GS		GREASE SEPARATOR 6.3 LPS (100 GPM)	–	–	–	–					SEE PLAN IN DINING FACILITY

NOTES:

1. SIZE OF FLOOR DRAIN WILL VARY.
2. FLOOR CLEAN-OUT SHALL BE SAME SIZE AS PIPE AS SHOWN.

AIR COMPRESSOR SCHEDULE

UNIT SYMBOL	AIR QUANTITY LMH/CFM	FULL LOAD PRESSURE kPa/PSI	NO. OF COMP.'S	MOTOR KW (HP)	ELECTRICAL DATA	STORAGE CAPACITY LITERS (GAL)	STORAGE PRESSURE kPa (PSI)	LOCATION	REMARKS
					V/PH/HZ				
AC-MG-1	855/30	1400/203	1	5.5 (7.5)	380/3/50	450 (120)	1400 (203)	MAINTENANCE GARAGE	WITH AIRCOOLED AFTER COOLER, SEPARATOR, COALESCING FILTER AND RAD-MG-01.
ACR-BG-1	855/30	1400/203	2	5.5 (7.5)	380/3/50	450 (120)	1400 (203)	CSS MAINTENANCE GARAGE	WITH AIRCOOLED AFTER COOLER, SEPARATOR, COALESCING FILTER AND RAD-MG-01.
AC-PP-1	2420/85	1400/203	1	22 (30)	380/3/50	500 (132)	1400 (203)	POWER PLANT MECH. RM 106	WITH AIRCOOLED AFTER COOLER, SEPARATOR, COALESCING FILTER .

RECIRCULATION PUMP SCHEDULE

SYMBOL	LOCATION ROOM NO.	FLOW GPM	HEAD (M)	REMARKS	HEAD
RP (D-1)	MECHANICAL (116)	5	2	1/8 HP, 220V/1ø/50HZ	(FOR DINING FACILITY)
RP (D-2)	MECHANICAL (116)	5	2	1/8 HP, 220V/1ø/50HZ	(FOR DINING FACILITY)
RP-CL-01	CLINIC (JAN-108)	5	2	1/8 HP, 220V/1ø/50HZ	(FOR MEDICAL CLINIC)
RP-CL-02	CLINIC (JAN-108)	5	2	1/8 HP, 220V/1ø/50HZ	(FOR MEDICAL CLINIC)
RP-B3-01	BACHELOR(B3)	5	2	1/8 HP, 220V/1ø/50HZ	(BACHELOR OFFICER QUARTERS BUILDING 3)
RP-LU-02	LAUNDRY	5	2	1/8 HP, 220V/1ø/50HZ	(FOR LAUNDRY)

OIL WATER SEPARATOR SCHEDULE

SYMBOL	LOCATION	FLOW L/SEC (GPM)	DIMENSIONS (NOMINAL)	REMARKS
OWS-MG-01	MAINTENANCE GARAGE	3.5 (55)	AS PER MANUFACTURE DATA SHEET	
OWS-PP-01	POWER PLANT	3.5 (55)	1067 mm X 2362 mm	
OWS-BG-01	CS & CSS MAINTENANCE GARAGE	3.5 (55)	AS PER MANUFACTURE DATA SHEET	
OWS-FB-01	FUEL STORAGE POINT	3.5 (55)	AS PER MANUFACTURE DATA SHEET	DRAWING NOT TO SCALE

DESIGNED BY: HANAN, E.	DATE: 04-11-07	SUBMITTED BY: SYED ENAYATULLA CHIEF POWER BLDG SYSTEMS	
DWN BY: HANY M.			
CHK BY: G.TAWAB	FILE NO.: AF0707CO-P-01		

US Army Corps of Engineers Transatlantic Programs Center

SYMBOL	DESCRIPTION	DATE	APR

ANA REGIONAL BRIGADE
PAKTIKA, AFGHANISTAN

STANDARD PLUMBING LEGEND AND SCHEDULES

SHEET REFERENCE NUMBER:
CO-P-01

$(getvar, "dwgprefix")$(getvar, "dwgname")$(edtime, 0, MON DD"." YYYY - H:MMam/pm)

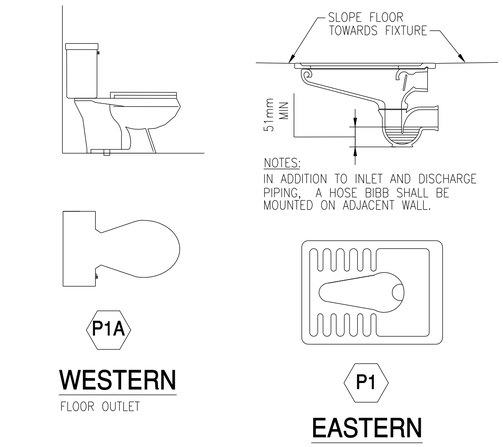

NOTES:
IN ADDITION TO INLET AND DISCHARGE PIPING, A HOSE BIBB SHALL BE MOUNTED ON ADJACENT WALL.

1 WATER CLOSET DETAIL

CO-P-02 SCALE: N.T.S

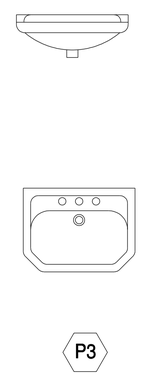

2 LAVATORY

CO-P-02 SCALE: N.T.S

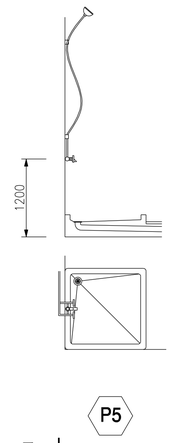

3 SHOWER

CO-P-02 SCALE: N.T.S

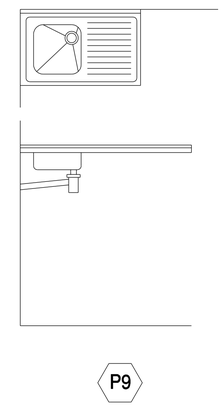

4 KITCHEN SINK

CO-P-02 SCALE: N.T.S

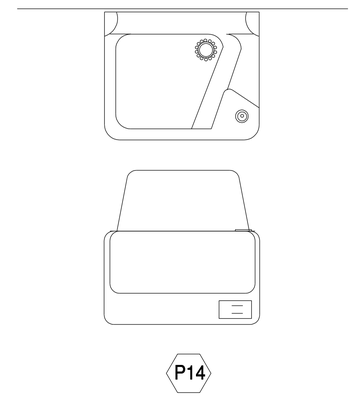

5 DRINKING FOUNTAIN

CO-P-02 SCALE: N.T.S

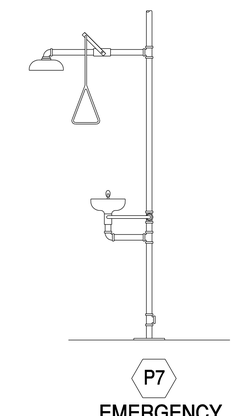

6 EMERGENCY SHOWER / EYEWASH

CO-P-02 SCALE: N.T.S

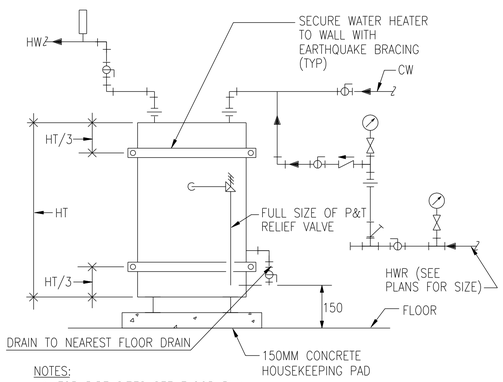

NOTES:
1-FOR PIPE SIZES SEE FLOOR PLAN.
2-FOR HEATER SELECTION SEE SCHEDULE TABLE AT DRAWING NO. (CO-P-01) AND SPECIFICATIONS.
3-SECURE WATER HEATER TO FLOOR WITH EXPANSION BOLTS, 20mm (3/4")MIN.

7 ELECTRIC WATER HEATER PIPING DETAIL

CO-P-02 SCALE: N.T.S

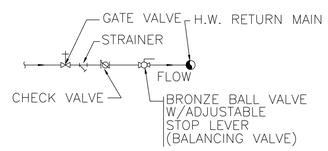

8 TYPICAL BALANCING VALVE

CO-P-02 SCALE: N.T.S

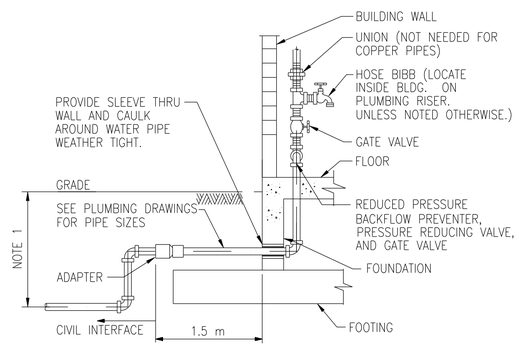

NOTE:
1. THE LEVEL OF WATER SUPPLY PIPE SHOULD BE MIN 800mm BELOW THE FINISH GRADE TO KEEP FROM FREEZING OTHER WISE ISULATION SHALL BE ADDED .

9 WATER SERVICE ENTRANCE DETAIL

CO-P-02 SCALE: N.T.S

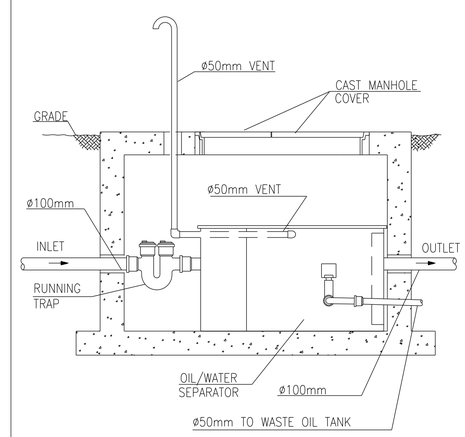

10 OIL WATER SEPARATOR

CO-P-02 SCALE: N.T.S

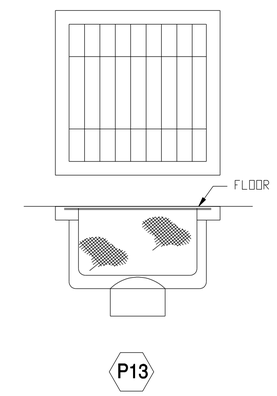

11 FLOOR SINK

CO-P-02 SCALE: N.T.S

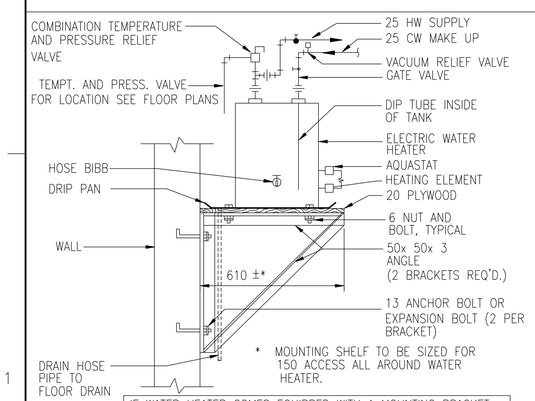

IF WATER HEATER COMES EQUIPPED WITH A MOUNTING BRACKET, CONTRACTOR WILL SUBMIT TO THE ENGINEER FOR APPROVAL, ALTERNATE INSTALLATION DETAIL AS RECOMMENDED BY HEATER MANUFACTURER FOR THE TYPE OF WALL (CMU,METAL STUD, ETC.) APPLICABLE

12 WALL MOUNTED ELECTRIC WATER HEATER DETAIL

CO-P-02 SCALE: N.T.S

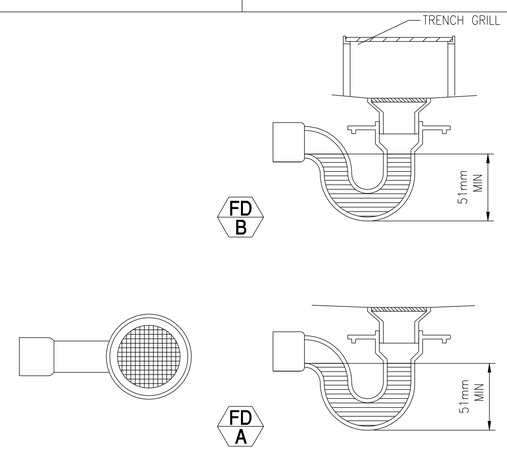

13 FLOOR DRAIN TYPE (A & B)

CO-P-02 SCALE: N.T.S

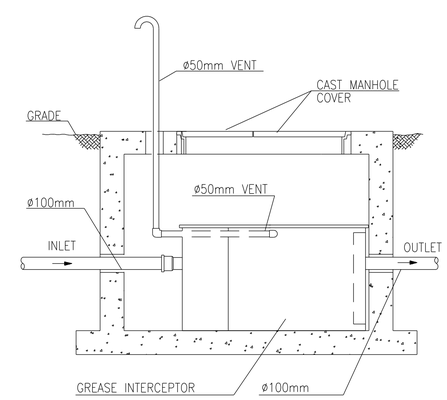

14 GREASE INTERCEPTOR

CO-P-02 SCALE: N.T.S
DRAWING NOT TO SCALE

SYMBOL	DESCRIPTION	DATE	APR

DESIGNED BY: HANNAN, E. | DATE: 04-11-07
DWN BY: HANNAN, M. | SUBMITTED BY: SYED ENAYATULLA CHIEF POTABLE BLDG SYSTEMS
CHK BY: G.TAWAB | FILE NO.: AF0707CO-P-02

US Army Corps of Engineers Transatlantic Programs Center

ANA REGIONAL BRIGADE
PAKTIKA, AFGHANISTAN
STANDARD PLUMBING DETAILS

SHEET REFERENCE NUMBER:
CO-P-02

$(getvar, "dwgprefix")$(getvar, "dwgname")$(edtime, 0, MON DD"", YYYY - H:MMam/pm)

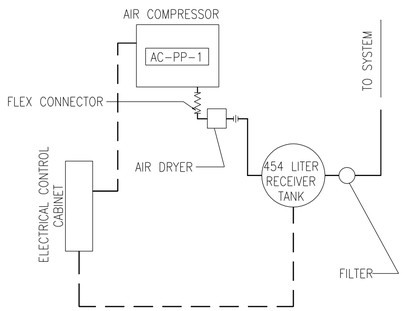

1 AIR COMPRESSOR SCHEMATIC DIAGRAM

CO-P-03 SCALE: N.T.S

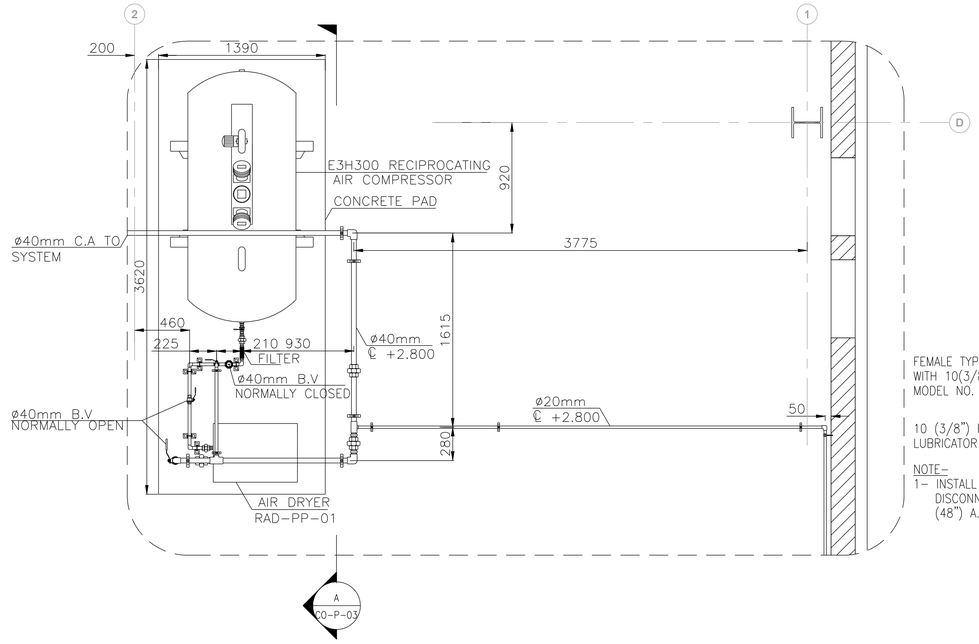

2 PLAN

CO-P-03 SCALE: 1:25

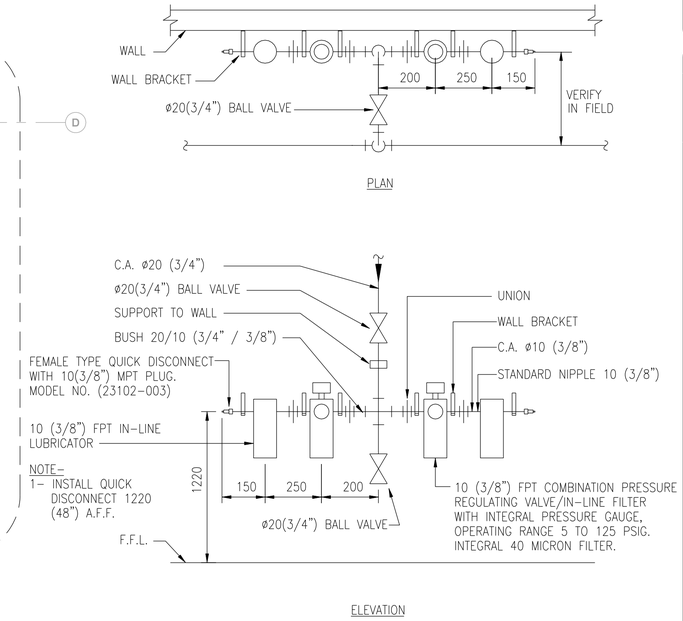

3 COMPRESSED AIR DROP DETAIL

CO-P-03 SCALE: N.T.S

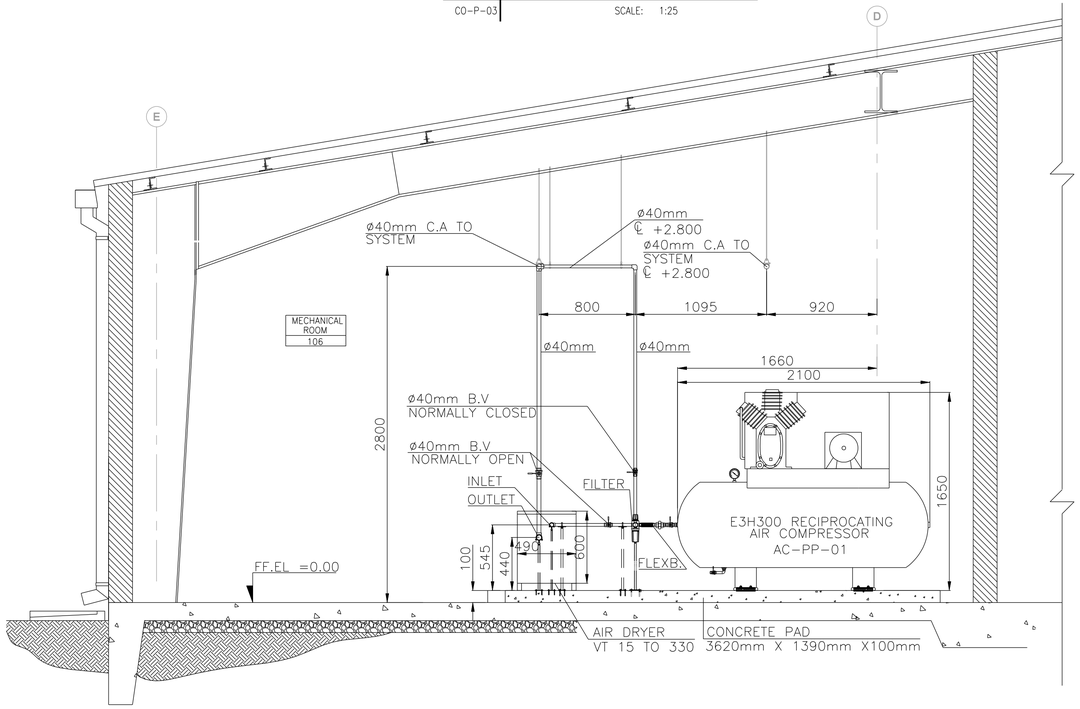

4 SECTION - A

CO-P-03 SCALE: 1:25

1 .50 0 1 1.5
1:25

DRAWING NOT TO SCALE

SYMBOL	DESCRIPTION	DATE	APR

DESIGNED BY: HANAN E. | DATE: 04-11-07
DWN. BY: HANAN M. | SUBMITTED BY: SYED ENAYATULLA, SHEET FOR BLDG SYSTEMS
CHK. BY: G.TAWAB | FILE NO.: AF0707CO-P-03

US Army Corps of Engineers Transatlantic Programs Center

ANA REGIONAL BRIGADE
PAKTIKA, AFGHANISTAN

POWER PLANT PLUMBING PLAN, SECTION AND DETAILS

SHEET REFERENCE NUMBER:
CO-P-03

$(getvar, "dwgprefix")$(getvar, "dwgname")$(edtime, 0, MON DD",". YYYY - HHMMam/pm)

NOTES:

1. LEVELS REFEREED TO 0.00 LEVEL OF (F.F.L.) =0.00MM
2. ALL DIMENSIONS IN (mm) AND LEVELS ARE IN METERS UNLESS OTHERWISE INDICATED.
3. DIMENSIONS AND LEVELS ARE TO NEAREST 5mm.

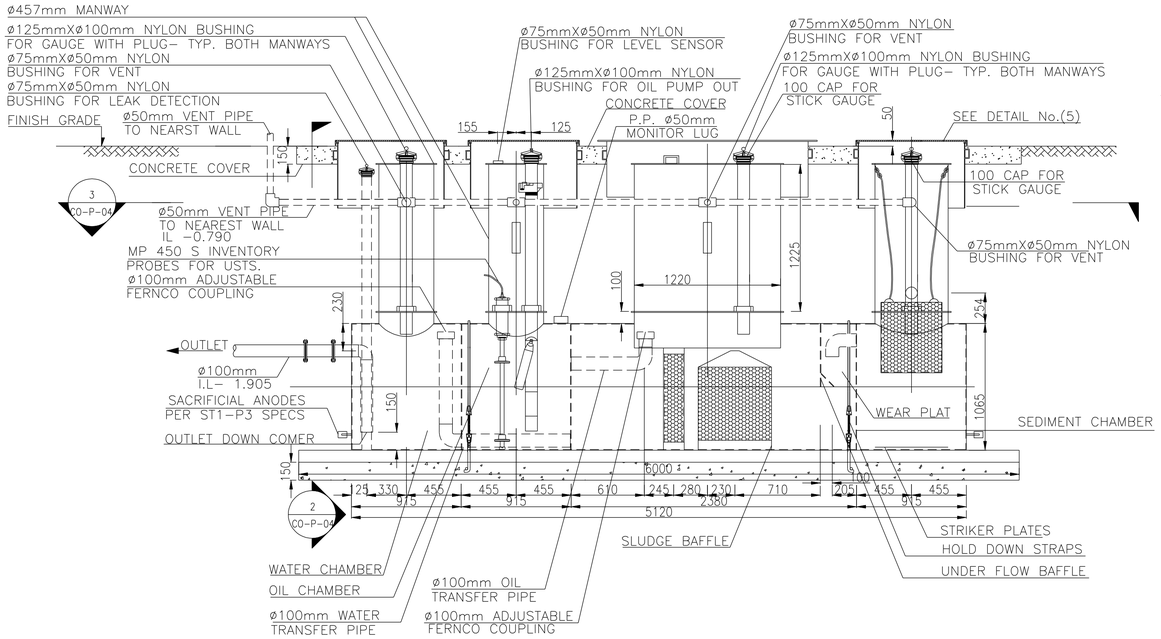

1 SECTION OIL WATER SEPARATOR

CO–P–04 SCALE: 1:25

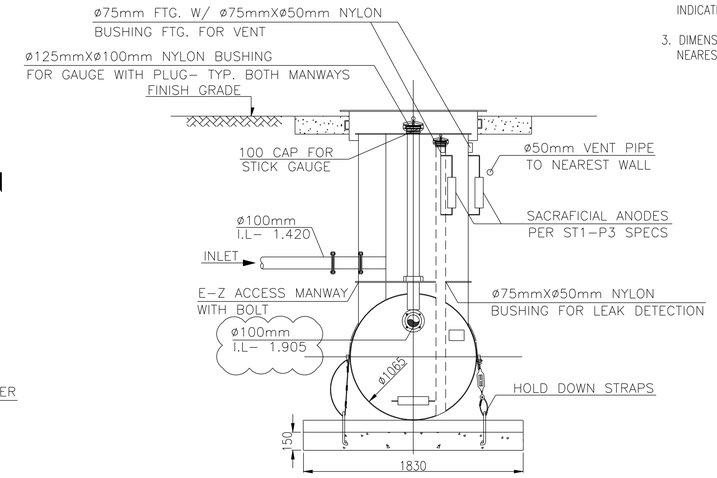

2 SECTION

CO–P–04 SCALE: 1:25

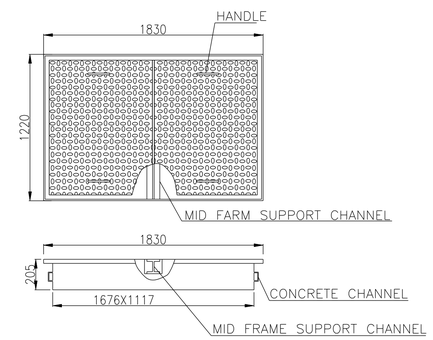

4 MANHOLE COVER

CO–P–04 SCALE: 1:25

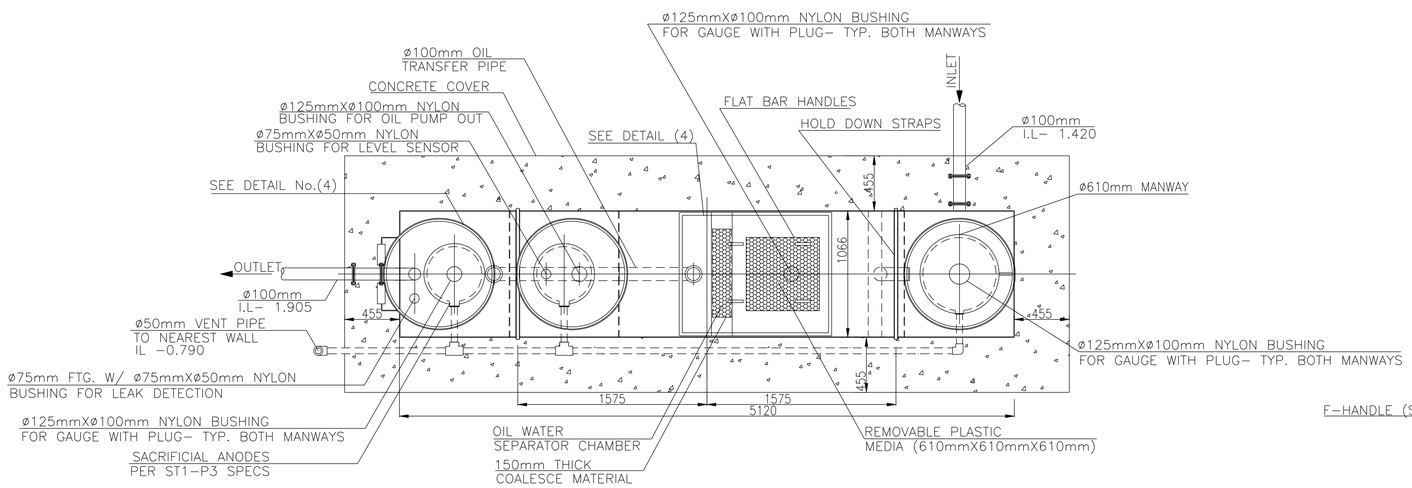

3 PLAN

CO–P–04 SCALE: 1:25

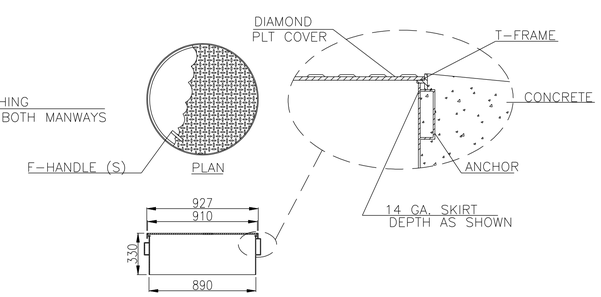

5 360 HD SERIES HEAVY DUTY SOLID COVER MANHOLES

CO–P–04 SCALE: 1:25

DRAWING NOT TO SCALE 1:25

SYMBOL	DESCRIPTION	DATE	APR

DESIGNED BY: HANAN E. | DATE: 04-11-07
DWN BY: HANA M. | SUBMITTED BY: SYED ENAYATULLA SITE ENGINEER BLDG SYSTEMS
CHK BY: G.TAWAB | FILE NO.: AF0707CO-P-04

US Army Corps of Engineers Transatlantic Programs Center

ANA REGIONAL BRIGADE
PAKTIKA, AFGHANISTAN

POWER PLANT
OIL WATER SEPARATOR PLAN, SECTION AND DETAIL

SHEET REFERENCE NUMBER:
CO–P–04

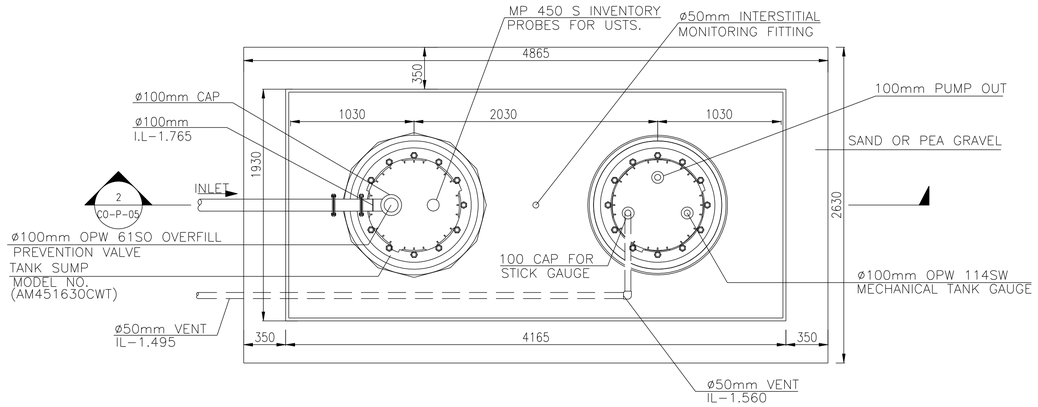

1 PALN

CO-P-05 SCALE: 1:25

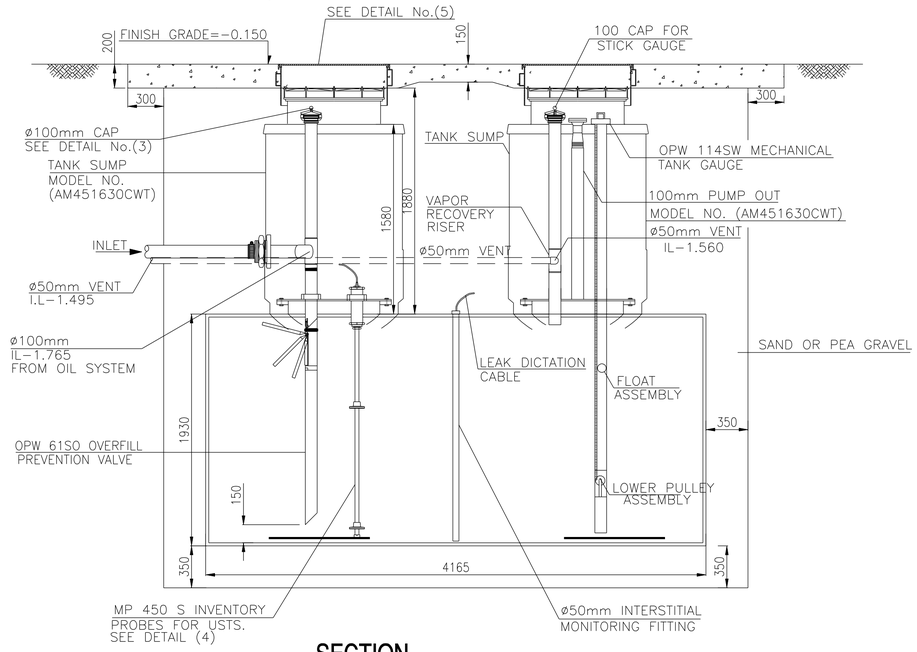

2 SECTION WOT-PP-01

CO-P-05 SCALE: 1:25

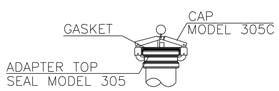

3 CAP DETAIL

CO-P-05 SCALE: 1:25

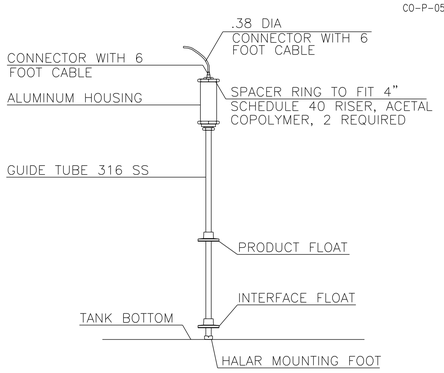

4 DETAIL MP 450 S INVENTORY PROBES FOR USTS

CO-P-05 SCALE: N.T.S

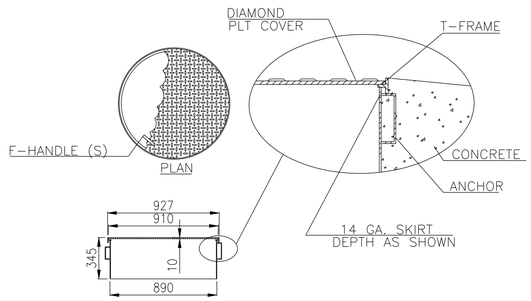

5 DETAIL 360 HD SERIES HEAVY DUTY SOLID COVER MANHOLES

CO-P-05 SCALE: N.T.S

DRAWING NOT TO SCALE 1:25

NOTES:

1. LEVELS REFERED TO 0.00 LEVEL (F.F.L.) OF POWER PLANT BUILDING =0.00MM
2. ALL DIMENSIONS IN (mm) AND LEVELS ARE IN METERS UNLESS OTHERWISE INDICATED.
3. DIMENSIONS AND LEVELS ARE TO NEAREST 5mm.

SYMBOL	DESCRIPTION	DATE	APR

DESIGNED BY: HANAAN E.
DWN BY: HANY M.
CHK BY: G.TAWAB
DATE: 04-11-07
SUBMITTED BY: SYED ENAYATULLA CHIEF POL BLDG SYSTEMS
FILE NO.: AF0707CO-P-05

US Army Corps of Engineers Transatlantic Programs Center

ANA REGIONAL BRIGADE
PAKTIKA, AFGHANISTAN

POWER PLANT
WASTE OIL STORAGE TANK
PLAN, SECTION AND DETAIL

SHEET REFERENCE NUMBER:
CO-P-05

$(getvar, "dwgprefix")$(getvar, "dwgname")$(edtime, 0, MON DD",".YYYY - HHMMam/pm)

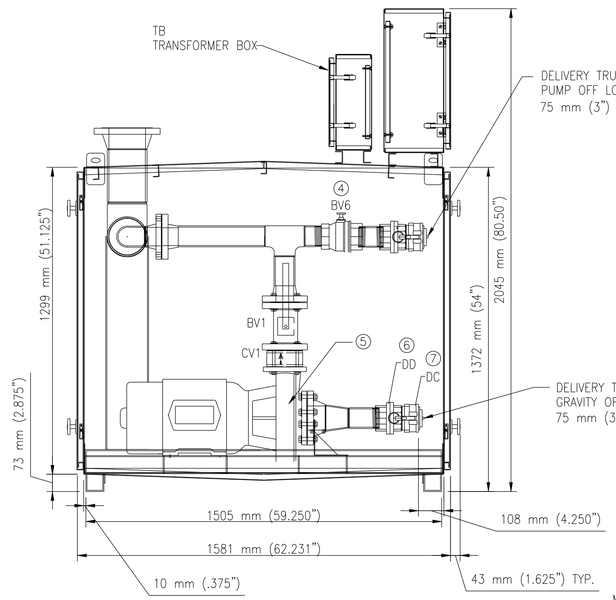

LEFT VIEW

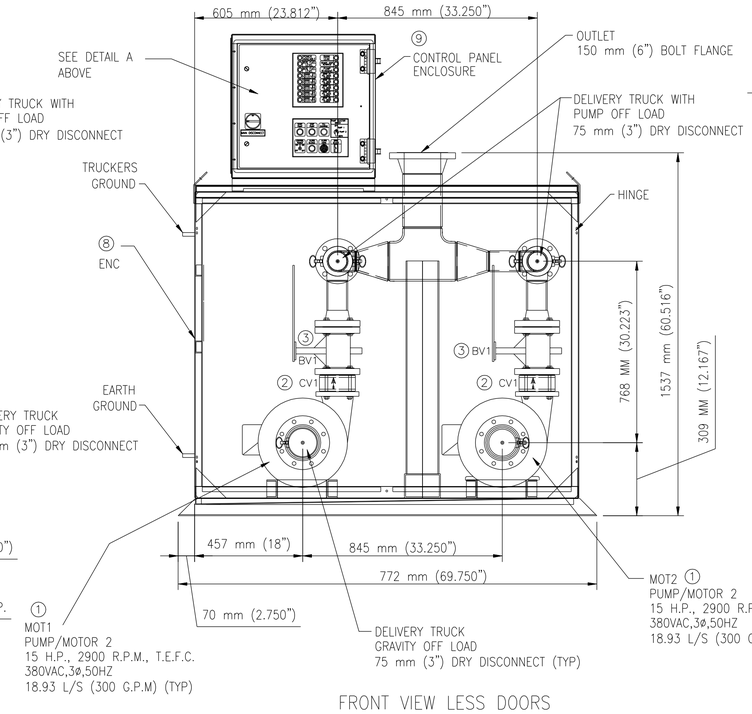

FRONT VIEW LESS DOORS

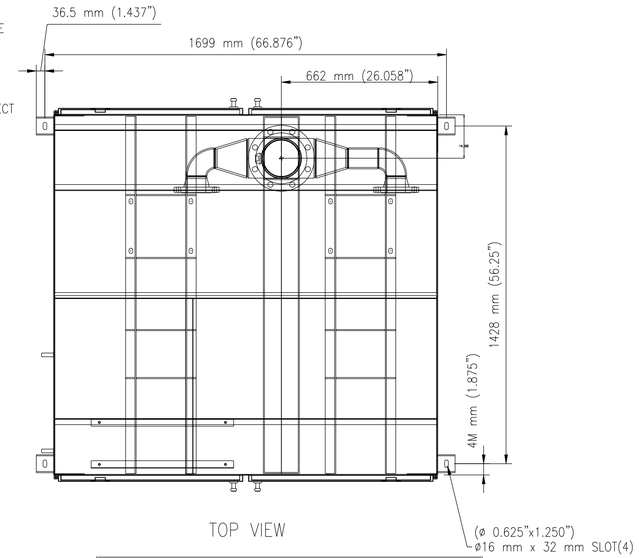

TOP VIEW

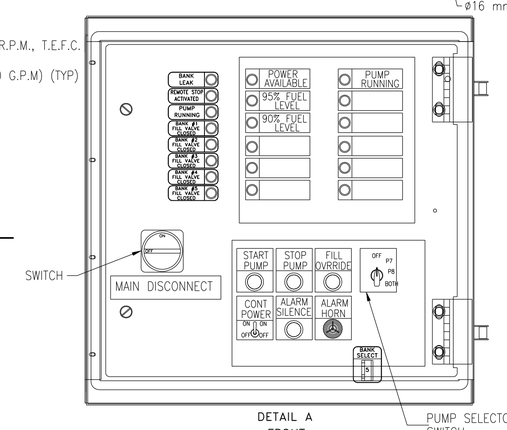

DETAIL A
FRONT
COVER OPEN

ITEM	DESIGNATOR	DISCRIPTION
①	MOT1 MOT2	PUMP MOTOR, 15 H.P. 380VAC,3ø,50HZ
②	CV1	CHECK VALVE, 75 mm (3.00") BOLT FLANGE
③	BV1	75 mm (3.00") BALL VALVE, BOLT FLANGE
④	BV6	75 mm (3.00") BALL VALVE, NPT
⑤	PUMP	PUMP, 18.93 L/s (300 GPM) @ 24.4 M HEAD (80' HEAD)
⑥	DD	DRY DISCONNECT COUPLING 75 mm (3.00") , NPT
⑦	DC	DUST CAP FROM ABOVE 69 kPa (10PSI)
⑧	ENC	PUMP ENCLOSURE, MATERIAL 12 GA HRS, PHOSPHATIZED STEEL, ENCLOSURE COLOR WHITE, NEMA 3R RATED.
⑨	ENC	PUMP CONTROL PANEL ENCLOSURE, MATERIAL MATERIAL 12 GA HRS, PHOSPHATIZED STEEL, ENCLOSURE COLOR WHITE, NEMA 3R RATED.

1 PUMPS P-3 AND P-4 DETAIL

CO-P-06 SCALE: N.T.S

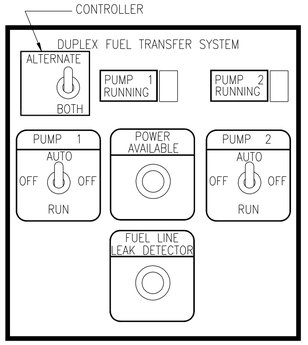

DETAIL A

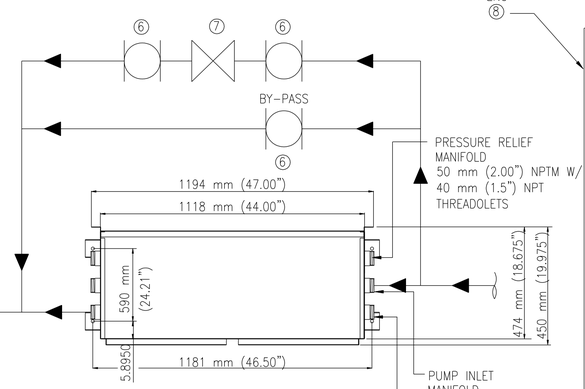

TOP VIEW LESS DOORS

ITEM	DESIGNATOR	DISCRIPTION
①	MOT1 MOT2	PUMP MOTOR, 1.5 H.P. 380VAC,3ø,50HZ 2.9 FULL LOAD AMPS
②	CV	CHECK VALVE, 40 mm (1.50") NPT.
③	PRV	PRESSURE RELIEF VALVE 40 mm (1.5") NPT, SET @ 450 kPa (65 PSI)
④	FSR	FUEL STRAINER 40 mm (1.5") NPT, 40 MESH
⑤	PUMP	PUMP, 1.26 L/s (20.1 GPM) @ 1475 RPM
⑥	BV	BALL VALVE, 40 mm (1.5" NPT)
⑦	BPV	BACK PRESSURE VALVE, 40 mm (1.5") NPT, 69 kPa (10PSI)
⑧	ENC	PUMP ENCLOSURE, MATERIAL 12 GA HRS, PHOSPHATIZED STEEL, ENCLOSURE COLOR WHITE, NEMA 3R RATED.

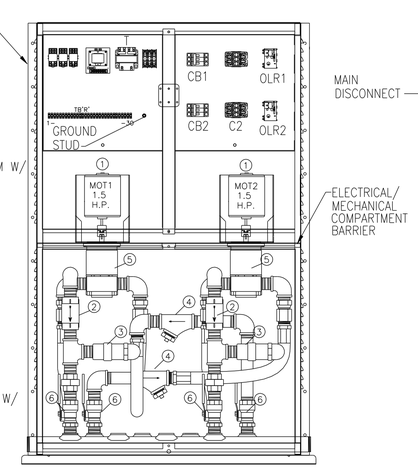

FRONT VIEW
LESS DOORS

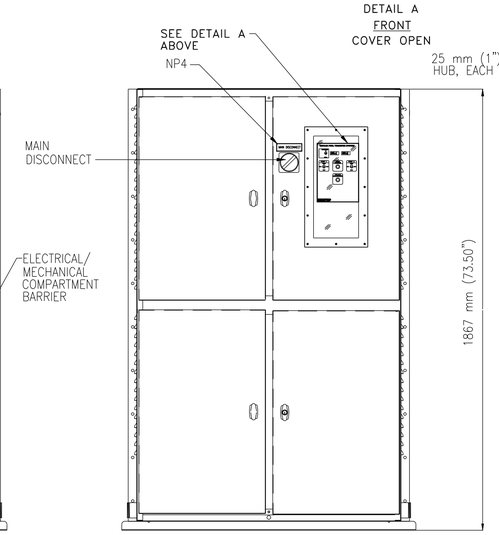

FRONT VIEW

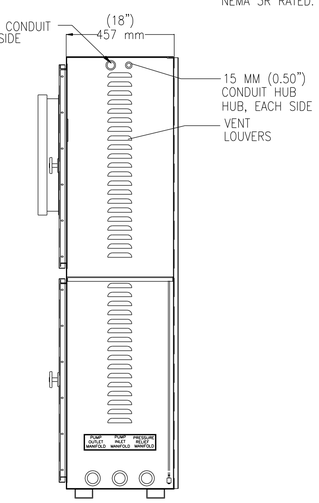

RIGHT SIDE
VIEW

2 PUMPS P-1 AND P-2 DETAIL

CO-P-06 SCALE: N.T.S

DRAWING NOT TO SCALE

SYMBOL	DESCRIPTION	DATE	APR

DESIGNED BY: HANXXX E.
DWN BY: HANXXM.
CHK BY: G.TAWAB
DATE: 04-11-07
SUBMITTED BY: SYED ENAYATULLA CHIEF, BLDG SYSTEMS
FILE NO.: AF070/CO-P-06

US Army Corps of Engineers Transatlantic Programs Center

ANA REGIONAL BRIGADE
PAKTIKA, AFGHANISTAN

POWER PLANT
PUMPS P-01, P-02 ,
P-03 AND P-04 DETAILS

SHEET REFERENCE NUMBER:
CO-P-06

$(getvar, "dwgprefix")$(getvar, "dwgname")$(edtime, 0, MON DD",", YYYY - HH:MMam/pm)

PLUMBING LEGEND

SYMBOL	DESCRIPTION
AV	ANGLE VALVE
BV	BALL VALVE
CV	CHECK VALVE
	COCK VALVE
DV	DRAIN VALVE
P7	EMERGENCY SHOWER AND EYE-WASH
FCO	FLOOR CLEANOUT
FD	FLOOR DRAIN
FS	FLOOR SIPHON
P13	FLOOR SINK (FS)
	GALITRAP (GT)
GV	GATE VALVE
HB	HOSE BIBB, PLAN
	INSPECTION MANHOLE
	PIPE TURNING DOWN
	PIPE TURNING UP
CO	PLUG CLEANOUT
	REDUCER-INCREASER
	SUPPORT LOCATION
	Y-TYPE STRAINER
U	UNION
WHA	WATER HAMMER ARRESTOR
VRV	VACUUM RELIEF VALVE

ABBREVIATION	DESCRIPTION
AC	AIR COMPRESSOR
℄	CENTER LINE
CA	COMPRESSED AIR
COYB	CLEANOUT IN YARD BOX
CW	COLD WATER PIPES
DT	DAY TANK
FOR	FUEL OIL RETURN
FOS	FUEL OIL SUPPLY
FT	FLASH TANK
H/L	HIGH LEVEL
HW	HOT WATER PIPES
IC	INSPECTION CHAMBER
I.L	INVERT LEVEL
LD	LEAK DETECTOR
L/L	LOW LEVEL
LSH	LEVEL SWITCH HIGH
LSHH	LEVEL SWITCH HIGH HIGH
LSL	LEVEL SWITCH LOW
LSLL	LEVEL SWITCH LOW LOW
LT	LEVEL TRANSMITTER
OW	OILY WASTE
OWS	OIL WATER SEPARATOR
P	PUMP
RP	RECIRCULATION PUMP
YCO	YARD CLEAN OUT
WOT	WASTE OIL STORAGE TANK
NT	NEUTRALIZATION TANK
GS	GREASE INTERCEPTOR

ABBREVIATION	DESCRIPTION
SP	SOIL PIPE
SR	SHORT RADIUS
U.G.	UNDER GROUND
VP	VENT PIPE
V.R.V	VACUUM RELIEF VALVE
WCO	WALL CLEANOUT
WHA	WATER HAMMER ARRESTOR
WO	WASTE OIL
WP	WASTE PIPE

LINE STYLE	DESCRIPTION
	COLD WATER (CW)
	HOT WATER (HW)
	VENT PIPE (VP)
	SOIL PIPE (SP)
	WASTE PIPE (WS)
	HOT WATER RETURN (HWR)
CA	COMPRESSED AIR

EQUIPMENT IDENTIFICATION

EWH-XX-XX
- ELECTRIC WATER HEATER
- UNIT NUMBER
- BUILDING ABBREVIATION

WATER HAMMER ARRESTOR SIZING CHART

P.D.I. SYMBOL	FIXTURE UNIT RATING	NIPPLE SIZE (MM)
A	1-11	20
B	12-32	25
C	33-60	25

NOTES:

1. INTERIOR SOIL AND WASTE PIPING 80 (3") AND SMALLER SHALL BE ROUTED WITH A 2% SLOPE. INTERIOR SOIL AND WASTE PIPING 100 (4") AND LARGER SHALL BE ROUTED WITH A MINIMUM 1% SLOPE.
2. EXTERIOR SOIL OR WASTE PIPING SHALL BE ROUTED WITH A 2% SLOPE WHEREVER POSSIBLE, OTHERWISE A MINIMUM SLOPE OF 1% SHALL BE USED.
3. WATER AND DRAINAGE PIPING SHALL BE EXTENDED 1.5 m OUTSIDE THE BUILDING UNLESS OTHERWISE INDICATED

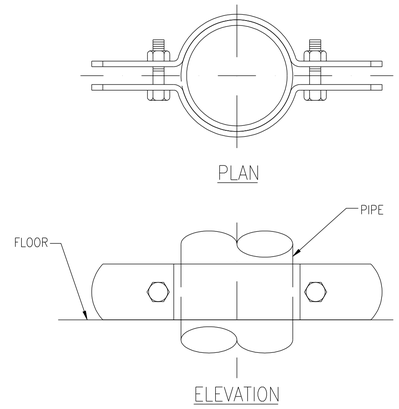

1 PIPE RISER CLAMP DETAIL

CO-P-07 SCALE: N.T.S

PIPE SIZE	SIZE OF STEEL UPPER	SIZE OF STEEL LOWER	A	B	C	ROD TAKE OUT E	G	ADJUST-MENT	MAX. SPACING BET. HANGERS
15	3.2x25.4	3.2x25.4	9.5	50	62	33	6.35	9.5	2400
20	3.2x25.4	3.2x25.4	9.5	52	65.1	35	6.35	13	2700
25	3.2x25.4	3.2x25.4	9.5	59	80	41.2	6.35	16	2700
32	3.2x25.4	3.2x25.4	9.5	60	82.6	43	6.35	16	2700
40	3.8x25.4	3.2x25.4	9.5	71	71.4	54	6.35	22	3700
50	3.8x25.4	3.2x25.4	9.5	84	114.3	66.7	6.35	28.5	4000
65	4.8x31.7	4.8x31.7	13	103	139.7	81	9.5	33	4300
80	4.8x31.7	4.8x31.7	13	209	166.7	100	9.5	46	4600

NOTE :
(1) ALL DIMENSIONS ARE IN mm

HEAVY DUTY CLEVIS HANGER FOR COMP. AIR PIPE

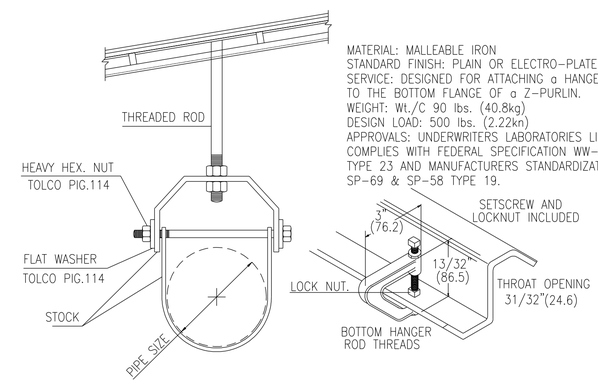

MATERIAL: MALLEABLE IRON
STANDARD FINISH: PLAIN OR ELECTRO-PLATED
SERVICE: DESIGNED FOR ATTACHING a HANGER ROD TO THE BOTTOM FLANGE OF a Z-PURLIN.
WEIGHT: Wt./C 90 lbs. (40.8kg)
DESIGN LOAD: 500 lbs. (2.22kn)
APPROVALS: UNDERWRITERS LABORATORIES LISTED
COMPLIES WITH FEDERAL SPECIFICATION WW-H-171E TYPE 23 AND MANUFACTURERS STANDARDIZATION SOCIETY SP-69 & SP-58 TYPE 19.

2 PIPE HANGER DETAIL

CO-P-07 SCALE: N.T.S

COLUMN		1		2		3		4		5	6	7
NOMINAL PIPE OR TUBING DIAMETER		STANDARD WEIGHT STEEL PIPE				COPPER TUBE				CAST OR DUCTILE IRON PRES	CAST IRON SOIL	PLASTIC
		WATER SERVICE		VAPOR SERVICE		WATER SERVICE		VAPOR SERVICE				
in	mm	ft	m	ft	m	ft	m	ft	m			
1/4	6	7	2.1	8	2.4	5	1.5	5	1.5	12 ft (3.7m) MAX SPACING; MIN OF ONE HANGER PER PIPE SECTION CLOSE TO JOINT ON BARREL. ALSO AT CHANGE OF DIRECTION AND BRANCH CONNECTIONS.	10 ft (3.0m) MAX SPACING; MIN OF ONE HANGER PER PIPE SECTION CLOSE TO JOINT ON BARREL. ALSO AT CHANGE OF DIRECTION AND BRANCH CONNECTIONS.	FOLLOW PIPE MANUFACTURER'S RECOMMENDATIONS FOR MATERIAL AND SERVICE TEMPERATURE.
3/8	10	7	2.1	8	2.4	5	1.5	6	1.8			
1/2	13	7	2.1	8	2.4	5	1.5	6	1.8			
3/4	20	7	2.1	9	2.7	5	1.5	7	2.1			
1	25	7	2.1	9	2.7	6	1.8	8	2.4			
1-1/4	30	7	2.1	9	2.7	7	2.1	9	2.7			
1-1/2	40	9	2.7	12	3.7	8	2.4	10	3.0			
2	50	10	3.0	13	4.0	8	2.4	11	3.4			
2-1/2	65	11	3.4	14	4.3	9	2.7	13	4.0			
3	75	12	3.7	15	4.6	10	3.0	14	4.3			
4	100	14	4.3	17	5.2	12	3.7	16	4.9			
5	125	16	4.9	19	5.8	13	4.0	18	5.5			
6	150	17	5.2	21	6.4	14	4.3	20	6.1			
8	305	19	5.8	24	7.3							
10	255	22	6.1	26	7.9							
12	305	23	7.0	30	9.1							
14	355	25	7.6	32	9.8							
16	405	27	8.2	35	10.7							

3 TABLE 1 MAXIMUM HORIZONTAL PIPE HANGER AND SUPPORT SPACING

CO-P-07 SCALE: N.T.S

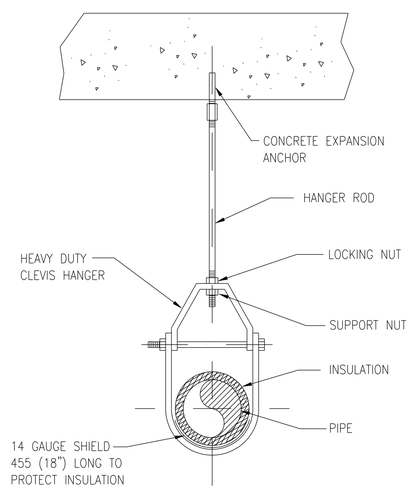

4 CLEVIS HANGER DETAIL

CO-P-07 SCALE: N.T.S

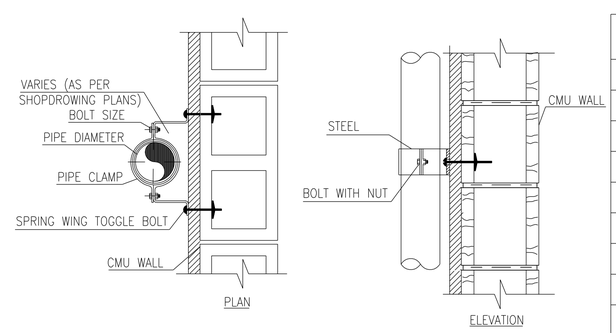

PIPE SIZE (mm)	BOLT SIZE	H (mm)	STEEL SIZE (mm)
15	2XM10X40	11.1	(4.8x31.7)
20	2XM10X40	11.1	(4.8x31.7)
25	2XM10X40	11.1	(4.8x31.7)
32	2XM10X40	11.1	(4.8x31.7)
40	2XM10X40	11.1	(6.3x31.7)
50	2XM10X45	11.1	(6.3x31.7)
65	2XM10X45	11.1	(6.3x31.7)
80	2XM10X45	11.1	(6.3x31.7)
100	2XM12X50	14.3	(6.3x38.1)
125	2XM12X60	14.3	(6.3x38.1)

5 OFFSET PIPE CLAMPS DETAIL

CO-P-07 SCALE: N.T.S

DRAWING NOT TO SCALE

SYMBOL	DESCRIPTION	DATE	APR

DESIGNED BY: HANAN E. | DATE: 04-11-07
DWN BY: HANAN M. | SUBMITTED BY: SYED ENAYATULLA CHIEF POL BLDG SYSTEMS
CHK BY: G.TAWAB | FILE NO.: AF070TCO-P-07

US Army Corps of Engineers Transatlantic Programs Center

ANA REGIONAL BRIGADE
PAKTIKA, AFGHANISTAN

STANDARD PLUMBING LEGEND
CHARTS AND NOTES

SHEET REFERENCE NUMBER:
CO-P-07

$(getvar, "dwgprefix")$(getvar, "dwgname")$(edtime, 0, MON DD", YYYY - HH:MMam/pm)

LIGHTING LEGEND:

	ONE LAMP FLUORESCENT L.F. SEE SHEET CO-E-02 FOR L.F. SCHEDULE
	TWO LAMPS FLUORESCENT L.F. SEE SHEET CO-E-02 FOR L.F. SCHEDULE
	FOUR LAMPS FLUORESCENT L.F. SEE SHEET CO-E-02 FOR L.F. SCHEDULE
a	FLOOD LIGHT WITH 400W HIGH PRESSURE SODIUM LAMP 220V,50HZ WALL MOUNTED
b	6METER, LIGHTING POLE WITH 400W HIGH PRESSURE SODIUM LAMP FLOOD LIGHT 220V , 50HZ
c	FLOOD LIGHT WITH 70W HIGH PRESSURE SODIUM LAMP 220V, 50HZ WALL MOUNTED
	MIRROR WALL MOUNTED LIGHT FIXTURE
	WALL MOUNTED COMPACT FLUORESCENT L.F.
	PENDANT MOUNTED INDUSTRIAL, HIGH BAY L.F; VAPOR PROOF INCANDESCENT. SEE SHEET CO-E-02 FOR L.F. SCHEDULE
X1	SURFACE (WALL/CELING)ONE FACE EXIT SIGN WITH BACK UP BATTERY.
X2	WALL MOUNTED EMERGENCY LIGHT WITH BACK UP BATTERY.
D	DIMMING SWITCH, 220V, 16AMP MOUNTED HEIGHT = 1300mm ABOVE FINISH FLOOR LEVEL FROM THE CENTER OF SWITCH
	ONE WAY SWITCH, 220V, 16AMP MOUNTED HEIGHT = 1300mm ABOVE FINISH FLOOR LEVEL FROM THE CENTER OF SWITCH
3	3 WAY SWITCH, 220V, 16AMP MOUNTED HEIGHT = 1300mm ABOVE FINISH FLOOR LEVEL FROM THE CENTER OF SWITCH
4	4 WAY SWITCH, 220V, 16AMP MOUNTED HEIGHT = 1300mm ABOVE FINISH FLOOR LEVEL FROM THE CENTER OF SWITCH

LIGHT FIXTURE NOTES:

1. ALL PENDANT MOUNTED FIXTURES ARE TO INCLUDE MANUFACTURERS "BALL-HANGER" TYPE CANOPY TO COMPENSATE FOR ROOF PITCH. FIELD CUT TO LENGTH.
2. ALL LIGHTING FIXTURES TO BE PROVIDED WITH "STANDARD" HIGH POWER FACTOR "MAGNETIC" BALLASTS, UNLESS NOTED OTHERWISE.

LINE TYPE:

————————	EXPOSED CONDUIT (EMT)
- - - - - - - -	EMBEDDED OR CONCEALED CONDUIT ABOVE FALSE CEILING
- - -L- - - -	LIGHTNING PROTECTION CONDUCTOR

ABBREVIATIONS:

A	AMP	L.C.	LIGHTING CONTACTOR
A.H.U.	AIR HANDLING UNIT	L.F.	LIGHT FIXTURE
A/C	AIR CONDITIONING	LPI	LIGHTNING PROTECTION INSTITUTE
A.C.U.	AIR CONDITION UNIT	M	METER
A.F.F.	ABOVE FINNISH FLOOR LEVEL	MAX	MAXIMUM
C	CONDUIT	MD	MOTORIZE DAMPER
CB	CIRCUIT BREAKER	MECH	MECHANICAL
CHH	COMMUNICATION HANDHOLE	MLO	MAIN LUGS ONLY
C.L.	CENTERLINE	mm	MILLIMETER
C.O.E.	CORE OF ENGINEERS	P.A.C.U.	PACKAGE AIR CONDITION UNIT
CU	CONDENSING UNIT	PVC	POLYVINYL CHLORIDE
ø, DIA	DIAMETER	RM	ROOM
EF	EXHAUST FAN	SF	SUPPLY FAN
EHH	ELECTRICAL HANDHOLE	S.U.	SPLIT UNIT
EMT	ELECTRIC METALLIC TUBING	TRANS	TRANSFORMER
EWH	ELECTRICAL WATER HEATER	TTC	TELEPHONE TERMINAL CABINET
FACP	FIRE ALARM CONTROL PANEL	TYP	TYPICAL
GFI	GROUND FAULT INTERRUPTER	TV	TELEVISION
		U.O.N.	UNLESS OTHERWISE NOTED

POWER LEGEND:

	ELECTRICAL PANEL BOARD, SEE NOTE 4
MDP	MAIN DISTRIBUTION PANEL (MDP)
	NON FUSED DISCONNECT SWITCH ,220V ,50HZ ,20A (U.O.N)
	COMBINATION MOTOR STARTER SWITCH ,220V ,50HZ ,20A (U.O.N)
M	MANUAL MOTOR STARTER, WITH OVER LOAD PROTECTION RATING AS REQUIRED BY EXHAUST FAN MANUFACTURER MOUNTED HEIGHT = 1300mm ABOVE FINISH FLOOR LEVEL
3M	MOTOR RATED 3-SPEED SWITCH FOR CEILING FAN, 220V, 20AMP MOUNTED HEIGHT = 1300mm ABOVE FINISH FLOOR LEVEL
	RECESSED MOUNTED DUPLEX RECEPTACLES 1PH, 240V, 16A, 50HZ GROUNDING DIN TYPE. MOUNTING HEIGHT = 450mm ABOVE FINISH FLOOR LEVEL
GFI	RECESSED MOUNTED SINGLE RECEPTACLES 1PH, 240V, 16A, 50HZ GROUNDING DIN TYPE WITH GROUND FAULT INTERRUPTER AND SWITCH. MOUNTING HEIGHT =1300mm ABOVE FINISH FLOOR
CEE	RECESSED MOUNTED DUPLEX RECEPTACLES 3PH, 380V, 30A, 50HZ GROUNDING DIN TYPE MOUNTING HEIGHT =450mm ABOVE FINISH FLOOR
G	RECESSED MOUNTED DUPLEX RECEPTACLE LABEL INDICATE (HOSPITAL GRAD) 1PH, 240V, 16A, 50HZ GROUNDING DIN TYPE . MOUNTING HEIGHT =500mm ABOVE FINISH FLOOR INSULATED 4mm GROUNDING WIRE PER EACH RECEPTACLE
	SINGLE POWER SOCKET OUTLET, 220V, 50HZ, 20A MOUNTING HEIGHT = 450mm (U.O.N.)
PB	100mm x 100mm PULL BOX.
JB	100mm x 100mm JUNCTION BOX
C.B	CIRCUIT BREAKER 30 AMP , 3 POLE , 380V , 50HZ
M	MOTORIZE DAMPER
REL	RELAY PANEL
M	MOTOR
	CEILING FAN
B 60-12	DETAIL DESIGNATION, TOP NUMBER INDICATE DETAIL NUMBER, BOTTOM LETTER INDICATES DRAWING NUMBER

LOW CURRENT LEGEND:

TTC	TELEPHONE TERMINAL CABINET, SEE NOTE 3
	EQUIPMENT AS IDENTIFIED ON PLANS
	TELPHONE/DATA OUTLET DUPLEX, RJ-45, 4 PAIR CATEGORY 5E, SEE NOTE 2 & 5
FP	FIRE ALARM BOX FOR FUTURE INSTALLATION OF SELF SMOKE DETECTOR
	TELEPHONE OUTLET ,RJ-45,4 PAIR CATEGORY 5E, SEE NOTE # 2 , 5

GROUNDING LEGEND:

	3 METER LENGTH , 20mm DIAMETER , COPPER GROUNDING ROD
- - -	UNDERGROUND BARE COPPER CONDUCTOR FOR CONNECTION BETWEEN GROUNDING RODS SIZE AS INDICATED ON THE PLAN
T	T-SPLICE EXOTHERMIC WELD
	AIR TERMINAL

ABBREVIATIONS:

GRS	GALVANIZED RIGID STEEL	V	VOLT
HZ	HERTZ	W	WATT, WIRE
IR	IMPULSE RELAY	WP	WEATHER PROOF
IL	INVERTED LEVEL	WR	WELDING RECEPTACLE
UTP	UNSHIELDED TWISTED PAIR	RP	RECALCULATION PUMP
N.F.D.S	NON FUSED DISCONNECT SWITCH		
PH	PHASE		
P	POLE		

TAG SYMBOLS

	SECONDARY FEEDER TAG SYMBOL	INFORMATION IS LISTED IN THE TAG SYMBOL THUS:- 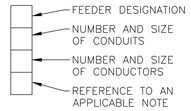 -CONDUIT SIZE INDICATED ALONE -DENOTES A SINGLE CONDUIT -CONDUIT SIZE MAY BE REDUCED AS LONG AS THE 40% FILL REQUIREMENT OF THE NEC ARE MAINTAINED
	SECONDARY INDIVIDUALLY MOUNTED OVERCURRENT AND/OR SWITCHING DEVICE TAG SYMBOL	INFORMATION IS LISTED IN THE TAG SYMBOL THUS:- "100" OR "250" INDICATES VOLTAGE RANGE AT WHICH DEVICE IS TO OPERATE; "2", "3", "3-N" ETC. INDICATES "2" POLE "3" POLE, 3 POLE PLUS NEUTRAL, ETC. 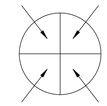 DEVICE SIZE IN AMPERES; "U" INDICATES THAT NO OVERCURRENT PROTECTION IS REQUIRED-- NUMBER INDICATES SIZE OF OVERCORRENT PROTECTION REQUIRED INDIVIDUALLY MOUNTED OVERCURRENT AND SWITCHING DEVICES ARE FOR SURFACE MOUNTING UNLESS THE TAG SYMBOL CARRIES AN EXTERNAL SUBSCRIPT "F" INDICATING FLUSH MOUNTING.
	INDEXING SYMBOL	HEXAGONAL SYMBOLS CONTAINING UPPER CASE LETTERS WITH OR WITHOUT NUMBERS INDICATE REFERENCE TO A LEGEND OR INDEX OF SPECIAL EQUIPMENT HEXAGONAL SYMBOLS CONTAINING NUMBERS ONLY INDICATE REFERENCE TO AN EXPLANATION OF ELECTRIC WORK REQUIREMENTS.

GENERAL NOTES:

1. MOUNTING HEIGHT OF SWITCHES 1.3M AFF UNLESS OTHERWISE NOTED.
2. MOUNT RECEPTACLES AND TELPHONE/DATA OUTLETS 450mm AFF UNLESS OTHERWISE NOTED.
3. MOUNT TELEPHONE TERMINAL CABINET (TTC) 1800mm FROM THE TOP OF CABINET TO FLOOR.
4. MOUNT ELECTRICAL PANELS 1800mm A.F.F. TO THE TOP OF THE PANEL.
5. TELEPHONE/DATA CABLE SHALL BE CAT 5E, 4 PAIRS
6. FOR EXACT LOCATION OF MECHANICAL EQUIPMENT REFER TO MECHANICAL DESIGN DRAWINGS.
7. EQUIPMENT SHALL BE RATED FOR 40 DEGREES C AND 2000 METERS (ABOVE SEA LEVEL)ELEVATION
8. THE GROUNDING RESISTANCE SHALL BE NO HIGHER THAN 25 OHMS , EXCEPT IN THE UPS AND EQUIPMENT ROOM SHALL BE 5 OHMS MEASURED MIN OF 48 HRS AFTER RAINFALL, ADDITIONAL RODS SHOULD BE USED TO ACHIEAVED THE REQUIRED RESISTANCE
9. ALL LIGHT FIXTURES SHALL BE SEISMIC ALLY BRACED.
10. ALL PANEL BOARDS SHALL BE RATED FOR A MINIMUM 25 KAIC UNLESS OTHERWISE NOTED ON THE DRAWING.
11. THE ELECTRICAL WIRING SHOWN ON PLAN DRAWINGS IS DIAGRAMMATIC AND INTENDED TO IDENTIFY THE CIRCUIT ARRANGEMENT FOR EACH AREA. THE CONDUIT CAN BE COMBINED FOR DIFFERENT CIRCUITS, PROVIDED THE INSTALLATION MEETS THE NEC, WITH NO MORE THAN 3 CONNECTIVE CIRCUITS IN ANY CONDUIT, SUCH AS 1, 3, 5 OR 2, 4, 6, ETC. THE 3 CIRCUITS CAN SHARE ONE NEUTRAL CONDUCTOR.

DRAWING NOT TO SCALE

SYMBOL	DESCRIPTION	DATE	APR

DESIGNED BY: MANAXL.L.
DATE: 04-11-07
DWN. BY: NAGY.S.
SUBMITTED BY: SYED ENAYATULLA SHEF, EDT BLDG SYSTEMS
CHK BY: SHERINE S.
FILE NO.: AF070700-E-01

US Army Corps of Engineers Transatlantic Programs Center

ANA REGIONAL BRIGADE
PAKTIKA, AFGHANISTAN

ELECTRICAL GENERAL LEGEND, NOTES ABBREVIATIONS AND SCHEDULES

SHEET REFERENCE NUMBER:
CO-E-01

$(getvar, "dwgprefix")$(getvar, "dwgname")$(edtime, 0, MON DD",", YYYY - HHMMam/pm)

LIGHTING FIXTURE SCHEDULE

TYPE	DESCRIPTION	NO. OF LAMPS	LAMP TYPE	WATTS PER LAMP	VOLTAGE	MOUNTING
A	PENDANT MOUNTED INDUSTRIAL FLUORESCENT LIGHT FIXTURE WITH WIDE DISTRIBUTION REFLECTOR KIT	2	T8	36	220/50HZ	PENDANT
A1	SURFACE MOUNTED INDUSTRIAL FLUORESCENT LIGHT FIXTURE WITH WIDE DISTRIBUTION REFLECTOR KIT	2	T8	36	220/50HZ	SURFACE
B	SURFACE PENDANT MOUNTED PRISTMIC REFLECTOR	2	T8	36	220/50HZ	SURFACE/PENDENT
C	PENDANT MOUNTED FLUORESCENT LIGHT FIXTURE WITH REFLECTOR AND ACRYLIC LENS	4	T8	36	220/50HZ	PENDANT
C1	SURFACE MOUNTED FLUORESCENT LIGHT FIXTURE WITH REFLECTOR AND ACRYLIC LENS	4	T8	36	220/50HZ	SURFACE
D2	SURFACE/PENDANT MOUNTED FIXTURE SPECIAL FOR WET LOCATION	4	T8	36	220/50HZ	SURFACE
E	SURFACE/WALL MOUNTED FIXTURE SPECIAL FOR WET LOCATION	2	T8	36	220/50HZ	SURFACE OR WALL
F	WALL MOUNTED COMPACT FLUOR. EXPLOSION PROOF LIGHTING FIXTURE SPECIAL FOR PITS WORKSHOP PIT	2	CF	26	220/50HZ	WALL
G	PENDANT MOUNTED INDUSTRIAL LOW BAY FIXTURE	1	HPS	150	220/50HZ	PENDANT
G1	PENDANT MOUNTED INDUSTRIAL HIGH BAY FIXTURE	1	HPS	150	220/50HZ	PENDANT
G2	PENDANT MOUNTED INDUSTRIAL LOW BAY FIXTURE	1	HPS	250	220/50HZ	PENDANT
H	SEALED BEAM SPOT LIGHT WITH HALOGEN NARROW SPOT PAR 56 LAMP, TWIST LEVER CONTROL, 10" DIAMETER HEAD, WORKING RANGE OF ½ MILE	1	HALOGEN	1000	220/50HZ	ROOF
I	VAPOR PROOF PROTECTED INCANDESCENT WITH CLEAR, RED, BLUE, OR BLACK GLOBE, AS INDICATED ON THE DRAWINGS	1	INCANDESCENT	100	220/50HZ	SURFACE
J	EXPLOSION PROOF SURFACE MOUNTED FLUOR. FIXTURE	2	INCLUDED	36	220/50HZ	SURFACE
X1	EXIT SIGN WITH DIRECTIONAL ARROWS AS REQUIRED	2	INCLUDED	8	220/50HZ	UNIVERSAL
X2	EMERGENCY FIXTURE WITH HALOGEN LAMPS	2	HALOGEN	20	220/50HZ	WALL/SURFACE
X3	EXPLOSION PROOF EMERGENCY FIXTURE WITH HALOGEN LAMPS	2	HALOGEN	14	220/50HZ	WALL/SURFACE

CABLE SCHEDULE

220 VOLT, 1PH, 3W. CIRCUITS

CIRCUIT BREAKER	CONDUCTOR
20A-1P	2 #4mm² & 1 #4mm² GND. – 20mm C.
30A-1P	2 #6mm² & 1 #6mm² GND. – 20mm C.
40A-1P	2 #10mm² & 1 #6mm² GND. – 20mm C.
50A-1P	2 #16mm² & 1 #6mm² GND. – 25mm C.
60A-1P	2 #25mm²& 1 #10mm² GND. – 25mm C.

380 VOLT, 3PH, 4W. CIRCUITS

20A-3P	3 #4mm² & 1 #4mm² GND. – 20mm C.
30A-3P	3 #6mm² & 1 #6mm² GND. – 20mm C.
40A-3P	3 #10mm² & 1 #6mm² GND. – 20mm C.
50A-3P	3 #16mm² & 1 #6mm² GND. – 38mm C.
60A-3P	3 #25mm²& 1 #10mm² GND. – 38mm C.
80A-3P	3 #35mm² & 1 #10mm² GND.–38mmC.
100A-3P	3 #50mm² & 1 #10mm² GND.–40mmC.

380 VOLT, 3PH, 5W. CIRCUITS

20A-3P	4 #4mm² & 1 #4mm² GND. – 20mm C.
30A-3P	4 #6mm² & 1 #6mm² GND. – 20mm C.
40A-3P	4 #10mm²& 1 #10mm² GND. – 32mm C.
50A-3P	4 #16mm² & 1 #6mm² GND. – 38mm C.
60A-3P	4 #25mm²& 1 #10mm² GND. – 38mm C.
80A-3P	4 #35mm² & 1 #10mm² GND. – 38mm C.
100A-3P	4 #50mm² & 1 #10mm² GND. – 50mm C.
150A-3P	4 #70mm² & 1 #16mm² GND. – 50mm C.
200A-3P	4 #120mm² & 1 #16mm² GND. – 60mm C.
250A-3P	4 #120mm² & 1 #25mm² GND. – 60mm C.
300A-3P	4 #185mm² & 1 #25mm² GND. – 90mm C.
350A-3P	4 #300mm²& 1 #25mm² GND. – 100mm C.
400A-3P	2(4 #120mm² & 1 #25mm² GND. – 60mm C.)
500A-3P	2(4 #120mm² & 1 #35mm² GND. – 60mm C.)
600A-3P	2(4 #185mm² & 1 #50mm² GND. – 90mm C.)
700A-3P	2(4 #300mm²& 1 #50mm² GND. – 100mm C.)

NOTE:
1. TYPE MC CABLE SHALL INCLUDE FULL SIZE INSULATED GROUND CONDUCTOR. SIZES AS INDICATED IN SCHEDULE.

NOTES:
1. CABLE SCHEDULES FOR REFERENCE CONTRACTOR SHALL VERIFY CABLE S ON NEC.

DRAWING NOT TO SCALE

SYMBOL	DESCRIPTION	DATE	APR

DESIGNED BY: MANAXY L.
DATE: 04-11-07
DWN. BY: NAGY S.
SUBMITTED BY: SYED ENAYATULLA CHIEF PROJ. BLDG. SYSTEMS
CHK BY: SHERINE S.
FILE NO.: AF0707CO-E-02

US Army Corps of Engineers Transatlantic Programs Center

ANA REGIONAL BRIGADE
PAKTIKA, AFGHANISTAN

ELECTRICAL BRANCH CIRCUIT AND LIGHTING FIXTURE SCHEDULE

SHEET REFERENCE NUMBER:
CO-E-02

$(getvar, "dwgprefix")$(getvar, "dwgname")$(edtime, 0, MON DD",", YYYY - HHMMam/pm)

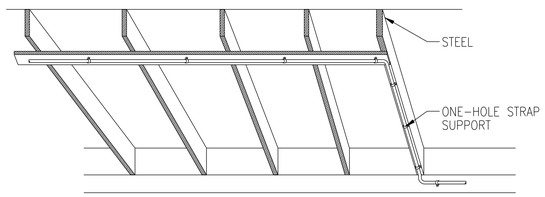

1 SURFACE MOUNTED CONDUIT SUPPORT

CO-E-03 SCALE: N.T.S

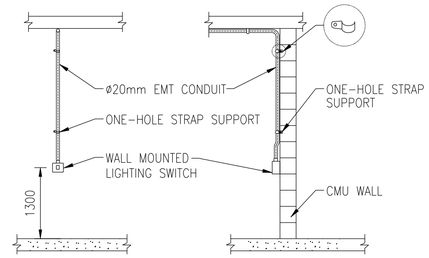

NOTE:-
WALL MOUNTED LIGHTING OUTLETS SHOULD BE CENTRAL ON A BLOCK, NOT BETWEEN TWO BLOCKS.

2 GENERAL INSTALLATION DETAIL FOR LIGHTING SWITCH (CONDUIT EXPOSED)

CO-E-03 SCALE: N.T.S

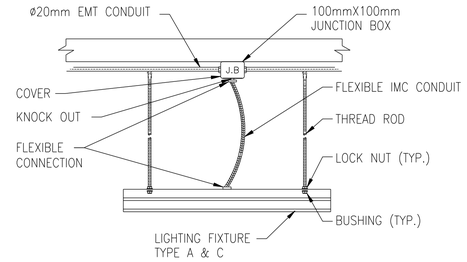

3 PENDANT LIGHT FIXTURE DETAIL (NOT USED)

CO-E-03 SCALE: N.T.S

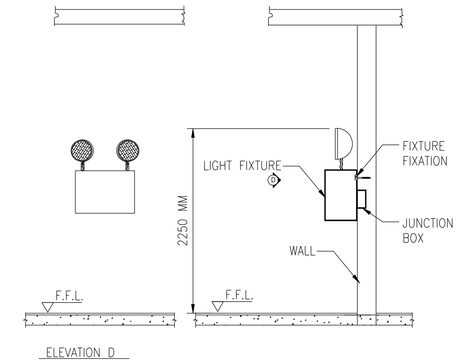

4 SURFACE EMERGENCY LIGHT FIXTURE DETAIL

CO-E-03 SCALE: N.T.S

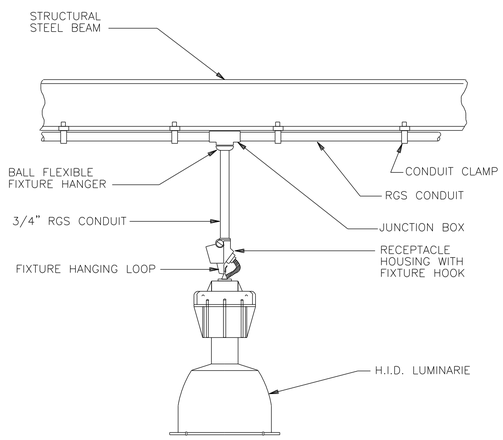

5 H.I.D. LUMINARIE PENDANT MOUNTED

CO-E-03 SCALE: N.T.S

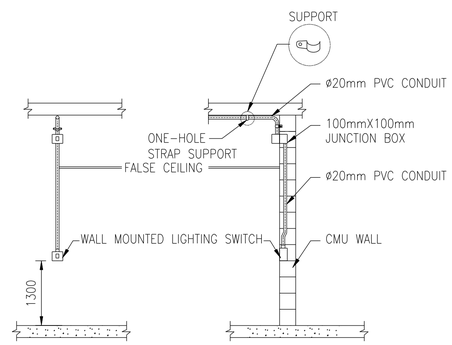

6 GENERAL INSTALLATION DETAIL FOR LIGHT SWITCH (CONDUIT CONCEALED)

CO-E-03 SCALE: N.T.S

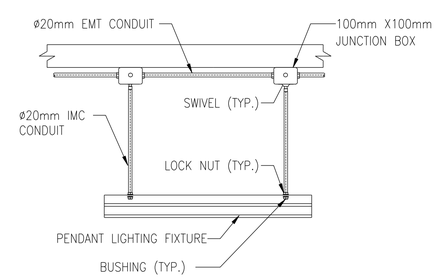

7 INSTALLATION OF LIGHTING FIXTURE IN SEISMIC BUILDING

CO-E-03 SCALE: N.T.S

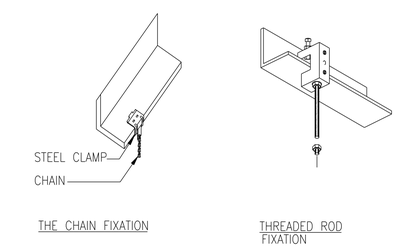

8 GENERAL SUPPORT DETAIL

CO-E-03 SCALE: N.T.S

NOTE:

1. FOR EMBEDDED INSTALLATIONS CONDUITS SHALL BE PVC SCHEDULE 40.

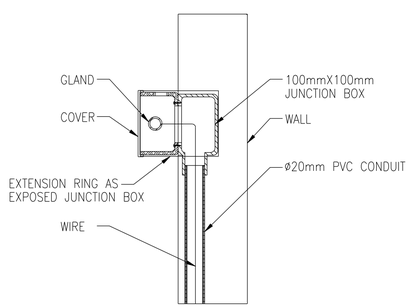

9 CONVERTING FROM EXPOSED TO EMBEDDED ROUTING IN WALL

CO-E-03 SCALE: N.T.S

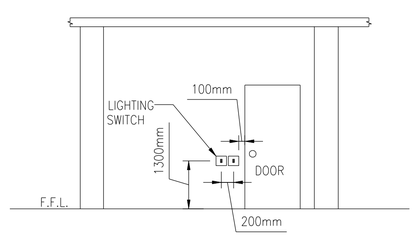

NOTE:-
THE LOCATION OF THE CONDUIT FEEDING THE FIRST SWITCH TO BE 100mm FROM THE DOOR OPENING

10 LIGHT SWITCH MOUNTING

CO-E-03 SCALE: N.T.S

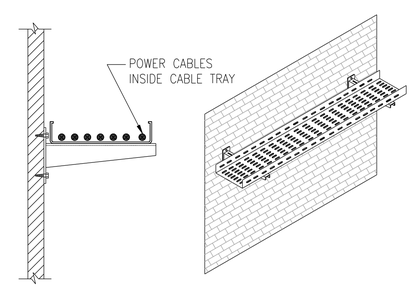

11 GENERAL INSTALLATION DETAIL FOR WALL MOUNTED CABLE TRAY

CO-E-03 SCALE: N.T.S

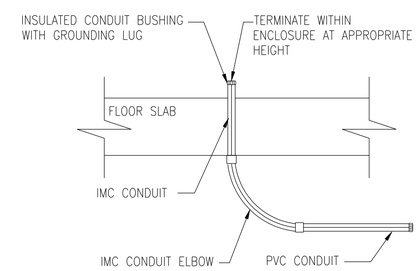

12 TYPICAL CONDUIT STUB-UP THROUGH FLOOR SLAB FOR FEEDING EQUIPMENT

CO-E-03 DRAWING NOT TO SCALE SCALE: N.T.S

SYMBOL	DESCRIPTION	DATE	APR

DESIGNED BY: MANAL L. | DATE: 04-11-07
DWN BY: NAGY S. | SUBMITTED BY: SYED ENAYATULLA, CHIEF POWER BLDG SYSTEMS
CHK BY: SHERINE S. | FILE NO.: AF0707CO-E-03

US Army Corps of Engineers Transatlantic Programs Center

ANA REGIONAL BRIGADE
PAKTIKA, AFGHANISTAN

ELECTRICAL GENERAL
LIGHTING DETAILS

SHEET REFERENCE NUMBER:
CO-E-03

$(getvar, "dwgprefix")$(getvar, "dwgname")$(edtime, O, MON DD"," YYYY - HHMMam/pm)

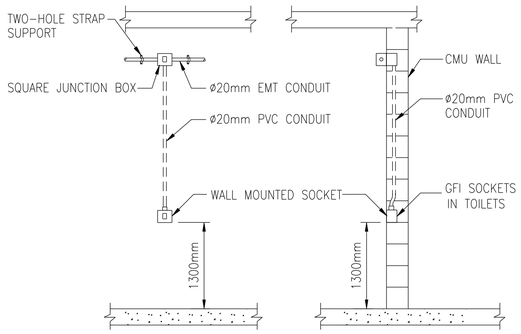

1 GENERAL INSTALLATION DETAIL FOR RECESSED SURFACE MOUNTED SOCKET IN TOILETS

CO-E-04 SCALE: N.T.S

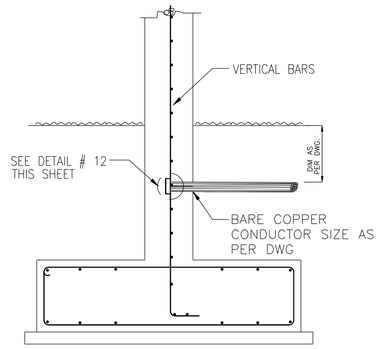

2 TYPICAL STRUCTURAL BONDING DETAIL

CO-E-04 SCALE: N.T.S

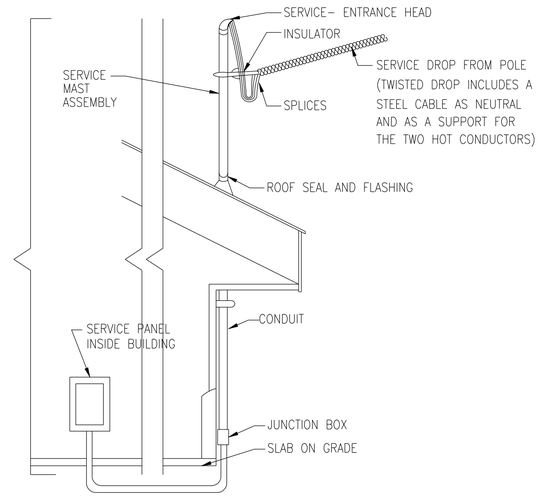

3 PANEL BOARD FEEDING FROM BOTTOM (FOR PANELS NOT IN EXTERIOR WALL)

CO-E-04 SCALE: N.T.S.

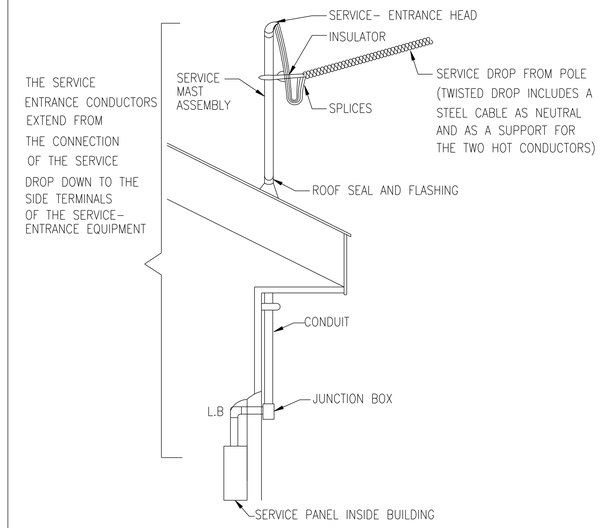

4 PANEL BOARD FEEDING FROM TOP (FOR PANELS ON EXTERLOR WALL)

CO-E-04 SCALE: N.T.S.

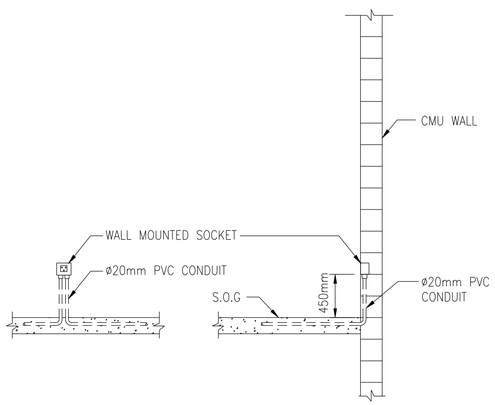

5 GENERAL INSTALLATION DETAIL FOR RECESSED SOCKET (CONDUIT EMBEDDED IN SLAB)

CO-E-04 SCALE: N.T.S

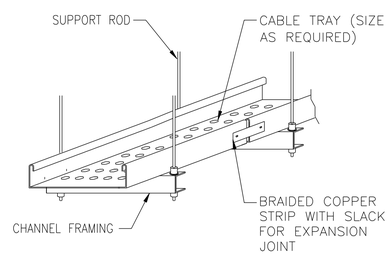

6 CABLE TRAY CROSSING EXPANSION JOINT

CO-E-04 SCALE: N.T.S

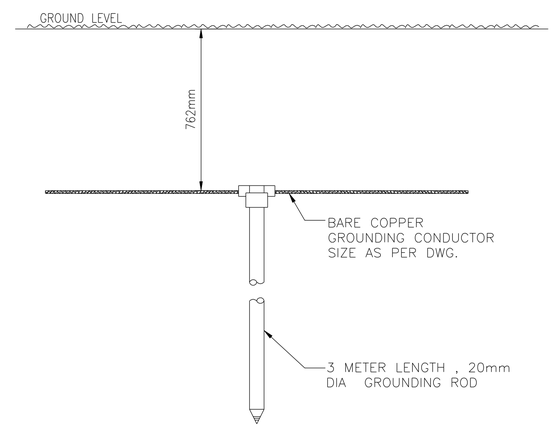

7 GROUND ROD INSTALLATION DETAIL

CO-E-04 SCALE: N.T.S

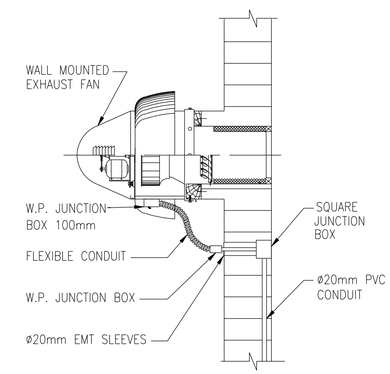

8 GENERAL INSTALLATION DETAIL FOR EXHAUST FAN (CONDUIT EMBEDDED)

CO-E-04 SCALE: N.T.S

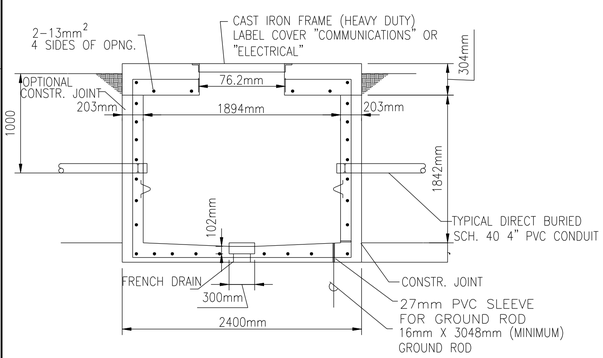

9 MANHOLE DETAIL (2400x2400mm)

CO-E-04 SCALE: N.T.S.

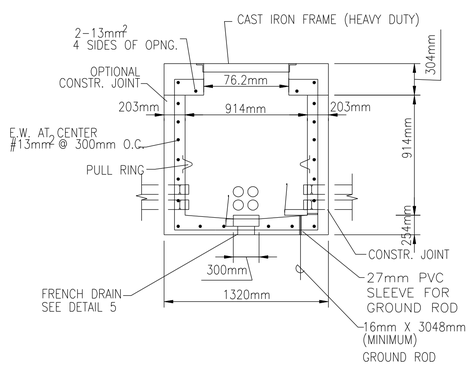

10 HAND HOLE DETAIL (1320x1320mm)

CO-E-04 SCALE: N.T.S.

HORIZONTAL SPLICE

11 T-CONNECTION WELDING POINT

CO-E-04 SCALE: N.T.S.

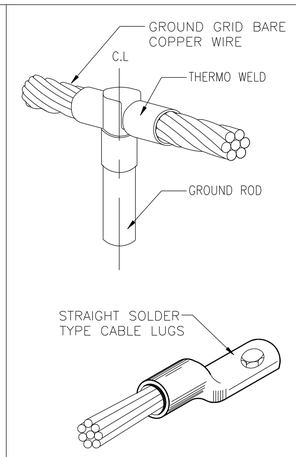

12 GROUNDING CABLE LUGS

CO-E-04 SCALE: N.T.S.

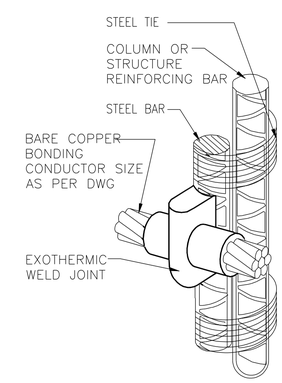

13 WELDING TO STEEL REINFORCING BAR

CO-E-04 SCALE: N.T.S.

DRAWING NOT TO SCALE

SYMBOL	DESCRIPTION	DATE	APR

DESIGNED BY: MANAL.XL. DATE: 04-11-07
DWN BY: NAGH.S. SUBMITTED BY: SYED ENAYATULLA CHIEF, BLDG SYSTEMS
CHK BY: SHERINE S. FILE NO.: AF0707 CO-E-04

US Army Corps of Engineers Transatlantic Programs Center

ANA REGIONAL BRIGADE
PAKTIKA, AFGHANISTAN

ELECTRICAL GENERAL POWER AND GROUNDING DETAILS

SHEET REFERENCE NUMBER:
CO-E-04

$(getvar, "dwgprefix")$(getvar, "dwgname")$(edtime, 0, MON DD"", YYYY - H:MMam/pm)

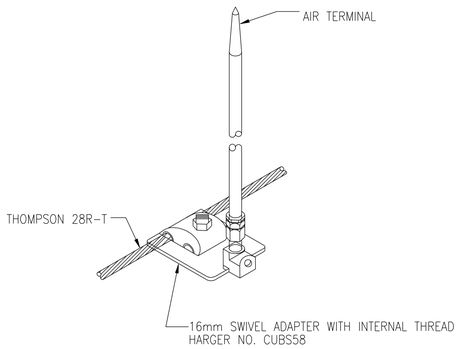

1 AIR TERMINAL MOUNTING DETAIL

CO-E-05 SCALE: N.T.S

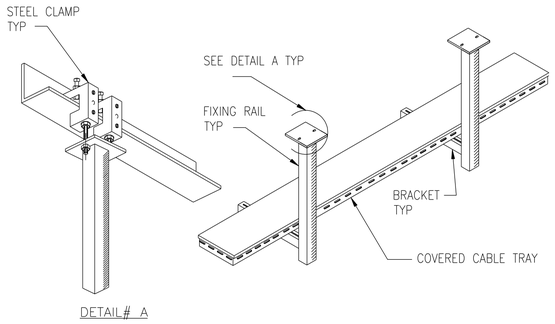

2 CABLE TRAY SUPPORT DETAIL

CO-E-05 SCALE: N.T.S

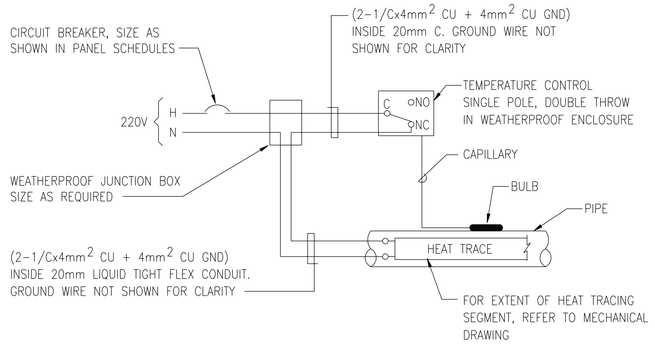

3 HEAT TRACE CONTROL DIAGRAM

CO-E-05 SCALE: N.T.S

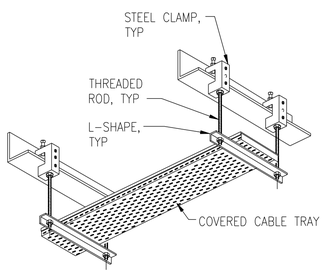

4 CABLE TRAY SUPPORT DETAIL

CO-E-05 SCALE: N.T.S

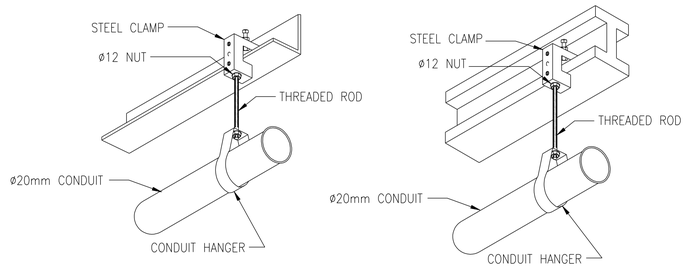

5 SUPPORT OF CONDUIT FROM STEEL STRUCTURE

CO-E-05 SCALE: N.T.S

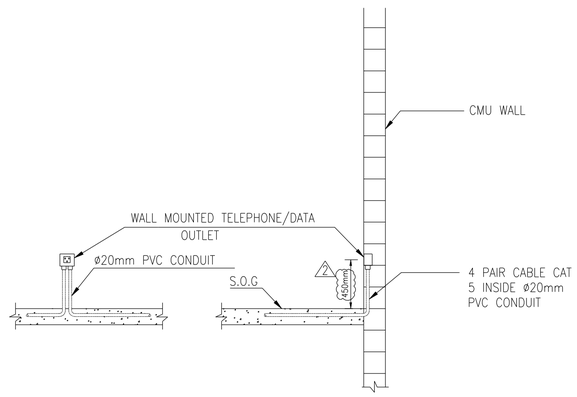

6 GENERAL INSTALLATION DETAIL FOR RECESSED TELEPHONE/ DATA OUTLET (CONDUIT EMBEDDED IN SLAB)

CO-E-05 SCALE: N.T.S

DRAWING NOT TO SCALE

SYMBOL	DESCRIPTION	DATE	APR

DESIGNED BY: MANWAL L.
DATE: 04-11-07
DWN BY: NAGY S.
SUBMITTED BY: SYED ENAYATULLA CHIEF PROJ. BLDG SYSTEMS
CHK BY: SHERINE S.
FILE NO.: AF0707CO-E-05

US Army Corps of Engineers Transatlantic Programs Center

ANA REGIONAL BRIGADE
PAKTIKA, AFGHANISTAN

ELECTRICAL GENERAL
LOW CURRENT DETAILS

SHEET REFERENCE NUMBER:
CO-E-05

$(getvar, "dwgprefix")$(getvar, "dwgname")$(edtime, 0, MON DD"," YYYY - HHMMam/pm)