SOLICITATION, OFFER, AND AWARD (Construction, Alteration, or Repair)	1. SOLICITATION NO. W917PM-08-R-0008	2. TYPE OF SOLICITATION [ ] SEALED BID (IFB) [X] NEGOTIATED (RFP)	3. DATE ISSUED 10-Nov-2007	PAGE OF PAGES 1 OF 221

IMPORTANT - The "offer" section on the reverse must be fully completed by offeror.

4. CONTRACT NO.	5. REQUISITION/PURCHASE REQUEST NO.	6. PROJECT NO.

7. ISSUED BY CODE W917PM	8. ADDRESS OFFER TO (If Other Than Item 7) CODE
AFGHANISTAN ENGINEER DISTRICT US ARMY CORPS OF ENGINEERS KABUL APO AE 09356 TEL: FAX:	**See Item 7** TEL: FAX:

9. FOR INFORMATION CALL:	A. NAME	B. TELEPHONE NO. (Include area code) (NO COLLECT CALLS)
	JOHN A COMINOTTO	496118162600

SOLICITATION

NOTE: In sealed bid solicitations "offer" and "offeror" mean "bid" and "bidder".

10. THE GOVERNMENT REQUIRES PERFORMANCE OF THE WORK DESCRIBED IN THESE DOCUMENTS *(Title, identifying no., date):*

The Government intends to award one Firm Fixed Price Contract for the design and construction of six facilities for the Afghanistan National Police (ANP) Uniformed Police District Headquarters located at various locations in Badakhshan Province, Afghanistan.

The magnitude of this contract action is estimated to be between $1,000,000.00 to $5,000,000.00 for the Base and all Options.

Point of contact for this acquisition is John A. Cominotto Contract Specialist at e-mail address john.a.cominotto2@usace.army.mil

11. The Contractor shall begin performance within 7 calendar days and complete it within 420 calendar days after receiving [ ] award, [X] notice to proceed. This performance period is [X] mandatory, [ ] negotiable. *(See* FAR 52.211-10 *.)*

12 A. THE CONTRACTOR MUST FURNISH ANY REQUIRED PERFORMANCE AND PAYMENT BONDS? *(If "YES," indicate within how many calendar days after award in Item 12B.)* [ ] YES [X] NO	12B. CALENDAR DAYS

13. ADDITIONAL SOLICITATION REQUIREMENTS:

A. Sealed offers in original and 3 copies to perform the work required are due at the place specified in Item 8 by 05:00 PM *(hour)* local time 13 Dec 2007 *(date).* If this is a sealed bid solicitation, offers must be publicly opened at that time. Sealed envelopes containing offers shall be marked to show the offeror's name and address, the solicitation number, and the date and time offers are due.

B. An offer guarantee [ ] is, [X] is not required.

C. All offers are subject to the (1) work requirements, and (2) other provisions and clauses incorporated in the solicitation in full text or by reference.

D. Offers providing less than 120 calendar days for Government acceptance after the date offers are due will not be considered and will be rejected.

SOLICITATION, OFFER, AND AWARD (Continued)

(Construction, Alteration, or Repair)

OFFER ***(Must be fully completed by offeror)***

14. NAME AND ADDRESS OF OFFEROR *(Include ZIP Code)*		15. TELEPHONE NO. *(Include area code)*
		16. REMITTANCE ADDRESS *(Include only if different than Item 14)* **See Item 14**
CODE	FACILITY CODE	

17. The offeror agrees to perform the work required at the prices specified below in strict accordance with the terms of this solicitation, if this offer is accepted by the Government in writing within _____ calendar days after the date offers are due. *(Insert any number equal to or greater than the minimum requirements stated in Item 13D. Failure to insert any number means the offeror accepts the minimum in Item 13D.)*

AMOUNTS	SEE SCHEDULE OF PRICES

18. The offeror agrees to furnish any required performance and payment bonds.

19. ACKNOWLEDGMENT OF AMENDMENTS

(The offeror acknowledges receipt of amendments to the solicitation -- give number and date of each)

AMENDMENT NO.										
DATE										

20A. NAME AND TITLE OF PERSON AUTHORIZED TO SIGN OFFER *(Type or print)*	20B. SIGNATURE	20C. OFFER DATE

AWARD ***(To be completed by Government)***

21. ITEMS ACCEPTED:

22. AMOUNT	23. ACCOUNTING AND APPROPRIATION DATA

24. SUBMIT INVOICES TO ADDRESS SHOWN IN *(4 copies unless otherwise specified)*	**ITEM**	25. OTHER THAN FULL AND OPEN COMPETITION PURSUANT TO ☐ 10 U.S.C. 2304(c) ☐ 41 U.S.C. 253(c)
26. ADMINISTERED BY CODE		27. PAYMENT WILL BE MADE BY: CODE

CONTRACTING OFFICER WILL COMPLETE ITEM 28 OR 29 AS APPLICABLE

☐ 28. NEGOTIATED AGREEMENT *(Contractor is required to sign this document and return _ _ copies to issuing office.)* Contractor agrees to furnish and deliver all items or perform all work, requisitions identified on this form and any continuation sheets for the consideration stated in this contract. The rights and obligations of the parties to this contract shall be governed by (a) this contract award, (b) the solicitation, and (c) the clauses, representations, certifications, and specifications or incorporated by reference in or attached to this contract.		☐ 29. AWARD *(Contractor is not required to sign this document.)* Your offer on this solicitation, is hereby accepted as to the items listed. This award consummates the contract, which consists of (a) the Government solicitation and your offer, and (b) this contract award. No further contractual document is necessary.
30A. NAME AND TITLE OF CONTRACTOR OR PERSON AUTHORIZED TO SIGN *(Type or print)*		31A. NAME OF CONTRACTING OFFICER *(Type or print)* TEL: EMAIL:
30B. SIGNATURE	30C. DATE	31B. UNITED STATES OF AMERICA BY
		31C. AWARD DATE

TABLE OF CONTENTS

DESIGN BUILD SPECIFICATIONS
FOR
ANP 1-Story UP District HQ
Badakhshan Province (Package 2), Afghanistan

Section	Title
00010	Proposal Form
00110	Proposal Preparation
00120	Proposal Evaluation and Contract Award
00150	The Design-Build Process
00555	Design Concept Documents
01010	Scope of Work
01015	Technical Requirements
01060	Special Clauses
01312	Quality Control System (QCS)
01321	Project Schedule
01335	Submittal Procedures for Design/Build Projects
01415	Metric Measurements
01451	Contractor Quality Control
01525	Safety & Occupational Health Requirements
01770	Closeout Procedures
01780	Closeout Submittals
01781	Operation and Maintenance Data

Attachments:

Appendix A 1335a
Drawings
Map Takhar Bacakhshan

PROPOSAL SCHEDULE

SECTION 00010

PROPOSAL SCHEDULE

The Contractor shall provide a price for all items shown on this proposal schedule. The Government will evaluate the Contractor's entire proposal to determine price reasonableness of each CLINs.

No.	Description	Qty	Unit	Unit Price	Total Amount
UP District HQ- Arghanjwa (Clins 0001 – 0007)					
0001 Design					
0001AA	Site Adapt Design Cost	1	LS	XXX	$_____
0002AB	Surveys and Master Planning	1	LS	XXX	$_____
Total Design Only					**$**_____
0002	Mobilization	1	LS	XXX	$_____
0003	Demobilization	1	LS	XXX	$_____
0004	As Built Drawings	1	LS	XXX	$_____
0005 Site Development (Construction)					
0005AA	De-Mining Activities	1	LS	XXX	$_____
0005AB	Grading	1	LS	XXX	$_____
0005AC	Water System	1	LS	XXX	$_____
0005AD	Sanitary Sewer System	1	LS	XXX	$_____
0005AE	Site Electrical Distribution System	1	LS	XXX	$_____
0005AF	Force Protection Measures	1	LS	XXX	$_____

0005AG Road Network	1	LS	XXX	$_____
0005AH Trash Point	1	LS	XXX	$_____
Sub-Total Site Development only				**$**_____
0006 UP District HQ Building (Construction)	1	LS	XXX	$_____
0007 Demolition (Optional Item)	1	LS	XXX	$_____
TOTAL of Clins 0001 – 0007 (Arghanjwa)				**$**_____

UP District HQ- Baharak

(Clins 0008 – 0014)

0008 Design

0008AA Site Adapt Design Cost	1	LS	XXX	$_____
0008AB Surveys and Master Planning	1	LS	XXX	$_____
Total Design Only				**$**_____
0009 Mobilization	1	LS	XXX	$_____
0010 Demobilization	1	LS	XXX	$_____
0011 As Built Drawings	1	LS	XXX	$_____

0012 Site Development (Construction)

0012AA De-Mining Activities	1	LS	XXX	$_____
0012AB Grading	1	LS	XXX	$_____
0012AC Water System	1	LS	XXX	$_____
0012AD Sanitary Sewer System	1	LS	XXX	$_____
0012AE Site Electrical Distribution System	1	LS	XXX	$_____
0012AF Force Protection Measures	1	LS	XXX	$_____
0012AG Road Network	1	LS	XXX	$_____
0012AH Trash Point	1	LS	XXX	$_____
Sub-Total Site Development only				**$**_____
0013 UP District HQ Building (Construction)	1	LS	XXX	$_____

0014 Demolition (Optional Item)	1	LS	XXX	$_____
TOTAL of Clins 0008 – 0014 (Baharak)				**$**_____

UP District HQ- Shar-i-Buzurg

(Clins 0015 – 0021)

0015 Design

0015AA Site Adapt Design Cost	1	LS	XXX	$_____
0015AB Surveys and Master Planning	1	LS	XXX	$_____
Total Design Only				**$**_____
0016 Mobilization	1	LS	XXX	$_____
0017 Demobilization	1	LS	XXX	$_____
0018 As Built Drawings	1	LS	XXX	$_____

0019 Site Development (Construction)

0019AA De-Mining Activities	1	LS	XXX	$_____
0019AB Grading	1	LS	XXX	$_____
0019AC Water System	1	LS	XXX	$_____
0019AD Sanitary Sewer System	1	LS	XXX	$_____
0019AE Site Electrical Distribution System	1	LS	XXX	$_____
0019AF Force Protection Measures	1	LS	XXX	$_____
0019AG Road Network	1	LS	XXX	$_____
0019AH Trash Point	1	LS	XXX	$_____
Sub-Total Site Development only				**$**_____
0020 UP District HQ Building (Construction)	1	LS	XXX	$_____
0021 Demolition (Optional Item)	1	LS	XXX	$_____
TOTAL of Clins 0013 – 0018 (Shar-i-Buzurg)				**$**_____

UP District HQ- Shuhada

(Clins 0022 – 0028)

0022 Design

0022AA Site Adapt Design Cost	1	LS	XXX	$_____
0022AB Surveys and Master Planning	1	LS	XXX	$_____
Total Design Only				**$**_____
0023 Mobilization	1	LS	XXX	$_____
0024 Demobilization	1	LS	XXX	$_____
0025 As Built Drawings	1	LS	XXX	$_____

0026 Site Development (Construction)

0026AA De-Mining Activities	1	LS	XXX	$_____
0026AB Grading	1	LS	XXX	$_____
0026AC Water System	1	LS	XXX	$_____
0026AD Sanitary Sewer System	1	LS	XXX	$_____
0026AE Site Electrical Distribution System	1	LS	XXX	$_____
0026AF Force Protection Measures	1	LS	XXX	$_____
0026AG Road Network	1	LS	XXX	$_____
0026AH Trash Point	1	LS	XXX	$_____
Sub-Total Site Development only				**$**_____
0027 UP District HQ Building (Construction)	1	LS	XXX	$_____
0028 Demolition (Optional Item)	1	LS	XXX	$_____

TOTAL of Clins 0022 – 0028 (Shuhada) **$**_____

UP District HQ- Tashkam

(Clins 0029 – 0035)

0029 Design

0029AA Site Adapt Design Cost	1	LS	XXX	$_____
0029AB Surveys and Master Planning	1	LS	XXX	$_____
Total Design Only				**$**_____
0030 Mobilization	1	LS	XXX	$_____
0031 Demobilization	1	LS	XXX	$_____
0032 As Built Drawings	1	LS	XXX	$_____

0033 Site Development (Construction)

0033AA De-Mining Activities	1	LS	XXX	$_____
0033AB Grading	1	LS	XXX	$_____
0033AC Water System	1	LS	XXX	$_____
0033AD Sanitary Sewer System	1	LS	XXX	$_____
0033AE Site Electrical Distribution System	1	LS	XXX	$_____
0033AF Force Protection Measures	1	LS	XXX	$_____
0033AG Road Network	1	LS	XXX	$_____
0033AH Trash Point	1	LS	XXX	$_____
Sub-Total Site Development only				**$**_____
0034 UP District HQ Building (Construction)	1	LS	XXX	$_____
0035 Demolition (Optional Item)	1	LS	XXX	$_____
TOTAL of Clins 0029 – 0035 (Tashkam)				**$**_____

UP District HQ- Yaftel

(Clins 0036 – 0042)

0036 Design

0036AA Site Adapt Design Cost	1	LS	XXX	$_____
0036AB Surveys and Master Planning	1	LS	XXX	$_____
Total Design Only				**$**_____
0037 Mobilization	1	LS	XXX	$_____
0038 Demobilization	1	LS	XXX	$_____
0039 As Built Drawings	1	LS	XXX	$_____

0040 Site Development (Construction)

0040AA De-Mining Activities	1	LS	XXX	$_____
0040AB Grading	1	LS	XXX	$_____
0040AC Water System	1	LS	XXX	$_____
0040AD Sanitary Sewer System	1	LS	XXX	$_____
0040AE Site Electrical Distribution System	1	LS	XXX	$_____
0040AF Force Protection Measures	1	LS	XXX	$_____
0040AG Road Network	1	LS	XXX	$_____
0040AH Trash Point	1	LS	XXX	$_____
Sub-Total Site Development only				**$**_____
0041 UP District HQ Building (Construction)	1	LS	XXX	$_____
0042 Demolition (Optional Item)	1	LS	XXX	$_____
TOTAL of Clins 0036 – 0042 (Yaftel)				**$**_____

GRAND TOTAL OF ALL ITEMS:
$_____

PROPOSAL SCHEDULE NOTES:

1. Offeror shall submit prices on all items.

2. Prices shown on the bid schedule shall include all costs associated with the cost of doing business in performance of the work required in Section 01010 of this solicitation/contract. Prices shall include all items of work such as site specific submittals, construction costs for site, facilities and utilities preparation as required in section 01010 of this solicitation.

3. Period of performance is 420 calendar days from receipt of notice to proceed for the base and all options and options may be exercised within 120 calendar days from receipt of notice to proceed. Liquidated damages are assessed at $2,100.00 per day for every day of delay past the period of performance of 420 calendar days until contract completion.

--END OF SECTION--

Section 00100 - Bidding Schedule/Instructions to Bidders

INSTRUCTIONS TO BIDDERS

Estimated cost range of this project including the base proposal and all options is between $1,000,000.00 and $5,000,000.00.

NOTICE: Return Section 00600, "Representations and Certifications" and requested information from Section 00010 "Solicitation Contract Form", with your proposal.

Request for information must be directed to John A. Cominotto. Inquiries and request that are directed to any other person may not be relayed to the proper person and therefore, may not be answered. Please email all questions to john.a.cominotto2@usace.army.mil

There will be a pre-proposal meeting on 17 November 2007, 9:30 a.m. Kabul time, at U.S. Army Corps of Engineers, House #1 Street #1, West Wazir Akbar Khan (behind Amani High School) Kabul, Afghanistan.

Proposals should be delivered to: U.S. Army Corps of Engineers, House #1 Street #1, West Wazir Akbar Khan (behind Amani High School), Kabul, Afghanistan, Attn: John A. Cominotto, prior to the time and date specified for receipt of proposals. Due to heightened security conditions, access to the building is controlled by security. No electronic proposals will be accepted.

ALL CONTRACTORS PLEASE NOTE, TO RECEIVE A DUNS NUMBER
ACCESS THE WEBSITE BELOW:

INTERNATIONAL DUNS REQUEST INFORMATION:

Please click on the link below and fill in the International DUNS Request form.

http://www.dnb.com/upik/uk/intldunsform.asp?link=request

If you have problems with the form or require a DUNS number immediately, please contact your local D&B Office which can be found by clicking through this link.
http://www.dnb.com/US/customer_service/global_listing.asp

SECTION 00110

PROPOSAL PREPARATION

PART 1 - GENERAL

A. PROPOSAL PREPARATION. Instructions for the preparation and organization of each proposal are included herein. The proposal submittal shall include **(a) one original and three copies of Volume I and (b) one original and two copies of Volume II.** The Volume II proposal and all copies thereof shall be sealed in a single package separate from the Volume I proposal and all copies thereof, and both packages shall be clearly marked. The proposal shall be submitted as required herein and elsewhere in the RFP.

Volume I shall be typed, with numbered pages and sections tabbed. A cover sheet shall identify the offeror and the project and the second sheet shall be a table of contents. The Volume I proposal is limited to no more than 50 single-sided or 25 double-sided pages, printed on 8-1/2" x 11" sheets, not including the cover sheet, designs/sketches, table of contents and letters of recommendation / evaluations / related certificates. Do not use condensed print. Do not submit any extraneous materials with your proposal.

1. VOLUME I – MANAGEMENT-TECHNICAL PROPOSAL PREPARATION

1.1 Content. The Management/Technical proposal shall include the information as described below and shall be presented in the sequence listed.

1.1.1 Factor 1 - Past Evaluations/Performance. For the projects listed under Paragraph 1.1.2, Factor 2 - Experience, provide the following information (Attachment 1):

- Project Manager's (Point of Contact) name, ***telephone***, email
- List the problems encountered and the corrective actions taken
- List of change orders and circumstances associated with them
- Construction time duration beyond the contract time and why.
- Construction cost in dollars beyond the contract amount and why.
- Safety record and accident report

- The offeror may also provide letters of recommendation, references, performance evaluations or other evidence of successful performance of the project.

The Source Selection Evaluation Board may attempt to contact the references provided in the list of projects. They may also contact Government personnel who have worked with the offerors. References' comments may affect the scoring of proposals. It is important to verify that the points of contact listed are still available at the phone number and addresses provided and that they are individuals who have sufficient knowledge of the project and your performance to be able to offer meaningful comments.

In the event that an offeror does not have a record of past performance, a written explanation of the reasons why no record is available is requested. In the case of an offeror without a record of relevant past performance or for whom information on past performance is not available, the offeror will not be evaluated favorably or unfavorably on past performance. A neutral rating with unknown risk will be assigned.

1.1.2 Factor 2 – Experience. Demonstrate the experience of the team, including sub-contractors, on projects similar to that described in this RFP which use the design-build process. Provide a list of no more that ten similar and relevant design-build projects underway or completed in the last **five** years that best demonstrates your experience. The list of projects shall include the following information (Attachment 2):

- Project name and location.
- Nature of firm's responsibility (design/build or design or construction).
- Project owner's name, address, ***telephone***, email (to be contacted by the Government).
- Contractor a prime or sub-contractor for this project
- Project completion date (estimated if in progress, as well as current portion completed)
- Construction cost
- Brief explanation that illustrates your design/build capabilities and relevant job experiences.

1.1.3 Factor 3 - Project Management

The Project Management Plan shall include the following (Attachment 3):

- The team structure described with an organizational chart (Attachment 4) to include:
    - Key design personnel names and their titles;
    - Key construction personnel names and their titles;
- The quality control process for both design work;
- The quality control process for construction work;

- The safety plan;
- The interaction process with the Corps of Engineers and the roles that the team members will have in dealing with;
    - Processes for resolving problems like modifications to the contract (design and construction);
    - Resolving potential design or construction delays
    - Reviewing and approving submittals;
    - Attending progress meetings and facilitating contract completion and closeout;
    - Process to control cost over runs while maintaining the project budget during design and construction.

1.1.4. Factor 4 – Personnel and Equipment Resources

1.1.4.1 - Personnel. Provide professional resume data on the following individuals who will be key personnel on the project team. Key personnel identified in this section should be senior working-level people who will be involved in design and construction on a day-to-day basis, as opposed to departmental level supervisors or executives. By identifying these personnel, the offeror makes a commitment that, barring unforeseen circumstances; they are the personnel who shall be assigned to the project. All key personnel shall have a minimum of **five** years of professional experience. (Attachment 5)

- Project Manager for design and for construction
- Quality Control Manager
- Project Architect
- Senior Structural Engineer
- Senior Civil Engineer
- Senior Mechanical Engineer
- Senior Electrical Engineer
- Fire Protection Engineer
- Construction Superintendent
- Construction Foreman (if different from above)

Information to be provided for key personnel should be limited to no more than **one page** per person and shall include: (Attachment 5)

- Name and title
- Project assignment
- Name of firm with which associated
- Years experience with this firm and with other firms
- Education degree(s), year, specialization
- Active registration, year first registered
- Other experience and qualifications relevant to the proposed project

- Provide the proposed use of Afghan contractors and labor in numbers or percentages.

1.1.4.2 – Equipment Resources. Provide equipment resources to be utilized for this project (i.e. offices, shops, warehouses, machinery, construction tools, vehicles, loaders, etc.) and other resources (i.e. cooperating companies supplying materials and/or services)

1.2 Notes

1.2.1 Joint Ventures and Teaming Arrangements. Any contractors submitted in the proposal as part of a joint venture must submit a legally binding joint venture agreement. The Government will not evaluate the capability of any contractors that are not included in the joint venture agreement. Joint ventures must include a copy of the legal joint venture signed by an authorized officer from each of the firms comprising the joint venture with the chief executive of each entity identified and a translation in English, if the original agreement is in a language other than English. Incomplete evidence of a joint venture results will not be considered.

If submitting a proposal as a Joint Venture, the experience, past performance, management plan and equipment submittal of each of the Joint Venture Partners can be submitted for the Joint Venture Entity. The experience for each Joint Venture Partner will be considered the experience of the Joint Venture entity.

The proposal may receive a higher rating if the proposal contains evidence of the Joint Venture Entity working successfully together previously on relevant projects.

1.2.2 Credit For Others. If an Offeror wishes to be credited with a subcontractor or supplier, i.e. a firm that is not the prime contractor or part of the joint venture, a letter of commitment signed by the subcontractor must be submitted. The commitment letter must be submitted even if the firm is in some way related to a joint venture partner (for example, the subcontractor is a subsidiary of a joint venture partner, or a subsidiary of a firm to which the joint venture partner is also a subsidiary). In regard to the Experience and Past Performance factors, if an Offeror submits projects demonstrating experience in one of the factors or sub-factors, and that project was completed by a subcontractor, a subsidiary, or a supplier, as opposed to the prime or one of the joint venture partners, the Offeror MUST submit a signed letter of commitment from the contractor who performed and completed the work. If a letter of commitment is not submitted, the experience will not be considered.

2. VOLUME II - PRICE PROPOSAL PREPARATION

2.1 Proposal Schedule. Offerors shall provide a signed cover letter and complete the Proposal Schedule by filling out the pricing data blanks. An executable Proposal

Schedule is included in Section 00010 herein. Overhead and profit shall be applied proportionally to each category and shall not be required to be shown separately. The proposal shall include allowances in the Price Proposal and shall schedule any contingency for weather delays for severe weather in accordance with weather requirements. All prices shall be firm.

B. CLARIFICATIONS AND FINAL PROPOSAL REVISION:

1. General. Any conflicting criteria which cannot be resolved by the terms of this RFP shall be brought to the attention of the Government by the offeror as part of the written clarification requirement of the proposal. In the absence of such request for clarification, the offeror shall perform to the most beneficial criteria as determined by the Government.

2. Written Clarification Requirement: In the event that clarifications are required prior to submitting the proposal, contact the individuals listed on the RFP letter; such contact shall be in writing. All RFP holders shall be advised of significant clarifications affecting the scope of the project.

3. Clarifications Submitted with Proposals. If ambiguities remain in the RFP at the time and date that proposals are due, written clarifications may be included in the proposal for consideration by the Government. Clarifications submitted with proposals shall clearly identify the understanding of the RFP documents and how this understanding is reflected in the cost proposal. Qualifications, exclusions and exceptions in the form of clarifications may be considered by the Government to be non-responsive and may be grounds for rejection of the proposal.

4. Final Proposal Revision(s):

4.1 The Government intends to award a contract on the basis of the initial offers received without further discussions or negotiations. Offers should contain the offeror's best terms from a cost and management standpoint.

4.2 The Government may contact those firms whose proposals are within the competitive range and conduct discussions/negotiations concerning their proposal. Following resolution of the discussions/negotiations, offerors in the competitive range shall be given the opportunity to submit their Final Proposal Revision (otherwise known as 'Best and Final offer').

-- End of Section --

TEMPLATE FORMAT GUIDANCE ONLY

FACTOR 1

PAST EVALUATIONS/ PERFORMANCE

The following projects are to be the same projects submitted under Factor 2 Experience.

1. Project Name & Location:

2. Customer Point of Contact: (Note: the Government may contact this customer to verify the information provided on this form)
   Name:
   Address:
   Phone number:
   Email Address:

3. Problems encountered and corrective actions taken:

4. List Change Orders and their circumstances:

5. Project scheduled Completion date Actual Completion date:
   IF the above dates are different, explain reason for the change:

6. Initial Project Budget (US Dollars)
   Final Actual Project cost (US Dollars)
   IF the above dates are different, explain reason for the change:

7. Safety record and accident reports:

8. References: Submit the following, Customer Satisfaction letters, Letters of Appreciation, Performance Evaluations, Certification of Achievements, and Letters of Recommendations.

(Note: A neutral rating with unknown risk will be assigned IF no past performance is submitted)

TEMPLATE FORMAT GUIDANCE ONLY

FACTOR 2

EXPERIENCE

a. Project Name & Location:

b. Contract Number if applicable:

c. Project type: Construction: (Y/N) Design: (Y/N) Design/Build: (Y/N)

d. Project owner's name:
Address:
Telephone:
Email:

e. Prime Contractor: (Y/N) Sub-Contractor: (Y/N)

f. Project completion Date:

g. Construction Cost:

h. Brief explanation that illustrates your design/build capabilities and relevant experiences:

TEMPLATE FORMAT GUIDANCE ONLY

FACTOR 3

PROJECT MANAGEMENT PLAN

1. Provide an Organizational Chart: (include key personnel Names and their titles)
   a. Show the key design personnel
   b. Show the key construction personnel
   c. Show other firms involved such as partnerships and sub-contractors if applicable
   d. Show the relationship between the quality control and health & safety personnel, project level management and corporate management

2. Explain the quality control process for design:

3. Explain quality control management throughout the construction process including;
   a. Testing
   b. Inspection
   c. Safety

4. Explain how interactions with the Corps of Engineers and the roles that different team members will play when dealing with;
   a. Resolving problems with modifications to the contract (design and/or construction)
   b. Resolving potential design and/or construction delays
   c. Reviewing and approving submittals
   d. Attending progress meetings
   e. Facilitating contract completion and closeouts
   f. Explain process to control cost over runs while maintaining the project budget during design and construction.

This portion of the contractor's proposal shall be limited to no more than 10 pages. Pages beyond 10 pages may not be evaluated.

TEMPLATE FORMAT GUIDANCE ONLY

CONTRACTOR'S ORGANIZATIONAL CHART

Notes:

1. *This is only a sample of Organizational Chart. Actual personnel, assignments, and flow chart shall be adapted and provided by the Offeror. As a minimum requirement,*

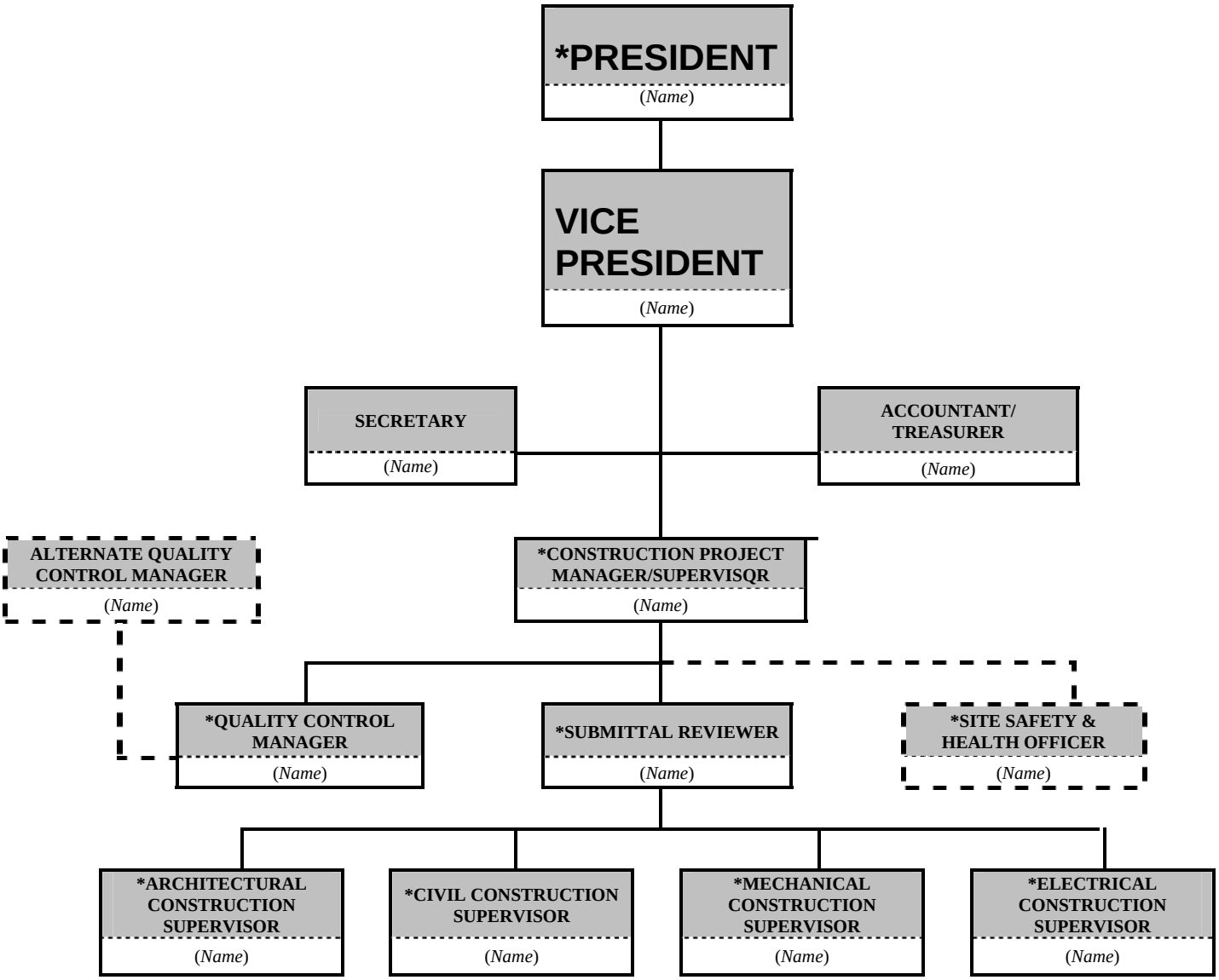

   assignments with asterisk (*) are considered as "Key Personnel".

2. *Additional Charts from Sub-Contractor(s), and/or Partnership or Joint Venture from other Contractor(s) may be submitted in separate sheet(s).*

TEMPLATE FORMAT GUIDANCE ONLY

FACTOR 4

PESONNEL & EQUIPMENT RESOURCES PLAN

SUB-FACTOR 1: PERSONNEL for the following:

- Project Manager for design and for construction
- Quality Control Manager
- Project Architect
- Senior Structural Engineer
- Senior Civil Engineer
- Senior Mechanical Engineer
- Senior Electrical Engineer
- Safety Officer
- Construction Superintendent or Manager
- Construction Foreman (if different from above)
- Safety Manager

All key personnel shall have a minimum of **five** years of professional experience. The following information is required for each of the key personnel below: Information to be provided for key personnel should be limited to no more than **one page** per person.

a. Name:
b. Project Title:
c. Project Responsibilities:
d. Years of Experience: with this Company: with other firms:
e. Education: Degree(s) Year: Specialization:
f. Active Registration: First year Registered:
g. Other relevant experiences & qualifications:

- How many or the percentage of the Afghan ktrs & laborers who will be working on this project:

SUB-FACTOR 2: EQUIPMENT

List of equipment, facilities and other resources available for this project:

SECTION 00120

PROPOSAL EVALUATION AND CONTRACT AWARD

PART 1 – GENERAL

A. BASIS FOR AWARD. The Government intends to make one award for completion of the subject project. The award will be made to the offeror whose proposal represents the best overall value to the Government. Competing proposals shall be evaluated against the requirements of the solicitation in order to assess strengths, weaknesses and associated risks and deficiencies. The tradeoff process of evaluation between non-cost/price and cost/price aspects of the offerors' proposals will be used to determine those offers that may result in award of a contract. Implicit in the Government's evaluation and selection process is its willingness to accept other than the lowest priced offers.

B. PROPOSAL EVALUATION.

B.1 Proposals will be evaluated by a Source Selection Evaluation Board (SSEB). The SSEB will be composed of Corps of Engineers personnel and possibly a customer representative. The identity of SSEB members is confidential and members will not be available for contact or discussion prior to submission of proposals.

B.2 The Volume I (Management Technical) factors are listed in descending order of importance. Sub-factors under each factor are of equal importance. The factors and sub-factors will be evaluated and assigned merit ratings using the adjectives of excellent (E), good (G), satisfactory (S), marginal (M), and unsatisfactory (U). The non-pricing Volume has significantly more importance compared to the pricing factor (Volume II) in the evaluation and selection process.

B.3 Templates. Model templates are provided in this RFP as a possible format available to assist offerors in the preparation of their proposals. Use of the template format is not required. Sections 110 and 120 of this RFP govern and the templates do not supplant or substitute the requirements stated in these sections.

1. VOLUME 1 – MANAGEMENT-TECHNICAL PROPOSAL EVALUATION CRITERIA.

1.1 Content

1.1.1 Factor 1 – Past Evaluations/Performance. This factor may be evaluated by contacting references for **customer satisfaction** and review of **quality performance** evaluations or other information provided by the offeror or obtained by the Government. The evaluators will consider the **relevance** of the past performance information and the success achieved on past projects to determine the rating. In the event that an offeror does not have a record of past performance evaluations, a written explanation of the reasons why no record is available is requested. In the case of an offeror without a record of relevant past performance evaluations

or for whom information on past performance is not available, the offeror will not be evaluated favorably or unfavorably on this factor. A neutral rating will be assigned.

Proposals with the most convincing evidence will receive the highest ratings.

1.1.2 Factor 2 - Experience. The Government will evaluate the relevant work experience of the contractor's company and designer, including subcontractors, on projects similar to that described in this RFP which use the design-build process. Contractor experience with similar relevant projects (type of construction, dollar value, design-build method, complexity, applicable standards such as EMS 385-1-1) will receive a higher rating than those with dissimilar or non-relevant projects. **Of particular relevance is work experience in the immediate area of Badakhshan Province and experience managing multiple project sites concurrently.**

Proposals with the most convincing evidence will receive the highest ratings.

1.1.3 Factor 3 – Project Management Plan.

The Government will evaluate and rate the Project Management Plan which will include the contractor's and designer's key personnel professional qualifications and relevant work experience, the company's quality control procedures, safety plan, their ability to team work (engineers, sub-contractors and the government), their ability to handle cost controls and managing construction time tables completion, their ability to resolve problems, their ability to manage multiple projects concurrently, and describe their interactions with the Corps of Engineers. The Plan will also address how the offeror will adequately manage the project described in this RFP in light of any other ongoing projects and contractual commitments it may have within Afghanistan.

Offers which deviate from RFP specifications or requirements may be considered weak or deficient.

Proposals with the most convincing evidence will receive the highest ratings.

1.1.4 Factor 4 – Personnel and Equipment Resources.

1.1.1.4 Personnel. The Government will evaluate the qualifications and experience of contactor's & designer's personnel for this project. Contractor personnel with experience with **similar relevant** projects (type of construction, dollar value, design-build method, complexity) will receive a higher rating than those with dissimilar or non-relevant project experience. Other personnel including the use of Afghan workers will be evaluated, with greater credit being given for Afghan workers unless logistics of using foreign workers is fully detailed.

Proposals will also address how the offeror will have adequate personnel from the local area (or how they will resolve difficulties that may result from not involving the local populace) for the project described in this RFP in light of any other ongoing projects and contractual commitments it may have within Afghanistan.

Proposals with the most convincing evidence will receive the highest ratings.

1.1.1.4.1 Equipment Resources. The Government will evaluate the adequacy of the offeror's equipment resources to successfully complete the project**.**

Proposals will also address how the offeror will have adequate equipment for the project described in this RFP in light of any other ongoing projects and contractual commitments it may have within Afghanistan. Proposals must address adequacy of equipment in regards to the number of construction sites and the contract performance period.

Proposals with the most convincing evidence will receive the highest ratings.

1.2 Format. Proposal will be evaluated based on adherence to format requirements of Section 00110, Proposal Preparation.

1.3 Notes

1.3.1 Joint Ventures and Teaming Arrangements. Any contractors submitted in the proposal as part of a joint venture must submit a legally binding joint venture agreement. The Government will not evaluate the capability of any contractors that are not included in the joint venture agreement. Joint ventures must include a copy of the legal joint venture signed by an authorized officer from each of the firms comprising the joint venture with the chief executive of each entity identified and a translation in English, if the original agreement is in a language other than English. Incomplete evidence of a joint venture results will not be considered.

If submitting a proposal as a Joint Venture, the experience, past performance, management plan and equipment submittal of each of the Joint Venture Partners can be submitted for the Joint Venture Entity. The experience for each Joint Venture Partner will be considered the experience of the Joint Venture entity.

The proposal may receive a higher rating if the proposal contains evidence of the Joint Venture Entity working successfully together previously on relevant projects.

1.3.2 Credit For Others. If an Offeror wishes to be credited with a subcontractor or supplier, i.e. a firm that is not the prime contractor or part of the joint venture, a letter of commitment signed by the subcontractor must be submitted. The commitment letter must be submitted even if the firm is in some way related to a joint venture partner (for example, the subcontractor is a subsidiary of a joint venture partner, or a subsidiary of a firm to which the joint venture partner is also a subsidiary). In regard to the Experience and Past Performance factors, if an Offeror submits projects demonstrating experience in one of the factors or sub-factors, and that project was completed by a subcontractor, a subsidiary, or a supplier, as opposed to the prime or one of the joint venture partners, the Offeror MUST submit a signed letter of commitment from the contractor who performed and completed the work. If a letter of commitment is not submitted, the experience will not be considered.

2. VOLUME II - PRICE PROPOSAL PREPARATION. The Government will evaluate whether the Volume II price proposals are complete and reasonable. The price proposals will not be assigned adjective ratings but will be assigned a confidence/risk rating. The government will evaluate the proposed pricing to determine the reasonableness and completeness of the proposed price.

C. METHOD OF PROPOSAL EVALUATION

C.1 Proposals will be reviewed to determine if they contain the required minimum procurement and technical data. Incomplete proposals may be eliminated. All forms shall be filled in and all requested data must be provided.

C.2 After the compliance review, the SSEB will begin evaluation and scoring the factors and sub-factors set forth herein. The Price proposal information will be evaluated (not scored) with regard to reasonable and complete pricing and associated risks.

C.3 If necessary, a competitive range may be determined. The competitive range will consist of all proposals which are considered to have a reasonable chance of being selected for award. However, the offeror is reminded that the Government intends to award without discussions and that their best offer should be provided with the initial proposal. After the determination of the competitive range, written and/or oral discussions may be conducted with all offerors within the competitive range. Upon completion of written and/or oral discussions, Final Proposal Revision will be requested.

C.4 The Government may reject any or all proposals and waive minor informalities or minor irregularities in proposals.

D. SELECTION and AWARD. Award will be made to the offeror that, in the judgment of the Contracting Officer, provides the best combination of management and technical capability and reasonable cost. The Government reserves the right to make award to other than the lowest cost offeror, price and other factors considered under the provision of “best value” to the Government.

-- End of Section --

PART 1 - GENERAL

1. DESIGN/BUILD (DB) PROCESS

The facility shall be designed and built by a single DB contractor. The DB contractor may be a single firm or a team of firms that includes registered Architects and Engineers either employed by or subcontracted to the DB contractor. Licensing jurisdiction of Architects and Engineers of record shall be shall be verifiable. The DB contractor shall be the Architect/Engineer-of-Record, whether the DB contractor utilizes services of licensed architects and engineers employed by its firm or subcontracts with independent architectural and/or engineering firm(s). The DB contractor shall be solely liable for design errors and/or omissions and should be insured as the A-E firm against design errors and omissions.

Section 00555, DESIGN CONCEPT DOCUMENTS identifies project documents furnished herewith to be used as the basis for the project design and construction documents. The successful Offeror shall be required to complete the design and construction documentation, and construct the project in compliance with these completed requirements.

2. OUTLINE DESCRIPTION OF THE DB PHASE

No work can begin on any phase of the process until an authorization Clearance for construction for that phase is issued.

2.1 PROPOSAL PHASE

The Proposal Phase includes the period from the time from the issuance of the Request for Proposals (RFP) through the selection process and the final award of the DB contract.

The proposals to be submitted include a Management/Technical Proposal and a Cost/Price Proposal. The contents and organization of the proposal is described in SECTION 00110 - PROPOSAL PREPARATION. The Government will evaluate and award the DB contract to a single Offeror based upon the criteria which are outlined in SECTION 00120 - PROPOSAL EVALUATION AND CONTRACT AWARD.

2.2 DESIGN PHASE

The successful DB contractor shall develop and submit for formal review three submittals and the final design. The DB contractor is encouraged to develop and submit multiple cost saving proposals for innovative design alternatives.

2.2.1 The Design Phase will consist of three parts as follows:

a. Part 1 will be the basic services required to develop the first submittal which represents: 100% complete drawings and specifications for site preparation work, utility construction, paving, foundation, and structural diaphragm of all work and approximately 35% complete drawings and specifications of all other required construction documents. Part I also includes incorporating the revisions identified in the First submittal review.

After approval of the Part 1 drawings and specification submittal, the Government may issue a Clearance for Construction letter to commence with the Build Phase for all site and off-site utilities, clearing, grubbing, rough grading the site, demolition work, parking lot base course, foundation, and structural framing.

A Pre-design meeting will be conducted to distribute as-built drawings to the DB contractor, finalize and clarify technical information, and clarify other necessary information.

b. Part 2 shall include all design services required to complete the second design submittal: 100% complete

drawings and specifications for site preparation work, utility construction, paving, foundation, and structural diaphragm of all work and approximately 65% complete drawings and specifications of all other required construction documents. Part 2 designs shall not begin until an approval of the Part 1 submittal is issued.

c. Part 3 shall include all design services required to complete the third design submittal (100%). Part 3 design shall not begin until an approval of the Part 2 submittal is issued.

3. BUILD PHASE

The Build Phase will be initiated by an authorization letter.

The authorization letter will be provided separately by the Contracting Officer for each phase of the work. The Government may give the DB Contractor authorization for the Build Phase for portions of the work following review and approval of the First Design Submittal.

Weekly coordination meetings will be held at which, as a minimum, the DB Contractor's Project Manager, a representative of the Designer, the site Superintendent, and the Contractor's Quality Control Manager shall be present.

4. PROJECT SCHEDULE:

The following is a ***suggested*** internal design schedule and is subject to modification by the Offeror to suit their particular method of operation. Overall time constraints are required and cannot be changed except by contract modification. Prospective offerors shall be required to submit a complete schedule for design and construction that meets or exceeds the overall time goals of the Government for this project.

Notice to Proceed	following Award of Contract (upon written notification)
Design Phase - Basic Services Pre-design Meeting	within 7 days from Award of Contract
Design Submittal Due	within 30 days following Award of Contract
Submittal Review Conference ***(location TBD)***	within 7 days following submittal review
Incorporate Changes to Submittal (Re-Submit for Review and Approval 100% design submittal)	within 7 days following review conference
Build Phase Authorization for Remainder of Work	Upon approval of design submittal
Total Design and Construction Period	420 days (performance period includes design and construction phases)

Liquidated damages in the amount of **$2,100.00** for every calendar day of delay shall be assessed and charged to the Contractor.

All days are in calendar days.

PART 2 - PRODUCTS (NOT APPLICABLE)

PART 3 - EXECUTION (NOT APPLICABLE)

--END OF SECTION--

SECTION 00555

SECTION 00555

DESIGN CONCEPT DOCUMENTS

PART 1 GENERAL

1.1 GENREAL

This section identifies documents issued with this RFP which establish the concept or basis for the project design. These requirements are minimum standards and may be exceeded by the Offeror. Deviations from these concepts and standards may be approved if considered by the Government to be in its best interests.

The extent of development of these requirements in no way relieves the successful Offeror from the responsibility of completing the design, construction documentation, and construction of the facility in conformance with applicable criteria and codes.

1.2 ENGINEERING AND DESIGN CRITERIA

General design requirements are set forth in this RFP herein. The Specifications Divisions 02 thru 16 is the primary specifications criteria for the design and construction of the project. No design criteria will be furnished by the Afghanistan Engineer District except that which may be required for design and is not available from commercial sources or from the Construction Criteria Base (CCB) or 'Techinfo' website located at http://www.wbdg.org/ccb/ . The references within CCB must be obtained by the A/E if the criteria are required or desired. All design, unless otherwise specified, shall be based on nationally recognized industry standard, criteria, and practice.

1.3 APPENDIX DOCUMENTS

See Appendices for further technical requirements, criteria, and parameters that are a part of this contract.

1.4 SPECIFICATIONS

Specifications included herein shall be utilized as design criteria and minimum standards for the corresponding construction work. The successful Offeror shall develop complete construction specifications using the criteria included in these specifications.

The Government will provide Division 1 specifications sections as required, to the successful Offeror; and these sections shall be included in the final construction specifications without change. The Design Build Contractor shall furnish these specifications on electronic media for the production of construction specifications when requested. These specifications shall be submitted together with other required contractor prepared project construction documents during the Second Design Submittal of the Design Phase, Part II.

1.5 ORDER OF PRECEDENCE

In case of conflict, duplication, or overlap of design criteria specified in the documents referenced in this section, the following order of precedence shall be followed:

1. Drawings.
2. General written design requirements within RFP narrative.
3. General guidance from referenced publications herein.

1.6 MANDATORY CRITERIA

Portions of the design criteria documents provide mandatory criteria. Mandatory criteria consists of drawings, schematics, specifications, and other requirements which shall not be altered or modified for proposal submittal or subsequent final design except for minor adjustments for coordination or except for cost reduction proposals as specified in Section 00150 - THE DESIGN BUILD PROCESS. Non-mandatory criteria shall be considered minimum requirements and may be enhanced, improved, or substituted to better suit design requirements or to improve evaluation consideration. Mandatory requirements are as listed below. All other design criteria shall be considered non-mandatory.

Work Plan
Boundary survey plan
Topographic survey plan- Not Required
Any mandatory criteria referenced within Project Program.
Any other criteria listed herein which is listed, shown or implied as mandatory.

1.7 ADDITIONAL DOCUMENTS/CRITERIA FURNISHED BY THE GOVERNMENT

The following documents will be furnished to the Design/Build Contractor when requested by the Offeror or Contractor:

Design Criteria published by the Government such as Technical Manuals (TM), Engineer Manuals (EM), Engineer Technical Letters (ETL) and other documents related to the design referenced herein which are not available on the Internet, including the CCB website.

Commercial design criteria and specifications will not be furnished by the Government.

Conversion of electronic media to other formats shall be the responsibility of the Design Build Contractor.

PART 2 PRODUCTS (Not Applicable)

PART 3 EXECUTION (Not Applicable)

-- End of Section --

CLAUSES INCORPORATED BY REFERENCE

52.204-6	Data Universal Numbering System (DUNS) Number	OCT 2003
52.214-34	Submission Of Offers In The English Language	APR 1991
52.214-35	Submission Of Offers In U.S. Currency	APR 1991
52.215-1	Instructions to Offerors--Competitive Acquisition	JAN 2004
52.217-4	Evaluation Of Options Exercised At The Time Of Contract Award	JUN 1988
52.222-23	Notice of Requirement for Affirmative Action to Ensure Equal Employment Opportunity for Construction	FEB 1999
52.236-27 Alt I	Site Visit (Construction) (Feb 1995) - Alternate I	FEB 1995
52.236-28	Preparation of Proposals--Construction	OCT 1997
252.204-7001	Commercial And Government Entity (CAGE) Code Reporting	AUG 1999

CLAUSES INCORPORATED BY FULL TEXT

52.214-5000 APPARENT CLERICAL MISTAKES (MAR 1995)--EFARS

(a) For the purpose of initial evaluations of bids, the following will be utilized in the resolving arithmetic discrepancies found on the face of bidding schedule as submitted by the bidder:

(1) Obviously misplaced decimal points will be corrected;

(2) Discrepancy between unit price and extended price, the unit price will govern;

(3) Apparent errors in extension of unit prices will be corrected;

(4) Apparent errors in addition of lump-sum and extended prices will be corrected.

(b) For the purpose of bid evaluation, the government will proceed on the assumption that the bidder intends his bid to be evaluated on basis of the unit prices, the totals arrived at by resolution of arithmetic discrepancies as provided above and the bid will be so reflected on the abstract of bids.

(c) These correction procedures shall not be used to resolve any ambiguity concerning which bid is low.

(End of statement)

52.215-20 REQUIREMENTS FOR COST OR PRICING DATA OR INFORMATION OTHER THAN COST OR PRICING DATA (OCT 1997)

(a) Exceptions from cost or pricing data. (1) In lieu of submitting cost or pricing data, offerors may submit a written request for exception by submitting the information described in the following subparagraphs. The Contracting Officer may require additional supporting information, but only to the extent necessary to determine whether an exception should be granted, and whether the price is fair and reasonable.

(i) Identification of the law or regulation establishing the price offered. If the price is controlled under law by periodic rulings, reviews, or similar actions of a governmental body, attach a copy of the controlling document, unless it was previously submitted to the contracting office.

(ii) Commercial item exception. For a commercial item exception, the offeror shall submit, at a minimum, information on prices at which the same item or similar items have previously been sold in the commercial market that is adequate for evaluating the reasonableness of the price for this acquisition. Such information may include--

(A) For catalog items, a copy of or identification of the catalog and its date, or the appropriate pages for the offered items, or a statement that the catalog is on file in the buying office to which the proposal is being submitted. Provide a copy or describe current discount policies and price lists (published or unpublished), e.g.,

wholesale, original equipment manufacturer, or reseller. Also explain the basis of each offered price and its relationship to the established catalog price, including how the proposed price relates to the price of recent sales in quantities similar to the proposed quantities;

(B) For market-priced items, the source and date or period of the market quotation or other basis for market price, the base amount, and applicable discounts. In addition, describe the nature of the market;

(C) For items included on an active Federal Supply Service Multiple Award Schedule contract, proof that an exception has been granted for the schedule item.

(2) The offeror grants the Contracting Officer or an authorized representative the right to examine, at any time before award, books, records, documents, or other directly pertinent records to verify any request for an exception under this provision, and the reasonableness of price. For items priced using catalog or market prices, or law or regulation, access does not extend to cost or profit information or other data relevant solely to the offeror's determination of the prices to be offered in the catalog or marketplace.

(b) Requirements for cost or pricing data. If the offeror is not granted an exception from the requirement to submit cost or pricing data, the following applies:

(1) The offeror shall prepare and submit cost or pricing data and supporting attachments in accordance with Table 15-2 of FAR 15.408.

As soon as practicable after agreement on price, but before contract award (except for unpriced actions such as letter contracts), the offeror shall submit a Certificate of Current Cost or Pricing Data, as prescribed by FAR 15.406-2.

(End of provision)

52.216-1 TYPE OF CONTRACT (APR 1984)

The Government contemplates award of a Firm Fixes Price contract resulting from this solicitation.

(End of provision)

52.233-2 SERVICE OF PROTEST (SEP 2006)

(a) Protests, as defined in section 33.101 of the Federal Acquisition Regulation, that are filed directly with an agency, and copies of any protests that are filed with the Government Accountability Office (GAO), shall be served on the Contracting Officer (addressed as follows) by obtaining written and dated acknowledgment of receipt from **U.S. ARMY CORPS OF ENGINEERS, HOUSE #1 STREET #1, WEST WAZIR AKBAR KHAN**
(BEHIND AMANI HIGH SCHOOL).

(b) The copy of any protest shall be received in the office designated above within one day of filing a protest with the GAO.

(End of provision)

52.252-1 SOLICITATION PROVISIONS INCORPORATED BY REFERENCE (FEB 1998)

This solicitation incorporates one or more solicitation provisions by reference, with the same force and effect as if they were given in full text. Upon request, the Contracting Officer will make their full text available. The offeror is cautioned that the listed provisions may include blocks that must be completed by the offeror and submitted with its quotation or offer. In lieu of submitting the full text of those provisions, the offeror may identify the provision by paragraph identifier and provide the appropriate information with its quotation or offer. Also, the full text of a solicitation provision may be accessed electronically at this/these address(es):

http://www.farsite.hill.af.mil

(End of provision

Section 00600 - Representations & Certifications

CLAUSES INCORPORATED BY REFERENCE

52.203-11	Certification And Disclosure Regarding Payments To Influence Certain Federal Transactions	SEP 2007
52.222-38	Compliance With Veterans' Employment Reporting Requirements	DEC 2001
252.209-7001	Disclosure of Ownership or Control by the Government of a Terrorist Country	OCT 2006
252.225-7031	Secondary Arab Boycott Of Israel	JUN 2005
252.225-7042	Authorization to Perform	APR 2003
252.247-7022	Representation Of Extent Of Transportation Of Supplies By Sea	AUG 1992

CLAUSES INCORPORATED BY FULL TEXT

52.203-2 CERTIFICATE OF INDEPENDENT PRICE DETERMINATION (APR 1985)

(a) The offeror certifies that --

(1) The prices in this offer have been arrived at independently, without, for the purpose of restricting competition, any consultation, communication, or agreement with any other offeror or competitor relating to –

(i) Those prices,

(ii) The intention to submit an offer, or

(iii) The methods of factors used to calculate the prices offered:

(2) The prices in this offer have not been and will not be knowingly disclosed by the offeror, directly or indirectly, to any other offeror or competitor before bid opening (in the case of a sealed bid solicitation) or contract award (in the case of a negotiated solicitation) unless otherwise required by law; and

(3) No attempt has been made or will be made by the offeror to induce any other concern to submit or not to submit an offer for the purpose of restricting competition.

(b) Each signature on the offer is considered to be a certification by the signatory that the signatory --

(1) Is the person in the offeror's organization responsible for determining the prices offered in this bid or proposal, and that the signatory has not participated and will not participate in any action contrary to subparagraphs (a)(1) through (a)(3) of this provision; or

(2) (i) Has been authorized, in writing, to act as agent for the following principals in certifying that those principals have not participated, and will not participate in any action contrary to subparagraphs (a)(1) through (a)(3) of this provison _____ (insert full name of person(s) in the offeror's organization responsible for determining the prices offered in this bid or proposal, and the title of his or her position in the offeror's organization);

(ii) As an authorized agent, does certify that the principals named in subdivision (b)(2)(i) above have not participated, and will not participate, in any action contrary to subparagraphs (a)(1) through (a)(3) above; and

(iii) As an agent, has not personally participated, and will not participate, in any action contrary to subparagraphs (a)(1) through (a)(3) of this provision.

(c) If the offeror deletes or modifies subparagraph (a)(2) of this provision, the offeror must furnish with its offer a signed statement setting forth in detail the circumstances of the disclosure.

(End of clause)

52.204-3 TAXPAYER IDENTIFICATION (OCT 1998)

(a) Definitions.

Common parent, as used in this provision, means that corporate entity that owns or controls an affiliated group of corporations that files its Federal income tax returns on a consolidated basis, and of which the offeror is a member.

Taxpayer Identification Number (TIN), as used in this provision, means the number required by the Internal Revenue Service (IRS) to be used by the offeror in reporting income tax and other returns. The TIN may be either a Social Security Number or an Employer Identification Number.

(b) All offerors must submit the information required in paragraphs (d) through (f) of this provision to comply with debt collection requirements of 31 U.S.C. 7701(c) and 3325(d), reporting requirements of 26 U.S.C. 6041, 6041A, and 6050M, and implementing regulations issued by the IRS. If the resulting contract is subject to the payment reporting requirements described in Federal Acquisition Regulation (FAR) 4.904, the failure or refusal by the offeror to furnish the information may result in a 31 percent reduction of payments otherwise due under the contract.

(c) The TIN may be used by the Government to collect and report on any delinquent amounts arising out of the offeror's relationship with the Government (31 U.S.C. 7701(c)(3)). If the resulting contract is subject to the payment reporting requirements described in FAR 4.904, the TIN provided hereunder may be matched with IRS records to verify the accuracy of the offeror's TIN.

(d) Taxpayer Identification Number (TIN).

___ TIN:.----------

___ TIN has been applied for.

___ TIN is not required because:

___ Offeror is a nonresident alien, foreign corporation, or foreign partnership that does not have income effectively connected with the conduct of a trade or business in the United States and does not have an office or place of business or a fiscal paying agent in the United States;

___ Offeror is an agency or instrumentality of a foreign government;

___ Offeror is an agency or instrumentality of the Federal Government.

(e) Type of organization.

___ Sole proprietorship;

___ Partnership;

___ Corporate entity (not tax-exempt);

___ Corporate entity (tax-exempt);

___ Government entity (Federal, State, or local);

___ Foreign government;

___ International organization per 26 CFR 1.6049-4;

___ Other----------

(f) Common parent.

___ Offeror is not owned or controlled by a common parent as defined in paragraph (a) of this provision.

___ Name and TIN of common parent:

Name----------

TIN----------

(End of provision)

52.204-8 ANNUAL REPRESENTATIONS AND CERTIFICATIONS (JAN 2006)

(a)(1) The North American Industry Classification System (NAICS) code for this acquisition is 236220.

(2) The small business size standard is $31 million.

(3) The small business size standard for a concern which submits an offer in its own name, other than on a construction or service contract, but which proposes to furnish a product which it did not itself manufacture, is 500 employees.

(b)(1) If the clause at 52.204-7, Central Contractor Registration, is included in this solicitation, paragraph (c) of this provision applies.

(2) If the clause at 52.204-7 is not included in this solicitation, and the offeror is currently registered in CCR, and has completed the ORCA electronically, the offeror may choose to use paragraph (b) of this provision instead of

completing the corresponding individual representations and certifications in the solicitation. The offeror shall indicate which option applies by checking one of the following boxes:

(__) Paragraph (c) applies.

(__) Paragraph (c) does not apply and the offeror has completed the individual representations and certifications in the solicitation.

(c) The offeror has completed the annual representations and certifications electronically via the Online Representations and Certifications Application (ORCA) website at http://orca.bpn.gov. After reviewing the ORCA database information, the offeror verifies by submission of the offer that the representations and certifications currently posted electronically have been entered or updated within the last 12 months, are current, accurate, complete, and applicable to this solicitation (including the business size standard applicable to the NAICS code referenced for this solicitation), as of the date of this offer and are incorporated in this offer by reference (see FAR 4.1201); except for the changes identified below [offeror to insert changes, identifying change by clause number, title, date]. These amended representation(s) and/or certification(s) are also incorporated in this offer and are current, accurate, and complete as of the date of this offer.

FAR Clause	Title	Date	Change

Any changes provided by the offeror are applicable to this solicitation only, and do not result in an update to the representations and certifications posted on ORCA.

(End of Provision)

52.209-5 CERTIFICATION REGARDING DEBARMENT, SUSPENSION, PROPOSED DEBARMENT, AND OTHER RESPONSIBILITY MATTERS (DEC 2001)

(a)(1) The Offeror certifies, to the best of its knowledge and belief, that-

(i) The Offeror and/or any of its Principals-

(A) Are ( ) are not ( ) presently debarred, suspended, proposed for debarment, or declared ineligible for the award of contracts by any Federal agency;

(B) Have ( ) have not ( ), within a three-year period preceding this offer, been convicted of or had a civil judgment rendered against them for: commission of fraud or a criminal offense in connection with obtaining, attempting to obtain, or performing a public (Federal, state, or local) contract or subcontract; violation of Federal or state antitrust statutes relating to the submission of offers; or commission of embezzlement, theft, forgery, bribery, falsification or destruction of records, making false statements, tax evasion, or receiving stolen property; and

(C) Are ( ) are not ( ) presently indicted for, or otherwise criminally or civilly charged by a governmental entity with, commission of any of the offenses enumerated in paragraph (a)(1)(i)(B) of this provision.

(ii) The Offeror has ( ) has not ( ), within a three-year period preceding this offer, had one or more contracts terminated for default by any Federal agency.

(2) "Principals," for the purposes of this certification, means officers; directors; owners; partners; and, persons having primary management or supervisory responsibilities within a business entity (e.g., general manager; plant manager; head of a subsidiary, division, or business segment, and similar positions).

This Certification Concerns a Matter Within the Jurisdiction of an Agency of the United States and the Making of a False, Fictitious, or Fraudulent Certification May Render the Maker Subject to Prosecution Under Section 1001, Title 18, United States Code.

(b) The Offeror shall provide immediate written notice to the Contracting Officer if, at any time prior to contract award, the Offeror learns that its certification was erroneous when submitted or has become erroneous by reason of changed circumstances.

(c) A certification that any of the items in paragraph (a) of this provision exists will not necessarily result in withholding of an award under this solicitation. However, the certification will be considered in connection with a determination of the Offeror's responsibility. Failure of the Offeror to furnish a certification or provide such additional information as requested by the Contracting Officer may render the Offeror nonresponsible.

(d) Nothing contained in the foregoing shall be construed to require establishment of a system of records in order to render, in good faith, the certification required by paragraph (a) of this provision. The knowledge and information of an Offeror is not required to exceed that which is normally possessed by a prudent person in the ordinary course of business dealings.

(e) The certification in paragraph (a) of this provision is a material representation of fact upon which reliance was placed when making award. If it is later determined that the Offeror knowingly rendered an erroneous certification, in addition to other remedies available to the Government, the Contracting Officer may terminate the contract resulting from this solicitation for default.

(End of provision)

52.222-22 PREVIOUS CONTRACTS AND COMPLIANCE REPORTS (FEB 1999)

The offeror represents that --

(a) ( ) It has, ( ) has not participated in a previous contract or subcontract subject to the Equal Opportunity clause of this solicitation;

(b) ( ) It has, ( ) has not, filed all required compliance reports; and

(c) Representations indicating submission of required compliance reports, signed by proposed subcontractors, will be obtained before subcontract awards.

(End of provision)

52.230-1 COST ACCOUNTING STANDARDS NOTICES AND CERTIFICATION (JUN 2000)

Note: This notice does not apply to small businesses or foreign governments. This notice is in three parts, identified by Roman numerals I through III.

Offerors shall examine each part and provide the requested information in order to determine Cost Accounting Standards (CAS) requirements applicable to any resultant contract.

If the offeror is an educational institution, Part II does not apply unless the contemplated contract will be subject to full or modified CAS coverage pursuant to 48 CFR 9903.201-2(c)(5) or 9903.201-2(c)(6), respectively.

I. DISCLOSURE STATEMENT--COST ACCOUNTING PRACTICES AND CERTIFICATION

(a) Any contract in excess of $500,000 resulting from this solicitation will be subject to the requirements of the Cost Accounting Standards Board (48 CFR Chapter 99), except for those contracts which are exempt as specified in 48 CFR 9903.201-1.

(b) Any offeror submitting a proposal which, if accepted, will result in a contract subject to the requirements of 48 CFR Chapter 99 must, as a condition of contracting, submit a Disclosure Statement as required by 48 CFR 9903.202. When required, the Disclosure Statement must be submitted as a part of the offeror's proposal under this solicitation unless the offeror has already submitted a Disclosure Statement disclosing the practices used in connection with the pricing of this proposal. If an applicable Disclosure Statement has already been submitted, the offeror may satisfy the requirement for submission by providing the information requested in paragraph (c) of Part I of this provision.

CAUTION: In the absence of specific regulations or agreement, a practice disclosed in a Disclosure Statement shall not, by virtue of such disclosure, be deemed to be a proper, approved, or agreed-to practice for pricing proposals or accumulating and reporting contract performance cost data.

(c) Check the appropriate box below:

(1) Certificate of Concurrent Submission of Disclosure Statement.

The offeror hereby certifies that, as a part of the offer, copies of the Disclosure Statement have been submitted as follows: (i) original and one copy to the cognizant Administrative Contracting Officer (ACO) or cognizant Federal agency official authorized to act in that capacity (Federal official), as applicable, and (ii) one copy to the cognizant Federal auditor.

(Disclosure must be on Form No. CASB DS-1 or CASB DS-2, as applicable. Forms may be obtained from the cognizant ACO or Federal official and/or from the loose-leaf version of the Federal Acquisition Regulation.)

Date of Disclosure Statement: _____ Name and Address of Cognizant ACO or Federal Official Where Filed: _____

The offeror further certifies that the practices used in estimating costs in pricing this proposal are consistent with the cost accounting practices disclosed in the Disclosure Statement.

(2) Certificate of Previously Submitted Disclosure Statement.

The offeror hereby certifies that the required Disclosure Statement was filed as follows:

Date of Disclosure Statement: _____ Name and Address of Cognizant ACO or Federal Official Where Filed: _____

The offeror further certifies that the practices used in estimating costs in pricing this proposal are consistent with the cost accounting practices disclosed in the applicable Disclosure Statement.

(3) Certificate of Monetary Exemption.

The offeror hereby certifies that the offeror, together with all divisions, subsidiaries, and affiliates under common control, did not receive net awards of negotiated prime contracts and subcontracts subject to CAS totaling more than $50 million (of which at least one award exceeded $1 million) in the cost accounting period immediately

preceding the period in which this proposal was submitted. The offeror further certifies that if such status changes before an award resulting from this proposal, the offeror will advise the Contracting Officer immediately.

(4) Certificate of Interim Exemption.

The offeror hereby certifies that (i) the offeror first exceeded the monetary exemption for disclosure, as defined in (3) of this subsection, in the cost accounting period immediately preceding the period in which this offer was submitted and (ii) in accordance with 48 CFR 9903.202-1, the offeror is not yet required to submit a Disclosure Statement. The offeror further certifies that if an award resulting from this proposal has not been made within 90 days after the end of that period, the offeror will immediately submit a revised certificate to the Contracting Officer, in the form specified under subparagraph (c)(1) or (c)(2) of Part I of this provision, as appropriate, to verify submission of a completed Disclosure Statement.

CAUTION: Offerors currently required to disclose because they were awarded a CAS-covered prime contract or subcontract of $50 million or more in the current cost accounting period may not claim this exemption (4). Further, the exemption applies only in connection with proposals submitted before expiration of the 90-day period following the cost accounting period in which the monetary exemption was exceeded.

II. COST ACCOUNTING STANDARDS--ELIGIBILITY FOR MODIFIED CONTRACT COVERAGE

If the offeror is eligible to use the modified provisions of 48 CFR 9903.201-2(b) and elects to do so, the offeror shall indicate by checking the box below. Checking the box below shall mean that the resultant contract is subject to the Disclosure and Consistency of Cost Accounting Practices clause in lieu of the Cost Accounting Standards clause.

( ) The offeror hereby claims an exemption from the Cost Accounting Standards clause under the provisions of 48 CFR 9903.201-2(b) and certifies that the offeror is eligible for use of the Disclosure and Consistency of Cost Accounting Practices clause because during the cost accounting period immediately preceding the period in which this proposal was submitted, the offeror received less than $50 million in awards of CAS-covered prime contracts and subcontracts. The offeror further certifies that if such status changes before an award resulting from this proposal, the offeror will advise the Contracting Officer immediately.

CAUTION: An offeror may not claim the above eligibility for modified contract coverage if this proposal is expected to result in the award of a CAS-covered contract of $50 million or more or if, during its current cost accounting period, the offeror has been awarded a single CAS-covered prime contract or subcontract of $25 million or more.

III. ADDITIONAL COST ACCOUNTING STANDARDS APPLICABLE TO EXISTING CONTRACTS

The offeror shall indicate below whether award of the contemplated contract would, in accordance with subparagraph (a)(3) of the Cost Accounting Standards clause, require a change in established cost accounting practices affecting existing contracts and subcontracts.

( ) YES ( ) NO

(End of clause)

Section 00700 - Contract Clauses

<u>CAVEATS</u>

Section 100 – 52.222-23
Section 600 – 52.222-22
Section 700 – 52.222-21, 26, 27, 29, 35, 36, 37
“Only applicable if contractor recruits personnel within the US.”

252.247-7024 “Only applicable if contractor gave a negative response to 252.247-7022.”

52.204-3, 52.232-38, 52.204-6, 252.204-7001, 52.232-34
“Only applicable to contractors that are not to be registered in the CCR database.”

52.232-33, 252.204-7004)“Only applicable to contractors that are to be registered in the CCR database.”

252.229-7000, 252.229-7001
“Only applicable if contractor is a foreign concern.”

CLAUSES INCORPORATED BY REFERENCE

52.202-1	Definitions	JUL 2004
52.203-3	Gratuities	APR 1984
52.203-5	Covenant Against Contingent Fees	APR 1984
52.203-6	Restrictions On Subcontractor Sales To The Government	SEP 2006
52.203-7	Anti-Kickback Procedures	JUL 1995
52.203-8	Cancellation, Rescission, and Recovery of Funds for Illegal or Improper Activity	JAN 1997
52.203-10	Price Or Fee Adjustment For Illegal Or Improper Activity	JAN 1997
52.203-12	Limitation On Payments To Influence Certain Federal Transactions	SEP 2007
52.204-4	Printed or Copied Double-Sided on Recycled Paper	AUG 2000
52.209-6	Protecting the Government's Interest When Subcontracting With Contractors Debarred, Suspended, or Proposed for Debarment	SEP 2006
52.215-2	Audit and Records--Negotiation	JUN 1999
52.215-11	Price Reduction for Defective Cost or Pricing Data--Modifications	OCT 1997
52.215-13	Subcontractor Cost or Pricing Data--Modifications	OCT 1997
52.215-15	Pension Adjustments and Asset Reversions	OCT 2004
52.215-18	Reversion or Adjustment of Plans for Postretirement Benefits (PRB) Other than Pensions	JUL 2005
52.215-21	Requirements for Cost or Pricing Data or Information Other Than Cost or Pricing Data--Modifications	OCT 1997
52.222-21	Prohibition Of Segregated Facilities	FEB 1999
52.222-26	Equal Opportunity	MAR 2007
52.222-27	Affirmative Action Compliance Requirements for Construction	FEB 1999
52.222-35	Equal Opportunity For Special Disabled Veterans, Veterans of the Vietnam Era, and Other Eligible Veterans	SEP 2006
52.222-36	Affirmative Action For Workers With Disabilities	JUN 1998
52.222-37	Employment Reports On Special Disabled Veterans, Veterans Of The Vietnam Era, and Other Eligible Veterans	SEP 2006
52.225-13	Restrictions on Certain Foreign Purchases	FEB 2006
52.225-14	Inconsistency Between English Version And Translation Of Contract	FEB 2000
52.227-4	Patent Indemnity-Construction Contracts	APR 1984
52.228-3	Worker's Compensation Insurance (Defense Base Act)	APR 1984
52.229-6	Taxes--Foreign Fixed-Price Contracts	JUN 2003

52.232-5	Payments under Fixed-Price Construction Contracts	SEP 2002
52.232-17	Interest	JUN 1996
52.232-18	Availability Of Funds	APR 1984
52.232-27	Prompt Payment for Construction Contracts	SEP 2005
52.232-33	Payment by Electronic Funds Transfer--Central Contractor Registration	OCT 2003
52.232-34	Payment By Electronic Funds Transfer--Other Than Central Contractor Registration	MAY 1999
52.232-38	Submission of Electronic Funds Transfer Information with Offer	MAY 1999
52.233-1	Disputes	JUL 2002
52.233-3	Protest After Award	AUG 1996
52.233-4	Applicable Law for Breach of Contract Claim	OCT 2004
52.236-1	Performance of Work by the Contractor	APR 1984
52.236-2	Differing Site Conditions	APR 1984
52.236-3	Site Investigation and Conditions Affecting the Work	APR 1984
52.236-5	Material and Workmanship	APR 1984
52.236-6	Superintendence by the Contractor	APR 1984
52.236-7	Permits and Responsibilities	NOV 1991
52.236-8	Other Contracts	APR 1984
52.236-9	Protection of Existing Vegetation, Structures, Equipment, Utilities, and Improvements	APR 1984
52.236-10	Operations and Storage Areas	APR 1984
52.236-11	Use and Possession Prior to Completion	APR 1984
52.236-12	Cleaning Up	APR 1984
52.236-13 Alt I	Accident Prevention (Nov 1991) - Alternate I	NOV 1991
52.236-15	Schedules for Construction Contracts	APR 1984
52.236-17	Layout of Work	APR 1984
52.236-21 Alt I	Specifications and Drawings for Construction (Feb 1997) - Alternate I	APR 1984
52.236-23	Responsibility of the Architect-Engineer Contractor	APR 1984
52.236-24	Work Oversight in Architect-Engineer Contracts	APR 1984
52.236-25	Requirements for Registration of Designers	JUN 2003
52.236-26	Preconstruction Conference	FEB 1995
52.242-13	Bankruptcy	JUL 1995
52.242-14	Suspension of Work	APR 1984
52.243-4	Changes	JUN 2007
52.243-6	Change Order Accounting	APR 1984
52.244-4	Subcontractors and Outside Associates and Consultants (Architect-Engineer Services)	AUG 1998
52.244-5	Competition In Subcontracting	DEC 1996
52.246-21	Warranty of Construction	MAR 1994
52.247-34	F.O.B. Destination	NOV 1991
52.247-63	Preference For U.S. Flag Air Carriers	JUN 2003
52.248-3	Value Engineering-Construction	SEP 2006
52.249-2 Alt I	Termination for Convenience of the Government (Fixed-Price) (May 2004) - Alternate I	SEP 1996
52.249-10	Default (Fixed-Price Construction)	APR 1984
52.253-1	Computer Generated Forms	JAN 1991
252.201-7000	Contracting Officer's Representative	DEC 1991
252.203-7001	Prohibition On Persons Convicted of Fraud or Other Defense-Contract-Related Felonies	DEC 2004
252.204-7000	Disclosure Of Information	DEC 1991
252.204-7003	Control Of Government Personnel Work Product	APR 1992

252.209-7004	Subcontracting With Firms That Are Owned or Controlled By The Government of a Terrorist Country	DEC 2006
252.215-7000	Pricing Adjustments	DEC 1991
252.215-7002	Cost Estimating System Requirements	DEC 2006
252.222-7002	Compliance With Local Labor Laws (Overseas)	JUN 1997
252.222-7006	Combating Trafficking in Persons	OCT 2006
252.223-7002	Safety Precautions For Ammunition And Explosives	MAY 1994
252.223-7003	Changes In Place Of Performance--Ammunition And Explosives	DEC 1991
252.223-7004	Drug Free Work Force	SEP 1988
252.225-7005	Identification Of Expenditures In The United States	JUN 2005
252.225-7041	Correspondence in English	JUN 1997
252.225-7043	Antiterrorism/Force Protection Policy for Defense Contractors Outside the United States	MAR 2006
252.227-7013	Rights in Technical Data--Noncommercial Items	NOV 1995
252.227-7022	Government Rights (Unlimited)	MAR 1979
252.227-7023	Drawings and Other Data to become Property of Government	MAR 1979
252.227-7030	Technical Data--Withholding Of Payment	MAR 2000
252.227-7033	Rights in Shop Drawings	APR 1966
252.229-7000	Invoices Exclusive of Taxes or Duties	JUN 1997
252.229-7001	Tax Relief	JUN 1997
252.231-7000	Supplemental Cost Principles	DEC 1991
252.232-7003	Electronic Submission of Payment Requests	MAR 2007
252.232-7008	Assignment of Claims (Overseas)	JUN 1997
252.232-7010	Levies on Contract Payments	DEC 2006
252.233-7001	Choice of Law (Overseas)	JUN 1997
252.236-7000	Modification Proposals-Price Breakdown	DEC 1991
252.236-7001	Contract Drawings, and Specifications	AUG 2000
252.236-7008	Contract Prices-Bidding Schedules	DEC 1991
252.243-7001	Pricing Of Contract Modifications	DEC 1991
252.243-7002	Requests for Equitable Adjustment	MAR 1998
252.247-7023	Transportation of Supplies by Sea	MAY 2002
252.247-7024	Notification Of Transportation Of Supplies By Sea	MAR 2000

CLAUSES INCORPORATED BY FULL TEXT

52.215-19 NOTIFICATION OF OWNERSHIP CHANGES (OCT 1997)

(a) The Contractor shall make the following notifications in writing:

(1) When the Contractor becomes aware that a change in its ownership has occurred, or is certain to occur, that could result in changes in the valuation of its capitalized assets in the accounting records, the Contractor shall notify the Administrative Contracting Officer (ACO) within 30 days.

(2) The Contractor shall also notify the ACO within 30 days whenever changes to asset valuations or any other cost changes have occurred or are certain to occur as a result of a change in ownership.

(b) The Contractor shall--

(1) Maintain current, accurate, and complete inventory records of assets and their costs;

(2) Provide the ACO or designated representative ready access to the records upon request;

(3) Ensure that all individual and grouped assets, their capitalized values, accumulated depreciation or amortization, and remaining useful lives are identified accurately before and after each of the Contractor's ownership changes; and

(4) Retain and continue to maintain depreciation and amortization schedules based on the asset records maintained before each Contractor ownership change.

The Contractor shall include the substance of this clause in all subcontracts under this contract that meet the applicability requirement of FAR 15.408(k).

(End of clause)

52.222-29 NOTIFICATION OF VISA DENIAL (JIUN 2003)

It is a violation of Executive Order 11246 for a Contractor to refuse to employ any applicant or not to assign any person hired in the United States, Puerto Rico, the Northern Mariana Islands, American Samoa, Guam, the U.S. Virgin Islands, or Wake Island, on the basis that the individual's race, color, religion, sex, or national origin is not compatible with the policies of the country where or for whom the work will be performed (41 CFR 60-1.10). The Contractor shall notify the U.S. Department of State, Assistant Secretary, Bureau of Political-Military Affairs (PM), 2201 C Street NW., Room 6212, Washington, DC 20520, and the U.S. Department of Labor, Deputy Assistant Secretary for Federal Contract Compliance, when it has knowledge of any employee or potential employee being denied an entry visa to a country where this contract will be performed, and it believes the denial is attributable to the race, color, religion, sex, or national origin of the employee or potential employee.

(End of clause)

52.249-5000 BASIS FOR SETTLEMENT OF PROPOSALS

Actual costs will be used to determine equipment costs for a settlement proposal submitted on the total cost basis under FAR 49.206-2(b). In evaluating a terminations settlement proposal using the total cost basis, the following principles will be applied to determine allowable equipment costs:

(1) Actual costs for each piece of equipment, or groups of similar serial or series equipment, need not be available in the contractor's accounting records to determine total actual equipment costs.

(2) If equipment costs have been allocated to a contract using predetermined rates, those charges will be adjusted to actual costs.

(3) Recorded job costs adjusted for unallowable expenses will be used to determine equipment operating expenses.

(4) Ownership costs (depreciation) will be determined using the contractor's depreciation schedule (subject to the provisions of FAR 31.205-11).

(5) License, taxes, storage and insurance costs are normally recovered as an indirect expense and unless the contractor charges these costs directly to contracts, they will be recovered through the indirect expense rate.

(End of Clause)

52.252-2 CLAUSES INCORPORATED BY REFERENCE (FEB 1998)

This contract incorporates one or more clauses by reference, with the same force and effect as if they were given in full text. Upon request, the Contracting Officer will make their full text available. Also, the full text of a clause may be accessed electronically at this/these address(es):

http://www.farsite.hill.af.mil

(End of clause)

252.204-7004 CENTRAL CONTRACTOR REGISTRATION (52.204-7) ALTERNATE A (SEP 2007)

(a) Definitions. As used in this clause--

“Central Contractor Registration (CCR) database” means the primary Government repository for contractor information required for the conduct of business with the Government.

“Commercial and Government Entity (CAGE) code” means--

(1) A code assigned by the Defense Logistics Information Service (DLIS) to identify a commercial or Government entity; or

(2) A code assigned by a member of the North Atlantic Treaty Organization that DLIS records and maintains in the CAGE master file. This type of code is known as an “NCAGE code.”

“Data Universal Numbering System (DUNS) number” means the 9-digit number assigned by Dun and Bradstreet, Inc. (D&B) to identify unique business entities.

“Data Universal Numbering System +4 (DUNS+4) number” means the DUNS number assigned by D&B plus a 4-character suffix that may be assigned by a business concern. (D&B has no affiliation with this 4-character suffix.) This 4-character suffix may be assigned at the discretion of the business concern to establish additional CCR records for identifying alternative Electronic Funds Transfer (EFT) accounts (see Subpart 32.11 of the Federal Acquisition Regulation) for the same parent concern.

“Registered in the CCR database” means that--

(1) The Contractor has entered all mandatory information, including the DUNS number or the DUNS+4 number, into the CCR database;

(2) The Contractor's CAGE code is in the CCR database; and

(3) The Government has validated all mandatory data fields, to include validation of the Taxpayer Identification Number (TIN) with the Internal Revenue Service, and has marked the records ``Active.'' The Contractor will be required to provide consent for TIN validation to the Government as part of the CCR registration process.

(b)(1) By submission of an offer, the offeror acknowledges the requirement that a prospective awardee shall be registered in the CCR database prior to award, during performance, and through final payment of any contract, basic agreement, basic ordering agreement, or blanket purchasing agreement resulting from this solicitation.

(2) The offeror shall enter, in the block with its name and address on the cover page of its offer, the annotation "DUNS" or "DUNS +4" followed by the DUNS or DUNS +4 number that identifies the offeror's name and address exactly as stated in the offer. The DUNS number will be used by the Contracting Officer to verify that the offeror is registered in the CCR database.

(c) If the offeror does not have a DUNS number, it should contact Dun and Bradstreet directly to obtain one.

(1) An offeror may obtain a DUNS number-

(i) If located within the United States, by calling Dun and Bradstreet at 1-866-705-5711 or via the Internet at http://www.dnb.com; or

(ii) If located outside the United States, by contacting the local Dun and Bradstreet office.

(2) The offeror should be prepared to provide the following information:

(i) Company legal business.

(ii) Tradestyle, doing business, or other name by which your entity is commonly recognized.

(iii) Company Physical Street Address, City, State, and Zip Code.

(iv) Company Mailing Address, City, State and Zip Code (if separate from physical).

(v) Company Telephone Number.

(vi) Date the company was started.

(vii) Number of employees at your location.

(viii) Chief executive officer/key manager.

(ix) Line of business (industry).

(x) Company Headquarters name and address (reporting relationship within your entity).

(d) If the Offeror does not become registered in the CCR database in the time prescribed by the Contracting Officer, the Contracting Officer will proceed to award to the next otherwise successful registered Offeror.

(e) Processing time, which normally takes 48 hours, should be taken into consideration when registering. Offerors who are not registered should consider applying for registration immediately upon receipt of this solicitation.

(f) The Contractor is responsible for the accuracy and completeness of the data within the CCR database, and for any liability resulting from the Government's reliance on inaccurate or incomplete data. To remain registered in the CCR database after the initial registration, the Contractor is required to review and update on an annual basis from the date of initial registration or subsequent updates its information in the CCR database to ensure it is current, accurate and complete. Updating information in the CCR does not alter the terms and conditions of this contract and is not a substitute for a properly executed contractual document.

(g)
(1)
(i) If a Contractor has legally changed its business name, "doing business as" name, or division name (whichever is shown on the contract), or has transferred the assets used in performing the contract, but has not completed the necessary requirements regarding novation and change-of-name agreements in Subpart 42.12, the Contractor shall provide the responsible Contracting Officer a minimum of one business day's written notification of its intention to (A) change the name in the CCR database; (B) comply with the requirements of Subpart 42.12 of the FAR; and (C) agree in writing to the timeline and procedures specified by the responsible Contracting Officer. The Contractor must provide with the notification sufficient documentation to support the legally changed name.

(ii) If the Contractor fails to comply with the requirements of paragraph (g)(1)(i) of this clause, or fails to perform the agreement at paragraph (g)(1)(i)(C) of this clause, and, in the absence of a properly executed novation or

change-of-name agreement, the CCR information that shows the Contractor to be other than the Contractor indicated in the contract will be considered to be incorrect information within the meaning of the "Suspension of Payment" paragraph of the electronic funds transfer (EFT) clause of this contract.

(2) The Contractor shall not change the name or address for EFT payments or manual payments, as appropriate, in the CCR record to reflect an assignee for the purpose of assignment of claims (see FAR Subpart 32.8, Assignment of Claims). Assignees shall be separately registered in the CCR database. Information provided to the Contractor's CCR record that indicates payments, including those made by EFT, to an ultimate recipient other than that Contractor will be considered to be incorrect information within the meaning of the "Suspension of payment" paragraph of the EFT clause of this contract.

(h) Offerors and Contractors may obtain information on registration and annual confirmation requirements via the internet at http://www.ccr.gov or by calling 1-888-227-2423, or 269-961-5757.

(End of clause)

Section 00800 - Special Contract Requirements

DBA INSURANCE

DBA SUPPLEMENTAL INSURANCE*

DO NOT add a separate line item for the DBA Supplemental Insurance. DBA Supplemental Insurance **Must** be allocated based on the **Labor Cost** for each line item. Your Proposal may be considered **Non-Responsive** if you fail to comply with the directions above.

52.000-4105 WORKERS COMPSENSATION INSURANCE (DEFENSE BASE ACT) - CONSTRUCTION (NOV 2005)

(a) This clause supplements FAR Clause 52.228-3

(b) The contractor agrees to procure Defense Base Act (DBA) insurance pursuant to the terms of the contract between the U.S. Army Corps of Engineers (USACE) and CNA/Continental Insurance Company unless the contractor has a DBA self-insurance program approved by the Department of Labor. The contractor shall submit a copy of the Department of Labor's approval to the contracting officer upon contract award. The current rate under the USACE contract is $7.25 per $100 of compensation for construction.

(c) The contractor agrees to insert a clause substantially the same as the one in all subcontracts to which DBA is applicable. Subcontractors shall be required to insert a similar clause in any of their subcontracts subject to the DBA.

(d) Should the rates for DBA insurance coverage increase or decrease during the performance of this contract, USACE shall modify the contract accordingly. However, the revised rates will not be applicable until the Contractor's or Subcontractor's DBA Insurance policy is due to be renewed.

(e) Premiums will be reimbursed only if coverage is purchased through the USACE DBA Pilot Program administered by CNA Insurance and their Managing Broker, Rutherfoord International.

(End of clause)

52.000-4106 DEFENSE BASE ACT INSURANCE RATES – LIMITATION - FIXED-PRICE (APR 2007)

(a) The U.S. Army Corps of Engineers (USACE) has entered into a contract with CAN/Continental Insurance Company to provide all Defense Base Act (DBA) insurance to USACE contractors at a contracted rate. The rates for this insurance are as follows:

Services @ $3.50 per $100 of compensation; or

Construction @ $7.25 per $100 of compensation

(b) Bidders/Offerors should compute the total compensation (direct salary plus differential, but excluding per diem, housing allowance and other miscellaneous post allowances) to be paid to employees who will be covered by DBA insurance and the cost of DBA totals in the spaces provided for the base period and whatever extension there may be thereafter, if applicable.

(1) Compensation of Covered Employees: _____

(2) Defense Base Act Insurance Costs: _____

(3) Total Cost: _____

(c) Bidders/Offerors shall include a statement as to whether or not local nationals or third country nationals will be employed on the resultant contract.

(d) CNA Insurance is utilizing Rutherfoord International as their managing Broker. The primary POC is the USACE DBA Program Administrator is Ramoan Jones, (703)813-6571 ramoan.jones@rutherfoord.com. The alternate POC is Sara Payne, Senior Vice President, (703)813-6503 sara.payne@rutherfoord.com.

Your insurance should be applied to each line item as they pertain to labor cost for that line item. Do not add a separate line item for DBA insurance, if you do your bid may be considered as non-responsive.

- **CNA Insurance – Contractor – Insurance Carrier**
  - Roger Ellickson (312) 822-4395 Roger.ellickson@cna.com

The Continental Insurance Co.
Roger Ellickson
DBA CNA Insurance
333 S. Wabash Avenue
Chicago, IL 60685-1809

- **Rutherfoord International – Insurance Broker**
  - James Walczak (703) 813-6544 jim.walczak@rutherfoord.com

Rutherfoord International
James Walczak
5500 Cherokee Avenue, Suite 300
Alexandria, VA 22312

ECONOMIC SURVEILLANCE

Economic Surveillance Contract Language

Contractor shall report average pay rates and employment levels, for both domestic and international employees monthly. The information will be reported by labor category (as specified by USACE) and be specific to each work active work site. In addition the contractor shall report monthly non-labor contract spending for domestic and international contract expenses. This information will be reported by category (as specified by USACE) and will be specific to each active work site.

SECTION 01010

SPECIFICATION SECTION 01010
SCOPE OF WORK
(1 Story Police Security Building)
6 November 2007

1. GENERAL

1.1 PROJECT WORK SITES

This project consists of the design and construction of six (6) facilities for the Afghanistan National Police (ANP) Uniformed Police District Headquarters facilities to be located at various locations. The location(s) are located in the Badakhshan, Province of Afghanistan. This project is defined as the management, planning, designing; material, labor, and equipment, to site adapt and construct all utilities, vehicular access, buildings, force protection measures, site security, de-mining activities, and other features as referenced herein.

1.2 WORK TO BE PERFORMED

The work shall include site adapting the provided design documentation for the construction of the facilities described within the scope of work in accordance with the technical provisions (Section 01015) and provided drawings. The facilities shall include structures as indicated in the Scope of Work (Section 01010), technical provisions, and drawings and contain all necessary utilities for operation of such. All facilities shall be constructed in accordance with current building codes. Any standard that can be determined to be substantially equivalent to the standards specified in this document may be used, but it is the Contractor's responsibility to show the equivalency of the alternate standard and the Contracting Officer must approve its use. A partial listing of references is included within the Request for Proposal.

Work at individual projects sites consists of the construction of a District Headquarters compound in accordance with the contract documentation. The compound consists of a one-story Multi-Purpose Police Security facility (approx 27 m x 24 m) which includes a Dining Facility (DFAC), berthing areas and offices/conference areas, armory and jail cells. It also includes a complete perimeter wall, electrical system, plumbing/sewage system, and water delivery system, and Entry Control Points (primary and escape hatch). The contractor will insure that all seismic requirements are met in the construction of the facilities.

The contractor is encouraged to use Afghan labor and subcontractors to the maximum extent possible commensurate with technical, security or other requirements or necessary considerations. The intent of this contract is also to use locally procured materials and labor to the maximum extent possible.

Manufacturer's standard performance guarantees or warranties that extend beyond a 1 year period shall be provided.

1.3 TECHNICAL REQUIREMENTS

Work shall be executed in accordance with the Technical Requirements in Section 01015 and in the drawings. All requirements set forth in the Scope of Work (Section 01010), but not included in the Technical Requirements and/or drawings, shall be considered as set forth in both and vice versa. In case of question or ambiguity, the Contracting Officer (KO) shall make the final decision. The KO shall furnish the decision in writing if requested by the Contractor. Site adaptation of the provided designs shall be approved by the Contracting Officer's Representative (COR) prior to the start of work. The Contractor shall verify all dimensions provided in the scope of work prior to the start of any construction.

1.4 ENGLISH LANGUAGE REQUIREMENT
All information shall be presented in English. The Contractor shall have a minimum of one English-speaking representative on site at all times when work is in progress.

1.5 PERIOD OF PERFORMANCE
All work under this contract by the contractor shall be 420 calendar days after Notice to Proceed (NTP). Liquidated damages in the amount of $2,100.00 dollars (U.S.) shall be assessed for every calendar day beyond the scheduled contract completion date and charged to the Contractor.

Intermediate milestones and requirements for completion of construction at individual project sites are provided below. The Contractor shall deliver site-specific submittals and construction products according to the following schedule:

	Site Specific Submittals Due (calendar days after NTP)	Construction Completed (calendar days after approval of site specific submittals)
Priority 1 Sites (1 Sites)	20	385
Priority 2 Sites (1 Sites)	30	375
Priority 3 Sites (1 Sites)	40	365

This schedule allows for up to 15 days for the Contractor to achieve approval of site specific submittals.

It is the intent of these specifications to allow the Contractor to organize the construction program in the manner that the contractor believes will deliver the program most efficiently subject to the constraints described above. The Contractor shall assign priorities to the project sites, and provide the Government with a schedule of completion for them that conforms to the requirements of this paragraph within 10 days of notice to proceed.

It should be emphasized that the durations described above represent minimum requirements. The Contractor is encouraged to present alternate approaches that will deliver the construction program in less time.

Each site shall have a separate performance period and notice to proceed. Each ANP District Headquarters Compound shall be considered a single project for the purpose of scheduling and project submittals. Liquidated damages shall be applicable for work to be performed at each of the project sites described in Table - Construction Site Locations.

1.6 SUBMITTALS
Submittals and a Submittal Register are required as specified in Section 01335 of the Basic Contract.

1.7 CONSTRUCTION SITE LOCATIONS
Individual project site locations are provided below in Table - Construction Site Locations. Actual construction sites will be provided to the contractor after award of the contract and prior to notice to proceed. For the purpose

of bid preparation, the contractor shall assume that specific construction sites will be located within 1 kilometer of the specified district center.

1.8 SITE SECURITY

The Contractor shall provide perimeter force protection security for the developing site. Security may include but is not limited to fence and private security guards. Perimeter security shall prevent unauthorized site access and provide safety protection to the Contractor work force and government personnel for the duration of the project. The contractor is solely responsible for security however local police shall be coordinated with regarding security.

2. GENERAL REQUIREMENTS FOR POLICE PROGRAM FACILITIES

All standard construction amenities and details such as heating, lighting, site drainage, utility connections, etc. shall be implied as a construction requirement. Drawings referenced are provided as part of the contract documentation. Walkways are required to connect all buildings, facilities, and features such as parking lots, power plants, etc.

The Contractor shall site adapt and construct the facilities in accordance with the requirements stated in the Scope of Work (Section 01010), in the Technical Requirements (Section 01015), and in the provided drawings. The site adaptation and construction work shall include but not be limited to the efforts described in the following sub-paragraphs.

2.1 MASTER PLANNING, SITE SPECIFIC SURVEYS & SUBMITTALS

2.1.1 PROGRAMATIC DESIGN CHARRETTE

The contractor shall prepare a programmatic Master Site Plan that will be generally applied to all construction locations. The Master Site Plan shall include all locations of construction office/storage containers, laydown and construction debris removal area. The development of the master plan will include participation in a charrette that will be conducted at the Corps of Engineers Headquarters Office in Kabul. The charrette shall be scheduled by the Government to occur within ten (10) calendar days of notice to proceed. The programmatic Master Site Plan shall be submitted to the Government no later than twenty (20) days after Notice to Proceed. Site specific adaptations of the programmatic Master Site Plan shall be submitted to the Government according to the schedule provided above.

2.1.2 SITE SPECIFIC SURVEYS & SUBMITTALS

For each individual construction site, the Contractor shall perform a geotechnical investigation as defined in Section 01015, perform a topographic survey of the site; adapt the programmatic Master Site Plan to the conditions applicable for specific locations; prepare a complete grading and drainage plan with existing grades, proposed grades, and building finished floor elevations based on the technical requirements; prepare a landscaping plan; prepare a water supply, disinfection, and distribution layout plan; and prepare a wastewater collection, septic tank, and leach field layout plan. If there is a requirement for on-site demolition, the Contractor shall prepare and submit a demolition plan for that particular site. The Contractor shall not locate facilities in wadis or dry river beds. The finish floor elevation of all facilities and slabs shall be a minimum of 50 mm above flood elevations or river banks, whichever is at the highest elevation. The contractor shall provide drawings and details to describe any adaptations to the standard design that will be required for individual project sites as a site specific submittal as necessary. At a minimum, site specific submittals shall include: the geotechnical investigation report; drawings, details and calculations associated with well construction; drawings and details associated with demolition; drawings, and details associated with site grading; drawings, details, and calculations associated with well pump, disinfection system, booster pumps, hydropneumatic tank and distribution system construction; and drawings, details and calculations associated with sanitary sewer and leach field construction. The schedule for delivery of site-specific submittals is included above at paragraph 1.5, Period of Performance.

2.2 DE-MINING ACTIVITIES

The contractor shall search for, identify and clear all mines and unexploded ordnance (UXO) from the entire site. The contractor may only provide clearance/removal services via UN Mine Action Center (MAC) accredited entities, and clearance shall be accomplished to the anticipated foundation depth as

indicated in the contract. Clearance/removal may only be undertaken in accordance with International Mine Action Standards (IMAS). When mines and/or UXO's are identified, the Contractor shall place them in a location in accordance with IMAS. The work shall proceed in phases, concurrently with other construction efforts as determined by the contractor. Work will not commence until in any area that has not been cleared. The contractor shall provide the Government a clearance certificate approved by the MAC indicating that the site is clear of mines and UXO's and is available for construction operations to proceed.

It is the responsibility of the Contractor to be aware of the risk of encountering UXO/mines and to take all actions necessary to assure a safe work area to perform the requirements of this contract. The Contractor assumes the risk of any and all personal injury, property damage or other liability arising out of or resulting from any Contractor action taken hereunder. The Contractor and its subcontractors may not handle, work with, move, transport, render safe, or disarm any UXO/mine, unless they have appropriate accreditations from the UNMACA MAC.

If a UXO/mine is encountered after a MAC-approved clearance certificate is provided to the Government, UXO/mine disposal shall be handled in accordance with Section 01015, Technical Requirements.

2.3 DEMOLITION AND GRADING

As applicable, the contractor shall demolish all existing structures and buildings at the site prior to commencement of new work. The Contractor shall remove and dispose of all debris, concrete, and foundations. The Contractor shall verify the location of debris disposal with the Contracting Officer. The Contractor shall perform complete final site grading after installation of all required drainage structures per the Drainage Plan that shall be prepared as part of this project and after installation of any other buried utilities or other project components.

Native crushed stone 100 mm thick shall be placed around all buildings, from the building wall or building landscaping out 2,000 mm and all areas of anticipated foot or vehicle traffic to reduce erosion and to provide dust control. Compact existing earth surface to 95% density.

For the purpose of bid preparation, the contractor shall assume that specific construction sites will be located on flat ground requiring only routine clearing and grubbing prior to construction. If demolition of structures is required for a specific project site the Contractor's reimbursement for this work will be negotiated as required.

2.4 WATER SYSTEM

Construct a potable water supply system for the compound, to include all facilities, in accordance with the contract documentation. Construction shall include development of a ground well water source; provide water well pump(s), elevated water storage tank, and underground pipe distribution system. The water storage tank capacity shall be at least 3,000 gallons (1 day at a use of 50 gal per person per day). In addition to the main water supply system, provide a manually operated hand type pump for emergency water supply.

Domestic cold and hot water shall be provided in the Headquarters building to serve the water usage and plumbing fixtures provided for that facility. Water service shall enter the building in a mechanical, toilet, storage, or similar type space. All water piping shall be routed parallel to the building lines and concealed in all finished areas. Insulation and heat trace shall be provided where required to control sweating of pipes or to provide protection from freezing.

The Contractor shall install water distribution mains, branches, laterals, lines and service connections to include all pipe, valves, fittings and appurtenances. Exterior water line construction shall include service to all buildings. The required Average Daily Demand (ADD) is 50 gallons per capita per day (gpcd). Provide one outside water tap per building for landscaping purposes. All new water wells shall be located inside the compound. An emergency water supply manually operated hand type pump shall be provided. The site population is 60 personnel.

It is acknowledged that water may not be available at the site, despite the contractor's good faith efforts to drill. If the contractor claims no water is available, in order to fulfill the contract he must drill a minimum of two wells at the site to a minimum depth of 400 feet. If this is done, with no results, the contractor is still entitled to the full price of the contract. Additionally, the contractor must still furnish all plumbing and fixtures as described in the specifications. Dry wells must be de-commissioned in accordance with ASTM D 5299. The contractor must submit a written plan for approval for de-commissioning of wells.

2.5 SANITARY SEWER SYSTEM

Sanitary sewer collection and treatment system shall be constructed by contractor. Sewer collection system shall consist of gravity sewer pipe and appurtenances such as manholes, cleanouts and building service connections. The gravity sewer collection system shall connect to the sewage treatment and effluent disposal system. The Contractor shall construct the systems in accordance with criteria established in UFC 3-240-07FA, Sanitary and Industrial Wastewater Collection-Gravity Sewers and Appurtenances and UFC 3-240-02N Wastewater Treatment Systems Augmenting Handbook. The sewage collection and treatment system and effluent disposal shall be constructed to accommodate a facility population as specified in the Scope of Work. System capacity shall be calculated based on a hydraulic waste load that is equivalent to 80 percent of the Required Daily Demand for the water system as specified in these technical requirements, or as 33 gallons per capita per day (gpcd), whichever is greater. A geotechnical investigation of the proposed sewage treatment site is required and the contractor shall construct the sewage treatment system to be compatible with site and soil conditions. Sewage treatment system shall be a traditional septic tank absorption field effluent disposal system. Construction requirements and criteria for septic tank & subsurface absorption field and mound systems shall be in accordance with guidelines outlined in TM 5-814-3/AFM 88-11, Volume III Domestic Wastewater Treatment and UFC 3-240-02N Wastewater Treatment Systems Augmenting Handbook. Minimum acceptable percolation rates are categorized as slow permeable 60 to 120 min/in (24-48 min/cm). The sewage treatment system shall be sited the maximum distance possible from the living quarters, working areas, public use areas and proposed facilities. The septic tank shall not be located under a building, road, or parking lot. Bollards shall be erected 1.2 meters on center around the septic tank to protect it from vehicle traffic. The sewage treatment system shall be accessible by road for maintenance. Construction of the sewage collection and treatment system must account for all current flows as well as anticipated flows. Storm water flow shall not be considered in the waste water treatment system. If a septic tank absorption field effluent disposal system is found to be unsuitable the Contractor shall notify the COR for guidance.

2.6 SITE POWER, ELECTRICAL, DISTRIBUTION SYSTEM, AND FUEL STORAGE

Contractor shall construct electrical systems as per the design for the facilities included in this Contract including all Guard Towers. Contractor shall refer to Section 01015 Paragraph 8 for the detail description and requirements of the Systems. Major Electrical Systems are, but not limited to: (a) On-Site Power Plant, (b) Site Secondary Power Distribution System, and (c) Interior Secondary Power Distribution System. A bulk fuel storage tank is required for a 30 day supply of fuel and shall be filled with fuel upon completion of the contract.

2.6.1 On-Site Power Plant: Power Plant shall consist of one (1) 80 KW (100 KVA) generator to provide service to the Headquarters Compound. Generator shall be provided inside "weather-proof" (IP54 or better) enclosure. Generator pad shall be constructed with a reinforced concrete floor slab. A covered shelter shall be provided. The shelter shall be pole mounted and shall provide coverage for the generator and switchboard pads.

2.6.2 Site Secondary Power Distribution System: Site Secondary Power Distribution System shall include installation of underground cables in direct buried Schedule 40 PVC conduit from the Power Plant to the individual facilities.

2.6.3 Interior Secondary Power Distribution System: Interior Secondary Power Distribution System, rated at 380/220 volts, 3 phase, 4 wire and 50 Hz. with wiring installed in embedded or surface mounted conduits, shall be provided in all facilities, including guard towers and guard shacks.

2.7 FORCE PROTECTION MEASURES

The Contractor shall construct force protection measures as detailed in the drawings which include perimeter walls, gates, vehicle barriers, guard shacks and guard towers. Construct perimeter walls as indicated on the site

plan from masonry or native stone when available, as shown on the drawings. Install outriggers and single-strand concertina wire on top of the wall. The walls shall measure at least 2.4 m high with a thickness of the walls not less than 600 mm. Guard towers shall be constructed at all four site corners at an offset to allow visual observation along the outside face of the wall. Outrigger supporting arms shall be "Y" shaped with post securely embedded into the top of the wall. Posts shall conform to the IBC standard for Pipe, Steel, Hot Dipped Zinc Coated (Galvanized) Welded.

The Entry Control Point (ECP) will include a manually operated swing steel gate for vehicles and a separate steel swing gate for personnel. The ECP will also include two guard shacks. Design vehicle for ECP entrance is a fuel delivery/septic tank truck typical for region of project site.

The Escape Hatch will include a manually operated, steel, swing gate.

The gates shall be swing type. Hinged gates shall be a pair of 3.65 m wide x 2.4 m high leafs, constructed of steel plates, steel tube frame, and steel tube intermediate posts and rails at the ECP and a single gate, 3.65 m wide x 2.4 m high and similarly constructed at the Escape Hatch. Where site constraints prohibit vehicular sized swing gate at the Escape Hatch provide personnel sized steel swing gate.

The design of the gates shall insure that it is dimensionally stable, square, true and planar. Gate leafs shall not rack or deflect when install on its hinges. Gates shall have a sufficient number of hinges, anchor mounted to the exterior masonry walls, to support each gate leaf. Provide a locking mechanism that holds the gates together when in the closed position as well as a drop bolt that engages a steel sleeve embedded in the pavement.

Guard Shacks - Construct one guard shack, located outside the compound at the stand-off ECP location of 3.1 meters. Construct a second guard shack inside the perimeter wall adjacent to the personnel gate. Guard shacks shall be 11 SM buildings consisting of reinforced concrete frames, foundations, floor slabs, and roof slabs, with brick masonry infill walls, 200mm thick. Floor finish shall be sealed concrete. Each building shall have three (3) horizontal sliding windows, one (1) exterior door, and a metal sloping roof. Glazing for the windows shall be minimum 8mm thick plexiglass.

Guard Towers – The contractor shall construct four (4) guard towers in accordance with the contract documentation. The following criterion applies to the guard tower construction:

(a) The Contractor shall construct guard towers at each inside corner of the force protection walls as indicated in the contract documents. Guard tower shall be a minimum of 3 m x 3 m in size. The guard tower shall be constructed of reinforced concrete frame with brick masonry infill walls, a wood floor hatch access door, and awning type windows as indicated. Glazing for the windows shall be minimum 8mm thick plexiglass. Windows shall be located on all 4 sides to provide a 360 degree viewing area. The tower shall be supported on reinforced concrete footings located below the frost line or a minimum of 800mm below grade, whichever is greater.

(b) Access ladders shall be constructed per OSHA Standards, with entry to the tower through a wooden floor hatch door.

(c) Guard towers shall be provided with general lighting and shall be fitted with one 360-degree omni-directional searchlight. Two weather-resistant duplex receptacles shall be provided as required for general use. The area in the immediate exterior vicinity of the guard tower shall be provided with an all weather non-slip surface and shall be graded to sufficiently drain away from structure.

(d) Illuminate the exterior of the compound. Position lights to provide overlapping coverage and to avoid illuminating guard positions. Do not use white lights inside guard towers. Use red, blue, or black lamps in interior guard tower lighting. Guard towers shall be provided with general lighting and shall be fitted with one 360-degree omni-directional, ballistic resistant searchlight.

2.8 PARKING, ROADS, & WALKWAYS

The Contractor shall design and construct the entire road and parking network. The roads shall be designed to carry traffic of a 3 ton two-axle vehicle. A storm drainage system shall also be included. The road layout shall provide access to entry control points, parking lots, vehicle maintenance facilities, fuel points, generator yard, sewage septic tank, and the trash collection point. Provide parking area for vehicles inside the compound. Road design shall be designed per Section 01015, Technical Requirements. Roadways and sidewalks are required as shown on attached drawings and shall be designed and constructed based upon recommendations from geotechnical analysis as required herein.

The Contractor shall design and provide landscaping for the compound. Design and provide a network of concrete sidewalks to connect the buildings. Provide outdoor benches, lighting, and gathering areas.

2.9 TRASH POINT

The Contractor shall place, in a location convenient for easy removal, a trash collection point. It shall be located outside the compound walls. The trash point shall be a 1.8 m x 1.8 m concrete pad with a 1.8 m tall wooden fence about the perimeter. One side shall have a 1.2 m wide gate entrance.

2.10 DISTRICT HEADQUARTERS BUILDING (ONE-STORY BUILDING)

The contractor shall site adapt and construct the Police Security Building in accordance with the scope of work, technical specifications, and drawings. The District Headquarters Building shall be a 593.7 SM one story building consisting of a reinforced concrete frame, foundation, floor slab, and roof slab, with brick masonry infill walls. Truss supported metal roof shall be provided over concrete roof slab.

This facility will contain the following functions: berthing of personnel; kitchen/dining; latrines to include sinks, toilets, showers; security area to include holding cells, latrines, weapons storage, and guard room; and administrative space (offices). An outside wood stove kitchen shall be provided. The following criteria and guidance is provided:

(a) Foundation work and floor - Construct the foundation in accordance with the contract documentation. Foundation excavation shall extend a sufficient distance from walls and footings to allow for placing and removal of forms. The Contractor shall direct surface water away from the excavation to prevent erosion and undermining the foundation by constructing diversion ditches, dikes, or other site grading.

(b) Exterior and interior wall construction, interior columns, and roof - Construct the exterior and interior walls, interior columns, and roof in accordance with the contract documentation.

(c) Security Area (Multi-purpose Police Security Area) - The Contractor shall construct a multi-purpose police security facility which includes a dining facility, berthing areas, admin. spaces, weapons room, and holding cells in accordance with the contract documentation.

(d) Holding cells - Construct holding cells in accordance with all contract documents. The Contractor shall construct a walkway in the southern area of the two jail cells and allow personnel access from the guard room to the jail cells. The holding cells will not have windows and each holding cell shall have reinforced concrete walls. Each holding cell will have a 11-13 gauge steel door with a dead-bolt lock. The door shall have a pass-through slot for passing of food trays with a hinged cover lockable from the outside. Built into the bottom of the door shall be a 300 mm wide by 500 mm tall door for passing a bucket in and out with a hinged cover lockable from the outside. Install a 2400 mm long bench securely bolted to the floor with a wall mounted steel bar. Contractor will construct an Afghan toilet (eastern style) oriented in the correct cultural direction with a screen about 1300 mm high in front of the toilet. Per design, separate gender holding cells will be constructed.

(e) Armory (Weapons Storage) - The armory will not have windows and shall have reinforced concrete walls with a 11-13 gauge steel door with a dead-bolt lock. Roof slab shall consist of 200 mm thick concrete slab reinforced with double layers of rebars.

(f) Guard room – Construct a guard room in accordance with the contract documents, with access capabilities from the guard room to the jail cells as shown.

(g) Dining Area and Kitchen – The Contractor shall design and construct a kitchen and dining area in accordance with the contract documents. The complete and functional dining and kitchen facility shall be capable of feeding up to 30 personnel at one sitting based on the menu and functional requirements of the ANP and the local availability of food service equipment and supplies. The contractor shall provide 14 gauge, type 304, (18-8) minimum stainless steel work counters, shelving, scullery sink, stoves, electrical capacity, outlets, and space for future refrigerators and freezers (not in contract) within the DFAC. Equipment shall be durable, easy to operate, maintain, clean, and be locally available. All work counters and scullery shall have an 800 mm deep work surface at 900 mm above the floor and supported by pairs of stainless steel legs (front and back of counters) at 1800 mm maximum centers. Provide integral stainless steel backsplashes at each side adjoining a wall (trim as required at the pass-thru opening). Work counters shall be continuous and fixed to the walls or 800 x 1800 minimum units. See floor plan for proposed kitchen layout. Design must be submitted and approved by the contracting officer prior to purchasing or installing any equipment or furnishings. Fuel for cooking is discussed in paragraph 2.8.o below. Trench type floor drains shall be installed in the kitchen areas. Install a large wash basin with a low rim height designed for washing very large pots. Fire protection is to be provided by fire extinguishers at easily accessible locations.

(h) Berthing rooms - The Contractor shall construct multiple berthing rooms for males based on the total population of 60 personnel. Sufficient berthing areas shall be constructed as open bay rooms in accordance with the contract documentation. Ceiling fans shall be installed for ventilation.

(i) Toilet and shower facilities - Construct toilets, sinks, ablution, and wash areas in accordance with the contract documents. Electric cabinet or unit type heaters suitable for a wet environment shall be utilized to provide heat in the facility. Electric hot water heaters shall be installed to provide hot water to the showers and sinks. Shower stalls shall be large enough to allow room to dress and undress between an outer and inner shower curtain. Stalls shall have a shower curtain on the outside. Showers shall contain a mixing valve for hot and cold water mixing. There shall be a fixed shower head nozzle attached directly to the pipe. All eastern style toilets shall be provided with wall-mounted faucets. Urinals are not required. All sinks shall be trough type constructed of block and concrete with ceramic tile exterior and lining capable of withstanding abuse. The building shall be constructed with exhaust fans to ventilate steam to the outside environment and, where required, insulated piping to prevent freezing of water pipes in winter. All water supply plumbing shall be exposed and metallic.

(j) Window and door installation - Caulk all joints between masonry and window and door frames to prevent the passage of wind and water. Material should be silicon applied with a caulking gun to a dry, clean surface.

(k) Wall and ceiling finishes - Complete the wall and ceiling finishing/painting in accordance with the contract documentation. For facilities besides the Multi-Purpose Police Security Facility, brick or CMU surfaces, are to receive a minimum 1cm plaster coat. The contractor shall paint the interior walls and trim, and the interior ceiling of the building. The surfaces include the interior wall space, the trim, windows, doors, and other interior items. The Engineer shall select colors. All the walls will be painted with water-based paint and building exteriors shall be painted with acrylic based paint. Water-based trim paint will be used for all surfaces such as doors, window frames, etc. Contractor will paint according to the following schedule:

PAINT SCHEDULE:

All Surfaces	Water Based Primer	1 Coat
Interior Walls	Water Based Paint	2 Coats
Interior Ceilings	Water Based Paint	2 Coats

All brick or other porous masonry surfaces shall receive a filler coat prior to finish coats. All surfaces shall be free of dust, dry, and clean prior to painting. Rooms shall be swept and cleaned before painting begins. The time between coats shall conform to the time recommended by the manufacturer. In latrine and shower rooms (if required), use waterproof paint. Contractor will clean up all paint drips, splatters, and spills on surfaces such that no paint stain remains.

(l) Electrical – Provide and install new electrical devices including light fixtures, light bulbs, light switches, receptacles, distribution panels, conductors, junction boxes, conduit and other items as shown schematically on the electrical drawings. The contractor is responsible to wire all facilities. The contractor shall construct and install according to the lighting plan, the ac lighting, and power distribution board.

(m) Fuel source for cooking – Propane stoves shall be provided for indoor cooking and wood burning stoves shall be provided in an exterior covered cooking area. A 14 day supply of propane and wood shall be provided for cooking upon completion of the contract.

(o) Fire extinguishers shall be installed where indicated in the contract documentation.

(p) Concrete stoops shall be provided at all exterior doors or as indicated on the contract documents.

(q) Plumbing

- Unless noted elsewhere, the following typical plumbing fixtures shall be provided:

- Eastern Water Closet with flush tank assembly. Enameled cast iron, recessed floor mounted. Provide a cold water spigot 300 mm above finished floor on the right (from a perspective of standing inside of the cubicle and looking out) sidewall of the cubicle. P-trap drain should be a one-piece system without removable parts.

- Lavatories. Multiple wall mounted faucets mounted over a CMU block basin, finished with ceramic tile, and sloped to a single drain. P-trap drain should be a one-piece system without removable parts.

- Shower. Provide valves for manual mixing with hot and cold water. In addition to a showerhead, provide each shower stall with a threaded faucet approximately 1200 mm AFF with hot and cold-water controls, mixing valve and a diverter type valve so water can be directed to either the shower or to the lower faucet.

- Kitchen Sinks. Single Bowl size as indicated on plans, corrosion resisting formed steel. Faucet bodies and spout shall be cast or wrought copper alloy. Handles, drain assembly, and stopper shall be corrosion resisting steel or copper alloy.

- Grease Interceptor. Steel construction, manual cleaning type with removable checker plate cover, complete with flow control valve

- Shower Drain. Cast iron construction with galvanized body, integral seepage pan, and adjustable perforated or slotted chromium plated bronze, nickel-bronze, or nickel brass strainer consisting of a grate and threaded collar. P-trap drain should be a one-piece system without removable parts.

- Trench Drain. Cast iron construction with galvanized body, integral seepage pan, and adjustable perforated or slotted chromium plated bronze, nickel-bronze, or nickel brass strainer consisting of a grate and threaded collar. This style of drain shall be employed in the kitchen area of the DFAC in response to kitchen cleaning practices of the local national staff. Also, access needs to be provided to the solids collector for routine emptying. P-trap drain should be a one-piece system without removable parts.

- Room hose bibs and floor drains shall be provided as required. Kitchen hose bibs to be supplied with connecting hose on reel including approximately 1.2 m of hose. Provide clean-up spray nozzle with hose assembly.

- Floor drains shall be provided in each room that contains a water source. Floor drains shall be provided in the mechanical equipment and toilet rooms as required. Drains shall be located near toilet partitions in toilet rooms. In mechanical rooms, floor drains shall be provided to avoid running drain piping long distances above or over the floor. Toilet room floor drains are similar except are provided with built-in, solid, hinged grate. A trench drain shall be provided for the Kitchen. All waste and vent piping shall be provided in accordance with the latest edition of IPC. Drain outlet shall use p-trap system to trap sewer gases. P-trap drain should be a one-piece system without removable parts.

(r) Clotheslines shall be installed behind the building, approximately 5 m in length with 4 lines across spaced 410 mm apart and of sufficient strength to prevent sagging when all of the lines are loaded.

3. SUBMITTAL SCHEDULE

Note: The contractor shall provide separate submittal sets for each of the construction sites described in this contract.

Description	Required by Specification Section:	Due by:
Charrette	01010, 2.1.1	Scheduled by Government within 10 days of NTP
Schedule of Project Site Completions	01010, 1.5	10 days after NTP
Programmatic Master Site Plan	01010, 2.1.1	20 days after NTP
Site Specific Submittals	01010, 1.5	Per schedule provided in Paragraph 1.5
Conference minutes	01335, 3.7.1	Within 7 days of each conference
Contractor information	01312, 1.6.1.1	Within 14 days of receipt of QCS software from the Government
Subcontractor administrative data	01312, 1.6.1.2	Within 14 days of receipt of QCS software from the Government
Initial project schedule submission	01321, 3.3.1	Within 10 days of notice to proceed
Updated project schedule	01321, 3.4.1	Within 4 days of Bi-weekly progress meeting
Form 4288 identifying items requiring formal submittal	01335, 3.2.2	Within 14 days of notice to proceed
Quality Control Plan	01451A, 3.2	Within 14 days of notice to proceed
Daily CQC report	01451A, 3.9	Daily
Quality control plan coordination meeting	01451A, 3.3	Before construction start
Accident Prevention Plan	01525, 1.8	7 days prior to date of preconstruction conference
Activity Hazard Analysis	01525, 1.9	7 days before start of each construction phase
As-Built Documents		Upon Completion

Construction Site Locations
Uniformed Police District Headquarters

Site Location	Province
Arghanjwa	Badakhshan
Baharak	Badakhshan
Shar-i-Buzurg	Badakhshan
Shuhada	Badakhshan
Tashkam	Badakhshan
Yaftel	Badakhshan

-- End of Section --

SECTION 01015

SECTION 01015

TECHNICAL REQUIREMENTS

1. GENERAL

The Contractor's site adaptation of the design and construction must comply with technical requirements contained herein. All requirements set forth in Section 01010 (Scope of Work) but not included in the Technical Requirements, shall be considered as set forth in both, and vice versa. The Contractor shall provide design and construction using the best blend of cost, construction efficiency, system durability, ease of maintenance and environmental compatibility.

These design and product requirements are minimum requirements. The Contractor is encouraged to propose alternate design or products (equipment and material) that are more commonly used in the region; will be equally or more cost effective or allow for more timely completion, but furnish the same system durability, ease of maintenance and environmental compatibility. The Contractor will be required to submit information as requested by the Contracting Officer to make a comparison of the proposed alternate. All variations must be approved by the Contracting Officer.

1.1 ASBESTOS CONTAINING MATERIALS

Asbestos containing material (ACM) shall not be used in the design and construction of this project. If no other material is available which will perform the required function or where the use of other material would be cost prohibitive, a waiver for the use of asbestos containing materials must be obtained from the Contracting Officer.

1.2 SAFETY

1.2.1 Unexploded Ordnance (UXO).
It is the responsibility of the Contractor to be aware of the risk of encountering UXO/mines and to take all actions necessary to assure a safe work area to perform the requirements of this contract. If during construction, the contractor becomes aware of or encounters UXO/mines or potential UXO/mines, the contractor shall immediately notify the COR, mitigate any delays to scheduled or unscheduled contract work, and clear/remove the UXO/mines. The contractor may only provide clearance/removal services via UN MAC accredited entities. Clearance/removal may only be undertaken in accordance with IMAS. The Contractor assumes the risk of any and all personal injury, property damage or other liability arising out of or resulting from any Contractor action taken hereunder.

Scrap metal shall be the property of the Host Government. The scrap metal on site shall be moved to an area away from the site perimeter as directed by the Contracting Officer's Representative and left for the Host Government to remove and/or salvage.

NOTE: For previous UXO/mine information, the following points of contact from the UN Mine Action Center of Afghanistan are provided:

Mohammad Sediq, Chief of Operations,
Email: sediq@unmaca.org
Cell: +93 070 295207

Hansie Heymans, Chief Information Officer,
Email: hansie@unmaca.org
Cell: +93 070 294286

1.2.2 Unexploded Ordnance (UXO) Safety Support During Construction. It is the responsibility of the Contractor to be aware of the risk of encountering UXO and to take all actions necessary to assure a safe work area to perform the requirements of this contract. If after the entire site has been cleared of UXO/mines per the International Mine Action Standards (IMAS) and clearance is done to the anticipated foundation depth, the Contractor becomes aware of or encounters UXO or potential UXO during construction, the Contractor shall immediately stop work at the site of the encounter, move to a safe location, notify the COR, and mitigate any delays to scheduled or unscheduled contract work. The Contractor shall remove and dispose of UXO's per the International Mine Action Standards (IMAS). These standards can be found at http://www.mineactionstandards.org. The Contractor assumes the risk of any and all personal injury, property damage or other liability, arising out of and resulting from any Contractor action hereunder. In these cases the contractor shall be required to identify and dispose of the ordnance.

1.2.3 Explosives Safety. General safety considerations applicable to personnel, both essential and non-essential, at project sites where UXO may be encountered include:

(a) Do not carry fire or spark-producing devices.
(b) Do not conduct explosive or explosive-related operations without approved procedures and proper supervision and UXO safety support.
(c) Do not become careless by reason of familiarity with UXO or the reported probability level of UXO contamination.
(d) Do not conduct explosive or potentially explosive operations during inclement weather.
(e) Avoid contact with UXO except during UXO clearance operations.
(f) Conduct UXO-related operations during daylight hours only.
(g) Employ the "buddy system" at all times.

1.2.4 Activity Hazard Analysis (AHA) Briefings.
(a) Activity Hazard Analysis's shall be prepared in accordance with the Corps of Engineers

Safety and Health Requirements Manual, EM 385-1-1.

(b) Hazard analyses will be prepared and briefed by personnel that are knowledgeable in UXO and explosives safety standards and requirements. These personnel should understand the specific operational requirement and hazard analysis methodologies. A hazard analysis will be performed for each activity to determine the significance of any potential explosive-related hazards. Explosive residues may be discovered or exposed during UXO operations in the form of powder or various granular and powder based pellets. These contaminants can enter the body through the skin or by ingestion if proper personal hygiene practices are not followed. Explosive fillers such as white phosphorus are dangerously reactive in air and acute exposure can result in serious injury to the skin, eyes, and mucous membranes. They are also a fire hazard.

1.2.5 Safety requirements (or alternatives) that will either eliminate the identified hazards, mitigate or control them to reduce the associated risks to an acceptable level will be developed. The adequacy of the operational and support procedures that will be implemented to eliminate, control, or abate identified hazards or risks will then be evaluated and a second risk assessment completed to verify that a satisfactory safety level has been achieved.

1.2.6 The Contracting Officer will notify the Contractor of any detected noncompliance with the foregoing requirements. The Contractor shall take immediate corrective action after receipt of such notice. Such notice, when delivered to the Contractor at the work site, shall be deemed sufficient for the purpose of notification. If the Contractor fails or refuses to comply promptly, the Contracting Officer may issue an order stopping all or part of the work until satisfactory corrective action has been taken. The Contractor shall make no part of the time lost due to such stop orders the subject of claim for extension of time or for excess costs or damages.

1.3 LIMITATION OF WORKING SPACE

The Contractor shall, except where required for service connections or other special reasons, confine his operations strictly within the boundaries of the site. Workmen will not be permitted to trespass on adjoining property. Any operations or use of space outside the boundaries of the site shall be by arrangement with all interested parties. It must be emphasized that the Contractor must take all practical steps to prevent his workmen from entering adjoining property and in the event of trespass occurring the Contractor will be held entirely responsible.

Areas located immediately outside the construction area are known to contain mines and unexploded ordnance (UXO). Contractors assume all risks when venturing in or out of the designated work area.

1.4 TEMPORARY STRUCTURES

The Contractor shall erect suitable temporary fences, lighting, and necessary structures to safeguard the site, materials and plant against damage or theft and for the protection of the general public and shall adequately maintain the same throughout the course of the contract.

1.5 SUBCONTRACTORS

Compliance with the provisions of this section by subcontractors will be the responsibility of the contractor.

1.6 LIST OF CODES AND TECHNICAL CRITERIA

The following codes and technical criteria and those referenced therein shall be required for this project. References within each reference below shall be required and adhered to. This list is not exhaustive and is not necessarily complete.

- American Water Works Association, ANSI/AWWA C651-99 standard
- Army TM 5-853-1, Security Engineering, vols. 1 through 4, 12 May 1994
- ASCE 7-02, Minimum Design Loads for Buildings and Other Structures, 2002
- ASTM - American Society for Testing and Materials
- AWS - American Welding Society
- EIA ANSI/TIA/EIA-607: (1994) Commercial Building Grounding/Bonding Requirement Standard
- Factory Mutual (FM) Approval Guide-Fire Protection (2002)
- IBC - International Building Code (and its referenced codes including those inset below)
- IPC – International Plumbing Code
- Lighting Handbook, IESNA, latest edition
- Codes and Standards of the National Fire Protection Association (NFPA)
  [As applicable and enacted in 2003, unless otherwise noted]
- NFPA 10, Portable Fire Extinguishers, 2002 edition
- NFPA 80, Standard for Fire Doors and Other Opening Protectives, 2007 Edition
- NFPA 70, National Electrical Code, 2005 edition
- NFPA 101, Life Safety Code, 2006 Edition
- International Mine Action Standards, latest edition; see http://www.mineactionstandards.org for copy of standards
- UFC 1-200-01, Design: General Building Requirements, 31 July 2002
- UFC 3-240-03, Operation and Maintenance: Wastewater Treatment System Augmenting Handbook
- UFC 3-230-17FA Drainage in Areas Other than Airfields
- UFC 3-230-19N Water Supply Systems
- UFC 3-240-04A Wastewater Collection
- UFC 3-240-07FA Sanitary and Industrial Wastewater Collection
- Underwriters' Laboratories (UL) Fire Protection Equipment Directory (2002)
- UFC 3-280-01A Ground Water

The Contractor shall maximize the separation distances to the extent possible for force protection given the size and shape constraints of the site. Use the following codes and criteria as guides:

- UFC 4-022-01 Security Engineering – Entry Control Facilities – Access Control Points
- UFC 4-010-01 DoD Minimum AT-FP Standards for Buildings

The publications to be taken into consideration shall be those of the most recent editions. Standards other than those mentioned above may be accepted if the standards chosen are internationally recognized and meet the minimum requirements of the specified standards. The Contractor shall be prepared to submit proof of this if requested by the Contracting Officer.

2. SITE DEVELOPMENT

The project includes furnishing all materials, equipment and labor for constructing water, sanitary sewer and storm sewer systems, as applicable. Work also includes, but is not limited to, geotechnical and topographic surveys, site clearing and grading, demolition, installation of roads and sidewalks, perimeter wall and gates, entry control points, and other facilities as described in Section 01010.

2.1 GEOTECHNICAL, FOUNDATIONS, AND SURVEY

2.1.1 General. The foundations shall be constructed using reinforced concrete materials as shown on the drawings and stated in the specifications. A bearing capacity of 0.75 kg/sq. cm was assumed and used in designing the building foundations; see foundation plans and paragraph 4, STRUCTURAL. The contractor is responsible for performing a geotechnical investigation to determine if the assumed bearing capacity and foundations as shown and designed will perform satisfactory. The maximum allowable settlement between footings shall be less than 25 mm. If the contractor determines, after completing his geotechnical investigation, that the foundations as designed will not perform satisfactory,

the contractor shall redesign the foundations accordingly. The contractor is responsible for the design and construction of the foundations.

2.1.2 Geotechnical Investigation*.* The contractor shall perform a site specific geotechnical investigation to verify the foundations, pavements, material, earthwork and any other geotechnically related items shown on the contract drawings and specifications will perform satisfactory. The contractor shall determine all necessary geotechnical conditions by appropriate field and laboratory testing and analyses.

2.1.3 Geotechnical Qualifications*.* A geotechnical engineer or geotechnical firm responsible to the contractor shall develop all geotechnical engineering design parameters. The geotechnical engineer or geotechnical firm shall be qualified by: education in geotechnical engineering; professional registration; and a minimum of ten (10) years of experience in geotechnical engineering design.

2.1.4 Design Certification. The contractor shall certify in writing that the design of the project has been developed consistent with the site-specific geotechnical conditions. The certification shall be stamped by the geotechnical engineer of the geotechnical firm and shall be submitted with the final design.

2.1.5 Survey and Mapping

2.1.5.1 General Work to be performed - Conduct topographic survey, mapping and documentation of the project site to include surface physical features, buildings, existing utilities, hydrological, geological, botanical or other physical conditions that could impact design. Topographic survey data shall include horizontal and vertical (H&V) controls. The limits of the survey shall be 10 m outside of the anticipated construction area and 15 m wide along utility lines to be replaced.

2.1.5.2 For Horizontal and Vertical Control, the surveyor shall use established monuments, if available. If monuments have been destroyed or do not exist, the mapping shall be based on WGS84 geodetic system and converted to UTM coordinates. All site plans and master plans shall be drawn in the following projection and datum for incorporation into the U.S. Army Corps of Engineers GIS system: WGS 1984 UTM Zone 42 N. The horizontal and vertical control established on site shall be a closed loop with third order accuracy and procedures.

2.1.5.3 All of the existing control points used at the site shall be plotted at the appropriate coordinate point and shall be identified by name or number, and adjusted elevations.

2.2 ENVIRONMENTAL PROTECTION

2.2.1 Applicable Regulations. The Contractor shall comply with all Afghan laws, rules, regulations or standards concerning environmental pollution control and abatement with regard to discharge of liquid waste into natural streams or manmade channels. The contractor shall review local environmental regulations with the contracting officer prior to design and discharge of any liquid wastes into natural streams or manmade channels.

2.2.2 Notification. The Contracting Officer will notify the Contractor in writing of any observed non-compliance with the foregoing provisions. The Contractor shall immediately take corrective action. If the Contractor fails or refuses to promptly take corrective action, the Contracting Officer may issue an order stopping all or part of the work until satisfactory corrective action has been taken. No extension of time or damages will be awarded to the Contractor unless it was later determined that the Contractor was in compliance.

2.2.3 Spillages. Measures shall be taken to prevent chemicals, fuels, oils, greases, bituminous materials, waste washings, herbicides and insecticides, and construction materials from polluting the construction site and surrounding area.

2.2.4 Disposal. Disposal of any materials, wastes, effluents, trash, garbage, oil, grease, chemicals, etc., shall be taken to a dumpsite off site and subject to the approval of the Contracting Officer. Burning at the project site for the disposal of refuse and debris will not be permitted.

2.3 CIVIL SITE DEVELOPMENT

2.3.1 Site Plan. The contractor shall locate the facilities in general agreement with the drawings included and any requirements in these technical specifications. All buildings, roads, parking areas, entry control points, guard towers, fence, utility structures, and other site features shall be clearly defined and dimensioned on the site plan. Buildings shall be located to provide access for emergency vehicles and fire fighting. Roads and parking areas shall be designed for turning radius of the largest vehicle entering the compound.

2.3.2 Demolition. Demolition shall include removal of all structures, foundations, pavements, and utilities, and clearing and grubbing. All refuse and debris shall be disposed of off site. Holes and depressions shall be backfilled. Fill materials shall be composed of satisfactory soils or aggregates defined in ASTM D 2487 as GW, GP, GM, SP, SM, SW, CL-ML. Minimum soil compaction shall be 95 percent of maximum density as defined in ASTM D 1557.

2.3.3 Grading and Drainage. The contractor will provide all necessary site grading to insure adequate drainage so that no buildings or pavements will be flooded due to a rainfall of a 10-year frequency. Drainage of the area should be compatible with the existing terrain. Building floor elevations shall be a minimum 150 mm above finish grade. Finished grades shall slope away from the building on all sides at a minimum of 2%. Notify the COR in the event of fuel spillage to site.

2.3.4 Paving.

2.3.4.1 *Roads.* Contractor shall construct roads and parking areas using aggregate surface. Subgrade shall be a minimum of 150 mm (6 inches) minimum in depth scarified and compacted to 95% proctor density. Aggregate surfacing shall be a minimum of 150 mm (6 inches). If geotechnical report indicates that thicker pavement sections are required then the Contractor shall adjust thicknesses accordingly. Aggregate surfacing material must be well graded, durable aggregate uniformly moistened and mechanically stabilized by compaction. Degree of compaction shall be expressed as a percentage of the maximum density obtained by the test procedure presented in ASTM D 1557or equivalent DIN, BS, or EN standards.

2.3.4.2 *Bridges and Site Grading Plan.* The Contractor shall notify the Contracting Officer immediately if initial site survey determines that area hydrology requires major drainage structures or bridges. The contractor shall design a site grading plan that provides positive drainage and minimizes the requirement for major structures in a cost effective manner. Drainage shall be designed for a 10 year storm frequency.

2.3.4.3 *Sidewalks.* Sidewalks shall be provided to connect parking areas with buildings and adjoining buildings where foot traffic is anticipated. Sidewalks shall be constructed with aggregate surfacing. Aggregate surfacing shall be 100 mm (4 inches). Aggregate surfacing material must be well graded, durable aggregate uniformly moistened and mechanically stabilized by compaction.

2.3.5 Masonry/Stone Compound Walls/Chain Link Fencing.

2.3.5.1 *Exterior Compound Wall.* Construct perimeter walls where indicated on the site plan from masonry or native stone when available, as shown on drawing details. Install outriggers and single-strand concertina wire on top of the wall. The walls shall measure at least 2.4 m high with a thickness of the walls not less than 600 mm.

2.3.5.2 *Gates.* The gates shall be swing type. Vehicle gates shall be a pair of 3.65 m wide x 2.4 m high leafs, constructed of a steel tube frame and steel tube intermediate posts and rails. Design and construct Force Protection entry gates of heavy steel frame, with minimum 2.5 mm

steel skin and matching personnel gates with view port. Gates shall swing from one meter square reinforced concrete columns covered with stone to match fence. Provide reinforced grade beam across gateway flush with pavement to lock gates with flush mounted vertical sliding bolts, bolts shall be 50 mm dia solid steel. The design of the gates shall insure that it is dimensionally stable, square, true and planar. Gate leafs shall not rack or deflect when installed on its hinges. Gates shall have a sufficient number of hinges to support each gate leaf. Provide a locking mechanism that holds the gates together when in the closed position as well as a drop bolt that engages a steel sleeve embedded in the pavement.

2.3.5.3 *Reinforced Barbed Tape.* Reinforced barbed tape shall be 600 mm diameter concertina style coil consisting of 31 loops. Each loop shall consist of 19 barb clusters per loop. Adjacent coils loops shall be alternately clipped together at three points about the circumference to produce the concertina effect upon deployment. Spacing between attachments points when deployed shall be 400 mm. The reinforced barbed tape shall be fabricated from 430 series stainless steel with hardness range of Rockwell (30N) 37-45 conforming to the requirements of ASTM A 176. Each barb shall be a minimum of 30.5 mm (1.2 inch) in length, in groups of 4, spaced on 102 mm (4 inch) centers. The stainless steel core wire shall have a 2.5 mm (0.098 inch) diameter with a minimum tensile strength of 895 MPa. Sixteen gauge stainless steel twistable wire ties shall be used for attaching the barbed tape to the barbed wire. The reinforced barbed tape shall be equivalent to NSN: 5660-01-457-9852.

2.3.5.4 *Outriggers.* Outrigger supporting arms shall be “Y” shaped with post securely embedded into the top of the wall. Posts shall conform to ASTM F 1083, Pipe, Steel, Hot Dipped Zinc Coated (Galvanized) Welded.

2.3.5.5 *Chain Link Fencing.* Construct chain link fencing around the Water Tower and Well House as indicated on the site plan. Fencing shall be 2.4 m high. Construct a 2.4 m high by 6 m swinging hinged gate for access.

Fence and gate fabric shall be No. 9 gage wires woven into a 50 mm diamond mesh. Fabric shall be coated with 366 grams per square meter zinc galvanizing. Posts shall be ASTM F 1083 Pipe, Steel, Hot Dipped Zinc Coated (Galvanized) Welded or equal. The fence and gate shall be topped with barbed wire and outriggers.

The gate shall be constructed of a steel tube frame and steel tube intermediate posts and rails. The design of the gates shall insure that it is dimensionally stable, square, true and planar. Gate leafs shall not rack or deflect when installed on its hinges. Gates shall have a sufficient number of hinges to support each gate leaf. Provide a locking mechanism that holds the gates together when in the closed position as well as a drop bolt that engages a steel sleeve embedded in the pavement.

2.3.5.6 *Vehicle Barriers.*
(1) *Passive Barriers.* Barriers shall be Jersey Barriers or equivalent mobile concrete barrier system approved by the contracting officer and as shown on the drawings.

2.3.6 Civil Utilities

2.3.6.1 *General.* The design of the water and sanitary systems shall be sized to provide flow and discharge based on a fixture unit basis. The design drawings shall show all utility lines, line sizes, valves, manholes, disinfection systems, and applicable details associated with water and sanitary system designs. Specifications covering water lines, valves, pumps, controls, sanitary sewers and storm sewers shall be submitted as part of the design and shall require standard materials that are available in-country. Contractor shall install and connect exterior sanitary sewer collection and water supply piping to service connection points of each facility.

2.3.6.2 *Water Supply*. The contractor shall construct water well(s) inside the compound, to provide sufficient supply for the facility. If unavailable within the compound, Contractor shall

notify the COR for resolution. Off site water wells then may become a possibility. Unless noted elsewhere, wells shall be capable of supplying one day demand with 16 hours of pumping time. Well construction shall be in accordance with AWWA A100 Water Wells. Well shall be drilled or augured to a minimum depth of 20 m below the existing water table.

Casing - In unconsolidated material, casing shall be extended to the top of the well screen. In rock formations (drilled wells) the hole may be left open with casing extended 3 m into the rock formation. All wells will be cased 500 mm above grade (i.e., base of pit, ground surface, etc.) and be fitted with a lockable cap with air gap (vacuum relief during pumping). Each section of casing will be joined with standard couplings and full-threaded joints, or by proper welding, so that all joints are sound and watertight. Well casing alignment shall not interfere with the proper installation and operation of the pump. The bottom of the casing will be fitted with a metal or PVC well screen that will permit maximum transmission of water without clogging. The minimum length of screen shall be at least 3 m. Casing size shall be 100 mm to 200 mm in inside diameter as needed for well pump provided. Casing material shall be Schedule 40 steel, Schedule 40 PVC, or equivalent material.

Sealing - The drilling process will create a hole (borehole) larger than the casing. The entire space between the casing and the edge of the borehole will be filled with gravel, overburden, or concrete as follows:

a. The upper 3 m of the well bore will be sealed with cement grout. Grout shall be placed in one continuous mass and be impermeable.

b. The space around the well screen will be filled with crushed stone or gravel (gravel pack). Average gravel particle size will be approximately 10 mm in diameter.

c. The space between the top of the gravel pack and the base of the grout seal may be backfilled with overburden or other clean earth material.

Disinfection - Disinfection of the well shall be in accordance with AWWA A100-06. At a minimum the source will be developed until all suspended material associated with drilling have been removed.

Source protection - Surface drainage within 30 m of wellhead shall ensure no ponding, flooding or collection of runoff adjacent to the well. This can be accomplished through surface grading or use of gravel drains to modify site drainage in the vicinity of the well. Contractor shall identify all sources of contamination and ensure the proposed well site meets minimum standoff distances as indicated below:

Sewage storage areas (outhouses, tanks, individual sewage pits) – 30 m
Septic fields (infiltration galleries) – 30 m
Animal pens and yards – 60 m
Fuel storage, engine maintenance/repair – 30 m

Crushed stone for well sealing - Shall consist of crushed stone containing angular shapes and surfaces with no rounded surfaces with the following gradation:

Sieve Size	% Total Wt. Passing
12.5 mm	100
4.75 mm	75 +/- 13
1.18 mm	25 +/- 15
75 um	8 +/- 4

All aggregate shall contain less than 5% of shale, clay lumps, coal, lignite, soft or unfragmented stone, or other deleterious materials.

Cement Grout for well sealing - Mixture shall consist of one part Portland cement to 4 parts washed sand. Water shall be mixed to produce a flowable consistency in order to fill all cracks and voids around the well casing.

Concrete - Mixture shall consist of seven sacks per cubic meter. Each sack is 49 kg of Portland cement. The mix ratio shall be 1:2:4 (Portland cement: sand: crushed angular aggregate (12.5 mm max)).

Quality control and testing

a. Pump Testing: In order to ensure that the source is capable of providing the required demand capacity, the completed well shall be tested for yield and drawdown by pumping at a minimum sustained rate of 20 liters/minute for four hours duration. The well must maintain a minimum head under sustained pumping conditions of ¼ the depth of the well. (for example, for a 40 m deep well, head should be maintained at 10 m from the bottom of the well).

b. Water quality testing: Water will be provided from the source that is acceptable for the intended use. Sources that do not meet the requirements of the intended use will be deemed unacceptable and another source must be established at no additional cost. Water quality testing (i.e., bacteria, chemical, turbidity, etc.) will be conducted in accordance with AWWA A100-06.

c. Well house: At new wells, construct a permanent well house. The floor of the well house shall slope away from the casing approximately 10 mm per 1 m (1/8" per foot). Floor of well house shall be above floodplain. The well house design should be such that the well pump, motor and drop pipe could be removed readily. The well house shall protect valves and pumping equipment plus provide freeze protection for the pump discharge piping beyond the check valve. The well house shall be insulated. The well house shall have door locks and hatch lock on roof for drop pipe removal.

The well is to be drilled at a location recommended in writing by the contractor. The water source should be located at the highest elevation possible within the adjacent area. The well house shall have a 2.4 m high chain link security fence with gate surrounding it. The fence and gate shall be topped with barbed wire and outriggers.

d. The site population is 60 personnel.

Well Pump – A submersible, centrifugal pump shall be installed inside the casing set no more than 1.5 meters from the base of the excavation. Control of the pump shall be by means of a Hand-Off-Auto (HOA) switch. In the "Auto" position, the pump shall be started and stopped automatically by water levels in the water storage tank. Pump shall start at low level and shall stop at high level. Level controls shall be adjustable. Manual start shall be the Hand position.

2.3.6.3 *Water Storage*. Tank capacity shall be at least 3,000 gallons (1 day at a use of 50 gal per person per day). The tank shall be adjacent to the well house and shall be elevated to a height of 15 meters. Tank shall be welded and coated carbon steel in accordance with AWWA D100-05 and AWWA D102-06; or bolted steel in accordance with AWWA D103-97; or lined cast-in-place concrete. Tank connections shall include; 50 mm (2") minimum inlet; 50 mm (2") minimum outlet; drain; overflow; air vent; and access opening. Inlet and outlet shall be located on opposite sides of tank. Provide necessary openings as required to accommodate level controls for well pump operation. Overflow and air vents shall be screened to prevent bird, insect, and rodent entry.

The cast-in-place concrete tank, if provided, shall be lined with sheet material. Material shall be chlorosulfonated polyethylene 1.14 mm thick with a plus or minus 0.100 mm, thickness

tolerance. The liners shall be Hypalon product, or approved equal, NSF 54 and NSF 61 approved for potable water storage. White material is required so that any mechanical damage to the liner can be easily found when the tank is empty. Potable grade chlorosulfonated polyethylene reinforced liner shall be compounded from the first quality material and specifically can be used in hydraulic structures. Only virgin materials shall be used with no regrind or reprocessed materials added. The liner compound shall be specifically designed for liner applications. The liner shall be constructed from two plies of sheeting laminated together over one ply of 10 x 10 - 1000 denier polyester fabric. Liner resin shall comprise greater than 45% by weight of the total sheeting formulation. Fabric shall be fully encapsulated by same material at roll edges. Exposed fabric will not be accepted. The finished lining shall be a sunlight and weather resistance membrane that is flexible, durable, watertight and free from pinholes, blisters and contaminants. The liner shall not impart any impurity to the water so as to render it non-potable for human consumption.

2.3.6.3 *Water Distribution – Water Tower – Gravity Feed*. The Contractor shall design and construct a new water tower with water tank as indicated above, in accordance with the structural load requirements indicated in paragraph 4.

Contractor shall install water distribution mains, branches, laterals, lines and service connections to include all pipe, valves, fittings and appurtenances. Exterior water line construction shall include service to all buildings as described in the Scope of Work. Adequate cover must be provided for frost protection. The required Average Daily Demand (ADD) is 50 gallons per capita per day (gpcd). Provide one outside water tap per building for landscaping purposes.

Contractor shall provide pipe of adequate strength, durability and be corrosion resistant with no adverse effect on water quality. The exterior surface of the pipe must be corrosion resistant. If the pipe is installed underground pipe shall be encased with polyethylene in accordance with AWWA C105. Water distribution pipe material shall be PVC or Ductile Iron (DI). Ductile iron pipe shall conform to AWWA C104, et al. DI fittings shall be suitable for 690kPa (75 psi) pressure unless otherwise specified. Fittings for mechanical joint pipe shall conform to AWWA C110. Fittings for use with push-on joint pipe shall conform to AWWA C110 and C111. Fittings and specials shall be cement mortar lined (standard thickness) in accordance with C104. Polyvinyl Chloride (PVC) pipe shall conform to ASTM D 1785. Plastic pipe coupling and fittings shall be manufactured of material conforming to ASTM D 1784, Class 12454B. PVC screw joint shall be in accordance with ASTM D 1785. PVC pipe couplings and fittings shall be manufactured of material conforming to ASTM D 1784, Class 12454B. Pipe less than 80 mm (3 inch), screw joint, shall conform to dimensional requirements of ASTM D schedule 80. Elastomeric gasket-joint, shall conform to dimensional requirements of ASTM D 1785 Schedule 40. All pipe and joints shall be capable of 690kPa (75 psi) working pressure.

2.3.6.5.1 *Hand Pump.* The contractor shall provide a manually operated hand pump for emergency water supply. Location shall be outside fence line securing well house as indicated.

2.3.6.6. *Hydrostatic, Leakage and Disinfection Tests*. The Contracting Officer will be notified not less than 48 hours in advance of any water piping test and will be given full access for monitoring testing procedures and results. Where any section of water line is provided with concrete thrust blocking for fittings or hydrants tests shall not be made until at least 5 days after installation of the concrete thrust blocking, unless otherwise approved.

2.3.6.6.1 *Pressure Test*. After the pipe is laid, the joints completed, and the trench partially backfilled leaving the joints exposed for examination, the newly laid piping or any valve section of piping shall, unless otherwise specified, be subjected for 1 hour to a hydrostatic pressure test of 690 kPa (75 psi). Each valve shall be opened and closed several times during the test. Exposed pipe, joints, fittings, hydrants and valves shall be carefully examined during the

partially opened trench test. Joints showing visible leakage shall be replaced or remade as necessary. Cracked or defective pipe, joints, fittings, hydrants and valves discovered following this pressure test shall be removed and replaced and retested until the test results are satisfactory.

2.3.6.6.2 *Leakage Test*. Leakage test shall be conducted after the pressure tests have been satisfactorily completed. The duration of each leakage test shall be at least 2 hours and during the test the water line shall be subjected to not less than 690 kPa (75 psi). Leakage is defined as the quantity of water to be supplied into the newly laid pipe, or any valve or approved section, necessary to maintain pressure to within 34.5 kPa (5 psi) of the specified leakage test pressure after the pipe has been filled with water and the air expelled. Pipe installation will not be accepted if leakage exceeds the allowable leakage, which is determined by the following formula:
L = 0.0001351ND (P raised to 0.5 power) L = Allowable leakage in gallons per hour N = Number of joints in the length of pipeline tested D = Nominal diameter of the pipe in inches P = Average test pressure during the leakage test, in psi gauge

Should any test of pipe disclose leakage greater than that calculated by the above formula, the defective joints shall be located and repaired until the leakage is within the specified allowance, without additional cost to the government.

2.3.6.6.3 *Disinfection Procedure*. Before acceptance of potable water operation, each unit of completed waterline shall be disinfected as prescribed by AWWA C651. After pressure tests have been completed, the unit to be disinfected shall be thoroughly flushed with water until all entrained dirt and mud have been removed before introducing the chlorinating material. Flushing will be performed in a manner and sequence that will prevent recontamination of pipe that has previously been disinfected. The chlorinating material shall be liquid chlorine, calcium hypochlorite, or sodium hypochlorite. The chlorinating material shall provide a dosage of not less than 50 ppm and shall be introduced into the water lines in an approved manner. Polyvinyl Chloride (PVC) pipelines shall be chlorinated using only the above-specified chlorinating material in solution. The agent shall not be introduced into the line in a dry solid state. The treated water shall be retained in the pipe long enough to destroy all non-spore forming bacteria. Except where a shorter period is approved, the retention time shall be at least 24 hours and shall produce not less than 25 ppm of free chlorine residual throughout the line at the end of the retention period. Valves on the lines being disinfected shall be opened and closed several times during the contact period. The line shall then be flushed with clean water until the residual chlorine is reduced to less than 1.0 ppm. During the flushing period, each fire hydrant on the line shall be opened and closed several times.

2.3.6.6.4 *Sampling*. For each building connected to the water system, personnel from the Contractor's commercial laboratory shall take at least 3 water samples from different points, approved by the Contracting Officer, in proper sterilized containers and perform a bacterial examination in accordance with approved methods. The commercial laboratory shall be verified to be qualified by the appropriate authority for examination of potable water.

2.3.6.6.5 *Acceptance Requirements*. The disinfection shall be repeated until tests indicate the absence of pollution for at least two full days. The unit will not be accepted until satisfactory bacteriological results have been obtained.

2.3.6.6.6 *Time for Making Tests*. Except for joint material setting or where concrete thrust blocks necessitate a 5-day delay, pipeline jointed with rubber gaskets, mechanical or push-on joints, or couplings may be subjected to hydrostatic pressure, inspected and tested for leakage at any time after partial completion of backfill.

2.3.6.6.7 *Concurrent Tests*. The Contractor may elect to conduct the hydrostatic tests using either or both of the following procedures. Regardless of the sequence of tests employed, the

results of pressure tests, leakage tests, and disinfection shall be recorded for submission and approval. Replacement, repair or retesting required shall be accomplished by the Contractor at no additional cost to the Government.

a. Pressure test and leakage test may be conducted concurrently,

b. Hydrostatic tests and disinfection may be conducted concurrently, using water treated for disinfection to accomplish the hydrostatic tests. If water is lost when treated for disinfection and air is admitted to the unit being tested, or if any repair procedure results in contamination of the unit, disinfection shall be re-accomplished.

2.3.6.7 *Sanitary Sewer*

a. Construct a sanitary sewer system in accordance with the contract documentation, providing service from all buildings requiring sewage collection.. Leach pits and septic tanks are specified in the contract documentation. Leach pits and septic tanks are to be located inside the perimeter compound (see site plan). If leach field is found to be unsuitable, the Contractor shall notify the COR. Septic tank capacity shall be a minimum of 3,000 gallons. Leach pit shall be sized to accommodate the average daily flow of 3,000 gallons per day.

b. Exterior sanitary sewer line construction includes service to all buildings requiring sewage collection. Contractor shall construct the sanitary sewer collection system using finished floor elevations. Main collection sewers will follow the most feasible route to the point of discharge. The sewer collection system shall be constructed to accommodate the facility. Construction required shall include appurtenant structures and building sewers to points of connection with Building drains 1.5 m outside the building, to which the sewer collection system is to be connected.

c. The Contractor shall use the following criteria where possible to provide a layout which is practical, economical and meets hydraulic requirements:

- Follow slopes of natural topography.

- Avoid routing sewers through areas which require extensive restoration or underground demolition.

- Avoid areas of high groundwater and placement of sewer below the groundwater table.

- Locate manholes at change in direction, size or slope of gravity sewers.

- Use straight sections between manholes, curved alignment shall not be permitted.

- Avoid placing manholes where the tops will be submerged or subject to surface water inflow.

- Evaluate alternative sewer routes where applicable.

- Verify that final routing selected is the most cost effective alternative that meets service requirements.

d. Protection of water supplies - Unless noted elsewhere, the Contractor shall construct an appropriate size leach pit inside the district headquarter compound; ensure that the sewer design meets the following criteria:

- Sanitary sewers will be located no closer than 15 m horizontally to water wells or reservoirs to be used for potable water supply.

- Sanitary sewers will be no closer than 3 m horizontally to potable water lines; where the bottom of the water pipe will be at least 305 mm above the top of the sanitary sewer, horizontal spacing shall be a minimum of 1.8 m.

- Sanitary sewers crossing above potable water lines shall be constructed of suitable pressure pipe or fully encased in concrete for a distance of 3 m on each side of the crossing. Pressure pipe will be as required for force mains in accordance with local standards and shall have no joint closer than 3 m horizontally to the crossing, unless the joint is encased in concrete.

- Sanitary sewers shall be constructed to allow flow at 90 to 95 percent full. Sanitary sewer velocities shall be designed to provide a minimum velocity of 600 meters per second (mps) at the ADD flow rate and a minimum velocity of 0.8 to 1.05 mps at the peak diurnal flow rate. In no case shall the velocity drop below 0.3 mps, to prevent settlement of organic solids suspended in the wastewater. Pipe slopes shall be sufficient to provide the required minimum velocities and depths of cover on the pipe. Unless otherwise indicated. Gravity sewer pipe shall be installed in straight and true runs in between manholes with constant slope and direction. Adequate cover must be provided for frost protection. A minimum cover of 800 mm will be required to protect the sewer against freezing.

- The Contractor shall provide standard depth manholes (MH), that best meets the specific depth required, with an inside dimension of 1.2 m. Manholes shall be made of cast-in-place reinforced concrete with reinforced concrete cover. Minimum frame opening diameter shall be 600 mm. The manholes, frames and covers shall be traffic rated, H-20 load rating. All manholes shall be provided with a concrete bench with a flow line trough, smoothly formed to guide waste flow through the manhole. The top surface of the bench shall be above the crown of all pipes within the manhole. All surfaces of the bench shall be sloped smoothly toward the trough to guide flow.

1) Manholes are required at junctions of gravity sewers and at each change in pipe direction, size or slope, except as noted hereinafter for building connections.

2) Spacing. The distance between manholes must not exceed 120 m in sewers of less than 460 mm in diameter. For sewers 460 mm and larger, a spacing of up to 180 m is allowed provided the velocity is sufficient to prevent the settlement of solids.

2.3.6.8 *Storm Drainage System*

2.3.6.8.1 *Hydraulic Design*. New storm drain pipes, if required, shall be designed for gravity flow during the 10-year design storm unless otherwise approved by the Government. The hydraulic grade line shall be calculated for the storm drain system and all energy losses accounted for.

2.3.6.8.2 *Manholes*. Diameter of manholes shall be large enough to accommodate pipes entering/exiting the manhole. Manhole cast iron frames shall have a minimum opening diameter of 600 mm.

2.3.6.8.3 *Area Inlets*. Area inlets shall be properly sized and designed to accommodate the design flows.

2.3.6.8.4 *Head Walls and Flared End Sections*. Unless otherwise approved, head walls or flared end sections shall be provided at the ends of culverts and at storm drain outfalls. Protection from erosion and scouring at head wall and flared end section outfalls shall be provided as needed.

2.3.6.8.5 *Culverts*. Culvert pipes shall have a minimum diameter of 450 mm wherever possible.

2.3.6.8.6 *Storm Drain and Culvert Pipe*. The Contractor shall select the appropriate storm drain and culvert pipe materials from local sources. Pipe, bedding, and backfill shall be of adequate strength (or stiffness) to support the earth, live, and construction loads imposed on the pipe. If using an open channel earth ditch such as a trapezoidal or V-ditch, apply slope protection and erosion control measures on the surface of the ditch.

2.3.7 Trash Point. The Contractor shall place, in a location convenient for easy removal, a trash collection point. It shall be located outside the compound walls. The trash point shall be a 1.8 m x 1.8 m concrete pad with a 1.8 m tall wooden fence about the perimeter. One side shall have a 1.2 m wide gate entrance.

3. ARCHITECTURAL

3.1 GENERAL

All material approved shall become standardized material to be used throughout the facilities under contract. Different sub-contractors shall not use different material or standards under the contract. Intent of the project is to use locally procured materials (unless specified otherwise) and labor to the maximum extent possible while satisfying seismic building code. Conflicts between criteria and local standards shall be brought to the attention of the Contracting Officer for resolution. In such instances, the Contractor shall furnish all available information with justification to the Contracting Officer.

3.2 DESIGN CRITERIA

The Codes, Standards, and Regulations listed below shall be used in the construction of this project. The publications shall be the most recent editions. Standards other than those mentioned may be accepted provided they meet the minimum requirements and the contractor shall submit proof of equivalency to the Contracting Officer for approval.

- IBC - International Building Code

3.3 EXCAVATION

Trench excavation shall be made for concrete footings. Trenches shall be a minimum of 800 mm deep. Trenches deeper than 1.5 m shall have protective shoring to protect workers or have the sides of the trench sloped back at a slope of 1.5:1. Care shall be taken when backfilling of foundation trenches to avoid damage to walls. Any excess dirt shall become the property of the Contractor and shall be removed from the site to a location approved by the Contracting Officer.

3.4 CONCRETE

Place 100 mm (4”) of capillary water barrier below areas to receive a concrete slab on properly compacted soil free of organic material. Concrete flooring in wet areas shall slope to the floor drain and not allow for water to puddle. Concrete slabs in all areas shall not be placed prior to inspection and approval of piping and sub-surface by the Contracting Officer. Foundation trenches shall be level and free of loose material. Trenches shall be inspected and approved by the Contracting Officer prior to placing of any concrete foundations. See paragraph 5 for structural characteristics of concrete and reinforcing steel for foundations and slabs.

3.5 MASONRY

Storage of masonry materials shall be in a dry place or materials shall be covered with a plastic protective layer. Cover open walls each day to keep them protected and dry. Brick masonry units shall be installed in running bond level and plumb. Mortar joints shall be 9 mm on all sides between bricks. Joints shall be struck with a concave tool to provide a smooth recessed curved surface. Install only quality units. The surface shall be free of chips, cracks, or other imperfections that would detract from

the overall appearance of the finished wall. Defective bricks or mortar shall be rejected. For other requirements, see paragraph 4 “Structural.”

3.6 METAL

3.6.1 Metal Window Sills. Aluminum window sills shall be installed on the exterior of all windows. The metal window sills shall have a turn down of 50 mm over the exterior masonry and stucco. Metal sills shall extend from side to side of the masonry opening in a single piece. Extend the metal window sill a minimum of 20 mm under the bottom of the aluminum windows. Install masonry mortar as required for a smooth surface under the window sills. Sills shall slope a minimum of 6 mm to the exterior and not allow water to puddle. Sealants shall be applied between joints of two (2) different materials.

3.6.2 Steel Cook Top. Provide steel cook top in kitchen minimum thickness of 10 mm. Provide circular cut outs. Consult with the Contracting Officer for the diameter of circular cutouts. Provide steel infill plates for all cut out openings. Cook top can be made of several pieces for ease of handling. Adjacent plates shall be tight fitting to each other.

3.6.3 Pass-Through Counter Top. Provide 1.6 mm (16 gauge) stainless steel, or 40 mm marble, pass through counter tops at openings between the kitchen and dining area. Edges shall be turned down 30 mm and corners shall be welded and ground smooth. Provide anchor angles welded to the bottom of the counters to anchor tops to masonry walls below. Provide eight (8) anchors on the Serving Counter, four (4) on each side of the wall. Anchor angles to wall with masonry expansion sleeves and stainless steel screws. Counter tops are to be 600 mm wide x length of opening shown.

3.6.4 Mirror Frames. Frames for plate glass mirrors larger than 450 by 750 mm shall be fabricated from extruded aluminum with anodized finish. Frames shall be provided with concealed fittings and tamperproof mountings.

3.6.5 Trench Covers and Frames. Trench covers shall be designed to meet the indicated load requirements. Trench frames and anchors shall be all welded steel construction designed to match cover. Covers shall have flush drop handles formed of 6 mm round stock, and shall be steel floor plate. Grating opening widths shall not exceed 25 mm. See drawings for locations.

3.6.6 Sunshades (Power Generators). Provide a 6m x 8m reinforced concrete pad and metal sunshade for power generator. See Site Plan for location. Proposed sizes shall be approved by Contracting Officer. Reinforced concrete pads shall have thickened slabs around the perimeters of the slabs Unless Noted Otherwise (UNO). Capillary water barriers shall be provided under the slabs. Sunshade shall have weather tight roofs. Sunshade framing members shall conform to ASTM A 653A/A 653M and ASTM A 36/A 36M. Sheet metal for roofing shall conform to ASTM A 153/A 153M, ASTM A 653A/A 653M and ASTM A 1008/A 1008M. Design calculations for the sunshade structures and fabrication drawings shall be submitted for approval. General sizing, placement, and construction details have been provided for information only. Sunshades shall be designed to meet all snow, wind, wind uplift, seismic, and lateral loads for the site location. Roofing panels and fascia shall not be less than 24 gauge (0.70 mm) before coating. Roof finish shall be two (2) coats of baked enamel coating or silicone polyester coating consisting of an epoxy primer and a finish coat of silicone polyester or approved equal. Coating shall be applied to the outside of the panels. Inside shall be primed. Gutters and downspouts shall be either aluminum (0.81 mm thick minimum) or zinc coated (galvanized). Colors shall be from manufacturer’s standard color chart and approved by the Contracting Officer.

3.6.7 Wood Stove Kitchen Enclosure. Provide a steel frame, metal panel enclosure for a wood stove kitchen. Enclosure shall have metal wall panels on three sides and a metal roof, as illustrated in the contract documents, to form a weather tight enclosure on three sides. Foundation shall be 3.6m x 3.6 m reinforced concrete pad with thickened slab around the perimeter. Capillary water barriers shall be provided under the slab. Steel framing members shall conform to ASTM A 653A/A 653M and ASTM A 36/A 36M. Sheet metal for wall panels and roofing shall conform to ASTM A 153/A 153M, ASTM A 653A/A 653M and ASTM A 1008/A 1008M. Design calculations for the enclosure structure and

fabrication drawings shall be submitted for approval. General sizing, placement, and construction details have been provided for information only. Enclosure shall be designed to meet all snow, wind, wind uplift, seismic, and lateral loads for the site location. Roofing panels, wall panels, and fascia shall not be less than 24 gauge (0.70 mm) before coating. Exterior panel finish shall be two (2) coats of baked enamel coating or silicone polyester coating consisting of an epoxy primer and a finish coat of silicone polyester or approved equal. Inside shall be primed. Colors shall be from manufacturer's standard color chart and approved by the Contracting Officer. See 1 Story Building drawings for location.

3.7 CARPENTRY

3.7.1 Wood Trusses for Police Headquarters. See drawings for wood truss slopes, sizes, and locations. Truss and purlins system shall be designed to meet the local snow load, seismic, and wind uplift requirements.

Wood trusses shall be constructed of 50 mm x 100 mm wood members with support at 1 m o.c. each way for wood purlins or structural steel decking. Appropriate corrosion resistant fasteners shall be used for attaching members to each other and adjacent substrate.

Note: At the contractor's option, structural steel trusses may be designed and utilized in lieu of wood trusses. Submit shop drawings and calculations for approval.

3.7.2 Lumber. Mark each piece of framing and board lumber or each bundle of small pieces of lumber with the grade mark and the species. Distinguish structural, framing, and board lumbers.

3.7.3 Data Required. Submit calculations and drawings for all proposed structural members. Do not proceed with modifications until the submittal has been approved.

3.7.4 Natural Decay- and Insect-Resistant Wood. Natural decay-resistant and insect-resistant wood shall be used for all wood applications, unless noted otherwise.

3.7.5 Structural Lumber. Except where a specific grade is indicated or specified, any of the species and grades shall have allowable unit stresses in kPa per code requirements. Use for joists, rafters, headers, trusses, beams, columns, posts, stair stringers, girders, and all other members shall be stress rated. Design of members and fastenings shall conform to AITC OT-01.

3.7.6 Framing Lumber and Board Lumber. Framing lumber such as studs, plates, caps, collar beams, cant strips, bucks, sleepers, nailing strips, and nailers, and board lumber such as subflooring and wall and roof sheathing shall be the species and grades per WWPA G-5.

3.7.7 Hardware. Unless otherwise indicated or specified, rough hardware shall be of the type and size necessary for the project requirements. Sizes, types, and spacing of fastenings of manufactured building materials shall be as recommended by the product manufacturer unless otherwise indicated or specified. Hardware exposed to the weather or embedded in or in contact with preservative treated wood, exterior masonry, or concrete walls or slabs shall be zinc-coated.

(a) Bolts, Nuts, Studs, and Rivets

ANSI B18.2.1, ANSI B18.5.2.1M, ASME B18.5.2.2M, ASME B18.2.2, and ASTM A 687.

(b) Anchor Bolts

ASTM A 307, size as indicated, complete with nuts and washers.

(c) Lag Screws and Lag Bolts

ANSI B18.2.1.

(d) Nails

Nails shall be the size and type best suited for the purpose and shall conform to ASTM F 547. Nails shall be hot-dip galvanized or aluminum when used on exterior work.

3.7.8 Trim, Finish, and Frames. Provide species and grades listed for materials to be paint finished. Provide materials that are to be stain, natural, or transparent finished one grade higher than that listed. Provide species indicated for materials to be transparent finished.

3.8 ROOFING AND WEATHERPROOFING

3.8.1 Sloped Roofs. On sloping roofs provide and install .70 mm (24 gauge) galvanized steel standing seam design. Metal roofing shall be anchored to a structural metal deck or purlins on framed truss system as indicated in paragraph 3.7.1. See drawings for locations. Use fasteners at 300 mm on center, at all seams, and at 600 mm on center in the panel field. Fasteners shall be placed at the top of the metal roofing taking care not to dent panel. Roof sealant or adhesive shall be placed over each anchor head. Provide concealed fasteners at panel edges. Roofing system shall include all edge, ridge and penetration flashings necessary for a watertight installation. Roofing shall be galvanized mil finish. Panels shall be overlapped two corrugations side to side and be continuous sheets from ridge to eave. Provide continuous ridge vents at on all roof high points for ventilating attic space. Ridge vents shall be weather tight and prevent infiltration by insects. Eaves shall also be vented continuously or with 50 mm round or square vents at 600 mm max centers.

3.8.2 Sheet Metal.

3.8.2.1 *Materials.* Any metal listed by ASTM, DIN, BS or EN standards. Manual for a particular item may be used, unless otherwise specified or indicated. Materials shall conform to the requirements specified below and to the thicknesses and configurations established in ASTM, DIN, BS or EN standards. Different items need not be of the same metal, except that if copper is selected for any exposed item, all exposed items shall be copper.

3.8.2.2 *Steel Sheet, Zinc-Coated (Galvanized).* Zinc coated steel conforming to ASTM A 525, DIN BS or EN Standards.

3.8.2.3 *Gutters and Downspouts.* Gutters and downspouts shall be installed as indicated. Downspouts shall be rigidly attached to the building. Supports for downspouts shall be spaced according to manufacturer's recommendations. Downspouts shall be designed and fabricated on site. Unless otherwise specified or indicated, exposed edges shall be folded back to form a 13 mm (1/2 inch) hem on the concealed side, and bottom edges of exposed vertical surfaces shall be angled to form drips. Bituminous cement shall not be placed in contact with roofing membranes other than built-up roofing.

3.8.2.4 *Wall, Floor, and Ceiling Control Joints Over Plaster and Stucco.* Control joints shall be provided as specified in ASTM, DIN, BS or EN Standards.

3.8.2.5 *Connections and Jointing.*

(1) *Soldering.* Soldering shall apply to copper and stainless steel items. Edges of sheet metal shall be pre-tinned before soldering is begun. Soldering shall be done slowly with well heated soldering irons so as to thoroughly heat the seams and completely sweat the solder through the full width of the seam. Edges of stainless steel to be pre-tinned shall be treated with soldering acid flux. Soldering shall follow immediately after application of the flux. Upon completion of soldering, the acid flux residue shall be thoroughly cleaned from the sheet metal with a water solution of washing soda and rinsed with clean water.

(2) *Seaming.* Flat-lock and soldered-lap seams shall finish not less than 25 mm wide. Unsoldered plain-lap seams shall lap not less than 75 mm unless otherwise specified. Flat seams shall be made in the direction of the flow.

3.8.2.6 *Cleats.* A continuous cleat shall be provided where indicated or specified to secure loose edges of the sheet metalwork. Butt joints of cleats shall be spaced approximately 3 mm apart. The cleat shall be fastened to supporting wood construction with nails evenly spaced not over 300 mm. on centers. Where the fastening is to be made to concrete or masonry, screws shall be used and shall be driven in expansion shields set in concrete or masonry.

3.8.2.7 *Lintel Flashing.* Lintel flashing shall extend the full length of lintel. Flashing shall extend through the wall one masonry course above the lintels and shall be bent down over the vertical leg of the outer steel lintel angle not less than 50 mm, or shall be applied over top of masonry and pre-cast concrete lintels. Bed joints of lintels at joints shall be under laid with sheet metal bond breaker.

3.8.2.8 *Sill Flashing.* Sill flashing shall extend the full width of the sill and not less than 100 mm beyond ends of sill except at joint where the flashing shall be terminated at the end of the sill.

3.8.3 Sealants

3.8.3.1 *Interior Sealant.* ASTM C 834 or ASTM C 920, Type S or M, Grade NS, Class 12.5, Use NT, DIN, BS, or EN equal standards.

3.8.3.2 *Exterior Sealant.* For joints in vertical and horizontal surfaces, provide ASTM C 920, Type S or M, Grade NS, DIN, BS, or EN equal standards.

3.8.3.3 *Floor Joint Sealant.* (ASTM C 920) Type S or M, Grade P, class 25.

3.8.3.4 *Primers.* Provide a non-staining, quick-drying type and consistency recommended by the sealant manufacturer for the particular application.

3.8.3.5 *Bond Breakers.* Provide the type and consistency recommended by the sealant manufacturer to prevent adhesion of the sealant to backing or to bottom of the joint.

3.8.3.6 *Backstops.* Backing shall be 25 to 33 percent oversize for closed cell and 40 to 50 percent oversize for open cell material, unless otherwise indicated.

3.8.3.7 *Cleaning Solvents.* Provide type(s) recommended by the sealant manufacturer except for aluminum and bronze surfaces that will be in contact with sealant.

3.8.3.8 *Surface Preparation.* Surfaces shall be clean, dry to the touch, and free from dirt frost, moisture, grease, oil, wax, lacquer, paint, or other foreign matter that would tend to destroy or impair adhesion. Oil and grease shall be removed with solvent and surfaces shall be wiped dry with clean cloths. When resealing an existing joint, remove existing calk or sealant prior to applying new sealant. For surface types not listed below, the sealant manufacturer shall be contacted for specific recommendations.

3.8.3.9 *Masking Tape.* Masking tape shall be placed on the finish surface on one or both sides of a joint cavity to protect adjacent finish surfaces from primer or sealant smears. Masking tape shall be removed within 10 minutes after joint has been filled and tooled.

3.8.3.10 *Backstops.* Install backstops dry and free of tears or holes. Tightly pack the back or bottom of joint cavities with backstop material to provide a joint of the depth specified.

3.8.3.11 *Primer.* Immediately prior to application of the sealant, clean out loose particles from joints. Where recommended by sealant manufacturer, apply primer to joints in concrete masonry units, wood, and other porous surfaces in accordance with sealant manufacturer's instructions. Do not apply primer to exposed finish surfaces.

3.8.3.12 *Bond Breaker.* Provide bond breakers to the back or bottom of joint cavities, as recommended by the sealant manufacturer for each type of joint and sealant used, to prevent sealant from adhering to these surfaces. Carefully apply the bond breaker to avoid contamination of adjoining surfaces or breaking bond with surfaces other than those covered by the bond breaker.

3.8.3.13 *Sealants.* Provide a sealant compatible with the material(s) to which it is applied. Do not use a sealant that has exceeded shelf life or has jelled and can not be discharged in a continuous flow from the gun. Apply the sealant in accordance with the manufacturer's instructions with a gun having a nozzle that fits the joint width. Force sealant into joints to fill the joints solidly without air pockets. Tool sealant after application to ensure adhesion. Sealant shall be uniformly smooth and free of wrinkles. Upon completion of sealant application, roughen partially filled or unfilled joints; apply sealant, and tool smooth as specified. Sealer shall be applied over the sealant when and as specified by the sealant manufacturer.

3.8.3.14 *Protection:* Protect areas adjacent to joints from sealant smears. Masking tape may be used for this purpose if removed 5 to 10 minutes after the joint is filled.

3.8.3.15 *Final Cleaning:* Upon completion of sealant application, remove remaining smears and stains and leave the work in a clean and neat condition.

(1) Masonry and Other Porous Surfaces: Immediately scrape off fresh sealant that has been smeared on masonry and rub clean with a solvent as recommended by the sealant manufacturer. Allow excess sealant to cure for 24 hour then remove by wire brushing or sanding.

(2) Metal and Other Non-Porous Surfaces: Remove excess sealant with a solvent-moistened cloth.

3.9 WINDOWS, DOORS & GLAZING

3.9.1 Windows

3.9.1.1 *Materials.*

(1) Wood windows: Wood windows shall consist of complete units including sash, glazing, frame, weather-stripping, hardware, and insect screen as required. Window units shall meet the Grade 40 requirement of AAMA 101, including general hardware requirements.

(2) Fasteners: Provide aluminum, nonmagnetic stainless steel, epoxy adhesive, or other materials warranted by the manufacturer to be non-corrosive and compatible with wood window members, trim, hardware, anchors, and other components of window units.

(a) Exposed Fasteners: Except where unavoidable for application of hardware, do not use exposed fasteners. For application of hardware, use fasteners that match the finish of the member or hardware being fastened, as appropriate.

(3) Anchors, Clips, and Window Accessories: Fabricate anchors, clips, and window accessories of aluminum, nonmagnetic stainless steel, or hot-dip zinc-coated steel or iron complying with the requirements of DIN 1748; provide sufficient strength to withstand design pressure indicated. As a minimum provide 3 anchors on each side of the frame.

(4) Compression-Type Glazing Strips and Weather-stripping: Unless otherwise indicated, and at the manufacturer's option, provide compressible stripping for glazing and weather-stripping such as molded EPDM or neoprene gaskets.

(5) Sealant: For sealants required within fabricated window units, provide type recommended by the manufacturer for joint size and movement. Sealant shall remain permanently elastic non-shrinking, and non-migrating. Comply with Sealants of these specifications for selection and installation of sealants.

(6) Wire Fabric Insect Screen shall be permanently fixed to the exterior.

3.9.1.2 *Hardware.* Provide the manufacturer's standard hardware fabricated from aluminum, stainless steel, or other corrosion-resistant material compatible with wood and of sufficient strength to perform the function for which it is intended.

3.9.1.3 *Fixed, Casement, Awning and Sliding Windows.* Provide window units as shown on drawings.

3.9.1.4 *Fabrication.* Provide wood windows with paint finish in all buildings to fit the masonry openings. Window openings shall be provided with insect screening permanently fixed to the exterior. Provide a locking device on the interior of each window. Provide anchors on each side of the frame into the adjoining masonry, 3 on each side. Provide weather stripping system for all exterior windows and doors.

3.9.1.5 *Finishes.* Provide paint finish to match color scheme of adjacent buildings.

Color: Approval by Contracting Officer

3.9.1.6 *Inspection.* Inspect openings before beginning installation. Verify that rough or masonry opening is correct and the sill plate is level. Masonry surfaces shall be visibly dry and free of excess mortar, sand, and other construction debris.

3.9.1.7 *Installation.* Comply with manufacturer's specifications and recommendations for installation of window units, hardware, operators, and other components of the work. Set window units plumb, level, and true to line, without warp or rack of frames or sash. Provide proper support and anchor securely in place. Set sill members and other members in a bed of compound or with joint fillers or gaskets, as shown, to provide weather-tight construction. Refer to the Sealant sections for compounds, fillers, and gaskets to be installed concurrently with window units. Coordinate installation with wall flashings and other components of the work.

3.9.1.8 *Adjusting.* Adjust operating sash and hardware to provide a tight fit at contact points and at weather-stripping for smooth operation and a weather-tight closure.

3.9.1.9 *Cleaning.* Clean surfaces promptly after installation of windows. Exercise care to avoid damage to protective coatings and finishes. Remove excess glazing and sealant compounds, dirt, and other substances. Lubricate hardware and other moving parts.

3.9.2 Doors. Doors shall be solid core wood doors, except at prisoner rooms and weapons storage where heavy gauge steel doors should be provided in accordance with the contract drawings. Sizes shall be as shown on the drawings with frames to match door masonry openings. All doors and frames shall be painted U.N.O. All glazed doors shall have minimum 8mm plexiglass glazing in the upper half of the door as indicated in the contract documents. Commercial duty lock sets and hardware shall be used on all doors. Install required louvers, as called for in paragraph 6, in the lower portion of the door. Provide 3 hinges on all doors unless noted otherwise. Provide door handles and locksets that can be locked with a key on all doors. Coordinate the final keying schedule with Contracting Officer prior to ordering lock sets. Generally each building should have 8 master keys fitting all locks, 8 sub-master keys fitting all exterior doors and 3 keys each for each interior door. Include 25% spare key blanks for the amount of keys provided per building. Provide numbering system identifying key to associated room door. Provide weather stripping system for all exterior doors. Submit shop drawings together with lock sets for approval. Door hardware sets shall be provided as follows:

HW-1

1-1/2 pr	Hinges, A5111
1 ea	Lockset, F04 Entry Lock w/levers, Grade 1, Exit Devices
1 ea	Door Closer, C02061
1 ea	Marble Threshold
1 ea	Door Sweep

HW-2

3 pr	Hinges, A5111
2 ea	Exit Device, Conc Vert Rod, F04 w/Levers, Grade 1
2 ea	Door Closers, C02061
1 ea	Marble Threshold
1 ea	Door Sweep

HW-3

1-1/2 pr	Hinges, 8112
1 ea	Latch Set, F01 w/Levers, Grade 1
3 ea	Silencers

HW-4

1-1/2 pr	Hinges, A8112
1 ea	Lockset, F05
1 ea	Stop, L02101 or L02161
3 ea	Silencers

HW-5

1-1/2 pr	Hinges, 8112
1 ea	Lockset, F02
1 ea	Stop, L02101 or L02161
3 ea	Silencers
1 ea	Kick Plate, J102
1 ea	Mop Plate, J103
1 ea	Marble Threshold

HW-6

1-1/2 pr	Hinges, 8112
1 ea	Lockset, F07 Storeroom Lock
1 ea	Stop, L02101 or L02161
3 ea	Silencers

HW-7

1-1/2 pr	Hinges, A5111
1 ea	Passage Lockset
1 ea	Marble Threshold
1 ea	Door Sweep

HW-8

3 pr	Hinges, A8112
2 ea	Door Pull, J405
2 ea	Door Closer, C02051
2 ea	Door Stop, L02101 or L02161
2 ea	Silencers at framehood

HW-9

1-1/2 pr	Hinges, 5111
1 ea	Lockset, F05
1 ea	Stop, L02101 or L02161
3 ea	Silencers
1 ea	Kick Plate, J102
1 ea	Mop Plate, J103
1 ea	Marble Threshold

HW-10

1-1/2 pr	Hinges, A5111
1 ea	Passage Lockset
1 ea	Marble Threshold
1 ea	Door Sweep
1 ea	Door Closer, C02061

HW-11

2 pr	Hinges A8112
1 ea	Heavy Duty Dead Bolt Lock

3.9.2.1 *Steel Doors (Prison Rooms and Weapons Storage).* SDI A250.8, except as specified otherwise. Prepare doors to receive specified hardware. Doors shall be as indicated. Doors shall be constructed using heavy gauge steel. See drawings for steel door details for prison rooms.

(1) Welded Frames. Continuously weld frame faces at corner joints. Mechanically interlock or continuously weld stops and rabbets. Grind welds smooth.

(2) Stops and Beads. Form stops and beads from 0.9 mm thick steel. Provide for other openings in standard steel frames. Secure beads to frames with oval-head, countersunk Phillips self-tapping sheet metal screws or concealed clips and fasteners. Space fastener approximately 300 to 400 mm on centers. Miter molded shapes at corners. Butt or miter square or rectangular beads at corners.

(3) Anchors. Provide anchors to secure the frame to adjoining construction. Provide steel anchors, zinc-coated or painted with rust-inhibitive paint, anchors not lighter than 1.2 mm thick.

(a) Wall Anchors. Provide at least three anchors for each jamb. For frames which are more than 2285 mm in height, provide one additional anchor for each jamb for each additional 760 mm or fraction thereof.

* Masonry: Provide anchors of corrugated or perforated steel straps or 5 mm diameter steel wire, adjustable or T-shaped;

* Completed openings: Secure frames to previously placed concrete or masonry with expansion bolts

(b) Floor Anchors. Provide floor anchors drilled for 10 mm anchor bolts at bottom of each jamb member. Where floor fill occurs, terminate bottom of frames at the indicated finished floor levels and support by adjustable extension clips resting on and anchored to the structural slabs.

(4) Hardware Preparation. Provide minimum hardware reinforcing gages as specified in ANSI

A250.6. Drill and tap doors and frames to receive finish hardware. Prepare doors and frames for hardware in accordance with the applicable requirements of SDI A250.8 and ANSI A250.6. For additional requirements refer to BHMA A115. Drill and tap for surface-applied hardware at the project site. Build additional reinforcing for surface-applied hardware into the door. Locate hardware in accordance with the requirements of SDI A250.8, as applicable. Punch door frames, with the exception of frames that will have weather-stripping or lightproof or soundproof gasketing, to receive a minimum of two rubber or vinyl door silencers on lock side of single doors and one silencer for each leaf at heads of double doors. Set lock strikes out to provide clearance for silencers.

(5) Finishes. All surfaces of doors and frames shall be thoroughly cleaned, chemically treated and factory primed with a rust inhibiting coating as specified in SDI A250.8, or paintable A25 galvannealed steel without primer. Where coating is removed by welding, apply touchup of factory primer.

(6) Fabrication and Workmanship. Finished doors and frames shall be strong and rigid, neat in appearance, and free from defects, waves, scratches, cuts, dents, ridges, holes, warp, and buckle. Molded members shall be clean cut, straight, and true, with joints coped or mitered, well formed, and in true alignment. Dress exposed welded and soldered joints smooth. Design door frame sections for use with the wall construction indicated. Corner joints shall be well formed and in true alignment. Conceal fastenings where practicable. On wraparound frames for masonry partitions, provide a throat opening 3 mm larger than the actual masonry thickness. Design other frames in exposed masonry walls or partitions to allow sufficient space between the inside back of trim and masonry to receive calking compound.

(a) Grouted Frames. For frames to be installed and to be filled with mortar or grout, fill the stops with strips of rigid insulation to keep the grout out of the stops and to facilitate installation of stop-applied head and jamb seals.

(7) Installation.
(a) Frames. Set frames in accordance with SDI 105. Plumb, align, and brace securely until permanent anchors are set. Anchor bottoms of frames with expansion bolts or powder-actuated fasteners. Build in or secure wall anchors to adjoining construction. Backfill frames with mortar. When an additive is provided in the mortar, coat inside of frames with corrosion-inhibiting bituminous material.

(b) Doors. Hang doors in accordance with clearances specified in SDI A250.8. After erection and glazing, clean and adjust hardware.

(c) Protection and Cleaning. Protect doors and frames from damage. Repair damaged doors and frames prior to completion and acceptance of the project or replace with new, as directed. Wire brush rusted frames until rust is removed. Clean thoroughly. Apply an all-over coat of rust-inhibitive paint of the same type used for shop coat. Upon completion, clean exposed surfaces of doors and frames thoroughly. Remove mastic smears and other unsightly marks.

3.9.2.2 Wood Doors. Provide solid core wood doors in the sizes indicated in the contract drawings. Frames shall match new door masonry openings. All glazed doors shall have minimum 8mm plexiglass glazing.

3.9.2.2.1 Accessories

3.9.2.2.1.1 Door Louvers
Fabricate from wood and of sizes indicated. Louvers shall be of the manufacturer's standard design and shall transmit a minimum of 35 percent free air. Louvers shall be the slat type.

3.9.2.2.1.2 Door Light Openings

Provide glazed openings with the manufacturer's standard wood moldings except that moldings for doors to receive natural finish shall be of the same species and color as the face veneers. Moldings for flush doors shall be lip type.

3.9.2.2.1.3 Weather Stripping

Provide weather-stripping that is a standard cataloged product of a manufacturer regularly engaged in the manufacture of this specialized item. Weather stripping shall be looped neoprene or vinyl held in an extruded non-ferrous metal housing. Air leakage of weather stripped doors shall not exceed 0.003125 cubic meters per second of air per square meter of door area when tested in accordance with ASTM E 283

3.9.2.2.1.4 Pre-fitting

At the Contractor's option, doors may be provided factory pre-fit. Doors shall be sized and machined at the factory by the door manufacturer in accordance with the standards under which they are produced. The work shall include sizing, beveled edges, mortising, and drilling for hardware and providing necessary beaded openings for glass and louvers. Provide the door manufacturer with the necessary hardware samples, and frame and hardware schedules as required to coordinate the work.

3.9.2.2.1.5 Finishes

Provide door finish colors as selected by the Contracting Officer from the color selection samples.

3.9.2.2.1.6 Water-Resistant Sealer

Provide a water-resistant sealer compatible with the specified finish as approved and as recommended by the door manufacturer.

3.9.2.2.1.7 Installation

Before installation, seal top and bottom edges of doors with the approved water-resistant sealer. Seal cuts made on the job immediately after cutting using approved water-resistant sealer. Fit, trim, and hang doors with a 2 mm minimum, 3 mm maximum clearance at sides and top, and a 5 mm minimum, 6 mm maximum clearance over thresholds. Provide 10 mm minimum, 11 mm maximum clearance at bottom where no threshold occurs. Bevel edges of doors at the rate of 3 mm in 50 mm. Door warp shall not exceed 6 mm when measured in accordance with WDMA I.S. 1-A.

3.9.2.2.1.8 Weather stripping

Install doors in strict accordance with the manufacturer's printed instructions and details. Weather strip exterior swing-type doors at sills, heads and jambs to provide weather tight installation. Apply weather stripping at sills to bottom rails of doors and hold in place with a brass or bronze plate. Apply weather stripping to door frames at jambs and head. Shape weather stripping at sills to suit the threshold.

3.9.3 Glazing

ASTM C 1036, or ASTM C 1172 or equal. Acceptable manufacturer: Gürsan or equal

3.9.3.1 *Plastic Glazing (Plexiglass).* ASTM D 4802, Type II, heat resistant, clear and smooth on both sides, ultraviolet stabilized, scratch resistant, 6 mm thick.

3.9.3.2 *Glazing Accessories.*

(1) Sealant. Sealant shall be elastomeric conforming to ASTM, DIN, BS, or EN standards. Type S or M, Grade NS, Class 12.5, Use G. Color of sealant shall be as selected from manufacturer’s full range of standard colors by Contracting Officer.

(2) Glazing Gaskets. Glazing gaskets shall be extruded with continuous integral locking projection designed to engage into metal glass holding members to provide a watertight seal

during dynamic loading, building movements and thermal movements. Glazing gaskets for a single glazed opening shall be continuous one-piece units with factory-fabricated injection-molded corners free of flashing and burrs. Glazing gaskets shall be in lengths or units recommended by manufacturer to ensure against pull-back at corners.

(3) Fixed Glazing Gaskets. Fixed glazing gaskets shall be closed-cell (sponge) smooth extruded compression gaskets of cured elastomeric virgin neoprene compounds conforming to ASTM, DIN, BS. Or EN standarts.

(4) Wedge Glazing Gaskets. Wedge glazing gaskets shall be high-quality extrusions of cured elastomeric virgin neoprene compounds, ozone resistant, conforming to ASTM, DIN, BS, or EN standards.

(5) Putty and Glazing Compound. Glazing compound shall conform to ASTM, DIN, BS, or EN standards for face-glazing metal sash. Putty shall be linseed oil type conforming to DIN, BS, or EN standards for face-glazing primed wood sash. Putty and glazing compounds shall not be used with insulating glass or laminated glass.

(6) Setting and Edge Blocking. Neoprene setting blocks shall be dense extruded type conforming to ASTM, DIN, BS, or EN standards. Silicone setting blocks shall be required when blocks are in contact with silicone sealant. Profiles, lengths and locations shall be as required and recommended in writing by glass manufacturer.

3.9.3.3 *Preparation.* Openings and framing systems scheduled to receive glazing shall be examined for compliance with glazing manufacturer's recommendations including size, squareness, offsets at corners, presence and function of weep system, face and edge clearance requirements and effective sealing between joints of glass-framing members. Detrimental materials shall be removed from glazing rabbet and glass surfaced and wiped dry with solvent. Glazing surfaces shall be dry and free of frost.

3.9.3.4 *Installation.* Glazing work shall be performed in accordance with, glazing manufacturer's instructions and warranty requirements. Glazing shall be installed with factory labels intact and removed only when instructed. Edges and corners shall not be ground, nipped or cut after leaving factory. Springing, forcing or twisting of units during installation will not be permitted.

3.9.3.5 *Cleaning.* Upon completion of project, outside surfaces of glazing shall be washed clean and the inside surfaces of glass shall be washed and polished in accordance with glazing manufacturer's recommendations.

3.9.3.6 *Protection.* Glazing work shall be protected immediately after installation. Glazed openings shall be identified with suitable warning tapes, cloth, or paper flags, attached with non-staining adhesives. Reflective glass shall be protected with a protective material to eliminate any contamination of the reflective coating. Protective material shall be placed far enough away from the coated glazing to allow air to circulate to reduce heat buildup and moisture accumulation on the glass. Glazing units which are broken, chipped, cracked, abraded, or otherwise damaged during construction activities shall be removed and replaced with new units.

3.10 FINISHES

See Section 01335 for color submittals required. Provide color boards with all materials for COR approval prior to ordering materials. Generally all finishes shall be as shown on drawings.

3.10.1 The exterior of all buildings shall be stucco. A temperature of between 4 and 27 degrees C shall exist for a period of not less than 48 hours prior to application of plaster and for a period of at least 48 hours after plaster has set. Control joints shall be designed for expansion and contraction of plaster

work due to thermal exposure. Control joints shall comprise of back to back casing beads. Install new stucco in 2 coats. The first coat shall be a scratch coat approximately 10 mm thick. Allow 7 days to cure. The second coat shall be finish stucco, smooth finish, approximately 10 mm thick. Allow 7 days to cure before painting. Stucco showing over-sanding, cracks, blisters, pits, checks, discoloration or other defects is not acceptable. Defective plaster work shall be removed and replaced with new plaster at the expense of the Contractor. Patching of defective work will be permitted only when approved by the Contracting Officer. Patching shall match existing work in texture and color. Paint shall be designated for exterior use, with less than .06% lead by weight. Stucco shall be painted with one coat of primer and two coats of finish paint, color to be selected by the Contracting Officer from the color board provided by the Contractor.

3.10.2 Interior walls shall be plaster applied in a similar manner as exterior stucco. Paint with 2 coats of semi-gloss off-white with less than 0.06% lead by weight color to be selected by the Contracting Officer from the color board provided by the Contractor.

3.10.3 Ceilings shall be painted plaster over concrete or as shown on contract drawings.

3.10.4 Paint all exposed wood fascia, soffit, and doors with 2 coats of water-based paint, either clear or white.

3.10.5 Exposed exterior steel trim, frames, doors and pipe railings: Paint with one coat water-based primer, with 2 coats of water-based paint, color to be selected by the Contracting Officer from the color board provided by the Contractor.

3.10.6 Exposed wood trim, frames and doors: Paint with one coat oil-based primer, 2 coats of water-based paint, color to be selected by the Contracting Officer from the color board provided by the Contractor

3.10.7 *Tile.* Tile work shall not be performed unless the substrate and ambient temperature is at least 10 degrees C and rising. Temperature shall be maintained above 10 degrees C while the work is being performed and for at least 7 days after completion of work. Upon completion, tile surfaces shall be thoroughly cleaned in accordance with manufacturer's approved cleaning instructions. Acid shall not be used for cleaning glazed tile. Floor tile with resinous grout or with factory mixed grout shall be cleaned in accordance with instructions of the grout manufacturer. After the grout has set, tile wall surfaces shall be given a protective coat of a non-corrosive soap or other approved method of protection.

3.10.7.1 Floors in wet areas shall be 300 mm x 300 mm terrazzo tile with thin set mortar. Joints shall be 2-3 mm. Waterproof gray grout shall be applied the full depth of the tile. Floors shall slope, minimum 1/50, to floor drains. Slope shall be obtained with sloping mortar bed of minimum 20 mm thickness. Provide continuous waterproofing membrane beneath sloping mortar bed, turn up wall 300 mm behind wall base and ceramic tile. Membrane shall be fully sealed at joints and shall shed water into body of floor drain. Color of tile shall be selected by the Contracting Officer from samples provided by the Contractor.

3.10.7.2 Floors in administration areas/living quarters and corridors shall be 300 mm x 300 mm terrazzo tile with thin set mortar. Joints shall be 2-3 mm. Waterproof gray grout shall be applied the full depth of the tile. Color of tile shall be selected by the Contracting Officer from samples provided by the Contractor.

3.10.7.3 Walls in wet areas shall be tiled with 150 mm x 150 mm glazed ceramic tile up to 2 m above the floor to include interior of toilet stalls, showers and behind sinks. Joints shall be 2-3 mm. Waterproof gray grout shall be applied full depth of the tile. Grout shall cure for 72 hours and then be sealed with a commercial grout sealant in two coats. Color of tile shall be selected by the Contracting Officer from samples provided by the Contractor.

3.10.8 All other floors are to be completely cleaned and sealed with a concrete sealer. Color to be

selected by the Contracting Officer from samples provided by the Contractor.

3.10.9 Kitchen and Dining shall be covered with terrazzo flooring. Walls in kitchen shall be ceramic tile up to 2 m above finished floor.

3.11 SPECIALTIES

3.11.1 Mirrors. 600 mm x 900 mm, 6 mm plate glass, shall be mounted centered above all lavatories. Mount bottom of mirrors 1.1 m above finished floor.

3.11.2 Toilet Paper Holders. Toilet paper holders, stainless steel, shall be installed approximately 200 mm above floor in Eastern Toilets.

3.11.4 Paper Towel Dispensers and Waste Receptacles. Paper towel dispensers, 0.683 mm Type 304 stainless steel, surface mounted. Furnish tumbler key lock locking mechanism.

3.11.5 Light Duty Metal Shelf. Provide a 600 mm long, light duty stainless steel shelf and brackets over each lavatory.

3.12 STANDARDS

The Contractor should use the following American standards to provide sound structural design if local standards are not available, relevant, or applicable. The Contractor shall follow American Concrete Institute Standards for design and installation of all concrete structures.

Concrete	280.0 kg./sq.cm cylinder strength @ 28 days (ASTM-. C 31M)
Steel Reinforcement	4218.0 kg./sq.cm(Fy= 60.0 ksi),yield strength.
Welded Wire Fabric	ASTM A185
Anchor Bolts	ASTM A307 using A36 steel.
Mortar	ASTM C270, Type S (Ultimate compressive strength of 130.0 kg/sq. cm.)
Proportion	1 part cement, 0-1/2 part lime and 4-1/2 parts aggregate
Grout	ASTM C476 (Slump between 200 mm to 250 and Compressive Strength
	14 MPa (2000 psi) at 28 days.
Structural Steel	ASTM A36: 2530.0 kg./sq.cm (Fy = 36,000psi)
Welding	AWS (American Welding Society) D1.1-2002.

4. STRUCTURAL

4.1 GENERAL

The project consists of various structures. The new buildings shall be constructed as shown on the drawings and stated in the specifications. However, the building foundations have been designed based on assumed geotechnical design parameters. These assume parameters are shown on the foundation plans and stated in Paragraph 4.8, FOUNDATIONS. The contractor shall perform a geotechnical investigation as required in paragraph 2.1 GEOTECHNICAL, FOUNDATIONS AND SURVEY, to verify

that the foundations as designed will perform satisfactory. If the contractor determines the building foundations as designed will not function satisfactory, the contractor shall redesign the foundations accordingly. The contractor is responsible for the foundation design and construction of the foundations.

4.2 DESIGN

Foundation design shall be performed and design documents signed by a registered professional structural engineer. Calculations shall be in SI (metric) units of measurements. All components of the building shall be designed and constructed to support safely all loads without exceeding the allowable stress for the materials of construction in the structural members and connections.

4.3 DEAD AND LIVE LOADS

Dead loads consist of the weight of all materials of construction incorporated in the buildings. Live loads used for design shall be in accordance with the American Society of Civil Engineers, ASCE STANDARD, and Minimum Design Loads for Buildings and Other Structures, ASCE 7, edition as referenced herein.

4.4 WIND LOADS

Wind loads shall be calculated in accordance with ASCE 7 using a "3-second gust" wind speed of 125 km/hr. All facilities shall be classified as a minimum of Category II in accordance with Table 1-1 in ASCE 7, referenced herein.

4.5 SEISMIC

The building and all parts thereof shall be designed for the seismic requirements as defined by the International Building Code referenced herein. Site-specific data: Spectral ordinates SS=1.65g and S1=0.75g.

4.6 STRUCTURAL CONCRETE

Concrete structural elements shall be designed and constructed in accordance with the provisions of the American Concrete Institute, Building Code Requirements for Structural Concrete, ACI 318, latest edition. A minimum cylinder compressive strength of 4000 psi (28 mPa) shall be used for design and construction of all concrete. Reinforcing steel shall be deformed bars conforming to American Society for Testing and Materials (ASTM) publication ASTM a 615, Deformed and Plain Billet-Steel Bars for Concrete Reinforcement. Concrete at or below grade shall have maximum water-cement ration of 0.40. No concrete shall be placed when the ambient air temperature exceeds 32 degrees C (90 degrees F) unless an appropriate chemical retardant is used. In all cases when concrete is placed at 32 degrees C (90 degrees F) or hotter it shall be covered and kept continuously wet for a minimum of 48 hours. Concrete members at or below grade shall have a minimum concrete cover over reinforcement of 3” (75 mm).

4.7 MASONRY

Masonry shall be designed and constructed in accordance with the provisions of Building Code Requirements for Masonry Structures, ACI 530/ASCE 5/TMS 402, latest editions. Mortar shall be Type S and conform to ASTM C 270, latest edition. Masonry shall not be used below grade, unless for fully reinforced and grouted foundation stem walls.

4.8 FOUNDATIONS

The foundations shall be constructed by using reinforced concrete materials. The foundations system

for the one-story building shall be spread footings for individual column footings and grade beams as shown on the drawings. Minimum length and width of spread footings shall be as shown on the drawings. A bearing capacity of 0.75 kg/sq. cm was assumed and used in designing the building foundations. The allowable bearing pressure shall be determined by the Contractor after performing his geotechnical investigation. The maximum allowable settlement between footings shall be less than 2.5 cm. It is the contractors' responsible to perform a geotechnical investigation and determine if the foundations as shown and designed will perform satisfactory, see paragraph 2.1 GEOTECHNICAL, FOUNDATIONS AND SURVEY. If the contractor determines the foundations as designed will not perform satisfactory, the contractor shall redesign the foundations accordingly.

5. MECHANICAL

5.1 GENERAL

Heating and cooling shall be provided by the use of owner provided wood stoves, multi-speed ceiling and wall oscillating fans, ceiling or wall exhaust fans and electric unit or cabinet type space as indicated on the drawings. Provide double walled stainless steel flue vents as indicated in the contract drawings for venting of wood stoves.

5.2 SPECIALIST SUB-CONTRACTORS QUALIFICATIONS

The heating/ventilation work shall be executed by an air-conditioning specialist sub-contractor experienced in the construction of these types of systems.

5.3 CODES, STANDARDS AND REGULATIONS

The equipment, materials and works covered under the heating, ventilation and air-conditioning services shall conform to the referenced standards, codes and regulations where applicable except where otherwise mentioned under each particular clause.

5.4 DESIGN CONDITIONS

The outdoor ambient design temperatures for the summer are 97° DB, 68°F WB and for the winter is 3°F.

Air-conditioning in the selected offices and bedrooms to maintain 23.8ºC (75ºF) in summer and 21.1ºC (70ºF) in winter.

Heating in all offices, barracks, and other occupancies to maintain 21.1ºC (70ºF) indoor temperature in winter.

Noise levels inside occupied spaces generated by HVAC systems shall not exceed NC 35.

5.5 VENTILATION AND EXHAUST SYSTEMS

All fans shall be used for building ventilation and pressurization with capacities to be selected for minimum noise level generated. Unit mounted fans either used for supply or exhaust shall be centrifugal forward curved, backward inclined, or airfoil fans with non-overloading characteristics of high efficiency and quiet running design. The fans shall be of the heavy-duty type with durable construction and proved performance in a desert environment. Each exhaust fan shall be provided with shut-off dampers which close automatically when the fan is not running. Also, each fan shall be complete with vibration isolator, external lubricators where bearings require routine lubrication, and all accessories and sound attenuators as necessary.

Kitchen shall be provided with exhaust hood, with front supply slots for 100% make up air, located over major heat producing equipment. System design and installation shall be in accordance with the

requirements of NFPA 96 and the recommendations of the 1999 ASHRAE Applications handbook. Each hood shall exhaust air to the outside of the facility and contain grease (washable) filters.

5.5.1 Submittals. The Contractor shall submit the following for the equipment to be provided under this section of the specification: manufacturer's data including performance characteristics at design conditions; catalog cuts showing dimensions, performance data, electrical requirements, compliance with standards as stated in paragraph CODES, STANDARDS AND REGULATIONS; drawings indicating location and installation details.

5.6 ELECTRIC RESISTANCE SPACE HEATERS

5.6.1 Cabinet Heater. Provide a self-contained electric heating unit, recessed or surface mounted in wall or structure, with fan and heating elements. Provide control-circuit terminals and single source of power supply with disconnect. Heating wire element shall be nickel chromium. Include limit controls for overheat protection of heaters. Provide tamper resistant integral thermostat. Location shall not interfere with operation of any architectural feature (door, window, etc.).

5.6.2 Unit Heater. Provide a self-contained electric heating unit, suspended from ceiling or structure, with fan and heating elements. Provide control-circuit terminals and single source of power supply with disconnect. Heating wire element shall be nickel chromium. Include limit controls for overheat protection of heaters. Provide tamper resistant integral thermostat.

5.6.3 Submittals. The Contractor shall submit the following for the equipment to be provided under this section of the specification: manufacturer's data including performance characteristics at design conditions; catalog cuts showing dimensions, performance data, electrical requirements, compliance with standards as stated in paragraph CODES, STANDARDS AND REGULATIONS; drawings indicating location and installation details.

5.7 CEILING AND WALL FANS

5.7.1 Ceiling Fan. Provide 1,320 mm blade ceiling fans at one per 40 square meters of floor space. Fans shall have reversible motors. Center or distribute evenly in room. Coordinate placement with the lighting plan to prevent conflict or casting shadows. Fan mount shall be flush, standard, or angle mount depending on ceiling height. Fan shall be mounted such that the fan blade is approximately 2,440 mm above the finished floor. The fan shall be provided with out light kit. The finish shall be factory painted white. The controls shall be from either a single pole switch or from two 3 way switches to provide on/off operation. The electrical supply shall be 220volts, single phase, and 50 hertz. Install per manufacturers' instructions.

5.7.2 Oscillating Wall Fans. Provide 460 mm diameter wall fans as shown on plans. Coordinate placement with the lighting plan to prevent conflict or casting shadows. Fan mount shall be painted steel wall bracket and mounted such that the fan blade is approximately 2,100 mm above the finished floor. The finish shall be factory painted white. The controls shall be from either a single pole switch or from two 3 way switches to provide on/off operation. The electrical supply shall be 220 volts, single phase, and
50 hertz. Install per manufacturers' instructions.

5.7.3 Submittals. The Contractor shall submit the following for the equipment to be provided under this section of the specification: manufacturer's data including performance characteristics at design conditions; catalog cuts showing dimensions, performance data, electrical requirements, compliance with standards as stated in paragraph CODES, STANDARDS AND REGULATIONS; drawings indicating location and installation details.

5.8 COOKING STOVES

5.8.1 Propane Stove Cooking. Cooking area shall be provided canopy type exhaust only kitchen

hoods and associated exhaust fans. These exhaust hoods shall include baffle type aluminum filters to trap grease/oil. The exhaust fan sizing calculations should recognize the use of propane stoves in the kitchen. Sizing should accommodate all propane burning stoves running simultaneously. Additionally, the placement of the exhaust hood should allow enough clearance for an average sized male to stand on top of the stove platform unobstructed, for standing on the stove is common local cooking practice. The higher than average placement of the hood will require the extension of the lip of the hood out further than normal, in order to catch the majority of the smoke and adequately vent the area. Minimum gas supply pressure to control valve is 254 mm W.G. not to exceed 335.6 mm W.G. Provide visible master cut off switch for gas supply to propane stove.

Make-up air for kitchen hood exhaust shall be supplied by inline centrifugal supply fan pulling air in from roof mounted, louvered, penthouse with intake air filter and backdraft dampers.

5.8.2 Wood Stove Cooking. Provide cast iron stoves, minimum cast iron wall thickness shall be 25 mm. Route the chimney runs inside the building envelope so air and flue gases stay at least as warm as the air in the building until they are expelled outside. The Contractor shall protect chimney by means of metal rails or masonry wall from damage from large pots during cooking. The chimney shall penetrate and extend above the highest part of the building envelope so the chimney functions better. The chimney shall rise at least 600 mm (24 inches) above the roof ridge and its top is clear of obstacles to wind flow so it can produce stable draft and it has a chimney (rain) cap. The chimney flue shall be insulated and be the correct size for the appliance so flue gases are kept warm and flow quickly through the system. The flue pipe, if used, shall run straight up from the appliance to the chimney and the chimney has no offsets because each change in direction presents resistance to flow. The appliance and venting system shall be reasonably well-sealed to prevent leaks that introduce cool air and make the system more vulnerable to adverse pressures. There shall be no exhaust fan in the stove exhaust. The Wood stove kitchen shall be well vented with louvers located high at walls on the building ends.

5.8.3 Submittals. The Contractor shall submit the following for the equipment to be provided under this section of the specification: manufacturer's data including performance characteristics at design conditions; catalog cuts showing dimensions, performance data; drawings indicating location and installation details.

5.9 TEST ON COMPLETION

After completion of the work, the Contractor shall demonstrate to the Contracting Officer that the installation is adjusted and regulated correctly to fulfill the function for which it is intended. The Contractor shall test, adjust, balance and regulate the section or sections of concern as necessary until the required conditions are obtained. Include tests for all interlocks, safety cutouts and other protective devices to ensure proper function. All such tests shall be carried out and full records of the values obtained shall be prepared along with the final settings and submitted to the Contracting Officer in writing.

6. PLUMBING

6.1 SYSTEM REQUIREMENTS

Domestic water and waste systems shall be provided to each area with fixtures requiring water and/or waste connections such as toilets, etc. The entire water system shall include cold water to each fixture as well as to a water heater. Hot water shall be distributed to all kitchen sinks, showers, etc. as indicated. The water distribution and waste systems shall be in complete accordance with the requirements of the International Plumbing Code (IPC, latest edition). The Contractor shall furnish, install and test the domestic water supply system as shown on the drawings. Contractor shall install the domestic water tank system such that can be easily converted to a permanent system in the future. All water distribution system components exposed to the outdoors shall be provided with freeze protection to ensure water is available throughout the year.

6.2 PIPING MATERIALS

Domestic water shall be distributed by means of galvanized steel or copper for the pressure to be utilized.

6.2.1 Insulation. All domestic water pipe and fittings exposed and not inside an insulated wall shall be insulated. In addition, all water pipe that is exposed shall also be covered with metal jacketing. Water piping exposed to outdoor conditions shall be insulated and jacketed and provided with heat trace to prevent freezing.

6.3 FIXTURES

All plumbing fixtures shall be provided with p-traps and shall be vented to the roof per International Plumbing Code, latest edition. Fixtures provided inside the prison cells shall be institutional type and tamper-proof.

6.3.1 Eastern Style Water Closet with Flush Tank. Provide acid resisting fired porcelain enameled cast iron water closet complete with rotating No-Hub 'P' trap and No-Hub coupling to meet piping requirements. Eastern Style water closet shall be furnished with integral non-skid foot pads and bowl wash down non-splashing flushing rim. The water closet shall be completely self supporting requiring no external mounting hardware and shall be flush with floor. The Eastern Style water closet shall incorporate waterproofing membrane flashing flange. Provide wall mounted hose next to the water closet stall. Toilets shall be oriented North and South. Toilets shall not face East or West. Contractor shall verify all eastern toilets are facing North and South and adjust building orientation or rotate toilets as necessary for each site.

6.3.2 Ablution. Ablution shall be a 600mm wide floor trough continuous across length of room with and sloped to floor drain. Trough shall be created by installing a 200mm high cmu curb across width of room. Curb and trough lining shall have ceramic tile finish. Water shall be supplied by two separate wall mounted faucets providing hot and cold water. Mounting height of faucets shall be 600mm above trough floor finish.

6.3.3 Lavatories. All sinks shall be trough type constructed of block and concrete with ceramic tile exterior and lining capable of withstanding abuse. Faucets shall be chrome plated brass single lever mixing type. Provide maintenance access to waste piping and P-traps from under the sink. Lavatories inside the prison cells shall be temper-proof with integral spout, soap depression, and outlet connection to slip 40 mm OD tubing.

6.3.4 Water Heater. Electric type water heaters shall conform to UL 174 with dual heating elements. Each element shall be rated as indicated on plans. The elements shall be wired so that only one element can operate at a time. Each water heater shall have controls with an adjustable range that includes 32 to 71 degrees C. Electrical wiring shall be installed per the NEC and the manufacturer’s instructions. Piping and fittings for hot, cold drain, and pressure temp connections shall be installed per the manufacturer’s recommendations.

6.3.5 Plastic Shower Stalls. Provide one piece or four piece white solid acrylic pressure molded fiberglass reinforced plastic shower stalls. Shower stalls shall be scratch resistant, waterproof, and reinforced. Provide recessed type shower stalls approximately 914 mm wide, 914 mm front to rear, 1,829 mm high, and 125 high mm high curb with shower stall bottom or feet firmly supported by a smooth level floor. Provide galvanized shower floor drains and stainless steel strainers. Install shower stall in accordance with the manufacturer's written instructions. Provide smooth 100 percent silicone rubber white bathtub calk between the top, sides, and bottom of shower stalls and bathroom walls and floors.

6.3.6 Scullery Sink (Kitchen Area). Provide 14 gauge, type 304, (18-8) stainless steel, sink with drain board. Compartments shall be large enough to wash pots 1 meter in diameter. Sink shall be

supported on four stainless steel legs. Sink shall have pre-drilled in backsplash at manufacturer for commercial faucet. Commercial faucet shall be solid brass construction, chrome finish, wall mount 203 mm center arc tube.

6.3.7 Drains

a. Floor Drain and Shower Drain. Floor drains and shower drains shall consist of a galvanized body, integral seepage pan, and adjustable perforated or slotted chromium-plated bronze, nickel-bronze, or nickel-brass strainer, consisting of grate and threaded collar. Floor drains shall be cast iron except where metallic waterproofing membrane is installed.

b. Grease Interceptor. Steel construction, manual cleaning type with removable checker-plate cover; complete with flow control valve. Tested and rated in accordance with PDI G-101. Concrete shall have 21 MPa (3045 PSI) minimum compressive strength in 28 days. Flow rate and capacity shall be as indicated on the plans.

6.3.8 Hose Bibb. Room hose bibs and building wall hydrants shall be provided at interior locations and in other locations as indicated on plans.

6.3.9 Trench Type Floor Drain. Trench type floor drains shall consist of a cast iron or galvanized body, dome strainer, integral seepage pan, and slotted chromium-plated bronze, nickel-bronze, or nickel-brass grate. Grate in kitchen shall be 300 mm wide and 2.4 m long.

6.4 GENERATOR FUEL STORAGE

The work shall include the fabrication and installation of the entire fuel storage and distribution system. Fuel piping shall be sloped to fill point. Below ground piping shall be double walled carbon steel piping with interstitial space. Bulk fuel tanks shall be skid mounted. Tanks of this type that have a capacity above 2640 L will be provided with a either a dike or a spill containment system with protective coating to prevent seepage of fuel into groundwater. The dike or spill containment system should have enough capacity for the entire contents of the largest tank plus 10 percent. Provide a molded neoprene isolation pad to isolate an aboveground tank from the concrete pad underneath. Steel tank supports specifically are prone to encounter premature rusting due to constant exposure to moisture and their incompatibility with concrete. Tank shall be designed and manufactured for horizontal installation. Tank shall be mounted on the tank manufacturer's standard support skid. Skid shall span the entire length of the tank and shall separate the tank from the reinforced concrete slab by a minimum of 200 mm. Indicate on the drawings the number and size of each tank manway required. Tanks of 3,780 to 45,430 L to capacity will be provided with 760 mm diameter manways. Tanks larger than 45,430 L will be provided with 915 mm diameter manways. Tanks 3,780 L and larger will be provided with a minimum of 1 tank manway to allow for internal tank access. Piping will not penetrate through access manways. Tank shall be provided with a combination cleanout and gauge connection. Vent pipe sizing shall be not less than 32 mm nominal inside diameter. Vent shall be the rupture disc type calibrated to burst at 13.8 kPa pressure, and operate at 80 percent of burst setting. Tank shall be provided with an overfill alarm system. Tank shall be provided with 2 stick gauges graduated in m and mm. Stick gauge shall be of wood and treated after graduating to prevent swelling or damage from the fuel being stored. Each storage tank shall be provided with an automatic analog reading gauge which is directly mounted to a tank's manway cover. Provide cathodic protection for metal components. Storage tanks shall be handled with extreme care to prevent damage during placement and shall be installed in accordance with the manufacturer's installation instructions. Piping shall be inspected, tested, and approved before burying, covering, or concealing. Piping shall be installed straight and true to bear evenly on supports. Piping shall be free of traps, shall not be embedded in concrete pavement, and shall drain toward the corresponding storage tank. Any pipe, fittings, or appurtenances found defective after installation shall be replaced. Belowground nonmetallic pipe shall be installed in accordance with pipe manufacturer's instructions. Belowground piping shall be laid with a minimum pitch of 25 mm per 6 m.

6.4.1 Testing. A tightness test shall be performed on each aboveground storage tank. The tests shall be performed prior to making piping connections. Tests shall be capable of detecting a 0.1 mL/s leak rate from any portion of the tank while accounting for effects of thermal expansion or contraction. Each storage tank shall be pressurized with air to 35 kPa and monitored for a drop in pressure over a 2-hour period during which there shall be no drop in pressure in the tank greater than that allowed for pressure variations due to thermal effects. Following the tank tightness test, each storage tank shall be leak tested in accordance with the manufacturer's written test procedure if the manufacturer's test procedure is different from the tightness tests already performed. Each storage tank shall be filled with the proper fuel.

Submittals:
Manufacturer's standard catalog data
Installation Manual
Operation and Maintenance Manuals
Tests Results:
Six copies of each test containing the information described below in bound letter-size booklets. Individual reports shall be provided for the storage tank tests, the piping tests, the system performance tests, the high level alarm test, and the system leak tests. Drawings shall be folded blue lines, with the title block visible.
a. The date the tests were performed.
b. A list of equipment used, with calibration certifications.
c. A copy of measurements taken.
d. The parameters to be verified.
e. The condition specified for the parameter.
f. The inspection results, signed, dated, and certified by the installer. The certification shall state that required procedures were accomplished, that the procedures were conducted in compliance with the plans and specifications.
g. A description of adjustments performed.

6.5 SUBMITTALS

The Contractor shall submit the following for the equipment to be provided under this section of the specification: manufacturer’s data including performance characteristics at design conditions; catalog cuts showing dimensions, performance data, electrical requirements, and drawings indicating location and installation details.

7. FIRE PROTECTION

7.1 GENERAL

Facility construction and fire protection systems shall be installed in accordance with the publications listed herein and the publications referenced therein. Where a conflict occurs among various criteria, the more stringent requirement shall take precedence.

7.2 BUILDING CONSTRUCTION

Building construction shall conform to fire resistance requirements, allowable floor area, building height limitations and building separation distance requirements of the building code.

7.3 FIRE PROTECTION EQUIPMENT

Per user, a sprinkler system is not required.

7.4 FIRE ALARM AND DETECTION

Per user, a fire alarm and detection system is not required.

7.5 WATER SUPPLY FOR FIRE PROTECTION

Water supply for fire protection is not required.

7.6 PORTABLE FIRE EXTINGUISHERS

Portable fire extinguishers (PFEs) shall be provided (and installed) in the Kitchen, DFAC, and in each hallway in accordance with the requirements of NFPA 10. Portable fire extinguishers shall be Multi-purpose Dry Chemical rated 4A:80B:C. Extinguishers shall be wall-mounted on hanger hooks with at least 12 inches clearance from the floor in easily accessible locations. Travel distance to an extinguisher from any location in the building shall be no greater than 75 feet.

8. ELECTRICAL

8.1 SCOPE OF WORK

8.1.1 General. Contractor shall construct following systems in compliance with the attached contract drawing and as described below. Systems shall include but not limited to:

(1) On-site Prime Power Generating Plant

(2) Exterior Underground Secondary Power Distribution System

(3) Interior Secondary Distribution System

(4) Lighting and power branch circuitry

(5) Interior telephone conduit system

(6) Lightning Protection System

8.1.2 All of the systems shall be designed for the ultimate demand loads, plus 20% spare capacity. Above Systems shall be designed for and to provide service to the following facilities as a minimum:

(1) ANP Headquarters / Administration Building

(2) Guard Shacks - 2

(3) Guard Towers - 4

(4) Power Plant Sunshade

(5) Well House

See Site Plan for details.

8.2 DESIGN CRITERIA

8.2.1 Applicable Standards

- National Fire Protection Association, NFPA 70 (National Electric Code, 2005 Edition).

- National Fire Protection Association, Life Safety Code, NFPA 101 (Limited to emergency lights and exit sign locations)

- National Fire Protection Association, Lightning Protection Code, NFPA 780

- Illuminating Engineering Society of North America (IES)

- Applicable Afghan Standards, as a minimum.

8.2.2 Design shall be in metric units.

8.2.3 Conflicts between criteria and/or local standards shall be brought to the attention of the Contracting Officer for resolution. In such instances, all available information shall be furnished to the Contracting Officer for approval.

8.3 MATERIAL

8.3.1 General. Unless noted otherwise, all material used shall be in compliance with the requirements of the applicable German (DIN) Standards. In the event DIN Standard material is unavailable, contractor may then select comparable British Standard (BS), or Underwriters Laboratories Inc. (UL) listed material. Equipment enclosure types shall be in compliance with the National Electrical Manufacturer's Association (NEMA) or the International Electro-Technical Committee (IEC) standards. Material and equipment installed under this contract shall be for the appropriate application.

8.3.2 Standard Product. All material and equipment shall be a standard product of a manufacturer regularly engaged in the manufacture of the product and shall essentially duplicate items that have been in satisfactory use for at least two (2) years prior to bid opening.

8.3.3 Design Conditions. All equipment shall be rated and designed for 40 Degree Centigrade and elevation of 2000 m above sea level.

8.3.4 Restrictions. Aluminum conductors shall not be used or specified.

8.4 DESIGN REQUIREMENTS

8.4.1 Power Plant. On-site Prime Power Generating Plant shall be provided for this Compound as per that attached drawings. Electrical equipment shall include, but not be limited to, diesel engine generators, secondary voltage switchboard, relaying equipment and all other auxiliary equipment that is necessary for operating a Prime Power Plant. All major equipment shall have brief operating instructions posted on them in English and Afghan languages. Secondary wiring within the building shall be per paragraph ‘Secondary Power Distribution System’, as noted below. All cabling within the Power Plant associated with Power Generation (Generator to Switchboard) shall be installed underground in direct buried PVC Schedule 40 (Sch 40) conduits. Power plant shall be provided with a Lightning Protection System.

8.4.1.1 *Generators.* One (1) generator, rated at 80KW, shall be provided inside 'weather-proof' enclosures and shall be for exterior application. Generator shall be skid mounted standard industry size, 1500 RPM; diesel-engine Prime Power rated unit. Generating voltage shall be 3 phase, 380Y/220 volts and 50 Hertz, for Compound wide Secondary Power Distribution, through the generator switchboard as described below. Generator starting shall be electric. Generator shall be provided with an integral day tank as required to provide a minimum fuel capacity of 8 hours operating at 100% generator rating (name plate kW rating). See drawings for detail requirements.

8.4.1.2 *Load Bank.* Contractor shall provide a factory manufactured, industry standard permanent load bank connected to the generator secondary switchboard bus to supplement for low demand load on the operating generator. Load bank shall be rated at 120 kW, with 20 kW load steps. Unit shall be provided with a control panel and necessary circuit protection.

8.4.1.3 *Fuel Storage / Distribution System.* Refer to Mechanical Section 01015 and design drawings for generator fuel storage / distribution system requirements.

8.4.1.4 *Miscellaneous.* Contractor shall be responsible for providing all relaying, metering and power plant grounding equipment necessary for safe and efficient operation of the power plant. Relaying shall include, but not be limited to, differential, locking-out, over current, directional and reverse power.

8.4.1.5 *Generator Switchboard.* Generator Switchboard shall be located with the generators and shall be the central distributing point for the Site Secondary Power Distribution System. Switchboard shall be circuit breaker type, consisting of a main circuit breaker, feeder circuit breakers for service to various facilities on the Compound. Switchboard shall be sized and provided with the required number of circuit breakers to service all facilities in this Contract and future facilities identified on the Site Plan. In addition, the Switchboard shall be provided with two (2) spaces for any future 3 pole circuit breakers. See Power Plant design drawings for details. Switchboard shall be provided inside a 'weather-proof' enclosure and shall be for exterior application.

8.4.1.6 *Operating Instructions.* Contractor shall provide, mounted in a frame, a complete electrical one-line diagram of the power plant with detail operating instruction. Instructions shall be mounted inside respective generator and switchboard enclosures. Similarly, complete fuel and cooling system schematic diagrams shall also be provided with the operating instructions. Brief operating instructions shall be posted on major components at the power plant. These instructions shall be written in English and Afghanistan languages.

8.4.2 Site Secondary Power Distribution System. This shall include installation of Secondary Power Distribution Systems in underground, direct buried PVC Schedule 40 conduits system. System shall include hand-holes for secondary power cables.

8.4.2.1 *Raceways.* Exterior raceways (conduits) shall be installed at a slope towards the hand-hole to avoid collection of water in the raceway. Conduit shall be PVC, Schedule 40. Secondary cable shall be installed in conduit no less than 50 mm (2 inch). Duct bank conduits shall be cleaned with a wire mandrel prior to the installation of cables. Minimum of two (2) spare conduits shall be provided in all main trunks and capped at both ends. Top of the conduits shall be below the frost line or a minimum of 24 inch (600 mm) below grade.

8.4.2.2 *Cables.* All secondary voltage cables shall be copper, designed for underground installation and shall have appropriate secondary voltage ratings.

8.4.3 Secondary Power Distribution System. Secondary Power shall be 380/220 volts, 3 phase, 4 wire, 50 Hz. Building secondary power distribution system shall include main distribution panel. All panel boards shall be factory fabricated, ‘bolt-on’ circuit breaker type and each provided with a main circuit breaker. In large buildings, with 225 Amp or greater service, separate lighting and power panels shall be provided. It is recommended that minimum size circuit breaker be rated at 20 amperes. Circuit breakers shall be connected to bus bar(s) within the panel boards. Daisy chain (breaker-to-breaker) connection(s) shall not be acceptable. Indoor distribution panels and load centers shall be flush mounted in finished areas. All circuit breakers shall be labeled with an identification number corresponding to the panel schedule. A 3-pole circuit breaker shall be a single unit and not made up of 3 single pole circuit breakers connected with a wire or bridged to make a 3-pole breaker. All wiring shall be copper, minimum # 12 AWG (4 mm sq) and installed in surface mounted metal conduits. All panels shall be provided with a minimum of 20% spare capacity for future load growth. Power receptacles (outlets) shall be duplex,
240 volts, 50 HZ, German (DIN) Standard. All splicing and terminations of wires shall be performed in a junction or device boxes. Proper wire nuts/connectors shall be used for splicing wire. No twist-wire connections with electrical tape wrapped around it shall be acceptable. All electrical installation shall be in accordance with the requirements of NFPA 70 (National Electric Code). Main Distribution Panel in large buildings shall be provided with an ammeter, voltmeter and kilowatt-hour meter. Selector switch shall be provided for reading all 3 phases. All service entrance cables and equipment, such as main

distribution panels etc., to the facilities shall be sized for the ultimate facility loads, to include any heating and air-conditioning loads, initial and / or future, to be provided by others.

8.4.3.1 *Receptacles.* General purpose receptacles shall be duplex, grounding (earthed) type, 'surface' wall mounted type, color ivory and installed 500 mm above finished floor (AFF). In office or similar areas receptacles shall be provided at 3 M intervals. CEE Type receptacles with plugs (2P+E (240v) or 3P+E (380v) and with appropriate rating, shall be provided for, but not be limited to, kitchen equipment and any other type of large plug-able equipment. Receptacle shall be complete to include box, cover plate and necessary screws/connectors and of the type most commonly used in Afghanistan. Receptacles near sinks or lavatories shall be switch operated and Ground Fault Circuit Interrupter (GFCI), or Residual Current Disconnect (RCD) type, with the trip setting of 10 milliampere or less.

8.4.3.2 *Light Fixtures.* Lighting fixtures shall be a standard manufacturer's product. Fluorescent light fixtures shall be power factor corrected and equipped with standard electronic ballast(s). All light fixtures shall be capable of receiving standard lamps used and available locally. Light fixtures shall be mounted at 2.7 m, minimum, AFF. Fixtures may be pendant or ceiling mounted, depending on the ceiling height and type. Light fixtures provided inside jail cells shall be vandal resistant and detention center grade fixtures. All fixtures shall be fully factory wired.

8.4.3.3 Light Switch: Light switch shall be single pole. Minimum of one light switch shall be provided in every room. Lighting in large rooms/areas may be controlled from multiple switches. Lighting contactors may be used to operate lighting in open or large bay areas.

8.5 SEARCH LIGHT

Search light shall be prison / security search light and provided on top of each Guard Tower. Search light shall be operable from inside the guard tower cab. See design drawings for details.

8.6 CONDUCTORS

All cable and wire conductors shall be copper. Conductor jacket or insulation shall be color coded to satisfy local utility requirements.

8.7 GROUNDING & BONDING

Grounding and bonding shall comply with the requirements of NFPA 70. Underground connections shall be exothermal welded. All exposed non-current carrying metallic parts of electrical equipment in the electrical system shall be grounded. Insulated grounding conductor (separate from the electrical system neutral conductor) shall be installed in all feeder and branch circuit raceways. Grounding conductor shall be green-colored, unless the local authority requires a different color-coded conductor. Ground rods shall be 20 mm in diameter, 3 m long and of copper-clad steel. Ground resistance shall not exceed 25 ohms when measured less than 48 hours after rainfall.

8.8 ENCLOSURES

Enclosures for exterior and interior applications shall be NEMA Type 3R (IEC Classification IP56) and NEMA Type 1 (IEC Classification IP10), respectively.

8.9 IDENTIFICATION NAME PLATES

Major items of electrical equipment, such as the generators, switchboard, panel boards and load centers, shall be provided with a permanently installed engraved identification nameplate.

8.10 SCHEDULES

All panel boards and load centers shall be provided with a panel schedule. Schedule shall be typed written in English and Afghan languages.

8.11 SINGLE LINE DIAGRAMS

Complete single line diagram shall be provided in the Power Plant Switchboard Room and in Panel boards in each building. Single line diagram shall show all panels serviced from the generator switchboard and from main distribution panel in each building.

8.12 ACCEPTANCE TESTS

All systems shall be tested in the presence of the COR for satisfactory operation prior to the turnover and acceptance of the facilities by the Government.

-- End of Section --

SECTION 01060

SPECIAL CLAUSES

PART 1 GENERAL

1.1 PRECONSTRUCTION CONFERENCE

1.1.1 Schedule of Meeting

At the earliest practicable time, prior to commencement of the work, the Contractor and any Subcontractors whose presence is necessary or requested, shall meet in conference with representatives of the Contracting Officer to discuss and develop a mutual understanding relative to the details of the administration and execution of this contract. This will include but not necessarily be limited to the Contractor's Quality Control (CQC) Program, the Contractors Accident Prevention Program, submittals, correspondence, schedule, access to the work site, security requirements, interface requirements, temporary facilities and services, hazards and risks, working after normal hours or on weekends or holidays, assignment of inspectors, representations, special requirements, phasing, and other aspects of this project that warrant clarification and understanding.

1.1.2 Meeting Minutes

It shall be the responsibility of the Contractors CQC System Manager to prepare detailed minutes of this meeting and submit those minutes to the Contracting Officer for approval within three (3) workdays. Any corrections deemed necessary by the Contracting Officer shall be incorporated and resubmitted within two (2) calendar days after receipt. Upon approval of the minutes by the Contracting Officer, the Contractor shall distribute the minutes to all parties present or concerned.

1.2 AREA USE PLAN

The Contractor shall submit to the Contracting Officer, within ten (10) calendar days after award of this contract, an Area Use Plan designating intended use of all areas within the project boundaries. This plan shall include, but not necessarily be limited to the following: the proposed location and dimensions of any area to be fenced and used by the Contractor; construction plant and building installations/the

number of trailers and facilities to be used; avenues of ingress/egress to the fenced areas and details of the fence installation; drawings showing temporary electrical installations; temporary water and sewage disposal installations; material storage areas; hazardous storage areas. Any areas that may have to be graveled shall also be identified. The plan shall also include a narrative description of the building structural system, the site utility system and the office or administration facilities. The Contractor shall also indicate if the use of a supplemental or other staging area is desired. The Contractor shall not begin construction of the mobilization facilities prior to approval by the Contracting Officer of the Area Use Plan described herein.

1.3 CONTRACTOR'S MOBILIZATION AREA

The Contractor will be permitted to use an area approved by the Contracting Officer within the contract limits for operation of his construction equipment and plants, shops, warehouses, and offices. The Contractor is responsible for obtaining any required additional mobilization area above that designated. The construction site shall be cleared of construction debris and other materials and the area restored to its final grade.

1.3.1 Contractor's Temporary Facilities

1.3.1.1 General

All facilities within the Contractor's mobilization area shall be of substantial construction suitable for the local weather conditions. Sanitary facilities shall meet the requirements of Corps of Engineers, Safety and Health Requirements Manual EM 385-1-1.

1.3.1.2 Administrative Field Offices

The Contractor may provide and maintain administrative field office facilities within the mobilization area at the designated site. Government office and warehouse facilities will not be available to the Contractor's personnel.

1.3.1.3 Storage Area

The Contractor shall construct a temporary 1.8 meter (6 foot) high chain link fence around trailers and materials. The fence shall include plastic strip inserts, colored green or brown, so that visibility through the fence is obstructed. Fence posts may be driven, in lieu of concrete bases, where soil conditions permit. Trailers, materials, or equipment shall not be placed or stored outside the fenced area unless approved in writing by the Contracting Officer.

1.3.1.4 Plant Communication

Whenever the Contractor has the individual elements of its plant so located that operation by normal voice between these elements is not satisfactory, the Contractor shall install a satisfactory means of communication, such as telephone or other suitable devices. These devices shall be made available for use by Government personnel.

.

1.3.1.5 Appearance of Mobilization Site Facilities and/or Trailers

Mobilization Site Facilities and/or Trailers utilized by the Contractor for administrative or material storage purposes shall present a clean and neat exterior appearance and shall be in a state of good repair. Trailers or other transportable structures which, in the opinion of the Contracting Officer, require exterior painting or maintenance will not be allowed on the construction site until such work or maintenance has been performed to the satisfaction of the Contracting Officer.

1.3.1.6 Maintenance of Storage Area

Fencing shall be kept in a state of good repair and proper alignment. Should the Contractor elect to traverse unpaved areas which are not established roadways with construction equipment or other vehicles, such areas shall be covered with a layer of gravel as necessary to prevent rutting and the tracking of soil onto paved or established roadways; gravel gradation shall be at the Contractor's discretion.

1.3.1.7 Security Provisions

Adequate outside security lighting shall be provided at the Contractor's temporary facilities. The Contractor shall be responsible for the security of its own facilities and equipment.

1.3.1.8 Sanitation

a. Sanitary Facilities: The Contractor shall provide portable sanitation facilities for the Contractor’s use. The Contractor shall be responsible for maintaining such facilities at no expense to the Government.

b. Trash Disposal: The Contractor shall be responsible for collection and disposal of trash from the work areas and from the mobilization area. General construction debris and demolition debris shall be collected and transported by the Contractor to a location designated by the Government. Construction debris, waste materials, packaging material and the like shall be removed from the work site daily. Loose debris capable of being windblown, shall be immediately placed in sealed or covered containers to prevent it from being blown onto taxiways or runways. Any dirt or soil that is tracked onto paved or surfaced roadways shall be cleaned daily. Materials resulting from demolition activities that are salvageable shall be stored within the fenced area described above. Stored material not indoors, whether new or salvaged, shall be neatly stacked when stored.

1.3.1.9 Telephone

The Contractor shall make arrangements to install and pay all costs for telephone facilities desired.

1.3.1.10 Restoration of Storage Area

Upon completion of the project and after removal of mobilization facilities, trailers, materials, and equipment from within the fenced area, the fence shall be removed and will become the property of the Contractor. Areas used by the Contractor for the storage of equipment or material, or other use, shall be restored to the original or better condition. Gravel used to traverse unpaved areas shall be removed and all such areas restored to their original conditions.

1.3.2 Protection and Maintenance of Traffic

During construction the Contractor shall provide access and temporary relocated roads as necessary to maintain traffic. The Contractor shall maintain and protect traffic on all affected roads during the construction period except as otherwise specifically directed by the Contracting Officer. Measures for the protection and diversion of traffic, including the provision of watchmen and flagmen, erection of barricades, placing of lights around and in front of equipment and the work, and the erection and maintenance of adequate warning, danger, and direction signs, shall be as required by the Host Nation and base authorities having jurisdiction. The traveling public shall be protected from damage to person and property. The Contractor's traffic on roads selected for hauling material to and from the site shall interfere as little as possible with base traffic. The Contractor shall investigate the adequacy of existing roads and the allowable load limit on these roads. The Contractor shall be responsible for the repair of any damage to roads caused by construction operations.

1.3.2.1 [Not used.]

1.3.3 Temporary Project Safety Fencing and Barricades

The Contractor shall impose all measures necessary to limit public access to hazardous areas and to ensure the restriction of workers to the immediate area of the construction and mobilization site. The Contracting Officer may require in writing that the Contractor remove from the work any employee found to be in violation of this requirement.

1.3.3.1 Barricades

Barricades shall be required whenever safe public access to paved areas such as roads, parking areas or sidewalks is prevented by construction activities or as otherwise necessary to ensure the safety of both pedestrian and vehicular traffic. Barricades shall be securely placed, clearly visible with adequate illumination to provide sufficient visual warning of the hazard during both day and night. Travel to and from the project site shall be restricted to a route approved by the Contracting Officer.

1.3.4 Host Nation Authorizations, Permits and Licenses

It shall be the Contractor's responsibility to obtain such local authorizations, permits and licenses necessary to establish his quarry operations, batching operations and haul routes (See Special Clause entitled: COMPLIANCE WITH HOST COUNTRY RULES AND CUSTOMS).

1.4 RESPONSIBILITY FOR PHYSICAL SECURITY

Prior to mobilization, the Contractor shall submit his proposed means of providing project security to prevent unauthorized access to equipment, facilities, materials and documents, and to safeguard them against sabotage, damage, and theft. The Contractor shall be responsible for physical security of all materials, supplies, and equipment of every description, including property which may be Government-furnished or owned, for all areas occupied jointly by the Contractor and the Government, as well as for all work performed.

1.5 DUST CONTROL

The Contractor shall be required to control objectionable dust in the work areas, access roadways, and haul roads by means of controlled vehicle speeds or dust palliatives. Vehicles transporting sand, cement, gravel or other materials creating a dust problem shall be covered, as directed by the Contracting Officer, or in accordance with local Laws, codes, and regulations.

1.6 DIGGING PERMITS

Requests for Digging Permits shall be submitted to Contracting Officer a minimum of seven (7) days prior to the start of the work activity covered by the permit. The request for a Digging Permit shall include a narrative description of the work to be performed and a detailed map of the area of the excavation clearly marking the location of all known utilities or other obstructions. If the work activity covered by the Digging Permit request also requires a utility outage, a separate request for the outage shall be submitted in accordance with the paragraph entitled CONNECTIONS TO EXISTING UTILITIES.

1.6.3 Preparation of Requests for Digging Permits

Prior to submitting a request for a Digging Permit, the Contractor shall carefully review the area to be excavated to determine the location of existing utilities and other obstructions. The Contractor will review available drawings and will conduct a visual inspection of the site. The Contractor will utilize underground utility detecting devices such as metal and cable detectors to determine the location of existing utilities. All utility lines found shall be clearly flagged or marked and the location of the utility shall be shown on the drawing to be submitted with the request for Digging Permit.

1.6.4 Existing Underground Utilities

The Contractor shall exercise utmost care in researching locations of existing utilities and reducing damage to existing utilities. Any utilities damaged by the Contractor shall be promptly repaired by the Contractor. The Contracting Officer will review and approve any proposed repairs. Any damage to existing utilities will be immediately reported to the Contracting Officer and the Base Commander.

1.7 CONNECTIONS TO EXISTING UTILITIES

1.7.1 General

Any outage involving disruption of electrical service beyond the site area shall be requested in writing at least ten (10) days in advance of the date requested for the commencement of the outage. The Contractor shall provide a request, detailing the type of outage needed (water, sewer, electrical, steam, etc.), the time needed to perform the work, the reason for the outage, and the known affected facilities. The Contracting Officer shall be contacted prior to the outage to confirm the time and date. If the Contractor fails to initiate work at the approved time, the Contracting Officer may cancel the approved outage and may direct the Contractor to resubmit a new request. No part of the time lost due to the Contractors failure to properly schedule an outage shall be made the subject of claim for extension of time or for excess costs or damages by the Contractor.

1.7.1.1 [Not used.]

1.7.1.2 Exterior Night Lighting

Exterior night lighting shall be provided in conformance with EM-385-1-1 entitled Safety and Health Requirements Manual.

1.7.2 Existing Underground Utilities

The Contractor is provided notice that existing utilities may be present in the construction area. The Contractor shall exercise the utmost care in researching locations of existing utility lines by implementing control measures to eliminate, or reduce to a level acceptable to the Contracting Officer, the chance of damaging or destroying existing utilities.

1.7.2.1 Use of Underground Utility Detecting Device

Prior to any excavation, a metal and/or cable-detecting device shall be used along the route of the excavation. All underground utilities discovered by this method will be flagged a minimum distance of one-half (1/2) meter on each side of the location.

1.7.2.2 Hand Excavation

Hand excavation methods and special supervisory care shall be used between any flagged markers, in areas of known or suspected hazards, and in areas known or suspected to have multiple and/or concentrated utility lines or connections.

1.7.3 Repair of Damaged Utilities

The Contractor shall be responsible to repair any utilities damaged by him. The method of repair and schedule for performance of the repair shall be coordinated with, and subject to the approval of, the Contracting Officer. The repair work and any temporary work required to keep the system operational while repairs are being completed, shall be performed at no cost to the Government.

1.8 NOT USED

1.9 NOT USED

1.10 ELECTRICITY (CONTRACTOR PROVIDED)

Electrical service is not available for use under this contract; therefore all electric current required by the Contractor shall be the responsibility of the Contractor, furnished at his own expense. The Contractor shall provide diesel generators to meet his demand requirements. Electricity required for final testing systems will be furnished by the Government. The means of doing so, such as by temporary distribution systems, shall be the responsibility of the Contractor. All temporary connections for electricity shall be subject to the approval of the Contracting Officer and shall comply with Corps of Engineers manual EM 385-1-1 entitled Safety and Health Requirements Manual. All temporary lines shall be furnished, installed, connected and maintained by the Contractor in a workmanlike manner satisfactory to the Contracting Officer. Before final acceptance of systems, or facilities, all temporary connections installed by the Contractor shall be removed at his expense in a manner satisfactory to the Contracting Officer.

1.11 WORK OUTSIDE REGULAR HOURS

If the Contractor desires to carry on work outside regular base duty hours, or on holidays, including the following U.S. holidays: New Year's Day, Martin Luther King Jr Birthday, President’s Day, Memorial Day, Independence Day, Labor Day, Columbus Day, Veteran's Day, Thanksgiving and Christmas, the Contractor shall submit an application to the Contracting Officer. The Contractor shall allow ample time to enable satisfactory arrangements to be made by the Government for inspecting the work in progress. At night, exterior lighting shall be provided in conformance with EM-385-1-1 entitled "Safety and Health Requirements Manual".

1.12 SCHEDULING OF WORK IN EXISTING FACILITIES

As soon as practicable, but in any event not later than thirty (30) calendar days after award of this contract, the Contractor shall meet in conference with the Contracting Officer, or his duly authorized representatives, to discuss and develop mutual understanding relative to the scheduling of work in and access to the existing facilities where work has to be performed under this contract, so that the Contractor's proposed construction schedule is coordinated with the operating and security requirements of the installation.

1.13 SPECIAL FACILITIES AND SERVICES TO BE FURNISHED BY THE CONTRACTOR

The Contractor shall furnish the facilities and services listed in this clause for Corps of Engineers personnel and other persons as designated by the Contracting Officer. All facilities, furnishings, materials, and equipment shall be new when furnished at the site. The Contractor shall fully maintain and repair all facilities, furnishings and equipment listed below. All facilities, furnishings, materials, and equipment furnished and/or installed by the Contractor under this clause shall remain the property of the Contractor at the completion of the contract. Facility structures shall be modular or containerized, suitable for easy movement at a later date.

1.14 [Not used.]

1.15 CERTIFICATES OF COMPLIANCE

Any certificates required for demonstrating proof of compliance of materials with specification requirements shall be executed in accordance with Section 01335 SUBMITTAL PROCEDURES FOR DESIGN/BUILD. Each certificate shall be signed by an official authorized to certify in behalf of the manufacturing company involved and shall contain the name and address of the Contractor, the project

name and location, description and the quantity of the items involved, and date or dates of shipment or delivery to which the certificates apply. Copies of laboratory test reports submitted with certificates shall contain the name and address of the testing laboratory and the date or dates of the tests to which the report applies. Certification shall not be construed as relieving the Contractor from furnishing satisfactory material.

1.16 ACCIDENT PREVENTION

The Contractor shall comply with all applicable Host Country laws and with such additional measures as the Contracting Officer may find necessary in accordance with CONTRACT CLAUSE 52.236-13 entitled ACCIDENT PREVENTION (NOV1991)-ALTERNATE 1 (APR 1984). Applicable provisions of the Corps of Engineers manual entitled Safety and Health Requirements Manual EM 385-1-1 will be applied to all work under this contract. The referenced manual may be obtained from the Contracting Officer at the jobsite or from the Afghanistan Engineer District at Kabul, Afghanistan.

1.16.1 Accident Prevention Program

Within fifteen (15) days after award of this contract, and at least ten (10) days prior to the accident prevention pre-work conference, four (4) copies of the Accident Prevention Plan required by the CONTRACT CLAUSE 52.236-13 entitled ACCIDENT PREVENTION (NOV 1991)- ALTERNATE I shall be submitted for review by the Contracting Officer. The Contractor shall not commence physical work at the site until the Accident Prevention Plan (APP) has been reviewed and accepted by the Contracting Officer. The APP shall meet the requirements listed in Appendix "A" of EM385-1-1. The program shall include the following: TAC Form 61 “Accident Prevention Program Hazard Analysis (Activity Hazard Analysis)" fully completed and signed by an executive officer of the company in block No. 13. The Activity Hazard Analysis is a method in which those hazards likely to cause a serious injury or fatality are analyzed for each phase of operations. Corrective action is planned in advance, which will eliminate the hazards. An analysis is required for each new phase of work. On large or complex jobs the first phase may be presented in detail with the submittal of the Accident Prevention Plan rather than presenting the complete analysis. If the plan is to be presented in phases, a proposed outline for future phases must be submitted as a part of the initial Accident Prevention Plan submittal. Accident Prevention Plans will be reviewed for timeliness and adequacy at least monthly with a signature sheet signed and dated documenting that these reviews took place. Copy of company policy statement of Accident Prevention and any other guidance as required by EM 385-1-1, Appendix A.

1.16.2 Ground Fault Circuit Interrupter (GFCI) Requirement – Overseas Construction

The Corps of Engineers Health and Safety Manual, EM 385-1-1, section 11.C.05.a. states: "The GFCI device shall be calibrated to trip within the threshold values of 5 ma +/- 1 ma as specified in Underwriters Laboratory (UL) Standard 943." A variance from USACE has been granted allowing 10 ma, in lieu of 5 ma, for overseas activities that use 220 Volts (V)/50 hertz (Hz) electrical power.

1.16.3 Temporary Power - Electrical Distribution Boxes

EM 385-1-1 section 11.A.01.a. states, "All electrical wiring and equipment shall be a type listed by a nationally recognized testing laboratory for the specific application for which it is to be used." This includes temporary electrical distribution boxes. Locally manufactured electrical boxes will not be allowed. Only manufactured electrical distribution boxes that meet the European CE requirements, with 10 ma CE type GFCIs installed shall be allowed.

Contractors shall:

a. Make no modifications that might void any CE or manufacturer certification.

b. Test the installed systems to demonstrate that they operate properly and provide the 10 ma earth leakage protection.

c. Ensure GFCIs will have an integral push-to-test function. The testing shall be performed on a regular basis.

d. Check that proper grounding is checked regularly and flexible cords, connectors, and sockets inspected before each use.

1.17 HAZARDOUS MATERIALS

Should the Contractor encounter asbestos or other hazardous materials, during the construction period of this contract, he shall immediately stop all work activities in the area where the hazardous material is discovered. The Contractor shall then notify the Contracting Officer; identify the area of danger; and not proceed with work in that area until given approval from the Contracting Officer to continue work activities. Hazardous material is considered to be asbestos, explosive devices, toxic waste, or material hazardous to health and safety. The Contractor shall secure the area from daily traffic until it is safe to resume normal activities.

1.18 NOT USED

1.19 OPERATION AND MAINTENANCE (O&M) DATA

1.19.1 General

The requirements contained herein are in addition to all shop drawings submission requirements stated in other sections of the specifications. The Contractor shall include the provisions for all items required under this clause in all purchase orders and sub-contract agreements. Submittals required hereinafter will not relieve the Contractor of any responsibilities under the Warranty of Construction Provisions of this contract or under the various Guarantee Clauses of the Technical Provisions.

1.19.2 Submittals

The Contractor shall submit all items requiring submission of O&M data under this and other sections of these specifications in accordance with Section 01335 SUBMITTAL PROCEDURES FOR DESIGN/BUILD of the specifications.

1.19.3 Operation and Maintenance (O&M) Data

The Contractor shall furnish operation and maintenance manuals for all facilities constructed under this contract. The manuals shall be loose leaf, indexed and shall consist of manufacturer's brochures, manufacturer's operation and maintenance manuals, service and repair manuals, catalogs, service bulletins, instruction charts, diagrams, other information as necessary to support the operation and maintenance of the end items of equipment, assemblies and systems. The O&M manuals must be provided in English and in Dari. Each type of facility (housing, barracks, mosque, etc.) shall be covered by a separate manual (or manuals) consisting of all data pertaining to the equipment and/or systems within that facility. Identical equipment within a single major system shall require only one submittal of data. The Contractor shall furnish all O&M manuals to the Contracting Officer not less than thirty (30) calendar days prior to contract completion. Required number of submittals (number of sets) shall be as specified in Section 01335 SUBMITTAL PROCEDURES FOR DESIGN/BUILD.

1.19.4 Recommended Spare Parts List

The Contractor shall furnish a recommended spare parts list containing equipment manufacturers' recommendations for five (5) years; two (2) years and one (1) year spare parts stock levels in Afghanistan. Current unit price and effective date, lead time, shelf life for each individual part, and total cost of all recommended parts shall be furnished.

1.19.5 Supplemental Submittals of Data

After initial submittal of O&M manuals and until final acceptance of all equipment, the Contractor shall prepare and deliver to the Contracting Officer supplemental technical data as previously described for all changes, modifications, revisions and substitutions to equipment and components. For equipment or systems introduced into the contract under change order, or modified by change order, supplemental data shall be furnished within forty-five (45) calendar days after issuance of the change order. The supplemental data furnished shall be properly prepared and identified for insertion into the O&M manuals.

1.19.6 Framed Instructions for Systems

Approved wiring and control diagrams showing the complete layout of the entire system, including equipment, piping, valves and control sequence, framed under glass or in approved laminated plastic, shall be posted, where applicable, in all mechanical equipment rooms. In addition, detailed operating instructions explaining safe starting and stopping procedures for all systems shall be prepared in typed form along with the inspections required to insure normal safe operations. The instructions shall be framed as specified above for the wiring and control diagrams and posted beside the diagram. Proposed diagrams, instructions, and other sheets shall be submitted for approval prior to posting. Operating instructions shall be posted before acceptance testing of the systems and verified during acceptance testing.

1.19.7 Additional Submittals/Re-submittals

The Contracting Officer reserves the right to determine whether the above specified information, as furnished by the Contractor, is adequate and complete and to require such additional submittals by the Contractor as necessary to insure that adequate information has been furnished to provide the satisfactory operation and maintenance of the various items of equipment and to fulfill the intent of the specifications. Additional submittals or resubmittals supplementing incorrect or incomplete data shall be made within thirty (30) calendar days after receiving notice by the Contracting Officer. All costs arising from these resubmissions shall be borne by the Contractor.

1.20 INSTRUCTIONS AND TRAINING FOR OPERATION AND MAINTENANCE

1.20.1 General

The Contractor shall be responsible for the instruction and training of operating and maintenance personnel as specified below and in the Technical Provisions of the specifications. Unless otherwise indicated in the Technical Provisions, operating and maintenance instructions shall be given for a minimum period as follows:

Title	Duration of Training
Mechanical Systems	10 Days
Electrical Systems	10 Days

1.20.2 Operation and Maintenance Training

The Contractor shall provide competent instructors for training of personnel designated by the Contracting Officer to operate mechanical and electrical building systems and equipment, perform the required preventive maintenance to minimize breakdown, and to perform necessary repairs when malfunction or breakdown of equipment occurs. Such training shall consist of classroom and on-the-equipment training for the period specified which shall be completed prior to acceptance of a system or equipment, as applicable. The instructor(s) shall have no other duties during the period of training. Classroom instruction shall not exceed fifty percent (50%) of the total training time, with the balance devoted to on-the-equipment demonstration and familiarization. Emphasis will be given to both electrical and mechanical features, in accordance with approved training plans.

1.20.3 Arrangements

The training shall be for not less than the periods of time specified, five (5) days per week, and eight (8) hours per day, subject to review and approval by the Contracting Officer. Each individual training session shall be presented one time only, shall be video taped in a television system compatible with the local area, and be scheduled in a manner acceptable to the Contracting Officer. At the completion of training, the videotapes shall become the property of the Government. In addition to the Contractor's requirements to video tape each training section, the Government reserves the right to record, in any manner, the subject training material, or training sessions given by the Contractor, without additional cost to the Government.
Recordings obtained will be used in future training by the Government. The operating and maintenance manual data, as specified to be furnished in these Special Clauses, shall be used as the base material for training.

1.20.4 Scheduling

The Contractor shall contact the Contracting Officer for the purpose of preliminary planning, scheduling, and coordination of training, to maximize effectiveness of the training program for available operating and maintenance personnel. The Contractor shall initiate and make arrangements for such contact within thirty (30) calendar days after receipt of notification of award of contract; and shall include all significant times in scheduling and completing training in his PROJECT SCHEDULE. The Contractor shall provide a draft outline of training outline in sufficient detail to provide a broad indication of the type of scope of training to be given. It shall include but not be limited to; (a) a list of subjects to be presented; (b) estimated amounts of classroom and on-the-equipment instruction for each subject; (c) a list of minimum qualifications for instructors; and (d) discussions concerning the types and amounts of visual aids, reference materials, tools and test equipment, mock-up and other training materials that will be employed during training.

1.20.5 Preliminary Plan

The Contractor shall submit seven (7) copies of an outline of his proposed training plan to the Contracting Officer for review and approval not later than 60 calendar days after award of this contract. The plan will be reviewed and coordinated with the content of the O&M manuals.

1.20.6 Plan

The Contractor shall submit seven (7) copies of his proposed training plan to the Contracting Officer for approval not later than ninety (90) calendar days prior to start of any training. The plan shall include the following; (a) a weekly outline showing overall form and design of training presentation; (b) a day-by-day schedule showing time intervals, the major and subordinate subjects to be covered in each, the name of the instructor(s) and qualification summary of each, and identification of related handouts; (c) summary of the number of hours of classroom and on-the-equipment training; (d) a list of reference materials to be provided by the Contractor to the trainees; and (e) a list and description of the training materials to be used, such as text, visual aids, mock-up, tools, etc. The Contractor shall be responsible for furnishing all training materials except the following: The Government will provide space, chairs, and tables for classroom training, and three (3) sets of the five (5) sets of O&M Manuals required by the Contractor per Section 01335 SUBMITTAL PROCEDURES FOR DESIGN/BUILD of the specifications. Provision of these manuals is solely for reference purposes, and in no way relieves the Contractor from providing all instruction and materials necessary for training personnel designated by the Government. All costs for resubmission of training plans, training materials, etc., as requested by the Contracting Officer shall be borne by the Contractor. Resubmittals shall be made within twenty (20) days of notice from the Contracting Officer.

1.20.7 Attendance Roster/TAC Form 356

The Contractor shall develop an attendance roster or a similar document indicating each student's attendance, prior to the start of each class, subject and/or topic. This includes both "Hands-On" and classroom training. It is strongly recommended that each student trained be required to sign this document at the beginning of each class day for each and every class, subject and/or topic taught on that day. The Contractor's failure to have student attendance verified in writing may be cause for the Government to order the Contractor to repeat schooling where evidence of attendance cannot be verified. No part of the time lost due to such repeat instruction shall be made the subject of claim for extension of time or for excess costs or damage by the Contractor. Within ten (10) working days after completion of Operation and Maintenance Training conducted in accordance with this clause and/or applicable Technical Provision section, the Contractor shall complete and submit TAC Form 356 "Operation and Maintenance Training Validation Certificate". The attendance roster shall be included as an attachment to TAC Form 356.

1.21 CONTRACTOR FURNISHED EQUIPMENT LISTS

The Contractor shall furnish a list of all items, other than integral construction type items, furnished under the contract. Items such as furniture, drapes, rugs, vehicles, office machines, appliances, etc., shall fall under this category. The Contractor's list shall describe the item; give the unit price and total quantities of each. Model and serial numbers for equipment shall be provided when applicable. The Contractor shall keep an up-to-date register of all covered items and make this information available to the Contracting Officer at all times. Prior to acceptance, the Contractor shall submit the complete register to the Contracting Officer.

1.22 TIME EXTENSIONS

1.22.1 General

This provision specifies the procedure for determination of time extensions for unusually severe weather in accordance with the Contract Clause 52.249-10 entitled DEFAULT (FIXED-PRICE CONSTRUCTION) APR 1984. The listing below defines the anticipated monthly unusually severe weather for the contract period and is based on National Oceanic and Atmospheric Administration (NOAA) or similar data for the geographic location of the project. The schedule of anticipated unusually severe weather will constitute the baseline for determining monthly weather time evaluations. Upon award of this contract and continuing throughout the contract each month, actual unusually severe weather days will be recorded on a calendar day basis (including weekends and holidays) and compared to the monthly anticipated unusually severe weather in the schedule below. The term "actual unusually severe weather days" shall include days actually impacted by unusually severe weather. The Contractor's schedule must reflect the anticipated unusually severe weather days on all weather dependent activities.

MONTHLY ANTICIPATED UNUSUALLY SEVERE WEATHER CALENDAR DAYS

January	6 Days
February	3 Days
March	2 Days
April thru December	2 Days

1.22.2 Time Extensions

1.22.2.1 Weather

The number of actual unusually severe weather days shall be calculated chronologically from the first to the last day in each month. Unusually severe weather days must prevent work for fifty percent (50%) or more of the Contractor's workday and delay work critical to the timely completion of the project. If the number of actual unusually severe weather days exceeds the number of days anticipated in the paragraph above, the Contracting Officer will determine whether the Contractor is entitled to a time

extension. The Contracting Officer will convert any qualifying delays to calendar days and issue a modification in accordance with the Contract Clause 52.249-10 entitled DEFAULT (FIXED-PRICE CONSTRUCTION) APR 1984.

1.22.2.2 Other Delays

Construction delays due to full or partial base closures due to incidents such as demonstrations, civil unrest and outright attacks will be examined on an individual basis for consideration of time extensions.

1.23 STANDARDIZATION

Where two or more items of the same type or class of product, system or equipment furnished in this project are required, the units shall be products of the same manufacturer and shall be interchangeable when of the same size, capacity, performance characteristics, and rating. The only exception to this requirement is where the items are interchangeable due to conformance with industry standards (valves, fittings, etc.); they need not be by the same manufacturer. This requirement applies to all manufactured items in the project that normally require repair or replacement during the life of the equipment.

1.24 COMPLIANCE WITH HOST COUNTRY RULES AND CUSTOMS

The laws of Host Country may prohibit access to certain areas of the country that are under military control. The Contractor shall furnish the Contracting Officer the names of personnel, type, and amounts of equipment, dates and length of time required at the site, and the purpose of entering the host country. It is understood that areas to which rights of entry are provided by the Host Government are to be used only for work carried out under the contract and no destruction or damages shall be caused, except through normal usage, without concurrence of the Host Government.

1.24.1 Contractor's Responsibilities

The following items are the sole responsibility of the Contractor to investigate, estimate as to cost, and assume the risk, as normally encountered by Contractors. The Contractor shall be responsible for determining the effect of the following on his own cost of performance of the contract and for including sufficient amount in the contract price:

a. Official language and type of accounts required to satisfy the officials of the Local Government.

b. Entry and exit visas, residence permits, and residence laws applicable to aliens. This includes any special requirements of the Host Government, including those required by local Labor Offices, which the Contractor may have to fulfill before an application for a regular block of visas will be accepted.

c. Passports, health and immunization certificates, and quarantine clearance.

d. Compliance with local labor and insurance laws, including payment of employer's share of contribution, collecting balance from employee and paying into insurance funds.

e. Strikes, demonstrations and work stoppage.

f. Collection through withholding and payment to local Government, of any Host Country income tax on employees subject to tax.

g. Arranging to perform work in the Host Country, to import personnel, to employ non-indigenous labor, to receive payments and to remove such funds from the country.

h. Operating under local laws, practices, customs and controls, and with local unions, in connection with hiring and firing, mandatory wage scales, vacation pay, severance pay, overtime, holiday pay, 7th day of

rest, legal notice or pay in lieu thereof for dismissal of employees, slowdown and curtailed schedules during religious holidays and ratio of local labor employed in comparison to others.

i. Possibility of claims in local bureaus, litigation in local courts, or attachment of local bank accounts.

j. Compliance with workmen's compensation laws and contributions into funds. Provisions of necessary medical service for Contractor employees.

k. Special license required by the local Government for setting up and operating any manufacturing plant in the Host Country, e.g. concrete batching, precast concrete, concrete blocks, etc.

l. Sales within the host country of Contractor-owned materials, and equipment.

m. Special licenses for physicians, mechanics, tradesmen, drivers, etc.

n. Identification and/or registration with local police of imported personnel.

o. Stamp tax on documents, payments and payrolls.

p. Base passes for permanent staff, day laborers, motor vehicles, etc.

q. Compliance with all customs and import rules, regulations and restrictions, including, but not limited to, local purchase requirements.

1.25 Not used.

1.25.1 Employee Identification

The Contractor shall be responsible for furnishing to each employee and for requiring each employee engaged on the work, to display identification as approved and directed by the Contracting Officer. Prescribed identification shall immediately be delivered to the Contracting Officer for cancellation upon release of any employee. When required, the Contractor shall obtain and provide fingerprints of persons employed on the project. Contractor and subcontractor personnel shall wear identifying markings on hard hats clearly identifying the company for whom the employee works.

1.25.1.1 Preparation of Identification Badges

The Contractor shall be required to prepare a written application inclusive color photographs and provide all materials and labor necessary to prepare an identification badge, laminated in plastic, containing the employee's name, badge number, color photo, height and weight, the name of the Contractor's organization and for requiring each employee engaged on the work to display this identification as directed by the Contracting Officer. The Contractor shall submit each application and draft badge through the Contracting Officer to the Base Security Office. A minimum of thirty-five workdays shall be allowed for Government review and certification of badges. The Base Security Office will certify each draft badge by signature, stamp, seal or any combination thereof. Upon certification by the Base Security Office, the badges will be returned to the Contractor for final preparation, lamination, and issuance. Badges shall not be taken out of country during periods of travel or absence. During such periods, the Contractor may be permitted to issue temporary identification badges.

1.25.1.2 Employee Background and Historical Information

The Contractor shall be required to prepare and maintain personal background and historical information forms on each employee. These forms may be reviewed by the Base Security Office. The required information shall include but not necessarily be limited to the following:

a. Full name.

b. Place and date of birth.
c. Three (3) current color photographs.
d. Copy of Citizenship/Nationality identification.
e. Copy of Passport.
f. Copy of drivers license.
g. Police Background Check.
h. Work History.
i. Personal background information.
j. Copy of Work Permit and/or Visa.
k. Permanent home of record and in-country address.
l. Other information mandated by local law, the Base Security Regulations or that may be required to coordinate and process the necessary documentation with the government offices responsible for the approval.
n. Registration, insurance company, policy number and expiration date for each vehicle.

1.25.2 Identification of Contractor Vehicles

The Contractor shall be responsible for requiring each vehicle engaged in the work to display permanent vehicular identification as approved and directed by the Contracting Officer. If acceptable to the Base Security Office and approved by the Contracting Officer, the Contractor may institute a system of non-permanent temporary identification for one-time delivery and transit vehicles. Each Contractor vehicle, machine, piece of equipment, or towed trailers, shall show the Contractor's name such that it is clearly visible on both front doors of the vehicle and both sides of a towed trailer. A valid license plate shall be displayed at all times. Contractor vehicles operated on Government property shall be maintained in a good state of repair, shall be insured, and shall be registered in accordance with Afghan Law.

1.25.3 Security Plan

The Contractor shall submit to the Contracting Officer, within ten (10) calendar days after award of this contract, his proposed personnel and vehicular access plan. This plan shall cover all elements for issuance of the access passes, safeguarding of passes not issued, construction security operations, lost passes, temporary vehicle passes, and collection of passes for employee's and vehicles on 1)- temporary absence; 2)- termination or release; and 3)- termination or completion of contract. The plan shall address in detail the contractors proposed procedures, and organization necessary to produce and maintain effective security within the contract limits twenty-four (24) hours a day seven (7) days a week.

1.26 RADIO TRANSMITTER RESTRICTIONS

To preclude accidental actuation of sensitive electronic equipment, the Contractor shall not use radio-transmitting equipment without prior approval of the Contracting Officer.

1.27 Not used.

1.28 PUBLIC RELEASE OF INFORMATION

1.28.1 Prohibition

There shall be no public release of information or photographs concerning any aspect of the materials or services relating to this bid, contract, purchase order, or other documents resulting there from without the prior written approval of the Contracting Officer.

1.28.2 Subcontract and Purchase Orders

The Contractor agrees to insert the substance of this clause in all purchase orders and subcontract agreements issued under this contract.

1.29 ATTACHMENTS

TAC FORM 61 - Accident Prevention Program Hazard Analysis

TAC FORM 356 - Operation and Maintenance Training Validation Certificate

PART 2 LOCAL CLAUSES

2.1 APPLICATION OF US CRIMINAL JURISDICTION

Reference DODI 5525.11. The contractor is directed to provide all of its personnel working under this contract, and to require all of its subcontractors to provide their personnel, with written notification that - with the exception of nationals of Afghanistan and those ordinarily resident in Afghanistan - contractor and subcontractor personnel, and the dependents of contractor and subcontractor personnel who are residing with such personnel, may be subject to US criminal jurisdiction as provided for in the Military Extraterritorial Jurisdiction Act, 18 USC 3261-3267; see Section 3267(1)(A)(iii)(I) and (2)(A)(iii). A copy of the notice ***shall be furnished to the contracting officer upon award of the contract***, along with a certification by an authorized company representative attesting to the provision of the notification to contractor personnel.

2.2 ATTACKS FROM HOSTILE ENTITIES

This contract is firm fixed-price. Costs incurred in the performance of project execution that arise from the attacks of hostile entities, such as costs arising from damage to or destruction of contractor equipment and facilities, and damage to or destruction of the project prior to Government acceptance, are the sole responsibility of the contractor. The Government makes no guarantee to provide the contractor with security, and bears no obligation to reimburse the contractor for costs arising from the attacks of hostile entities. When appropriate, the Contracting Officer may provide the contractor with an equitable adjustment with respect to time – but not cost – in accordance with clause 52.249-10; see 52.249-10(b)(1)(i) and (2).

2.3 INSTALLATION ACCESS AND BADGING

This contract is firm fixed-price. It is the responsibility of the contractor to be knowledgeable of and to abide by any and all applicable installation access procedures and requirements, to include any and all badging procedures and requirements that may be necessary for contractor access to the project site. Such procedures and requirements may change over the course of contract performance; it is the responsibility of the contractor to plan accordingly in order to meet its existing obligations under this contract. The US Army Corps of Engineers, Afghanistan Engineer District, neither controls nor is responsible for any such installation access procedures, requirements or changes thereto.

2.4 CUSTOMS CLEARANCE

Reference clauses 52.229-6 and 52.225-13. This contract is firm fixed-price. It is the responsibility of the contractor to be knowledgeable of and to abide by any and all applicable customs clearance procedures and requirements that may be necessary for the transportation of supplies and equipment into Afghanistan. Such procedures and requirements may change over the course of contract performance; it is the responsibility of the contractor to plan accordingly in order to meet its existing obligations under this contract. The US Army Corps of Engineers, Afghanistan Engineer District, neither controls nor is responsible for any such customs clearance procedures, requirements or changes thereto.

2.5 TRAVEL WARNINGS

The contractor shall provide all personnel working under this contract, and shall require subcontractors to provide their personnel, with a written notification advising such personnel to be aware of US State Department Travel Warnings with respect to Afghanistan, available at http://travel.state.gov, in the event they wish to consider bringing their dependants into Afghanistan. A copy of the notice ***shall be furnished to the contracting officer upon award of the contract***, along with a certification by an authorized company representative attesting to the provision of the notification to contractor personnel. At no time, subject to the written approval of the contracting officer, may the contractor allow such dependants, or any other unauthorized individuals, to be present on the project site grounds, whether in transit or otherwise.

2.6 DRUG-FREE WORKFORCE

Documentation of the contractor's drug-free workforce program as required by clause 252.223-7004(b) ***shall be furnished to the contracting officer upon award of the contract***.

2.7 COMBATING TRAFFICKING IN PERSONS, COMMERCIAL SEX ACTS, FORCED LABOR

A copy of the employee notification statement as required by clause 252.222-7006(d) ***shall be furnished to the contracting officer upon award of the contract***, along with a certification by an authorized company representative attesting to the provision of the notification to contractor personnel.

2.8 AGENT'S FEE AND COMMISSION

The contractor certifies that the contract price (including any subcontracts awarded hereunder) does not include any direct or indirect costs of sales commissions or fees for contractor sales representatives for the solicitation or promotion or otherwise to secure the conclusion of the sale of any of the supplies or services called for by this contract to the Government of Afghanistan.

-- End of Section --

SECTION 01312

SECTION 01312

QUALITY CONTROL SYSTEM (QCS)

PART 1: GENERAL

1.1 GENERAL

The Government will use the Resident Management System for Windows (RMS) to assist in its monitoring and administration of this contract. The Contractor shall use the Government-furnished Construction Contractor Module of RMS, referred to as QCS, to record, maintain, and submit various information throughout the contract period. The Contractor module, user manuals, updates, and training information can be downloaded from the RMS web site: the Contractor can obtain the current address from the Government. This joint Government-Contractor use of RMS and QCS will facilitate electronic exchange of information and overall management of the contract. QCS provides the means for the Contractor to input, track, and electronically share information with the Government in the following areas:

Administration
Finances
Quality Control
Submittal Monitoring
Scheduling
Import/Export of Data

1.1.1 Correspondence and Electronic Communications

For ease and speed of communications, both Government and Contractor will, to the maximum extent feasible, exchange correspondence and other documents in electronic format. Correspondence, pay requests and other documents comprising the official contract record shall also be provided in paper format, with signatures and dates where necessary. Paper documents will govern, in the event of discrepancy with the electronic version.

1.1.2 Other Factors

Particular attention is directed to specifications “SUBMITTAL PROCEDURES”, “CONTRACTOR QUALITY CONTROL”, "PROJECT SCHEDULE", and Contract Clause, "Payments", which have a direct relationship to the reporting to be accomplished through QCS. Also, there is no separate payment for establishing and maintaining the QCS database; all costs associated therewith shall be included in the contract pricing for the work.

1.2 QCS SOFTWARE

QCS is a Windows-based program that can be run on a stand-alone personal computer or on a network. Prior to the Pre-Construction Conference, the Contractor shall be responsible to download, install and use the latest version of the QCS software from the Government's RMS Internet Website. Any program updates of QCS will be made available to the Contractor via the Government RMS Website as they become available. It shall be the responsibility of the contractor to maintain the QCS software and install updates as they become available.

1.3 SYSTEM REQUIREMENTS

The following listed hardware and software is the minimum system configuration that the Contractor shall have to run QCS. No separate payment shall be made for updating or maintaining the necessary hardware configurations necessary to run QCS:

Hardware

IBM-compatible PC with 1000 MHz Pentium or higher processor
256+ MB RAM for workstation / 512+ MB RAM for server
1 GB hard drive disk space for sole use by the QCS system
Digital Video Disk (DVD)-Compact Disk (CD) Reader-Writer (RW/ROM)
Monitor with a resolution of AT LEAST 1024x768, 16bit colors
Mouse or other pointing device
Windows compatible printer. (Laser printer must have 4 MB+ of RAM)
Connection to the Internet, minimum 56k BPS

Software

MS Windows 2000 or higher
QAS-Word Processing software: MS Word 2000 or newer
Internet browser supporting HTML 4.0 or higher
Electronic mail (E-mail) MAPI compatible
Virus protection software regularly upgraded with all issued manufacturer's updates

1.4 RELATED INFORMATION

1.4.1 QCS User Guide

After contract award, the Contractor shall download instructions for the installation and use of QCS from the Government RMS Internet Website; the Contractor can obtain the current address from the Government. In case of justifiable difficulties, the Government will provide the Contractor with a CD-ROM containing these instructions.

1.4.2 Contractor Quality Control (CQC) Training

The use of QCS will be discussed with the Contractor's QC System Manager during the mandatory CQC Training class. The government will provide QCS training if requested by the contractor.

1.5 CONTRACT DATABASE

Prior to the pre-construction conference, the Government shall provide the Contractor with basic contract award data to use for QCS. The Government will provide data updates to the Contractor as needed, generally by files attached to E-mail or via CD-ROM. These updates will generally consist of submittal reviews, correspondence status, QA comments, and other administrative and QA data.

1.6 DATABASE MAINTENANCE

The Contractor shall establish, maintain, and update data for the contract in the QCS database throughout the duration of the contract. Data updates to the Government shall be submitted via either E-mail or electronic media with printed/file attachments, e.g., daily reports, schedule updates, payment requests. If permitted by the Contracting Officer. The QCS database typically shall include current data on the following items:

1.6.1 Administration

1.6.1.1 Contractor Information

The database shall contain the Contractor's name, address, telephone numbers, management staff, and other required items. Within 14 calendar days of receipt of QCS software from the Government, the Contractor shall deliver Contractor administrative data in electronic format via E-mail.

1.6.1.2 Subcontractor Information

The database shall contain the name, trade, address, phone numbers, and other required information for all subcontractors. A subcontractor must be listed separately for each trade to be performed. Each subcontractor/trade shall be assigned a unique Responsibility Code, provided in QCS. Within 14 calendar days of receipt of QCS software from the Government, the Contractor shall deliver subcontractor administrative data in electronic format via E-mail.

1.6.1.3 Correspondence

All Contractor correspondence to the Government shall be identified with a serial number. Correspondence initiated by the Contractor's site office shall be prefixed with "S". Letters initiated by the Contractor's home (main) office shall be prefixed with "H". Letters shall be numbered starting from 0001. (e.g., H-0001 or S-0001). The Government's letters to the Contractor will be prefixed with "C".

1.6.1.4 Equipment

The Contractor's QCS database shall contain a current list of equipment planned for use or being used on the jobsite, including the most recent and planned equipment inspection dates.

1.6.1.5 Management Reporting

QCS includes a number of reports that Contractor management can use to track the status of the project. The value of these reports is reflective of the quality of the data input, and is maintained in the various sections of QCS. Among these reports are: Progress Payment Request worksheet, QA/QC comments, Submittal Register Status, Three-Phase Inspection checklists.

1.6.2 Finances

1.6.2.1 Pay Activity Data

The QCS database shall include a list of pay activities that the Contractor shall develop in conjunction with the construction schedule. The sum of all pay activities shall be equal to the total contract amount, including modifications. Pay activities shall be grouped by Contract Line Item Number (CLIN), and the sum of the activities shall equal the amount of each CLIN. The total of all CLINs equals the Contract Amount.

1.6.2.2 Payment Requests

All progress payment requests shall be prepared using QCS. The Contractor shall complete the payment request worksheet and include it with the payment request. The work completed under the contract, measured as percent or as specific quantities, shall be updated at least monthly. After the update, the Contractor shall generate a payment request report using QCS. A signed paper copy of the approved payment request is also required, which shall govern in the event of discrepancy with the electronic version.

1.6.3 Quality Control (QC)

QCS provides a means to track implementation of the 3-phase QC Control System, prepare daily reports, identify and track deficiencies, document progress of work, and support other contractor QC requirements. The Contractor shall maintain this data on a daily basis. Entered data will automatically output to the QCS generated daily report.

1.6.3.1 Daily Contractor Quality Control (CQC) Reports.

QCS includes the means to produce the Daily CQC Report. The Daily CQC Report generated by QCS shall be the Contractor's official report. Data from any supplemental reports by the Contractor shall be summarized and consolidated onto the QCS-generated Daily CQC Report. Daily CQC Reports shall be submitted as required by specification 01451 “CONTRACTOR QUALITY CONTROL”.

1.6.3.2 Deficiency Tracking.

The Contractor shall use QCS to track deficiencies. Deficiencies identified by the Contractor will be numerically tracked using QC punch list items. The Contractor shall maintain a current log of its QC punch list items in the QCS database. The Government will log the deficiencies it has identified using its QA punch list items. The Government's QA punch list items will be included in its export file to the Contractor. The Contractor shall regularly update the correction status of both QC and QA punch list items.

1.6.3.3 Three-Phase Control Meetings

The Contractor shall maintain scheduled and actual dates and times of preparatory and initial control meetings in QCS.

1.6.3.4 Accident/Safety Tracking.

The Government will issue safety comments, directions, or guidance whenever safety deficiencies are observed. The Government's safety comments will be included in its export file to the Contractor. The Contractor shall regularly update the correction status of the safety comments. In addition, the Contractor shall utilize QCS to advise the Government of any accidents occurring on the jobsite. This brief supplemental entry is not to be considered as a substitute for completion of mandatory reports.

1.6.3.5 Features of Work

The Contractor shall include a complete list of the features of work in the QCS database. A feature of work may be associated with multiple pay activities. However, each pay activity (see subparagraph "Pay Activity Data" of paragraph "Finances") will only be linked to a single feature of work.

1.6.3.6 QC Requirements

The Contractor shall develop and maintain a complete list of QC testing, transferred and installed property, and user training requirements in QCS. The Contractor shall update all data on these QC requirements as work progresses, and shall promptly provide this information to the Government via QCS.

1.6.4 Submittal Management

The Contractor shall maintain a complete list of all submittals, including completion of all data columns. Dates on which submittals are received and returned by the Government will be included in its export file to the Contractor. The Contractor shall use QCS to track and transmit all submittals. ENG Form 4025, submittal transmittal form, and the submittal register update, ENG Form 4288, shall be produced using QCS. RMS will be used to update, store and exchange submittal registers and transmittals, but will not be used for storage of actual submittals.

1.6.5 Schedule

The Contractor shall develop a construction schedule consisting of pay activities, in accordance with Specification Section Project Schedule. This schedule shall be input and maintained in the QCS database either manually or by using the Standard Data Exchange Format (SDEF). The updated schedule data shall be included with each pay request submitted by the Contractor.

1.6.6 Requests for Information (RFI)

The Contractor shall use the two-way RFI system contained in QCS for tracking all RFI’s generated during the contract. Hard copies of all RFI’s shall be provided to the government, and will govern in the event of a discrepancy between electronic and printed mediums.

1.6.7 Import/Export of Data

QCS includes the ability to export Contractor data to the Government and to import submittal register and other Government-provided data, and schedule data using SDEF.

1.7 IMPLEMENTATION

Contractor use of QCS as described in the preceding paragraphs is mandatory. The Contractor shall ensure that sufficient resources are available to maintain its QCS database, and to provide the Government with regular database updates. QCS shall be an integral part of the Contractor's management of quality control.

1.8 DATA SUBMISSION VIA COMPUTER DISKETTE OR CD-ROM

The Government-preferred method for Contractor's submission of updates, payment requests, correspondence and other data is by E-mail with file attachment(s). For locations where this is not feasible, the Contracting Officer may permit use of computer diskettes or CD-ROM for data transfer. Data on the disks or CDs shall be exported using the QCS built-in export function.

1.9 MONTHLY COORDINATION MEETING

The Contractor shall update the QCS database each workday. At least monthly, the Contractor shall generate and submit an export file to the Government with schedule update and progress payment request. As required in Contract Clause "Payments", at least one week prior to submittal, the Contractor shall meet with the Government representative to review the planned progress payment data submission for errors and omissions. The Contractor shall make all required corrections prior to Government acceptance of the export file and progress payment request. Payment requests accompanied by incomplete or incorrect data submittals will be returned. The Government will not process progress payments until an acceptable QCS export file is received.

1.10 NOTIFICATION OF NONCOMPLIANCE

The Contracting Officer will notify the Contractor of any detected noncompliance with the requirements of this specification. The Contractor shall take immediate corrective action after receipt of such notice. Such notice, when delivered to the Contractor at the work site, shall be deemed sufficient for the purpose of notification.

-- End of Section --

SECTION 01321

SECTION 01321

PROJECT SCHEDULE

PART 1 GENERAL

1.1 SUBMITTALS

The following shall be submitted for Government approval in accordance with Section 01335 SUBMITTAL PROCEDURES: SD-07 Schedules Project Schedule; Horizontal Bar Chart and Periodic Payment Request Updates; and Projected Earnings Curve and Periodic Payment Request Updates. Revisions to the Project Schedule and Projected Earnings Curve for Modifications Issued to this Contract shall be coordinated with the Contracting Officer.

PART 2 PRODUCTS (Not Applicable)

PART 3 EXECUTION

3.1 GENERAL

The Contractor shall furnish a Project Schedule as described below. The scheduling of construction shall be the responsibility of the Contractor. Contractor management personnel shall actively participate in its development. Subcontractors and suppliers working on the project should also contribute in developing and maintaining an accurate Project Schedule. The approved Project Schedule shall be used to measure the progress of the work, to aid in evaluating time extensions, and to provide the basis of all progress payments.

3.2 BASIS FOR PAYMENT

The schedule shall be the basis for measuring Contractor progress. Lack of an approved schedule or scheduling personnel shall result in an inability of the Contracting Officer to evaluate Contractor progress for the purposes of payment. Failure of the Contractor to provide all information, as specified below, shall result in the disapproval of the entire Project Schedule submission and the inability of the Contracting Officer to evaluate Contractor progress for payment purposes. In the case where Project Schedule revisions have been directed by the Contracting Officer and those revisions have not been included in the Project Schedule, then the Contracting Officer may hold

retainage up to the maximum allowed by contract, each payment period, until revisions to the Project Schedule have been made.

3.3 PROJECT SCHEDULE

3.3.1 Schedule of Construction

Within seven (7) calendar days after notice to proceed, the Contractor shall prepare and submit a Construction Schedule to the Contracting Officer for approval. This schedule shall address each payment line item and/or sub-line item listed in the Proposal Schedule separately.

3.3.2 Non-Compliance

Failure of the Contractor to comply with the requirements of the Contracting Officer shall be grounds for determination by the Contracting Officer that the Contractor is not prosecuting the work with sufficient diligence to ensure completion within the time specified in the contract. Upon making this determination, the Contracting Officer may terminate the Contractor's right to proceed with the work, or any separable part of it, in accordance with the default terms of this contract.

3.3.3 Horizontal Bar Chart

The required schedule shall utilize an automated scheduling program and shall be in the form of a horizontal bar chart. The line or sub-line item schedule of activities shall be listed down the left side of the page. A time scale shall run across the bottom of the page. Each work item shall be represented by a bar starting with the schedule start date and running continuously to the completion date.

3.3.4 Cost

Listed with each work item shall be a corresponding cost representing the total cost, such as material, labor, equipment, and overhead associated with that item. The total cost of the work items shall be equal to the Bid Price for that sub-line item of the Proposal Schedule.

3.3.5 Scheduled Project Completion

The schedule interval shall extend from Notice-To-Proceed to the contract completion date.

3.3.6 Projected Earning Curve

Submitted with the Construction Schedule shall be a Projected Earning Curve. The Projected Earning Curve is a plot of the Contractor's earnings on the vertical axis and the contract duration on the horizontal axis. The earnings figure shall relate to the complete value of the contract and need not reflect each facility separately.

3.3.7 Construction Schedule

The Construction Schedule shall be on one page with a maximum dimension of 90 cm by 120 cm. The Contractor shall submit the Projected Earnings Curve on the same page. The initial submittal shall include one (1) reproducible and four (4) copies, one (1) copy of which will be returned to the Contractor when approved.

3.3.8 Submission With Partial Payment Estimate

Each time the Contractor submits a payment request under this contract he shall also submit three (3) copies of the Bar Chart. The Bar Chart shall be annotated by indicating the percent complete for each activity directly on the bar. The Projected Earnings Curve shall be annotated by plotting actual earnings versus time on the same graph. Those work items reflecting performance which is behind schedule by fifteen (15) calendar days or more shall be fully explained in detail giving the reason for delay and the Contractor's plan for timely completion within the schedule.

3.3.9 Modifications

The Construction Schedule and Projected Earning Curve shall be revised to reflect any and all modifications issued to this contract as they are issued. Format and numbers of copies as defined in paragraph CONSTRUCTION SCHEDULE shall be submitted for approval by the Contracting Officer.

3.4 PERIODIC PROGRESS MEETINGS

Progress meetings to discuss payment shall include a monthly on-site meeting or shall be conducted at other regular intervals mutually agreed to at the preconstruction conference. During this meeting the Contractor shall describe, on an activity-by-activity basis, all proposed revisions and adjustments to the project schedule required to reflect the current status of the project. The Contracting Officer will approve activity progress, proposed revisions, and adjustments as appropriate.

3.4.1 Update Submission Following Progress Meeting

A complete update of the project schedule containing all approved progress, revisions, and adjustments, based on the regular progress meeting, shall be submitted not later than four (4) working days after the monthly progress meeting.

3.4.2 Progress Meeting Contents

Update information, including Actual Start Dates, Actual Finish Dates, Remaining Durations, and Cost to Date, shall be subject to the approval of the Contracting Officer.

3.4.3 Earnings Report

A compilation of the Contractor's Total Earnings on the project from the Notice-to-Proceed until the most recent Monthly Progress Meeting shall be recorded. This report shall reflect the Earnings of specific activities based on the agreements made in the field and approved between the Contractor and the Contracting Officer at the most recent Monthly Progress Meeting. Provided that the Contractor has provided a complete schedule update, this report shall serve as the basis of determining Contractor Payment. This report shall: sum all activities and provide a percent complete by individual activity and total project percent complete. The report shall contain, for each activity: activity identification, activity description, original budgeted amount, total quantity, quantity to date, percent complete (based on cost), and earnings to date.

3.4.4 Cost Completion

The earnings for each activity started shall be reviewed. Payment shall be based on earnings for each in-progress or completed activity. Payment for individual activities shall not be made for work that contains quality defects. A portion of the overall project amount may be retained based on delays of activities.

3.4.5 Network Analysis System

The Contractor may, as an option, submit to the Contracting Officer for approval, a time related network analysis in lieu of the previously specified bar chart.

-- End of Section --

SECTION 01335

SUBMITTAL PROCEDURES FOR DESIGN-BUILD PROJECTS

PART 1 GENERAL

1.1 REFERENCE

The publication listed below forms a part of this specification to the extent referenced. The publication is referenced to in the text by basic designation only.

CONSTRUCTION SPECIFICATIONS INSTITUTE

Manual of Practice
Construction Specifications Institute
http://www.csinet.org/s_csi/index.asp
601 Madison Street
Alexandria, Virginia
22314-1791

NATIONAL INSTITUTE OF BUILDING SCIENCES (NIBS)

Unified Master Reference List (UMRL)
National Institute of Building Sciences
1090 Vermont Avenue, NW, Suite 700
Washington, DC 20005-4905
Email: nibs@nibs.org
FAX: (202) 289-1092
Tele: (202) 289-7800

AFGHANISTAN ENGINEER DISTRICT

AFGHANISTAN ENGINEER DISTRICT
http://www.aed.usace.army.mil
U.S. Army Corps of Engineers
Attn.: Qalaa House
APO AE 09356

TRANSATLANTIC PROGRAMS CENTER

Design Instructions Manual

U.S. Army Corps of Engineers
http://www.tac.usace.army.mil/extranet/

Transatlantic Programs Center
201 Prince Frederick Drive
Winchester, Virginia 22602

1.2 SUBMITTAL CLASSIFICATION

Submittals are classified as follows:

1.2.1 DESIGN SUBMITTALS

Contractor Furnished design submittals are the various design documents which primarily consist of specifications, drawings and design analysis and calculations. The Design-Build Contractor shall not begin construction work until the Government has reviewed the Design-Build Contractor's final design and has cleared it for construction. Clearance for construction shall not be construed as meaning Government approval. Unless otherwise indicated, the risk for the design is the sole responsibility of the Design-Build Contractor.

As a minimum, design submittals shall be submitted at the following intervals:

Concept design (35%): In addition to submission requirements, a design analysis/basis of design shall be required, including a proposed listing of specification sections.

Final (100%): In addition to submission requirements, a final draft of specifications and design analysis/basis of design shall be required.

Minimum submission requirements for each phase submittal shall be as defined herein.

1.2.2 CONSTRUCTION SUBMITTALS

1.2.2.1 Contractor Furnished Government Approved Construction Submittals

Government approved construction submittals are primarily related to plans (Contractor Quality Control, Accident Prevention, Resident Management System, Area Use, etc.) schedules (Project Schedule/Network Analysis), and certificates of compliance. They may also include proposed variations to approved design documents in accordance with the paragraph entitled "VARIATIONS".

1.2.2.2 For Information Only Construction Submittals (FIO)

All submittals not requiring Designer of Record or Government approval will be for information only.

1.3 SUBMITTAL CERTIFICATION

The CQC organization shall be responsible for certifying that all submittals and deliverables have been reviewed in detail for completeness, are correct, and are in strict conformance with the contract drawings, specifications, and reference documents.

1.3.1 Effective Quality Control System

The Design-Build Contractor is responsible for quality control and shall establish and maintain an effective quality control system in compliance with Contract Clause 52.236-21 SPECIFICATIONS AND DRAWINGS FOR CONSTRUCTION - ALTERNATE I and specification section 01451 CONTRACTOR QUALITY CONTROL.

1.3.1.1 Organizational Responsibility

The quality control system shall cover all design, construction, subcontractor, manufacturer, vendor, and supplier operations at any tier, both onsite and offsite.

1.3.1.2 CQC System Manager Review and Approval

Prior to submittal, all items shall be checked and approved by the Design-Build Contractor's Quality Control (CQC) System Manager. If found to be in strict conformance with the contract requirement, each item shall be stamped, signed, and dated by the CQC System Manager. Copies of the CQC organizations review comments indicating action taken shall be included within each submittal.

1.3.1.3 Determination of Compliance

Each submittal shall be complete and in sufficient detail to allow ready determination of compliance with contract requirements by the Contracting Officer. The contractor shall submit all required documentation with submittals. The U.S. Army Corps of Engineer (USACE) will not accept partial submittals.

1.3.2 Responsibility for Errors or Omissions

It is the sole responsibility of the Design-Build Contractor to ensure that submittals do or do not comply with the contract documents. Government review, clearance for construction, or approval by the Contracting Officer shall not relieve the Design-Build Contractor from responsibility for any errors or omissions in such drawings, nor from responsibility for complying with the requirements of this contract.

1.3.2.1 Government Review

Government review, clearance for construction, or approval of post design construction submittals shall not be construed as a complete check, but will indicate only that the general method of construction, materials, detailing and other information are satisfactory.

1.3.3 Substitutions

After design submittals have been reviewed and cleared for construction by the Contracting Officer, no resubmittal for the purpose of substituting materials or equipment will be considered unless justified as indicated in the paragraph entitled VARIATIONS.

1.3.4 Additional Submittals

In conjunction with Contract Clause 52.236-5 MATERIAL AND WORKMANSHIP. The Contracting Officer may request submittals in addition to those specified when deemed necessary to adequately describe the work.

1.3.5 Untimely and Unacceptable Submittals

If the Design-Build Contractor fails to submit submittals in a timely fashion, or repetitively submits submittals that are incomplete or not in strict conformance with the contract documents, no part of the time lost due to such actions shall be made the subject of claim for extension of time or for excess costs or damages by the Design-Build Contractor.

1.3.6 Stamps

Stamps shall be used by the Design-Build Contractor on all design and post design construction submittals to certify that the submittal meets contract requirements and shall be similar to the following:

Design-Build Contractor (Firm Name)
Contract Number
Contract Name

I certify that this submittal accurate, is in strict conformance with all contract requirements, has been thoroughly coordinated and cross checked against all other applicable disciplines to prevent the omission of vital information, that all conflicts have been resolved, and that repetition has been avoided and, it is complete and in sufficient detail to allow ready determination of compliance with contract requirements by the Contracting Officer.

Name of CQC System Manager: _____

Signature of CQC System Manager: _____

Date: _____

1.4 ENGLISH LANGUAGE

All specifications, drawings, design analysis, design calculations, shop drawings, catalog data, materials lists, and equipment schedules submitted shall be in the English language. However, the local language of host country shall be added to project as-built drawings.

1.5 UNITS OF MEASUREMENT

Design documents shall be prepared in accordance with the guidance offered in SECTION 01415 METRIC MEASUREMENTS.

The metric units used are the International System of Units (SI) developed and maintained by the General Conference on Weights and Measures (CGPM); the name International System of Units and the international abbreviation SI were adopted by the 11th CGPM in 1960.

1.5.1 Drawings

1.5.1.1 Site Layout

All site layout data shall be dimensioned in meters or coordinates, as appropriate. All details and pipe sizes shall be dimensioned in millimeters.

EXAMPLE: Masonry openings shall be a U.S. module to suit a standard U.S. door. The dimensions of the opening shall be given in SI units. Metric dimensions for site plans shall be in meters and fraction thereof. Dimensions for all other drawings shall be in millimeters using hard metric designations (example: 12 meters = 12 000). Hard metric is defined as utilizing standard metric products and the use of measurements in increments of fifty (50) and one hundred (100) millimeters.

1.5.1.2 Georeference

All site plans shall be geo-referenced using the WGS 1984 coordinate system, specifically the following: WGS 1984 UTM one 42 N. If the designer is not able to use the stated coordinate system the coordinate system used shall be correlated to the stated coordinate system. A table shall be provided within the site drawing set cross referencing the WGS84 system to that utilized. This is required to allow AED to incorporate the plans into GIS for storage, map production, and possible geospatial analysis of the different work sites.

1.5.2 Design Calculations

Calculations shall be in SI units to meet the requirements of the design. Quantities on the contract drawings stated in SI units, shall also be stated in SI units in the design analysis to match the drawings.

1.5.3 Specifications

All equipment and products shall be specified according to U.S. standards and described by appropriate units as required herein.

1.6 WITHHOLDING OF PAYMENT FOR SUBMITTALS

1.6.1 Design Submittals

Payment for Design work will not be made in whole or in part until the Government has reviewed and cleared the design for construction.

1.6.2 Construction Submittals

Payment for materials incorporated in the work will not be made if required approvals have not been obtained. In event under separate clause of the contract, the Design-Build Contractor is allowed partial or total invoice payment for materials shipped from the Continental United States (CONUS), and/or stored at the site, the Design-Build Contractor shall with his request for such payment, submit copies of approvals (ENG Form 4025) certifying that the materials that are being shipped and/or stored have been approved and are in full compliance with the contract technical specifications.

PART 2 PRODUCTS

2.1 GENERAL

The following are contract deliverables which expound upon and finalize the design parameters/requirements outlined within the contract documents. They shall be prepared in such a fashion that the Prime Contractor is responsible to the Government and not as an internal document between the Prime Contractor and its Subcontractors, Vendors, Suppliers, etc.

2.2 DESIGN ANALYSIS

2.2.1 Submittal

A design analysis, written in the English Language with SI units of measure shall be submitted for review by the Government. The design analysis is a written explanation of the project design which is expanded and revised (updated) as the design progresses. The design analysis shall contain all explanatory material giving the design rationale for any design decisions which would not be obvious to an engineer reviewing the final drawings and specifications. The design analysis contains the criteria for and the history of the project design, including criteria furnished by the Government, letters, codes, references, conference minutes, and pertinent research. Design calculations, computerized and manual, are included in the design analysis. Narrative descriptions of design solutions are also included. Written material may be illustrated by diagrams and sketches to convey design

concepts. Catalog cuts and manufacturer's data for all equipment items, shall be submitted. Copies of all previous design phase review comments and the actions assigned to them shall be included with each submission of the design analysis. Specific requirements for the design analysis, listed by submittal phase, are contained hereinafter.

2.2.2 Format

Format of design analysis shall closely match the standard format referenced within the request for proposal (RFP).

2.3 DESIGN CALCULATIONS

When they are voluminous, they shall be bound separately from the narrative part of the design analysis. The design calculations shall be presented in a clean and legible form incorporating a title page and index for each volume. A table of contents, which shall be an index of the indices, shall be furnished when there is more than one volume. The source of loading conditions, supplementary sketches, graphs, formulae, and references shall be identified. Assumptions and conclusions shall be explained. Calculation sheets shall carry the names or initials of the computer and the checker and the dates of calculations and checking. No portion of the calculations shall be computed and checked by the same person.

2.3.1 Automatic Data Processing Systems (ADPS)

When ADPS are used to perform design calculations, the design analysis shall include descriptions of the computer programs used and copies of the ADPS input data and output summaries. When the computer output is large, it may be divided into volumes at logical division points.

2.3.1.1 Computer Printouts

Each set of computer printouts shall be preceded by an index and by a description of the computation performed. If several sets of computations are submitted, they shall be accompanied by a general table of contents in addition to the individual indices.

2.3.1.2 Preparation of the Description

Preparation of the description which must accompany each set of ADPS printouts shall include the following.

a. Explain the design method, including assumptions, theories and formulae.

b. Include applicable diagrams, adequately identified.

c. State exactly the computation performed by the computer.

d. Provide all necessary explanations of the computer printout format, symbols, and abbreviations.

e. Use adequate and consistent notation.

f. Provide sufficient information to permit manual checks of the results.

2.4 SPECIFICATIONS

Specifications shall be prepared in accordance with the Construction Specifications Institute (CSI) format. The Design-Build Contractor prepared specifications shall include as a minimum, all applicable specification sections referenced by the CSI. Where the CSI does not reference a specification section for specific work to be performed by this contract, the Design-Build Contractor shall be responsible for creating the required specification.

2.4.1 Preparation of Proprietary Non-Generic Design Documents

During the course of design, the designer shall specify specific proprietary materials, equipment, systems, and patented processes by trade name, make, or catalog number. The subsequent use of construction submittals to supplant and/or supplement incomplete design effort is unacceptable. Design submittals containing non-proprietary and/or generic design criteria where proprietary items are available, will be returned for resubmission.

2.4.2 Use of Unified Facilities Guide Specifications (UFGS)

If UFGS are used, it is the sole responsibility of the Design-Build Contractor to prepare these specifications in strict conformance with the paragraph entitled PREPARATION OF PROPRIETARY NON-GENERIC DESIGN DOCUMENTS. UFGS containing non-proprietary and/or generic design criteria, where proprietary items are available, will be returned for resubmission. If the UFGS contains a “SUBMITTALS” paragraph, the Design-Build Contractor shall delete it and incorporate all required information directly into the design documents. Under no circumstances will the Design-Build Contractor be permitted to use submittals and shop drawings to finalize an incomplete design. UFGS (Uniform Federal Guide Specifications) are required for this project when U.S. products and systems are required or used. Current UFGS information may be obtained at the following location: http://www.wbdg.org/ccb/browse_org.php?o=70.

Specifications for UFGS are in SpecsIntact format. SpecsIntact is government sponsored software used to edit specifications for government contracts. The software is available at the following link: http://specsintact.ksc.nasa.gov/index.asp.

2.4.3 Quality Control and Testing

Specifications shall include required quality control and further indicate all testing to be conducted by the Design-Build Contractor, its subcontractors, vendors and/or suppliers.

2.4.4 Ambiguities and indefinite specifications

Ambiguities, indefinite specification requirements (e.g., highest quality, workmanlike manner, as necessary, where appropriate, as directed etc) and language open to interpretation is unacceptable.

2.4.5 Industry Standards

2.4.5.1 U.S. Industry Standards

The Specifications shall be based on internationally accepted U.S. industry Standards. Customarily accepted publications may be found in the UNIFIED MASTER REFERENCE LIST (UMRL) which may be located at the following URL: http://www.hnd.usace.army.mil/techinfo/UFGS/UFGSref.htm.

To access the UMRL select the “Unified Facilities Guide Specifications” tab and scroll down to Unified Master Reference List (UMRL) (PDF version).

Examples of U.S. standards are: National Fire Protection Association (NFPA), International Building Code (IBC), American Concrete Institute (ACI), American Water Works Association (AWWA), ADAAG (ADA Accessibility Guidelines) for Buildings and Facilities, etc. Standards referenced shall be by specific issue; the revision letter, date or other specific identification shall be included.

This document lists publications referenced in the Unified Facilities Guide Specifications (UFGS) of the Corps of Engineers (USACE), the Naval Facilities Engineering Command (NAVFAC), the Air Force Civil Engineer Support Agency (AFCESA), and the guide specifications of the National Aeronautics and Space Administration (NASA). This document is maintained by the National Institute of Building Sciences (NIBS) based on information provided by the agencies involved and the standards producing organizations. The listing is current with information available to NIBS on the date of this publication.

Standards referenced in specifications and drawings prepared by the Design-Build Contractor shall be by specific issue; the revision letter, date or other specific identification shall be included.

2.4.5.2 Non U.S. Industry Standards

If non U.S. industry standards (e.g., codes, regulations, or technical references and norms) are authorized for use under this contract and are incorporated in the

Design-Build Contractor's design, one (1) copy of each standard referenced shall be provided to the Government.

Where a U.S. design and/or construction standard cannot be referenced due to non-availability of products and/or systems, another specification format using the CSI guidelines may be utilized for that particular product and/or system. If a majority of the specifications within this project reference non-U.S. products due to availability and/or other factors, the entire set of specifications are not required to be in UFGS and SpecsIntact format.

2.4.6 Incorporation of Government review comments

Subsequent to submission to the Government, the specifications shall be finalized by the incorporation of Government review comments.

2.5 DRAWINGS

Drawings, prepared in the English language with SI units of measure, are a part of each submittal. The working drawings shall be adequately labeled and cross-referenced for review. Complete, thoroughly checked and coordinated contract drawings shall be submitted. The contract drawings submitted for final review shall include the drawings previously submitted which have been revised and completed as necessary. The Design-Build Contractor shall have incorporated any design review comments generated by previous design review(s), have completed all of his constructability and coordination checks, and have the drawings in a Ready-to-Build condition. The drawings shall be complete at this time and contain all the details necessary to ensure a clear understanding of the work throughout construction.

2.5.1 Drawing Size

Project is required to be in SI units, all drawings shall be prepared in size "A1" sheets (594mm by 841mm). If project is required to be in English units, all drawings shall be modified Architectural D size (24 inches by 36 inches) sheets. Design submissions may be prepared in half size (11 inches by 17 inches) to save paper and for ease of review. All final contract drawing sets shall be prepared with full size sheets. Drawings shall be trimmed to size if necessary.

2.5.2 Computer Assisted Design and Drafting (CADD)

Computer Assisted Design and Drafting (CADD) is required for all work related to this contract. The CADD deliverables shall meet the requirements of the AEC CAD Standard Release 2.0. Emphasis is on drawings meeting sheet layout standards, level/layer naming standards and sheet naming conventions. CAD standards may be found at the following link: https://tsc.wes.army.mil/products/standards/aec/aecstdweb.asp. Transatlantic Programs Center Design Instructions Manual, Chapter 22 entitled COMPUTER

ASSISTED DESIGN AND DRAFTING. The Contractor shall furnish the digital as-built drawing files in .DWG file format utilizing AutoDesk AutoCAD revision 2004 or later. Drawings prepared in any convention other than CADD, must have approval of the Contracting Officer.

2.5.3 Plotter Prepared Original Drawings

Plotter prepared original drawings shall be prepared on 20 pound bond paper, unless otherwise approved and shall be plotted on the matte side. Raster plotters must provide a minimum resolution of 400 dpi while vector plotters shall provide a minimum resolution of 0.0010 inch with an accuracy of +0.1% of the move and a repeatability error of not more than 0.005 inch. Drawings produced from dot matrix plotters are not acceptable. Plots accompanied by the digital design file may be prepared on vellum: translucent bond is not acceptable. Line density shall be equivalent to that produced by black India ink: half-tones and gray scale plots are not acceptable unless otherwise approved. Manual changes to plotted originals are not acceptable.

2.5.4 Half-Size Reduction

Preparation of all work shall accommodate half size reduction unless project is required to meet SI units or shall be instructed otherwise by the Contracting Officer.

2.5.5 Symbols and Abbreviations

Symbols and abbreviations shall be in accordance with AEC CAD Standard Release 2.0 or later /or conform to the symbols used with a CADD program such AutoDesk AutoCAD release 2004 or greater.

2.5.6 Design Discipline Designation Format

Referencing AEC CAD Standard Release 2.0, the drawing package shall be divided into the following proposed divisions:

Use the following for AEC CAD Standard Release 2.0:

Discipline Designation	Discipline
C	Civil
S	Structural
A	Architectural
F	Fire Protection
P	Plumbing
M	Mechanical
E	Electrical

Each drawing for the particular facility shall be designated by the discipline designation and sheet number and shall be consecutive within each discipline.

AEC CAD Standard, referenced herein, shall be adhered to, especially with regard to sheet naming, numbering and level/layer naming standards. Copies of level/layer naming standards are available at the following locations (in comma delimited format - .CSV) and may be imported into Microstation and/or AutoCAD release 2000 or later:

Public FTP site:
ftp://anonymous:anonymous@ftp.usace.army.mil/pub/aed/Standards/AEC_Nat_CAD_Std/level_libs/
SharePoint site:
https://aedsharepoint.tac.usace.army.mil/C16/Drawings/Document%20Library/AEC_CAD_level_templates.ZIP

2.5.7 Grouping Drawings

A building or individual facility design shall, except for site development drawings, be grouped in the design drawing package so that a single building may be withdrawn by deleting or removing a consecutive block of sheets.

2.5.8 Title and Revision Block

Title and revision block shall match FIGURES 1 through 5 furnished in the paragraph entitled ATTACHMENTS.

2.5.9 Drawing Scales

The scales indicated on the following list shall, in general, be used for all drawings. The Contractor may, at its option, make exceptions to scales indicated, if approved in writing by the Contracting Officer.

Site, Grading and Utility Plans - 1:500, if in SI units

Key Plans as large as practical

Cross Sections/elevations (as large scale as possible to adequately show required detail) - 1:100, if in SI units

Details - 1:10 minimum, if in SI units

2.5.10 Binding

All volumes of drawing prints shall be firmly bound and shall have covers of heavier bond than the drawing sheets. If posts are used to fasten sheets together, the drilled holes on the bond edges of the sheets shall be on 8-1/2-inch centers.

2.5.11 Typical Sheets

Typical sheets of standard details uniformly used on all buildings are authorized and encouraged. Sheets of standard details may be prepared so that they can be reused if the design package must be divided into separate construction packages. Each typical detail drawing sheet may be limited to a particular design discipline. Standard detail sheets shall be organized by discipline as are the other drawing sheets. Details peculiar to one facility shall not be shown in the standard details but with the group of drawings for the facility to which it pertains.

2.5.12 Index Sheet(s)

The first sheet of each volume in a project shall be a cover sheet. In general, the second sheet shall be the first index. Multiple index sheets may be required, depending on the project size. All index sheets shall be included with each volume of drawings and shall be an index of all the individual drawings in all volumes. The index shall list sequentially the site development drawings, each facility's drawings, and the standard details drawings (if any), and shall locate them by volume and file number. Each index sheet shall be signed and stamped by a principal of the Design-Build Contractor.

2.5.13 Drawing File Number

The File Number is unique to each drawing and is a combination of a project location code, project number, facility designator and the CADD file name. Unassigned numbers or skipped sheets shall be labeled as "Not Used" on the index sheets. Cover sheets are not numbered.

2.5.14 Specifications Placed on the Drawings

Details of standard products or items which are adequately covered by specifications shall not be included on the drawings.

2.5.15 Legends

For each submittal, legends of symbols and lists of abbreviations shall be placed on the drawings. They shall include all of the symbols and abbreviations used in the drawing set, but shall exclude any symbols and abbreviations not used. Since many symbols are limited to certain design disciplines, there is a definite advantage to the use of separate legends on the initial sheet of each design discipline or in the Standard Details package for each discipline. If legends have not been shown by discipline, a legend shall be placed on the first drawing.

2.5.16 Location Grid

To facilitate the location of project elements and the coordination of the various disciplines' drawings, all plans shall indicate a column line or planning grid, and all floor plans (except structural plans) shall show room numbers.

2.5.17 Composite and Key Plans

If the plan of a large building or structure must be placed on two or more sheets in order to maintain proper scale, the total plan shall be placed on one sheet at a smaller scale. Appropriate key plans and match lines shall appear on segmented drawings. Key plans shall be used not only to relate large scale plans to total floor plans but also to relate individual buildings to complexes of buildings. Key plans shall be drawn in a convenient location and shall indicate the relative location of the represented plan area by crosshatching.

2.5.18 Revisions

Drawing revisions shall be prepared only on the original CADD files. A revision area is required on all sheets.

PART 3 EXECUTION

3.1 GENERAL

3.1.1 Design Concept Coordination Meeting

In addition to regular meetings with the Government the Contractor shall conduct formal status briefings on a monthly basis, as a minimum, to provide a management overview of design development. Shortly after contract award the Government may choose to conduct meetings with the Design-Build Contractor to refine proposal concept features. The purpose of the meeting is to assure attention to project requirements and to suggest ways of improving the design prior to tentative level submissions.

3.1.2 Government Design Changes

Government design changes which do not increase construction costs shall be made at no charge to the Government. The Contracting Officer may request design submittals in addition to those listed when deemed necessary to adequately describe the work covered in the contract documents. Submittals shall be made in the respective number of copies and to the respective addresses set forth in the paragraph entitled SUBMITTAL PROCEDURE. Each submittal shall be complete and in sufficient detail to allow ready determination of compliance with contract requirements.

3.2 SUBMITTAL REGISTERS

3.2.1 Contractor-Furnished Design Documents Submittal Register (TAC Form 122-E)

3.2.1.1 General

The Contractor shall submit as part of his Project Schedule, information regarding the submittal and clearance for construction of Contractor furnished design documents. In addition, the Contractor shall provide a complete submittal register in the sample format (TAC Form 122-E - Contractor Furnished Design Documents Submittal Register) which is attached to this section. The Contractor shall, within fifteen (15) calendar days after approval of the Project Schedule, submit 3 copies of his finalized Contractor Furnished Design Document Submittal Register to the Contracting Officer for approval. The submittal register shall consist of a tabulation of all the Contractor furnished design documents with the indicated dates integrated into the Design Progress Schedule. The Contractor shall post all actual dates of submittal actions (including clearance for construction) as they occur.

3.2.1.2 Additions or Revisions

Any additions or changes required to be made to the TAC Form 122-E as a result of the Contracting Officer's review shall be incorporated into the TAC Form 122-E by the Contractor and a re-submittal of 35% and 100% design submittald and (3) copies shall be affected within five (5) calendar days after receipt of the Contracting Officer's review comments.

3.2.1.3 Submission Requirements

A copy of the initial TAC Form 122-E and each monthly update prepared by the Contractor, shall be submitted to

AFGHANISTAN ENGINEER DISTRICT

(1) DHL, FEDEX, UPS or any other courier service:
U.S. Army Corps of Engineers
Afghanistan Engineer District
House # 1, St. #1 West
West Wazir Akbar High School
Behind Amani High School
Kabul, Afghanistan
Attn.: Tony Lijewski

(2) U.S. Postal Service:
U.S. Army Corps of Engineers
Afghanistan Engineer District (CEAED-EC)
Attn.: Qalaa House
APO AE 09356]

TRANSATLANTIC PROGRAMS CENTER

U.S. Army Corps of Engineers
Transatlantic Programs Center (CETAC-EC-TT-QC Attn: Judy Funkhouser)
201 Prince Frederick Drive

Winchester, Virginia 22602

3.2.2 Construction Submittal Register (ENG Form 4288)

Attached to this section is ENG Form 4288 which the Contractor is responsible for developing for this contract. All construction submittals shall be shown on this register. The submittal register shall be the controlling document and will be used to control all construction submittals throughout the life of the contract. The Contractor shall maintain and update the register on a monthly basis for the Contracting Officer's approval.

3.3 TRANSMITTAL FORM (ENG Form 4025)

The sample transmittal form (ENG Form 4025) attached to this section shall be used for submitting both design and construction submittals in accordance with the instructions on the reverse side of the form. These forms will be furnished to the Contractor. This form shall be properly completed by filling out all the heading blank spaces and identifying each item submitted. Special care will be exercised to ensure proper listing of the specification paragraph and/or sheet number of the contract drawings pertinent to the data submitted for each item.

3.4 PROGRESS SCHEDULE

The Contractor shall prepare and submit a design progress schedule to the Contracting Officer. The Critical Path Method (CPM) of network calculation shall be used to generate the Project Schedule. The progress schedule shall show, as a percentage of the total design price, the various items included in the contract and the order in which the Contractor proposes to carry on the work, with dates on which he will start the features of the work and the contemplated dates for completing same. Significant milestones such as review submittals shall be annotated. The Contractor shall assign sufficient technical, supervisory and administrative personnel to insure the prosecution of the work in accordance with the progress schedule. The Contractor shall correct the progress schedule at the end of each month and shall deliver Submittal section AED (3) copies to the Contracting Officer. The approved Project Schedule shall be used to measure the progress of the work, to aid in evaluating time extensions, and to provide the basis of all progress payments.

3.5 SCHEDULING

3.5.1 Design Submittals

Adequate time (a minimum of fourteen (14) calendar days exclusive of mailing time) shall be allowed for review and clearance for construction. If the Contractor fails to submit design submittals in a timely fashion, or repetitively submits design submittals that are not in strict conformance with the contract documents, no part of

the time lost due to such actions shall be made the subject of claim for extension of time or for excess costs or damages by the Contractor.

3.5.2 Post Design Construction Submittals

Submittals covering component items forming a system or items that are interrelated shall be scheduled to be coordinated and submitted concurrently. Certifications to be submitted with the pertinent drawings shall be so scheduled. Adequate time (a minimum of fourteen (14) calendar days exclusive of mailing time) shall be allowed for review and approval. If the Contractor fails to submit post design construction submittals in a timely fashion, or repetitively submits submittals that are not in strict conformance with the contract documents, no part of the time lost due to actions shall be made the subject of claim for extension of time or for excess costs or damages by the Contractor.

3.6 SUBMITTAL PROCEDURE

3.6.1 Design Submittals

3.6.1.1 Afghanistan Engineer District (AED)

Two (2) hard copies and one soft copy_ (1) copies of all design submittals shall be transmitted to the Government at the following address by means of ENG Form 4025:

AFGHANISTAN ENGINEER DISTRICT

(1) DHL, FEDEX, UPS or any other courier service:
U.S. Army Corps of Engineers
Afghanistan Engineer District
House # 1, St. #1 West
West Wazir Akbar High School
Behind Amani High School
Kabul, Afghanistan
Attn.:__[_____]

(2) U.S. Postal Service:
U.S. Army Corps of Engineers
Afghanistan Engineer District (CEAED-EC)
Attn.: Qalaa House
APO AE 09356

TRANSATLANTIC PROGRAMS CENTER

U.S. Army Corps of Engineers
Transatlantic Programs Center
ATTN: CETAC-EC-TT-QC (J. Funkhouser)

201 Prince Frederick Drive
Winchester, Virginia 22602

One (1) set of designs (3) copies of all design submittals shall be transmitted to the Government at the following address by means of ENG Form 4025:

TRANSATLANTIC PROGRAMS CENTER

U.S. Army Corps of Engineers
Transatlantic Programs Center
ATTN: CETAC-EC-TT-QC (J. Funkhouser)
201 Prince Frederick Drive
Winchester, Virginia 22602

The drawings shall be submitted in full size and half size formats unless otherwise noted.

For the Afghanistan Engineer District and/or field office, the Contractor shall submit two (1) full size and one (2) half size sets of drawings and a complete set of specification, design analysis and a soft copy on CD-ROM of all of the listed herein.

3.6.1.2 Resident/Area Engineer Office

Two (2) half size copies and one (1) full size additional copy of each design submittal shall be transmitted to the overseas field office administering the construction portion of the contract at the following address:

Transatlantic Program Center
The drawings shall be submitted in electronic file format unless otherwise noted.

3.6.1.3 Deliverables "Cleared for Construction"

Once the Design Documents have been "Cleared for Construction" by the Contracting Officer, the Design-Build Contractor shall clearly identify each document by annotating it as “Cleared for Construction”. One (1) complete hardcopy and CD set of all finalized design documents shall be submitted to the Government as follows:

AFGHANISTAN ENGINEER DISTRICT

(1) DHL, FEDEX, UPS or any other courier service:
U.S. Army Corps of Engineers
Afghanistan Engineer District
House # 1, St. #1 West
West Wazir Akbar High School
Behind Amani High School
Kabul, Afghanistan

Attn.: Tony Lijewski

(2) U.S. Postal Service:
U.S. Army Corps of Engineers
Afghanistan Engineer District (CEAED-EC)
Attn.: Qalaa House
APO AE 09356

TRANSATLANTIC PROGRAMS CENTER
U.S. Army Corps of Engineers
Transatlantic Programs Center
ATTN: CETAC-EC-TT-QC (J. Funkhouser)
201 Prince Frederick Drive
Winchester, Virginia 22602

Resident Area Engineer Office AED

Field office or site location of design project.

This is a Design-Build project and in accordance with Contract Clause 52.227-7022 GOVERNMENT RIGHTS (UNLIMITED), the Government has non-exclusive rights to use the design on other projects. Therefore, the As-Builts furnished to the Government must be in an editable format.

3.6.1.4 Editable CADD Format As-Builts

In accordance with section 01060 SPECIAL CLAUSES clause PREPARATION OF AS-BUILT DRAWINGS (CONTRACTOR), one (1) set of the Government approved As-Builts shall be submitted to the following address in an editable CADD format:

AFGHANISTAN ENGINEER DISTRICT

(1) DHL, FEDEX, UPS or any other courier service:
U.S. Army Corps of Engineers
Afghanistan Engineer District
House # 1, St. #1 West
West Wazir Akbar High School
Behind Amani High School
Kabul, Afghanistan
Attn.: Tony Lijewski

(2) U.S. Postal Service:
U.S. Army Corps of Engineers
Afghanistan Engineer District (CEAED-EC)
Attn.: Qalaa House
APO AE 09356

This requirement is in addition to all other submission requirements stated elsewhere in the contract.

3.6.1.5 Digital Transmission of Design Submittals

The Design-Build Contractor shall submit design deliverables addressed by this specification in digital format. The following procedure shall be followed:

a. USE OF FILE TRANSFER PROTOCOL (FTP) SERVER. The Design-Build contractor will download all design files on either its own File Transfer Protocol (FTP) Server, the Corps FTP Server or as otherwise directed. Afghanistan Engineer District (AED) prefers that the contractor provide the soft copy of design submittals be burned to CD-ROM and submitted as such. The procedure to be followed will be established at the Pre-Construction Conference and the appropriate log-in and password information will be exchanged between the Government and the Design-Build Contractor.

NOTE: AED accepts AutoCad release 2004 or higher drawing file format as the standard due to the fact that the local region does not support Microstation

b. TRANSLATED OR CONVERTED FILES DRAWING FILES. Digital drawing files shall be prepared as indicated in the paragraph entitled COMPUTER ASSISTED DESIGN AND DRAFTING (CADD). Under NO circumstances shall the Design-Build Contractor translate (or convert) the files from AutoDesk AutoCAD to Bentley Microstation.

c. NOTIFICATION. The Design-Build Contractor shall notify all recipients by email that the Design submittal has been downloaded to the designated FTP server or electronically provided on a CD and is ready for Government review. This email shall include a scanned copy of the ENG Form 4025 signed by the Design-Build Contractor's Contractor Quality Control (CQC) Organization. It shall also include an updated digital copy of TAC Form 122-E. The Government will use the digital submittal as an advance copy pending receipt of an official hardcopy version in accordance with the paragraph entitled SUBMITTAL PROCEDURE. Subsequent to a period of demonstrated successful performance, the Government may elect to eliminate the requirement to submit an official hardcopy version.

The TAC Form 122-E shall be prepared in a spread sheet software that readily allows the file to be saved as a *.CSV file that can subsequently be imported into the Corps of Engineers Resident Management System (RMS) software.

d. RETURN OF GOVERNMENT REVIEWED SUBMITTALS. Subsequent to the Government review, the Eng Form 4025 with comments (if applicable) will be returned to the Design-build Contractor digitally by email. Hardcopies of these documents will subsequently be submitted to the Design-Build Contractor via the

United States Postal Service (USPS). The Government may elect to stop sending hardcopies if it deems that digital transmission of design submittals is progressing satisfactorily.

e. SUPPLEMENTAL ACTIONS. All supplemental actions, resubmittals, and subsequently scheduled submissions shall be performed by the Design-Build contractor as indicated within this paragraph.

AED: As-builts shall be prepared and submitted in .DWG format utilizing AutoDesk AutoCad release 2004 or higher format.

3.6.2 Post Design Construction Submittals

Three (3) copies of all post design construction submittals shall be transmitted to the overseas district office administering the construction portion of the contract at the following address:

AFGHANISTAN ENGINEER DISTRICT

(1) DHL, FEDEX, UPS or any other courier service:
U.S. Army Corps of Engineers
Afghanistan Engineer District
House # 1, St. #1 West
West Wazir Akbar High School
Behind Amani High School
Kabul, Afghanistan
Attn.: Tony Lijewski

(2) U.S. Postal Service:
U.S. Army Corps of Engineers
Afghanistan Engineer District (CEAED-EC)
Attn.: Qalaa House
APO AE 09356

Submittal area of the AED engineering section

One (1) additional copy of each Post Design Construction submittal shall be transmitted to the Government at the following stateside address by means of ENG Form 4025:

TRANSATLANTIC PROGRAMS CENTER

U.S. Army Corps of Engineers
Transatlantic Programs Center
ATTN: CETAC-EC-TT-QC (J. Funkhouser)
201 Prince Frederick Drive
Winchester, Virginia 22602

Shop Drawing section

Submittals of Operations and Maintenance (O & M) Manuals in sets of (3) three copies shall be as follows:

AFGHANISTAN ENGINEER DISTRICT

(1) DHL, FEDEX, UPS or any other courier service:
U.S. Army Corps of Engineers
Afghanistan Engineer District
House # 1, St. #1 West
West Wazir Akbar High School
Behind Amani High School
Kabul, Afghanistan
Attn.: Tony Lijewski

(2) U.S. Postal Service:
U.S. Army Corps of Engineers
Afghanistan Engineer District (CEAED-EC)
Attn.: Qalaa House
APO AE 09356

3.6.3 Submittal Numbering System

Instructions on the numbering system to be used for construction submittals follows:

3.6.3.1 Submittals

Shop drawings and materials are listed on the Submittal Register (ENG Form 4288) as follows:

a. List is prepared according to contract specifications and drawings, picking up all items involved in the project.

b. This list is divided into sections as indicated in the specifications for example:

Sec	01015	"Technical Requirements"
Sec	01335	“Design Submittals
Sec.	02831	"Chain-Link Fence"
Sec.	02710	"Subdrainage System"
Sec	03300	"Concrete For Building Construction"
Sec.	04200	"Masonry"

3.6.3.2 Numbering procedures for transmittal on ENG FORM 4025

a. Each section, may include a list of items. All these items will then be listed with a progressive number within the sections they belong to, for example:

Sec. 01015 will have 01015.00 (Basic number)
Item x " " 01015.01
Item y " " 01015.02
Item z " " 01015.03

Sec. 01335 will have 01335.00 (Basic number)
35% design drawings " " 01335.01
100% design drawings " " 01335.03

Sec. 02710 will have 02710.00 (Basic number)
Item x " " 02710.01
Item y " " 02710.02
Item z " " 02710.03

Sec. 02600 will have 02600.00 (Basic number)
Item x " " 02600.01
Item y " " 02600.02

Sec. 03300 will have 03300.00 (Basic number)
Item x " " 03300.01
Item y " " 03300.02
etc.

b. It is evident a transmittal will never show a Section number i.e., 02831.00, 03300.00, etc., since these are only the basic numbers of the system. Numbers on transmittals will be the item numbers, i.e., 01015.01, 02710.01, 02710.02, 02710.03, 03300.01, 03300.02, etc. All items, as listed on the Submittal Register, will be submitted via a separate transmittal form ENG FORM 4025 thus avoiding getting together more than one item (as listed) and more than one number. There are items, on the other hand, which may be submitted all together on the same transmittal form. This must be established before submission is made.

c. Sec. 10800 "Toilet Accessories" - this section will have basic number 10800.00 - all items relative to it will be listed one by one on separate lines. ONLY one transmittal number will then be given for all of these "10800.01" which will include i.e., robe hook, toilet paper holder, mirror, soap holder, cabinet for paper towels, etc. Each one of these items will be listed on the same Transmittal Number 10800.01 as item 1, item 2, item 3, etc.

For design reviews the standard Corps of Engineers method of review is through DrChecks through projnet https://www.projnet.org/projnet/binKornHome/index.cfm All of AED design submittal reviews shall be done through DrChecks.

3.6.3.3 Resubmittals

Should the Contractor be required to resubmit any transmittal, it will be accomplished by utilizing the same transmittal number followed by the number "-1" for the first resubmittal, "-2" for the second resubmittal, "-3" for the third resubmittal, etc. For example, a first resubmittal would be "SUBMITTAL PROCEDURES FOR DESIGN BUILD PROJECT" 01335.01-1, a second resubmittal 01335.01-2, etc. The purpose of this system is to avoid deviations from Submittal Register and, to avoid confusion arising from the use of more than one number on transmittal when more than one item is submitted on the same form. This system will also facilitate the use, wherever required, on machine printouts.

3.6.4 Variations

If design documents or construction submittals show variations from the contract parameters and/or requirements, the Contractor shall justify such variations in writing, at the time of submission. Additionally, the Contractor shall also annotate block "h" entitled "variation" of ENG FORM 4025. After design submittals have been reviewed and cleared for construction by the Contracting Officer, no resubmittal for the purpose of substituting materials, equipment, systems, and patented processes will be considered unless accompanied by the following:

a. Reason or purpose for proposed variation, substitution, or revision.

b. How does quality of variation compare with quality of the specified item? This shall be in the form of a technical evaluation tabulating differences between the item(s) originally specified and what is proposed.

c. Provide a cost comparison. This shall include an acquisition and life cycle cost comparison.

d. For proprietary materials, products, systems, and patented processes a certification signed by an official authorized to certify in behalf of the manufacturing company that the proposed substitution meets or exceeds what was originally specified.

e. For all other actions, a certification signed by a licensed professional engineer or architect certifying that the proposed variation or revision meets or exceeds what was originally specified.

f. Advantage to the Government, if variation is approved, i.e. Operation and Maintenance considerations, better product, etc.

g. Ramifications and impact, if not approved.

If the Government review detects any items not in compliance with contract requirements or items requiring further clarification, the Contractor will be so

advised. Lack of notification by the Contracting Officer of any non-complying item does not relieve the Contractor of any contractual obligation.

3.6.5 Non-Compliance

The Contracting Officer will notify the Contractor of any detected noncompliance with the requirements of this specification. The Contractor shall take immediate corrective action after receipt of such notice. Such notice, when delivered to the Contractor at the worksite, shall be deemed sufficient for the purpose of notification. If the Contractor fails or refuses to comply promptly, the Contracting Officer may issue an order stopping all or part of the work until satisfactory corrective action has been taken. No part of the time lost due to such stop orders shall be made the subject of claim for extension of time or for excess costs or damages by the Contractor.

3.7 REVIEW OF CONTRACTOR PREPARED DESIGN DOCUMENTS

3.7.1 General

The work under contract will be subject to continuous review by representatives of the Contracting Officer. Additionally, joint design review conferences with representation by all organizations having a direct interest in the items under review may be held. The Design-Build Contractor shall furnish copies of all drawings and related documents to be reviewed at the review conference on or before the date indicated by the Government. Additional conferences pertaining to specific problems may be requested by the Design-Build Contractor or may be directed by the Contracting Officer as necessary to progress the work. The Design-Build Contractor shall prepare minutes of all conferences and shall furnish two copies to the Contracting Officer within seven (7) days after the conference.

3.7.2 Independent Design Review

The Design-Build Contractor shall have someone other than the Designer or Design Team perform an independent review of all specifications, drawings, design analysis, calculations, and other required data prior to submission to the Government. Upon completion of this review, the Design-Build Contractor shall certify that each design submittal is complete, accurate, is in strict conformance with all contract requirements, that repetition has been avoided, that all conflicts have been resolved, and that the documents have thoroughly coordinated and cross checked against all the applicable disciplines to prevent the omission of vital information.

3.7.3 Contractor's Quality Control Organization Review

This review shall be for the purposes of eliminating errors, interferences, and inconsistencies, and of incorporating design criteria, review comments, specifications, and any additional information required. Design submittals

submitted to the Contracting officer without evidence of the Contractor's certified approval will be returned for resubmission. No part of the time lost due to such resubmissions shall be made the subject of claim for extension of time or for excess costs or damages by the Contractor.

Action Code on Eng Form 4025 the “G – Other (specify)" Code must be used. ENG Forms 4025 and 4026 will be annotated as follows:

G – Cleared for Construction

G – Cleared for Construction, except as noted in attached comments

G – Cleared for Construction, except as noted in attached comments, resubmission required

G -- NOT Cleared for Construction, see attached comments, resubmission required

FX – Receipt acknowledged, does not comply as noted with contract requirements.

NOTE: Cleared for construction does not relieve the Design-Build Contractor from the responsibility for any errors or omissions in the design, nor from responsibility for complying with the requirements of this contract.

3.7.4 Government Review

Within 14 days after Notice to Proceed, the Contractor shall submit, for approval, a complete design schedule with all submittals and review times indicated in calendar dates. The Contractor shall update this schedule monthly. After receipt, the Government will be allowed fourteen (14) days to review and comment on the 35% a design submittal and fourteen (14) days to review and comment on the 100% design submittal, except as noted below. For each design review submittal, comments from the various design sections and from other concerned agencies involved in the review process will be made in the on-line review management system DrChecks$_{SM}$ (https://www.projnet.org/projnet/binKornHome/index.cfm). Contractor shall coordinate with the Contracting Officer and/or Representative(s) to register for DrChecks$_{SM}$ use. The review will be for conformance with the technical requirements of the solicitation and the Successful Offeror's (Contractor's) RFP proposal.

If a design submittal is deficient, it will be returned for correction and resubmission. The review time will begin when the corrected submittal is received.] The design-build contractor may be liable for liquidated damages owed to the Government for returned design submittals due to deficiencies.

[The contractor shall not begin construction work until the Government has

reviewed the contractor's design and has cleared it for construction. Clearance for construction does not mean Government approval. Government review shall not be construed as a complete check but will evaluate the general design approach and adherence to contract parameters. The Government Review is often limited in time and scope. Therefore, the Contractor shall not consider any review performed by the Government as an excuse for incomplete work. Upon completion of the review, all comments will be forwarded to the Contractor. The Contracting Officer will indicate whether the design submittal has or has not been cleared for construction using the following action codes:

A – Cleared for Construction

B – Cleared for Construction, except as noted in attached comments

C – Cleared for Construction, except as noted in attached comments, resubmission required

E - NOT Cleared for Construction, see attached comments, resubmission required

FX – Receipt acknowledged, does not comply as noted with contract requirements.

These codes shall NOT be used by the Design-Build Contractor. Design-Build Contractor's Quality Control Organization will annotate Block "g" entitled "FOR CONTRACTOR USE CODE" of Eng Form 4025-R using the action codes listed on the reverse side of the form.

Design submittals Cleared for Construction by the Contracting Officer shall not relieve the Contractor from responsibility for any design errors or omissions and any liability associated with such errors, nor from responsibility for complying with the requirements of this contract.

3.7.4.1 Incorporation of Government Review Comments

If the Contractor disagrees technically with any comment or comments and does not intend to comply with the comment, he must clearly outline, with ample justification, the reasons for noncompliance within five (5) days after close of review period in order that the comment can be resolved. The Contractor shall furnish disposition of all comments in DrChecks$_{SM}$, with the next scheduled submittal. The disposition shall identify action taken with citation of location within the relevant design document. Generalized statements of intention such as "will comply" or "will revise the specification" are not acceptable. The Contractor is cautioned that if he believes the action required by any comment exceeds the requirements of this contract, that he should flag the comment in DrChecks$_{SM}$ as a scope change, and notify the COR in writing immediately. If a design submittal is over one (1) day late in accordance with the latest design schedule, the Government review period may

be extended 7 days. Submittals date revisions must be made in writing at least five (5) days prior to the submittal. During the design review process, comments will be made on the design submittals that will change the drawings and specifications. The Government will make no additional payments to the Contractor for the incorporation of comments. Review comments are considered part of the design-build process.

The Contractor will be furnished comments from the various design sections of the Corps of Engineers, Afghanistan Engineer District (AED) and / or Europe District (EUD) and / or Transatlantic Programs Center (TAC), as well as from other concerned agencies involved in the review process. The review will be for conformance with the technical requirements and parameters of the contract documents. The Contractor shall either incorporate each comment or, if the Contractor disagrees technically and does not intend to comply with the comment(s), the contractor shall clearly outline, with ample justification, its reasons for its noncompliance within five (5) days after receipt of the comment(s). Additionally, the Contractor is cautioned in that if it believes the action required by any comment exceeds the requirements of this contract, that he should take no action and notify the Contracting Officer in writing immediately. The disposition of all comments shall be furnished in writing with the next scheduled submittal. The review comments and the submittal material for each design review will become the basis for any ensuing design work. Copies of the design review comments with the action taken on each comment noted, shall be bound in all succeeding volumes of the design analysis.

3.7.4.2 Conferences

As necessary, conferences will be conducted between the Design-Build contractor and the Government to resolve review comments.

A review conference will be held for each design submittal. The review conference will be held at the Corps District Office in Kabul, Afghanistan. The Contractor shall bring the personnel that developed the design submittal to the review conference.

3.7.4.3 Design Deficiencies

Design deficiencies noted by the Government shall be corrected prior to the start of design for subsequent features of work which may be affected by, or need to be built upon, the deficient design work.

3.7.5 Design Discrepancies

The Design-Build Contractor shall be responsible for the correction of incomplete design data, omissions, and design discrepancies which become apparent during construction. The Design-Build Contractor shall provide the Contracting Officer with a proposed recommendation for correcting a design error, within three (3) calendar days after notification by the Contracting Officer. The Contracting Officer will notify

the Design-Build Contractor of any detected noncompliance with the foregoing requirements. The Design-Build Contractor shall take immediate corrective action after receipt of such notice. Such notice, when delivered to the Design-Build Contractor at the worksite, shall be deemed sufficient for the purpose of notification. If the Design-Build Contractor fails or refuses to comply promptly, the Contracting Officer may issue an order stopping all or part of the work until satisfactory corrective action has been taken. No part of the time lost due to such stop orders shall be made the subject of claim for extension of time or for excess costs or damages by the Design-Build Contractor. Should extensions of design, fabrication plans and/or specific manufacturer's details be required as a result of a Government issued Change Order, the Government will make an equitable adjustment in accordance with Contract Clause 52.243-4 entitled CHANGES.

3.8 Phased or "Fast-Track" Design

3.8.1 General

If approved by the Government, design and construction sequencing may be effected on an incremental basis as each approved phase or portion (e.g., demolition, geotechnical, site work, exterior utilities, foundations, substructure, superstructure, exterior closure, roofing, interior construction, mechanical, electrical, etc.) of the design is completed.

3.8.1.1 Design Phases

Complete or partial design phasing may or may not have been specified by the Government elsewhere in this contract. For construction sequencing or phasing that the Government has not specifically mandated, the Design-Build Contractor may submit a proposed phasing plan. Design phasing proposed by the Design-Build Contractor shall be submitted to the Government for approval in accordance with TAC Form 122-E CONTRACTOR FURNISHED DESIGN DOCUMENTS.

3.8.2 Sequence of Design-Construction (Fast-Track)

After receipt of the Contract Notice to Proceed (NTP) the Contractor shall initiate design, comply with all design submission requirements and obtain Government review of each submission. The contractor may begin construction on portions of the work for which the Government has reviewed the final design submission and has determined satisfactory for purposes of beginning construction. The Contracting Officer will notify the Contractor when the design is cleared for construction. The Government will not grant any time extension for any design resubmittal required when, in the opinion of the Government, the initial submission failed to meet the minimum quality requirements as set forth in the contract.

3.8.3 Notice-to-Proceed for Limited Construction

If the Government allows the Contractor to proceed with limited construction based on pending minor revisions to the reviewed Final Design submission, no payment will be made for any in-place construction related to the pending revisions until they are completed, resubmitted and are satisfactory to the Government.

3.8.4 In-Place Construction Payment

No payment will be made for any in-place construction until all required submittals have been made, reviewed and are satisfactory to the Government.

3.8.5 Commencement of Construction

Construction of work may begin after receipt of the clearance for construction (Notice to Proceed) for each design phase. Any work performed by the Contractor prior to receipt of the clearance for construction, shall be at the Contractor's own risk and expense. Work cleared for construction that does not conform to the design parameters and/or requirements of this contract shall be corrected by the Contractor at no additional cost or time to the Government.

3.9 DESIGN STAGES

The Contractor shall schedule the number and composition of the design submittal phases. Design submittals are required at the Concept (35%) and Final 99% design stages and at the 100% Ready-to-Advertise stage. The requirements of each design stage are listed hereinafter. The number and contents of the design submittals phases shall be reflected in TAC Form 122-E as well as in the Contractor's design progress schedule.

3.9.1 Concept Review Submittal (35%)

The review of this submittal is primarily to ensure that the Contractor has taken an inventory of the existing conditions at each proposed site, has established the most desirable functional relationships between the various project elements, has provided the technical solution to how the functional and technical requirements will be met, and to show Contractor compliance (or justify noncompliance) with the design parameters and/or requirements. Refer to requirements herein for specific submittal requirements. The following documents shall be submitted:

Site topographic survey
Grading plan
35% drawings for site plan, grading, utilities
35% drawings for buildings, facilities
List of Specification Sections to be used
Preliminary design analysis

3.9.2 Final Review Submittal 100%

The review of this submittal is to insure that the design is in accordance with directions provided the Contractor during the design process. The only effort remaining between the FINAL DESIGN REVIEW SUBMITTAL and the "CLEARED FOR CONSTRUCTION" DESIGN REVIEW SUBMITTAL is the incorporation of the Government Review Comments. The Contractor shall submit the following documents for Final review:

a. Design Analysis, developed to a 99% design stage. The Design Analysis shall be in its final form. It shall include all backup material previously submitted and revised as necessary. All design calculations shall be included. The Design Analysis shall contain all explanatory material giving the design rationale for any design decisions which would not be obvious to an engineer reviewing the Final Drawings and Specifications.

b. 99% Complete Construction Specifications. The Draft Specifications on all items of work submitted for Final Review shall consist of marked-up proprietary specifications.

c. 99% Complete Construction Drawings. The Contract Drawings submitted for Final Review shall include the drawings previously submitted which have been revised and completed as necessary. The Contractor is expected to have completed all of his coordination checks and have the drawings in a design complete condition. The drawings shall be finalized at this time including the incorporation of any design review comments generated by the Preliminary design review. The drawings shall contain all the details necessary to assure a clear understanding of the work throughout construction.

d. The Government's 35% and 100% Design Review Comments with the Contractor's annotation to each comment.

3.9.4 "Cleared for Construction" Design Review Submittal (100%)

After the FINAL DESIGN REVIEW SUBMITTAL review, the Contractor shall revise the Contract Documents by incorporating any comments generated during the FINAL DESIGN REVIEW SUBMITTAL and shall prepare final hard copy Construction Specifications. The Contractor shall submit the following documents for the design complete submittal:

a. Design Analysis

b. Construction Specifications

c. Construction Drawings

d. A soft copy (CD) of the design drawings, specifications, and design analysis shall be submitted at this stage and all other subsequent stages of the design process.

e. The Government's FINAL (99%) DESIGN REVIEW SUBMITTAL comments with the Contractor's annotation to each comment.

Once the design documents have been "Cleared for Construction" by the Contracting Officer, the Design-Build Contractor shall clearly identify each document by annotating it as "Cleared for Construction."

3.9.5 Partial Design Submittals

In the interest of expediting construction, the Contracting Officer may approve partial design submittals, procurement of materials and equipment, as well as issue the Notice To Proceed (NTP) for construction of those elements of the design which have been cleared for construction. Such partial notices to proceed shall be solely at the discretion of the Contracting Officer.

3.9.6 Design Submittals not in compliance with the contract documents

The Contractor shall, without additional compensation, correct or revise any errors or deficiencies in its design analysis, specifications, and drawings, and promptly furnish a corrected submittal in the form and number of copies as specified for the initial submittal. No part of the time lost due to such resubmissions shall be made the subject of claim for extension of time or for excess costs or damages by the Contractor. If the Contractor considers any correction indicated on the submittals to constitute a change to the contract, a notice shall be given promptly to the Contracting Officer.

3.10 GENERAL DESIGN INSTRUCTIONS

3.10.1 Responsibility of the Design-Build Contractor

3.10.1.1 Professional Quality, Technical Accuracy, and Coordination

The Design-Build Contractor shall be responsible for the professional quality, technical accuracy, and the coordination of all design specifications, drawings, and other services furnished under this contract. Work must be organized in a manner that will assure thorough coordination between various details on drawings, between the various sections of the specifications, and between the drawings and specifications. The Design-Build Contractor shall thoroughly cross-check and coordinate all work until he is professionally satisfied that no conflicts exist, vital information has not been omitted, and that indefinite language open to interpretation has been resolved.

3.10.1.2 Deviating From The “Cleared-For-Construction” Design

(a.) The Contractor must obtain the approval of the Designer of Record (DOR) and the Government’s concurrence for any Contractor proposed revision to the

professionally stamped and sealed design reviewed and Cleared for Construction by the Government, before proceeding with the revision.

(b.) The Government reserves the right to non-concur with any revision to the design, which may impact furniture, furnishings, equipment selections or operations decisions that were made, based on the reviewed and cleared for construction design.

(c.) Any revision to the design, which deviates from the contract requirements (i.e., the RFP and the accepted proposal), will require a modification, pursuant to the Changes clause, in addition to Government concurrence. The Government reserves the right to disapprove such a revision.

(d.) Unless the Government initiates a change to the contract requirements, or the Government determines that the Government furnished design criteria are incorrect and must be revised, any Contractor initiated proposed change to the contract requirements, which results in additional cost, shall strictly be at the Contractor's expense.

(e.) The Contractor shall track all approved revisions to the reviewed and cleared for construction design and shall incorporate them into the as-built design documentation, in accordance with section 01060 SC entitled PREPARATION OF AS-BUILT DRAWINGS (CONTRACTOR). The Designer of Record shall document its professional concurrence on the As-Builts for any revisions by affixing its stamp and seal on the drawings and specifications.

3.10.1.3 Government Oversight

The extent and character of the work to be done by the Design-Build Contractor shall be subject to the general oversight, supervision, direction, control, and review by the Contracting Officer.

3.10.1.4 Unlimited Drawing Rights

The Government shall have unlimited rights in all drawings, designs, specifications, notes and all other works developed in the performance of this contract, including the right to use same on any other Government design or construction without additional compensation to the Design-Build Contractor. The Design-Build Contractor hereby grants to the Government a paid-up license throughout the world to all such works to which he may assert or establish any claim under design patent or copyright laws.

3.10.1.5 Conflicts

Any conflicts, ambiguities, questions or problems encountered by the Design-Build Contractor in following the criteria shall be immediately submitted in writing to the Contracting Officer with the Design-Build Contractor's recommendations. Prior to

submission to the Government the Design-Build Contractor shall take appropriate measures to obtain clarification of design criteria requirements, to acquire all pertinent design information, and to incorporate such information in the work being performed.

3.10.1.6 Design Specialists

Whenever a design specialist is required, the Design-Build Contractor shall submit for the approval by Contracting Officer, the name of the designated specialist along with the individual's educational background, experience, and licenses or registrations held, before design work commences. The design specialists shall be registered architects, registered professional engineers, or recognized consultants with a background of at least five (5) years design experience in the appropriate specialty. Services of design specialists may be required for the following specialties:

Fire Protection	Landscape Design
Medical Design	Stage/Theater Design
Acoustical Design	Interior Design
Educational Design	Security
Telecommunications	Audio Visual, PA, TV, etc.
Geotechnical Design	Hardened Structures
Asbestos Abatement	X-Ray Shielding
EMF Shielding	Site grading

3.10.2 Conduct of Work

In the performance of contract the Design-Build contractor shall:

3.10.2.1 Performance

Perform the work diligently and aggressively, and promptly advise the Contracting Officer of all significant developments.

3.10.2.2 Telephone Conversations

Prepare a summary, and promptly furnish a copy thereof to the Contracting Officer, of all telephone conversations relating to the design work under this contract.

3.10.2.3 Cooperation with Others

Cooperate fully with other firms, consultants and contractors performing work under the program to which this contract pertains, upon being advised by the Contracting Officer that such firms or individuals have a legitimate interest in the program, have need-to-know status, and proper security clearance where required.

3.10.2.4 Technical Criteria

All designs, drawings, and specifications shall be prepared in accordance with the contract documents and with the applicable publications referenced therein. As soon as possible, the Design-Build Contractor shall obtain copies of all publications applicable to this contract. Availability of publications (where to purchase) is contained in Specification Section 01420 entitled: SOURCES FOR REFERENCE PUBLICATIONS. Any deviations from the technical criteria contained in the contract documents or in the applicable publications, including the use of criteria obtained from the user or other sources, must receive prior approval of the Contracting Officer. Where the technical criteria contained or referred to herein are not met, the Design-Build Contractor will be required to conform his design to the same at his own time and expense.

3.10.3 Design Priorities

The design of this project shall consider the remote location and harsh environment of this project and the impact this will have on sources of technical supply, the cost of construction, the low level of maintenance, and the difficulty of obtaining replacement parts. Unless stated otherwise in this contract, the following design priorities shall be followed:

3.10.3.1 CONSTRUCTION LIFE-SPAN LEVELS

Permanent Construction. Buildings and facilities shall be designed and constructed to serve a life expectancy of more than 25 years, to be energy efficient, and to have finishes, materials, and systems that are low maintenance and low life-cycle cost.

Semi permanent Construction. Buildings and facilities shall be designed and constructed to serve a life expectancy of more than 5 years but less than 25 years, to be energy efficient, and to have finishes, materials, and systems that require a moderate degree of maintenance using the life-cycle cost approach.

Temporary Construction. Buildings and facilities shall be designed and constructed to serve a life expectancy of 2 years or less using low-cost construction, with finishes, materials, and systems that are selected with maintenance factors being a secondary consideration.

Mobilization, Emergency and Contingency Operations Construction. Buildings and facilities shall be designed and constructed to serve a specific mobilization or emergency requirement. Buildings will be austere to minimize construction time and maximize conservation of critical materials. Maintenance factors and longevity will be secondary considerations.

3.10.3.2 Operability

Systems including but not necessarily limited to mechanical, electrical, communications, etc., must be simple to operate and easy to maintain.

3.10.3.3 Standardization

Use of standardized materials, products, equipment, and systems is necessary to minimize the requirements for replacement parts, storage facilities, and service requirements.

3.10.3.4 Overseas Work

Use of construction materials or techniques shall be utilized which are suitable for overseas work in harsh climates and environments.

3.10.4 Topographic Surveys, Easements, and Utilities

Unless otherwise stated in the contract, the Design-Build Contractor will be responsible for detailed topographic mapping, available easements, and utility information for the project.

3.10.4.1 Horizontal and Vertical Control

The mapping shall be based on the base coordinate system. If the base system cannot be found, the surveyor shall use any established monuments. If monuments have been destroyed or do not exist, an assumed horizontal and vertical datum shall be established, using arbitrary coordinates of 10,000n and 10,000e and an elevation of 1,000 meters. The horizontal and vertical control established on site shall be a closed loop with third order accuracy and procedures. Provide three (3) concrete survey monuments at the survey site. All of the control points established at the site shall be plotted at the appropriate coordinate point and shall be identified by name or number, and adjusted elevations. The location of the project site, as determined by the surveyor shall be submitted in writing to the Contracting Officer. The site location shall be identified by temporary markers, approved by the Contracting Officer before proceeding with the surveying work.

3.10.4.2 Topography Requirements

A sufficient quantity of horizontal and vertical control shall be established to provide a detailed topographic survey at 1:500 scale with one quarter meter contour intervals minimum. Intermediate elevations shall be provided as necessary to show breaks in grade and changes in terrain.

The contours shall accurately express the relief detail and topographic shapes. In addition, 90 percent of the elevations or profiles interpolated from the contours shall be correct to within one-half of the contour interval and spot elevations shall be correct within plus or minus 20 millimeters.

Spot elevations affecting design of facilities shall be provided. Specifically, break points or control points in grades of terrain such as tops of hills, bottoms of ditches and gullies, high bank elevations, etc.

All surface and sub-surface structures features within the area to be surveyed shall be shown and identified on the topographic maps. In addition, these features shall be located by sufficient distance ties and labeled on the topographic sheets to permit accurate scaling and identification.

The location and sizes of potable, sanitary, electrical and mechanical utilities within the survey site shall be shown on the survey map. Sanitary manholes and appurtenances shall show top elevations and invert elevations.

3.10.5 Geotechnical Investigation

Unless otherwise stated in the contract, the Design-Build Contractor will be responsible for Geotechnical investigation, including subsurface explorations, sampling, field and laboratory testing, and water studies where applicable.

3.10.6 Cathodic Protection and Earth Resistance

Unless otherwise stated in the contract, the Design-Build Contractor will be responsible for determining whether cathodic protection on buried structures and underground utility systems are needed for special electrical grounding and counterpoise systems, and for gathering the field data necessary for design.

3.10.7 Water Supply and Quality Data

Unless otherwise stated in the contract, the Design-Build Contractor will be responsible for obtaining all water supply and water quality data. This data will include information on the locations and depths of all viable water supply sources at the site(s) involved and a water quantity and water quality analysis for each source.

3.10.8 Occupational Safety and Health Act

The facilities, systems, and equipment designed under this contract shall comply with the Occupational Safety and Health Act (OSHA), Code of Federal Regulations, Title 29, Chapter XVII, Parts 1910 and 1926. Any problems in incorporating these standards due to conflicts with other technical criteria shall be submitted to the Contracting Officer for resolution.

3.10.9 Asbestos Containing Materials

Asbestos containing material (ACM) will not be used in the design of new structures or systems. In the event no other material is available which will perform the required function or where the use of other material would be cost prohibitive, a waiver for the use of asbestos containing materials must be obtained from CETAC.

3.10.9.1 Existing Construction

Asbestos containing materials (ACM) presently included in existing construction to be rehabilitated or otherwise modified as a result of this project, shall be removed and a non-asbestos containing material substituted in lieu thereof.

3.10.9.2 Suspected Asbestos Containing Materials

All such structures and systems shall be inspected to determine the presence or probable presence of ACM. When ACM is suspected, a documented survey will be performed. The survey will be developed into an abatement design and will be made a part of the design documents. In the event no other material is available which will perform the required function or the use of a substitute material would be cost prohibitive due to initial cost and tear-out of existing construction, a waiver for the retention of the asbestos containing material must be obtained from the Contracting Officer.

3.11 VALUE METHODOLOGY/VALUE ENGINEERING

The Design-Build Contractor during the course of his design shall be alert for and shall identify those high-cost low-value items or areas which he considers may be accomplished in different ways that will increase the value of the project at the same or less cost. Potential value engineering study items shall be reported to the Value Engineer through the Contracting Officer.

3.11.1 Performance Oriented Value Engineering Change Proposal (VECP)

In reference to Contract Clause 52.248-3, "Value Engineering - Construction", the Government may refuse to entertain a "Value Engineering Change Proposal" (VECP) for those "performance oriented" aspects of the Contract Documents which were addressed in the Design-Build Contractor's accepted contract proposal and which were evaluated in competition with other Proposers for award of this contract. For purposes of this clause, the term "performance oriented" refers to those aspects of the design criteria or other contract requirements which allow the Proposer or the Design-Build Contractor certain latitude, choice of and flexibility to propose in its accepted contract offer a choice of design, technical approach, design solution, construction approach or other approach to fulfill the contract requirements. Such requirements generally tend to be expressed in terms of functions to be performed, performance required or essential physical characteristics, without dictating a specific process or specific design solution for achieving the desired result.

3.11.2 Prescriptive Oriented Value Engineering Change Proposal (VECP)

The Government may consider a VECP for those "prescriptive" aspects of the Solicitation documents, not addressed in the Design-Build Contractor's accepted

contract proposal or addressed but evaluated only for minimum conformance with the Solicitation requirements. For purposes of this clause, the term "prescriptive" refers to those aspects of the design criteria or other Solicitation requirements wherein the Government expressed the design solution or other requirements in terms of specific materials, approaches, systems and/or processes to be used. Prescriptive aspects typically allow the Proposers little or no freedom in the choice of design approach, materials, fabrication techniques, methods of installation or other approach to fulfill the contract requirements.

3.12 SUBMITTAL OF CONTRACTOR FURNISHED DESIGN DOCUMENTS

The requirements of this paragraph pertain to the submittal of design documents, specifications, design calculations, surveys, testing reports and other documents prepared by the Design-Build Contractor to meet the design requirements of this project.

3.12.1 Geo-technical

3.12.1.1 Design Analysis

The Design-Build Contractor shall submit in the design analysis catalog cuts, manufacturer's data for the following:

3.12.1.2 Specifications

Specifications for all civil utilities shall include:

3.12.1.3 Design Drawings

1 ea. Full Size, 2 ea. Half-Size Design drawings shall be submitted for the following:

Afghanistan Engineer District (AED)

3.12.1.4 Manufacturer's recommendations, instructions, and certifications

Shall be submitted for the following:

Afghanistan Engineer District (AED)

3.12.1.5 Samples

Samples shall be submitted for the following:

Afghanistan Engineer District (AED)

3.12.1.6 Schedules

Schedules shall be submitted for the following:

Afghanistan Engineer District (AED)

3.12.1.7 Reports

Reports shall be submitted for the following:

Afghanistan Engineer District (AED)

3.12.1.8 Records

Records shall be submitted for the following:

Afghanistan Engineer District (AED)

Engineering Studies: Occasionally, in addition to the items previously mentioned, engineering studies that relate to specific problems or surveys may be required. The necessary instructions regarding the preparation of such reports must be added by the Specification Writer as appropriate.

3.12.2 Civil, Site Planning and Layout

3.12.3 Water, Wastewater, and Solid Waste Systems

3.12.4 Architectural/Interior Design

3.12.5 Structural

3.12.6 Force Protection Design Procedures for the Protection of United States Forces

3.12.7 Fire Protection and Life Safety

3.12.8 Heating, Ventilating, and Air Conditioning

3.12.9 Plumbing

3.12.10 Special Mechanical Systems and Equipment

3.12.11 Electrical

3.12.12 Power Generation

3.12.13 Power Transmission and Distribution

3.12.14 Communications

3.12.15 Corrosion Prevention and Control

3.12.16 Renovation Design

3.12.17 Accident Prevention and Safety

3.13 SUBMITTAL OF CONTRACTOR FURNISHED DESIGN DRAWINGS

3.13.1 Geo-technical

3.13.2 Civil, Site Planning and Layout

3.13.3 Water, Wastewater, and Solid Waste Systems

3.13.4 Architectural/Interior Design

3.13.5 Structural

3.13.6 Force Protection Design Procedures for the Protection of United States Forces

3.13.7 Fire Protection and Life Safety

3.13.8 Heating, Ventilating, and Air Conditioning

3.13.9 Plumbing

3.13.10 Special Mechanical Systems and Equipment

3.13.11 Electrical

3.13.12 Power Generation

3.13.13 Power Transmission and Distribution

3.13.14 Communications

3.13.15 Corrosion Prevention and Control

3.13.16 Renovation Design

3.13.17 Accident Prevention and Safety

3.14 GOVERNMENT APPROVED CONSTRUCTION SUBMITTALS (Required During Construction)

3.14.1 General

Since this contract requires that the drawings and specifications specify specific proprietary materials, equipment, systems, and patented processes by trade name, make, or catalog number, it is anticipated that construction shop drawings will primarily be limited to testing, construction plans (e.g., Contractor Quality Control, Accident Prevention, Resident Management System, Area Use etc), schedules (Project Schedule/Network Analysis), certificates of compliance, reports, records/statements and variations.

3.14.1.1 Variations

After design submittals have been reviewed and cleared for construction by the Contracting Officer, no submittal for the purpose of substituting materials, equipment, systems, and patented processes will be considered by the Government unless submitted in accordance with the paragraph entitled VARIATIONS.

3.14.1.2 Additional Shop Drawings and Submittals

In accordance with the paragraph entitled DESIGN DISCREPANCIES, the Government may request the Design-Build Contractor to provide additional shop drawing and submittal type data subsequent to completion of the design.

3.14.2 Incomplete Design

The Design-Build Contractor shall not use construction submittals as a means to supplant and/or supplement an incomplete design effort.

3.14.3 Government Approval of Construction Submittals

The approval of construction submittals by the Contracting Officer shall not be construed as a complete check, but will indicate only that the general method of design construction, materials, detailing and other information are satisfactory. Approval will not relieve the Design-Build Contractor of the responsibility for any error which may exist, as it is the sole responsibility of the Design-Build Contractor to certify that each submittal has been reviewed in detail and is in strict conformance with all the contract documents and design criteria referenced therein.

Virtually all design related construction submittals can and must be incorporated directly into the design specifications and drawings prepared by the Design-Build Contractor. Since the Design-Build Contractor has sole responsibility for the design, procurement, and construction, impediments do not exist which would impair his ability to specifically identify what is being furnished to the Government prior to the start of construction. Generic/non-proprietary specifications are indicative of an incomplete design effort and as such must be rejected as unacceptable

3.14.4 Submittals

Submittals (other than shop drawings) shall be limited to items such as Plans (e.g., Quality Control Plan, Accident Prevention Plan, Area Use Plan etc.),Certificates of Compliance, Installation Instructions, Manufacturer's Catalog Data, Descriptive Literature/Illustrations, Factory and Field Test Reports, Performance and Operational Test Data Reports, Records, Operation and Maintenance Manuals, and required variations.

3.14.5 Government Review

Upon completion of review of construction submittals requiring Government approval, the submittals will be identified as having received approval by being so stamped and dated. two (2) copies of the submittal will be retained by the Contracting Officer and one (1) copy of the submittal will be returned to the Design-Build Contractor.

3.15 FOR INFORMATION ONLY SUBMITTALS

These submittals shall be checked, stamped, signed and dated by the Design-Build Contractor’s Quality Control Engineer, certifying that such submittal complies with the contract requirements. All Contractor submittals shall be subject to review by the Government at any time during the course of the contract. Any Contractor submittal found to contain errors or omissions shall be resubmitted as one requiring "approval". No adjustment for time or money will be allowed for corrections required as a result of noncompliance with plans or specifications. Normally submittals for information only will not be returned. Approval of the Contracting Officer is not required on information only submittals. These submittals will be used for information purposes. The Government reserves the right to require the Design-Build Contractor to resubmit any item found not to comply with the contract. This does not relieve the Design-Build Contractor from the obligation to furnish material conforming to the plans and specifications and will not prevent the Contracting Officer from requiring removal and replacement if nonconforming material is incorporated in the work.

3.16 ATTACHMENTS

The following attachments form an integral part of this specification:

ENG FORM 4025 - Transmittal of Shop Drawings, Equipment Data, Material Samples, or Manufacturer's Certificate of Compliance (2 pages)

TAC FORM 122-E - Contractor Furnished Design Documents Submittal Register

ENG FORM 4288 - Submittal Register

Select one of the following:

AED projects:

Figure 1 – From AEC CADD Standards all sheet/number description; AED title block

Figure 2 - From AEC CADD Standards all A-E logo/designed by/submitted by; AED title block

Figure 3 - From AEC CADD Standards all revision block; AED title block

Figure 4 - From AEC CADD Standards all Finished Format Size

-- End of Section -

SECTION 01415

SECTION 01415

METRIC MEASUREMENTS

1.1 REFERENCES

The publications listed below form a part of this specification to the extent referenced. The publications are referred to within the text by the basic designation only.

ASTM INTERNATIONAL (ASTM)

ASTM E 621	(1994; R 1999e1) Use of Metric (SI) Units in Building Design and Construction (Committee E-6 Supplement to E380)
ASTM SI 10	(2002) American National Standard for Use of the International System of Units (SI): The Modern Metric System

1.2 GENERAL

This project includes metric units of measurements. The metric units used are the International System of Units (SI) developed and maintained by the General Conference on Weights and Measures (CGPM); the name International System of Units and the international abbreviation SI were adopted by the11th CGPM in 1960. A number of circumstances require that both metric SI units and English inch-pound (I-P) units be included in a section of the specifications. When both metric and I-P measurements are included, the section may contain measurements for products that are manufactured to I-P dimensions and then expressed in mathematically converted metric value(soft metric) or, it may contain measurements for products that are manufactured to an industry recognized rounded metric (hard metric)dimensions but are allowed to be substituted by I-P products to comply with the law. Dual measurements are also included to indicate industry and/or Government standards, test values or other controlling factors, such as the code requirements where I-P values are needed for clarity or to trace back to the referenced standards, test values or codes.

1.3 USE OF MEASUREMENTS IN SPECIFICATIONS

Measurements in specifications shall be either in SI or I-P units as indicated, except for soft metric measurements or as otherwise authorized. When only SI or I-P measurements are specified for a product, the product shall be procured in the specified units (SI or I-P) unless otherwise authorized by the Contracting Officer. The Contractor shall be responsible for all associated labor and materials when authorized to substitute one system of units for another and for the final assembly and performance of the specified work and/or products.

1.3.1 Hard Metric

A hard metric measurement is indicated by an SI value with no expressed correlation to an I-P value. Hard metric measurements are often used for field data such as distance from one point to another or distance above the floor. Products are considered to be hard metric when they are manufactured to metric dimensions or have an industry recognized metric designation.

1.3.2 Soft Metric

(3) A soft metric measurement is indicated by an SI value which is a mathematical conversion of the I-P value shown in parentheses (e.g. 38.1 mm (1-1/2 inches)). Soft metric measurements are used for measurements pertaining to products, test values, and other situations where the I-P units are the standard for manufacture, verification, or other controlling factor. The I-P value shall govern while the metric measurement is provided for information.

(4) A soft metric measurement is also indicated for products that are manufactured in industry designated metric dimensions but are required by law to allow substitute I-P products. These measurements are indicated by a manufacturing hard metric product dimension followed by the substitute I-P equivalent value in parentheses (e.g., 190 x 190 x 390 mm (7-5/8 x 7-5/8 x 15-5/8inches)).

1.3.3 Neutral

A neutral measurement is indicated by an identifier which has no expressed relation to either an SI or an I-P value (e.g., American Wire Gage (AWG) which indicates thickness but in itself is neither SI nor I-P).

1.4 COORDINATION

Discrepancies, such as mismatches or product unavailability, arising from use of both metric and non-metric measurements and discrepancies between the measurements in the specifications and the measurements in the drawings shall be brought to the attention of the Contracting Officer for resolution.

1.5 RELATIONSHIP TO SUBMITTALS

Submittals for Government approval or for information only shall cover the SI or I-P products actually being furnished for the project. The Contractor shall submit the required drawings and calculations in the same units used in the contract documents describing the product or requirement unless otherwise instructed or approved. The Contractor shall use ASTM SI 10 and ASTM E 621 as the basis for establishing metric measurements required to be used in submittals.

-- End of Section --

SECTION 01451

SPECIFICATION SECTION 01451

CONTRACTOR QUALITY CONTROL

PART 1: GENERAL

1.1 REFERENCES

The publications listed below form a part of this specification to the extent referenced. The publications are referred to within the text by the basic designation only.

U.S. ARMY CORPS OF ENGINEERS (USACE)

ER 1110-1-12 (1993)	Quality Management
EM 385-1-1	Safety and Health Requirements Manual

1.2 PAYMENT

Separate payment will not be made for providing and maintaining an effective Quality Control program, and all costs associated therewith shall be included in the applicable unit prices or lump-sum prices contained in the Bidding Schedule.

PART 2PRODUCTS (Not Applicable)

PART 3EXECUTION

3.1 GENERAL REQUIREMENTS

The Contractor is responsible for quality control and shall establish and maintain an effective quality control system in compliance with the Contract Clauses and this specification section. The quality control system shall consist of plans, procedures, and organization necessary to produce an end product which complies with the contract requirements. The system shall cover all construction operations, both onsite and offsite, and shall be keyed to the proposed construction sequence. The site project superintendent will be held responsible for the quality of work on the job and is subject to removal by the Contracting Officer for non-compliance with the quality requirements specified in the contract. The site project superintendent in this context shall be the highest level manager

responsible for the overall construction activities at the site, including quality and production. The site project superintendent shall maintain a physical presence at the site at all times, except as otherwise acceptable to the Contracting Officer, and shall be responsible for all construction and construction related activities at the site.

3.2 CQM TRAINING REQUIREMENT

Before project design and construction begin, the Contractor's Quality Control Manager is required to have completed the U.S. Army Corps of Engineers CQM course, or equivalent. The Construction Trades Training Center (CTTC) in Jalalabad, Afghanistan provides a course that satisfies the requirement. Courses are offered at regular intervals. For enrollment and course information contact CTTC at the following:

Mhd. Haris
e-mail: mharis@afghanreconstruction.org
Telephone: 0700 08 0602

Pervaiz
e-mail: adpzmuj@yahoo.com
Telephone: 0700 61 3133

3.3 QUALITY CONTROL PLAN

The Contractor shall furnish for review by the Government, not later than five (5) days after receipt of Notice-to-Proceed (NTP) the proposed Contractor Quality Control (CQC) Plan. The plan shall identify personnel, procedures, control, instructions, records, and forms to be used.

3.2.1 Content of the CQC Plan

The CQC Plan shall include, as a minimum, the following to cover all construction operations, both on site and off-site, including work by subcontractors, fabricators, suppliers and purchasing agents:

a. A description of the quality control organization, including a chart showing lines of authority and acknowledgment that the CQC staff shall implement the three phase control system for all aspects of the work specified. The staff shall include a CQC System Manager who shall report to the project superintendent.

b. The name, qualifications (in resume format), duties, responsibilities, and authorities of each person assigned a CQC function.

c. A copy of the letter to the CQC System Manager signed by an authorized official of the firm which describes the responsibilities and delegates sufficient authorities to adequately perform the functions of the CQC System Manager, including authority to stop work which is not in compliance with the contract. The CQC System Manager shall issue letters of direction to all other various quality control representatives outlining duties, authorities, and responsibilities. Copies of these letters shall also be furnished to the Government.

d. Procedures for scheduling, reviewing, certifying, and managing submittals, including those of subcontractors, offsite fabricators, suppliers, consultants, and purchasing agents. These procedures shall be in accordance with Specification 01335 SUBMITTAL PROCEDURES.

e. Control, verification, and acceptance testing procedures for each specific test to include the test name, specification paragraph requiring test, feature of work to be tested, test frequency, and person responsible for each test.

f. Procedures for tracking preparatory, initial, and follow-up control phases and control, verification, and acceptance tests including documentation.

g. Procedures for tracking construction deficiencies from identification through acceptable corrective action. These procedures shall establish verification that identified deficiencies have been corrected.

h. Reporting procedures, including proposed reporting formats.

i. A list of the definable features of work. A definable feature of work is a task which is separate and distinct from other tasks, has separate control requirements, and may be identified by different trades or disciplines, or it may be work by the same trade in a different environment. Although each section of the specifications may generally be considered as a definable feature of work, there are frequently more than one definable features under a particular section. This list will be agreed upon during the coordination meeting.

3.2.2 Additional Requirements for Design Quality Control (DQC) Plan

The following additional requirements apply to the Design Quality Control

(DQC) plan:

(1) The Contractor shall provide and maintain a Design Quality Control (DQC) Plan as an effective quality control program which will assure that all services required by this design contract are performed and provided in a manner that meets professional architectural and engineering quality standards. As a minimum, all documents shall be technically reviewed by competent, independent reviewers identified in the DQC Plan. The same element that produced the product shall not perform the independent technical review (ITR). The Contractor shall correct errors and deficiencies in the design documents prior to submitting them to the Government.

(2) The Contractor shall include the design schedule in the master project schedule, showing the sequence of events involved in carrying out the project design tasks within the specific contract period. This should be at a detailed level of scheduling sufficient to identify all major design tasks, including those that control the flow of work. The schedule shall include review and correction periods associated with each item. This should be a forward planning as well as a project monitoring tool. The schedule reflects calendar days and not dates for each activity. If the schedule is changed, the Contractor shall submit a revised schedule reflecting the change within 7 calendar days. The Contractor shall include in the DQC Plan the discipline-specific checklists to be used during the design and quality control of each submittal. These completed checklists shall be submitted at each design phase as part of the project documentation. Example checklists can be found in ER 1110-1-12.

(3) The DQC Plan shall be implemented by an Design Quality Control Manager who has the responsibility of being cognizant of and assuring that all documents on the project have been coordinated. This individual shall be a person who has verifiable engineering or architectural design experience and is a registered professional engineer or architect. The Contractor shall notify the Contracting Officer, in writing, of the name of the individual, and the name of an alternate person assigned to the position.

The Contracting Officer will notify the Contractor in writing of the acceptance of the DQC Plan. After acceptance, any changes proposed by the Contractor are subject to the acceptance of the Contracting Officer.

3.2.3 Acceptance of Plan

Acceptance of the Contractor's plan is required prior to the start of construction. Acceptance is conditional and will be predicated on satisfactory performance during the construction. The Government reserves the right to require the Contractor to make changes in the CQC plan and operations including removal of personnel, as necessary, to obtain the quality specified.

3.2.4 Notification of Changes

Notification of Changes: After acceptance of the QC plan, the Contractor shall notify the Contracting Officer in writing a minimum of seven calendar days prior to any proposed change. Proposed changes are subject to acceptance by the Contracting Officer.

3.3 COORDINATION MEETING

After the Pre-construction Conference, before start of construction, and prior to acceptance by the Government of the Quality Control Plan, the Contractor shall meet with the Contracting Officer or Authorized Representative and discuss the Contractor's quality control system. The CQC Plan shall be submitted for review a minimum of 5 calendar days prior to the Coordination Meeting. During the meeting, a mutual understanding of the system details shall be developed, including the forms for recording the CQC operations, control activities, testing, administration of the system for both on-site and off-site work, and the interrelationship of Contractor's Management and control with the Government's Quality Assurance. Minutes of the meeting shall be prepared by the Government and signed by both the Contractor and the Contracting Officer. The minutes shall become a part of the contract file. There may be occasions when subsequent conferences will be called by either party to reconfirm mutual understandings and/or address deficiencies in the CQC system or procedures, which may require corrective action by the Contractor.

3.4 QUALITY CONTROL ORGANIZATION

3.4.1 Personnel Requirements

The requirements for the CQC organization are a CQC System Manager, and sufficient number of additional qualified personnel to ensure safety and contract compliance. Personnel identified in the technical provisions as requiring specialized skills to assure the required work is being performed properly will also be included as part of the CQC organization. The Contractor's CQC staff shall maintain a presence at the site at all times during progress of the work and have complete authority and responsibility to take any action necessary to ensure contract compliance. The CQC staff shall be subject to acceptance by the Contracting Officer. The Contractor shall provide adequate office space, filing systems and other resources as necessary to maintain an effective and fully functional CQC organization. Complete records of all letters, material submittals, shop drawing submittals, schedules and all other project documentation shall be promptly furnished to the CQC organization by the Contractor. The CQC organization shall be responsible to maintain these documents and records at the site at all times, except as otherwise acceptable to the Contracting Officer.

3.4.2 CQC System Manager

The Contractor shall identify an individual within his organization at the site of the work who shall be responsible for overall management of the CQC and have the authority to act in all CQC matters for the Contractor. The CQC system manager shall be a graduate engineer, graduate architect, or a graduate construction manager, with experience on construction projects similar in type to this contract OR a construction person with a minimum of ten (10) years in related work. The CQC System Manager shall be on the site at all times during construction and shall be employed by the Contractor. The CQC System Manager shall be assigned no other duties. An alternate for the CQC System Manager will be identified in the plan to serve in the event of the CQC system manager's absence. The requirements for the alternate will be the same as for the designated CQC manager.

3.4.3 Not Used.

3.4.4 Additional Requirement

In addition to the above experience and/or education requirements, the CQC System Manager shall have completed the course entitled "Construction Quality Management For Contractors". This course is periodically offered by the government, and inquiries as to the next course offering may be directed to the local construction field office.

3.4.5 Organizational Changes

The Contractor shall maintain the CQC staff at full strength at all times. When it is necessary to make changes to the CQC staff, the Contractor shall revise the CQC Plan to reflect the changes and submit the changes to the Contracting Officer for acceptance.

3.5 SUBMITTALS AND DELIVERABLES

Submittals, if needed, shall be made as specified in the STR titled SUBMITTAL PROCEDURES. The CQC organization shall be responsible for certifying that all submittals and deliverables are in compliance with the contract requirements.

3.6 CONTROL

Contractor Quality Control is the means by which the Contractor ensures that the construction, to include that of subcontractors and suppliers, complies with the requirements of the contract. At least three phases of control shall be conducted by the CQC System Manager for each definable feature of the construction work as follows:

3.6.1 Preparatory Phase.

This phase shall be performed prior to beginning work on each definable feature of work, after all required documents and materials are approved/accepted, and after copies are at the work site. This phase shall include:

a. A review of each paragraph of applicable specifications, reference codes, and standards. A copy of those sections of referenced codes and standards, in the English language unless specifically approved otherwise by the Contracting Officer, applicable to that portion of the work to be accomplished in the field shall be made available by the Contractor at the preparatory inspection. These copies shall be maintained in the field and available for use by Government personnel until final acceptance of the work.

b. A review of the contract drawings.

c. A check to assure that all materials and/or equipment have been tested, submitted, and approved.

d. A check to assure that provisions have been made to provide required control inspection and testing.

e. Examination of the work area to assure that all required preliminary work has been completed and is in compliance with the contract.

f. A physical examination of required materials, equipment, and sample work to verify that they are on hand, conform to approved shop drawings or submitted data, and are properly stored.

g. Reviews of the appropriate activity hazard analysis to ensure safety requirements are met.

h. Discussion of procedures for constructing the work including repetitive deficiencies, construction tolerances and workmanship standards for that feature of work.

i. A check to ensure that the Contracting Officer has accepted the portion of the plan for the work to be performed.

j. Discussion of the initial control phase.

k. The Government shall be notified at least 24 hours in advance of beginning any of the required action of the preparatory phase. This phase shall include a meeting conducted by the CQC system manager and attended by the superintendent, other CQC personnel (as applicable), and the foreman responsible for the definable feature. The results of the preparatory phase actions shall be documented by separate minutes prepared by the CQC system manager and attached to the daily QC report. The Contractor shall instruct applicable workers as to the acceptable level of workmanship required in order to meet contract specifications.

3.6.2 Initial Phase.

This phase shall be accomplished at the beginning of a definable feature of work. The following shall be accomplished:

a. A check of preliminary work to ensure that it is in compliance with contract requirements. Review minutes of the preparatory meeting.

b. Verification of full contract compliance. Verify required control inspection and testing.

c. Establish level of workmanship and verify that it meets minimum acceptable workmanship standards. Compare with sample panels as appropriate.

d. Resolve all differences.

e. Check safety to include compliance with and upgrading of the safety plan and activity hazard analysis. Review the activity analysis with each worker.

f. The Government shall be notified at least 24 hours in advance of beginning the initial phase. Separate minutes of this phase shall be prepared by the CQC system manager and attached to the daily QC report. Exact location of initial phase shall be indicated for future reference and comparison with follow-up phases.

g. The initial phase should be repeated for each new crew to work on-site, or any time acceptable specified quality standards are not being met.

3.6.3 Follow-up Phase.

Daily checks shall be performed to assure continuing compliance with contract requirements, including control testing, until completion of the particular feature of work. The checks shall be made a matter of record in the CQC documentation. Final follow-up checks shall be conducted, and all noted deficiencies corrected, prior to the start of additional features of work that may be affected by the deficient work. The Contractor shall not build upon nor conceal non-conforming work.

3.6.4 Additional Preparatory and Initial Phases

Additional preparatory and initial phases may be required by the Contracting Officer on the same definable features of work if the quality of on-going work is unacceptable; if there are changes in the applicable QC staff or in the on-site production supervision or work crew; if work on a definable feature is resumed after a substantial period of inactivity; or if other problems develop.

3.7 TESTS

3.7.1 Testing Procedure

The Contractor shall perform tests specified or required to verify that control measures are adequate to provide a product that conforms to contract requirements. Upon request, the Contractor shall furnish to the Government duplicate samples of test specimens for possible testing by the Government. Costs incidental to the transportation of samples or materials shall be borne by the Contractor.

Testing includes operation and/or acceptance tests when specified. A list of tests to be performed shall be furnished as a part of the CQC plan. The list shall give the test name, frequency, specification paragraph containing the test requirements, the personnel and laboratory responsible for each type of test, and an estimate of the number of tests required. The Contractor shall perform the following activities and record and provide the following data:

a. Verify that testing procedures comply with contract requirements.

b. Verify that facilities and testing equipment are available and comply with testing standards.

c. Check test instrument calibration data against certified standards.

d. Verify that recording forms and test identification control number system, including all of the test documentation requirements, have been prepared.

e. Results of all tests taken, both passing and failing tests, shall be recorded on the Quality Control report for the date taken. Specification paragraph/item reference, location where tests were taken, and the sequential control number identifying the test will be given. Actual test reports may be submitted later, if approved by the Contracting Officer, with a reference to the test number and date taken. An information copy of tests performed by an off-site or commercial test facility will be provided directly to the Contracting Officer. Failure to submit timely test reports, as stated, may result in nonpayment for related work performed and disapproval of the test facility for this contract.

3.8 COMPLETION INSPECTION

3.8.1 Punch-Out Inspection

Near the end of the work, or any increment of the work established by a time stated in the SPECIAL CONTRACT REQUIREMENTS Clause, "Commencement, Prosecution, and Completion of Work", or by the specifications, the CQC Manager shall conduct an inspection of the work. A punch list of items which do not conform to the approved drawings and specifications shall be prepared and included in the CQC documentation, as required by paragraph DOCUMENTATION. The list of deficiencies shall include the estimated date by which the deficiencies will be corrected. The CQC System Manager or staff shall make a second inspection to ascertain that all deficiencies have been corrected. Once this is accomplished, the Contractor shall notify the Government that the facility is ready for the Government Pre-Final inspection.

3.8.2 Pre-Final Inspection

The Government will perform the pre-final inspection to verify that the facility is complete and ready to be occupied. A Government Pre-Final Punch List may be developed as a result of this inspection. The Contractor's CQC System Manager shall ensure that all items on this list have been corrected before notifying the Government, so that a Final inspection with the customer can be scheduled. Any items noted on the Pre-Final inspection shall be corrected in a timely manner. These inspections and any deficiency corrections required by this paragraph shall be accomplished within the time slated for completion of the entire work or any particular increment of the work if the project is divided into increments by separate completion dates.

3.8.3 Final Acceptance Inspection

The Contractor's Quality Control Inspection personnel, plus the superintendent or other primary management person, and the Contracting Officer's Representative shall be in attendance at the final acceptance inspection. Additional Government personnel including, but not limited to, those from Base/Post Civil Facility Engineer user groups, and major commands may also be in attendance. The final acceptance inspection will be formally scheduled by the Contracting Officer based upon results of the Pre-Final inspection. Notice shall be given to the Contracting Officer at least 14 days prior to the final acceptance inspection and shall include the Contractor's assurance that all specific items previously identified to the Contractor as being unacceptable, along with all remaining work performed under the contract, will be complete and acceptable by the date scheduled for the final acceptance inspection. Failure of the Contractor to have all contract work acceptably complete for this inspection will be cause for the Contracting Officer to bill the Contractor for the Government's additional inspection cost in accordance with the contract clause titled "Inspection of Construction".

3.9 DOCUMENTATION

The Contractor shall maintain current records providing factual evidence that required quality control activities and/or tests have been performed. These records shall include the work of subcontractors and suppliers and shall be on an acceptable form that includes, as a minimum, the following information:

a. Contractor/subcontractor and their area of responsibility.

b. Operating plant/equipment with hours worked, idle, or down for repair.

c. Work performed each day, giving location, description, and by whom. When Network Analysis (NAS) is used, identify each phase of work performed each day by NAS activity number.

d. Test and/or control activities performed with results and references to specifications/drawings requirements. The control phase shall be identified (Preparatory, Initial, Follow-up). List of deficiencies noted, along with corrective action.

e. Quantity of materials received at the site with statement as to acceptability, storage, and reference to specifications/drawings requirements.

f. Submittals and deliverables reviewed, with contract reference, by whom, and action taken.

g. Offsite surveillance activities, including actions taken.

h. Job safety evaluations stating what was checked, results, and instructions or corrective actions.

i. Instructions given/received and conflicts in plans and/or specifications.

j. Contractor's verification statement.

These records shall indicate a description of trades working on the project; the number of personnel working; weather conditions encountered; and any delays encountered. These records shall cover both conforming and deficient features and shall include a statement that equipment and materials incorporated in the work and workmanship comply with the contract. The original and one copy of these records in report form shall be furnished to the Government daily within forty-eight (48) hours after the date covered by the report, except that reports need not be submitted for days on which no work is performed. As a minimum, one report shall be prepared and submitted for every 7 days of no work and on the last day of a no work period. All calendar days shall be accounted for throughout the life of the contract. The first report following a day of no work shall be for that day only. Reports shall be signed and dated by the CQC System Manager. The report from the CQC System Manager shall include copies of test reports and copies of reports prepared by all subordinate quality control personnel.

3.10 SAMPLE FORMS

In accordance with Specification 01312 QUALITY CONTROL SYSTEM, the contractor shall use the forms produced by and printed from QCS. Samples of any forms required to meet the requirements of this section which are not produced by that system shall be included in the contractors Quality Control Plan.

3.11 NOTIFICATION OF NONCOMPLIANCE

The Contracting Officer will notify the Contractor of any detected noncompliance with the foregoing requirements. The Contractor shall take immediate corrective action after receipt of such notice. Such notice, when delivered to the Contractor at the work site, shall be deemed sufficient for the purpose of notification. If the Contractor fails or refuses to comply promptly, the Contracting Officer may issue an order stopping all or part of the work until satisfactory corrective action has been taken. No part of the time lost due to such stop orders shall be made the subject of claim for extension of time or for excess costs or damages by the Contractor.

-- End of Section --

SECTION 01525

SECTION 01525

SAFETY AND OCCUPATIONAL HEALTH REQUIREMENTS

PART 1 GENERAL

For contractor safety on projects associated with this program, compliance with EM 385-1-1 safety requirements will be the long-term goal reached by growing a safety culture. This compliance will, by necessity, be achieved through a phased-in process. In the Commander’s letter at the preface of the EM 385-1-1, he acknowledges that in OCONUS locations, strict compliance with the manual may not be possible – and through the hazard analysis process, safety measures can be developed to attain the same degree of safety.

This specification consists of two parts:

1) Sections 1.1 through 3.12.1, which are the standard safety specifications for work in Europe District and;

2) Appendix A, Phasing approach for safety in emerging countries where there is little or no national safety standards.

1.1 REFERENCES

The publications listed below form a part of this specification to the extent referenced. The publications are referred to within the text by the basic designation only.

AMERICAN NATIONAL STANDARDS INSTITUTE (ANSI)

ANSI A10.32	Personal Fall Protection - Safety Requirements for Construction and Demolition Operations
ANSI Z359.1(1992; R 1999)	Safety Requirements for Personal Fall Arrest Systems, Subsystems and Components
ANSI/ASSE A10.34(2001)	Protection of the Public on or Adjacent to Construction Sites
ASME B30.3(1996)	Construction Tower Cranes

ASME INTERNATIONAL (ASME)

ASME B30.22(2000)	Articulating Boom Cranes
ASME B30.5(2004)	Mobile and Locomotive Cranes

NATIONAL FIRE PROTECTION ASSOCIATION (NFPA)

NFPA 10(2002)	Portable Fire Extinguishers
NFPA 241(2000)	Safeguarding Construction, Alteration, and Demolition Operations
NFPA 51B(2003)	Fire Prevention During Welding, Cutting, and Other Hot Work
NFPA 70(2005)	National Electrical Code
NFPA 70E(2004)	Electrical Safety in the Workplace

U.S. ARMY CORPS OF ENGINEERS (USACE)

EM 385-1-1(2003) Safety	Safety and Health Requirements

U.S. NATIONAL ARCHIVES AND RECORDS ADMINISTRATION (NARA)

29 CFR 1910	Occupational Safety and Health Standards (OSHA)
29 CFR 1910.146	Permit-required Confined Spaces
29 CFR 1915	Confined and Enclosed Spaces and Other Dangerous Atmospheres in Shipyard Employment
29 CFR 1919	Gear Certification
29 CFR 1926	Safety and Health Regulations for Construction

29 CFR 1926.500 Fall Protection

1.2 SUBMITTALS

Government approval is required for submittals with a "G" designation; submittals not having a "G" designation are for information only. When used, a designation following the "G" designation identifies the office that will review the submittal for the Government. The following shall be submitted in accordance with SR SUBMITTAL PROCEDURES:

SD-01 Preconstruction Submittals

Accident Prevention Plan (APP); G, ACC

Activity Hazard Analysis (AHA); G, ACC

Crane Critical Lift Plan; G, ACC

Proof of qualification for Crane Operators; G, ACC

SD-06 Test Reports

Reports: Submit reports as their incidence occurs, in accordance with the requirements of the paragraph entitled, "Reports."

Accident Reports

Monthly Exposure Reports

Crane Reports

Regulatory Citations and Violations

SD-07 Certificates

Confined Space Entry Permit

Contractor Safety Self-Evaluation Checklist; G, ACC

Submit one copy of each permit/certificate attached to each Daily Quality Control Report.

1.3 DEFINITIONS

a. Competent Person for Fall Protection. A person who is capable of identifying hazardous or dangerous conditions in the personal fall arrest system or any component thereof, as well as their application and use with related equipment, and has the authority to take prompt corrective measures to eliminate the hazards of falling.

b. High Visibility Accident. Any mishap which may generate publicity and/or high visibility.

c. Medical Treatment. Treatment administered by a physician or by registered professional personnel under the standing orders of a physician. Medical treatment does not include first aid treatment even through provided by a physician or registered personnel.

d. Qualified Person for Fall Protection. A person with a recognized degree or professional certificate, extensive knowledge, training and experience in the field of fall protection who is capable of performing design, analysis, and evaluation of fall protection systems and equipment.

e. Recordable Injuries or Illnesses. Any work-related injury or illness that results in:

(1) Death, regardless of the time between the injury and death, or the length of the illness;

(2) Days away from work (any time lost after day of injury/illness onset);

(3) Restricted work;

(4) Transfer to another job;

(5) Medical treatment beyond first aid;

(6) Loss of consciousness; or

(7) A significant injury or illness diagnosed by a physician or other licensed health care professional, even if it did not result in (1) through (6) above.

f. "USACE" property and equipment specified in USACE EM 385-1-1 should be interpreted as Government property and equipment.

1.4 DRUG PREVENTION PROGRAM

Conduct a proactive drug and alcohol use prevention program for all workers, prime and subcontractor, on the site. Ensure that no employee uses illegal drugs or consumes alcohol during work hours. Ensure there are no employees under the influence of drugs or alcohol during work hours. After accidents, collect blood, urine, or saliva specimens and test the injured and involved employees for the influence of drugs and alcohol. A copy of the test shall be made available to the Contracting Officer upon request.

1.5 REGULATORY REQUIREMENTS

In addition to the detailed requirements included in the provisions of this contract, work performed shall comply with USACE EM 385-1-1, and in particular, the requirements of the European Union Council Directive 92/57/EEC of 24 June 1992 on the implementation of minimum safety and health requirements at temporary or mobile construction sites. Submit matters of interpretation of standards to the appropriate administrative agency for resolution before starting work. Where the requirements of this specification, applicable laws, criteria, ordinances, regulations, and referenced documents vary, the most stringent requirements shall apply.

1.6 SITE QUALIFICATIONS, DUTIES AND MEETINGS

1.6.1 Personnel Qualifications

1.6.1.1 Site Safety and Health Officer (SSHO)

Site Safety and Health Officer (SSHO) shall be provided at the work site at all times to perform safety and occupational health management, surveillance, inspections, and safety enforcement for the Contractor. The Contractor Quality Control (QC) person can only be the SSHO on this project if approved by the Contracting Officer. Any project exceeding 1 Million US dollars in value shall have a full time SSHO. The SSHO shall meet the following requirements: A minimum of 5 years safety work on similar projects; 30-hour OSHA construction safety class or European Union equivalent within the

last 5 years; an average of at least 24 hours of formal safety training each year for the past 5 years. Competent person training as needed.

1.6.1.2 Competent Person for Confined Space Entry

Provide a competent person meeting the requirements of EM 385-1-1 who is assigned in writing by the Government Designated Authority (GDA) to assess confined spaces and who possesses demonstrated knowledge, skill and ability to:

a. Identify the structure, location, and designation of confined and permit-required confined spaces where work is done;

b. Calibrate and use testing equipment including but not limited to, oxygen indicators, combustible gas indicators, carbon monoxide indicators, and carbon dioxide indicators, and to interpret accurately the test results of that equipment;

c. Perform all required tests and inspections specified in Section 06.I of EM 385-1-1;

d. Assess hazardous conditions including atmospheric hazards in confined space and adjacent spaces and specify the necessary protection and precautions to be taken;

e. Determine ventilation requirements for confined space entries and operations;

f. Assess hazards associated with hot work in confined and adjacent space and determine fire watch requirements; and,

g. Maintain records required.

1.6.1.3 Crane Operators

Crane operators shall meet the requirements in USACE EM 385-1-1, Section 16 and Appendix G. In addition, crane operators shall be designated as qualified by a source that qualifies crane operators (i.e., union, a government agency, or and organization that tests and qualifies crane operators). Proof of current qualification shall be provided.

1.6.2 Personnel Duties

1.6.2.1 Site Safety and Health Officer (SSHO)/Superintendent

a. Conduct daily safety and health inspections and maintain a written log which includes area/operation inspected, date of inspection, identified hazards, recommended corrective actions, estimated and actual dates of corrections. Safety inspection logs shall be attached to the Contractors' daily quality control report.

b. Conduct mishap investigations and complete required reports. Maintain an accident/injury log such as the OSHA Form 300 or host nation equivalent, and Daily Production reports for prime and sub-contractors.

c. Maintain applicable safety reference material on the job site.

d. Attend the pre-construction conference, pre-work meetings including preparatory inspection meeting, and periodic in-progress meetings.

e. Implement and enforce accepted APPS and AHAs.

f. Maintain a safety and health deficiency tracking system that monitors outstanding deficiencies until resolution. A list of unresolved safety and health deficiencies shall be posted on the safety bulletin board.

g. Ensure sub-contractor compliance with safety and health requirements.

Failure to perform the above duties will result in dismissal of the superintendent and/or SSHO, and a project work stoppage. The project work stoppage will remain in effect pending approval of a suitable replacement.

1.6.3 Meetings

1.6.3.1 Preconstruction Conference

a. Contractor representatives who have a responsibility or significant role in accident prevention on the project shall attend the preconstruction conference. This includes the project superintendent, site safety and health officer, quality control supervisor, or any other assigned safety and health professionals who participated in the development of the APP (including the Activity Hazard Analyses (AHAs) and special plans, program and procedures associated with it).

b. The Contractor shall discuss the details of the submitted APP to include incorporated plans, programs, procedures and a listing of anticipated AHAs that will be developed and implemented during the performance of the contract. This list of proposed AHAs will be reviewed at the conference and an agreement will be reached between the Contractor and the Contracting Officer's representative as to which phases will require an analysis. In addition, a schedule for the preparation, submittal, review, and acceptance of AHAs shall be established to preclude project delays.

c. Deficiencies in the submitted APP will be brought to the attention of the Contractor at the preconstruction conference, and the Contractor shall revise the plan to correct deficiencies and re-submit it for acceptance. Work shall not begin until there is an accepted APP.

d. The functions of a Preconstruction conference may take place at the Post-Award Kickoff meeting for Design Build Contracts.

1.6.3.2 Safety Meetings

Shall be conducted and documented as required by EM 385-1-1. Minutes showing contract title, signatures of attendees and a list of topics discussed shall be attached to the Contractors' daily quality control report.

1.7 TRAINING

1.7.1 New Employee Indoctrination

New employees (prime and sub-contractor) will be informed of specific site hazards before they begin work. Documentation of this orientation shall be kept on file at the project site.

1.7.2 Periodic Training

Provide Safety and Health Training in accordance with USACE EM 385-1-1 and the accepted APP. Ensure all required training has been accomplished for all onsite employees.

1.7.3 Training on Activity Hazard Analysis (AHA)

Prior to beginning a new phase, training will be provided to all affected

1.8 ACCIDENT PREVENTION PLAN (APP)

The Contractor shall use a qualified person to prepare the written site-specific APP in both English and in the host nation language. Prepare the APP in accordance with the format and requirements of USACE EM 385-1-1 and as supplemented herein. Cover all paragraph and subparagraph elements in USACE EM 385-1-1, Appendix A, "Minimum Basic Outline for Accident Prevention Plan". Specific requirements for some of the APP elements are described below. The APP shall be job-specific and shall address any unusual or unique aspects of the project or activity for which it is written. The APP shall interface with the Contractor's overall safety and health program. Any portions of the Contractor's overall safety and health program referenced in the APP shall be included in the applicable APP element and made site-specific. The Government considers the Prime Contractor to be the "controlling authority" for all work site safety and health of the subcontractors. Contractors are responsible for informing their subcontractors of the safety provisions under the terms of the contract and the penalties for noncompliance, coordinating the work to prevent one craft from interfering with or creating hazardous working conditions for other crafts, and inspecting subcontractor operations to ensure that accident prevention responsibilities are being carried out. The APP shall be signed by the person and firm (senior person) preparing the APP, the Contractor, the on-site superintendent, the designated site safety and health officer.

Submit the APP to the Contracting Officer 15 calendar days prior to the date of the preconstruction conference for acceptance. Work cannot proceed without an accepted APP.

Once accepted by the Contracting Officer, the APP and attachments will be enforced as part of the contract. Disregarding the provisions of this contract or the accepted APP will be cause for stopping of work, at the discretion of the Contracting Officer, until the matter has been rectified.

Once work begins, changes to the accepted APP shall be made with the knowledge and concurrence of the Contracting Officer, project superintendent, SSHO and quality control manager. Should any hazard become evident, stop work in the area, secure the area, and develop a plan to remove the hazard. Notify the Contracting Officer within 24 hours of discovery. In the interim, all necessary action shall be taken to restore and maintain safe working conditions in order to safeguard onsite personnel, visitors, the public, and the environment.

Copies of the accepted plan will be maintained at the Contracting Officer's office and at the job site.

The APP shall be continuously reviewed and amended, as necessary, throughout the life of the contract. Unusual or high-hazard activities not identified in the original APP shall be incorporated in the plan as they are discovered.

1.8.1 EM 385-1-1 Contents

In addition to the requirements outlines in Appendix A of USACE EM 385-1-1, the following is required:

a. Names and qualifications (resumes including education, training, experience and certifications) of all site safety and health personnel designated to perform work on this project to include the designated site safety and health officer and other competent and qualified personnel to be. The duties of each position shall be specified.

b. Qualifications of competent and of qualified persons. As a minimum, competent persons shall be designated and qualifications submitted for each of the following major areas: excavation; scaffolding; fall protection; hazardous energy; confined space; health hazard

recognition, evaluation and control of chemical, physical and biological agents; personal protective equipment and clothing to include selection, use and maintenance.

c. Confined Space Entry Plan. Develop a confined space entry plan in accordance with USACE EM 385-1-1, Section 06.I, and any other federal, state and local regulatory requirements identified in this contract. Identify the qualified person's name and qualifications, training, and experience. Delineate the qualified person's authority to direct work stoppage in the event of hazardous conditions. Include procedure for rescue by contractor personnel and the coordination with emergency responders. (If there is no confined space work, include a statement that no confined space work exists and none will be created.)

d. Crane Critical Lift Plan. Prepare and sign weight handling critical lift plans for lifts over 75 percent of the capacity of the crane or hoist (or lifts over 50 percent of the capacity of a barge mounted mobile crane's hoists) at any radius of lift; lifts involving more than one crane or hoist; lifts of personnel; and lifts involving non-routine rigging or operation, sensitive equipment, or unusual safety risks. The plan shall be submitted 15 calendar days prior to on-site work and include the requirements of USACE EM 385-1-1, paragraph 16.C.18. and the following:

(1) For lifts of personnel, the plan shall demonstrate compliance with the requirements of EM 385-1-1, Section 22.F.

(2) For barge mounted mobile cranes, barge stability calculations identifying barge list and trim based on anticipated loading; and load charts based on calculated list and trim. The amount of list and trim shall be within the crane manufacturer's requirements.

e. Fall Protection and Prevention (FP&P) Plan. The plan shall be site specific and address all fall hazards in the work place and during different phases of construction. It shall address how to protect and prevent workers from falling to lower levels when they are exposed to fall hazards above 1.8 m (6 feet). A qualified person for fall protection shall prepare and sign the plan. The plan shall include fall protection and prevention systems, equipment and methods employed for every phase of work, responsibilities, assisted rescue, self-rescue and evacuation procedures, training requirements, and monitoring methods. Fall Protection and Prevention Plan shall be revised every six months for lengthy projects, reflecting any changes during the course of construction due to changes in personnel, equipment, systems or work habits. The accepted Fall Protection and Prevention Plan shall be kept and maintained at the job site for the duration of the project. The Fall Protection and Prevention Plan shall be included in the Accident Prevention Plan (APP).

1.9 ACTIVITY HAZARD ANALYSIS (AHA)

The Activity Hazard Analysis (AHA) format shall be in accordance with USACE EM 385-1-1, and shall be written in both English and the host nation language. Submit the AHA for review at least 15 calendar days prior to the start of each phase. Format subsequent AHAs as amendments to the APP. The analysis should be used during daily inspections to ensure the implementation and effectiveness of the activity's safety and health controls.

The AHA list will be reviewed periodically (at least monthly) at the Contractor supervisory safety meeting and updated as necessary when procedures, scheduling, or hazards change.

The activity hazard analyses shall be developed using the project schedule as the basis for the activities performed. Any activities listed on the project schedule will require an AHA. The AHAs will be developed by the contractor, supplier or subcontractor and provided to the prime contractor for submittal to the Contracting Officer.

1.10 DISPLAY OF SAFETY INFORMATION

Within 1 calendar day after commencement of work, erect a safety bulletin board at the job site. The safety bulletin board shall include information and be maintained as required by EM 385-1-1, section 01.A.06.

1.11 SITE SAFETY REFERENCE MATERIALS

Maintain safety-related references applicable to the project. Maintain applicable equipment manufacturer's manuals.

1.12 EMERGENCY MEDICAL TREATMENT

Contractors will arrange for their own emergency medical treatment. The Government has no responsibility to provide emergency medical treatment. Military medical clinics may provide emergency treatment for serious injuries; the contractor is responsible for coordination with the local military medical clinic prior to mobilization.

1.13 REPORTS

1.13.1 Accident Reports

For recordable injuries and illnesses, and property damage accidents resulting in at least $2,000 in damages, the Prime Contractor shall conduct an accident investigation to establish the root cause(s) of the accident complete the USACE Accident Report Form 3394 and provide the report to the Contracting Officer within 5 calendar day(s) of the accident. The Contracting Officer will provide copies of any required or special forms.

1.13.2 Accident Notification

Notify the Contracting Officer as soon as practical, but not later than four hours, after any accident meeting the definition of Recordable Injuries or Illnesses or High Visibility Accidents, property damage equal to or greater than $2,000. Information shall include contractor name; contract title; type of contract; name of activity, installation or location where accident occurred; date and time of accident; names of personnel injured; extent of property damage, if any; extent of injury, if known, and brief description of accident (to include type of construction equipment used, PPE used, etc.). Preserve the conditions and evidence on the accident site until the Government investigation team arrives on-site and Government investigation is conducted.

1.13.3 Monthly Exposure Reports

Monthly exposure reporting to the Contracting Officer is required to be attached to the monthly billing request. This report is a compilation of employee-hours worked each month for all site workers, both prime and subcontractor. The Contracting Officer will provide copies of any special forms.

1.13.4 Crane Reports

Submit crane inspection reports required in accordance with USACE EM 385-1-1, Appendix H and as specified herein with Daily Reports of Inspections.

1.14 HOT WORK

Prior to performing "Hot Work" (welding, cutting, etc.) or operating other flame-producing/spark producing devices, a written permit shall be requested from the Installation. CONTRACTORS ARE REQUIRED TO MEET ALL CRITERIA BEFORE A PERMIT IS ISSUED. The Contractor will provide

at least two (2) six kilogram ABC rated extinguishers for normal "Hot Work". All extinguishers shall be current inspection tagged, approved safety pin and tamper resistant seal. It is also mandatory to have a designated FIRE WATCH for any "Hot Work" done at this activity. The Fire Watch shall be trained in fire fighting techniques and remain on-site for a minimum of 120 minutes after completion of the task or as specified on the hot work permit.

When starting work in the facility, Contractors shall require their personnel to familiarize themselves with the location of the nearest fire alarm boxes and place in memory the emergency phone numbers. ANY FIRE, NO MATTER HOW SMALL, SHALL BE REPORTED TO THE RESPONSIBLE FIRE DIVISION/DEPARTMENT IMMEDIATELY.

PART 2 PRODUCTS

Not used.

PART 3 EXECUTION

3.1 CONSTRUCTION AND/OR OTHER WORK

Before initiation of work at the job site, an accident prevention plan, written by the Contractor for the specific work and hazards of the contract and implementing in detail the pertinent requirements of EM 385-1-1, will be reviewed and found acceptable by designated Government personnel. Specific requirements for development of the accident prevention plan are found in sections 01.A and Appendix A of EM 385-1-1.

Before beginning each activity involving a type of work presenting hazards not experienced in previous project operations or where a new work crew or subcontractor is to perform the work, activity hazard analysis (AHA) shall be prepared by the Contractor performing the work activity. See paragraph 01.A.09 of EM 385-1-1.

The Contractor shall require subcontractors to submit their plan of operations showing methods they propose to use in accomplishing major phases of work.

The Contractor shall be prepared to discuss the plans in conferences convened by the Contracting Officer prior to starting work on each major phase of operation. Plans shall include all pertinent information such as layout of haul roads, access roads, storage areas, electrical distribution lines, methods of providing minimum exposure to overhead loads, and methods of access to work areas. The plan for accomplishing the initial work phase shall be submitted within 15 calendar days after award of the contract. Plans for subsequent major phases of work shall be submitted not later than 15 calendar days prior to initiation of work on each major phase.

All areas where construction, demolition, alteration, building, or similarly related activities take place, all workers shall have the following minimum personal protective clothing and equipment:

1. Short sleeve shirt.
2. Long trousers.
3. Steel-toed safety boots.
4. Hard hat.

3.1.1 Falling Object Protection

All areas must be barricaded to safeguard employees. When working overhead, barricade the area below to prevent entry by unauthorized employees. Construction warning tape and signs shall be posted so they are clearly visible from all possible access points. When employees are working overhead all tools and equipment shall be secured so that they will not fall. When using guardrail as

falling object protection, all openings shall be small enough to prevent passage of potential falling objects.

3.1.2 Hazardous Material Use

Each hazardous material must receive approval prior to being brought onto the job site or prior to any other use in connection with this contract. Allow a minimum of 10 working days for processing of the request for use of a hazardous material. Any work or storage involving hazardous chemicals or materials must be done in a manner that will not expose Government or Contractor employees to any unsafe or unhealthful conditions. Adequate protective measures must be taken to prevent Government or Contractor employees from being exposed to any hazardous condition that could result from the work or storage. The Prime Contractor shall keep a complete inventory of hazardous materials brought onto the work-site. Approval by the Contracting Officer of protective measures and storage area is required prior to the start of the work.

3.1.3 Hazardous Material Exclusions

Notwithstanding any other hazardous material used in this contract, radioactive materials or instruments capable of producing ionizing/non-ionizing radiation (with the exception of radioactive material and devices used in accordance with USACE EM 385-1-1 such as nuclear density meters for compaction testing and laboratory equipment with radioactive sources) as well as materials which contain asbestos, mercury or polychlorinated biphenyls, di-isocynates, lead-based paint are prohibited. The Contracting Officer, upon written request by the Contractor, may consider exceptions to the use of any of the above excluded materials.

3.1.4 Unforeseen Hazardous Material

The design should have identified materials such as PCB, lead paint, and friable and non-friable asbestos. If material, not indicated, that may be hazardous to human health upon disturbance during construction operations is encountered, stop that portion of work and notify the Contracting Officer immediately. Within 14 calendar days the Government will determine if the material is hazardous. If material is not hazardous or poses no danger, the Government will direct the Contractor to proceed without change. If material is hazardous and handling of the material is necessary to accomplish the work, the Government will issue a modification pursuant to "FAR 52.243-4, Changes" and "FAR 52.236-2, Differing Site Conditions."

3.2 FALL HAZARD PROTECTION AND PREVENTION PROGRAM

The Contractor shall establish a fall protection and prevention program, for the protection of all employees exposed to fall hazards. The program shall include company policy, identify responsibilities, education and training requirements, fall hazard identification, prevention and control measures, inspection, storage, care and maintenance of fall protection equipment and rescue and evacuation procedures.

3.2.1 Training

The Contractor shall institute a fall protection training program. As part of the Fall Hazard Protection and Prevention Program, the Contractor shall provide training for each employee who might be exposed to fall hazards. A competent person for fall protection shall provide the training. Training requirements shall be in accordance with USACE EM 385-1-1, section 21.A.16.

3.2.2 Fall Protection Equipment and Systems

The Contractor shall enforce use of the fall protection equipment and systems designated for each specific work activity in the Fall Protection and Prevention Plan and/or AHA at all times when an

employee is exposed to a fall hazard. Employees shall be protected from fall hazards as specified in EM 385-1-1, section 21. In addition to the required fall protection systems, safety skiff, personal floatation devices, life rings etc., are required when working above or next to water in accordance with USACE EM 385-1-1, paragraphs 05.H. and 05.I. Personal fall arrest systems are required when working from an articulating or extendible boom, swing stages, or suspended platform. In addition, personal fall arrest systems are required when operating other equipment such as scissor lifts if the work platform is capable of being positioned outside the wheelbase. The need for tying-off in such equipment is to prevent ejection of the employee from the equipment during raising, lowering, or travel. Fall protection must comply with USACE EM 385-1-1 and host nation requirements, whichever is more stringent.

3.2.2.1 Personal Fall Arrest Equipment

Personal fall arrest equipment, systems, subsystems, and components shall meet ANSI Z359.1 or European Union equivalent. Only a full-body harness with a shock-absorbing lanyard or self-retracting lanyard is an acceptable personal fall arrest body support device. Body belts may only be used as a positioning device system (for uses such as steel reinforcing assembly and in addition to an approved fall arrest system). Harnesses shall have a fall arrest attachment affixed to the body support (usually a Dorsal D-ring) and specifically designated for attachment to the rest of the system. Only locking snap hooks and carabiners shall be used. Webbing, straps, and ropes shall be made of synthetic fiber. The maximum free fall distance when using fall arrest equipment shall not exceed 1.8 m (6 feet). The total fall distance and any swinging of the worker (pendulum-like motion) that can occur during a fall shall always be taken into consideration when attaching a person to a fall arrest system.

3.2.3 Fall Protection for Roofing Work

Fall protection controls shall be implemented based on the type of roof being constructed and work being performed. The roof area to be accessed shall be evaluated for its structural integrity including weight-bearing capabilities for the projected loading.

a. Low Sloped Roofs:

(1) For work within 1.8 m (6 feet) of an edge, on low-slope roofs, personnel shall be protected from falling by use of personal fall arrest systems, guardrails, or safety nets. A safety monitoring system is not adequate fall protection and is not authorized.

(2) For work greater than 1.8 m (6 feet) from an edge, warning lines shall be erected and installed in accordance with USACE EM 385-1-1.

b. Steep-Sloped Roofs: Work on steep-sloped roofs requires a personal fall arrest system, guardrails with toe-boards, or safety nets. This requirement also includes residential or housing type construction.

3.2.4 Existing Anchorage

Existing anchorages, to be used for attachment of personal fall arrest equipment, shall be certified (or re-certified) by a qualified person for fall protection in accordance with ANSI Z359.1 or European Union equivalent. Exiting horizontal lifeline anchorages shall be certified (or re-certified) by a registered professional engineer with experience in designing horizontal lifeline systems.

3.2.5 Horizontal Lifelines

Horizontal lifelines shall be designed, installed, certified and used under the supervision of a qualified person for fall protection as part of a complete fall arrest system which maintains a safety factor of 2.

3.2.6 Guardrails and Safety Nets

Guardrails and safety nets shall be designed, installed and used in accordance with EM 385-1-1 or Host Nation requirements, whichever is more stringent.

3.2.7 Rescue and Evacuation Procedures

When personal fall arrest systems are used, the contractor must ensure that the mishap victim can self-rescue or can be rescued promptly should a fall occur. A Rescue and Evacuation Plan shall be prepared by the contractor and include a detailed discussion of the following: methods of rescue; methods of self-rescue; equipment used; training requirement; specialized training for the rescuers; procedures for requesting rescue and medical assistance; and transportation routes to a medical facility. The Rescue and Evacuation Plan shall be included in the Activity Hazard Analysis (AHA) for the phase of work, in the Fall Protection and Prevention (FP&P) Plan, and the Accident Prevention Plan (APP).

3.3 SCAFFOLDING

Employees shall be provided with a safe means of access to the work area on the scaffold. Climbing of any scaffold braces or supports not specifically designed for access is prohibited. Access to scaffold platforms greater than 6 m in height shall be accessed by use of a scaffold stair system. Vertical ladders commonly provided by scaffold system manufacturers shall not be used for accessing scaffold platforms greater than 6 m in height. The use of an adequate gate is required. Contractor shall ensure that employees are qualified to perform scaffold erection and dismantling. Do not use scaffold without the capability of supporting at least four times the maximum intended load or without appropriate fall protection as delineated in the accepted fall protection and prevention plan. Stationary scaffolds must be attached to structural building components to safeguard against tipping forward or backward. Special care shall be given to ensure scaffold systems are not overloaded. Side brackets used to extend scaffold platforms on self-supported scaffold systems for the storage of material is prohibited. The first tie-in shall be at the height equal to 4 times the width of the smallest dimension of the scaffold base. Work platforms shall be placed on mud sills. Scaffold or work platform erectors shall have fall protection during the erection and dismantling of scaffolding or work platforms that are more than six feet. Delineate fall protection requirements when working above six feet or above dangerous operations in the Fall Protection and Prevention (FP&P) Plan and Activity Hazard Analysis (AHA) for the phase of work.

3.4 EQUIPMENT

3.4.1 Material Handling Equipment

a. Material handling equipment such as forklifts shall not be modified with work platform attachments for supporting employees unless specifically delineated in the manufacturer's printed operating instructions.

b. The use of hooks on equipment for lifting of material must be in accordance with manufacturer's printed instructions.

c. Operators of forklifts or power industrial trucks shall be trained/licensed in accordance with Host Nation requirements.

3.4.2 Weight Handling Equipment

a. Cranes and derricks shall be equipped as specified in EM-385-1-1 section 16.

b. The Contractor shall notify the Contracting Officer 15 days in advance of any cranes entering the activity so that necessary quality assurance spot checks can be coordinated. Contractor's operator shall remain with the crane during the spot check.

c. The Contractor shall comply with the crane manufacturer's specifications and limitations for erection and operation of cranes and hoists used in support of the work. Erection shall be performed under the supervision of a designated person. All testing shall be performed in accordance with the manufacturer's recommended procedures.

d. Under no circumstance shall a Contractor make a lift at or above 90% of the cranes rated capacity in any configuration.

e. When operating in the vicinity of overhead transmission lines, operators and riggers shall be alert to this special hazard and shall follow the requirements of USACE EM 385-1-1 section 11.

f. Crane suspended personnel work platforms (baskets) shall not be used unless the Contractor proves to the satisfaction of the Contracting Officer that using any other access to the work location would provide a greater hazard to the workers or is impossible. Personnel shall not be lifted with a line hoist or friction crane.

g. Portable fire extinguishers shall be inspected, maintained, and recharged.

h. All employees shall be kept clear of loads about to be lifted and of suspended loads.

i. The Contractor shall use cribbing when performing lifts on outriggers.

j. The crane hook/block must be positioned directly over the load. Side loading of the crane is prohibited.

k. A physical barricade must be positioned to prevent personnel from entering the counterweight swing (tail swing) area of the crane.

l. Certification records which include the date of inspection, signature of the person performing the inspection, and the serial number or other identifier of the crane that was inspected shall always be available for review by Contracting Officer personnel.

m. Written reports listing the load test procedures used along with any repairs or alterations performed on the crane shall be available for review by Contracting Officer personnel.

n. Certify that all crane operators have been trained in proper use of all safety devices (e.g. anti-two block devices).

o. Take steps to ensure that wind speed does not contribute to loss of control of the load during lifting operations. Prior to conducting lifting operations the contractor shall set a maximum wind speed at which a crane can be safely operated based on the equipment being used, the load being lifted, experience of operators and riggers, and hazards on the work site. This maximum wind speed determination shall be included as part of the activity hazard analysis plan for that operation.

3.5 EXCAVATIONS

The competent person for excavations performed as a result of contract work shall be on-site when excavation work is being performed, and shall inspect, and document the excavations daily prior to entry by workers. The competent person must evaluate all hazards, including atmospheric, that may be associated with the work, and shall have the resources necessary to correct hazards promptly.

3.5.1 Utility Locations

Prior to any excavation, all underground utilities in the work area must be positively identified by the contractor utilizing a) a private utility locating service in addition to any station locating service, and/or b) a metal and/or cable-detecting device along the route of the excavation. All underground utilities discovered will be flagged a distance of one-half (1/2) meter on each side of the location, and any markings made during the utility investigation must be maintained throughout the contract.

Damage occurring to existing utilities, when the above procedures are not followed, will be repaired at the Contractor's expense.

3.5.2 Utility Location Verification

The Contractor must physically verify underground utility locations by hand digging using wood or fiberglass handled tools when any adjacent construction work is expected to come within three feet of the underground system. Digging within 0.61 m (2 feet) of a known utility must not be performed by means of mechanical equipment; hand digging shall be used. If construction is parallel to an existing utility the utility shall be exposed by hand digging every 30.5 m (100 feet) if parallel within 1.5 m (5 feet) of the excavation.

3.5.3 Shoring Systems

Trench and shoring systems must be identified in the accepted safety plan and AHA. Manufacture tabulated data and specifications or registered engineer tabulated data for shoring or benching systems shall be readily available on-site for review. Job-made shoring or shielding shall have the registered professional engineer stamp, specifications, and tabulated data. Extreme care must be used when excavating near direct burial electric underground cables.

3.5.4 Trenching Machinery

Trenching machines with digging chain drives shall be operated only when the spotters/laborers are in plain view of the operator. Operator and spotters/laborers shall be provided training on the hazards of the digging chain drives with emphasis on the distance that needs to be maintained when the digging chain is operating. Documentation of the training shall be kept on file at the project site.

3.6 UTILITIES WITHIN CONCRETE SLABS

Utilities located within concrete slabs or pier structures, bridges, and the like, are extremely difficult to identify due to the reinforcing steel used in the construction of these structures. Whenever contract work involves concrete chipping, saw cutting, or core drilling, the existing utility location must be coordinated with station utility departments in addition to a private locating service. Outages to isolate utility systems shall be used in circumstances where utilities are unable to be positively identified. The use of historical drawings does not alleviate the contractor from meeting this requirement.

3.7 ELECTRICAL

3.7.1 Conduct of Electrical Work

Underground electrical spaces must be certified safe for entry before entering to conduct work. Cables that will be cut must be positively identified and de-energized prior to performing each cut. Positive cable identification must be made prior to submitting any outage request for electrical systems. Arrangements are to be coordinated with the Contracting Officer and Station Utilities for identification. The Contracting Officer will not accept an outage request until the Contractor satisfactorily documents that the circuits have been clearly identified. Perform all high voltage cable

cutting remotely using hydraulic cutting tool. When racking in or live switching of circuit breakers, no additional person other than the switch operator will be allowed in the space during the actual operation. Plan so that work near energized parts is minimized to the fullest extent possible. Use of electrical outages clear of any energized electrical sources is the preferred method. When working in energized substations, only qualified electrical workers shall be permitted to enter. When work requires Contractor to work near energized circuits as defined by the NFPA 70, high voltage personnel must use personal protective equipment that includes, as a minimum, electrical hard hat, safety shoes, insulating gloves with leather protective sleeves, fire retarding shirts, coveralls, face shields, and safety glasses. In addition, provide electrical arc flash protection for personnel as required by NFPA 70E. Insulating blankets, hearing protection, and switching suits may also be required, depending on the specific job and as delineated in the Contractor's AHA.

3.7.2 Portable Extension Cords

Portable extension cords shall be sized in accordance with manufacturer ratings for the tool to be powered and protected from damage. All damaged extension cords shall be immediately removed from service. Portable extension cords shall meet the requirements of NFPA 70 or European Union equivalent.

3.8 WORK IN CONFINED SPACES

The Contractor shall comply with the requirements in Section 06.I of USACE EM 385-1-1. Any potential for a hazard in the confined space requires a permit system to be used.

a. Entry Procedures. Prohibit entry into a confined space by personnel for any purpose, including hot work, until the qualified person has conducted appropriate tests to ensure the confined or enclosed space is safe for the work intended and that all potential hazards are controlled or eliminated and documented. (See Section 06.I.06 of USACE EM 385-1-1 for entry procedures). All hazards pertaining to the space shall be reviewed with each employee during review of the AHA.

b. Forced air ventilation is required for all confined space entry operations and the minimum air exchange requirements must be maintained to ensure exposure to any hazardous atmosphere is kept below its' action level.

c. Ensure the use of rescue and retrieval devices in confined spaces greater than 1.5 m (5 feet) in depth. Conform to Sections 06.I.08, 06.I.09 and 06.I.10 of USACE EM 385-1-1.

d. Sewer wet wells require continuous atmosphere monitoring with audible alarm for toxic gas detection.

e. Include training information for employees who will be involved as entrants and attendants for the work. Conform to Section 06.I.07 of USACE EM 385-1-1.

f. Daily Entry Permit. Post the permit in a conspicuous place close to the confined space entrance.

3.9 CRYSTALLINE SILICA

Grinding, abrasive blasting, and foundry operations of construction materials containing crystalline silica, shall comply with USACE EM 385-1-1, Appendix C. The Contractor shall develop and implement effective exposure control and elimination procedures to include dust control systems, engineering controls, and establishment of work area boundaries, as well as medical surveillance, training, air monitoring, and personal protective equipment.

3.10 DEMOLITION

3.101.1 Demolition Plan

The Contractor shall submit a written demolition plan for all demolition work to be carried on the site. In addition, the demolition plan shall be signed by a Professional Registered Engineer and meet the requirements of the Corps of Engineers Safety and Health Manual, EM 385-1-1, section 23. The demolition plan shall be submitted to the COR at least 1 week before the beginning of the work, including structural calculations for the demolition, if necessary. The demolition work shall not begin before the Contractor has received a written approval from the COR.

3.12.1 Protection of Personnel

During the demolition work the Contractor shall continuously evaluate the condition of the structure being demolished and take immediate action to protect all personnel working in and around the demolition site. No area, section, or component of floors, roofs, walls, columns, pilasters, or other structural element will be allowed to be left standing without sufficient bracing, shoring, or lateral support to prevent collapse or failure while workers remove debris or perform other work in the immediate area.

3.10.1 Protection of Structures

Floors, roofs, walls, columns, pilasters, and other structural components that are designed and constructed to stand without lateral support or shoring, and are determined to be in stable condition, shall remain standing without additional bracing, shoring, or lateral support until demolished, unless directed otherwise by the COR. The Contractor shall ensure that no elements determined to be unstable are left unsupported and shall be responsible for placing and securing bracing, shoring, or lateral supports as may be required as a result of any cutting, removal, or demolition work performed under this contract.

Interior concrete or masonry walls shall be demolished from the top down unless a Registered Engineer can demonstrate that an alternate method poses no additional safety hazards

3.11 HOUSEKEEPING

3.11.1 Clean-Up

The Contractor shall be responsible for cleaning up. The Contractor shall require his personnel to keep the immediate work site clean of all dirt and debris resulting from work under this contract. Accumulated dirt and debris shall be hauled off and disposed of in accordance with local law and at least once a week by the Contractor. Additionally, all debris in work areas shall be cleaned up daily or more frequently if necessary. Construction debris may be temporarily located in an approved location, however garbage accumulation must be removed each day.

Stairwells used by the Contractor during execution of work shall be cleaned daily. Cloths, mops, and brushes containing combustible materials shall be disposed of or stored outside of the buildings in tight covered metal containers. Paints and thinners shall not be poured into inlets of the interior or exterior sewage system. Paint, stains, and other residues on adjacent surfaces or fixtures caused by the Contractor shall be carefully removed and cleaned to original finish. Upon completion of the work, the Contractor shall remove all construction equipment, materials and debris resulting from the work. The entire work site and the area used by Contractor personnel shall be left clean.

ATTACHMENT

STR 01525O – SAFETY AND OCCUPATIONAL HEALTH PHASING PLAN

- End of Section -

A. PURPOSE AND RESPONSIBILITIES:

1. The purpose of this SOH Phasing Plan is to establish controls and procedures to reduce the safety and occupational health risks on associated projects to an acceptable level. This SOH Phasing Plan is not intended to address all program SOH requirements, but provides general emphasis to certain procedures and requirements addressed in: EM 385-1-1, U.S. Army Corps of Engineers Safety and Health Requirements Manual

2. For contractor safety on projects associated with this program, compliance with EM 385-1-1 safety requirements will be the long-term goal reached by growing a safety culture. This compliance will, by necessity, be achieved through a phased-in process. In the Commander's letter at the preface of the EM 385-1-1, he acknowledges that in OCONUS locations, strict compliance with the manual may not be possible – and through the hazard analysis process, safety measures can be developed to attain the same degree of safety.

a. The exact timeline and methods of compliance, based generally on the Phase plan below will be determined by in-theater Project Delivery Team (PDT) partners responsible for safety, to include USACE Field Engineering/Construction/ Safety personnel, Prime Contractors and Local Subcontractors. The Prime Contractor, in partnership with the USACE and subcontractors, will develop a Safety and occupational Health Plan (SOHP) consisting of a specific Accident Prevention Plan (APP) and Activity Hazard Analysis for each project.

b. Each project SOHP will evolve as a living document, starting by dividing into phases to provide a goal with a timeline. Focus for the project safety program areas will be based on the following time-based phases.

Phase I: "Saving Lives". Establish achievable compliance methods and basic worker safety education to eliminate or reduce to an acceptable level the life-threatening conditions associated with high hazard construction activities.

- The initial high-hazard focus areas shall include:
  - Excavations
  - Fall Hazards
  - Electrical Work
  - Mobile Construction Equipment
  - Machinery
  - Confined Spaces
- Develop a basic worker safety and health practices manual/ guide and associated mandatory training for each Focus area listed above. These will be in English and local language, based on local conditions and practices and targeted at high-hazard activities.
- On all contract sites, the basic life-support will include First Aid Kits, and emergency communication.
- Contractor Accident Prevention Plans, Activity Hazard Analyses, and other safety-related systems under development with assistance by PDT

Phase II: "Building A Safety Culture" (Approximately one year, beginning at end of Phase I) Advanced safety education of local contractors and LN work force. Full contractor compliance with
USACE safety standards related to high-hazard situations, increased application of standards on all work.

- Workforce education and training to include all applicable requirements of EM 385-1-1 and International Safety Standards
- All required Personal Protective Equipment (PPE) available and used by workers in applicable work practices, as outlined in the EM 385-1-1.

- Contractor Accident Prevention Plans, Activity Hazard Analyses, and other safety-related systems refined to meet standard USACE expectations with assistance by PDT
- Standard Contractor Safety administrative responsibilities required, i.e.: Accident reporting, man-hour tracking, training documentation, First Aid personnel certification, fire protection, etc.

Phase III, "Full Performance" (beginning at end of Phase II) Full performance in compliance with EM 385-1-1 and other applicable laws, regulations, design codes and standards.
Where standard compliance is not possible, local methods may be used in accordance with implementing letter of EM 385-1-1 or through formal waiver process.

3. The PDT shall employ the "Plan, Do, Check, Act" process for implementing this SOHP as a living document. Each PDT member is responsible for planning for safety and health management within their area of responsibility, implementing agreed-on mitigation, checking to assure that the SOHP is being implemented and acting to adjust plans and implementation with a goal of continuous improvement. This plan will be reviewed and revised as needed at the initiation of each Phase listed above.

4. The PDT members shall cooperate in developing a listing of potential hazards associated with each project.

B. GOALS AND OBJECTIVES:

1. Goals. The safety and health goals of all projects are:
   a. Be accident free
   b. Detect and address safety and health problems early in the life of each project
   c. Do not accept unnecessary risk
   d. Every team member, to include contractors shall contribute to the safety and health of their fellow team members and assure that the product is free of inherent hazards to the user.
   e. Educate the workforce and promote Safety as a new way of doing business, show how the project and the employee benefit from Safety.

2. Objectives. The safety and health objectives of this program are:
   a. Managers, supervisors, and workers shall be held accountable, based on the current Phase, for safety and health.
   b. Safety and health expectations shall be communicated with the work force in their native language through the use of banners, flyers, and periodic safety meetings
   c. The work force shall have the safety and health training needed to perform the work at hand, based on the Phase.
   d. Injury and property damage shall be avoided through early detection and management of hazards

Phase I Interim Safety and Occupational Health Work Practices for USACE Contractor Projects

Phase I Safety Program

1. Contractors shall strive to maintain full compliance with the USACE Safety Requirements Manual, EM 385-1-1. This may not be easily achieved during this Phase, due to a number of factors. The focus for safety and health efforts during this Phase is Saving Lives – the prevention of deaths, permanently disabling injuries, and major property loss. The goal during this period is to provide the equipment and methods needed to save lives and to train the workforce in working safely and using the correct personal Protective Equipment (PPE).

2. In order to assist in achieving this goal immediately, the following interim standards shall be used (as a minimum acceptable standard) when full compliance with the EM 385-1-1 is not possible. Contractors shall provide these standards in to their workforce in the local language and shall provide training as needed to ensure worker awareness.

Basic Safety and Health Standards for Construction

A. USACE and the contractors must form a team to assure safety on every job site and prevent serious accidents. All unsafe conditions must be reported and the hazard reduced before work may proceed.

B. Personal Protective Equipment (PPE) may not always be available to every worker during this Phase. Where the equipment required by the USACE Safety Manual, EM 385-1-1, cannot be provided in a timely manner, the contractor shall develop methods that will provide a similar degree of safety (as accepted by USACE) and not expose the workers to serious risk. The mandatory minimum standards for all PPE are:

- Footwear: Closed-toe durable shoes or boots shall be worn by all workers on the project site. No sandals or sports shoes will be allowed, at no time will workers be allowed on the project site with bare feet. Safety footwear (steel-toe or other protection) should be worn by workers using steel rollers, tampers, jack hammers or carrying heavy objects (metal, concrete, stone)
- Head Protection: When they are available, hard hats should be worn by all construction workers when they are at the project. Hard Hats must be worn in overhead hazard areas including material hoisting/ lifting operations, areas below scaffolds and other elevated work, in excavations, and low ceiling areas that have sharp or hazardous projections. If they are not available, then workers must be kept away from these and other overhead hazard areas.
- Respirators: Workers exposed to toxic chemicals, vapors, gases and dusts must wear proper respiratory protection. Such exposure is expected in asbestos removal/ repair work, working with paints and solvents in rooms or enclosed spaces, and fuel production facilities. The employer must train the workers in the uses of the respirator and how to properly wear it. The minimum acceptable respirator is a negative pressure filter or cartridge half-face respirator that is correctly equipped for the hazard. Contractors shall consult and follow the ACGIH guidance for length of allowable exposure to the contaminant and workers shall not exceed the recommended time for exposure. Dust Masks will be worn when the work is producing visible dust.
- Eye Protection: Workers shall wear protective glasses, goggles, or visors when exposed to eye hazards. These hazards include concrete dust, stone and concrete chips from hammering, sandblasting, and power tool cutting or milling. Workers performing welding and cutting with torches or arc-welding equipment shall wear the proper shaded lenses in face shields and/ or goggles.
- Hearing Protection: Protective ear plugs shall be worn when workers are exposed to potentially damaging noise including jack hammers, flight line operations, power saws and grinders, and combustion engines without mufflers.
- Gloves: All workers shall have protective gloves appropriate to the task.
- Clothing: Workers shall wear clothing that protects their skin from damage – shirts and long pants at a minimum. Workers exposed to welding operations, chemicals, abrasive blasting, wet concrete, asbestos, and other hazardous contaminants will wear appropriate clothing for the hazard. Workers using power tools or operating equipment shall not wear very loose or flowing clothing that may get caught in the equipment.

C. Work Methods for Highly Hazardous Work: The following types of work and hazards are recognized as the leading cause of serious injuries and deaths in construction work. Each type of work has specific PPE and safety equipment that is required to do the work and also specific

procedures that must be followed every time the work is done. These interim measures are the minimum acceptable precautions. For each project, an Activity Hazard Analysis (AHA) shall be completed and, when possible, compliance with more restrictive methods of the EM 385-1-1 shall be achieved.

Workers shall be trained on the following safety precautions, the nature of the hazards involved, and any additional work methods used before performing each type of work

- Excavations
  - The Site Safety and Health Officer will be contacted for inspection of the work prior to digging. The SSHO will assist in any safety equipment or techniques that are required to avoid injury. They will also provide a safety check on the location to assure the there are no underground hazards at the site.
  - All excavations or unsafe areas will be marked with barricades or warning tape. These warnings must be maintained and visible until the area is restored to a safe condition.
  - When workers will enter trenches, the walls shall be sloped according to the type of soil or shoring, trench boxes, or other structures will be used to protect workers from collapsing walls
  - Soil removed from trenches will not be placed at the edge of the trench – it must be placed back at least 1 meter from the edge.
  - Vehicles and construction equipment must not be parked closer than 2 meters from the edge of an excavation.
  - Excavation walls shall be inspected regularly during each day to check for cracks, bulges, large stones, sandy areas, and failure of the wall. If these conditions are found, nobody may enter the excavation and the damaged area must be dug out or braced.

- Fall Hazards
  - When working above 2 meters from the ground or another level, all workers shall be protected from falling. The SSHO will inspect prior to beginning work to be sure the work methods are safe. Inspection will include work on ladders, scaffolds, and other elevated work areas.
  - Protection systems shall be sturdy railings, walls, or other structures
  - If there are no structures to protect workers, body belts or harnesses shall be used along with lanyards.
  - Body belts should be mainly be used only to prevent a worker from falling over an edge or off a structure.
  - Body belts and harnesses can both be used as fall protection (stopping a falling worker). The lanyard shall be rope strong enough to withstand the shock of stopping the worker's weight, and they shall be as short as possible, to limit the shock force. Lanyards shall never allow a worker to fall more than 2 meters. It is recommended that lanyards without shock absorber devices be no longer than 1 meter.

- Electrical Work
  - All circuits, wires, and electrical devices shall be tested with a volt meter and found to be de-energized before workers touch the energized parts
  - Controls, switches, and other means for energizing the circuit or equipment shall be tagged "do not operate"
  - Workers shall not work closer to energized systems than the distances listed in the USACE manual.
  - Temporary electrical systems shall be grounded and tested for good ground resistance before use.
  - Power tools shall be protected from water and damage, and their cords must be insulated. Cords must be factory installed or equivalent replacements, including safety grip plug and cord boot.

- Extension cords will be in safe, good working order.

- Mobile Construction Equipment
  - If equipment, particularly cranes, are damaged the repairs shall be done by a competent repair person and verified by the SSHO prior to being brought back into service.
  - Nobody may ride outside the cab of construction equipment. Specifically, no riders may ever be in loader buckets, bulldozer blades, on forklift forks, or suspended by a crane.
  - When workers are nearby, construction equipment must have reverse signal alarms or shall use a spotter standing away from the equipment. The spotter must be visible by the driver and positioned to see the area behind the equipment.
  - Construction equipment must work a safe distance from electrical systems, based on the voltage.
  - Cranes must be used according to the manufacturer. If no manufacturer data is available, a load chart shall be developed by a qualified engineer.
  - Workers should stay out of the radius of the crane boom during a lift.
  - Lifting ropes shall be inspected daily for breaks and failure of hardware and fittings.
  - Nobody shall ever ride the hook or load of a crane.

- Machinery
  - Rotating shafts, wheels, blades, and other hazardous parts shall have guards to prevent workers from being injured.
  - Fuel-powered machinery must not be operated indoors or near enclosed areas without using powered ventilation to prevent toxic CO build-up.
  - Metal housings of electrically powered equipment must be grounded

- Confined Spaces
  - The SSHO will pre-approve any work in a confined space, such as in a tank, sewer, manhole or any other enclosed area. The SSHO will inspect the work and assist with any safety equipment or techniques that are required.
  - All permit-required confined spaces (PRCS) on a project shall have signs prohibiting entry.
  - Entrants, supervisors, and attendants for PRCS shall be properly trained.
  - When available, oxygen/flammable/toxic gas meters shall be used for all PRCS. This equipment must be used to evaluate the air in all spaces known or suspected to have contained flammable or toxic chemicals or contain sewage, rotting vegetation or other organic matter.
  - For spaces not meeting the above criteria, mechanical ventilation fans shall be used to clear the air in the space when meters are not available. Based on the air flow of the fan, it shall exhaust the total volume of the space a minimum of seven times prior to entry.
  - All entrants shall wear a harness, body belt, or other device attached to a rope sufficient to retrieve the worker in an emergency.
  - Permits should be used during PRCS entry. If not possible, then some visible means, such as flags or tags outside the entrance, shall be used so supervisors can see when workers are in the space.

- Gas Cylinders
  - Pressurized gas cylinders, such as Oxygen and Acetylene tanks will be stored in a holding stand/ cart to prevent them from falling over. Cylinders will not be placed free on the ground or standing free. If the bottle is not in use the valve will be removed.

D. Child Labor. Minors under the age of 18 may not perform any of the above hazardous work. Additionally, these minors can not perform any hazardous work such as operating dangerous power tools (circular saws, jack hammers, lathes, etc), driving vehicles, be exterior assistants for

vehicle operators or operating mobile construction equipment, explosives work, work at heights over 2 meters without standard railings, electrical work, entering excavations, and work with toxic substances.

-- End of Section --

SECTION 01770

SPECIFICATION SECTION 01770

CLOSEOUT PROCEDURES

PART 1: GENERAL

1.1 SUBMITTALS

Government approval is required for submittals with a "G" designation; submittals not having a "G" designation are for information only. When used, a designation following the "G" designation identifies the office that will review the submittal for the Government. The following shall be submitted in accordance with Section 01335 SUBMITTAL PROCEDURES:

SD-10 Operation and Maintenance Data
Equipment/Product Warranty List; G
Submit Data Package 1 in accordance with Section 01781 OPERATION AND MAINTENANCE DATA.

SD-11 Closeout Submittals
As-Built Drawings; G
Record Of Materials; G
Equipment/Product Warranty Tag; G

1.2 PROJECT RECORD DOCUMENTS

1.2.1 As-Built Drawings

As built drawings shall be submitted in accordance with Section 01015 SPECIAL CONDITIONS

1.2.2 As-Built Record of Materials

Furnish a record of materials.

Where several manufacturers' brands, types, or classes of the item listed have been used in the project, designate specific areas where each item was used. Designations shall be keyed to the areas and spaces depicted on the contract drawing. Furnish the record of materials used in the following format:

MATERIALS DESIGNATION	SPECIFICATION	MANUFACTURER	MATERIALS USED (MANUFACTURER'S DESIGNATION)	WHERE USED

1.3 EQUIPMENT/PRODUCT WARRANTIES

1.3.1 Equipment/Product Warranty List

The Contractor shall develop a warranty management plan which shall contain information relevant to the clause Warranty of Construction. At least 30 days before the planned pre-warranty conference, the Contractor shall submit the warranty management plan for Government approval. The warranty management plan shall include all required actions and documents to assure that the Government receives all warranties to which it is entitled. The plan shall be in narrative form and contain sufficient detail to render it suitable for use by future maintenance and repair personnel, whether tradesmen, or of engineering background, not necessarily familiar with this contract. The term "status" as indicated below shall include due date and whether item has been submitted or was accomplished. Warranty information made available during the construction phase shall be submitted to the Contracting Officer for approval prior to each monthly pay estimate. Approved information shall be assembled in a binder and shall be turned over to the Government upon acceptance of the work. The construction warranty period shall begin on the date of project acceptance and shall continue for the full product warranty period. A joint 4 month and 9 month warranty inspection shall be conducted, measured from time of acceptance, by the Contractor, Contracting Officer and the Customer Representative. Information contained in the warranty management plan shall include, but shall not be limited to, the following:

a. Roles and responsibilities of all personnel associated with the warranty process, including points of contact and telephone numbers within the organizations of the Contractors, subcontractors, manufacturers or suppliers involved.

b. Listing and status of delivery of all Certificates of Warranty for extended warranty items, to include roofs, HVAC balancing, pumps, motors, transformers, and for all commissioned systems such as fire protection and alarm systems, sprinkler systems, lightning protection systems, etc.

c. A list for each warranted equipment, item, feature of construction or system indicating:

1. Name of item.
2. Model and serial numbers.
3. Location where installed.
4. Name and phone numbers of manufacturers or suppliers.
5. Names, addresses and telephone numbers of sources of spare parts.
6. Warranties and terms of warranty. This shall include one-year overall warranty of construction. Items which have extended warranties shall be indicated with separate warranty expiration dates.
7. Cross-reference to warranty certificates as applicable.
8. Starting point and duration of warranty period.
9. Summary of maintenance procedures required to continue the warranty in force.
10. Cross-reference to specific pertinent Operation and Maintenance manuals.
11. Organization, names and phone numbers of persons to call for warranty service.
12. Typical response time and repair time expected for various warranted equipment.

d. The Contractor's plans for attendance at the 4 and 9 month post-construction warranty inspections conducted by the Government.

e. Procedure and status of tagging of all equipment covered by extended warranties.

f. Copies of instructions to be posted near selected pieces of equipment where operation is critical for warranty and/or safety reasons.

1.3.2 Performance of Warranty Work

In the event the Contractor fails to commence and diligently pursue any construction warranty work required, the Contracting Officer will have the work performed by others, and after completion of the

work, will charge the remaining construction warranty funds of expenses incurred by the Government while performing the work, including, but not limited to administrative expenses.

Following oral or written notification of required construction warranty repair work, the Contractor shall respond in a timely manner. Written verification will follow oral instructions. Failure of the Contractor to respond will be cause for the Contracting Officer to proceed against the Contractor.

1.3.3 Pre-Warranty Conference

Prior to contract completion, and at a time designated by the Contracting Officer, the Contractor shall meet with the Contracting Officer to develop a mutual understanding with respect to the requirements of this section. Communication procedures for Contractor notification of construction warranty defects, priorities with respect to the type of defect, reasonable time required for Contractor response, and other details deemed necessary by the Contracting Officer for the execution of the construction warranty shall be established/reviewed at this meeting. In connection with these requirements and at the time of the Contractor's quality control completion inspection, the Contractor shall furnish the name, telephone number and address of a licensed and bonded company which is authorized to initiate and pursue construction warranty work action on behalf of the Contractor. This point of contact will be located within the local service area of the warranted construction, shall be continuously available, and shall be responsive to Government inquiry on warranty work action and status. This requirement does not relieve the Contractor of any of its responsibilities in connection with other portions of this provision.

1.3.4 Warranty Tags

At the time of installation, each warranted item shall be tagged with a durable, oil and water resistant tag approved by the Contracting Officer. Each tag shall be attached with a copper wire and shall be sprayed with a silicone waterproof coating. The date of acceptance and the QC signature shall remain blank until project is accepted for beneficial occupancy. The tag shall show the following information.

a. Type of product/material _____
b. Model number _____
c. Serial number_____
d. Contract number _____
e. Warranty period _____ from _____ to _____
f. Inspector's signature _____
g. Construction Contractor_____
Address _____
Telephone number_____
h. Warranty contact _____
Address _____
Telephone number_____
i. Warranty response time priority code _____
j. WARNING - PROJECT PERSONNEL TO PERFORM ONLY OPERATIONAL MAINTENANCE DURING THE WARRANTY PERIOD.

1.4 MECHANICAL TESTING AND BALANCING

All contract requirements for testing/adjusting/balancing shall be fully completed, including all testing, prior to contract completion date. The time required to complete all testing/adjusting/balancing is included in the allotted calendar days for completion.

1.5 FINAL CLEANING

The premises shall be left broom clean. Stains, foreign substances, and temporary labels shall be removed from surfaces. Carpet and soft surfaces shall be vacuumed. Equipment and fixtures shall be cleaned to a sanitary condition. Filters of operating equipment shall be replaced. Debris shall be removed from roofs, drainage systems, gutters, and downspouts. Paved areas shall be swept and landscaped areas shall be raked clean. The site shall have waste, surplus materials, and rubbish removed. The project area shall have temporary structures, barricades, project signs, and construction facilities removed. A list of completed clean-up items shall be submitted on the day of final inspection.

PART 2 PRODUCTS

Not used.

PART 3 EXECUTION

Not used.

-- End of Section --

SECTION 01780

SECTION 01780A

CLOSEOUT SUBMITTALS

PART 1 GENERAL

1.1 SUBMITTALS

Government approval is required for submittals with a "G" designation; submittals not having a "G" designation are for Contractor Quality Control approval. When used, a designation following the "G" designation identifies the office that will review the submittal for the Government. The following shall be submitted in accordance with Section 01335 SUBMITTAL PROCEDURES:

SD-02 Shop Drawings

As-Built Drawings

Drawings showing final as-built conditions of the project. The final CADD as-built drawings shall consist of one set of electronic CADD drawing files in the specified format, one set of mylar drawings, 2 sets of blue-line prints of the mylars, and one set of the approved working as-built drawings.

SD-03 Product Data

As-Built Record of Equipment and Materials

Two copies of the record listing the as-built materials and equipment incorporated into the construction of the project.

Warranty Management Plan

One set of the warranty management plan containing information relevant to the warranty of

materials and equipment incorporated into the construction project, including the starting date of warranty of construction. The Contractor shall furnish with each warranty the name, address, and telephone number of each of the guarantor's representatives nearest to the project location.

Warranty Tags

Two record copies of the warranty tags showing the layout and design.

Final Cleaning

Two copies of the listing of completed final clean-up items.

1.2 PROJECT RECORD DOCUMENTS

1.2.1 As-Built Drawings

This paragraph covers as-built drawings complete, as a requirement of the contract. The terms "drawings," "contract drawings," "drawing files," "working as-built drawings" and "final as-built drawings" refer to contract drawings which are revised to be used for final as-built drawings.

1.2.1.1 Government Furnished Materials

One set of electronic CADD files in the specified software and format revised to reflect all bid amendments will be provided by the Government at the preconstruction conference for projects requiring CADD file as-built drawings.

1.2.1.2 Working As-Built and Final As-Built Drawings

The Contractor shall revise 2 sets of paper drawings by red-line process to show the as-built conditions during the prosecution of the project. These working as-built marked drawings shall be kept current on a weekly basis and at least one set shall be available on the jobsite at all times. Changes from the contract plans which are made in the work or additional information which might be uncovered in the course of construction shall be accurately and neatly recorded as they occur by means of details and notes. Final as-built drawings shall be prepared after the completion of each definable feature of work as listed in the Contractor Quality Control Plan (Foundations, Utilities, Structural Steel, etc., as appropriate for the project). The working as-built marked prints and final as-built drawings will be jointly reviewed for accuracy and completeness by the Contracting Officer and the Contractor prior to submission of each monthly pay estimate. If the Contractor fails to maintain the working and final as-built drawings as specified herein, the Contracting Officer will deduct from the monthly progress payment an amount representing the estimated cost of maintaining the as-built drawings. This monthly deduction will continue until an agreement can be reached between the Contracting Officer and the Contractor regarding the accuracy and completeness of updated drawings. The working and final as-built drawings shall show, but shall not be limited to, the following information:

a. The actual location, kinds and sizes of all sub-surface utility lines. In order that the location of these lines and appurtenances may be determined in the event the surface openings or indicators become covered over or obscured, the as-built drawings shall show, by offset dimensions to two permanently fixed surface features, the end of each run including each change in direction. Valves splice boxes and similar appurtenances shall be located by dimensioning along the utility run from a reference point. The average depth below the surface of each run shall also be recorded.

b. The location and dimensions of any changes within the building structure.

c. Correct grade, elevations, cross section, or alignment of roads, earthwork, structures or utilities if any changes were made from contract plans.

d. Changes in details of design or additional information obtained from working drawings specified to be prepared and/or furnished by the Contractor; including but not limited to fabrication, erection, installation plans and placing details, pipe sizes, insulation material, dimensions of equipment foundations, etc.

e. The topography, invert elevations and grades of drainage installed or affected as part of the project construction.

f. Changes or modifications which result from the final inspection.

g. Where contract drawings or specifications present options, only the option selected for construction shall be shown on the final as-built prints.

h. If borrow material for this project is from sources on Government property, or if Government property is used as a spoil area, the Contractor shall furnish a contour map of the final borrow pit/spoil area elevations.

i. Systems designed or enhanced by the Contractor, such as HVAC controls, fire alarm, fire sprinkler, and irrigation systems.

j. Modifications (change order price shall include the Contractor's cost to change working and final as-built drawings to reflect modifications) and compliance with the following procedures.

(1) Directions in the modification for posting descriptive changes shall be followed.

(2) A Modification Circle shall be placed at the location of each deletion.

(3) For new details or sections which are added to a drawing, a Modification Circle shall be placed by the detail or section title.

(4) For minor changes, a Modification Circle shall be placed by the area changed on the drawing (each location).

(5) For major changes to a drawing, a Modification Circle shall be placed by the title of the affected plan, section, or detail at each location.

(6) For changes to schedules or drawings, a Modification Circle shall be placed either by the schedule heading or by the change in the schedule.

(7) The Modification Circle size shall be 12.7 mm 1/2 inch diameter unless the area where the circle is to be placed is crowded. Smaller size circle shall be used for crowded areas.

1.2.1.3 Drawing Preparation

The as-built drawings shall be modified as may be necessary to correctly show the features of the project as it has been constructed by bringing the contract set into agreement with approved working as-built prints, and adding such additional drawings as may be necessary. These working as-built marked prints shall be neat, legible and accurate. These drawings are part of the permanent records of this project and shall be returned to the Contracting Officer after approval by the Government. Any drawings damaged or lost by the Contractor shall be satisfactorily replaced by the Contractor at no expense to the Government.

1.2.1.4 Computer Aided Design and Drafting (CADD) Drawings

Only personnel proficient in the preparation of CADD drawings shall be employed to modify the contract drawings or prepare additional new drawings. Additions and corrections to the contract drawings shall be equal in quality and detail to that of the originals. Line colors, line weights, lettering, layering conventions, and symbols shall be the same as the original line colors, line weights, lettering, layering conventions, and symbols. If additional drawings are required, they shall be prepared using the specified electronic file format applying the same graphic standards specified for original drawings. The title block and drawing border to be used for any new final as-built drawings shall be identical to that used on the contract drawings. Additions and corrections to the contract drawings shall be accomplished using CADD files. The Contractor will be furnished "as-designed" drawings in AutoCad Release 2000 or Microstation V8 format compatible with a Window 2000 or Windows XP operating system. The electronic files will be supplied on compact disc, read-only memory (CD-ROM). The Contractor shall be responsible for providing all program files and hardware necessary to prepare final as-built drawings. The Contracting Officer will review final as-built drawings for accuracy and the Contractor shall make required corrections, changes, additions, and deletions.

a. CADD colors shall be the "base" colors of red, green, and blue. Color code for changes shall be as follows:

(1) Deletions (red) - Deleted graphic items (lines) shall be colored red with red lettering in notes and leaders.

(2) Additions (Green) - Added items shall be drawn in green with green lettering in notes and leaders.

(3) Special (Blue) - Items requiring special information, coordination, or special detailing or detailing notes shall be in blue.

b. The Contract Drawing files shall be renamed in a manner related to the contract number (i.e., 98-C-10.DGN) as instructed in the Pre-Construction conference. Marked-up changes shall be made only to those renamed files. All changes shall be made on the layer/level as the original item. There shall be no deletions of existing lines; existing lines shall be over struck in red. Additions shall be in green with line weights the same as the drawing. Special notes shall be in blue on layer#63.

c. When final revisions have been completed, the cover sheet drawing shall show the wording "RECORD DRAWING AS-BUILT" followed by the name of the Contractor in letters at least 5 mm 3/16 inch high. All other contract drawings shall be marked either "AS-Built" drawing denoting no revisions on the sheet or "Revised As-Built" denoting one or more revisions. Original contract drawings shall be dated in the revision block.

d. Within 20days for contracts $5 million and above after Government approval of all of the working as-built drawings for a phase of work, the Contractor shall prepare the final CADD as-built drawings for that phase of work and submit two sets of blue-lined prints of these drawings for Government review and approval. The Government will promptly return one set of prints annotated with any necessary corrections. Within 10 days for contracts $5 million and above the Contractor shall revise the CADD files accordingly at no additional cost and submit one set of final prints for the completed phase of work to the Government. Within 20 days for contracts $5 million and above of substantial completion of all phases of work, the Contractor shall submit the final as-built drawing package for the entire project. The submittal shall consist of one set of electronic files on compact disc, read-only memory (CD-ROM), one set of mylars, two sets of blue-line prints and one set of the approved working as-built drawings. They shall be complete in all details and identical in form and function to the contract drawing files supplied by the Government. Any transactions or adjustments necessary to accomplish this are the responsibility of the Contractor. The Government reserves the right to reject any drawing files it deems incompatible with the customer's CADD system. Paper prints, drawing files and storage media submitted will become the property of the Government upon final

approval. Failure to submit final as-built drawing files and marked prints as specified shall be cause for withholding any payment due the Contractor under this contract. Approval and acceptance of final as-built drawings shall be accomplished before final payment is made to the Contractor.

1.2.1.5 Payment

No separate payment will be made for as-built drawings required under this contract, and all costs accrued in connection with such drawings shall be considered a subsidiary obligation of the Contractor.

1.2.2 As-Built Record of Equipment and Materials

The Contractor shall furnish one copy of preliminary record of equipment and materials used on the project 15 days prior to final inspection. This preliminary submittal will be reviewed and returned 2 days after final inspection with Government comments. Two sets of final record of equipment and materials shall be submitted 10 days after final inspection. The designations shall be keyed to the related area depicted on the contract drawings. The record shall list the following data:

RECORD OF DESIGNATED EQUIPMENT AND MATERIALS DATA

Description	Specification Section	Manufacturer and Catalog, Model, and Serial Number	Composition and Size	Where Used

1.2.3 Final Approved Shop Drawings

The Contractor shall furnish final approved project shop drawings 30 days after transfer of the completed facility.

1.2.4 Construction Contract Specifications

The Contractor shall furnish final as-built construction contract specifications, including modifications thereto, 30 days after transfer of the completed facility.

1.2.5 Real Property Equipment

The Contractor shall furnish a list of installed equipment furnished under this contract. The list shall include all information usually listed on manufacturer's name plate. The "EQUIPMENT-IN-PLACE LIST" shall include, as applicable, the following for each piece of equipment installed: description of item, location (by room number), model number, serial number, capacity, name and address of manufacturer, name and address of equipment supplier, condition, spare parts list, manufacturer's catalog, and warranty. A draft list shall be furnished at time of transfer. The final list shall be furnished 30 days after transfer of the completed facility.

1.3 WARRANTY MANAGEMENT

1.3.1 Warranty Management Plan

The Contractor shall develop a warranty management plan which shall contain information relevant to the clause Warranty of Construction. At least 30 days before the planned pre-warranty conference, the Contractor shall submit the warranty management plan for Government approval. The warranty management plan shall include all required actions and documents to assure that the Government receives all warranties to which it is entitled. The plan shall be in narrative form and contain sufficient detail to render it suitable for use by future maintenance and repair personnel, whether tradesmen, or

of engineering background, not necessarily familiar with this contract. The term "status" as indicated below shall include due date and whether item has been submitted or was accomplished. Warranty information made available during the construction phase shall be submitted to the Contracting Officer for approval prior to each monthly pay estimate. Approved information shall be assembled in a binder and shall be turned over to the Government upon acceptance of the work. The construction warranty period shall begin on the date of project acceptance and shall continue for the full product warranty period. A joint 4 month and 9 month warranty inspection shall be conducted, measured from time of acceptance, by the Contractor, Contracting Officer and the Customer Representative. Information contained in the warranty management plan shall include, but shall not be limited to, the following:

a. Roles and responsibilities of all personnel associated with the warranty process, including points of contact and telephone numbers within the organizations of the Contractors, subcontractors', manufacturers or suppliers involved.

b. Listing and status of delivery of all Certificates of Warranty for extended warranty items, to include roofs, HVAC balancing, pumps, motors, transformers, and for all commissioned systems such as fire protection and alarm systems, sprinkler systems, lightning protection systems, etc.

c. A list for each warranted equipment, item, feature of construction or system indicating:

1. Name of item.
2. Model and serial numbers.
3. Location where installed.
4. Name and phone numbers of manufacturers or suppliers.
5. Names, addresses and telephone numbers of sources of spare parts.
6. Warranties and terms of warranty. This shall include one-year overall warranty of construction. Items which have extended warranties shall be indicated with separate warranty expiration dates.
7. Cross-reference to warranty certificates as applicable.
8. Starting point and duration of warranty period.
9. Summary of maintenance procedures required to continue the warranty in force.
10. Cross-reference to specific pertinent Operation and Maintenance manuals.
11. Organization, names and phone numbers of persons to call for warranty service.
12. Typical response time and repair time expected for various warranted equipment.

d. The Contractor's plans for attendance at the 4 and 9 month post-construction warranty inspections conducted by the Government.

e. Procedure and status of tagging of all equipment covered by extended warranties.

f. Copies of instructions to be posted near selected pieces of equipment where operation is critical for warranty and/or safety reasons.

1.3.2 Pre-Warranty Conference

Prior to contract completion, and at a time designated by the Contracting Officer, the Contractor shall meet with the Contracting Officer to develop a mutual understanding with respect to the requirements of this section. Communication procedures for Contractor notification of construction warranty defects, priorities with respect to the type of defect, reasonable time required for Contractor response, and other details deemed necessary by the Contracting Officer for the execution of the construction warranty shall be established/reviewed at this meeting. In connection with these requirements and at the time of the Contractor's quality control completion inspection, the Contractor shall furnish the name, telephone number and address of a licensed and bonded company which is authorized to initiate and pursue construction warranty work action on behalf of the Contractor. This point of contact will be located within the local service area of the warranted construction, shall be continuously available, and shall be responsive to Government inquiry on warranty work action and status. This requirement does not relieve the Contractor of any of its responsibilities in connection with other

portions of this provision.

1.3.3 Contractor's Response to Construction Warranty Service Requirements

Following oral or written notification by the Contracting Officer, the Contractor shall respond to construction warranty service requirements in accordance with the "Construction Warranty Service Priority List" and the three categories of priorities listed below. The Contractor shall submit a report on any warranty item that has been repaired during the warranty period. The report shall include the cause of the problem, date reported, corrective action taken, and when the repair was completed. If the Contractor does not perform the construction warranty within the timeframes specified, the Government will perform the work and back charge the construction warranty payment item established.

a. First Priority Code 1. Perform onsite inspection to evaluate situation, and determine course of action within 4 hours, initiate work within 6 hours and work continuously to completion or relief.

b. Second Priority Code 2. Perform onsite inspection to evaluate situation, and determine course of action within 8 hours, initiate work within 24 hours and work continuously to completion or relief.

c. Third Priority Code 3. All other work to be initiated within 3 work days and work continuously to completion or relief.

d. The "Construction Warranty Service Priority List" is as follows:

Code 1-Air Conditioning Systems
1) Recreational support.
2) Air conditioning leak in part of building, if causing damage.
3) Air conditioning system not cooling properly.

Code 1-Doors
1) Overhead doors not operational, causing a security, fire, or safety problem.
2) Interior, exterior personnel doors or hardware, not functioning properly, causing a security, fire, or safety problem.

Code 3-Doors
1) Overhead doors not operational.
2) Interior/exterior personnel doors or hardware not functioning properly.

Code 1-Electrical
1) Power failure (entire area or any building operational after 1600 hours).
2) Security lights
3) Smoke detectors

Code 2-Electrical
1) Power failure (no power to a room or part of building).
2) Receptacle and lights (in a room or part of building).

Code 3-Electrical
Street lights.

Code 1-Gas
1) Leaks and breaks.
2) No gas to family housing unit or cantonment area.

Code 1-Heat

1) Area power failure affecting heat.
2) Heater in unit not working.

Code 2-Kitchen Equipment

1) Dishwasher not operating properly.
2) All other equipment hampering preparation of a meal.

Code 1-Plumbing

1) Hot water heater failure.
2) Leaking water supply pipes.

Code 2-Plumbing

1) Flush valves not operating properly.
2) Fixture drain, supply line to commode, or any water pipe leaking.
3) Commode leaking at base.

Code 3 –Plumbing

Leaky faucets

Code 3-Interior

1) Floors damaged.
2) Paint chipping or peeling.
3) Casework.

Code 1-Roof Leaks

Temporary repairs will be made where major damage to property is occurring.

Code 2-Roof Leaks

Where major damage to property is not occurring, check for location of leak during rain and complete repairs on a Code 2 basis

Code 2-Water (Exterior)

No water to facility.

Code 2-Water (Hot)

No hot water in portion of building listed.

Code 3-All other work not listed above.

1.3.5 Warranty Tags

At the time of installation, each warranted item shall be tagged with a durable, oil and water resistant tag approved by the Contracting Officer. Each tag shall be attached with a copper wire and shall be sprayed with a silicone waterproof coating. The date of acceptance and the QC signature shall remain blank until project is accepted for beneficial occupancy. The tag shall show the following information.

a. Type of product/material_____.

b. Model number_____.

c. Serial number_____.

d. Contract number_____.

e. Warranty period_____from_____to_____.

f. Inspector's signature_____.

g. Construction Contractor_____.
Address_____. Telephone number_____.

h. Warranty contact_____.
Address_____. Telephone number_____.

i. Warranty response time priority code_____.

j. WARNING - PROJECT PERSONNEL TO PERFORM ONLY OPERATIONAL MAINTENANCE DURING THE WARRANTY PERIOD.

1.4 MECHANICAL TESTING, ADJUSTING, BALANCING, AND COMMISSIONING

Prior to final inspection and transfer of the completed facility; all reports, statements, certificates, and completed checklists for testing, adjusting, balancing, and commissioning of mechanical systems shall be submitted to and approved by the Contracting Officer as specified inapplicable technical specification sections.

1.5 OPERATION AND MAINTENANCE MANUALS

Operation manuals and maintenance manuals shall be submitted as specified. Operation manuals and maintenance manuals provided in a common volume shall be clearly differentiated and shall be separately indexed.

1.6 FINAL CLEANING

The premises shall be left broom clean. Stains, foreign substances, and temporary labels shall be removed from surfaces. Carpet and soft surfaces shall be vacuumed. Equipment and fixtures shall be cleaned to a sanitary condition. Filters of operating equipment shall be replaced. Debris shall be removed from roofs, drainage systems, gutters, and downspouts. Paved areas shall be swept and landscaped areas shall be raked clean. The site shall have waste, surplus materials, and rubbish removed. The project area shall have temporary structures, barricades, project signs, and construction facilities removed. A list of completed clean-up items shall be submitted on the day of final inspection.

PART 2 PRODUCTS (NOT USED)

PART 3 EXECUTION (NOT USED)

-- End of Section -

SECTION 01781

SECTION 01781

OPERATION AND MAINTENANCE DATA

PART 1GENERAL

1.1 SUBMISSION OF OPERATION AND MAINTENANCE DATA

Submit Operation and Maintenance (O&M) Data specifically applicable to this contract and a complete and concise depiction of the provided equipment, product, or system. Organize and present information in sufficient detail to clearly explain O&M requirements at the system, equipment, component, and subassembly level. Include an index preceding each submittal. Submit in accordance with this section and Section 01335 SUBMITTAL PROCEDURES.

1.1.1 Package Quality

Documents must be fully legible. Poor quality copies and material with hole punches obliterating the text or drawings will not be accepted.

1.1.2 Package Content

Data package content shall be as shown in the paragraph titled "Schedule of Operation and Maintenance Data Packages." Comply with the data package requirements specified in the individual technical sections, including the content of the packages and addressing each product, component, and system designated for data package submission.

1.1.3 Changes to Submittals

Manufacturer-originated changes or revisions to submitted data shall be furnished by the Contractor if a component of an item is so affected subsequent to acceptance of the O&M Data. Changes, additions, or revisions required by the Contracting Officer for final acceptance of submitted data, shall be submitted by the Contractor within 30 calendar days of the notification of this change requirement.

1.2 TYPES OF INFORMATION REQUIRED IN O&M DATA PACKAGES

1.2.1 Operating Instructions

Include specific instructions, procedures, and illustrations for the following phases of operation:

1.2.1.1 Safety Precautions

List personnel hazards and equipment or product safety precautions for all operating conditions.

1.2.1.2 Operator Prestart

Include procedures required to set up and prepare each system for use.

1.2.1.3 Startup, Shutdown, and Post-Shutdown Procedures

Provide narrative description for Startup, Shutdown and Post-shutdown operating procedures including the control sequence for each procedure.

1.2.1.4 Normal Operations

Provide narrative description of Normal Operating Procedures. Include Control Diagrams with data to explain operation and control of systems and specific equipment.

1.2.1.5 Emergency Operations

Include Emergency Procedures for equipment malfunctions to permit a short period of continued operation or to shut down the equipment to prevent further damage to systems and equipment.

Include Emergency Shutdown Instructions for fire, explosion, spills, or other foreseeable contingencies. Provide guidance and procedures for emergency operation of all utility systems including required valve positions, valve locations and zones or portions of systems controlled.

1.2.1.6 Operator Service Requirements

Include instructions for services to be performed by the operator such as lubrication, adjustment, inspection, and recording gage readings.

1.2.1.7 Environmental Conditions

Include a list of Environmental Conditions (temperature, humidity, and other relevant data) that are best suited for the operation of each product, component or system. Describe conditions under which the item equipment should not be allowed to run.

1.2.2 Preventive Maintenance

Include the following information for preventive and scheduled maintenance to minimize corrective maintenance and repair.

1.2.2.1 Lubrication Data

Include preventative maintenance lubrication data, in addition to instructions for lubrication provided under paragraph titled "Operator Service Requirements":

a. A table showing recommended lubricants for specific temperature ranges and applications.
b. Charts with a schematic diagram of the equipment showing lubrication points, recommended types and grades of lubricants, and capacities.
c. A Lubrication Schedule showing service interval frequency.

1.2.2.2 Preventive Maintenance Plan and Schedule

Include manufacturer's schedule for routine preventive maintenance, inspections, tests and adjustments required to ensure proper and economical operation and to minimize corrective maintenance. Provide manufacturer's projection of preventive maintenance work-hours on a daily, weekly, monthly, and annual basis including craft requirements by type of craft. For periodic calibrations, provide manufacturer's specified frequency and procedures for each separate operation.

1.2.3 Corrective Maintenance (Repair)

Include manufacturer's recommended procedures and instructions for correcting problems and making repairs.

1.2.3.1 Troubleshooting Guides and Diagnostic Techniques

Include step-by-step procedures to promptly isolate the cause of typical malfunctions. Describe clearly why the checkout is performed and what conditions are to be sought. Identify tests or inspections and test equipment required to determine whether parts and equipment may be reused or requires replacement.

1.2.3.2 Wiring Diagrams and Control Diagrams

Wiring diagrams and control diagrams shall be point-to-point drawings of wiring and control circuits including factory-field interfaces. Provide a complete and accurate depiction of the actual job specific wiring and control work. On diagrams, number electrical and electronic wiring and

pneumatic control tubing and the terminals for each type, identically to actual installation configuration and numbering.

1.2.3.3 Maintenance and Repair Procedures

Include instructions and a list of tools required to repair or restore the product or equipment to proper condition or operating standards.

1.2.3.4 Removal and Replacement Instructions

Include step-by-step procedures and a list required tools and supplies for removal, replacement, disassembly, and assembly of components, assemblies, subassemblies, accessories, and attachments. Provide tolerances, dimensions, settings and adjustments required. Instructions shall include a combination of text and illustrations.

1.2.3.5 Spare Parts and Supply Lists

Include lists of spare parts and supplies required for maintenance and repair to ensure continued service or operation without unreasonable delays. Special consideration is required for facilities at remote locations. List spare parts and supplies that have a long lead-time to obtain.

1.2.4 Corrective Maintenance Work-Hours

Include manufacturer's projection of corrective maintenance work-hours including requirements by type of craft. Corrective maintenance that requires completion or participation of the equipment manufacturer shall be identified and tabulated separately.

1.2.5 Appendices

Provide information required below and information not specified in the preceding paragraphs but pertinent to the maintenance or operation of the product or equipment. Include the following:

1.2.6 Parts Identification

Provide identification and coverage for all parts of each component, assembly, subassembly, and accessory of the end items subject to replacement. Include special hardware requirements, such as requirement to use high-strength bolts and nuts. Identify parts by make, model, serial number, and source of supply to allow reordering without further identification. Provide clear and legible illustrations, drawings, and exploded views to enable easy identification of the items. When illustrations omit the part numbers and description, both the illustrations and separate listing shall show the index, reference, or key number that will cross-reference the illustrated part to the listed part. Parts shown in the listings shall be grouped by components, assemblies, and subassemblies in accordance with the manufacturer's standard practice. Parts data may cover more than one model or series of equipment, components, assemblies, subassemblies, attachments, or accessories, such as typically shown in a master parts catalog

1.2.6.1 Warranty Information

List and explain the various warranties and include the servicing and technical precautions prescribed by the manufacturers or contract documents in order to keep warranties in force. Include warranty information for primary components such as the compressor of air conditioning system.

1.2.6.2 Personnel Training Requirements

Provide information available from the manufacturers that are needed for use in training designated personnel to properly operate and maintain the equipment and systems.

1.2.6.3 Testing Equipment and Special Tool Information

Include information on test equipment required to perform specified tests and on special tools needed for the operation, maintenance, and repair of components.

1.2.6.4 Contractor Information

Provide a list that includes the name, address, and telephone number of the General Contractor and each Subcontractor who installed the product or equipment, or system. For each item, also provide the name address and telephone number of the manufacturer's representative and service organization most convenient to the project site. Provide the name, address, and telephone number of the product, equipment, and system manufacturers.

PART 2PRODUCTS

Not used.

PART 3EXECUTION

3.1 TRAINING

Unless provided for elsewhere, the Contractor shall provide operational and maintenance training for all systems furnished under this contract in accordance with this section. The training shall not take place until the operation and maintenance manuals are submitted and approved.

Training will be given to personnel responsible for the operation and maintenance of the system at the installation. Orient training to the specific system being installed under this contract. Use operation and maintenance manual as the primary instructional aid in contractor provided activity personnel training. Manuals shall be delivered for each trainee with two additional sets delivered for archiving at the project site. Submit a training course schedule, syllabus, and training materials 14 days prior to the start of training. Obtain approval of the training course before beginning that phase of training. Furnish a qualified instructor approved by the system manufacturer to conduct training for the specific system.

Training manuals shall include an agenda, defined objectives and a detailed description of the subject matter for each lesson. Furnish audio-visual equipment and all other training materials and supplies. A training day is defined as 8 hours of classroom or lab instruction, including two 15 minute breaks and excluding lunch time, Monday through Friday, during the daytime shift in effect at the training facility. For guidance, the Contractor should assume the attendees will have a high school education.

The Contractor shall videotape the training session on VHS tapes and provide the tapes to the Government.

-- End of Section --

CLAUSES INCORPORATED BY REFERENCE

52.211-10	Commencement, Prosecution, and Completion of Work	APR 1984
52.211-12	Liquidated Damages--Construction	SEP 2000

52.211-13	Time Extensions	SEP 2000
52.246-12	Inspection of Construction	AUG 1996
252.232-7003	Electronic Submission of Payment Requests	MAR 2007

CLAUSES INCORPORATED BY FULL TEXT

52.232-5000 PAYMENT FOR MATERIALS DELIVERED OFF-SITE (MAR 1995)--EFARS

(a) Pursuant to FAR clause 52.232-5, Payments Under Fixed Priced Construction Contracts, materials delivered to the contractor at locations other than the site of the work may be taken into consideration in making payments if included in payment estimates and if all the conditions of the General Provisions are fulfilled. Payment for items delivered to locations other than the work site will be limited to: (1) materials required by the technical provisions; or (3) materials that have been fabricated to the point where they are identifiable to an item of work required under this contract.

(b) Such payment will be made only after receipt of paid or receipted invoices or invoices with canceled check showing title to the items in the prime contractor and including the value of material and labor incorporated into the item. In addition to petroleum products, payment for materials delivered off-site is limited to the following items: __"See paragraph a"._____

(End of clause)

52.236-4 PHYSICAL DATA (APR 1984)

Data and information furnished or referred to below is for the Contractor's information. The Government shall not be responsible for any interpretation of or conclusion drawn from the data or information by the Contractor.

(a) The indications of physical conditions on the drawings and in the specifications are the result of site investigations by surveys, core borings, and/or reconnaissance.

(b) Weather conditions: Information regarding weather conditions is available in Technical Specifications Section 01060 for examination by bidders. If additional information concerning weather is required prospective bidders should contact the U.S. Army corps of Engineers, Afghanistan Engineer District, House #1, Street #1, West Wazir Akbar Khan, (behind Amani High School); Kabul, Afghanistan.

(c) Transportation facilities: It shall be the responsibility of the Contractor to make his own investigation of available roads for transportation, of load limits of bridges on the roads, and of other road conditions, which may effect transportation of materials, equipment, and personnel to the site of the work.

(End of clause)

ATTACHMENTS:

Attachments will be issued as separate documents;

Appendix A:

1335a

ANP 1 Story Drawings

Map Takhar Bacakhshan

TRANSMITTAL OF SHOP DRAWINGS, EQUIPMENT DATA, MATERIAL SAMPLES, OR MANUFACTURER'S CERTIFICATES OF COMPLIANCE *(Read instructions on the reverse side prior to initiating this form)*	DATE	TRANSMITTAL NO.

SECTION I - REQUEST FOR APPROVAL OF THE FOLLOWING ITEMS *(This section will be initiated by the contractor)*

TO:	FROM:	CONTRACT NO.	CHECK ONE: ☐ THIS IS A NEW TRANSMITTAL ☐ THIS IS A RESUBMITTAL OF TRANSMITTAL _____
SPECIFICATION SEC. NO. *(Cover only one section with each transmittal)*	PROJECT TITLE AND LOCATION		CHECK ONE: THIS TRANSMITTAL IS FOR ☐ FIO ☐ GOV'T. APPROVAL

ITEM NO. *a.*	DESCRIPTION OF ITEM SUBMITTED *(Type size, model number/etc.)* *b.*	MFG OR CONTR. CAT., CURVE DRAWING OR BROCHURE NO. *(See instruction no. 8)* *c.*	NO. OF COPIES *d.*	CONTRACT REFERENCE DOCUMENT		FOR CONTRACTOR USE CODE *g.*	VARIATION *(See instruction No. 6)* *h.*	FOR CE USE CODE *i.*
				SPEC. PARA. NO. *e.*	DRAWING SHEET NO. *f.*			

REMARKS	**I certify that the above submitted items have been reviewed in detail and are correct and in strict conformance with the contract drawings and specifications except as other wise stated.** _____ NAME AND SIGNATURE OF CONTRACTOR

SECTION II - APPROVAL ACTION

ENCLOSURES RETURNED *(List by Item No.)*	NAME, TITLE AND SIGNATURE OF APPROVING AUTHORITY	DATE

INSTRUCTIONS

1. Section I will be initiated by the Contractor in the required number of copies.

2. Each transmittal shall be numbered consecutively in the space provided for "Transmittal No.". This number, in addition to the contract number, will form a serial number for identifying each submittal. For new submittals or resubmittals mark the appropriate box; on resubmittals, insert transmittal number of last submission as well as the new submittal number.

3. The "Item No." will be the same "Item No." as indicated on ENG FORM 4288-R for each entry on this form.

4. Submittals requiring expeditious handling will be submitted on a separate form.

5. Separate transmittal form will be used for submittals under separate sections of the specifications.

6. A check shall be placed in the "Variation" column when a submittal is not in accordance with the plans and specifications--also, a written statement to that effect shall be included in the space provided for "Remarks".

7. Form is self-transmittal, letter of transmittal is not required.

8. When a sample of material or Manufacturer's Certificate of Compliance is transmitted, indicate "Sample" or "Certificate" in column c, Section I.

9. U.S. Army Corps of Engineers approving authority will assign action codes as indicated below in space provided in Section I, column i to each item submitted. In addition they will ensure enclosures are indicated and attached to the form prior to return to the contractor. The Contractor will assign action codes as indicated below in Section I, column g, to each item submitted.

THE FOLLOWING ACTION CODES ARE GIVEN TO ITEMS SUBMITTED

A	--	Approved as submitted.	E	--	Disapproved (See attached).
B	--	Approved, except as noted on drawings.	F	--	Receipt acknowledged.
C	--	Approved, except as noted on drawings. Refer to attached sheet resubmission required.	FX	--	Receipt acknowledged, does not comply as noted with contract requirements.
D	--	Will be returned by separate correspondence.	G	--	Other *(Specify)*

10. Approval of items does not relieve the contractor from complying with all the requirements of the contract plans and specifications.

(Reverse of ENG Form 4025-R)

Contractor - Furnished Design Documents Submittal Register	Contract Title & Location:	
	Contractor:	Contract Number:

Submittal Identification Nº.	NAS Activity Code	Description of Document (s)	Contractor Submittal Date	Government Action	
				Receipt Date	Construction Clearance Date

TAC Form 122-E
September 2003(R)

SUBMITTAL REGISTER

(ER 415 1-10)

CONTRACT NO.

TITLE AND LOCATION

CONTRACTOR

SPECIFICATION SECTION

ACTIVITY NO a.	TRANS-MITTAL NO. b.	ITEM NO c.	SPECIFICATION PARAGRAPH NUMBER d.	DESCRIPTION OF ITEM SUBMITTED e.	TYPE OF SUBMITTAL								CLASSI-FICATION		REVIEWER q.	CONTRACTOR SCHEDULE DATES			CONTRACTOR ACTION			GOVERNMENT ACTION		REMARKS z.
					DATA f.	DRAWINGS g.	INSTRUCTIONS h.	SCHEDULES i.	STATEMENTS j.	REPORTS k.	CERTIFICATES l.	SAMPLES m.	RECORDS n.	INFORMATION ONLY o.	GOVERNMENT APPROVED p.		SUBMIT r.	APPROVAL NEEDED BY s.	MATERIAL NEEDED BY t.	CODE u.	DATE v.	SUBMIT TO GOVERN-MENT w.	CODE x.	DATE y.	

ENG FORM 4288-R, MAR 95 EDITION OF SEP 93 IS OBSOLETE.

(Proponent: CEMP-CE)

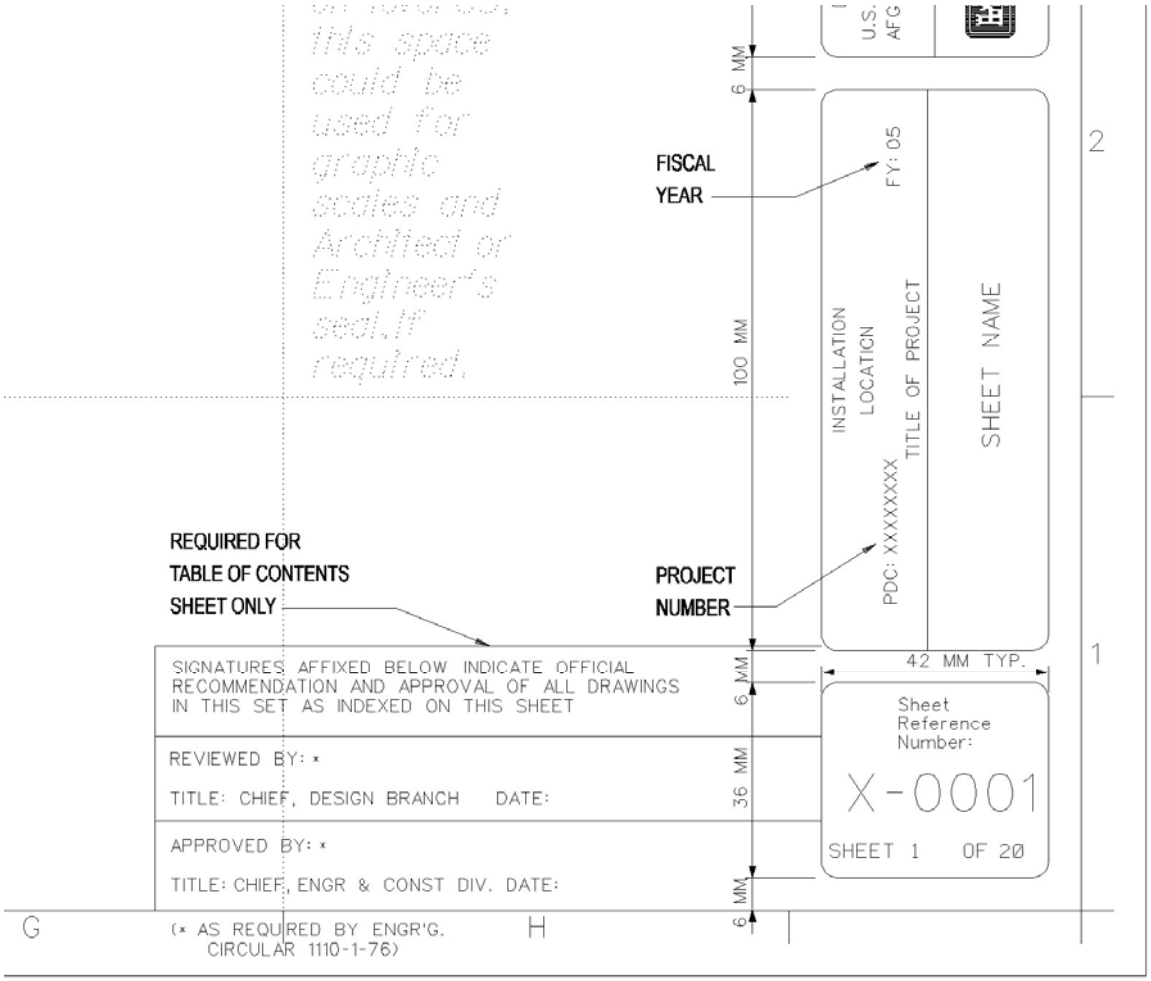

Figure 1 – sheet number/description; AED title block

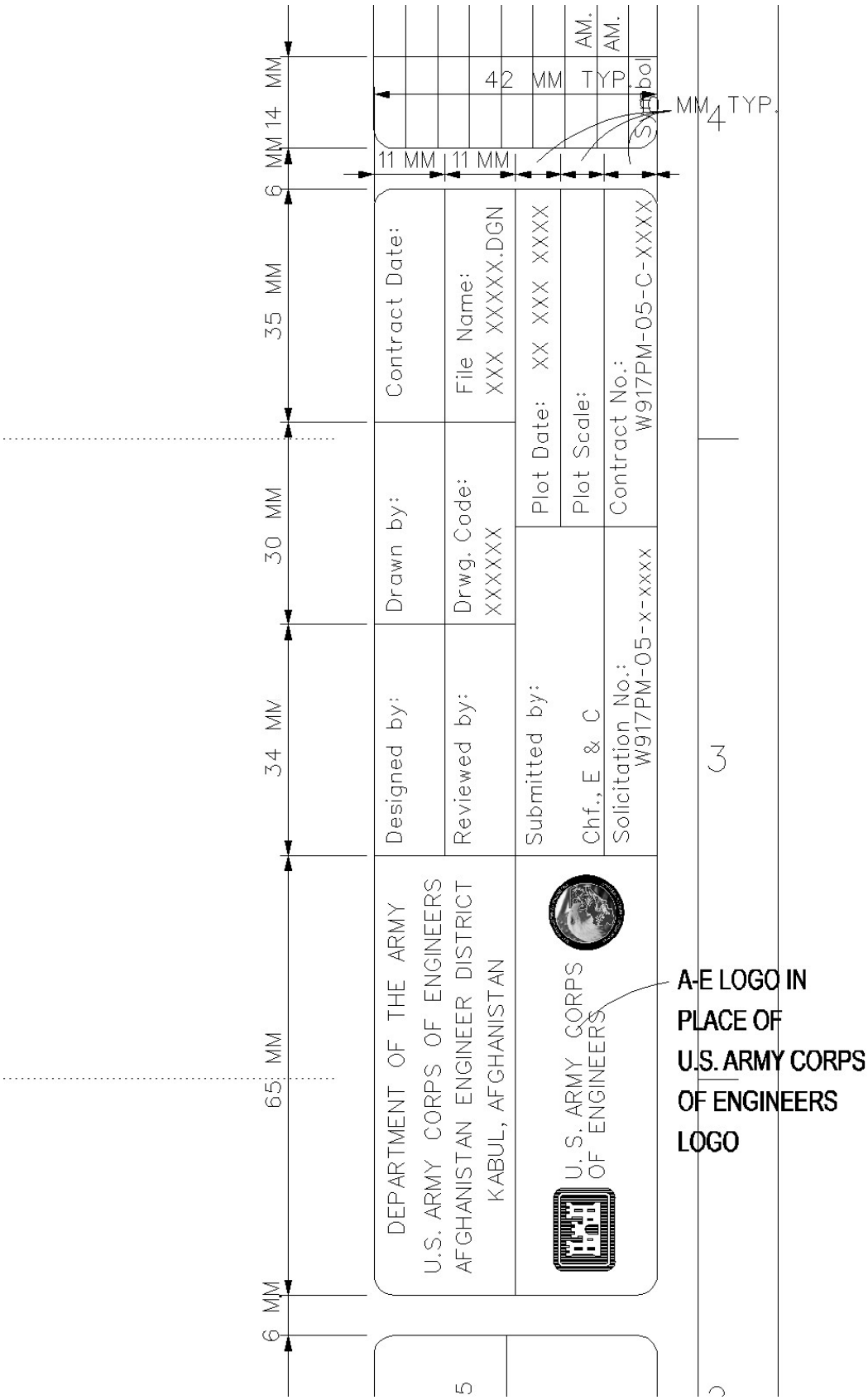

Figure 2 – A-E logo/designed by/reviewed by; AED title block

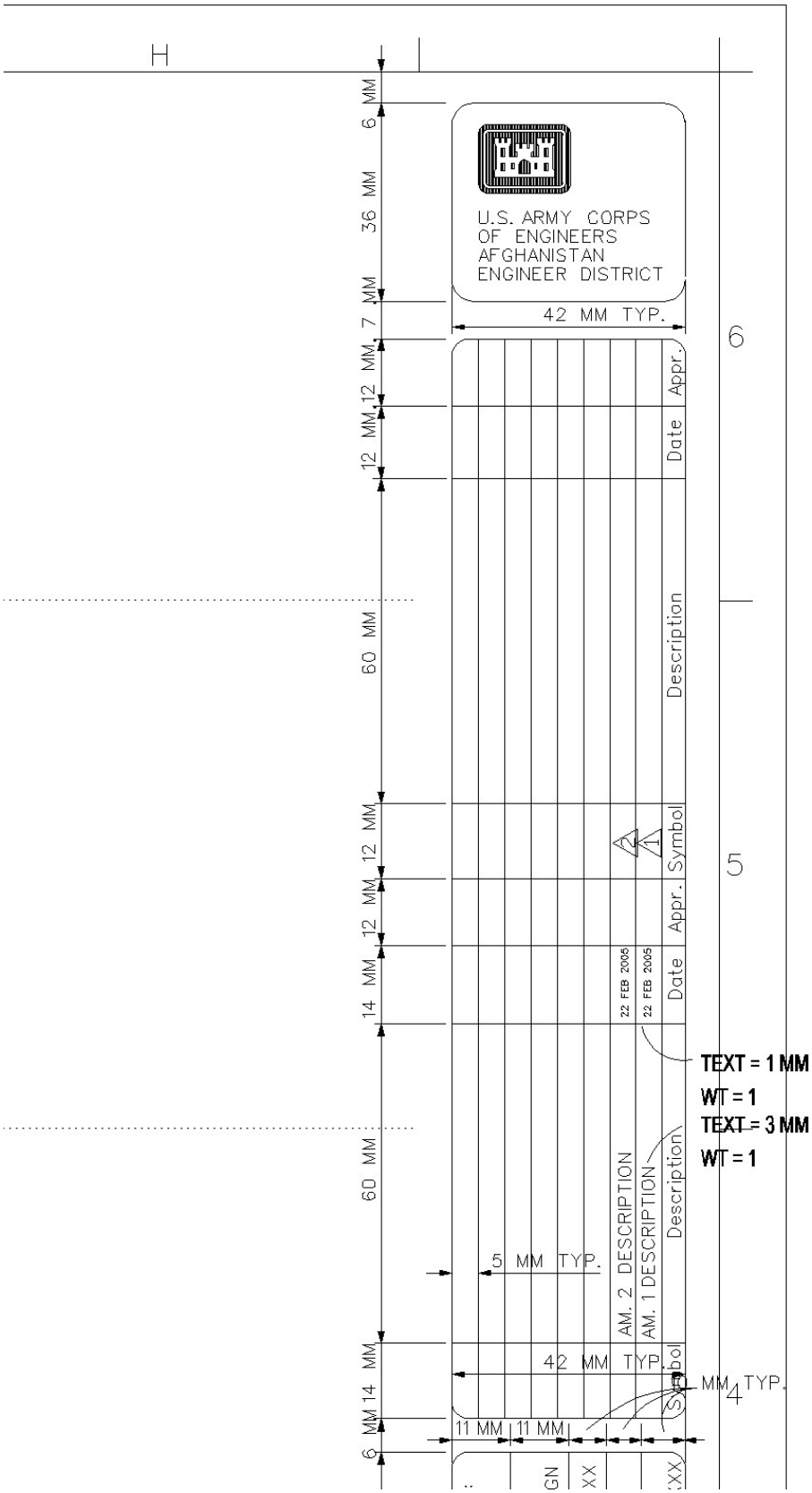

Figure 3 - revision block; AED title block

FINISHED FORMAT SIZE

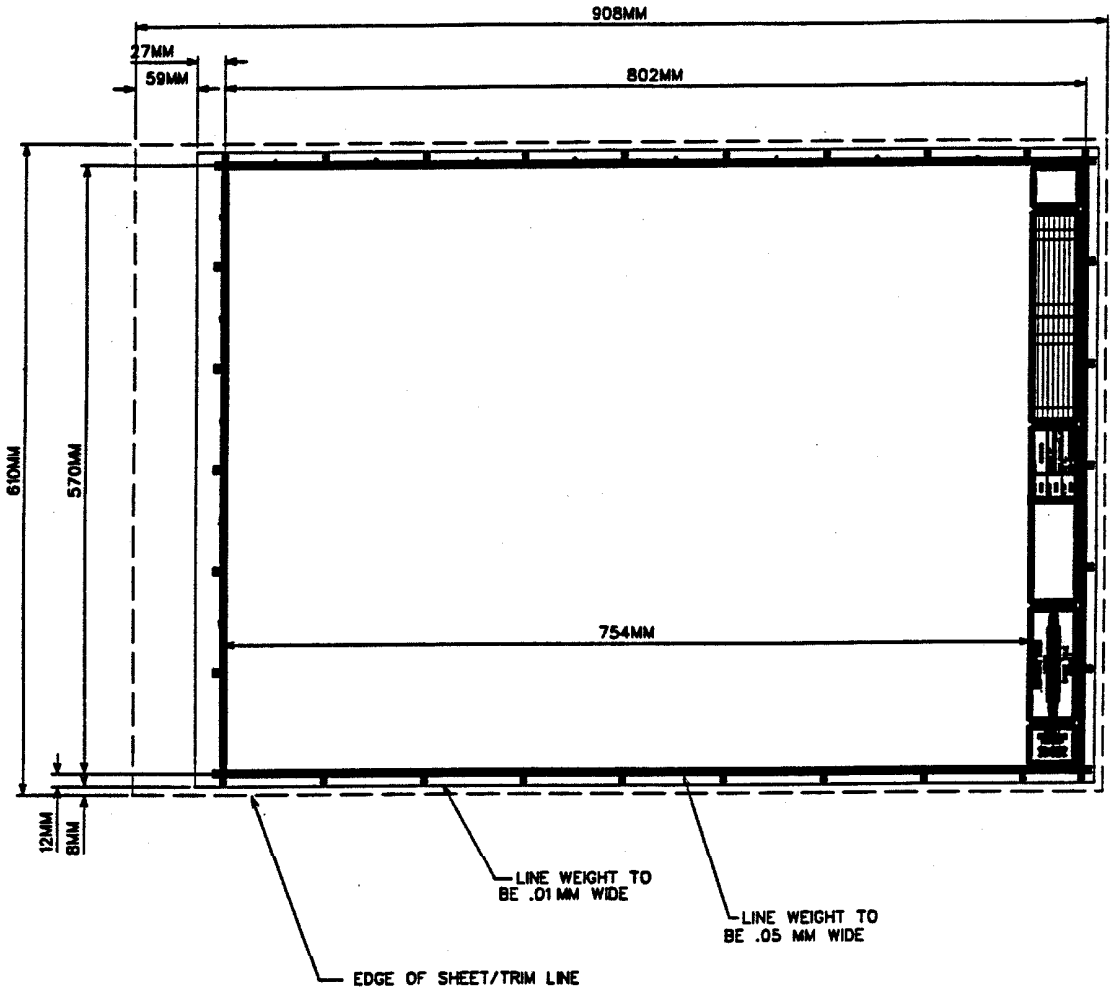

NOTES:

1. SEE FIGURES 6 THRU 9 FOR TITLE BLOCK DEFINITIONS.

Figure 5

Afghanistan National Police (ANP)

District Headquarters Compounds

1 Story HQ

Various Locations, Afghanistan

US Army Corps
of Engineers
Afghanistan Engineer District

29 October 2007

AF0607A–AR061

DRAWING INDEX

SHT.REF. NO.	FILE NO.	REVISIONS REV. NO.	REVISIONS AM/COP NO.	TITLE
				GENERAL
G–1	AF0607––GI01GN			DRAWING INDEX
				SITE DESIGN
C–1	AF0607––CI01PN			SITE PLAN
C–2	AF0607––CI02DT			DETAILS
C–3	AF0607––CI03DT			DETAILS
C–4	AF0607––CI04DT			WELL HOUSE PLAN AND SECTION
C–5	AF0607––CI05DT			SEPTIC TANK DETAILS
XM–1	AF0607––MS01PN			MECHANICAL SITE PLAN
XE–1	AF0607––ES01PN			ELECTRICAL SITE PLAN
				1 STORY BUILDING (A)
A–1	AF0607A–AR01PN			FIRST FLOOR PLAN
A–2	AF0607A–AR02PN			ROOF PLAN
A–3	AF0607A–AR03SE			BUILDING SECTIONS
A–4	AF0607A–AR04SE			WALL SECTION
A–5	AF0607A–AR05EL			BUILDING ELEVATIONS
A–6	AF0607A–AR06EL			BUILDING ELEVATIONS
A–7	AF0607A–AR07LS			ENLARGED TOILET PLANS
A–8	AF0607A–AR08SC			DOOR SCHEDULE AND DOOR TYPES
A–9	AF0607A–AR09SC			ROOM FINISH SCHEDULE
S–1	AF0607A–SB01PN			FOUNDATION PLAN
S–2	AF0607A–SB02PN			GRADE BEAM PLAN
S–3	AF0607A–SB03PN			LOWER ROOF BEAM PLAN
S–4	AF0607A–SB04PN			HIGH ROOF BEAM PLAN
S–5	AF0607A–SB05DT			FOOTING AND COLUMN DETAILS
S–6	AF0607A–SB06DT			BEAM DETAILS
S–7	AF0607A–SB07DT			STANDARD BEAM AND COLUMN DETAILS
M–1	AF0607A–MH01PN			HVAC PLAN
M–2	AF0607A–MH02PN			HEATING PLAN
M–3	AF0607A–MH03PN			ROOF PLAN
P–1	AF0607A–MP01PN			PLUMBING PLAN
P–2	AF0607A–MP02LS			ENLARGED PLUMBING PLANS –DOMESTIC WATER
P–3	AF0607A–MP03LS			ENLARGED PLUMBING PLANS –WASTE AND DRAINS
P–4	AF0607A–MP04LS			ENLARGED PLUMBING PLANS –WASTE AND DRAINS
P–5	AF0607A–MP05DI			DOMESTIC WATER RISER DIAGRAM
P–6	AF0607A–MP06SC			PLUMBING SCHEDULES
E–1	AF0607A–EL01PN			LIGHTING PLAN
E–2	AF0607A–EP02PN			POWER PLAN
E–3	AF0607A–EC03PN			PANEL SCHEDULE
				GUARD TOWER (B)
A–1	AF0607B–AR01PN			FLOOR PLAN, SECTION ELEVATION AND ROOF PLAN
S–1	AF0607B–SB01PN			FOUNDATION AND SLAB PLAN ROOF FRAMING PLAN
E–1	AF0607B–EL01PN			LIGHTING & POWER PLAN
				GUARD SHACK (C)
A–1	AF0607C–AR01PN			FLOOR PLANS AND ELEVATIONS
S–1	AF0607C–SB01PN			FOUNDATION AND SLAB PLAN ROOF FRAMING PLAN
E–1	AF0607C–EL01PN			LIGHTING PLAN
				POWER PLANT (D)
E–1	AF0607D–EP01DI			ONE LINE DIAGRAM
				WELL HOUSE (E)
A–1	AF0607E–AR01PN			FLOOR PLAN, ELEVATIONS AND SCHEDULES
S–1	AF0607E–SB01PN			FOUNDATION PLAN AND ROOF PLAN
S–2	AF0607E–SB02DT			FOOTING DETAILS
S–3	AF0607E–SF03DT			SLAB–ON–GRADE DETAILS
S–4	AF0607E–SF04DT			ROOF BEAM AND STRUCTURAL SLAB DETAILS
M–1	AF0607E–MH01PN			HVAC PLAN
E–1	AF0607E–EL01PN			LIGHTING AND POWER PLAN
E–2	AF0607E–EL02SC			ELECTRICAL SCHEDULES

SHT.REF. NO.	FILE NO.	REVISIONS REV. NO.	REVISIONS AM/COP NO.	TITLE
				STANDARD DETAILS
SA–1	AF0607$–AR01GN			ABBREVIATIONS AND SYMBOLS
SA–2	AF0607$–AR02DT			WALL SECTION AND ROOF DETAILS
SS–1	AF0607$–SB01GN			GENERAL NOTES AND ABBREVIATIONS
SS–2	AF0607$–SB02DT			STANDARD DETAILS
SS–3	AF0607$–SB03DT			DETAILS
SM–1	AF0607$–MH01GN			LEGEND AND ABBREVIATIONS
SM–2	AF0607$–MH02SC			MECHANICAL SCHEDULES
SM–3	AF0607$–MH03DT			MECHANICAL STANDARD DETAILS
SP–1	AF0607$–MP01GN			LEGENDS AND ABBREVIATIONS
SP–2	AF0607$–MP02DT			STANDARD PLUMBING DETAILS
SP–3	AF0607$–MP03DT			STANDARD PLUMBING DETAILS
SE–1	AF0607$–EL01GN			LEGEND AND ABBREVIATIONS
SE–2	AF0607$–EL02DT			STANDARD LIGHTING DETAILS
SE–3	AF0607$–EL03DT			DUCTBANK DETAILS
SE–4	AF0607$–EL04DT			STANDARD ELECTRICAL DETAILS
SE–5	AF0607$–EL05DT			POWER PLANT DETAILS
SE–6	AF0607$–EL06DT			HAND HOLE DETAILS

SYMBOL	DESCRIPTION	DATE	APR

DESIGNED BY: | DATE: 29 OCTOBER 2007
DWN BY: | SUBMITTED BY:
CHK BY: | FILE NO.:

US Army Corps of Engineers
Afghanistan Engineer District

AFGHANISTAN NATIONAL POLICE (ANP) DISTRICT HEADQUARTERS COMPOUNDS – 1 STORY HQ
VARIOUS LOCATIONS, AFGHANISTAN

DRAWING INDEX

SHEET REFERENCE NUMBER:
G–1

10/27/2007
S:\Engineering & Construction\Engineering\00_RFPs in-progress\ANP\ANP ON_1-Story Design\ANP_Dist_HQ_1Story_Design_Changes_26Oct07\Microstation Files\gen\AF0607-GI01GN.dgn

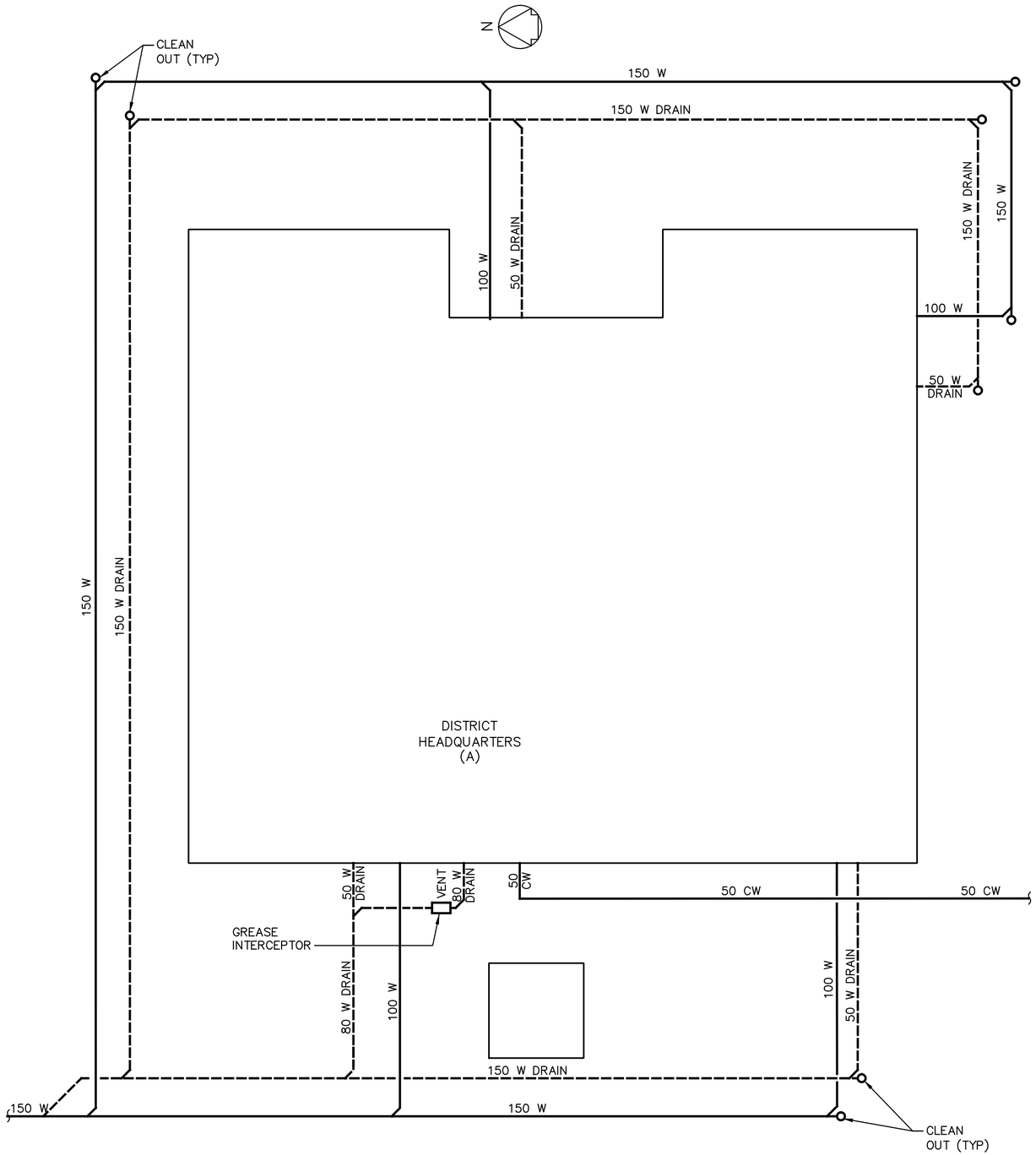

ENLARGED UTILITY SITE PLAN
SCALE= 1:100

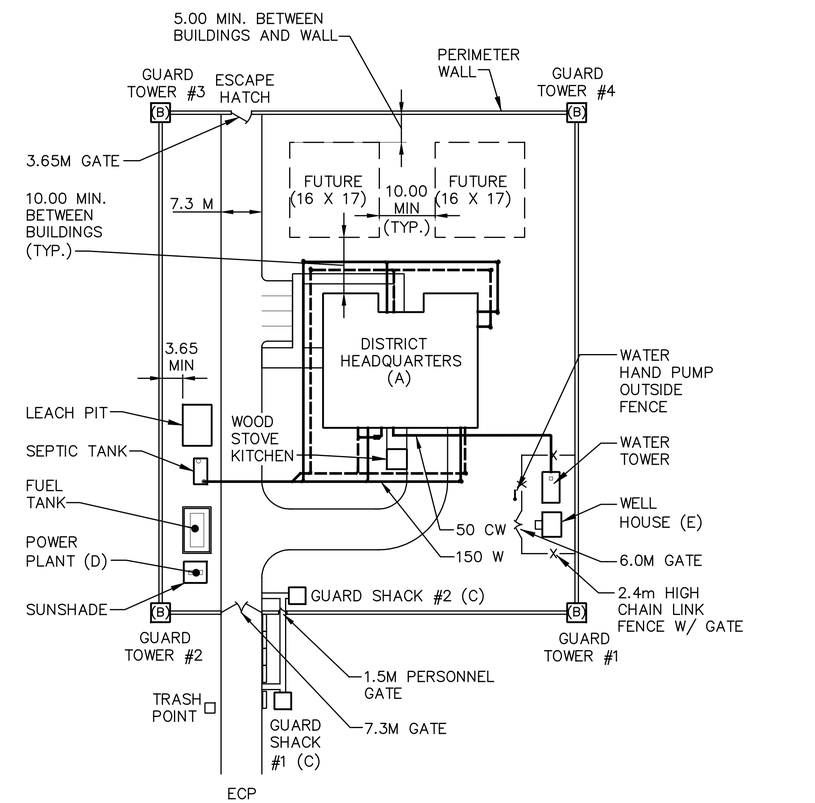

1:100
1:600

SYMBOL	DESCRIPTION	DATE	APR

DESIGNED BY: JLK
DATE: 29 OCTOBER 2007
DWN BY: JLK
SUBMITTED BY:
CHK BY: JLK
FILE NO.: AF0607---C01PN

US Army Corps of Engineers
Afghanistan Engineer District

AFGHANISTAN NATIONAL POLICE (ANP) DISTRICT HEADQUARTERS COMPOUNDS – 1 STORY HQ
VARIOUS LOCATIONS, AFGHANISTAN
SITE DESIGN
SITE PLAN

SHEET REFERENCE NUMBER:
C–1

10/22/2007
S:\Engineering & Construction\Engineering\00_RFPs in-progress\ANP\ANP ONE-Story Design\ANP_Dist_HQ_1Story_Design_Changes_26Oct07\Microstation Files\civil\AF0607-C01PN.dgn

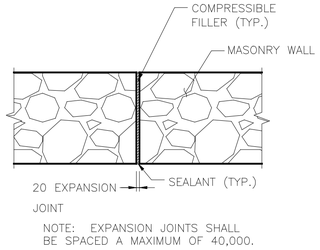

STONE WALL
EXPANSION JOINT DETAIL
NOT TO SCALE

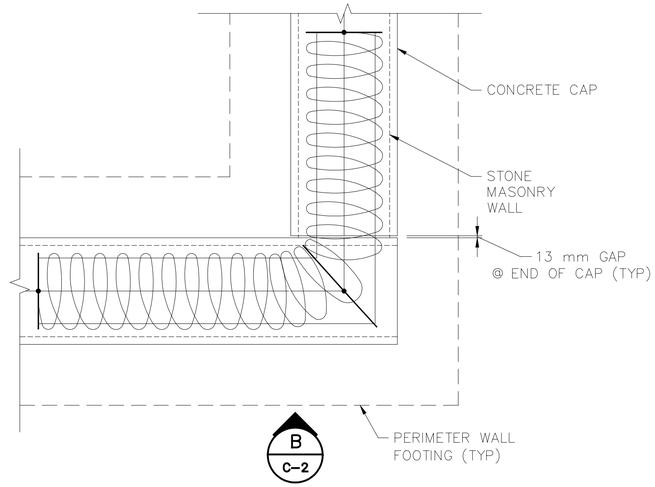

PERIMETER – STONE WALL CORNER – PLAN
(END CONDITION SIMILAR)
NOT TO SCALE

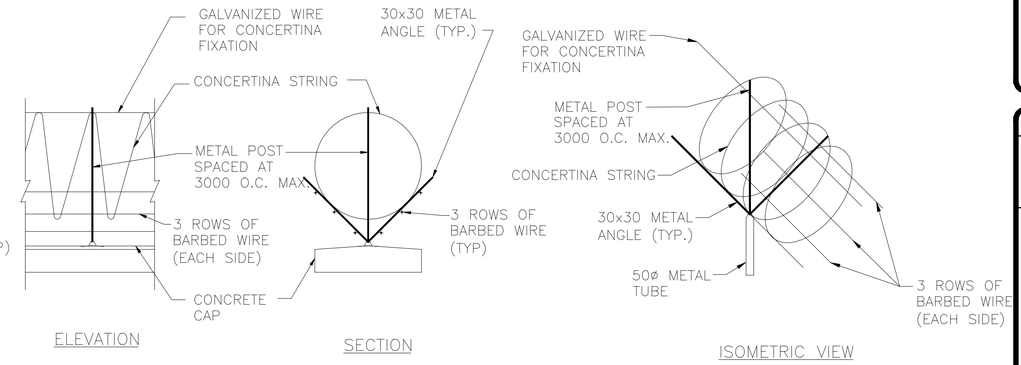

CONCERTINA STRING & BARBED WIRE DETAILS
NOT TO SCALE

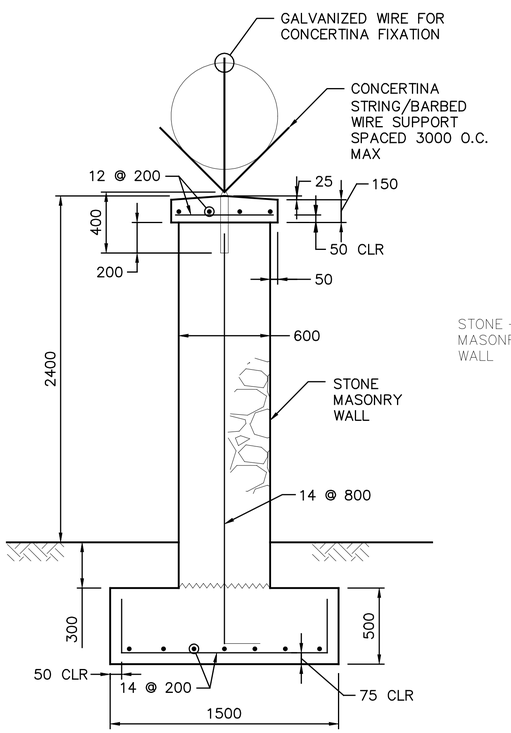

SECTION
SCALE=NO SCALE
A
C-2 C-2

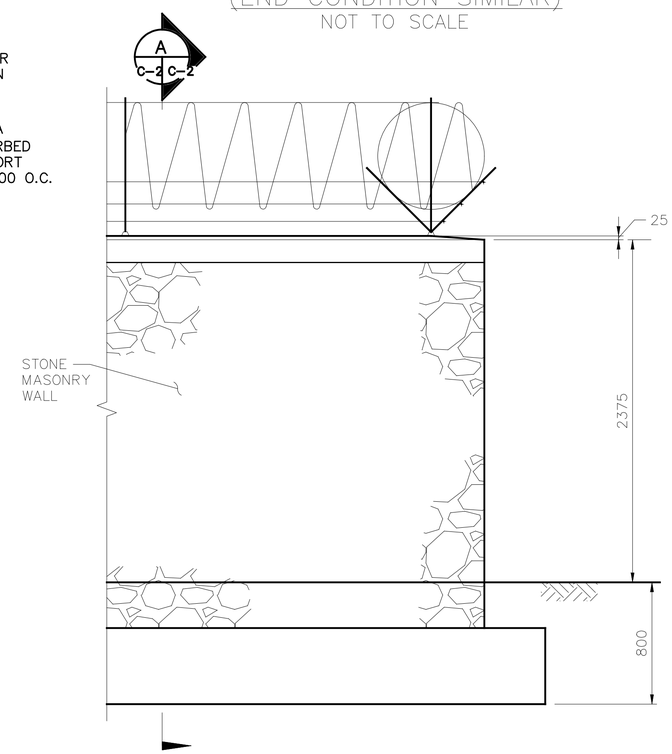

ELEVATION
SCALE=NO SCALE
B
C-2 C-2

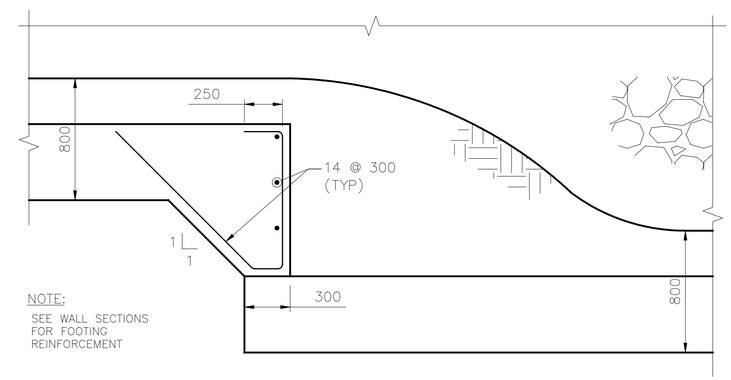

NOTE:
SEE WALL SECTIONS FOR FOOTING REINFORCEMENT

STEPPED FOOTING DETAIL FOR
GRADE CHANGE GREATER THAN 15 DEGREES
NOT TO SCALE

UNLESS OTHERWISE NOTED, LINEAR DIMENSIONS SHOWN ARE IN MILLIMETERS.

SYMBOL	DESCRIPTION	DATE	APR

DESIGNED BY: MW
DATE: 29 OCTOBER 2007
DWN BY: TSR
SUBMITTED BY:
CHK BY: REK
FILE NO.: AF0607-C102DT

US Army Corps of Engineers
Afghanistan Engineer District

AFGHANISTAN NATIONAL POLICE (ANP) DISTRICT HEADQUARTERS COMPOUNDS – 1 STORY HQ
VARIOUS LOCATIONS, AFGHANISTAN
SITE DESIGN
DETAILS

SHEET REFERENCE NUMBER:
C–2

10/22/2007
S:\Engineering & Construction\Engineering\00_RFPs in-progress\ANP\ANP ON 1-Story Design\ANP Dist HQ 1Story Design Changes 2607\Microstation files\civil\AF0607-C102DT.dgn

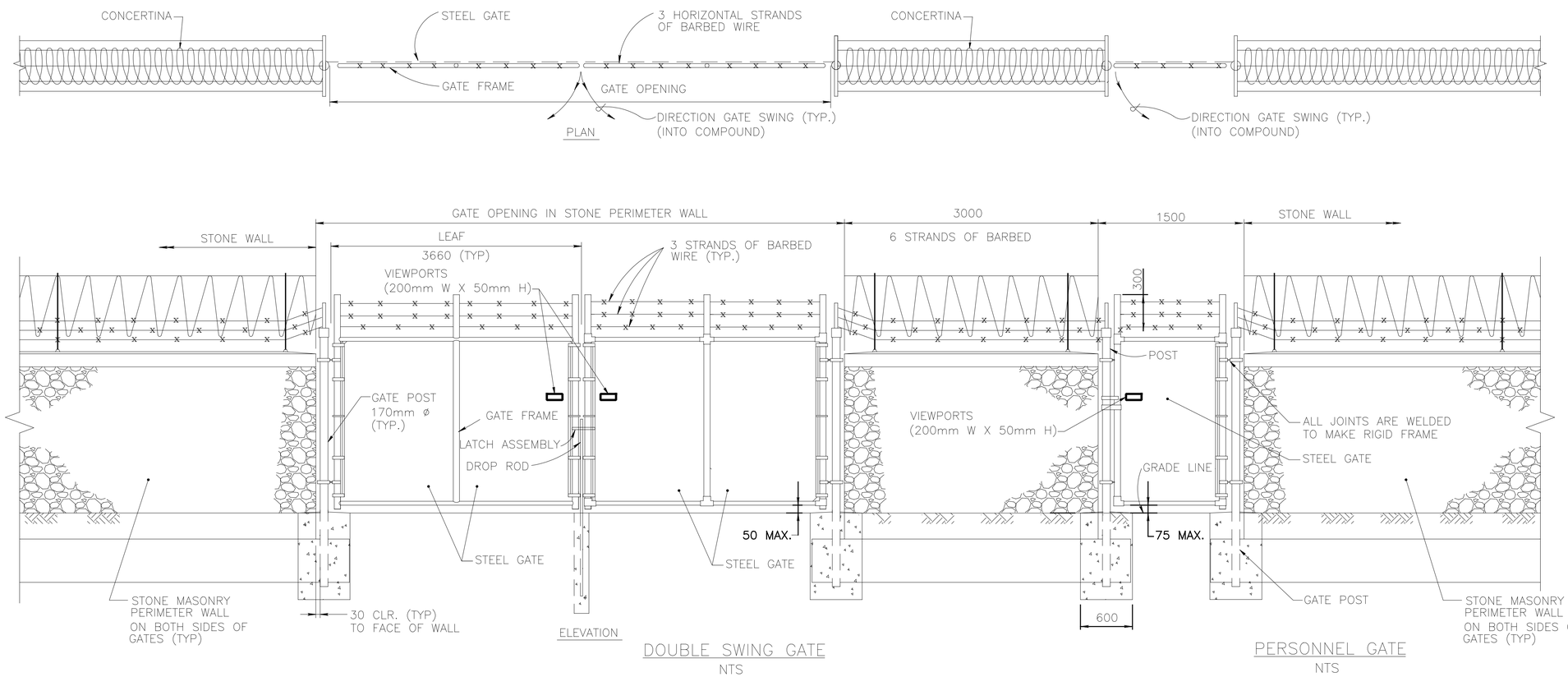

UNLESS OTHERWISE NOTED, LINEAR DIMENSIONS SHOWN ARE IN MILLIMETERS.

SYMBOL	DESCRIPTION	DATE	APR

DESIGNED BY: MW
DATE: 29 OCTOBER 2007
DWN BY: TSR
SUBMITTED BY:
CHK BY: REK
FILE NO.: AF0607-C1030T

US Army Corps of Engineers
Afghanistan Engineer District

AFGHANISTAN NATIONAL POLICE (ANP) DISTRICT HEADQUARTERS COMPOUNDS – 1 STORY HQ
VARIOUS LOCATIONS, AFGHANISTAN
SITE DESIGN
DETAILS

SHEET REFERENCE NUMBER:
C–3

10/22/2007
S:\Engineering & Construction\Engineering\00_RFPs in-progress\ANP\ANP 01_1-Story Design\ANP 03 Dist HQ 1Story Design Changes 26Oct07\Microstation Files\civil\AF0607-C1030T.dgn

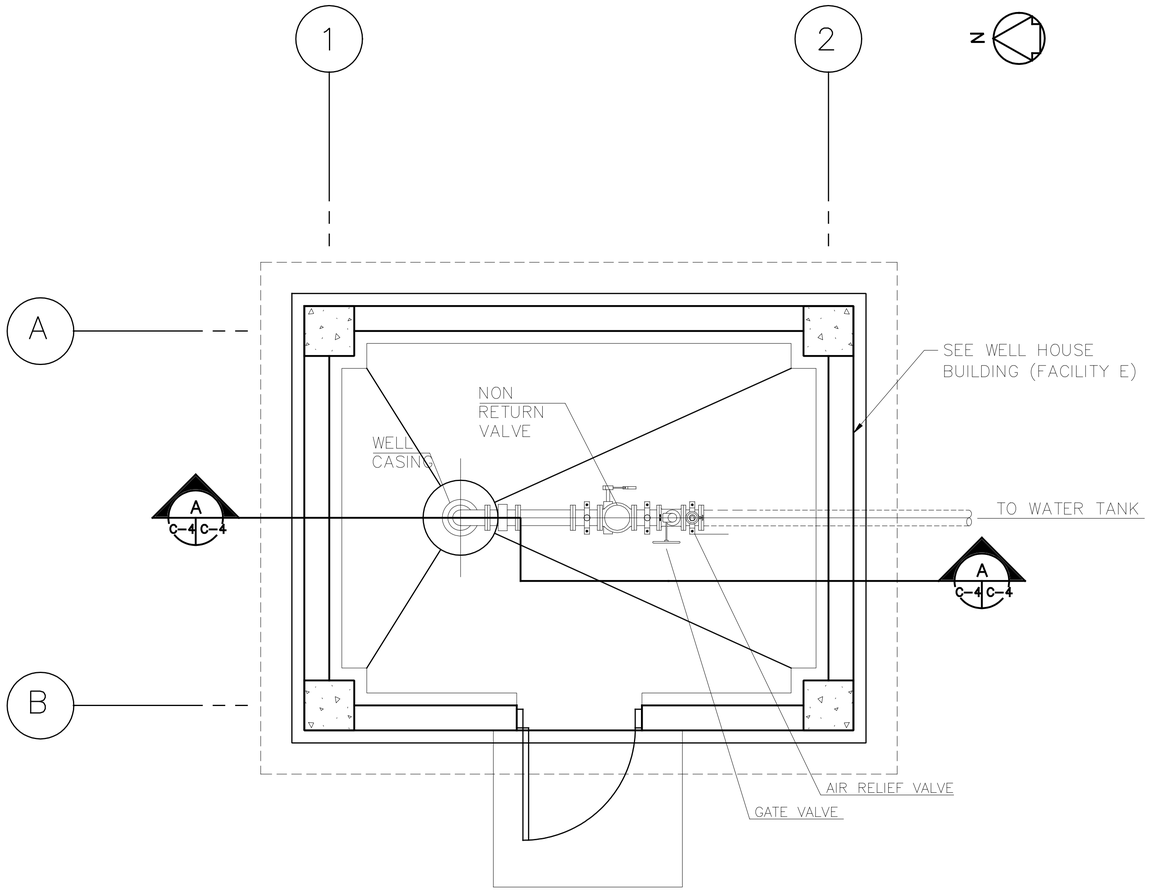

FLOOR PLAN
NOT TO SCALE

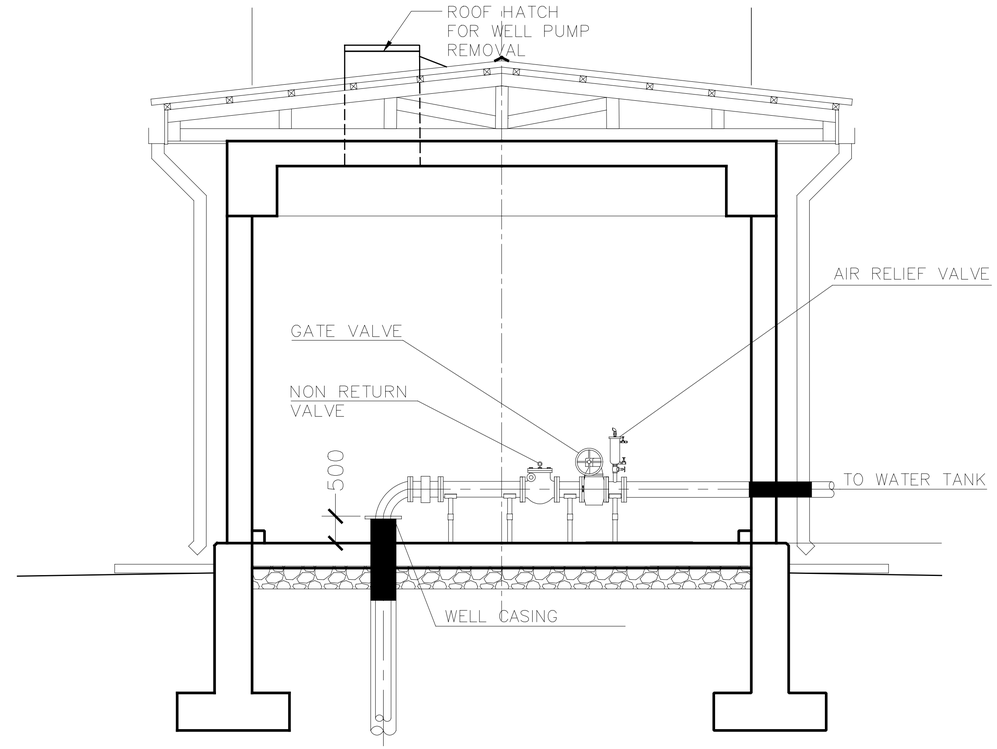

A C-4 C-4 BUILDING SECTION
NOT TO SCALE

UNLESS OTHERWISE NOTED, LINEAR DIMENSIONS SHOWN ARE IN MILLIMETERS.

SYMBOL	DESCRIPTION	DATE	APR

DESIGNED BY: MW
DATE: 29 OCTOBER 2007
DWN BY: TSR
SUBMITTED BY:
CHK BY: REK
FILE NO.: AF0607-C104DT

US Army Corps of Engineers
Afghanistan Engineer District

AFGHANISTAN NATIONAL POLICE (ANP) DISTRICT HEADQUARTERS COMPOUNDS – 1 STORY HQ
VARIOUS LOCATIONS, AFGHANISTAN
SITE DESIGN
WELL HOUSE PLAN AND SECTION

SHEET REFERENCE NUMBER:
C-4

10/27/2007
S:\Engineering & Construction\Engineering\00_RFPs in-progress\ANP\ANP ONE-Story Design\ANP_Dist_HQ_1Story_Design_Changes_26Oct07\Microstation Files\civil\AF0607-C104DT.dgn

NOTE:
1. SEE CIVIL SITE PLAN FOR ORIENTATION OF INLET AND OUTLET CONNECTIONS.

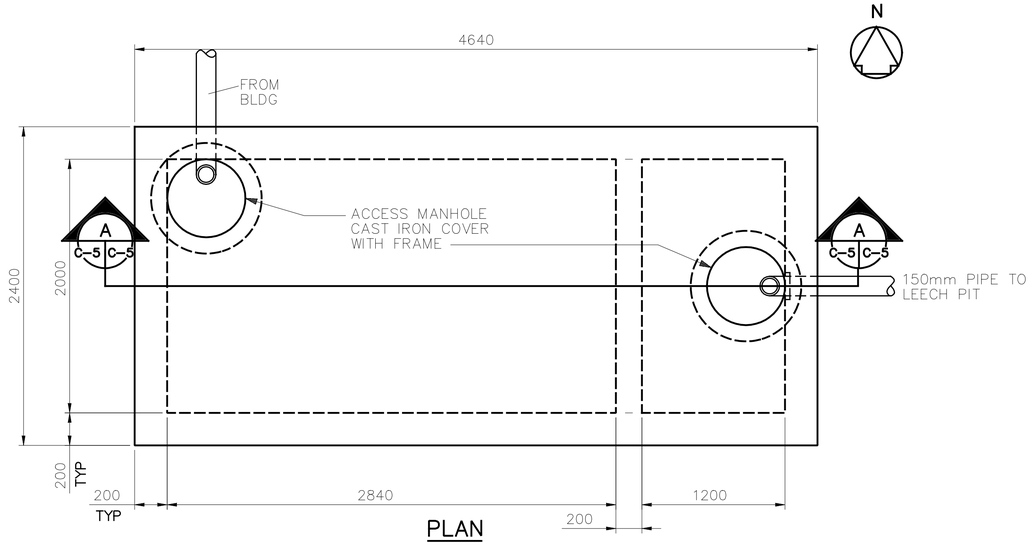

PLAN

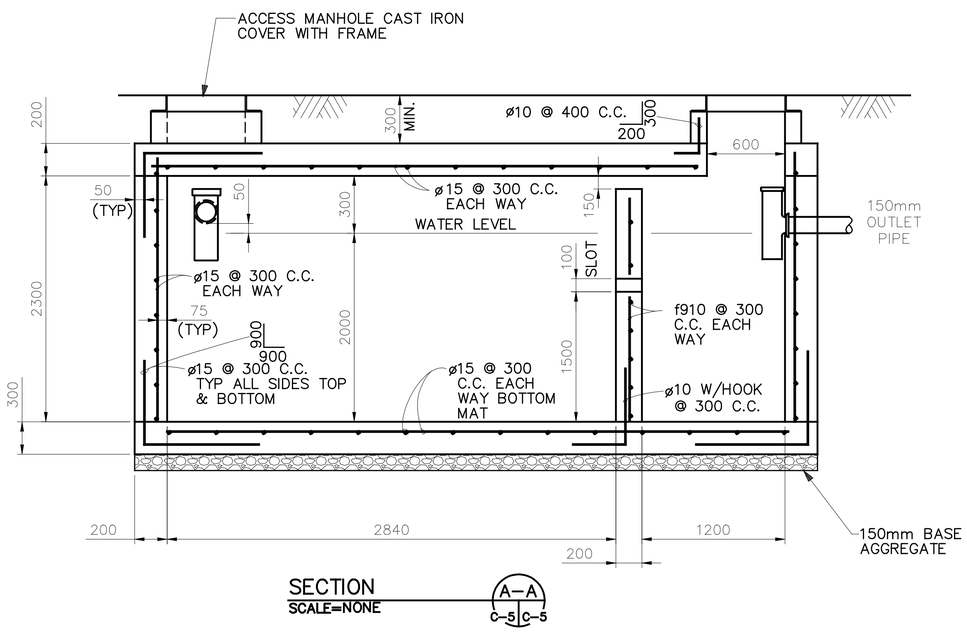

SECTION A–A
SCALE=NONE
C-5 C-5

CONCRETE SEPTIC TANK DETAILS

NOT TO SCALE

UNLESS OTHERWISE NOTED, LINEAR DIMENSIONS SHOWN ARE IN MILLIMETERS.

SYMBOL	DESCRIPTION	DATE	APR

DESIGNED BY: MW
DATE: 29 OCTOBER 2007
DWN BY: TSR
SUBMITTED BY:
CHK BY: REK
FILE NO.: AF0607-C105DT

US Army Corps of Engineers
Afghanistan Engineer District

AFGHANISTAN NATIONAL POLICE (ANP) DISTRICT HEADQUARTERS COMPOUNDS – 1 STORY HQ
VARIOUS LOCATIONS, AFGHANISTAN
SITE DESIGN
SEPTIC TANK DETAILS

SHEET REFERENCE NUMBER:
C–5

10/22/2007
S:\Engineering & Construction\Engineering\00_RFPs in-progress\ANP\ANP ON 1-Story Design\AND Dist HQ 1Story Design Changes 26Oct07\Microstation Files\civil\AF0607-C105DT.dgn

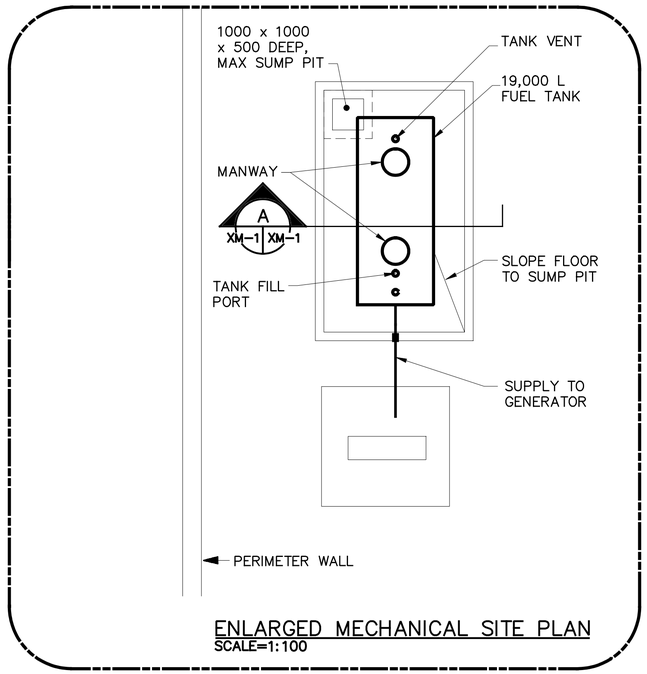

ENLARGED MECHANICAL SITE PLAN
SCALE=1:100

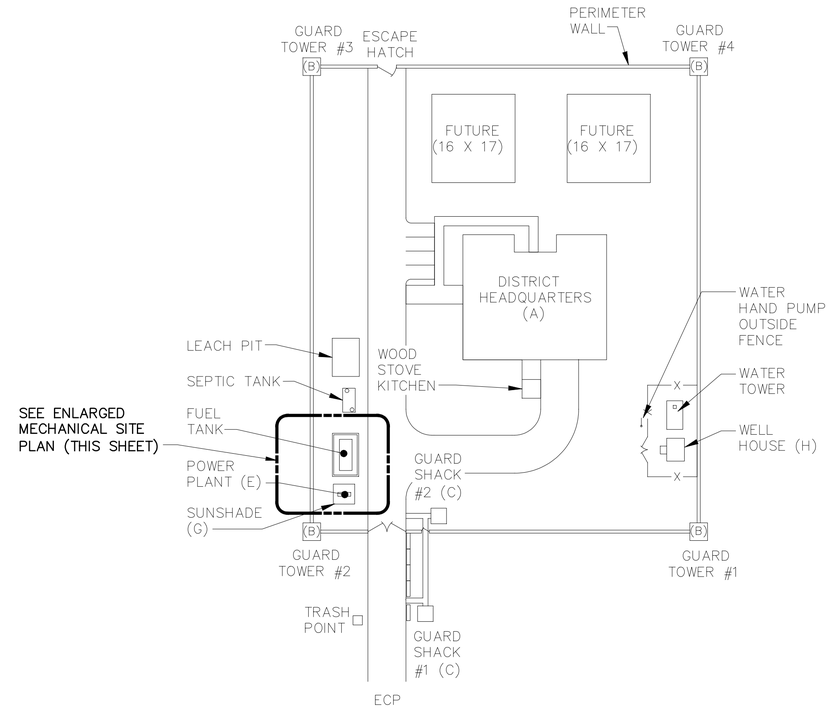

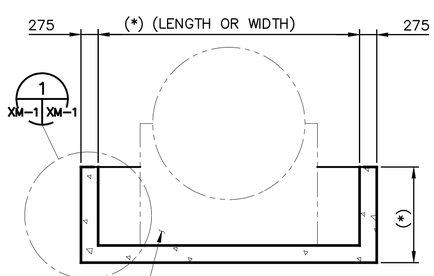

SEE SPEC FOR
SADDLE
REQUIREMENTS

(*) – COORDINATE LENGTH, WIDTH, AND HEIGHT OF CONTAINMENT DIKE WITH TANK REQUIREMENTS. HEIGHT OF WALL IS TO BE DETERMINED BASED ON SPECIFICATION 01015. FOR HEIGHTS GREATER THAN 1000mm, REINFORCEMENT SHOWN REQUIRES VERIFICATION BY ENGINEER.

SECTION A–A
SCALE=1:50
XM-1 XM-1

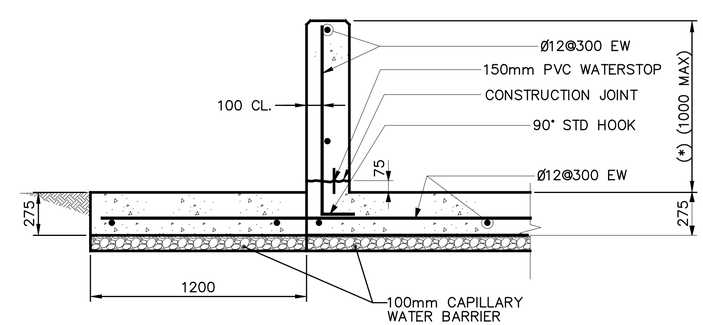

CONTAINMENT
WALL DETAIL
SCALE= NO SCALE
1
XM-1 XM-1

MECHANICAL SITE PLAN
SCALE= 1:600

1:50 1:100 1:600

SYMBOL	DESCRIPTION	DATE	APR

DESIGNED BY: JLK
DATE: 29 OCTOBER 2007
DWN BY: JLK
SUBMITTED BY:
CHK BY: JLK
FILE NO.: AF0607--MS01PN

US Army Corps of Engineers
Afghanistan Engineer District

AFGHANISTAN NATIONAL POLICE (ANP) DISTRICT HEADQUARTERS COMPOUNDS – 1 STORY HQ
VARIOUS LOCATIONS, AFGHANISTAN
SITE DESIGN
MECHANICAL SITE PLAN

SHEET REFERENCE NUMBER:
XM–1

10/22/2007
S:\Engineering & Construction\Engineering\00_RFPs in Progress\ANP\ANP 01-Story Design\ANP Dist HQ 1Story Design Changes 26Oct07\Microstation Files\mech\AF0607-MS01PN.dgn

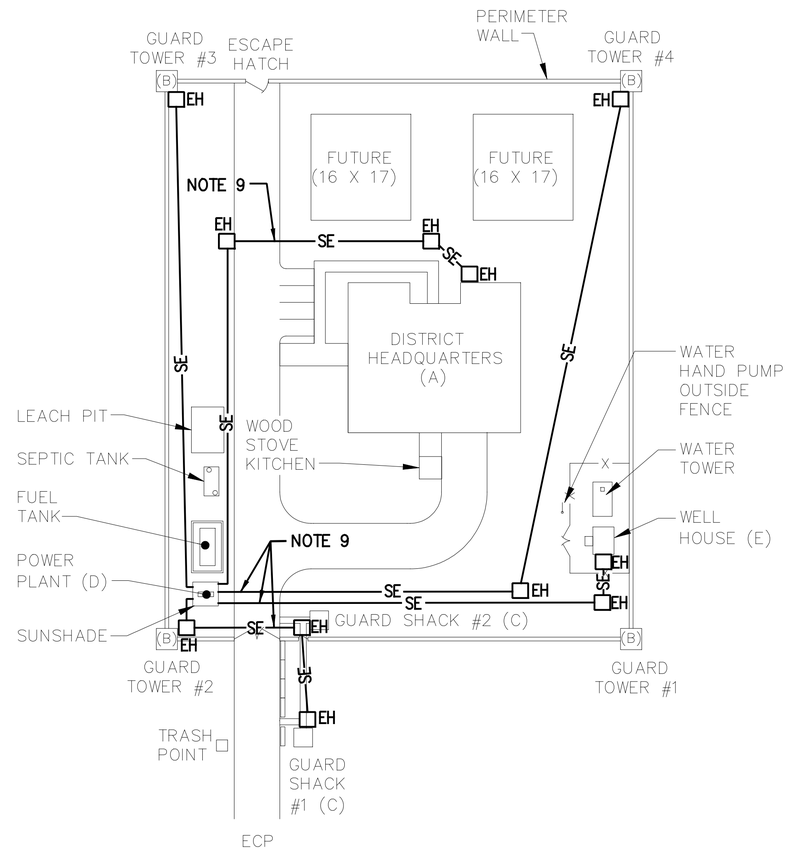

ELECTRICAL SITE PLAN

SCALE= 1:500

NOTES:

1. FOR LEGENDS AND ABBREVIATIONS SEE PLATE SE–1.
2. FOR SECONDARY DISTRIBUTION DIRECT BURIED (DB) DUCT DETAILS AND GENERATOR POWER PLANT DETAILS SEE PLATES SE–4 AND SE–5.
3. FOR ELECTRICAL HAND HOLE (EH) SEE PLATE SE–6.
4. FOR POWER PLANT ONE LINE DIAGRAM SEE PLATE D/E–1, POWER PLANT.
5. ALL SECONDARY DISTRIBUTION CABLES SHALL BE RACKED ON THE SIDES OF EH. SEE DETAIL ON PLATE SE–4.
6. ALL DIRECT BURIED PVC CONDUIT 90 DEGREE BENDS SHALL HAVE A RADIUS OF NOT LESS THAN 92mm, OR NOT LESS THAN THE CABLE MANUFACTURER'S RECOMMENDED CABLE BENDING RADIUS, WHICH EVER BEND RADIUS IS LARGER.
7. ALL CABLE SPLICES SHALL BE MADE IN AN EH AND IN ACCORDANCE WITH THE CABLE MANUFACTURER'S RECOMMENDATIONS.
8. COORDINATE ROUTING OF SECONDARY SERVICES AS NECESSARY TO AVOID FACILITIES AND STRUCTURES.
9. PROVIDE CONCRETE ENCASED DUCT BANK UNDER TRAFFIC AREAS.

10 0 10 20 30 40 50
1:500

UNLESS OTHERWISE NOTED, LINEAR DIMENSIONS SHOWN ARE IN MILLIMETERS.

SYMBOL	DESCRIPTION	DATE	APR

DESIGNED BY: JJK
DWN BY: JJK
CHK BY: JJK
DATE: 29 OCTOBER 2007
SUBMITTED BY:
FILE NO.: AF0607--ES01PN

US Army Corps of Engineers
Afghanistan Engineer District

AFGHANISTAN NATIONAL POLICE (ANP) DISTRICT HEADQUARTERS COMPOUNDS – 1 STORY HQ
VARIOUS LOCATIONS, AFGHANISTAN
SITE DESIGN
ELECTRICAL SITE PLAN

SHEET REFERENCE NUMBER:
XE–1

10/27/2007
S:\Engineering & Construction\Engineering\00_RFPs in-progress\ANP\ANP ON 1-Story Design\ANP Dist HQ 1Story Design Changes 26Oct07\Microstation Files\elec\AF0607-ES01PN.dgn

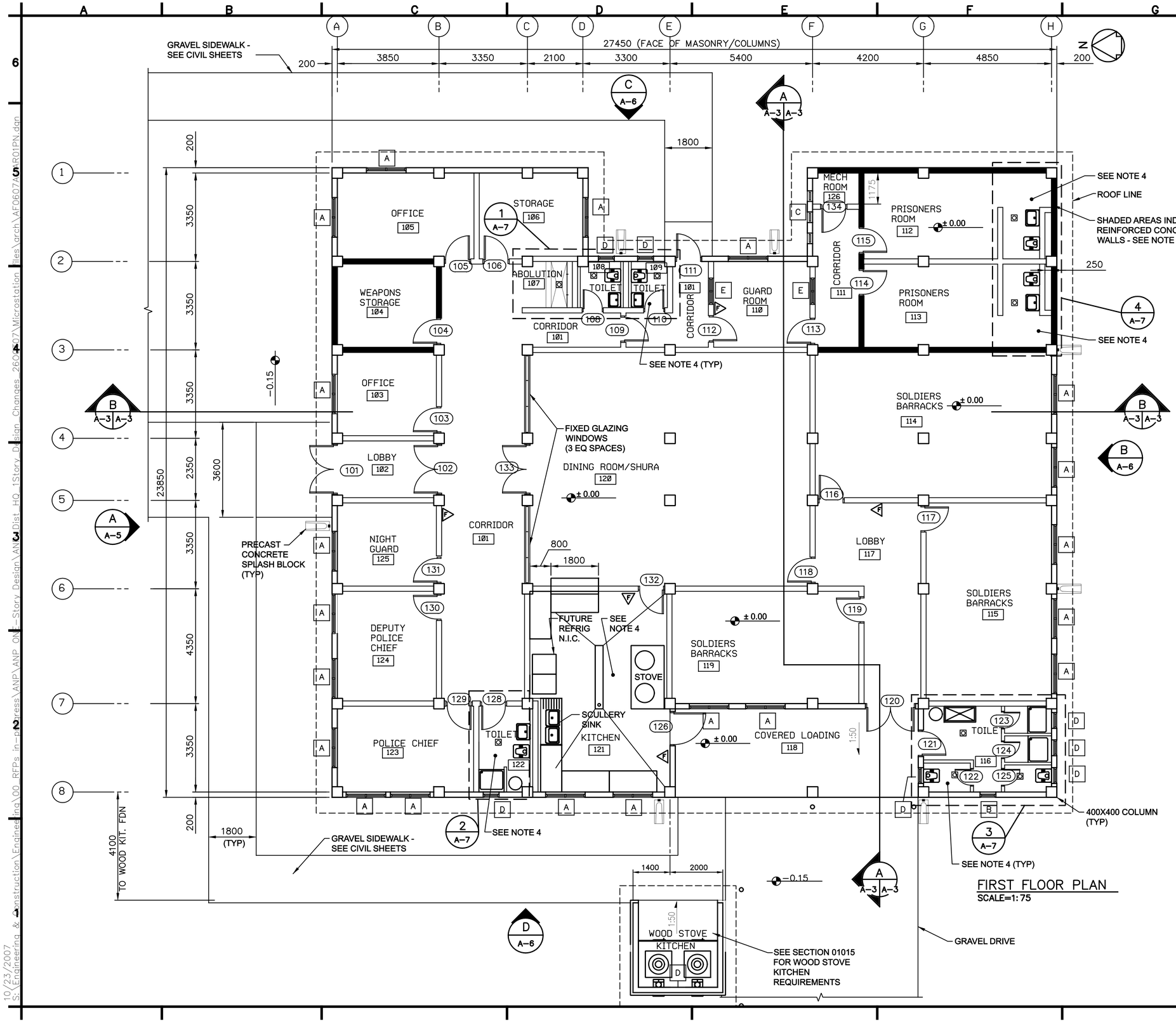

GENERAL NOTES:

1. PROVIDE PORTABLE FIRE EXTINGUISHERS, ABC DRY CHEMICAL 4A:60B:C

2. ALL INTERIOR WALLS SHALL BE 200 mm THICK BRICK MASONRY AND SHALL EXTEND TO THE BOTTOM OF STRUCTURE ABOVE AND CENTER ON COLUMNS UNLESS NOTED OTHERWISE.

3. TOILET AND SHOWER PARTITIONS SHALL BE 2200mm HIGH.

4. SLOPE FLOORS IN KITCHENS AND TOILET/SHOWER AREAS 1:50 MINIMUM TO TRENCH DRAINS AND FLOOR DRAINS WHERE INDICATED. SLOPE TRENCH DRAINS 1:50 TO DRAIN AT ONE END. SEE ENLARGED ARCHITECTURAL DRAWINGS, PLUMBING DRAWINGS, AND STRUCTURAL DRAWINGS.

5. INTERIOR AND EXTERIOR WALLS AROUND PRISONERS ROOMS AND WEAPONS STORAGE, AS INDICATED BY SHADING, SHALL BE 200mm THICK REINFORCED CONCRETE – SEE STRUCTURAL FOR DETAILS.

UNLESS OTHERWISE NOTED, LINEAR DIMENSIONS SHOWN ARE IN MILLIMETERS.

SYMBOL	DESCRIPTION	DATE	APR

DESIGNED BY: JLK
DATE: 29 OCTOBER 2007
DWN BY: JLK
SUBMITTED BY:
CHK BY: JLK
FILE NO.: AF0607A-AR01PN

US Army Corps of Engineers
Afghanistan Engineer District

AFGHANISTAN NATIONAL POLICE (ANP) DISTRICT HEADQUARTERS COMPOUNDS – 1 STORY HQ
VARIOUS LOCATIONS, AFGHANISTAN
1 STORY BUILDING
FIRST FLOOR PLAN

SHEET REFERENCE NUMBER:
A
A–1

10/23/2007
S:\Engineering & Construction\Engineering\00_RFPs in-progress\ANP\ANP 01_1-Story Design\ANP Dist HQ 1Story Design Changes 26Oct07\Microstation Files\Arch\AF0607A-AR01PN.dgn

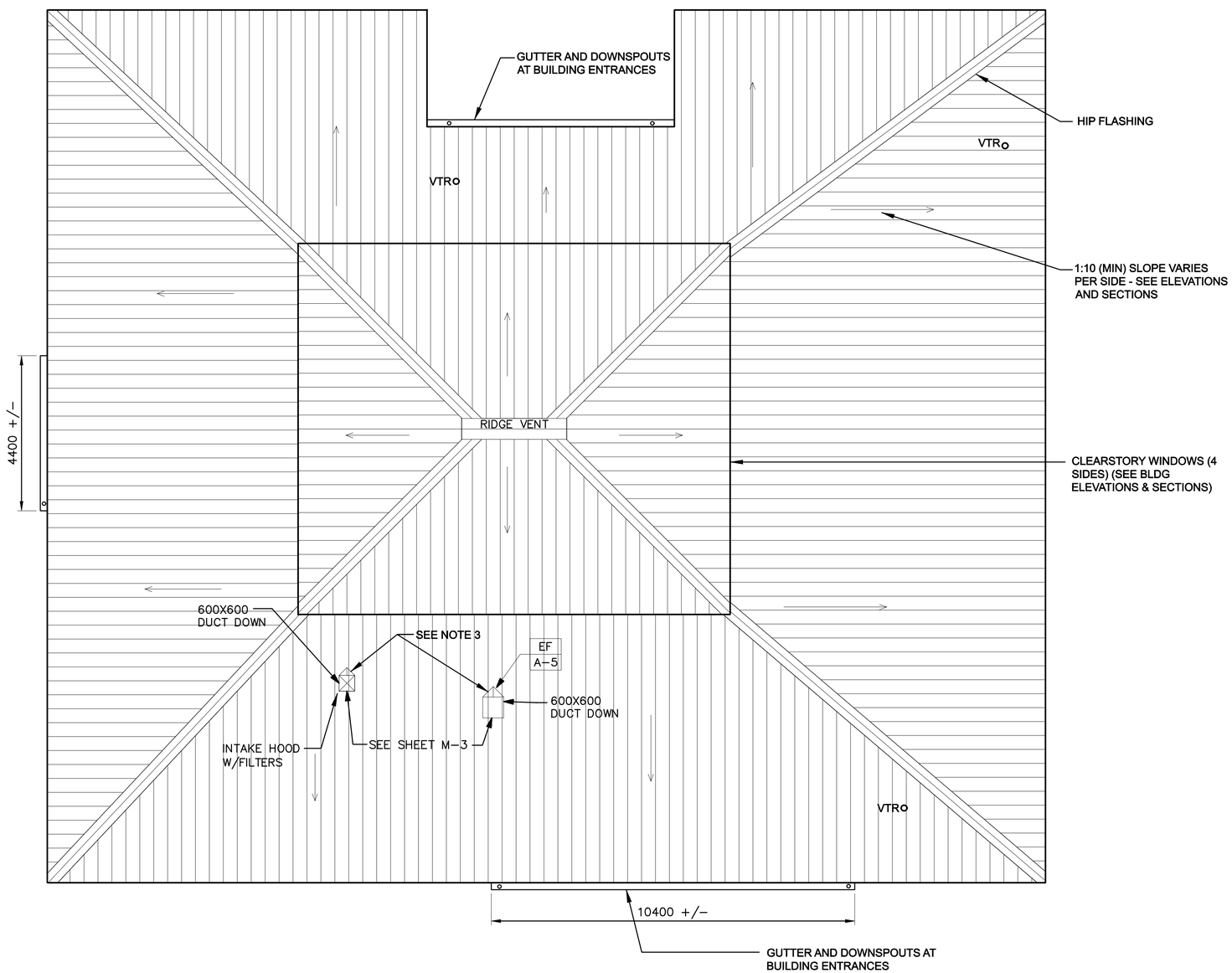

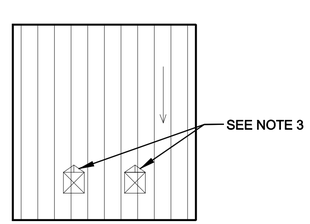

ROOF PLAN

SCALE= 1:75

NOTE:

1. TYPICAL ROOF SLOPE IS 1 IN 10.

2. ALL ROOF PENETRATIONS SHALL BE PROPERLY FLASHED AND SEALED WEATHER TIGHT.

3. PROVIDE WATER TIGHT SHEET METAL CRICKETS, FLASHING AND SEALANT PER ROOFING MANUFACTURERS RECOMMENDATIONS AT EACH PENETRATION. ALIGN STANDING SEAMS WITH FLASHING AT CRICKETS SUCH THAT WATER IS DIVERTED AROUND PENETRATIONS.

3 1.50 0 3 4.5
1:75

UNLESS OTHERWISE NOTED, LINEAR DIMENSIONS SHOWN ARE IN MILLIMETERS.

SYMBOL	DESCRIPTION	DATE	APP

DESIGNED BY: JLK
DWN BY: JLK
CHK BY: JLK
DATE: 29 OCTOBER 2007
SUBMITTED BY:
FILE NO.: AF0607A-AR02PN

US Army Corps of Engineers
Afghanistan Engineer District

AFGHANISTAN NATIONAL POLICE (ANP) DISTRICT HEADQUARTERS COMPOUNDS – 1 STORY HQ
VARIOUS LOCATIONS, AFGHANISTAN
1 STORY BUILDING
ROOF PLAN

SHEET REFERENCE NUMBER:
A
A-2

10/27/2007
S:\Engineering & Construction\Engineering\00_RFPs in-progress\ANP\ANP 01-Story Design\ANP Dist HQ 1Story Design Changes 26Oct07\Microstation files\arch\AF0607A-AR02PN.dgn

GENERAL NOTES:
1. UNLESS NOTED OTHERWISE, ELEVATIONS ARE SHOWN IN METERS ABOVE OR BELOW FINISHED FLOOR.

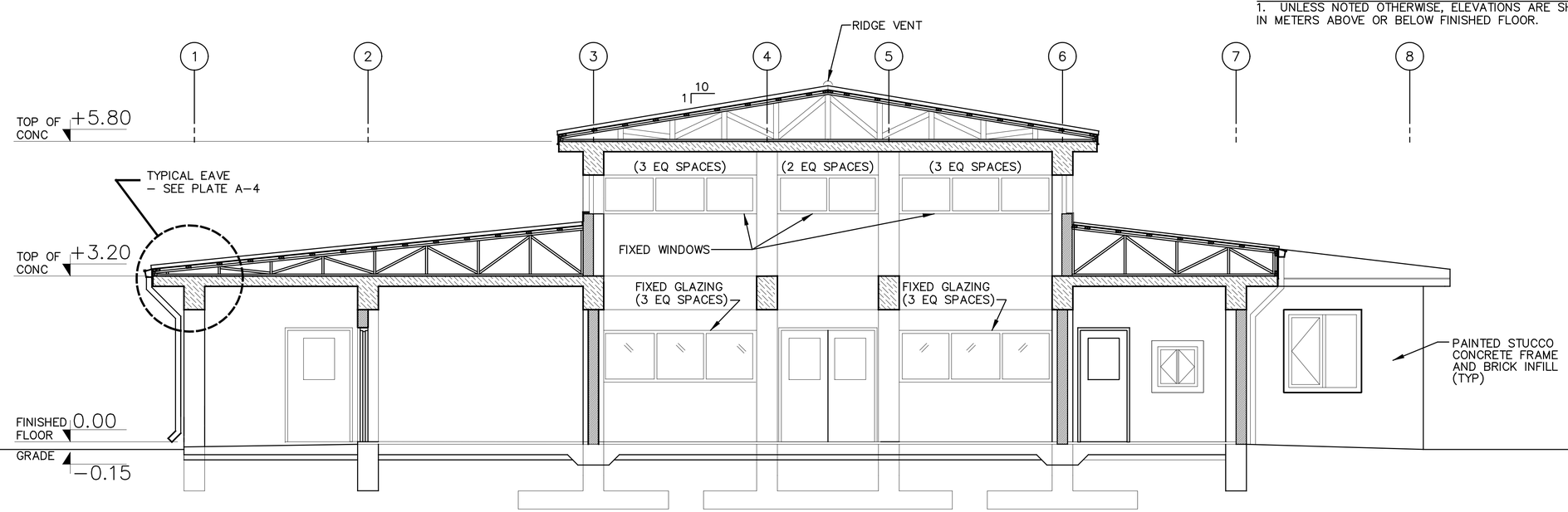

BUILDING SECTION A–A (A–1 / A–3)
SCALE=1:50

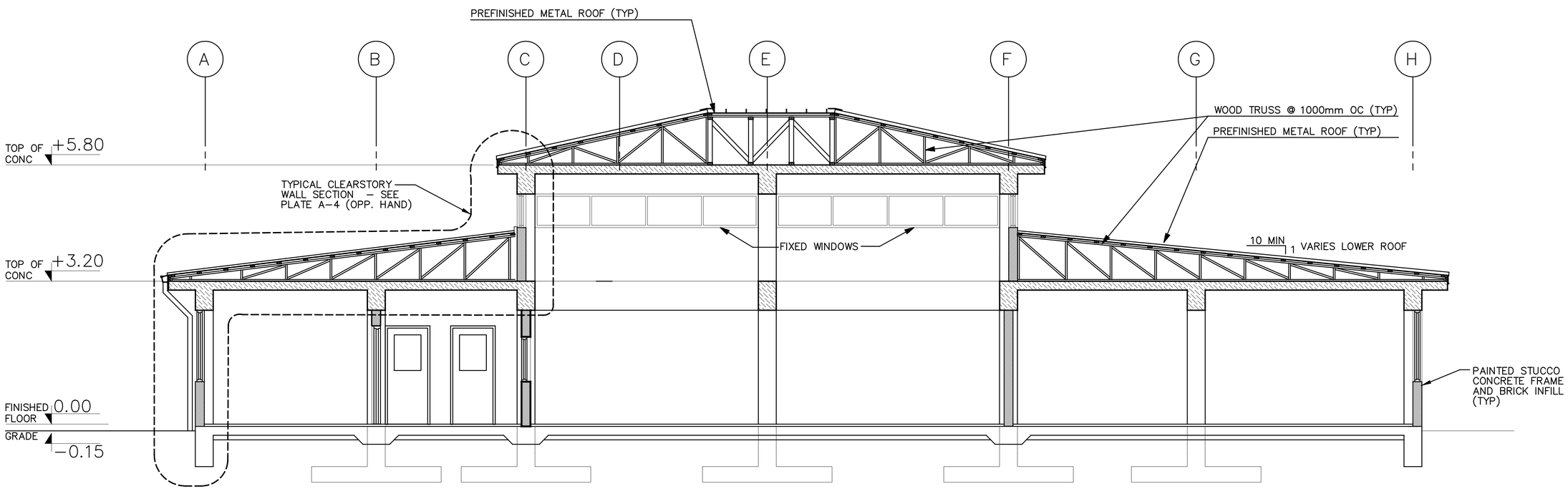

BUILDING SECTION B–B (A–1 / A–3)
SCALE=1:50

1:50

UNLESS OTHERWISE NOTED, LINEAR DIMENSIONS SHOWN ARE IN MILLIMETERS.

SYMBOL	DESCRIPTION	DATE	APR

DESIGNED BY: JLK
DATE: 29 OCTOBER 2007
DWN BY: JLK
SUBMITTED BY:
CHK BY: JLK
FILE NO.: AF0807A–AR03SE

US Army Corps of Engineers
Afghanistan Engineer District

AFGHANISTAN NATIONAL POLICE (ANP) DISTRICT HEADQUARTERS COMPOUNDS – 1 STORY HQ
VARIOUS LOCATIONS, AFGHANISTAN
1 STORY BUILDING
BUILDING SECTIONS

SHEET REFERENCE NUMBER:
A
A–3

10/22/2007
S:\Engineering & Construction\Engineering\00_RFPs in-Progress\ANP\ANP 01 1-Story Design\ANP Dist HQ 1Story Design Changes 26Oct07\Microstation Files\Arch\AF0607A-AR03SE.dgn

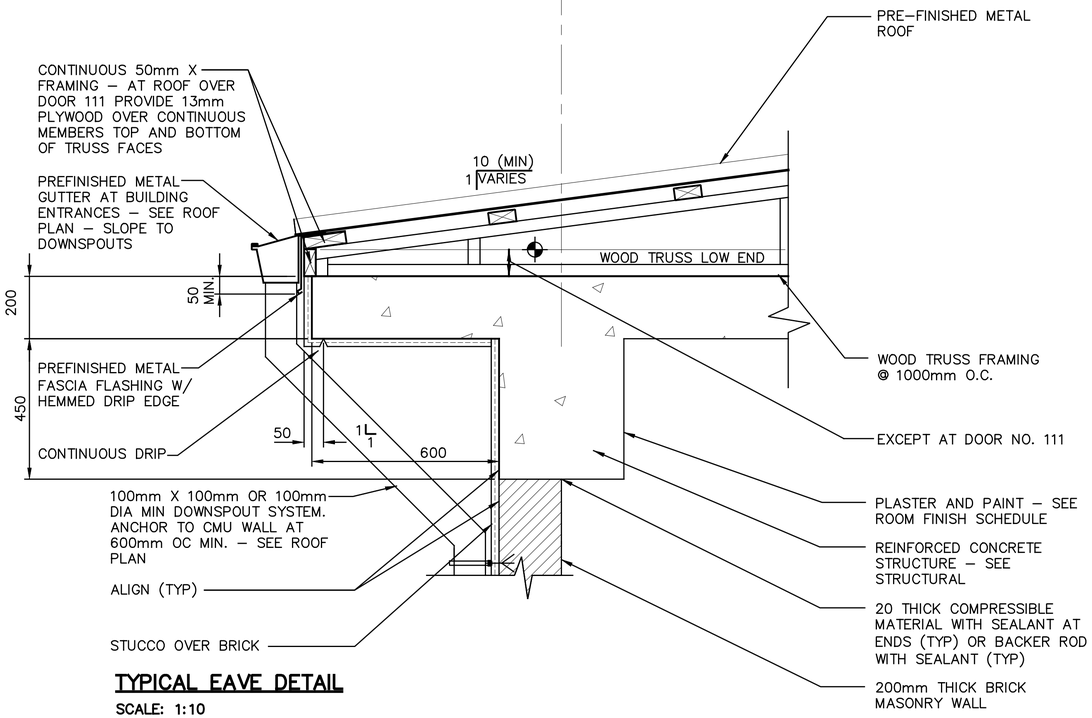

TYPICAL EAVE DETAIL

SCALE: 1:10

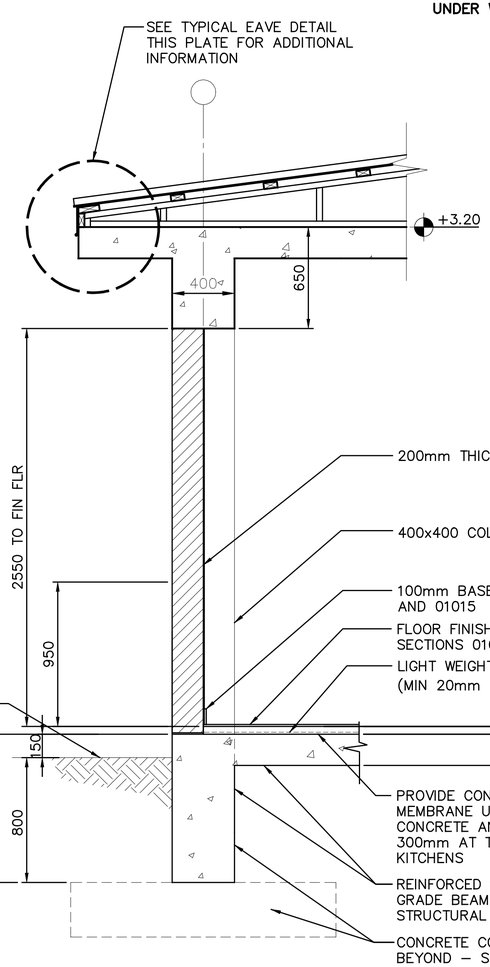

TYPICAL WALL SECTION

SCALE: 1:20

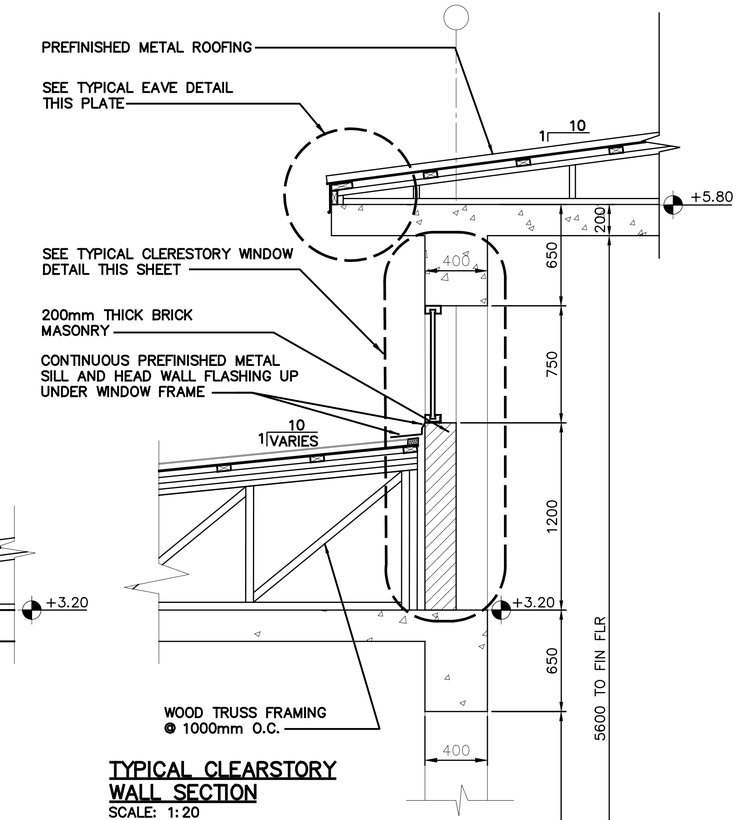

TYPICAL CLEARSTORY WALL SECTION

SCALE: 1:20

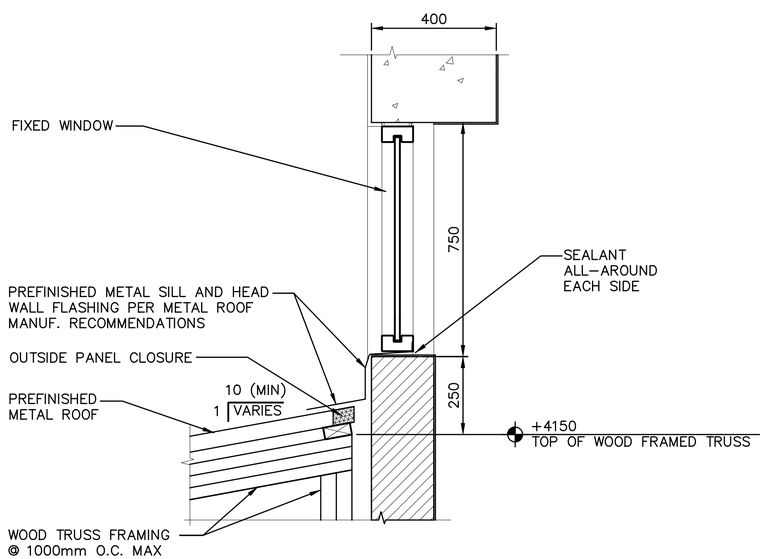

TYPICAL CLERESTORY WINDOW DETAIL

SCALE: 1:10

0 .50 1.00
1:10

1 .50 0 1
1:20

UNLESS OTHERWISE NOTED, LINEAR DIMENSIONS SHOWN ARE IN MILLIMETERS.

SYMBOL	DESCRIPTION	DATE	APR

DESIGNED BY: JLK
DATE: 29 OCTOBER 2007
DWN BY: JLK
SUBMITTED BY:
CHK BY: JLK
FILE NO.: AF0607A–AR04SE

US Army Corps of Engineers
Afghanistan Engineer District

AFGHANISTAN NATIONAL POLICE (ANP) DISTRICT HEADQUARTERS COMPOUNDS – 1 STORY HQ
VARIOUS LOCATIONS, AFGHANISTAN
1 STORY BUILDING
WALL SECTION

SHEET REFERENCE NUMBER:
A
A–4

10/22/2007
S:\Engineering & Construction\Engineering\00_RFPs in Progress\ANP\ANP ONE-Story Design\ANP Dist HQ 1Story Design Changes 26Oct07\Microstation Files\Arch\AF0607A-AR04SE.dgn

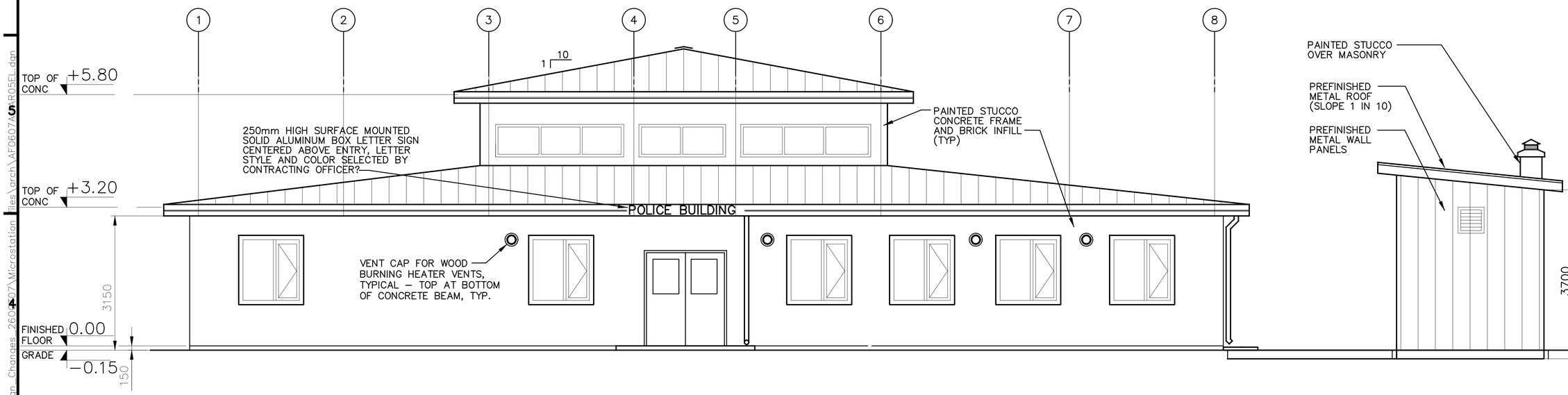

ELEVATION A
SCALE=1:50
A-1 A-5

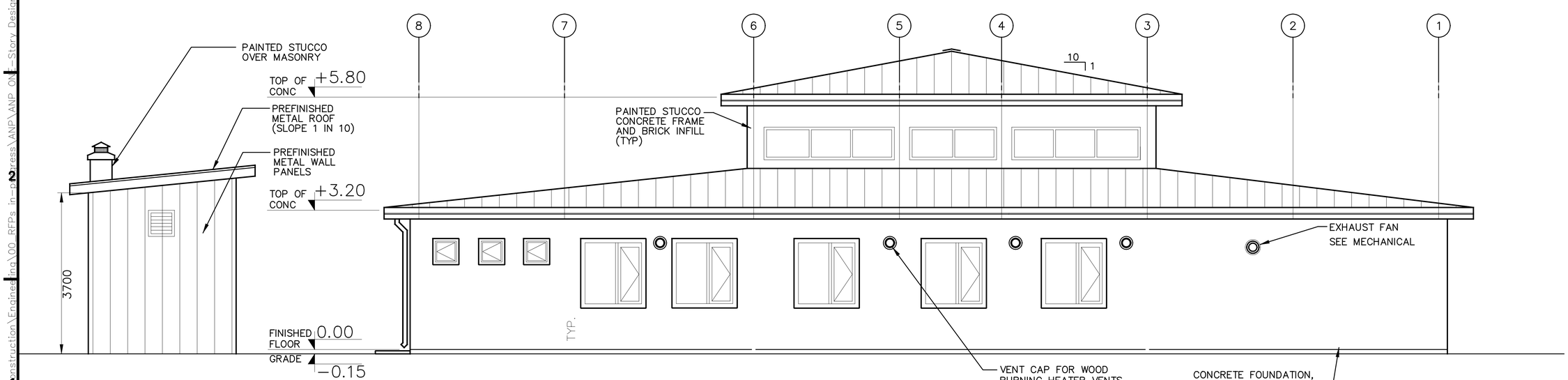

ELEVATION B
SCALE=1:50
A-1 A-5

NOTE: SEE STANDARD DETAILS FOR ADDITIONAL NOTES.

1:50

UNLESS OTHERWISE NOTED, LINEAR DIMENSIONS SHOWN ARE IN MILLIMETERS.

SYMBOL	DESCRIPTION	DATE	APR

DESIGNED BY: JLK
DWN BY: JLK
CHK BY: JLK
DATE: 29 OCTOBER 2007
SUBMITTED BY:
FILE NO.: AF0607A-AR05EL

US Army Corps of Engineers
Afghanistan Engineer District

AFGHANISTAN NATIONAL POLICE (ANP) DISTRICT HEADQUARTERS COMPOUNDS – 1 STORY HQ
VARIOUS LOCATIONS, AFGHANISTAN
1 STORY BUILDING
BUILDING ELEVATIONS

SHEET REFERENCE NUMBER:
A
A–5

10/22/2007
S:\Engineering & Construction\Engineering\00_RFPs in-progress\ANP\ANP 01-Story Design\AND Dist HQ 1Story Design Changes 26Oct07\Microstation files\arch\AF0607A-AR05EL.dgn

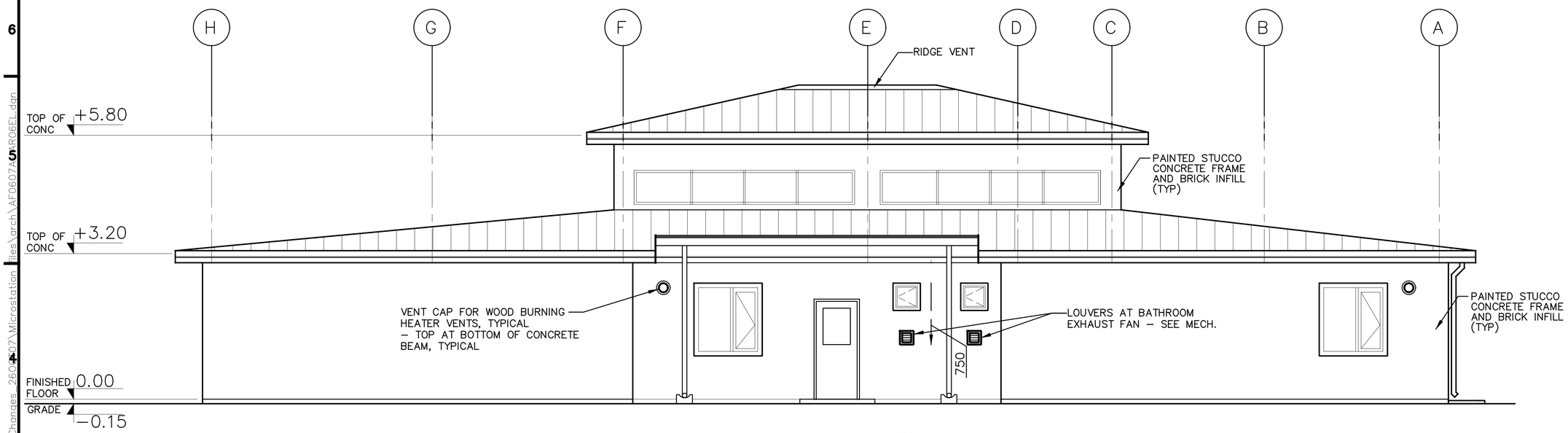

ELEVATION
SCALE=1:50
C A–1 A–6

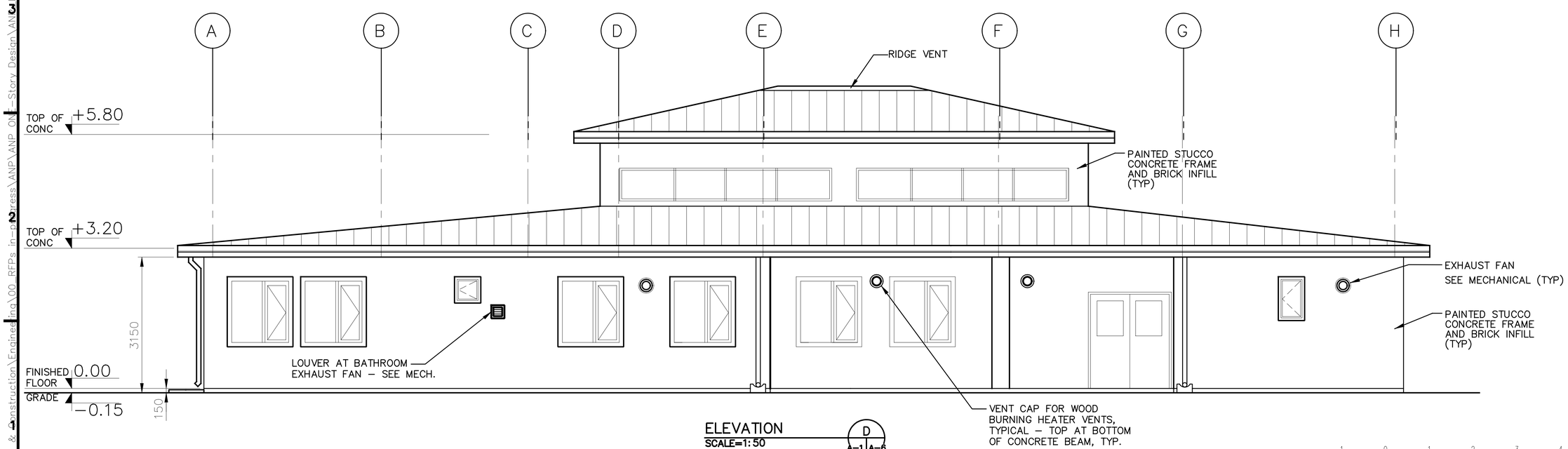

ELEVATION
SCALE=1:50
D A–1 A–6

1 0 1 2 3 4
1:50

UNLESS OTHERWISE NOTED, LINEAR DIMENSIONS SHOWN ARE IN MILLIMETERS.

SYMBOL	DESCRIPTION	DATE	APR

DESIGNED BY: JLK
DATE: 29 OCTOBER 2007
DWN BY: JLK
SUBMITTED BY:
CHK BY: JLK
FILE NO.: AF0607A–AR06EL

US Army Corps of Engineers
Afghanistan Engineer District

AFGHANISTAN NATIONAL POLICE (ANP) DISTRICT HEADQUARTERS COMPOUNDS – 1 STORY HQ
VARIOUS LOCATIONS, AFGHANISTAN
1 STORY BUILDING
BUILDING ELEVATIONS

SHEET REFERENCE NUMBER:
A
A–6

10/23/2007
S:\Engineering & Construction\Engineering\00_RFPs in-progress\ANP\ANP ONE-Story Design\ANP Dist HQ 1Story Design Changes 26Oct07\Microstation Files\arch\AF0607A-AR06EL.dgn

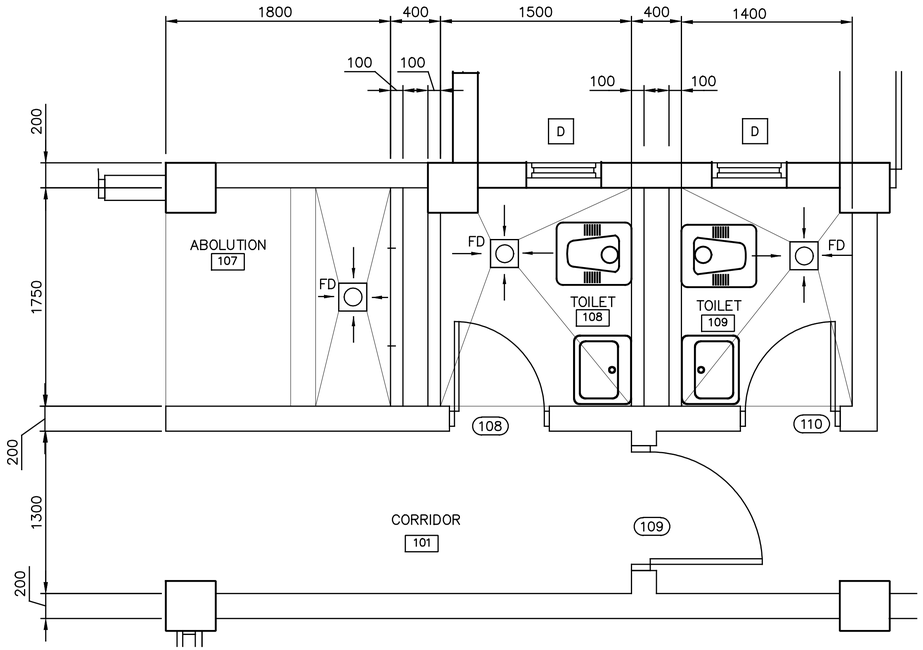

DETAIL 1
SCALE=1:25
A-1 | A-7

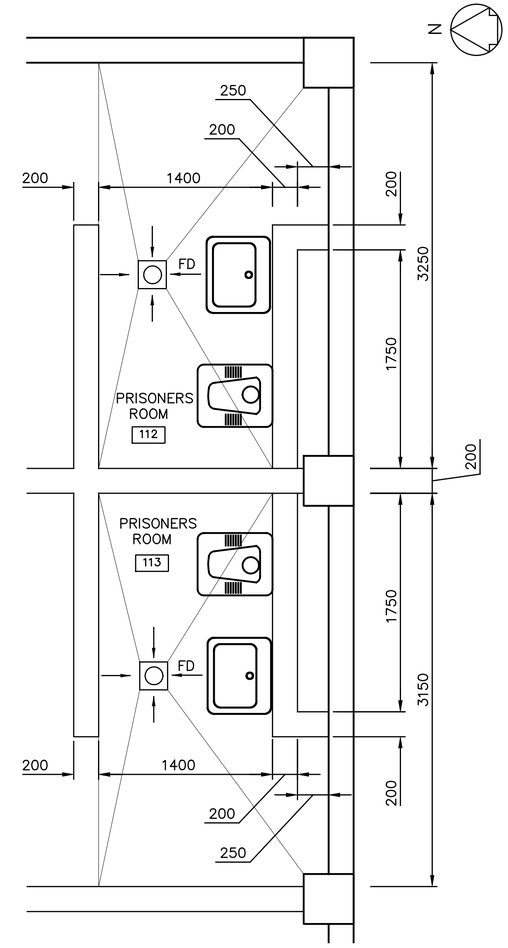

DETAIL 4
SCALE=1:25
A-1 | A-7

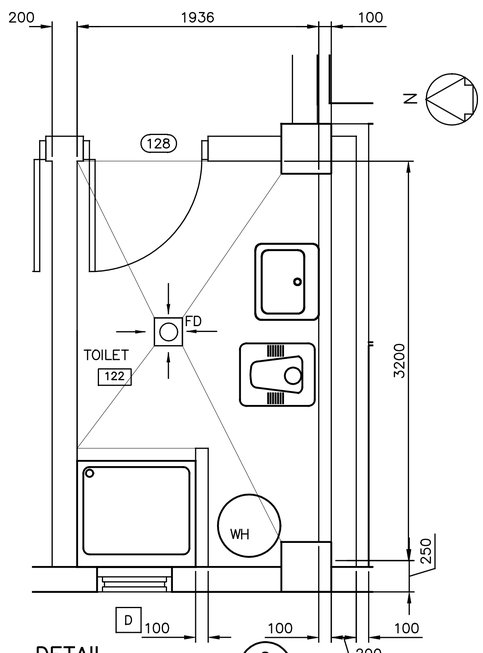

DETAIL 2
SCALE=1:25
A-1 | A-7

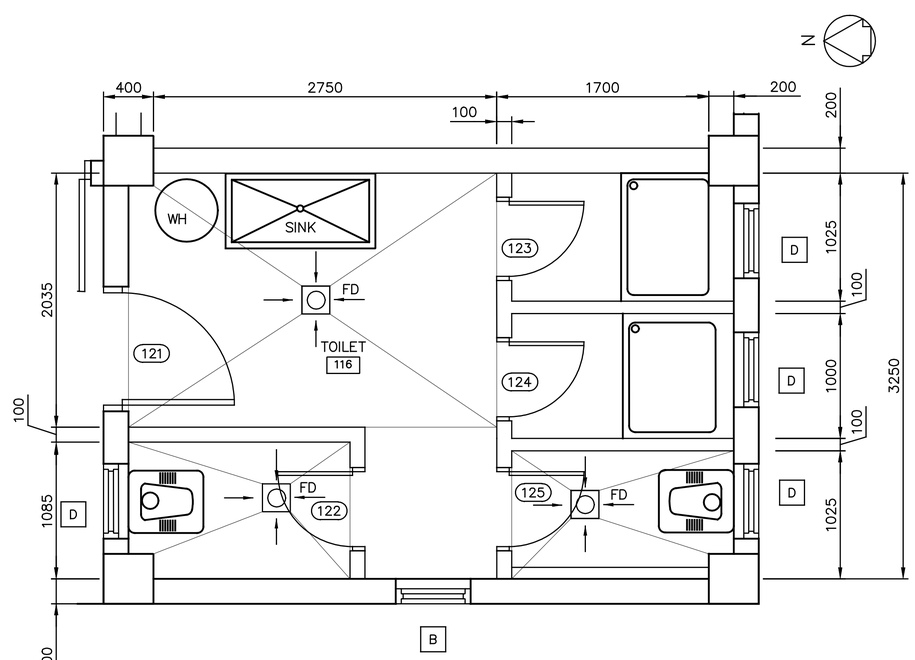

DETAIL 3
SCALE= 1:25
A-1 | A-7

NOTE: PARTITION WALLS BETWEEN TOILET STALLS TO BE 2200mm HIGH.

NOTE:

1. ALL WATER CLOSETS SHALL FACE NORTH OR SOUTH DIRECTION.

1 .50 0 1 1.5
1:25

UNLESS OTHERWISE NOTED, LINEAR DIMENSIONS SHOWN ARE IN MILLIMETERS.

SYMBOL	DESCRIPTION	DATE	APR

DESIGNED BY: JLK
DATE: 29 OCTOBER 2007
DWN BY: JLK
SUBMITTED BY:
CHK BY: JLK
FILE NO.: AF0607A-AR07LS

US Army Corps of Engineers
Afghanistan Engineer District

AFGHANISTAN NATIONAL POLICE (ANP) DISTRICT HEADQUARTERS COMPOUNDS – 1 STORY HQ
VARIOUS LOCATIONS, AFGHANISTAN
1 STORY BUILDING
ENLARGED TOILET PLANS

SHEET REFERENCE NUMBER:
A
A-7

10/23/2007
S:\Engineering & Construction\Engineering\00_RFPs in-progress\ANP\ANP_ONE-Story_Design\ANP\Dist_HQ_1Story_Design_Changes_2607\Microstation Files\Arch\AF0607A-AR07LS.dgn

DOOR SCHEDULE

DOOR							FRAME	HDW SET	REMARKS
NO.	LOCATION	TYPE	MAT'L	WIDTH	HEIGHT	THICK	MAT"L		
101	LOBBY	G (PR)	WOOD	1800	2100	45	WOOD	2	4, 7
102	CORRIDOR	G (PR)	WOOD	1800			WOOD	8	4, 7
103	OFFICE	F	WOOD	900			WOOD	4	
104	WEAPONS STORAGE	F	STEEL	900			STEEL	11	5
105	OFFICE	F	WOOD	900			WOOD	4	
106	STORAGE	F	WOOD	900			WOOD	6	
107	NOT USED								
108	TOILET	L	WOOD	700			WOOD	5	2
109	CORRIDOR	N	WOOD	900			WOOD	4	7
110	TOILET	L	WOOD	700			WOOD	5	2
111	CORRIDOR	G	WOOD	900			WOOD	1	7
112	TO GUARD RM.	N	WOOD	900			WOOD	4	7
113	CORRIDOR	N	WOOD	900			WOOD	4	7
114	Prisoners Rm	C	STEEL	900			NOTE 1	11	CELL DOOR
115	Prisoners Rm	C	STEEL	900			NOTE 1	11	CELL DOOR
116	SOLDIERS BARRACKS	F	WOOD	900			WOOD	7	6
117	SOLDIERS BARRACKS	F	WOOD	900			WOOD	7	6
118	DINING ROOM	F	WOOD	900			WOOD	7	4, 6
119	SOLDIERS BARRACKS	F	WOOD	900			WOOD	7	6
120	LOBBY	G (PR)	WOOD	1800			WOOD	2	4, 7
121	TOILET	L	WOOD	900			WOOD	10	2
122	TOILET STALL	L	WOOD	600			WOOD	3	2
123	TOILET STALL	L	WOOD	600			WOOD	3	2
124	TOILET STALL	L	WOOD	600			WOOD	3	2
125	TOILET STALL	L	WOOD	600			WOOD	3	2
126	KITCHEN	F	WOOD	1200			WOOD	1	4
127	NOT USED								
128	TOILET	L	WOOD	900			WOOD	5	2
129	POLICE CHIEF	F	WOOD	900			WOOD	4	
130	DEPUTY POLICE CHIEF	F	WOOD	900			WOOD	4	
131	NIGHT GUARD	F	WOOD	900			WOOD	4	
132	KITCHEN	N	WOOD	900			WOOD	9	7
133	DINING ROOM	G (PR)	WOOD	1800			WOOD	2	4, 6
134	MECHANICAL ROOM	F	WOOD	900			WOOD	6	

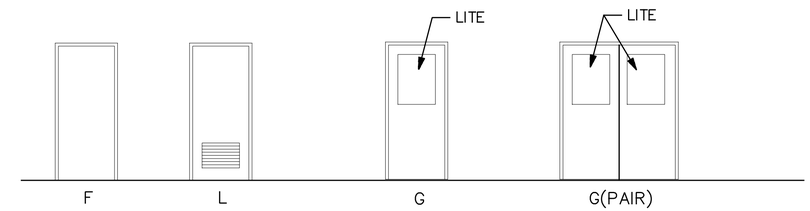

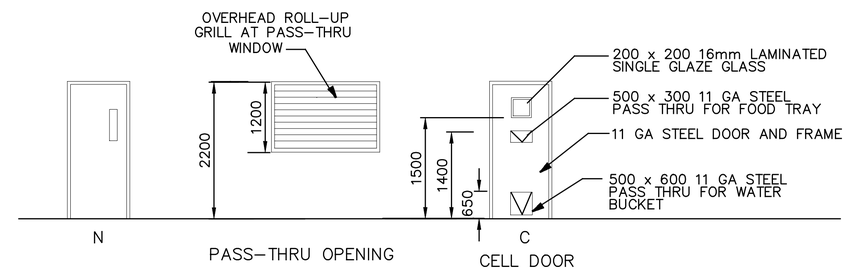

DOOR NOTES:

1. SEE DOOR SCHEDULE FOR DOOR AND FRAME SIZES.

TYPICAL DOOR TYPES

(NOT TO SCALE)

DOOR SCHEDULE NOTES:

1. CELL DOOR SHALL BE 11 GA STEEL DOOR WITH PASS-THRU WINDOWS. PROVIDE HINGED DOORS TO THESE PASS-THRU WINDOWS WITH PADLOCKS TO THE OUTSIDE.
2. PROVIDE 600 X 400 LOUVERS IN DOOR TYPE (L)
3. UNDERCUT DOORS BY 12 mm REQUIRED, EXCEPT NO UNDERCUT AT DOOR TYPE C.
4. PROVIDE PANIC HARDWARE, WHERE INDICATED.
5. PROVIDE 11 GA STEEL DOOR AND FRAME.
6. NO THRESHOLD OR DOOR SWEEP REQUIRED.
7. ALL DOOR GLAZING SHALL BE MIN. 8mm THICK PLEXIGLASS EXCEPT AT CELL DOORS WHERE GLAZING SHALL BE LAMINATED GLASS.

SYMBOL	DESCRIPTION	DATE	APR

DESIGNED BY: JLK
DATE: 29 OCTOBER 2007
DWN BY: JLK
SUBMITTED BY:
CHK BY: JLK
FILE NO.: AF0607A-AR08SC

US Army Corps of Engineers
Afghanistan Engineer District

AFGHANISTAN NATIONAL POLICE (ANP) DISTRICT HEADQUARTERS COMPOUNDS – 1 STORY HQ
VARIOUS LOCATIONS, AFGHANISTAN
1 STORY BUILDING
DOOR SCHEDULE AND DOOR TYPES

SHEET REFERENCE NUMBER:
A
A-8

10/23/2007
S:\Engineering & Construction\Engineering\00_RFPs in-progress\ANP\ANP ON 1-Story Design\ANP Dist HQ 1Story Design Changes 26Oct07\Microstation Files\Arch\AF0607A-AR08SC.dgn

ROOM FINISH SCHEDULE

ROOM NO.	ROOM NAME	FLOOR FINISH	BASE FINISH	WALLS FINISH	CEILING FINISH	CEILING HEIGHT	REMARKS
101	CORRIDOR	F2	B2	W2	C2	3.0 m	
102	LOBBY	F2	B2	W2	C2		
103	OFFICE	F2	B2	W2	C2		
104	WEAPONS STORAGE	F1	B2	W2	C2		
105	OFFICE	F2	B2	W2	C2		
106	STORAGE	F1	B2	W2	C2		
107	ABOLUTION	F3	B3	W3	C2		
108	TOILET	F3	B3	W3	C2		
109	TOILET	F3	B3	W3	C2		
110	GUARD ROOM	F2	B2	W2	C2		
111	CORRIDOR	F2	B2	W2	C2		
112	PRISONER'S ROOM	F2	B2	W2	C2		
113	PRISONER'S ROOM	F2	B2	W2	C2		
114	SOLDIER'S BARRACKS	F2	B2	W2	C2		
115	SOLDIER'S BARRACKS	F2	B2	W2	C2		
116	TOILET	F3	B3	W3	C2		
117	LOBBY	F2	B2	W2	C2		
118	COVERED LOADING	F1	B5	--	--		
119	SOLDIER'S BARRACKS	F2	B2	W2	C2		
120	DINING ROOM/SHURA	F2	B2	W2	C2	5.6 m	
121	KITCHEN	F2	B2	W2	C2	3.0 m	
122	TOILET	F3	B3	W3	C2		
123	POLICE CHIEF	F2	B2	W2	C2		
124	DEPUTY POLICE CHIEF	F2	B2	W2	C2		
125	NIGHT GUARD	F2	B2	W2	C2		
126	MECHANICAL ROOM	F2	B2	W2	C2		

ROOM FINISH SCHEDULE LEGEND

FLOOR FINISH
- F1 SEALED CONCRETE
- F2 TERRAZZO TILE
- F3 CERAMIC TILE

BASE FINISH
- B2 TERRAZZO
- B3 CERAMIC TILE
- B5 NO BASE

WALL FINISH
- W2 PAINTED PLASTER
- W3 CERAMIC TILE

CEILING FINISH
- C2 PAINTED PLASTER

ROOM FINISH SCHEDULE NOTES:

1. ALL INTERIOR SURFACES NOT PROVIDED WITH A COLOR FACTORY FINISH SHALL RECEIVE A PAINT FINISH.
2. PAINTED PLASTER CEILING FINISH SHALL BE OFF-WHITE IN COLOR. ALL OTHER INTERIOR COLORS SHALL BE SELECTED FROM EARTH TONE COLORS; GRAYS, BEIGES, ETC. SUBMIT PAINT COLOR BOARD TO CONTRACTING OFFICER'S REPRESENTATIVE FOR APPROVAL PRIOR TO INSTALLATION.
3. ALL INTERIOR DOORS, WINDOWS, AND FRAMES SHALL HAVE A SEMI-GLOSS FINISH.
4. ALL WALL PENETRATIONS SHALL BE SEALED TO PROVIDE A NEAT APPEARANCE.
5. SEALANT COLORS SHALL MATCH COLOR OF ADJACENT FINISH.
6. PLASTER AND CERAMRIC TILE WALL FINISH, WHERE SCHEDULED, SHALL EXTEND TO UNDERSIDE OF CEILING.
7. PLASTER CEILINGS SHALL HAVE A FLAT PAINT FINISH EXCEPT AT TOILETS, ABOLUTION, AND KITCHEN WHERE PAINT FINISH SHALL BE SEMI-GLOSS.

EXTERIOR FINISH NOTES:

1. ALL EXTERIOR SURFACES NOT PROVIDED WITH A COLOR FACTORY FINISH SHALL RECEIVE A PAINT FINISH.
2. ALL EXTERIOR COLORS SHALL MATCH ADJACENT BUILDINGS TO THE GREATEST EXTENT POSSIBLE. SUBMIT PAINT COLOR BOARD TO CONTRACTING OFFICER'S REPRESENTATIVE FOR APPROVAL PRIOR TO INSTALLATION.
3. ALL EXTERIOR DOORS, WINDOWS, FRAMES, SOFFIT, FASCIA, AND TRIM SHALL HAVE A SEMI-GLOSS FINISH.
4. ALL WALL PENETRATIONS SHALL BE SEALED WATER-TIGHT AND SHALL HAVE A NEAT APPEARANCE.
5. SEALANT COLORS SHALL MATCH COLOR OF ADJACENT FINISH.

SYMBOL	DESCRIPTION	DATE	APR

DESIGNED BY: JLK | DATE: 29 OCTOBER 2007
DWN BY: JLK | SUBMITTED BY:
CHK BY: JLK | FILE NO.: AF0607A-AR09SC

US Army Corps of Engineers
Afghanistan Engineer District

AFGHANISTAN NATIONAL POLICE (ANP) DISTRICT HEADQUARTERS COMPOUNDS – 1 STORY HQ
VARIOUS LOCATIONS, AFGHANISTAN
1 STORY BUILDING
ROOM FINISH SCHEDULE

SHEET REFERENCE NUMBER:
A
A-9

10/23/2007
S:\Engineering & Construction\Engineering\00_RFPs in-progress\ANP\ANP 01-Story Design\ANP Dist HQ 1Story Design Changes 26Oct07\Microstation files\arch\AF0607A-AR09SC.dgn

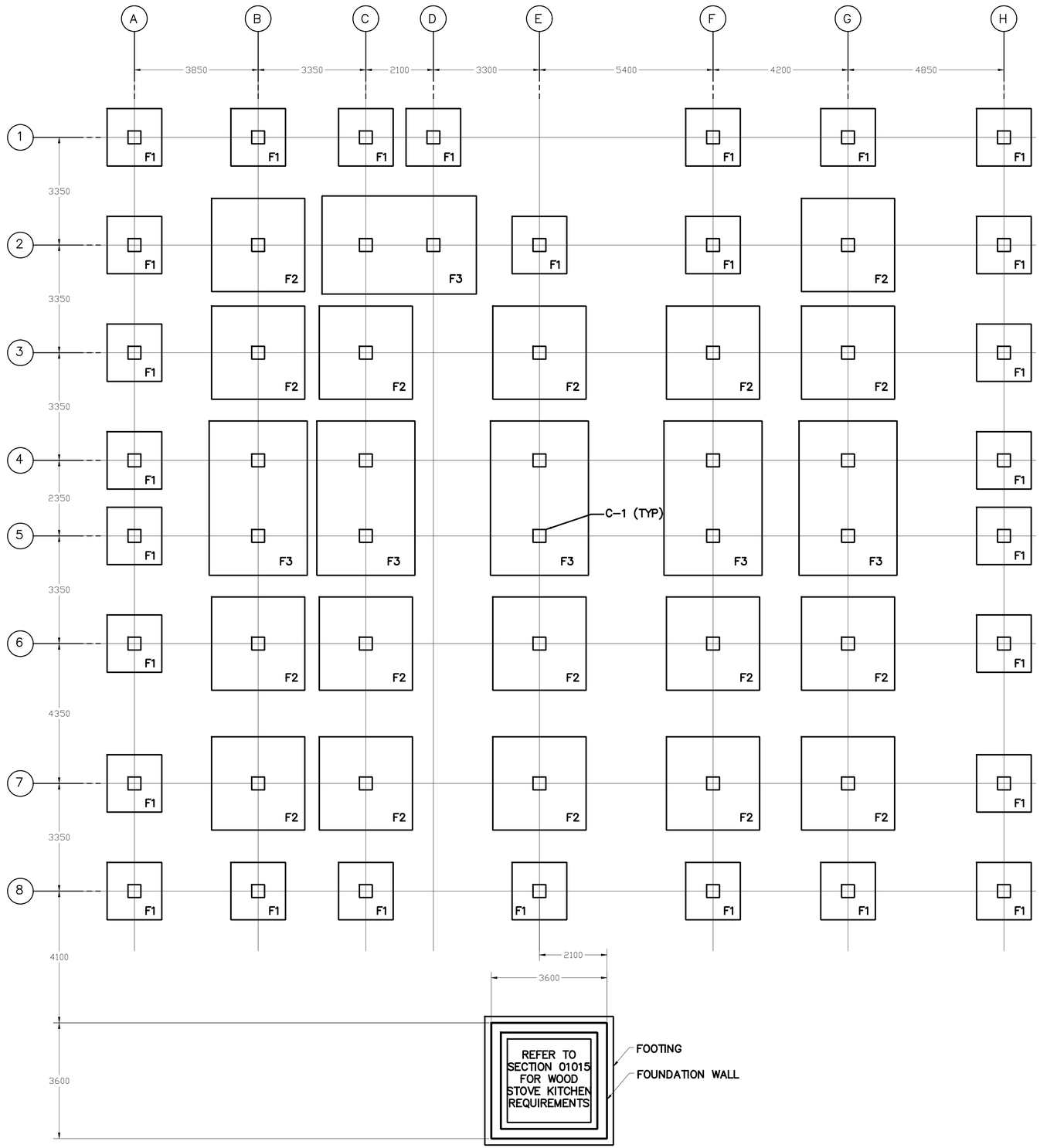

NOTES:

1. GEOTECHNICAL INVESTIGATION SHALL CONFIRM BEARING CAPACITY TO BE NO LESS THAN 0.75 KG/SQ CM. IF GEOTECHNICAL INVESTIGATION SHOWS LESS THAN 0.75 KG/SQ CM, CONTRACTOR SHALL REDESIGN FOOTINGS BASED ON THE GEOTECHNICAL INVESTIGATION, SEE SPECIFICATION 01015 PARA 2.1, GEOTECHNICAL, FOUNDATION AND SURVEY.
2. DEAD LOADS CONSIST OF THE WEIGHTS OF ALL MATERIAL OF CONSTRUCTION INCORPORATED IN THE BUILDING. LIVE LOADS USED FOR DESIGN SHALL BE IN ACCORDANCE WITH THE ASCE STANDARDS AND MINIMUM DESIGN LOADS FOR BUILDINGS AND OTHER STRUCTURES, ASCE 7–02.
3. WIND LOADS SHALL BE CALCULATED IN ACCORDANCE WITH ASCE 7–02 USING A "3 SECOND GUST" WIND SPEED OF 125 KM/HR. ALL FACILITIES SHALL BE CLASSIFIED AS A MINIMUM OF CATEGORY II IN ACCORDANCE WITH TABLE 1–1 IN ASCE 7–02.
4. THE BUILDING AND ALL PARTS THEREOF SHALL BE DESIGNED FOR THE SEISMIC REQUIREMENTS AS DEFINED BY THE INTERNATIONAL BUILDING CODE 2000. SITE SPECIFIC DATA: SPECTRAL COORDINATES SS=1.65g AND S1=0.75g.
5. REFER TO DWG S–5 FOR FOOTING SCHEDULE. TOP OF FOOTING SHALL BE LOCATED 800mm (MIN) BELOW FINISHED GRADE.
6. ALL CONCRETE COLUMNS ARE TYPE C–1. REFER TO SECTION 10/S–5.

3 1.50 0 3 4.5
1:75

UNLESS OTHERWISE NOTED, LINEAR DIMENSIONS SHOWN ARE IN MILLIMETERS.

SYMBOL	DESCRIPTION	DATE	APR

DESIGNED BY: TCP
DATE: 29 OCTOBER 2007
DWN BY: JLK
SUBMITTED BY:
CHK BY: JLK
FILE NO.: AF0607A–SB01PN

US Army Corps of Engineers
Afghanistan Engineer District

AFGHANISTAN NATIONAL POLICE (ANP) DISTRICT HEADQUARTERS COMPOUNDS – 1 STORY HQ
VARIOUS LOCATIONS, AFGHANISTAN
1 STORY BUILDING
FOUNDATION PLAN

SHEET REFERENCE NUMBER:
A
S–1

10/23/2007
S:\Engineering & Construction\Engineering\00_RFPs in-progress\ANP\ANP_ON_1-Story Design\AN\Dist_HQ_1Story_Design_Changes_26Oct07\Microstation_files\struct\AF0607A-SB01PN.dgn

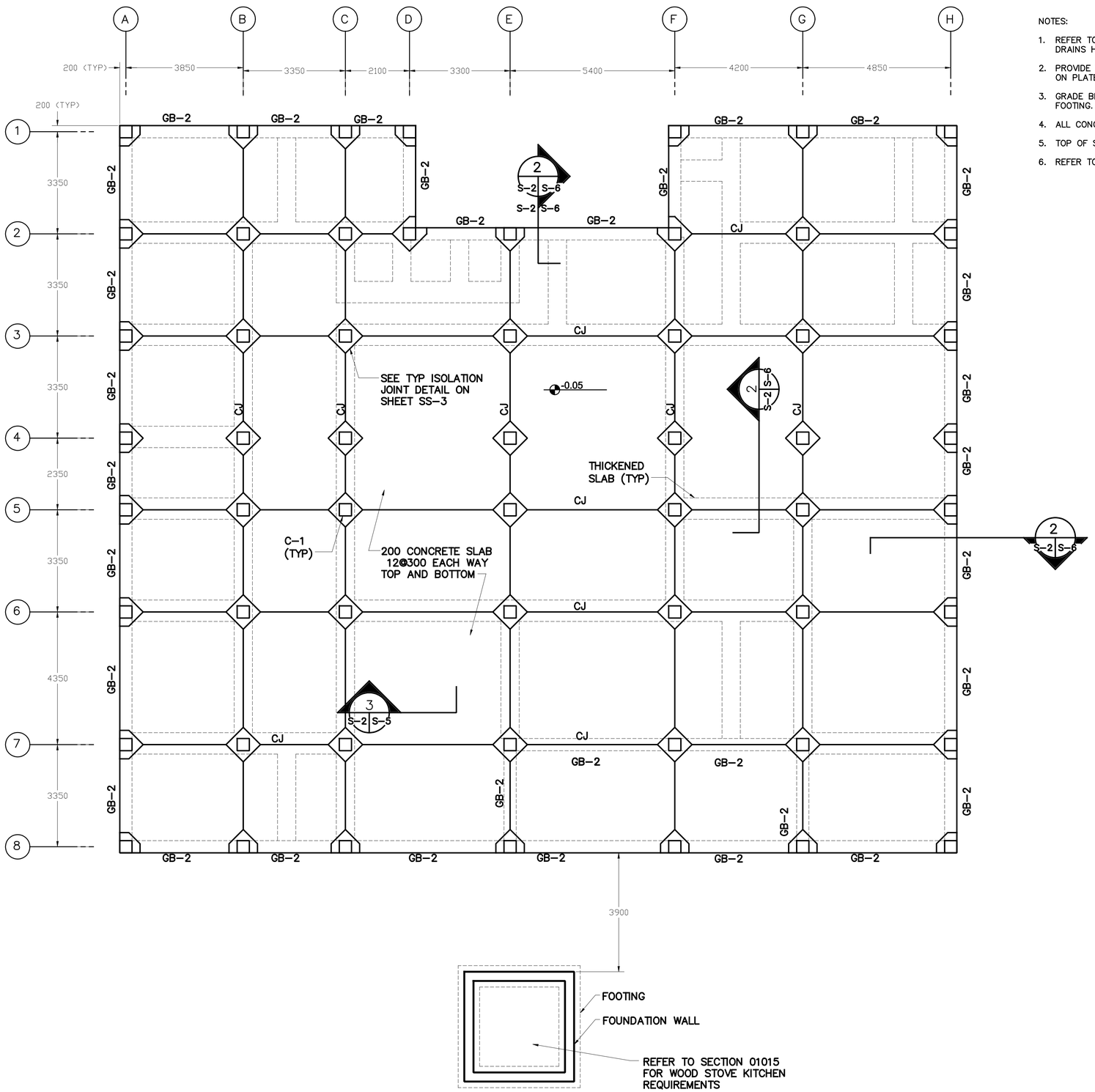

NOTES:

1. REFER TO PLUMBING AND ARCHITECTURAL PLANS FOR FLOOR DRAIN LOCATIONS. NOT ALL DRAINS HAVE BEEN SHOWN. FLOOR SHALL BE SLOPED TO DRAIN.
2. PROVIDE THICKENED SLAB UNDER ALL INTERIOR PARTITIONS. REFER TO SECTIONS 1 AND 2 ON PLATE S-5 FOR ADDITIONAL INFORMATION.
3. GRADE BEAM SHALL EXTEND FROM COLUMN SPREAD FOOTING TO COLUMN SPREAD FOOTING. BOTTOM OF GRADE BEAM TO COINCIDE WITH TOP OF COLUMN FOOTING.
4. ALL CONCRETE COLUMNS ARE TYPE C-1. REFER TO SECTION 10/S-5.
5. TOP OF SLAB AND GRADE BEAM ELEVATIONS ARE AT 50mm BELOW FINISHED FLOOR.
6. REFER TO SHEET SS-3 FOR TYPICAL CONTROL JOINT (CJ) DETAIL.

3 1.50 0 3 4.5
1:75

UNLESS OTHERWISE NOTED, LINEAR DIMENSIONS SHOWN ARE IN MILLIMETERS.

SYMBOL	DESCRIPTION	DATE	APR

DESIGNED BY: TCP	DATE: 29 OCTOBER 2007	
DWN BY: JLK	SUBMITTED BY:	
CHK BY: JLK	FILE NO.: AF0607A-SB02PN	

US Army Corps of Engineers
Afghanistan Engineer District

AFGHANISTAN NATIONAL POLICE (ANP) DISTRICT HEADQUARTERS COMPOUNDS – 1 STORY HQ
VARIOUS LOCATIONS, AFGHANISTAN
1 STORY BUILDING
GRADE BEAM PLAN

SHEET REFERENCE NUMBER:
A
S-2

10/23/2007
S:\Engineering & Construction\Engineering\00_RFPs in-progress\ANP\ANP ON 1-Story Design\ANP Dist HQ 1Story Design Changes 26Oct07\Microstation Files\struct\AF0607A-SB02PN.dgn

NOTES:

1. TOP OF LOW ROOF SLAB AND LOW ROOF BEAMS IS AT 3200 A.F.F.
2. COORDINATE ROOF OPENING REQUIREMENTS WITH OTHER DISCIPLINES. PROVIDE ADDITIONAL REINFORCEMENT AROUND OPENINGS PER TYPICAL DETAIL ON DWG SS-2.
3. REFER TO SHEET S-7 FOR STANDARD BEAM AND COLUMN CONSTRUCTION DETAILS.

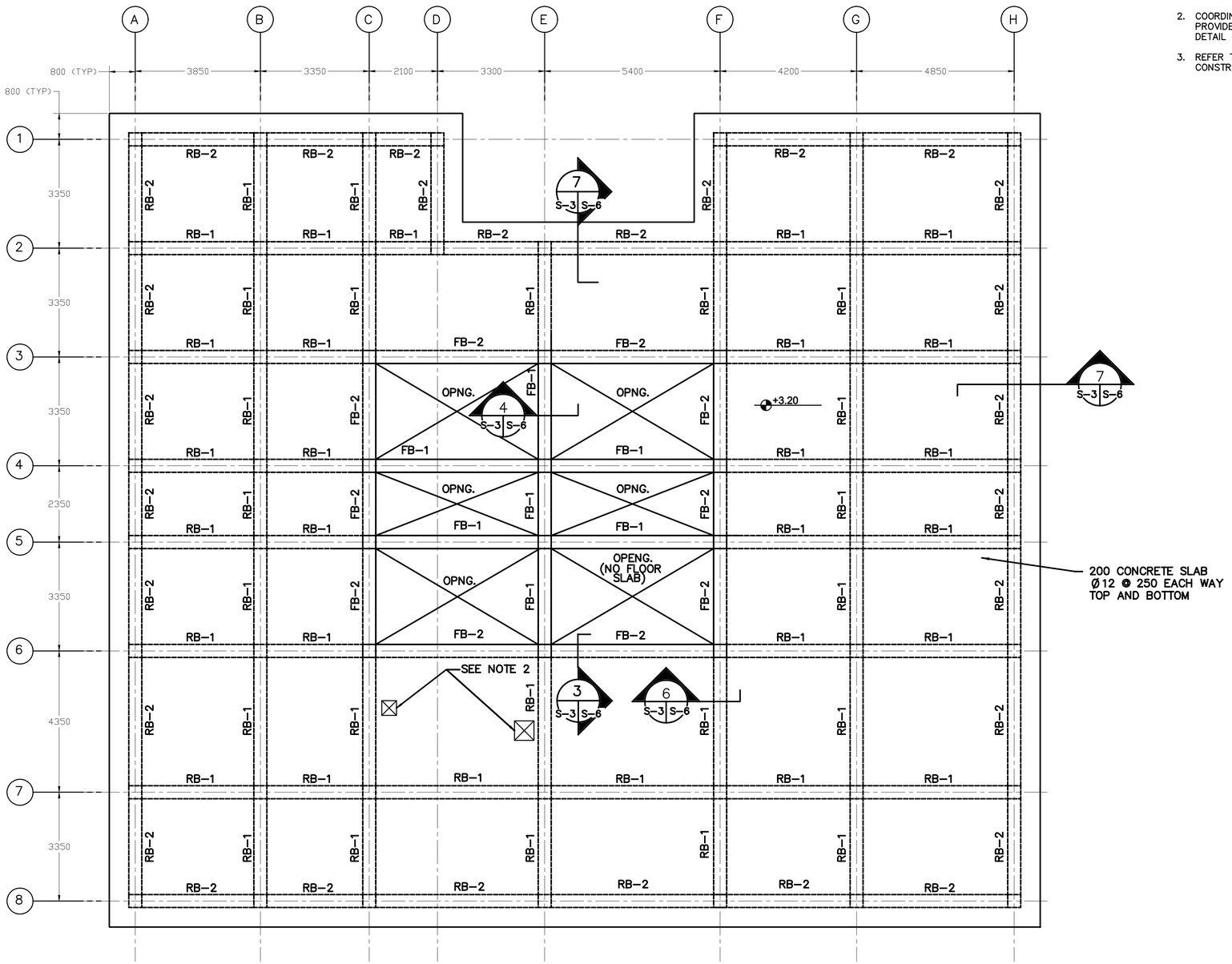

UNLESS OTHERWISE NOTED, LINEAR DIMENSIONS SHOWN ARE IN MILLIMETERS.

SYMBOL	DESCRIPTION	DATE	APR

DESIGNED BY: TCP
DATE: 29 OCTOBER 2007
DWN BY: TCP
SUBMITTED BY:
CHK BY: KGO
FILE NO.: AF0607A-S803PN

US Army Corps of Engineers
Afghanistan Engineer District

AFGHANISTAN NATIONAL POLICE (ANP) DISTRICT HEADQUARTERS COMPOUNDS – 1 STORY HQ
VARIOUS LOCATIONS, AFGHANISTAN
1 STORY BUILDING
LOWER ROOF BEAM PLAN

SHEET REFERENCE NUMBER:
A
S-3

10/23/2007
S:\Engineering & Construction\Engineering\00_RFPs in progress\ANP\ANP_ON_1-Story Design\ANP_Dist_HQ_1Story_Design_Changes_260907\Microstation Files\struct\AF0607A-S803PN.dgn

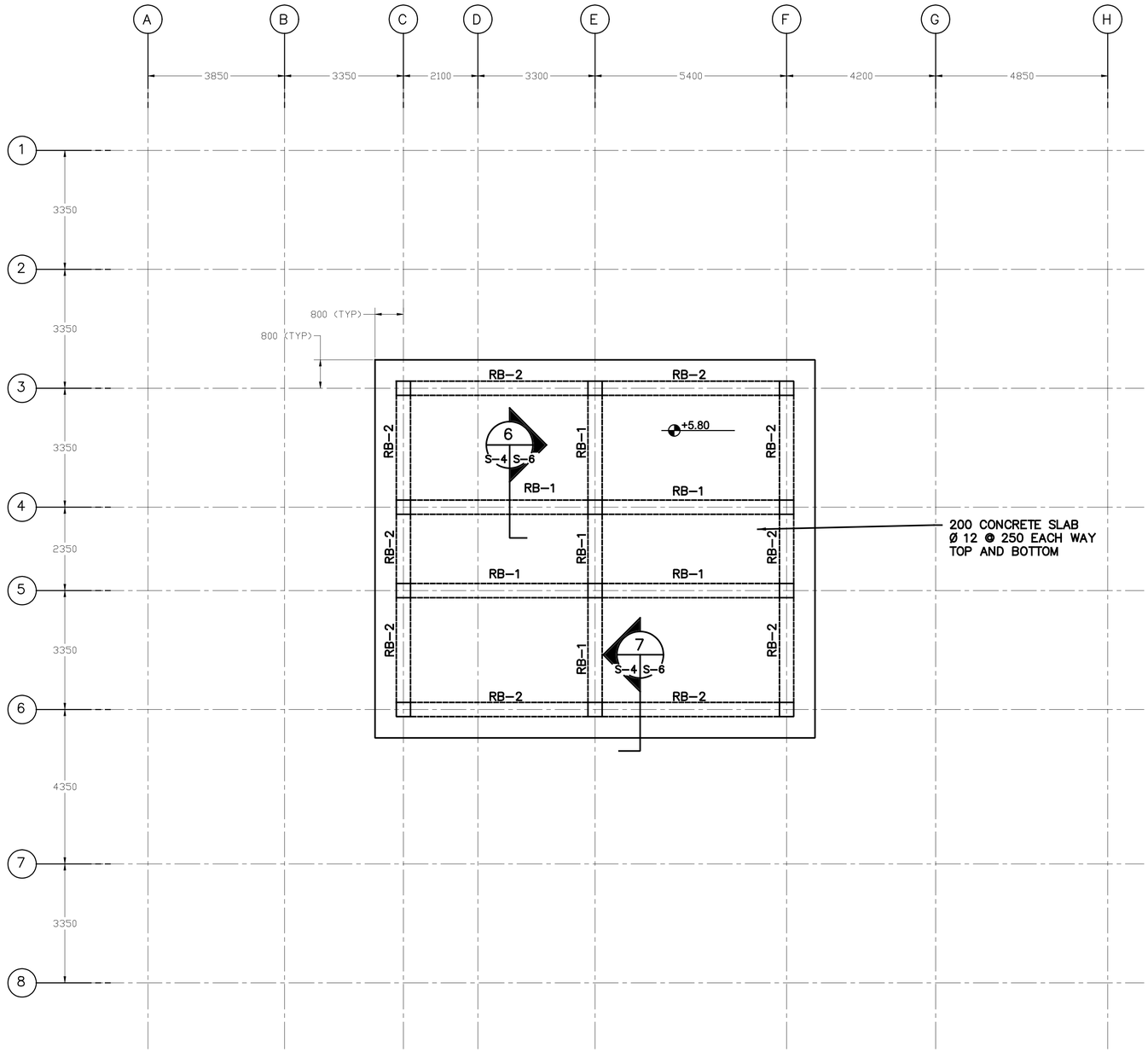

NOTES:

1. TOP OF HIGH ROOF SLAB AND HIGH ROOF BEAMS IS AT 5800 A.F.F.
2. COORDINATE ROOF OPENING REQUIREMENTS WITH OTHER DISCIPLINES. PROVIDE ADDITIONAL REINFORCEMENT AROUND OPENINGS PER TYPICAL DETAIL ON DWG SS-2.
3. REFER TO SHEET S-7 FOR STANDARD BEAM AND COLUMN CONSTRUCTION DETAILS.

3 1.50 0 3 4.5
1:75

UNLESS OTHERWISE NOTED, LINEAR DIMENSIONS SHOWN ARE IN MILLIMETERS.

SYMBOL	DESCRIPTION	DATE	APR

DESIGNED BY: TCP
DWN BY: TCP
CHK BY: KGO
DATE: 29 OCTOBER 2007
SUBMITTED BY:
FILE NO.: AF0607A-SB04PN

US Army Corps of Engineers
Afghanistan Engineer District

AFGHANISTAN NATIONAL POLICE (ANP) DISTRICT HEADQUARTERS COMPOUNDS – 1 STORY HQ
VARIOUS LOCATIONS, AFGHANISTAN
1 STORY BUILDING
HIGH ROOF BEAM PLAN

SHEET REFERENCE NUMBER:
A
S-4

10/23/2007
S:\Engineering & Construction\Engineering\00_RFPs in-progress\ANP\ANP ON-Story Design\ANP Dist HQ 1Story Design Changes 26Oct07\Microstation Files\struct\AF0607A-SB04PN.dgn

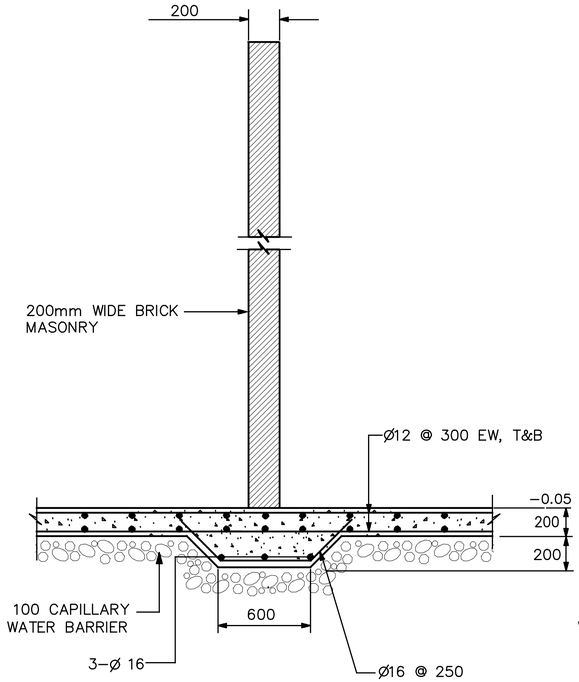

NOTE:
1. TYPICAL AT ALL INTERIOR PARTITIONS EXCEPT WHERE CONCRETE PARTITIONS ARE INDICATED IN ARCHITECTURAL FLOOR PLANS.

TYPICAL PARTITION DETAIL (2 / S-2 S-5)
NOT TO SCALE

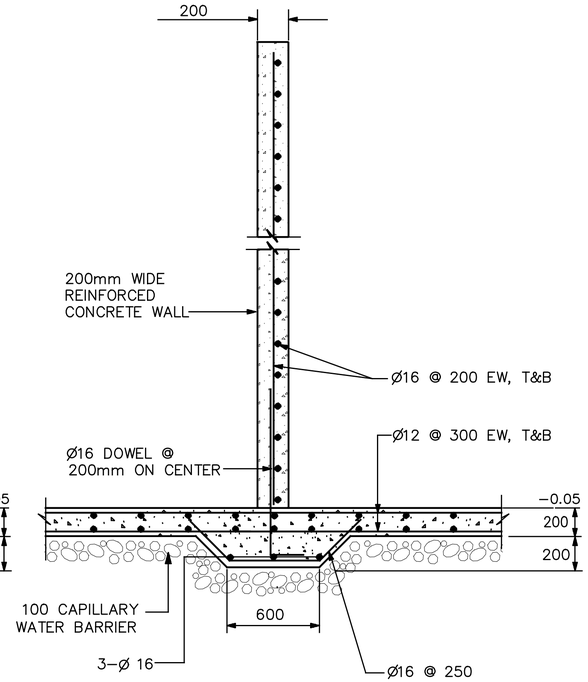

NOTES:
1. SEE ARCHITECTURAL FLOOR PLANS FOR LOCATION OF CONCRETE PARTITIONS.
2. SIMILAR CONDITION AT EXTERIOR CONCRETE WALLS IDENTIFIED IN ARCHITECTURAL FLOOR PLANS – PROVIDE VERTICAL AND HORIZONTAL REINFORCEMENT INDICATED.

REINF. CONCRETE PARTITION DETAIL (1 / S-2 S-5)
NOT TO SCALE

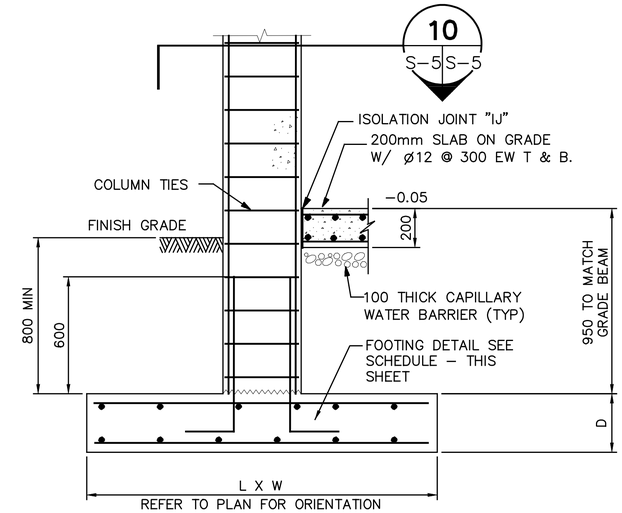

TYPICAL COLUMN AND FOOTING
NOT TO SCALE

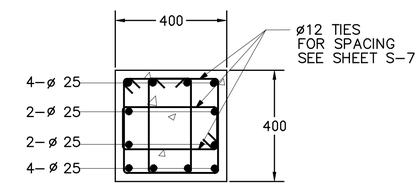

C-1

SECTION (10 / S-5 S-5)
SCALE=1:10

FOOTING SCHEDULE				
FTG TYPE	SIZE (L X W)	DEPTH (D)*	REINFORCING	
			TOP EW	BOTT EW
F1	1700 X 1700	250	Ø25 @ 300	Ø 25 @ 300
F2	2700 X 2700	425	Ø25 @ 350	Ø 25 @ 350
F3	4800 X 3050	425	Ø25 @ 350	Ø 25 @ 350

*TOP FOOTING ELEVATION SHALL BE THE SAME FOR ALL FOOTINGS.
*FOR THE COMBINED FOOTINGS, CENTER ON THE CENTROID FOR THE TWO COLUMNS.
*REFER TO FOUNDATION PLAN FOR ORIENTATION.

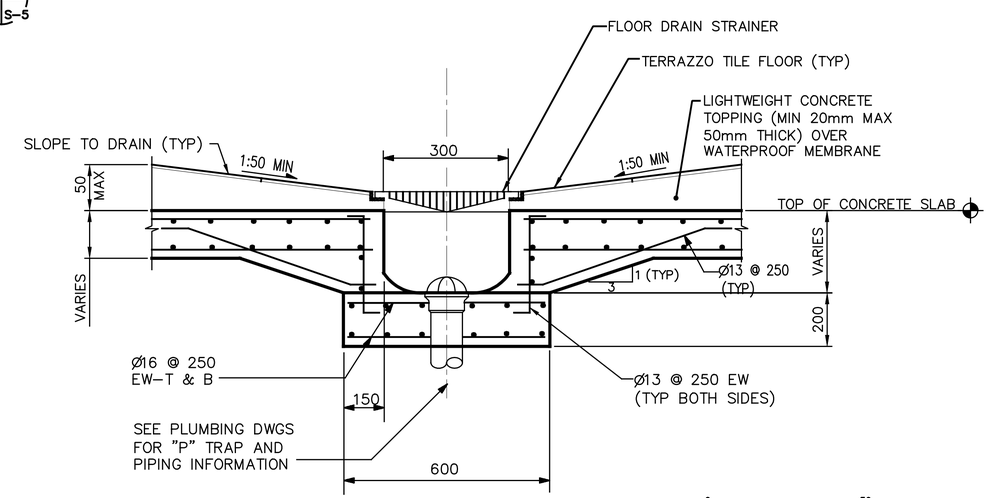

SECTION (3 / S-2 S-5)
NOT TO SCALE

0 .50 1.00
1:10

UNLESS OTHERWISE NOTED, SHOWN ARE IN MILLIMETERS.

SYMBOL	DESCRIPTION	DATE	APR

DESIGNED BY: TCP
DATE: 29 OCTOBER 2007
DWN BY: JLK
SUBMITTED BY:
CHK BY: JLK
FILE NO.: AF0607A-SB05DT

US Army Corps of Engineers
Afghanistan Engineer District

AFGHANISTAN NATIONAL POLICE (ANP) DISTRICT HEADQUARTERS COMPOUNDS – 1 STORY HQ
VARIOUS LOCATIONS, AFGHANISTAN
1 STORY BUILDING
FOOTING AND COLUMN DETAILS

SHEET REFERENCE NUMBER:
A
S-5

10/23/2007
S:\Engineering & Construction\Engineering\00_RFPs in-progress\ANP\ANP ONE-Story Design\ANP Dist_HQ_1Story_Design_Changes_26OCT07\Microstation Files\struct\AF0607A-SB05DT.dgn

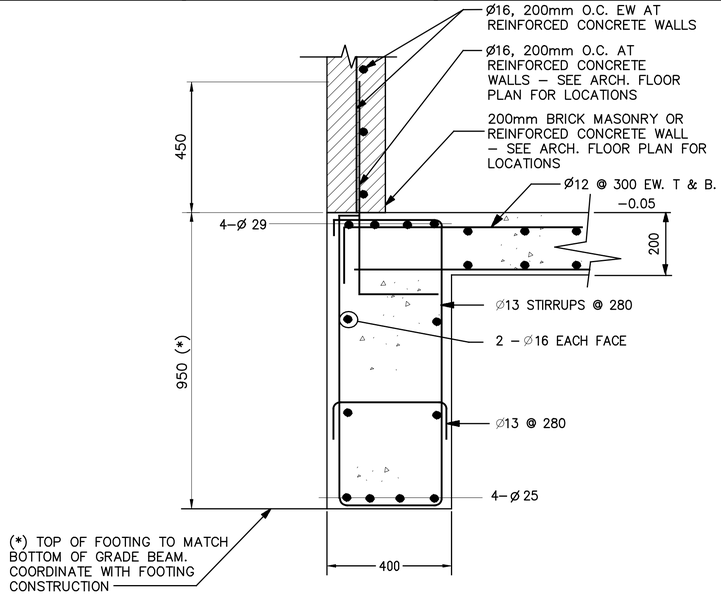

GB–2

SECTION 2 S–2 S–6
SCALE 1:10

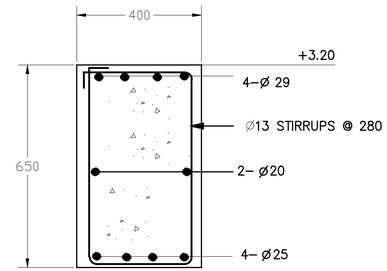

FB–1

SECTION 4 S–3 S–6
SCALE 1:10

NOTE:

1. GRADE BEAM REINFORCING IS CONTINUOUS THROUGH THE COLUMN.

2. COORDINATE REBAR PLACEMENT BETWEEN BEAMS SO THAT A MAXIMUM NUMBER OF REBAR ARE CONTINUOUS. BEND BARS AS REQUIRED.

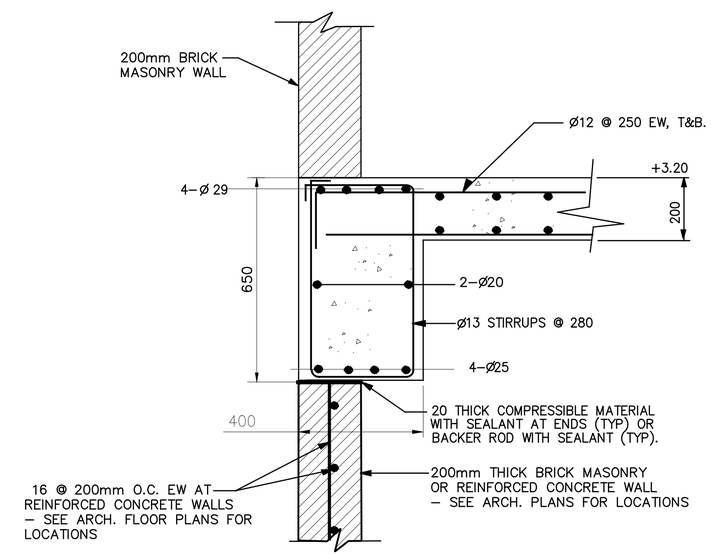

FB–2

SECTION 3 S–3 S–6
SCALE 1:10

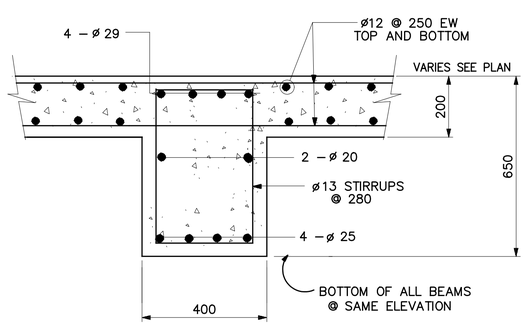

RB–1

SECTION 6 S–3,S–4 S–6
SCALE= NONE

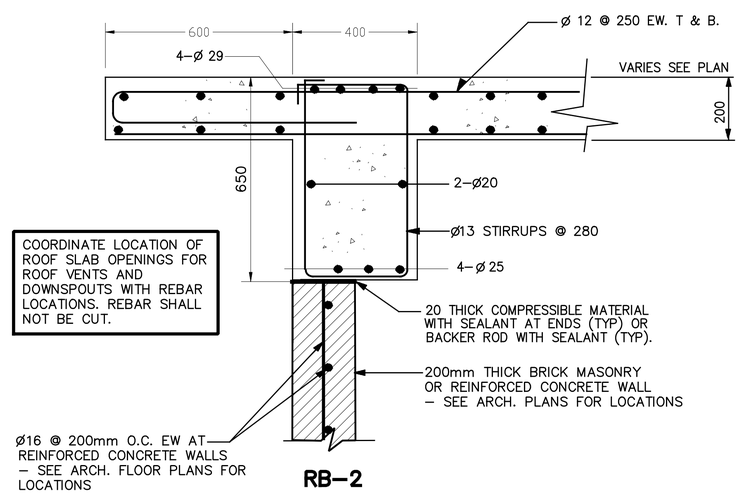

COORDINATE LOCATION OF ROOF SLAB OPENINGS FOR ROOF VENTS AND DOWNSPOUTS WITH REBAR LOCATIONS. REBAR SHALL NOT BE CUT.

RB–2

SECTION 7 S–3,S–4 S–6
SCALE 1:10

0 .50 1.00
1:10

UNLESS OTHERWISE NOTED, LINEAR DIMENSIONS SHOWN ARE IN MILLIMETERS.

SYMBOL	DESCRIPTION	DATE	APR

DESIGNED BY: TCP
DATE: 29 OCTOBER 2007
DWN BY: JLK
SUBMITTED BY:
CHK BY: JLK
FILE NO.: AF0607A–SB06DT

US Army Corps of Engineers
Afghanistan Engineer District

AFGHANISTAN NATIONAL POLICE (ANP) DISTRICT HEADQUARTERS COMPOUNDS – 1 STORY HQ
VARIOUS LOCATIONS, AFGHANISTAN
1 STORY BUILDING
BEAM DETAILS

SHEET REFERENCE NUMBER:
A
S–6

10/23/2007
S:\Engineering & Construction\Engineering\00_RFPs in-progress\ANP\ANP_ON_1-Story Design\AN\Dist_HQ_1Story_Design_Changes_26Oct07\Microstation Files\struct\AF0607A-SB06DT.dgn

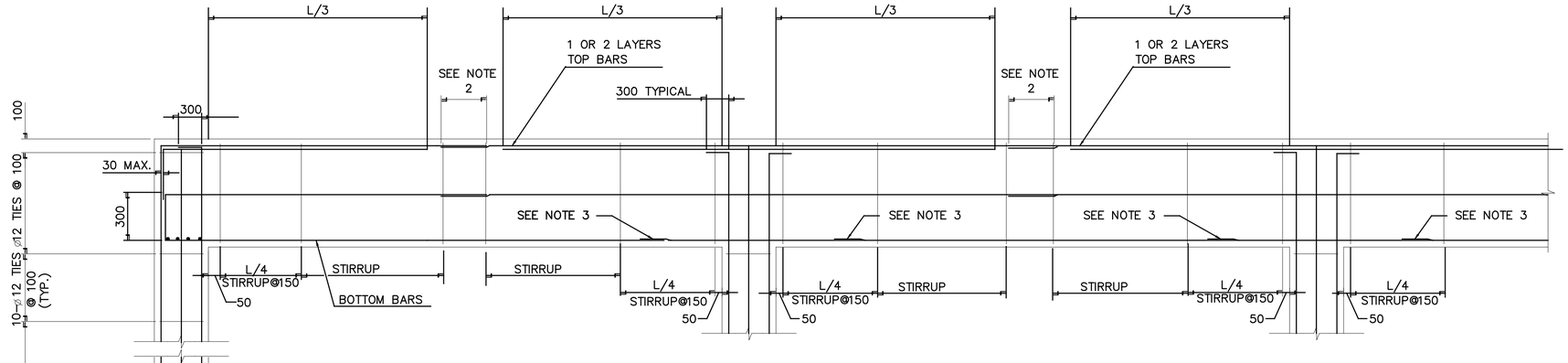

TYPICAL ROOF BEAMS AND FLOOR BEAMS AT DISCONTINUOUS COLUMNS

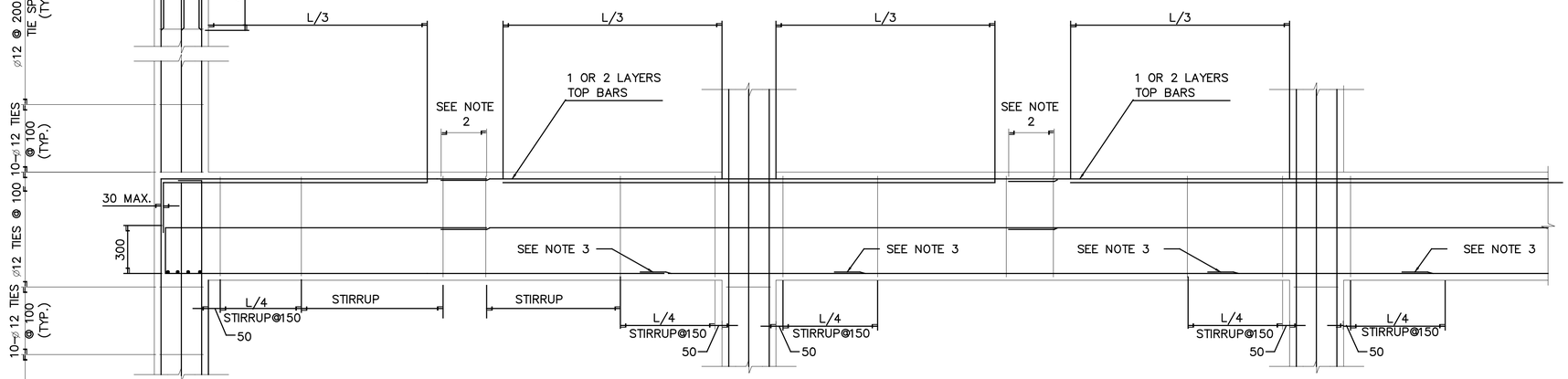

TYPICAL FLOOR BEAMS

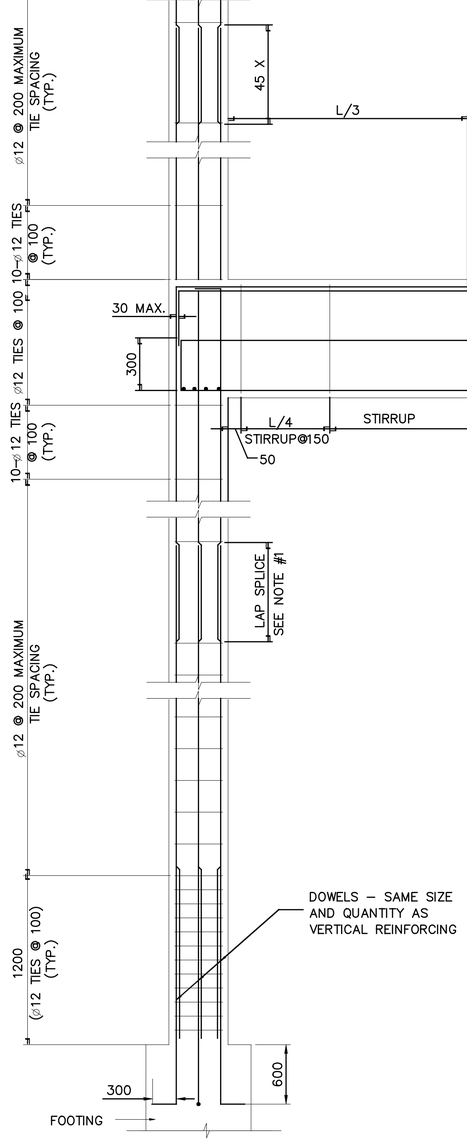

NOTES:

1. ALL LAP SPLICES IN BEAMS AND COLUMNS SHALL BE CLASS B SPLICES

2. PROVIDE A 150mm MAXIMUM OF STIRRUP SPACING AT LAP SPLICES, AS SHOWN ON DRAWING. ALL SPLICES NOTED SHALL OCCUR AT MIDSPAN. REFER INDIVIDUAL BEAM DETAILS FOR STIRRUP SPACING.

3. THE LAP SPLICES SHOWN SHALL BE PERMITTED IN SPANS MEASURING 6 METERS OR MORE FROM CENTERLINES OF SUPPORTS (COLUMNS OR WALLS) ONLY. SPLICES INDICATED SHALL BE LOCATED ONE METER FROM THE FACE OF THE COLUMN, AS SHOWN.

4. BEAM STEEL NOT SHOWN FOR CLARITY.

STANDARD BEAM AND COLUMN DETAIL

1 .50 0 1
1:20

UNLESS OTHERWISE NOTED, LINEAR DIMENSIONS SHOWN ARE IN MILLIMETERS.

SYMBOL	DESCRIPTION	DATE	APR

DESIGNED BY: TCP
DATE: 29 OCTOBER 2007
DWN BY: TCP
SUBMITTED BY:
CHK BY: KGO
FILE NO.: AF0607A–SB07DT

US Army Corps of Engineers
Afghanistan Engineer District

AFGHANISTAN NATIONAL POLICE (ANP) DISTRICT HEADQUARTERS COMPOUNDS – 1 STORY HQ
VARIOUS LOCATIONS, AFGHANISTAN
1 STORY BUILDING
STANDARD BEAM AND COLUMN DETAIL

SHEET REFERENCE NUMBER:
A
S–7

10/23/2007
S:\Engineering & Construction\Engineering\00_RFPs in-progress\ANP\ANP ONE-Story Design\ANP Dist HQ 1Story Design Changes 26Oct07\Microstation files\struct\AF0607A-SB07DT.dgn

NOTES:
1. FOR LEGENDS, ABBREVIATIONS AND STANDARD MECHANICAL DETAILS SEE SHEETS SM-1 AND SM-3.
2. FOR EQUIPMENT SCHEDULES AND CONTROL DIAGRAMS SEE SHEET SM-2.
3. ALL DIMENSIONS ARE IN MM UNLESS NOTED OTHERWISE.
4. PROVIDE EACH EXHAUST FAN WITH MANUFACTURER'S STANDARD EXHAUST GRILL AND GRAVITY BACKDRAFT DAMPER.
5. PROVIDE 200 x 100 ALL-WEATHER LOUVER WITH BIRDSCREEN.
6. KITCHEN EXHAUST HOOD WITH ALUMINUM FILTERS AND SEALED DUCT CONNECTION TO EXHAUST FAN. SIZE OF HOOD TO MATCH COOKING EQUIPMENT PROVIDED.
7. EXHAUST FAN EF-A-5 CAPACITY INDICATED HERE IS MINIMUM BASED ON 1200W X 3000L HOOD: ITS CAPACITY SHALL BE REVISED UPWARD TO MATCH AIRFLOW PERFORMANCE REQUIRED BY THE KITCHEN HOOD EQUIPMENT MANUFACTURER. PROPANE STOVE FLUE DUCT SHALL CONNECT TO KITCHEN EXHAUST HOOD.

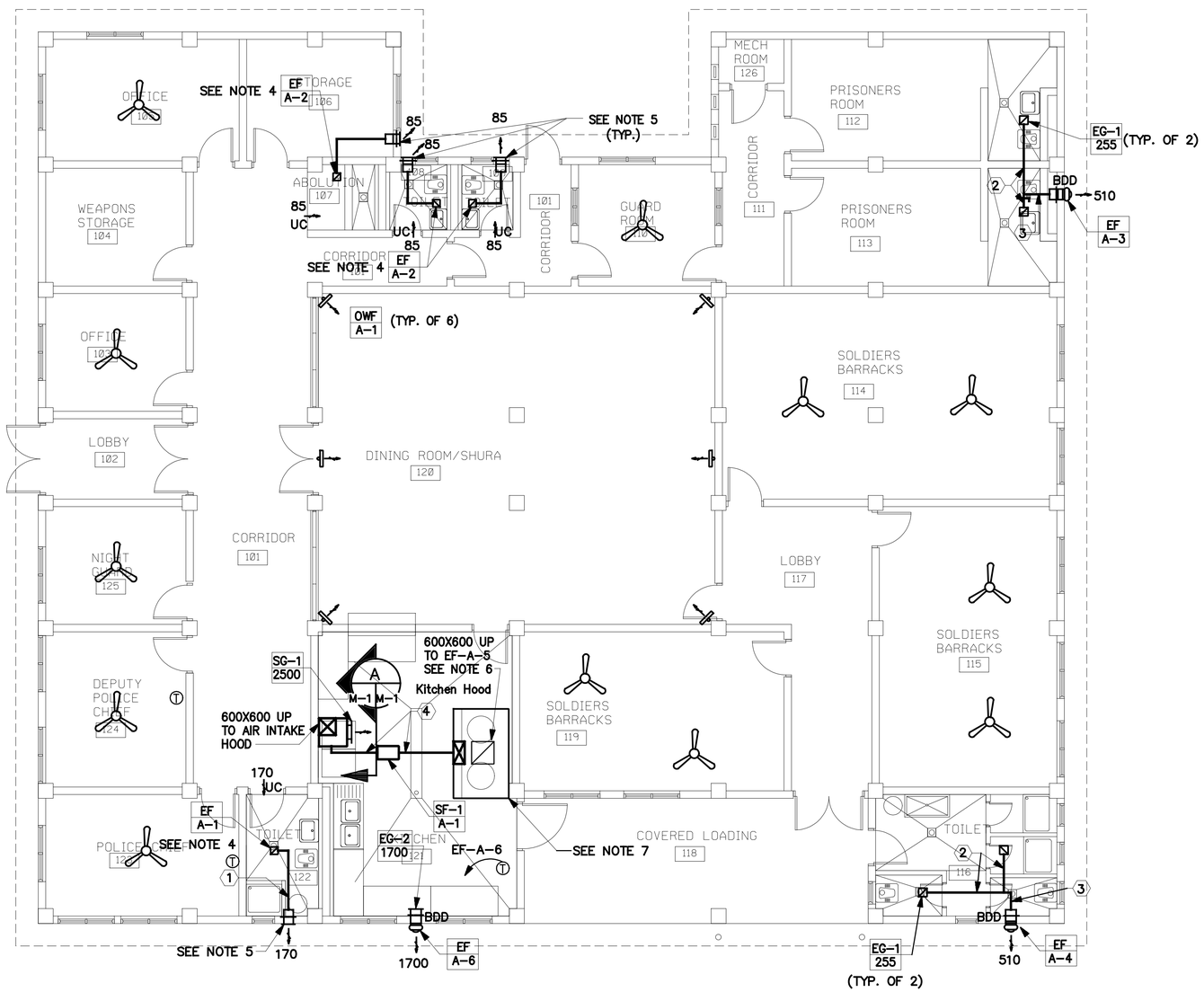

HVAC PLAN
SCALE= 1: 75

DUCT SIZING LEGEND

1	200 X 100
2	200 X 150
3	200 X 200
4	600 X 300

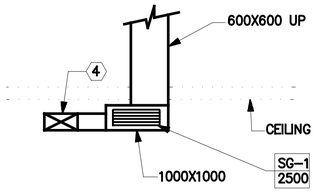

KITCHEN

DETAIL A M-1
SCALE 1: 50

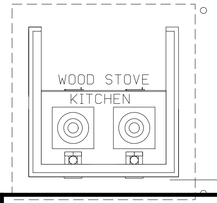

1 0 1 2 3 4
1:50

3 1.50 0 3 4.5
1:75

UNLESS OTHERWISE NOTED, LINEAR DIMENSIONS SHOWN ARE IN MILLIMETERS.

SYMBOL	DESCRIPTION	DATE	APR

DESIGNED BY: RMS
DATE: 29 OCTOBER 2007
DWN BY: JRP
SUBMITTED BY:
CHK BY: JLK
FILE NO.: AF0607A-MH01PN

US Army Corps of Engineers
Afghanistan Engineer District

AFGHANISTAN NATIONAL POLICE (ANP) DISTRICT HEADQUARTERS COMPOUNDS – 1 STORY HQ
VARIOUS LOCATIONS, AFGHANISTAN
1 STORY BUILDING
HVAC PLAN

SHEET REFERENCE NUMBER:
A
M-1

10/25/2007
S:\Engineering & Construction\Engineering\00 RFPs in-progress\ANP\ANP ON 1-Story Design\ANP Dist HQ 1Story Design Changes 26Oct07\Microstation files\mech\AF0607A-MH01PN.dgn

NOTES:
1. PROVIDE DOUBLE WALL TYPE METAL VENT THROUGH EXTERIOR WALL FOR VENTING OF WOOD STOVES, TOP AT BOTTOM OF CONCRETE BEAM. WOOD STOVES TO BE PROVIDED BY OCCUPANTS. COORDINATE SIZE OF VENT THROUGH WALL WITH WOOD STOVE MANUFACTURER'S RECOMMENDATIONS.

2. PROVIDE 25MM GAS SUPPLY LINE WITH A SERVICE SHUT-OFF VALVE DOWN TO THE COOKING STOVES. GAS PIPING AND CONNECTION TO INDIVIDUAL STOVES SHALL BE IN CONFORMANCE WITH STOVE MANUFACTURER RECOMMENDATIONS.

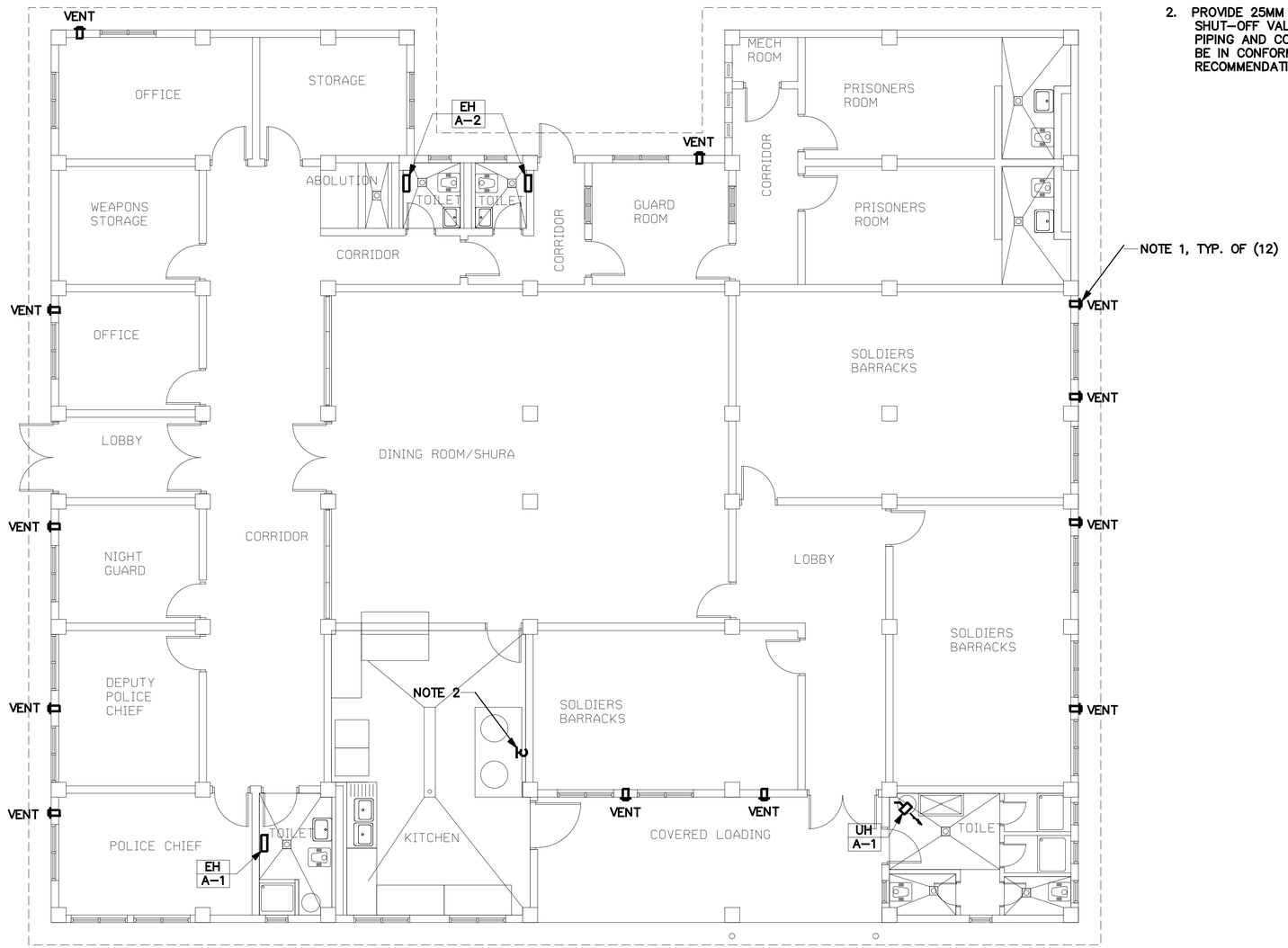

HEATING PLAN
SCALE= 1: 75

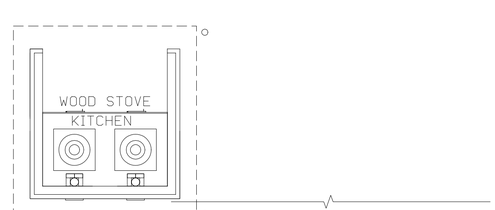

3 1.50 0 3 4.5
1:75
UNLESS OTHERWISE NOTED, LINEAR DIMENSIONS SHOWN ARE IN MILLIMETERS.

SYMBOL	DESCRIPTION	DATE	APR

DESIGNED BY: RMS
DATE: 29 OCTOBER 2007
DWN BY: JRP
SUBMITTED BY:
CHK BY: JLK
FILE NO.: AF0607A-MH02PN

US Army Corps of Engineers
Afghanistan Engineer District

AFGHANISTAN NATIONAL POLICE (ANP) DISTRICT HEADQUARTERS COMPOUNDS – 1 STORY HQ
VARIOUS LOCATIONS, AFGHANISTAN
1 STORY BUILDING
HEATING PLAN

SHEET REFERENCE NUMBER:
A
M-2

10/25/2007
S:\Engineering & Construction\Engineering\00 RFPs in-progress\ANP\ANP ON 1-Story Design\ANP Dist HQ 1Story Design Changes 26Oct07\Microstation Files\mech\AF0607A-MH02PN.dgn

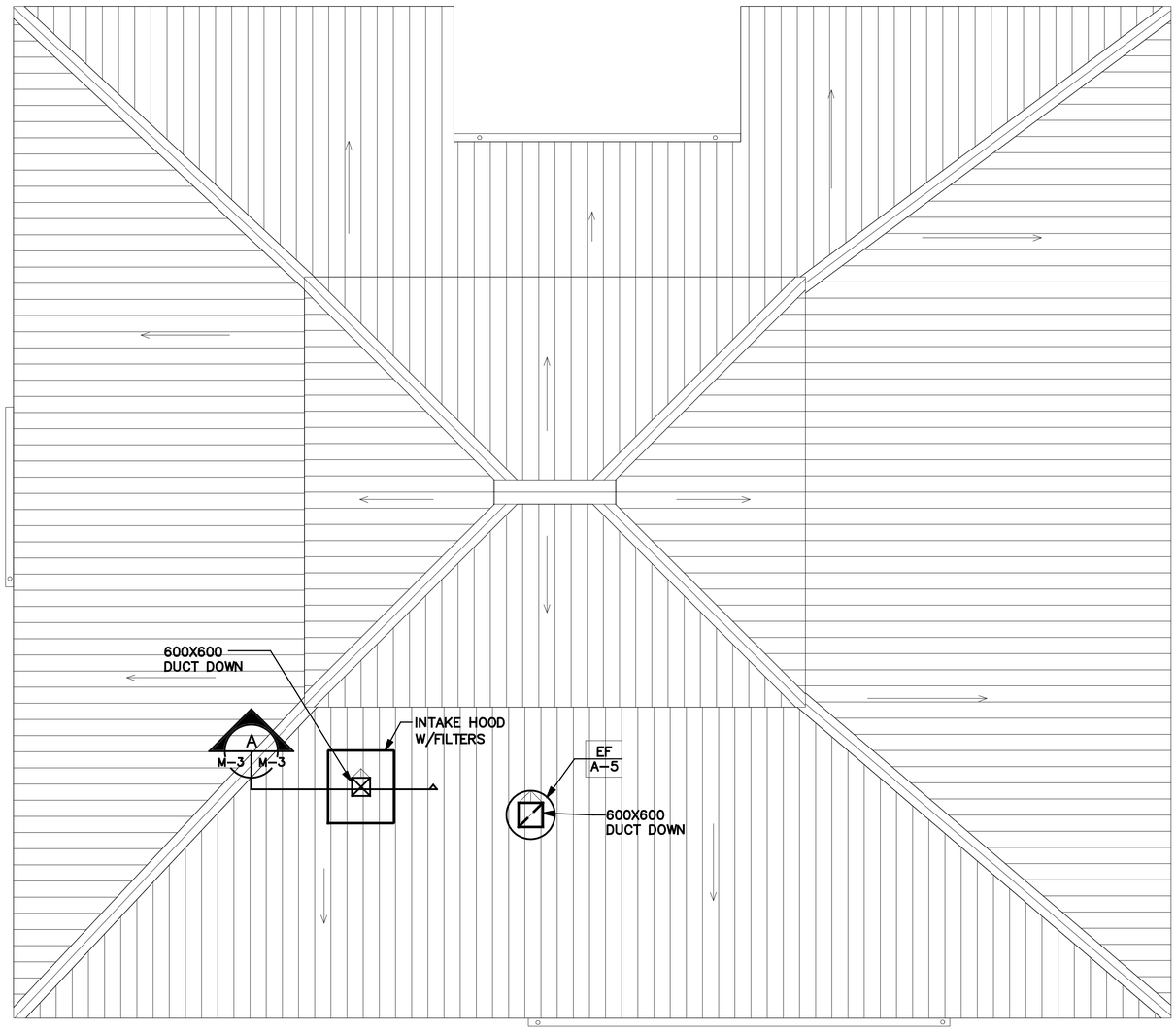

ROOF PLAN
SCALE= 1: 75

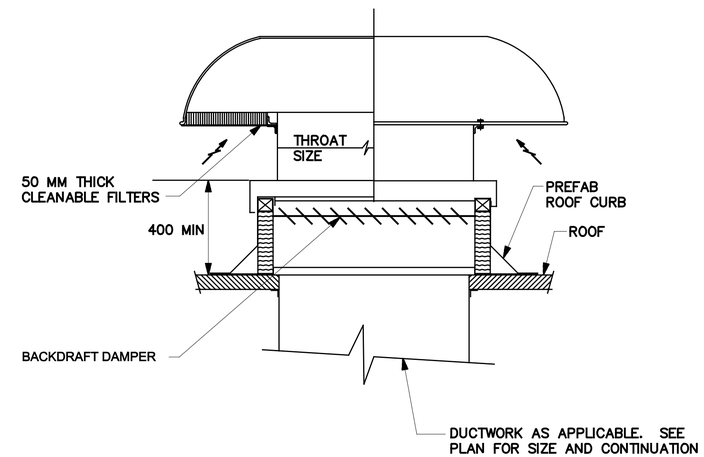

NOTE:
1. FILTER AREA SELECTION AT MAXIMUM FACE VELOCITY OF 300 FPM OR 1.52 MPS.

AIR INTAKE HOOD (A / M-3)
NOT TO SCALE

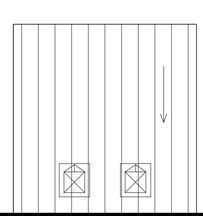

3 1.50 0 3 4.5
1:75
UNLESS OTHERWISE NOTED, LINEAR DIMENSIONS SHOWN ARE IN MILLIMETERS.

SYMBOL	DESCRIPTION	DATE	APR

DESIGNED BY: RMS
DWN BY: JLK
CHK BY: JLK
DATE: 29 OCTOBER 2007
SUBMITTED BY:
FILE NO.: AF0607A-MH03PN

US Army Corps of Engineers
Afghanistan Engineer District

AFGHANISTAN NATIONAL POLICE (ANP) DISTRICT HEADQUARTERS COMPOUNDS – 1 STORY HQ
VARIOUS LOCATIONS, AFGHANISTAN
1 STORY BUILDING
ROOF PLAN

SHEET REFERENCE NUMBER:
A
M-3

10/25/2007
S:\Engineering & Construction\Engineering\00_RFPs in-progress\ANP\ANP 0_1-Story Design\ANP Dist HQ 1Story Design Changes 26Oct07\Microstation Files\mech\AF0607A-MH03PN.dgn

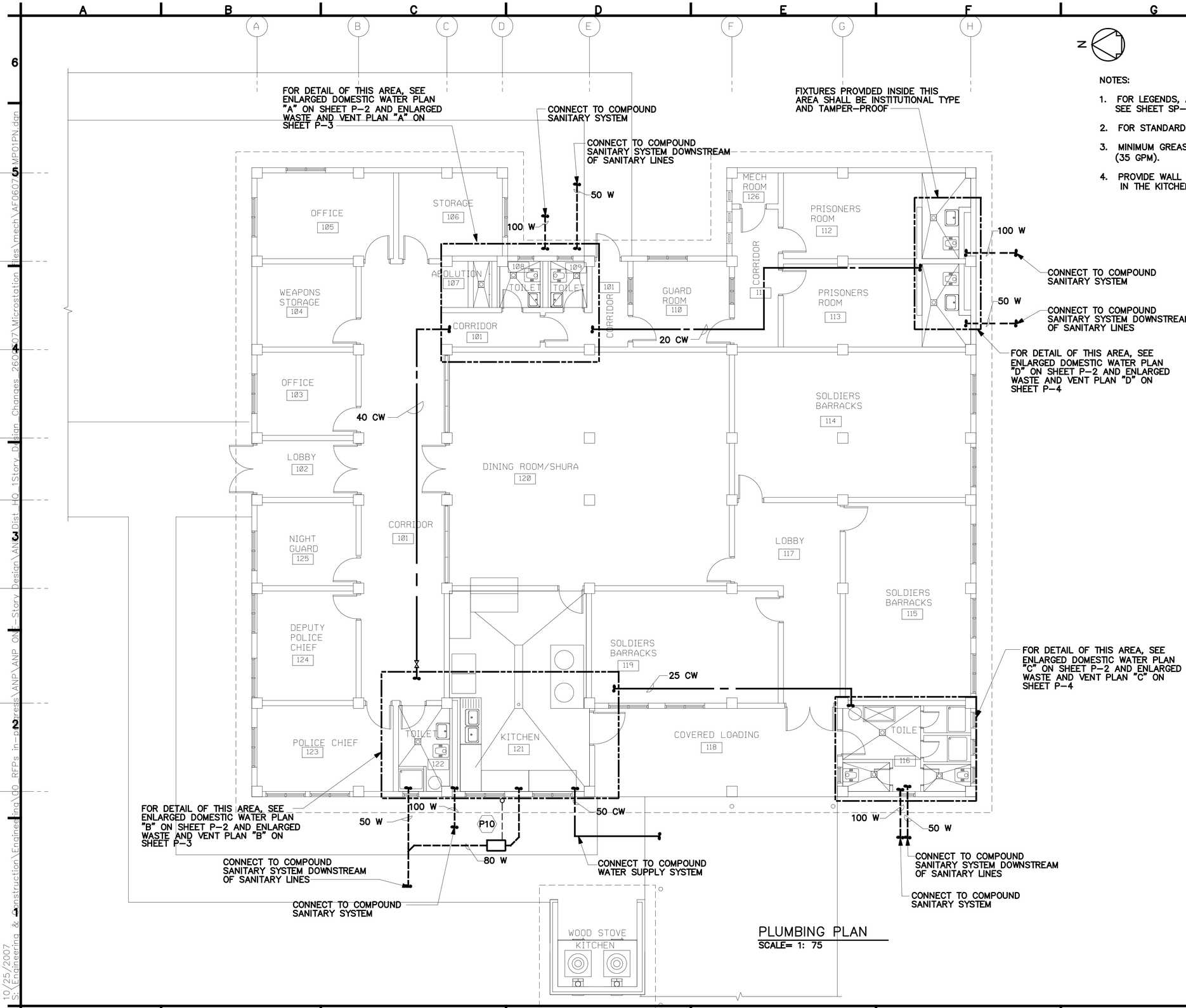

NOTES:

1. FOR LEGENDS, ABBREVIATIONS AND PLUMBING FIXTURE SCHEDULE SEE SHEET SP-1.
2. FOR STANDARD PLUMBING DETAILS SEE SHEET SP-2.
3. MINIMUM GREASE INTERCEPTOR FLOW RATE SHALL BE 135 LPM (35 GPM).
4. PROVIDE WALL MOUNTED, 15MM DIA. 12.5m LONG HOSE REEL IN THE KITCHEN.

PLUMBING PLAN
SCALE= 1: 75

3 1.50 0 3 4.5
1:75
UNLESS OTHERWISE NOTED, LINEAR DIMENSIONS SHOWN ARE IN MILLIMETERS.

SYMBOL	DESCRIPTION	DATE	APR

DESIGNED BY: RMS
DATE: 29 OCTOBER 2007
DWN BY: JLK
SUBMITTED BY:
CHK BY: JLK
FILE NO.: AF0607A-MP01PN

US Army Corps of Engineers
Afghanistan Engineer District

AFGHANISTAN NATIONAL POLICE (ANP) DISTRICT HEADQUARTERS COMPOUNDS – 1 STORY HQ
VARIOUS LOCATIONS, AFGHANISTAN
1 STORY BUILDING
PLUMBING PLAN

SHEET REFERENCE NUMBER:
A
P-1

10/25/2007
S:\Engineering & Construction\Engineering\00 RFPs in-progress\ANP\ANP 01-Story Design\AND Dist HQ 1Story Design Changes 26Oct07\Microstation files\mech\AF0607A-MP01PN.dgn

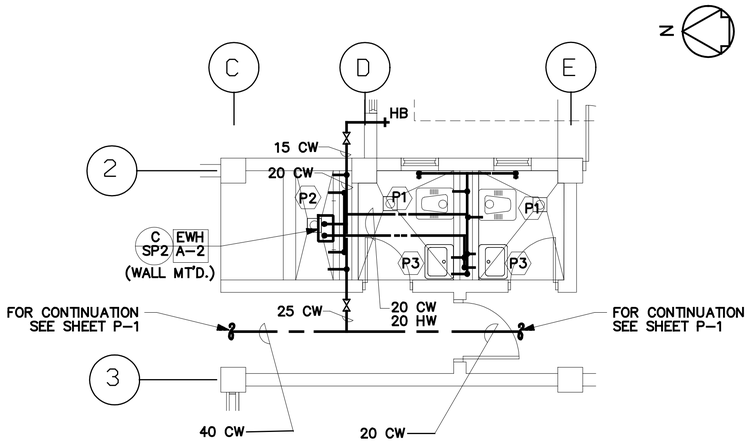

ENLARGED PLAN "A"– DOMESTIC WATER
SCALE= 1: 50

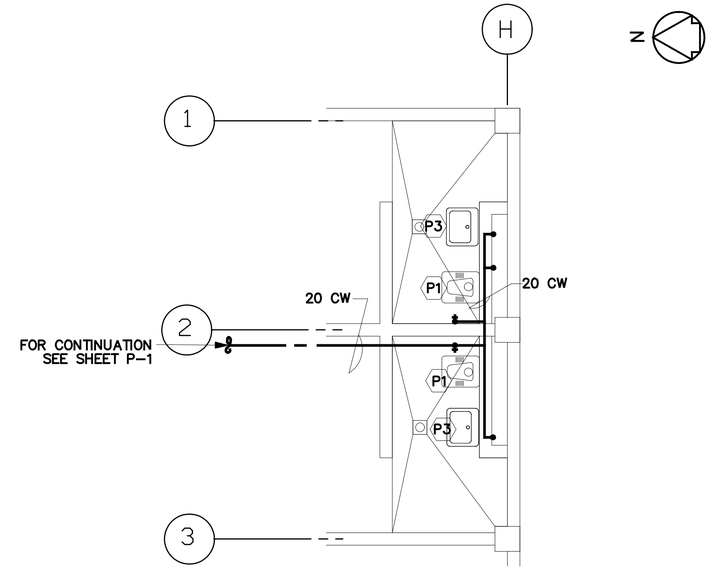

ENLARGED PLAN "D"– DOMESTIC WATER
SCALE= 1: 50

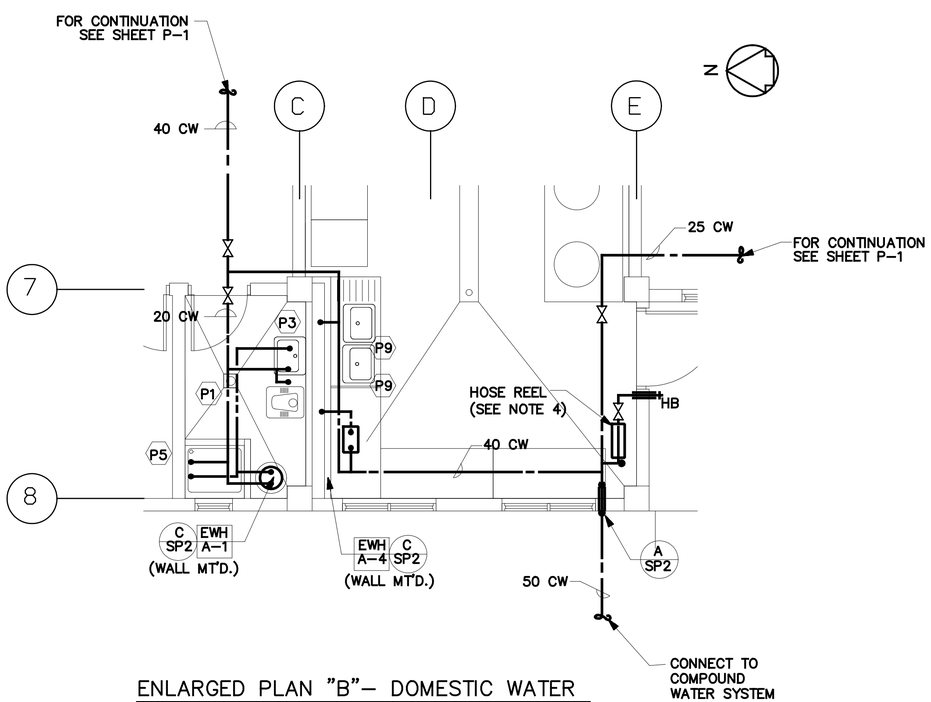

ENLARGED PLAN "B"– DOMESTIC WATER
SCALE= 1: 50

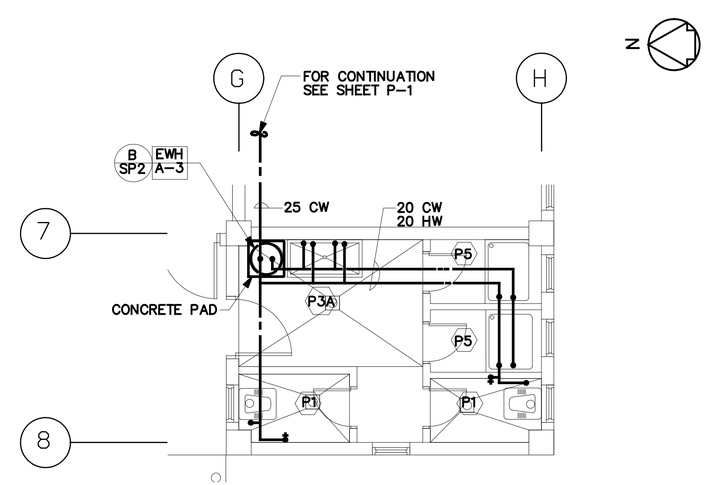

ENLARGED PLAN "C"– DOMESTIC WATER
SCALE= 1: 50

1 0 1 2 3 4
1:50

UNLESS OTHERWISE NOTED, LINEAR DIMENSIONS SHOWN ARE IN MILLIMETERS.

SYMBOL	DESCRIPTION	DATE	APR

DESIGNED BY: RMS
DATE: 29 OCTOBER 2007
DWN BY: JLK
SUBMITTED BY:
CHK BY: JLK
FILE NO.: AF0607A–MP02LS

US Army Corps of Engineers
Afghanistan Engineer District

AFGHANISTAN NATIONAL POLICE (ANP) DISTRICT HEADQUARTERS COMPOUNDS – 1 STORY HQ
VARIOUS LOCATIONS, AFGHANISTAN
1 STORY BUILDING
ENLARGED PLUMBING PLANS– DOMESTIC WATER

SHEET REFERENCE NUMBER:
A
P–2

10/25/2007
S:\Engineering & Construction\Engineering\00_RFPs in Progress\ANP\ANP 01_1-Story Design\ANP Dist HQ 1Story Design Changes 26Oct07\Microstation Files\mech\AF0607MP02LS.dgn

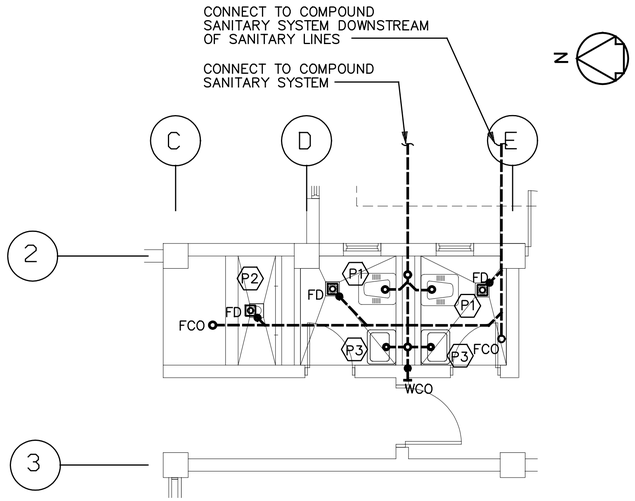

ENLARGED PLAN "A"- WASTE AND DRAINS

SCALE= 1: 50

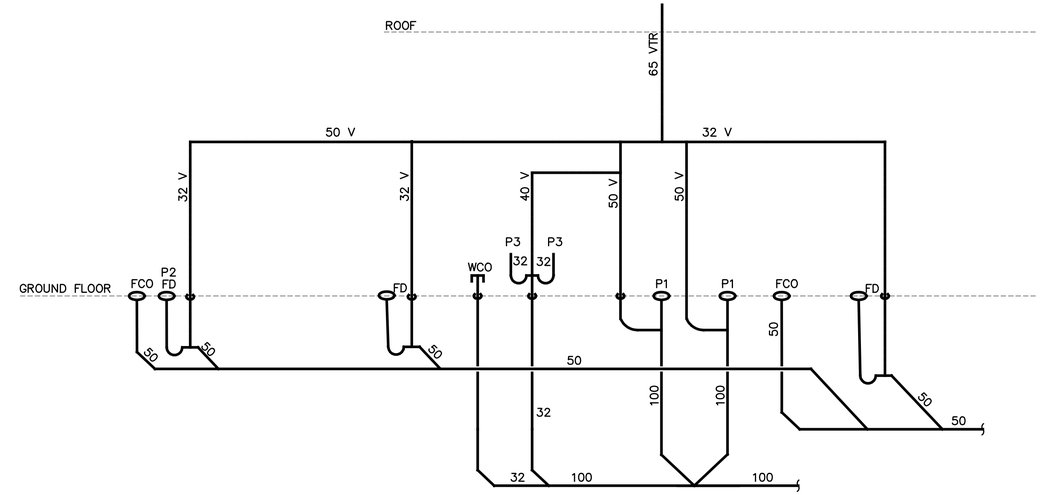

ENLARGED PLAN "A"- WASTE AND DRAIN PIPING SCHEMATIC

SCALE=NO SCALE

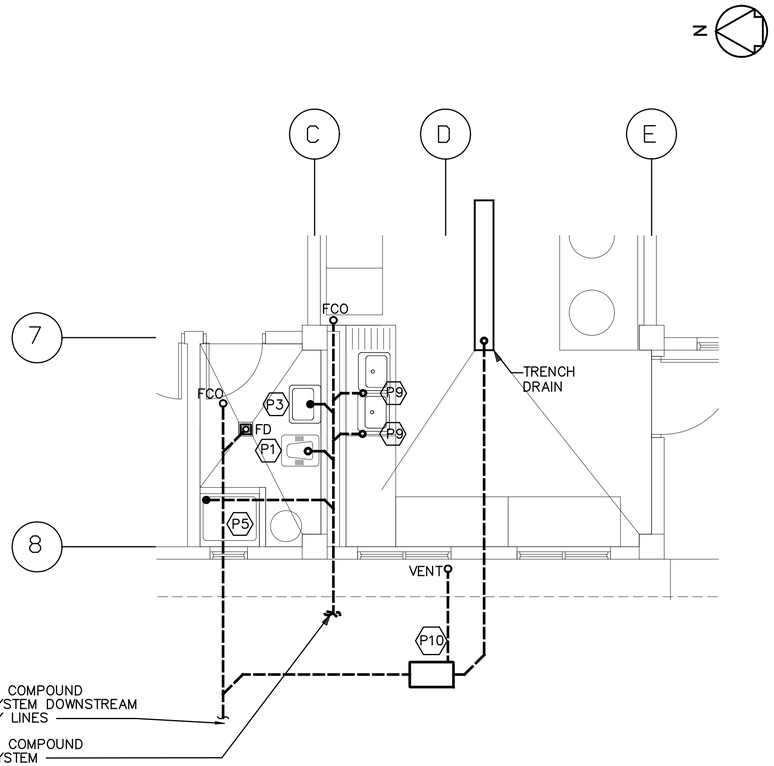

ENLARGED PLAN "B"- WASTE AND DRAINS

SCALE= 1: 50

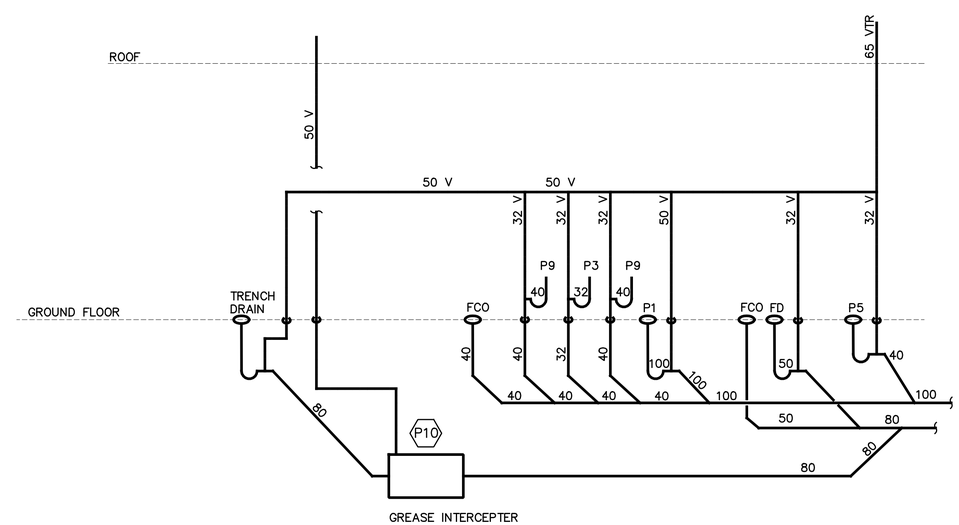

ENLARGED PLAN "B"- WASTE AND DRAIN PIPING SCHEMATIC

SCALE= NO SCALE

1 0 1 2 3 4
1:50

UNLESS OTHERWISE NOTED, LINEAR DIMENSIONS SHOWN ARE IN MILLIMETERS.

SYMBOL	DESCRIPTION	DATE	APR

DESIGNED BY: RMS
DATE: 29 OCTOBER 2007
DWN BY: JLK
SUBMITTED BY:
CHK BY: JLK
FILE NO.: AF0607A-MP03LS

US Army Corps of Engineers
Afghanistan Engineer District

AFGHANISTAN NATIONAL POLICE (ANP) DISTRICT HEADQUARTERS COMPOUNDS – 1 STORY HQ
VARIOUS LOCATIONS, AFGHANISTAN
1 STORY BUILDING
ENLARGED PLUMBING PLANS– WASTE AND DRAINS

SHEET REFERENCE NUMBER:
A
P–3

10/25/2007
S:\Engineering & Construction\Engineering\00_RFPs in Progress\ANP\ANP 01 1-Story Design\ANP Dist HQ 1Story Design Changes 26Oct07\Microstation Files\mech\AF0607MP03LS.dgn

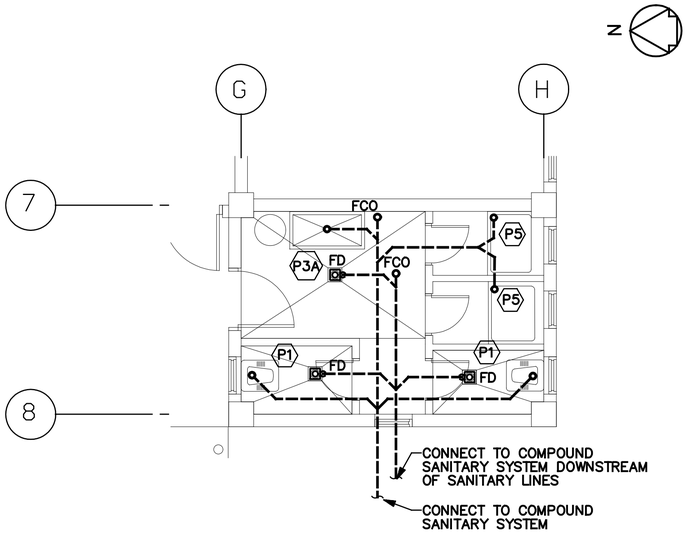

ENLARGED PLAN "C"- WASTE AND DRAINS
SCALE= 1: 50

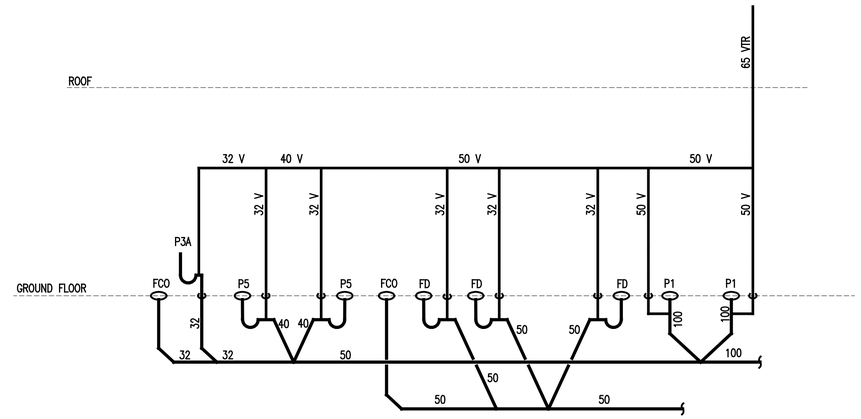

ENLARGED PLAN "C"- WASTE AND DRAIN PIPING SCHEMATIC
SCALE=NO SCALE

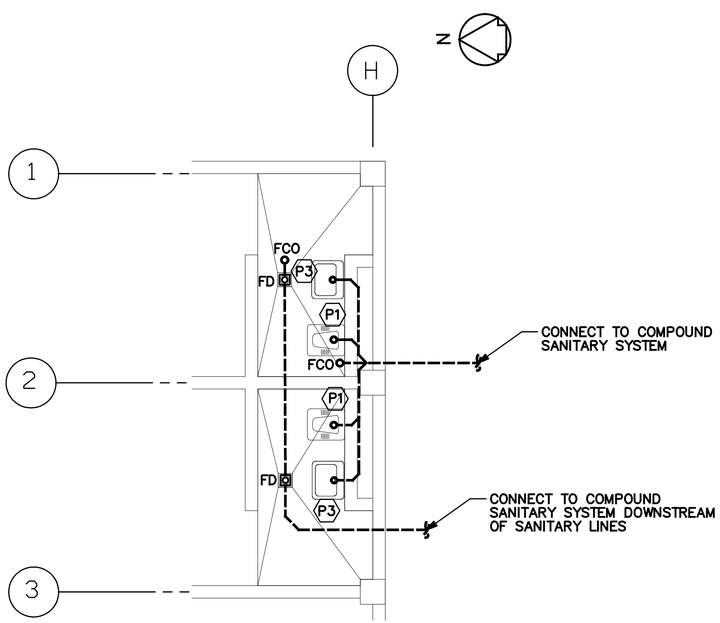

ENLARGED PLAN "D"- WASTE AND DRAINS
SCALE= 1: 50

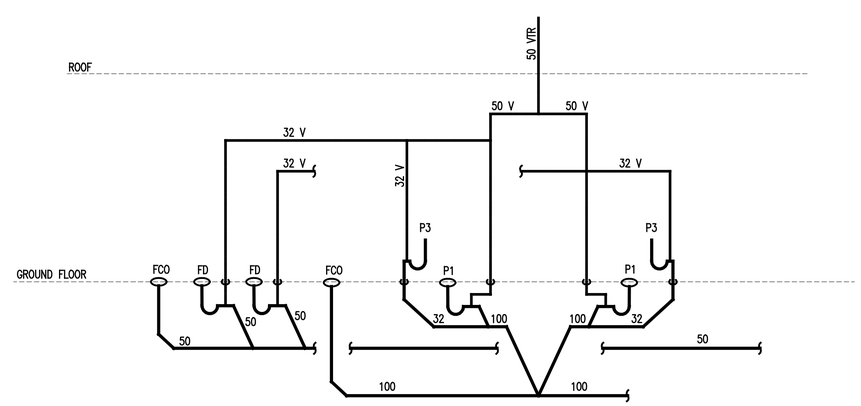

ENLARGED PLAN "D"- WASTE AND DRAIN PIPING SCHEMATIC
SCALE=NO SCALE

1 0 1 2 3 4
1:50

UNLESS OTHERWISE NOTED, LINEAR DIMENSIONS SHOWN ARE IN MILLIMETERS.

SYMBOL	DESCRIPTION	DATE	APR

DESIGNED BY: RMS
DWN BY: JMC
CHK BY: RMS
DATE: 29 OCTOBER 2007
SUBMITTED BY:
FILE NO.: AF0607A-MP04LS

US Army Corps of Engineers
Afghanistan Engineer District

AFGHANISTAN NATIONAL POLICE (ANP) DISTRICT HEADQUARTERS COMPOUNDS – 1 STORY HQ
VARIOUS LOCATIONS, AFGHANISTAN
1 STORY BUILDING
ENLARGED PLUMBING PLANS– WASTE AND DRAINS

SHEET REFERENCE NUMBER:
A
P–4

10/25/2007
S:\Engineering & Construction\Engineering\00_RFPs in progress\ANP\ANP 01 Story Design\ANP Dist HQ 1Story Design Changes 2607\Microstation files\mech\AF0607A-MP04LS.dgn

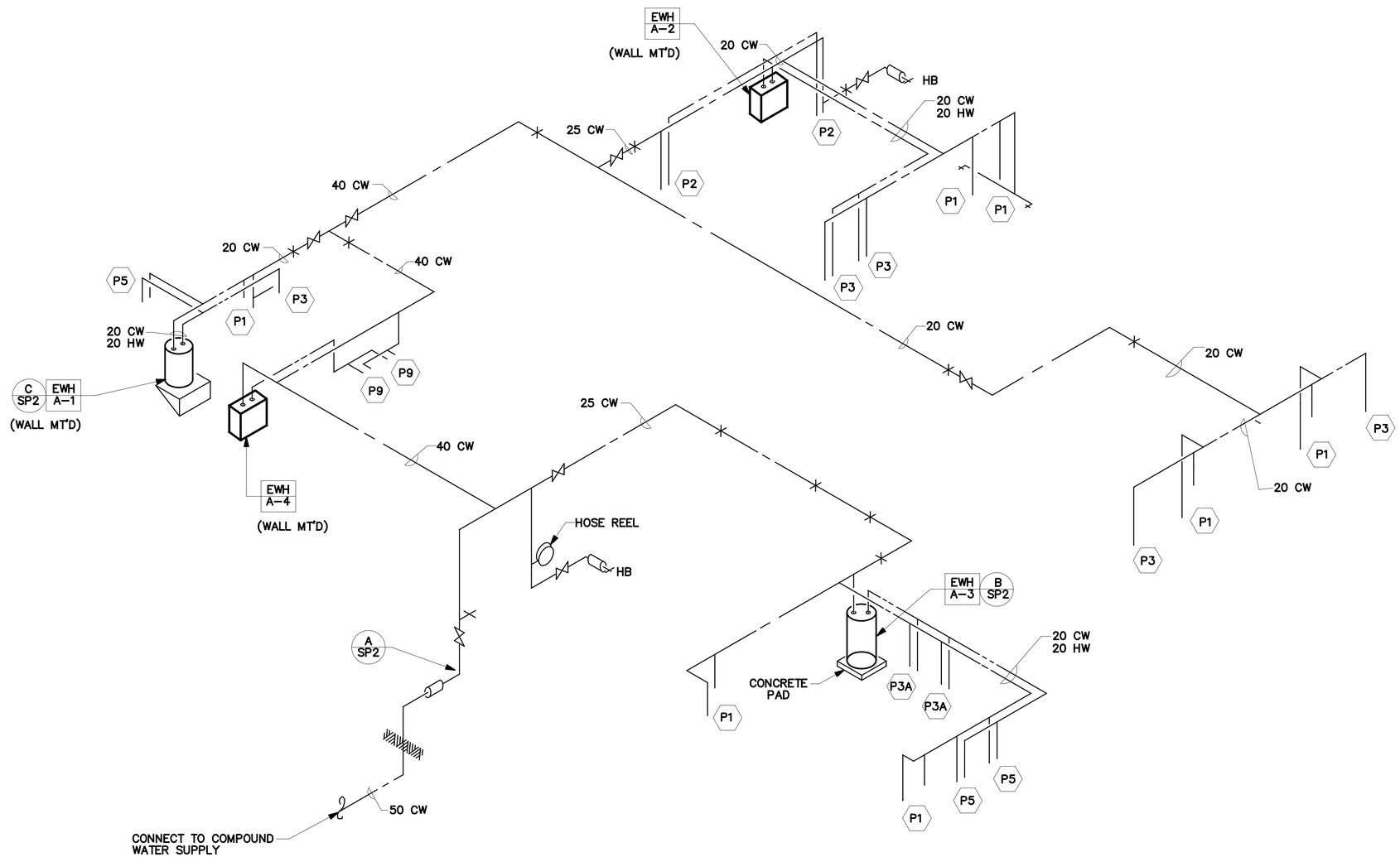

DOMESTIC WATER RISER DIAGRAM
NOT TO SCALE

SYMBOL	DESCRIPTION	DATE	APR

DESIGNED BY: RMS
DATE: 29 OCTOBER 2007
DWN BY: JLK
SUBMITTED BY:
CHK BY: JLK
FILE NO.: AF0607A–MP05DI

US Army Corps of Engineers
Afghanistan Engineer District

AFGHANISTAN NATIONAL POLICE (ANP) DISTRICT HEADQUARTERS COMPOUNDS – 1 STORY HQ
VARIOUS LOCATIONS, AFGHANISTAN
1 STORY BUILDING
DOMESTIC WATER RISER DIAGRAM

SHEET REFERENCE NUMBER:
A
P–5

10/25/2007
S:\Engineering & Construction\Engineering\00 RFPs in-progress\ANP\ANP ON 1-Story Design\ANP Dist HQ 1Story Design Changes 2607\Microstation Files\mech\AF0607A-MP05DI.dgn

EWH A–X ELECTRIC WATER HEATER SCHEDULE

UNIT NUMBER	LOCATION (ROOM NO.)	TYPE	STORAGE CAPACITY (LITERS)	MINIMUM RECOVERY RATE (LITERS/HOUR) @ 55.5 C RISE	NUMBER OF ELEMENTS	ELECTRICAL REQUIREMENTS				REMARKS
						KW INPUT	VOLTS	PH	HZ	
A–1	OFFICERS TOILET	STORAGE TANK	75	39	1	2.5	220	1	50	WALL MOUNTED
A–2	WOMENS TOILET	TANKLESS	N/A	N/A	2	9.0	220	1	50	WALL MOUNTED
A–3	BARRACKS TOILET	STORAGE TANK	200	143	2	9.0	380	3	50	FLOOR MOUNTED
A–4	KITCHEN	TANKLESS	N/A	N/A	2	12.0	220	1	50	WALL MOUNTED

SYMBOL	DESCRIPTION	DATE	APR

DESIGNED BY: RMS
DATE: 29 OCTOBER 2007
DWN BY: JMC
SUBMITTED BY:
CHK BY: RMS
FILE NO.: AF0607A–MP06SC

US Army Corps of Engineers
Afghanistan Engineer District

AFGHANISTAN NATIONAL POLICE (ANP) DISTRICT HEADQUARTERS COMPOUNDS – 1 STORY HQ
VARIOUS LOCATIONS, AFGHANISTAN
1 STORY BUILDING
PLUMBING SCHEDULES

SHEET REFERENCE NUMBER:
A
P–6

10/25/2007
S:\Engineering & Construction\Engineering\00_RFPs in-process\ANP\ANP_ON_1-Story Design\ANP Dist HQ 1Story Design Changes 26Oct07\Microstation Files\mech\AF0607A_MP06SC.dgn

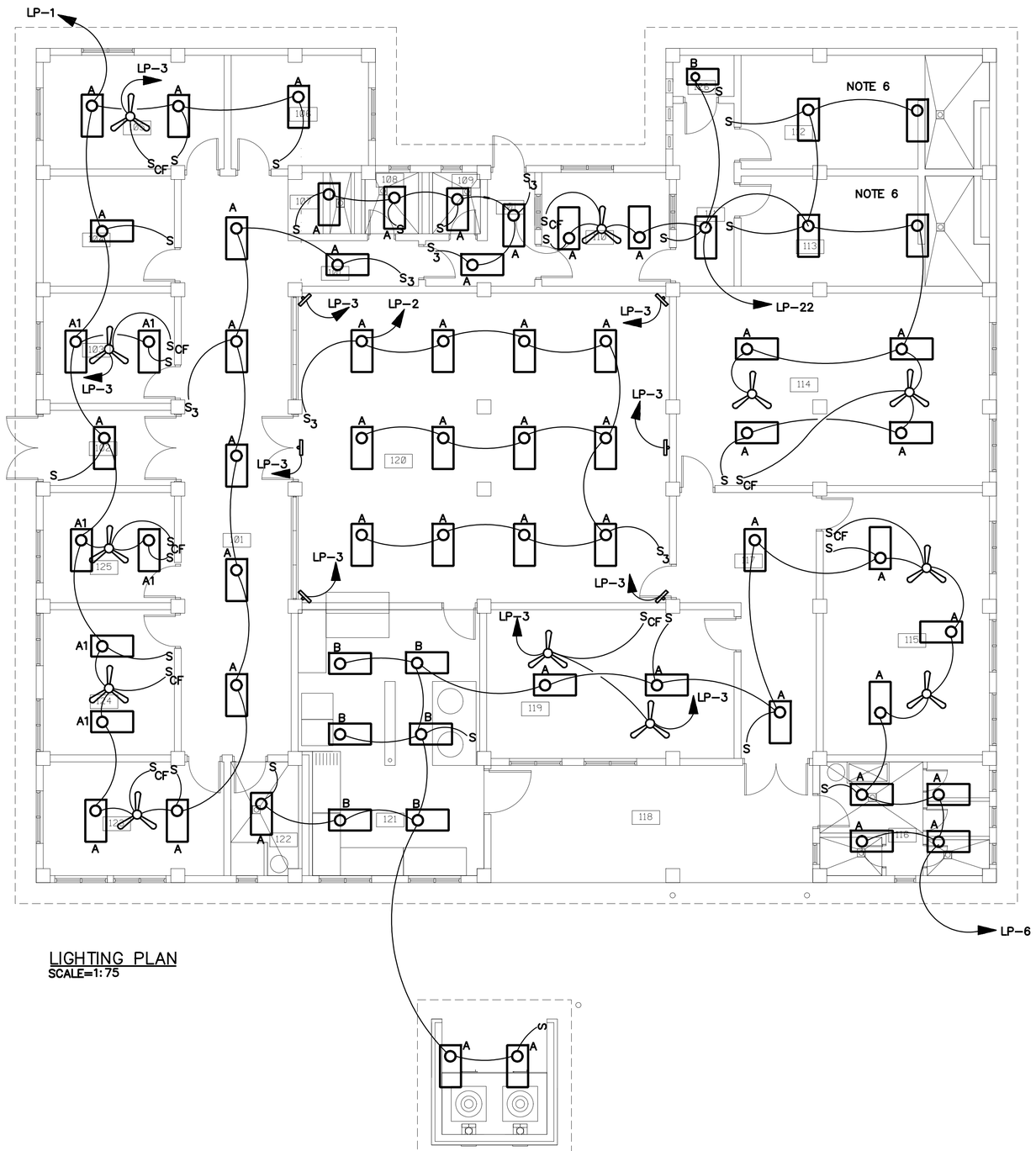

LIGHTING PLAN
SCALE=1:75

NOTES:

1. FOR LEGEND AND ABBREVIATIONS SEE DRAWING SE-1.
2. COORDINATE LOCATION OF ALL ELECTRICAL FIXTURES AND EQUIPMENT WITH ALL OTHER TRADES.
3. FOR ONE LINE DIAGRAM SEE DRAWING D/E- 1, POWER PLANT.
4. ALL WIRING SHALL BE SURFACE MOUNTED IN METAL CONDUIT.
5. FOR EXACT LOCATION OF MECHANICAL EQUIPMENT SEE MECHANICAL DRAWINGS.
6. ALL LIGHT FIXTURES IN JAIL CELLS SHALL BE TWO LAMP FLUORESCENT TYPE FIXTURES SUITABLE FOR VANDAL RESISTANCE/DETENTION CENTER. LIGHT FIXTURES SHALL WITHSTAND THE PHYSICAL ABUSE AND THE INTENT-TO-DESTROY TYPE ABUSE.
7. COORDINATE LOCATION OF ALL LIGHT FIXTURES WITH CEILING FANS.

3 1.50 0 3 4.5
1:75

UNLESS OTHERWISE NOTED, LINEAR DIMENSIONS SHOWN ARE IN MILLIMETERS.

SYMBOL	DESCRIPTION	DATE	APR

DESIGNED BY: MM
DATE: 29 OCTOBER 2007
DWN BY: JLK
SUBMITTED BY:
CHK BY: JLK
FILE NO.: AF0607A-EL01PN

US Army Corps of Engineers
Afghanistan Engineer District

AFGHANISTAN NATIONAL POLICE (ANP) DISTRICT HEADQUARTERS COMPOUNDS – 1 STORY HQ
VARIOUS LOCATIONS, AFGHANISTAN
1 STORY BUILDING
LIGHTING PLAN

SHEET REFERENCE NUMBER:
A
E-1

10/27/2007
S:\Engineering & Construction\Engineering\00_RFPs in-process\ANP\ANP ON 1-Story Design\ANP Dist HQ 1Story Design Changes 26Oct07\Microstation Files\elec\AF0607A-EL01PN.dgn

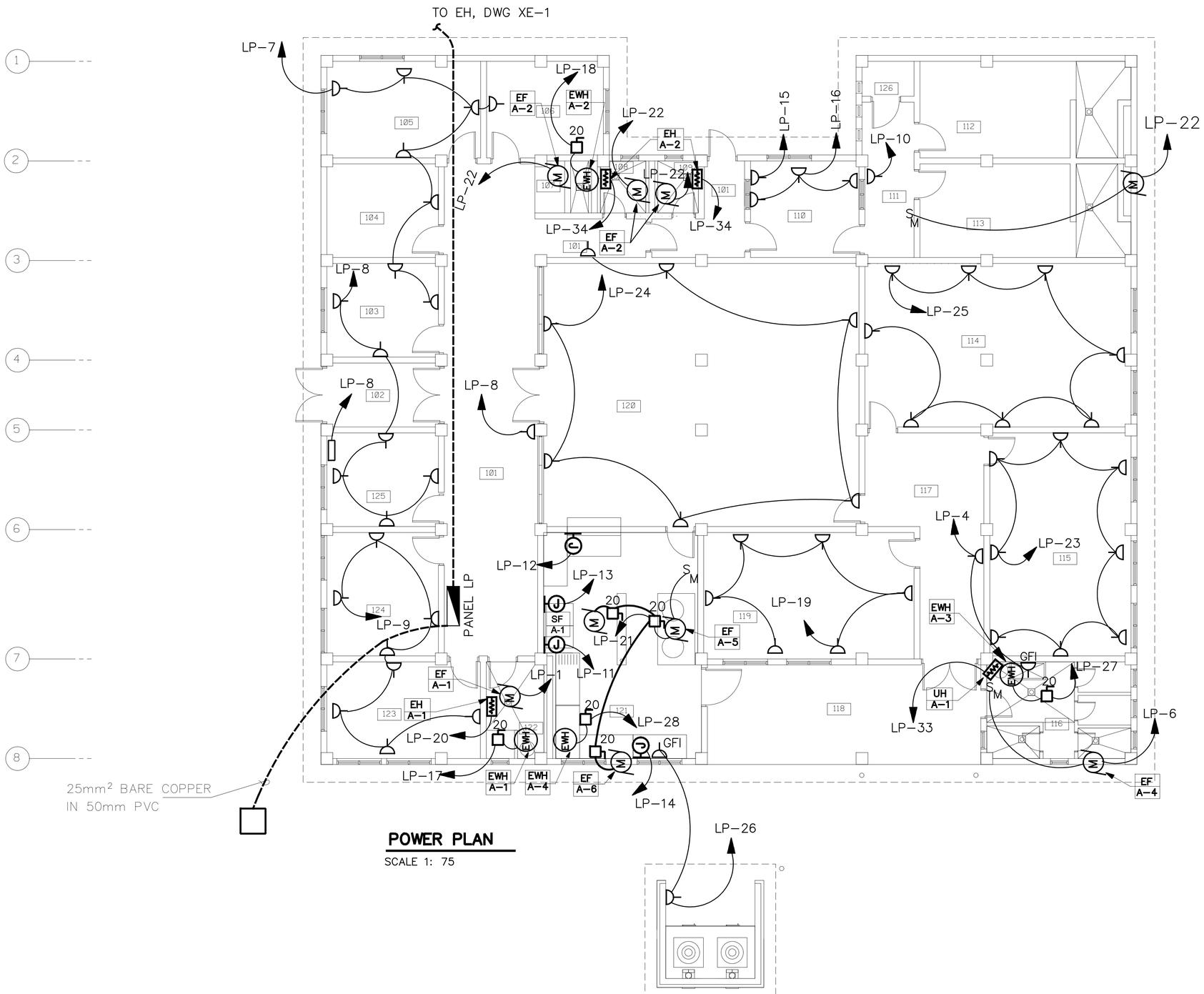

POWER PLAN

SCALE 1: 75

NOTES:

1. FOR LEGEND AND ABBREVIATIONS SEE DRAWING SE-1.
2. COORDINATE LOCATION OF ALL ELECTRICAL FIXTURES AND EQUIPMENT WITH ALL OTHER TRADES.
3. FOR ONE LINE DIAGRAM SEE DRAWING D/E-1, POWER PLANT.
4. ALL WIRING SHALL BE SURFACE MOUNTED IN METAL CONDUIT.
5. FOR EXACT LOCATION OF MECHANICAL EQUIPMENT SEE MECHANICAL DRAWINGS.
6. EXHAUST FAN EF-A-1 AND EF-A-2 SHALL BE CONTROLLED BY THE LIGHT SWITCH IN THEIR RESPECTIVE ROOM.
7. EXHAUST FAN EF-A-3, EF-A-4, AND EF-A-5 SHALL BE CONTROLLED BY A MANUAL MOTOR STARTER FROM THE LOCATION AS SHOWN ON THIS DRAWING.
8. EXHAUST FAN EF-A-6 SHALL BE CONTROLLED BY A THERMOSTAT. REFER TO MECHANICAL DRAWING FOR LOCATION OF THE THERMOSTAT.

3 1.50 0 3 4.5
1:75

UNLESS OTHERWISE NOTED, LINEAR DIMENSIONS SHOWN ARE IN MILLIMETERS.

SYMBOL	DESCRIPTION	DATE	APR

DESIGNED BY: MM
DATE: 29 OCTOBER 2007
DWN BY: JLK
SUBMITTED BY:
CHK BY: JLK
FILE NO.: AF0607A-EP02PN

US Army Corps of Engineers
Afghanistan Engineer District

AFGHANISTAN NATIONAL POLICE (ANP) DISTRICT HEADQUARTERS COMPOUNDS – 1 STORY HQ
VARIOUS LOCATIONS, AFGHANISTAN
1 STORY BUILDING
POWER PLAN

SHEET REFERENCE NUMBER:
A
E-2

10/26/2007
S:\Engineering & Construction\Engineering\00_RFPs in-progress\ANP\ANP 01_Story Design\AN\Dist_HQ_1Story_Design_Changes_26Oct07\Microstation Files\elec\AF0607A-EP02PN.dgn

PANELBOARD LP FLUSH MOUNTED MINIMUM 22,000 ASYM. A.I.C. MIN.

_____ AMP. MAIN LUGS (OR) 150 AMP. MAIN BREAKER W/ 150 AMP. TRIP

CIRCUIT BREAKER TYPE 380/220 VOLTS 3 PHASE 4 WIRE 150 AMP. BUS 50 HZ

CKT. NO.	TRIP AMPS	NO. POLES	WIRE mm2	GND mm2	CONDUIT mm	LOAD SERVED	LOAD–V.A. A0	LOAD–V.A. B0	LOAD–V.A. C0	LOAD–V.A. A0	LOAD–V.A. B0	LOAD–V.A. C0	LOAD SERVED	CONDUIT mm	GND mm2	WIRE mm2	NO. POLES	TRIP AMPS	CKT. NO.
1	20	1	4	4	20	LIGHTING,FANS, EF–A–1	3230			1440			LIGHTING	20	4	4	1	20	2
3	20	1	4	4	20	FANS		2000			360		RECEPTACLES	20	4	4	1	20	4
5	20	1				SPARE						3415	LIGHTING, FANS,EF–A–4	20	4	4	1	20	6
7	20	1	4	4	20	RECEPTACLES	1440			1260			RECEPTACLES	20	4	4	1	20	8
9	20	1	4	4	20	RECEPTACLES		1440			180		RECEPTACLE	20	4	4	1	20	10
11	20	1	4	4	20	JB FOR REFRIGERATOR/FREEZER			2000			2000	JB FOR REFRIGERATOR/FREEZER	20	4	4	1	20	12
13	20	1	4	4	20	JB FOR REFRIGERATOR/FREEZER	2000			2000			JB FOR REFRIGERATOR/FREEZER	20	4	4	1	20	14
15	20	1	4	4	20	RECEPTACLES		500			540		RECEPTACLES	20	4	4	1	20	16
17	20	1	4	4	20	ELECTRIC WATER HEATER A–1			2500			9000	ELECTRIC WATER HEATER A–2	20	6	10	1	50	18
19	20	1	4	4	20	RECEPTACLES	1080			1550			EH–A–1	20	4	4	1	20	20
21	20	1	4	4	20	EXHAUST FAN EF–A–5, A–6		1585			2800		LIGHTING,FANS,EF–A–2,EF–A–3	20	4	4	1	20	22
23	20	1	4	4	20	RECEPTACLES			1440			1260	RECEPTACLES	20	4	4	1	20	24
25	20	1	4	4	20	RECEPTACLES	1440			720			RECEPTACLES	20	4	4	1	20	26
27	20	3	4	4	20	EWH–A–3		3000			12000		ELECTRIC WATER HEATER A–4	20	6	16	1	70	28
29	↓	↓	↓	↓	↓	↓			3000				SPARE				1	20	30
31	↓	↓	↓	↓	↓	↓	3000						SPARE				1	20	32
33	20	1	4	4	20	UH–A–1		3000			2080		EH–A–2	20	4	4	1	20	34
35	20	1				SPARE							SPARE				1	20	36
37	20	1				SPARE							SPARE				1	20	38
39	20	1				SPARE							SPACE						40
41						SPACE							SPACE						42
							12190	11525	8940	6970	17960	15675							

TOTAL CONN. LOAD 73.26 KVA. 80 % DEMAND = ESTIMATED DEMAND LOAD: 58.61 kVA

TOTAL CONN. LOAD PER PHASE (KVA): A0 19.16 B0 29.49 C0 24.62

SUPPLIED FROM POWER PLANT SWITCHBOARD

NOTES:

1. FOR LEGEND AND ABBREVIATIONS SEE DRAWING SE–1.
2. CONTRACTOR SHALL CONFIRM THAT ALL CIRCUIT RATINGS ARE BASED ON THE ACTUAL NAMEPLATE OF THE SUPPLIED EQUIPMENT.

UNLESS OTHERWISE NOTED, LINEAR DIMENSIONS SHOWN ARE IN MILLIMETERS.

SYMBOL	DESCRIPTION	DATE	APR

DESIGNED BY: mm | DATE: 29 OCTOBER 2007
DWN BY: JLK | SUBMITTED BY:
CHK BY: JLK | FILE NO.: AF0607A–EL04SC

US Army Corps of Engineers
Afghanistan Engineer District

AFGHANISTAN NATIONAL POLICE (ANP) DISTRICT HEADQUARTERS COMPOUNDS – 1 STORY HQ
VARIOUS LOCATIONS, AFGHANISTAN
1 STORY BUILDING
PANEL SCHEDULE

SHEET REFERENCE NUMBER:
A
E–3

10/27/2007
S:\Engineering & Construction\Engineering\00_RFPs in-progress\ANP\ANP 01–Story Design\ANP Dist HQ 1Story Design Changes 26Oct07\Microstation Files\elec\AF0607A–EL03SC.dgn

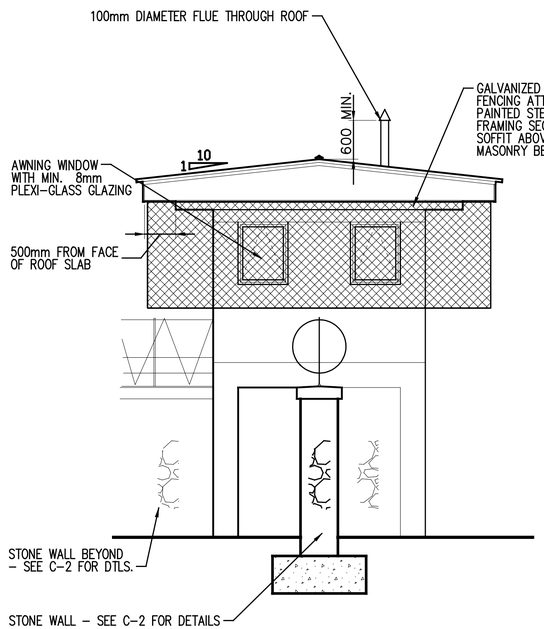

3 A-1 A-1 ELEVATION
SCALE= 1:50

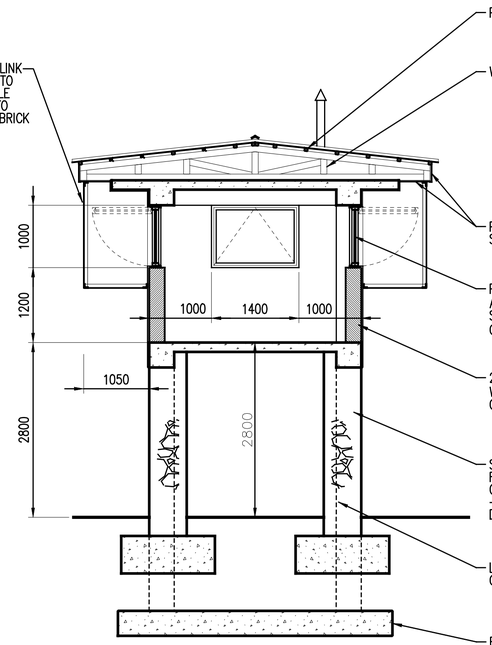

2 A-1 A-1 SECTION
SCALE= 1:50

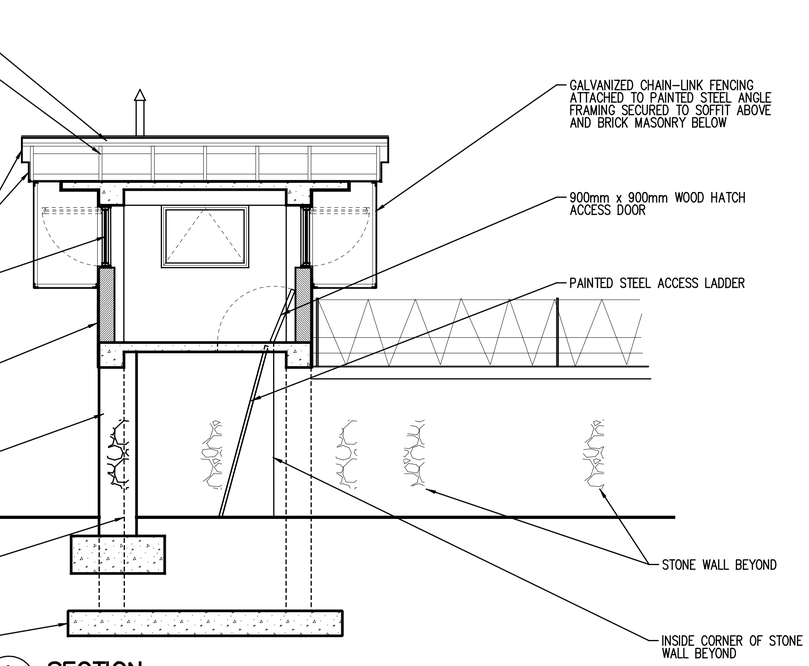

1 A-1 A-1 SECTION
SCALE= 1:50

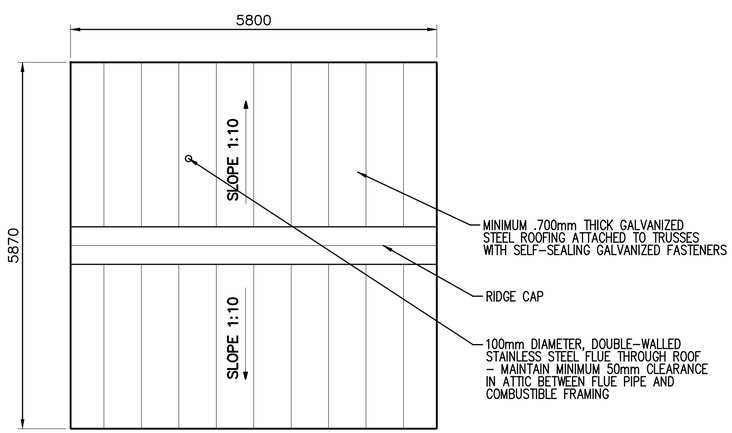

ROOF PLAN
SCALE= 1:50

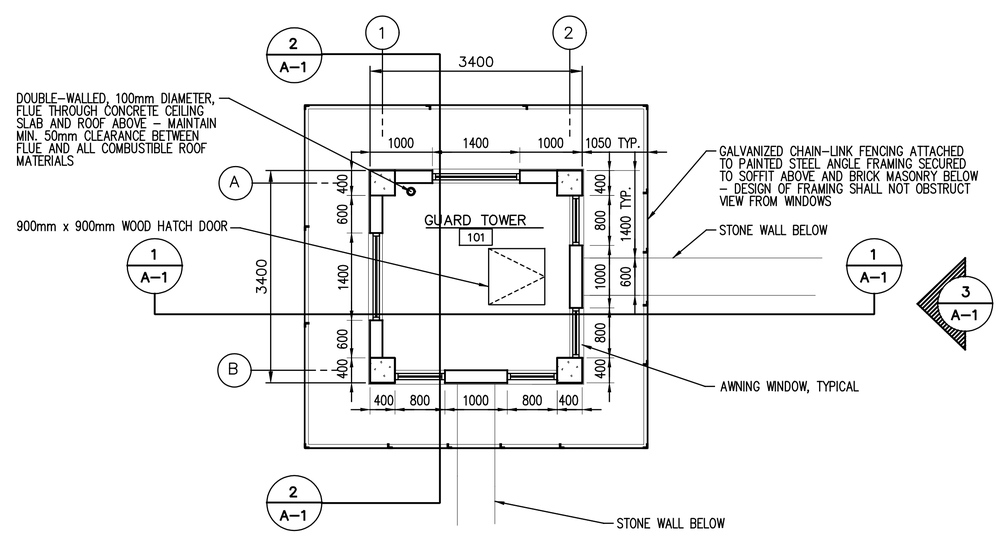

FIRST FLOOR PLAN
SCALE= 1:50

UNLESS OTHERWISE NOTED, LINEAR DIMENSIONS SHOWN ARE IN MILLIMETERS.

SYMBOL	DESCRIPTION	DATE	APR

DESIGNED BY: JLK
DATE: 29 OCTOBER 2007
DWN BY: JLK
SUBMITTED BY:
CHK BY: JLK
FILE NO.: AF0607B-AR01PN

US Army Corps of Engineers
Afghanistan Engineer District

AFGHANISTAN NATIONAL POLICE (ANP) DISTRICT HEADQUARTERS COMPOUNDS – 1 STORY HQ
VARIOUS LOCATIONS, AFGHANISTAN
GUARD TOWER
FLOOR PLAN, SECTION
ELEVATION AND ROOF PLAN

SHEET REFERENCE NUMBER:
B
A–1

10/27/2007
S:\Engineering & Construction\Engineering\00 RFPs in-progress\ANP\ANP ON 1-Story Design\ANP Dist HQ 1Story Design Changes 26Oct07\Microstation Files\Arch\AF0607B-AR01PN.dgn

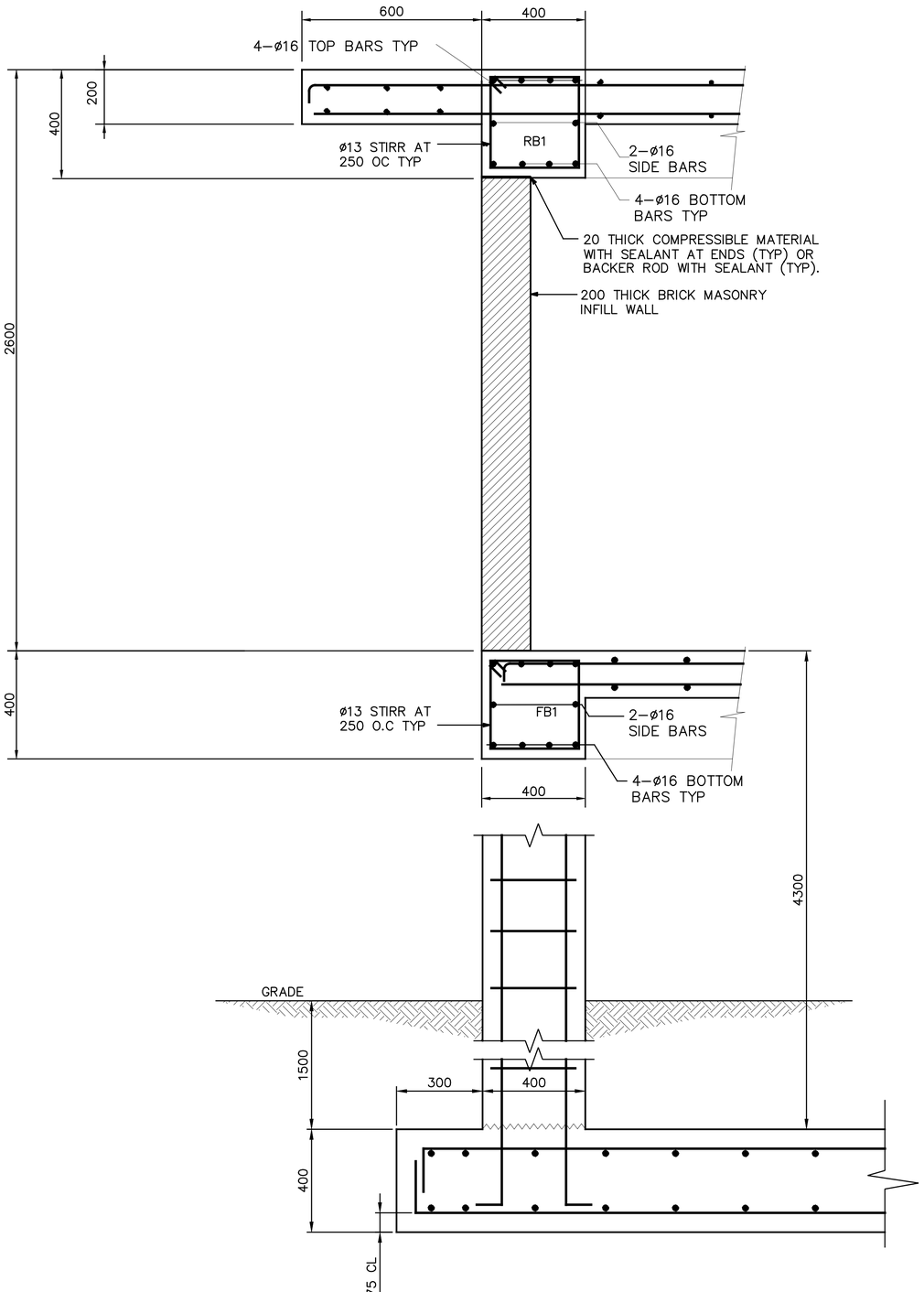

TYPICAL SECTION (A–A, S–1 | S–1)
SCALE=NTS

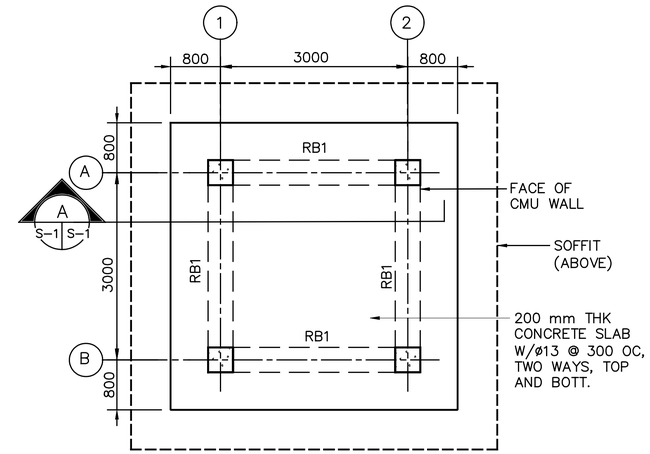

ROOF FRAMING PLAN
SCALE= 1:50

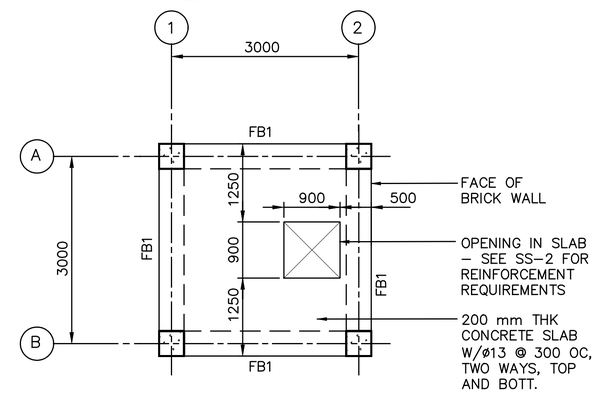

FIRST FLOOR PLAN
SCALE= 1:50

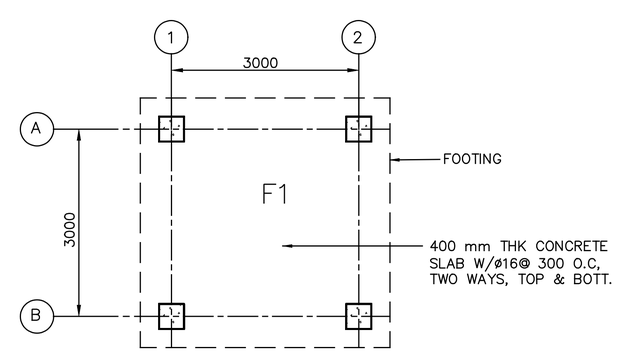

FOUNDATION AND SLAB PLAN
SCALE= 1:50

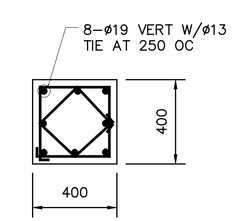

TYP COLUMN
REINFORCING DETAIL

1 0 1 2 3 4
1:50

UNLESS OTHERWISE NOTED, LINEAR DIMENSIONS SHOWN ARE IN MILLIMETERS.

GENERAL NOTES

1. DESIGN LOADS (SERVICE)

   LIVE LOADS:
   ROOF: 1.0 KPA (20 PSF)
   OTHERS: 4.8 KPA (100 PSF)
   8.9 KN (2.0 K)
   CONCENTRATED LOAD

   WIND LOADS PER IBC–2003:
   USING A "3–SECOND" WIND VELOCITY OF 125 KPH
   EXPOSURE C AND IMPORTANCE FACTOR I=1.0

   EARTHQUAKE LOADS PER IBC–2003:
   USING A SEISMICITY: Ss=1.65g AND S_1 =0.75g

2. MATERIALS:

   CONCRETE: 28 MPa (4 KSI)
   CYLINDER STRENGTH AT 28 DAYS

   REINFORCING: ASTM A615 GRADE 60 (60 KSI)

3. WORK THESE STRUCTURAL DRAWINGS WITH THE STANDARD–DETAILS DRAWINGS.

4. A RELATIVE (DATUM) FINISH FLOOR ELEVATION EQUAL TO 0.00M IS USED AS REFERENCE ELEVATION FOR ALL STRUCTURAL DRAWINGS. COORDINATE WITH SITE SPECIFIC GRADING PLAN TO BE PROVIDED BY CONTRACTOR.

5. FOUNDATIONS ARE DESIGNED USING AN ALLOWABLE BEARING PRESSURE OF 0.75 KG/SQ. CM (1500 PSF), AND BOTTOM OF FOOTINGS ARE PLACED AS SHOWN ON DRAWINGS. GEOTECHNICAL INVESTIGATION SHALL CONFIRM BEARING CAPACITY TO BE NO LESS THAN 0.75 KG/SQ CM. IF GEOTECHNICAL INVESTIGATION SHOWS LESS THAN 0.75 KG/SQ CM THE CONTRACTOR SHALL REDESIGN FOOTINGS BASED ON THE GEOTECHNICAL INVESTIGATION. SEE SPECIFICATION 01015 PARAGRAPH, GEOTECHNICAL, FOUNDATION AND SURVEY.

6. FOR BUILDING NORTH ORIENTATION SEE SHEET C–1.

SYMBOL	DESCRIPTION	DATE	APR

DESIGNED BY: JK
DWN BY: RG
CHK BY: JK
DATE: 29 OCTOBER 2007
SUBMITTED BY:
FILE NO.: AF0607B–SB01PN

US Army Corps of Engineers
Afghanistan Engineer District

AFGHANISTAN NATIONAL POLICE (ANP) DISTRICT HEADQUARTERS COMPOUNDS – 1 STORY HQ
VARIOUS LOCATIONS, AFGHANISTAN
GUARD TOWER
FOUNDATION AND SLAB PLAN
ROOF FRAMING PLAN

SHEET REFERENCE NUMBER:
B
S–1

10/27/2007
S:\Engineering & Construction\Engineering\00_RFPs in-progress\ANP\ANP ONE-Story Design\ANP Dist_HQ_1Story_Design_Changes_2600\07\Microstation Files\struct\AF0607B_SB01PN.dgn

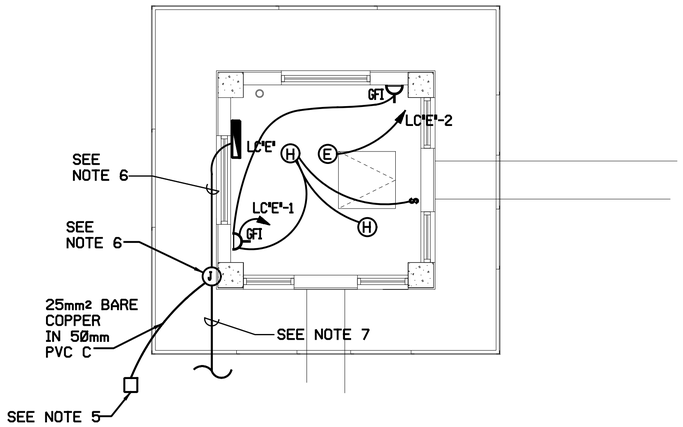

LIGHTING & POWER

NOT TO SCALE

LOAD CENTER "E" GUARD TOWER #1, 2, 3, & 4

40 AMP MAIN CIRCUIT BREAKER, 220V, 1 PH, 2W, 50 HZ, 100A BUS, 10000 AIC

CKT. NO.	TRIP AMPS	NO. POLES	WIRE MM^2	GND MM^2	CONDUIT MM	LOAD SERVED	LOAD-V.A.
1	20	1	4	4	20	LIGHTING & RECEPTACLES	560
2	20	1	4	4	20	SPOT LIGHT, 1000W	1000
3	20	1				SPARE	
4	20	1				SPARE	
5						SPACE	
6						SPACE	
7						SPACE	
8						SPACE	
						TOTAL CONN. LOAD	1560

TOTAL CONN. LOAD 1.56 KVA.

80 %DEMAND = EST. DEMAND LOAD: 1.25 SERVED FROM: PPSB

NOTES:

1. FOR LEGEND, ABBREVIATIONS AND LIGHT FIXTURE SCHEDULE SEE DRAWING SE-1.
2. COORDINATE LOCATION OF ALL ELECTRICAL DEVICES AND EQUIPMENT WITH ALL OTHER TRADES.
3. ALL WIRING SHALL BE IN CONCEALED OR SURFACE MOUNTED METAL CONDUIT.
4. PLAN IS TYPICAL FOR ALL GUARD TOWERS 1-4.
5. FOR GROUNDING ROD ACCESS BOX DETAIL SEE SHEET SE-2.
6. PROVIDE 50 METAL C WITH TWO 16mm2 COPPER CONDUCTORS AND 16mm2 COPPER GROUNDING CONDUCTOR TO JUNCTION BOX. FOR JUNCTION BOX DETAIL SEE SHEET SE-5.
7. FOR CONTINUATION TO SECONDARY DISTRIBUTION SYSTEM SEE DRAWING XE-1.
8. PROVIDE MANUFACTURER SUPPLIED RED, BLUE, AND BLACK LAMPS.
9. FOR BUILDING NORTH ORIENTATION SEE SHEET C-1.

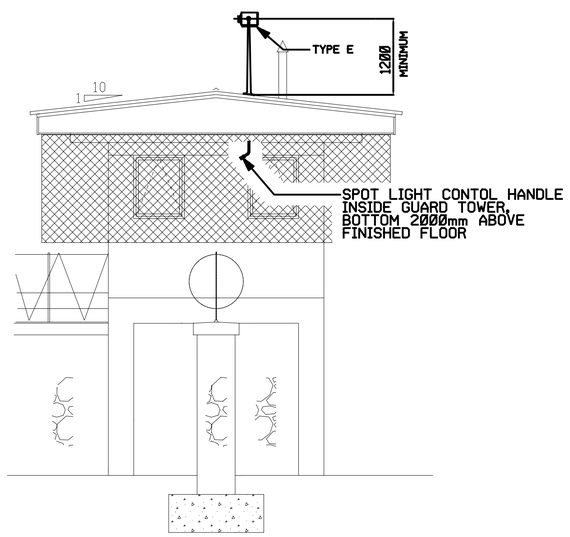

SPOTLIGHT MOUNTING DETAIL

NOT TO SCALE

UNLESS OTHERWISE NOTED, LINEAR DIMENSIONS SHOWN ARE IN MILLIMETERS.

SYMBOL	DESCRIPTION	DATE	APP

DESIGNED BY: JLK
DWN BY: JLK
CHK BY: JLK
DATE: 29 OCTOBER 2007
SUBMITTED BY:
FILE NO.: AR060078-EL01PN

US Army Corps of Engineers
Afghanistan Engineer District

AFGHANISTAN NATIONAL POLICE (ANP) DISTRICT HEADQUARTERS COMPOUNDS – 1 STORY HQ
VARIOUS LOCATIONS, AFGHANISTAN
GUARD TOWERS

SHEET REFERENCE NUMBER:
B
E-1

$DATE$
$FILE$

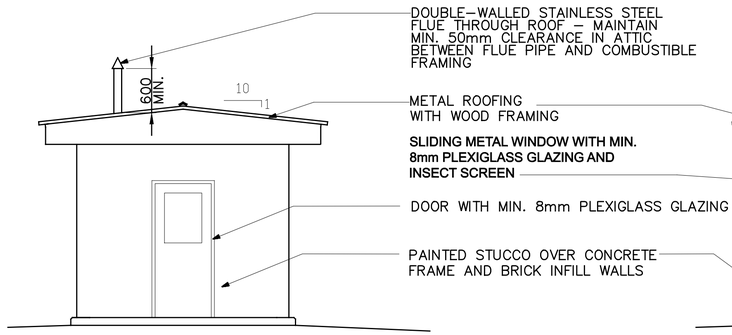

ELEVATION
SCALE=1:50

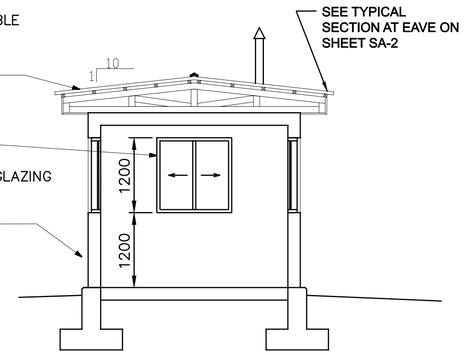

SECTION
SCALE=1:50

GENERAL NOTES:

1. ALL WALLS AND CEILINGS SHALL BE PLASTERED AND PAINTED.
2. CONTRACTOR SHALL CONFIGURE THE METAL ROOFING AS SHOWN AND CONSTRUCT WITH APPROPRIATE WOOD FRAMING.
3. FLOOR SHALL BE SEALED CONCRETE.

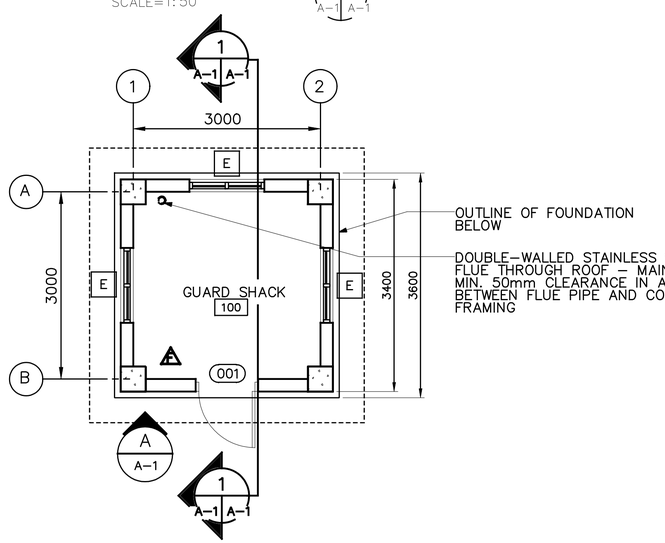

FIRST FLOOR PLAN
SCALE=1:50

△2 PROVIDE PORTABLE FIRE EXTINGUISHERS, ABC DRY CHEMICAL 4A:60B:C

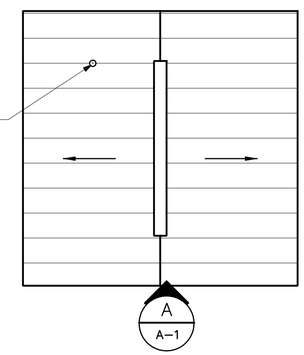

ROOF PLAN
SCALE=1:50

ROOM FINISH SCHEDULE LEGEND

FLOOR TYPE
F1 SEALED CONCRETE

FLOOR COLOR
1 SEALED CONCRETE – NATURAL FINISH

WALL TYPE
W1 PAINTED PLASTER

CEILING TYPE
C1 PAINTED EXPOSED STRUCTURE

ROOM FINISH SCHEDULE

ROOM NO.	ROOM NAME	FLOOR MAT'L.	BASE MAT'L.	WALLS MAT'L.	CEILING MAT'L.	CEILING HEIGHT	REMARKS
101	GUARD SHACK	F1	--	W1	C1	3400	

DOOR SCHEDULE

DOOR NO.	LOCATION	TYPE	MAT'L	WIDTH	HEIGHT	THICK	FRAME MAT"L	FIRE LABEL	HDW SET	REMARKS
001	GUARD SHACK	F	WOOD	1800	2150	45	WOOD	--	2	

ROOM FINISH SCHEDULE NOTES:

1. ALL WALL PENETRATIONS SHALL BE SEALED TO PROVIDE A NEAT APPEARANCE. PENETRATIONS OF EXTERIOR WALLS SHALL BE SEALED TO BE WATER-TIGHT.
2. SEALANTS SHALL MATCH THE COLOR OF ADJACENT SURFACES.

1 0 1 2 3 4
1:50

UNLESS OTHERWISE NOTED, LINEAR DIMENSIONS SHOWN ARE IN MILLIMETERS.

SYMBOL	DESCRIPTION	DATE	APR

DESIGNED BY: YSK
DATE: 29 OCTOBER 2007
DWN BY: JSG
SUBMITTED BY:
CHK BY: TBD
FILE NO.: AF0607C-AR01PN

US Army Corps of Engineers
Afghanistan Engineer District

AFGHANISTAN NATIONAL POLICE (ANP) DISTRICT HEADQUARTERS COMPOUNDS – 1 STORY HQ
VARIOUS LOCATIONS, AFGHANISTAN
GUARD SHACK
FLOOR PLANS AND ELEVATIONS

SHEET REFERENCE NUMBER:
C
A-1

10/27/2007
S:\Engineering & Construction\Engineering\00_RFPs in-progress\ANP\ANP ON-Story Design\ANP Dist HQ 1Story Design Changes 26Oct07\Microstation Files\Arch\AF0607C-AR01PN.dgn

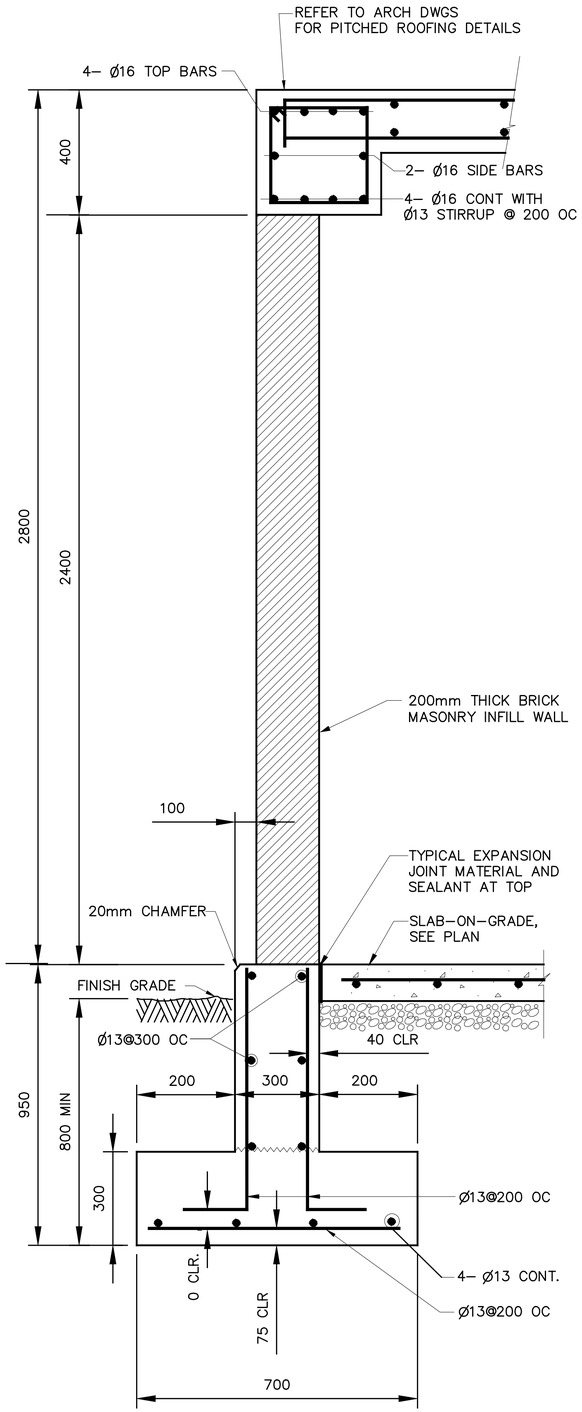

TYP EXTERIOR WALL SECTION

NOT TO SCALE

1 S–1 S–1

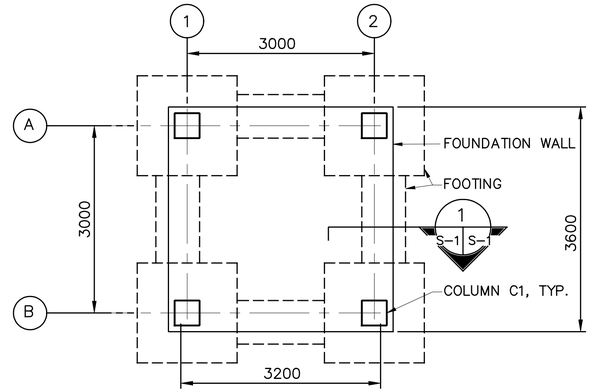

ALL SLABS ON GRADE (TYP): 150 MM THICK CONC SLAB ON GRADE WITH % %870913 AT 300 MM ON CENTER TWO WAYS. 100mm THK CAPILLARY WATER BARRIER ON 95% COMPACTED GROUND.

FOUNDATION AND SLAB PLAN

SCALE= 1:50

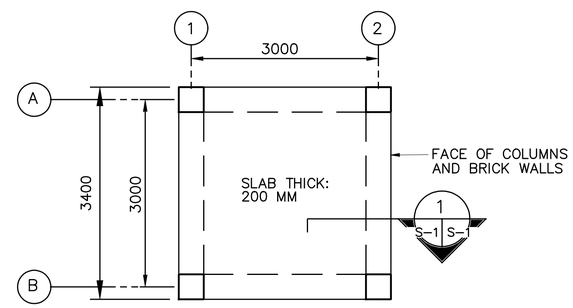

TOP BAR: Ø13@300 ON CENTER TWO WAYS
BOTTOM BAR: Ø13@300 ON CENTER TWO WAYS.

ROOF FRAMING AND SLAB PLAN

SCALE= 1:50

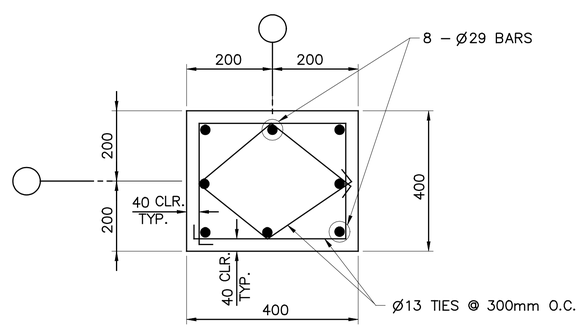

C1
COLUMN TYPE

NOTE: SEE WELL HOUSE (E) STRUCTURAL PLATES FOR COLUMN DETAILS AND SCHEDULES

GENERAL NOTES

1. DESIGN LOADS (SERVICE)

   LIVE LOADS:

   ROOF: 1.0 KPA (20 PSF)
   OTHERS: 4.8 KPA (100 PSF)
   8.9 KN (2.0 K) CONCENTRATED LOAD

   WIND LOADS PER IBC–2003

   USING A "3–SECOND" WIND VELOCITY OF 125 KPH
   EXPOSURE C AND IMPORTANCE FACTOR I=1.0

   EARTHQUAKE LOADS PER IBC–2003:

   USING A SEISMICITY: Ss=1.65g AND S_1 =0.75g

2. MATERIALS:

   CONCRETE: 28 MPa (4 KSI)
   CYLINDER STRENGTH AT 28 DAYS

   REINFORCING: ASTM A615 GRADE 60 (60 KSI)

3. WORK THESE STRUCTURAL DRAWINGS WITH THE STANDARD-DETAILS DRAWINGS.

4. A RELATIVE (DATUM) FINISH FLOOR ELEVATION EQUAL TO 0.00 M. IS USED AS REFERENCE ELEVATION FOR ALL STRUCTURAL DRAWINGS. COORDINATE WITH SITE SPECIFIC GRADING PLAN TO BE PROVIDED BY CONTRACTOR.

5. FOUNDATIONS ARE DESIGNED USING AN ALLOWABLE BEARING PRESSURE OF 0.75 KG/SQ. CM (1500 PSF), AND BOTTOM OF FOOTINGS ARE PLACED AS SHOWN ON DRAWINGS. GEOTECHNICAL INVESTIGATION SHALL CONFIRM BEARING CAPACITY TO BE NO LESS THAN 0.75 KG/SQ CM. IF GEOTECHNICAL INVESTIGATION SHOWS LESS THAN 0.75 KG/SQ CM THE CONTRACTOR SHALL REDESIGN FOOTINGS BASED ON THE GEOTECHNICAL INVESTIGATION. SEE SPECIFICAITON 01015 PARAGRAPH, GEOTECHNICAL, FOUNDATION AND SURVEY.

6. FOR BUILDING NORTH ORIENTATION SEE SHEET C-1.

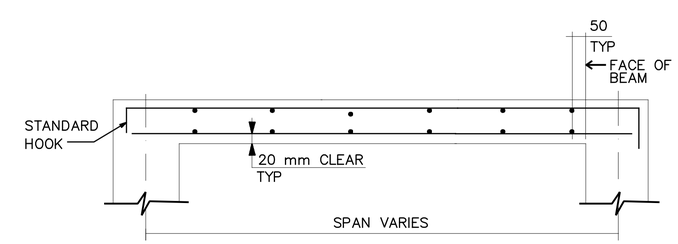

TYPICAL SECTION FOR STRUCTURAL SLABS

NOT TO SCALE

1 0 1 2 3 4
1:50

UNLESS OTHERWISE NOTED, LINEAR DIMENSIONS SHOWN ARE IN MILLIMETERS.

REVISIONS			
*	SYMBOL	DESCRIPTION	DATE	APR
			03/04/2007	

DESIGNED BY: JK | DATE: 29 OCTOBER 2007
DWN BY: JK | SUBMITTED BY:
CHK BY: JK | FILE NO.: AF0607C–SB01PN

US Army Corps of Engineers
Afghanistan Engineer District

AFGHANISTAN NATIONAL POLICE (ANP) DISTRICT HEADQUARTERS COMPOUNDS – 1 STORY HQ
VARIOUS LOCATIONS, AFGHANISTAN
GUARD SHACKS
FOUNDATION AND SLAB PLAN
ROOF FRAMING PLAN

SHEET REFERENCE NUMBER:
C
S–1

10/27/2007
S:\Engineering & Construction\Engineering\00_RFPs in Progress\ANP\ANP 01_1-Story Design\ANP Dist HQ 1Story Design Changes 26Oct07\Microstation Files\struct\AF0607C-SB01PN.dgn

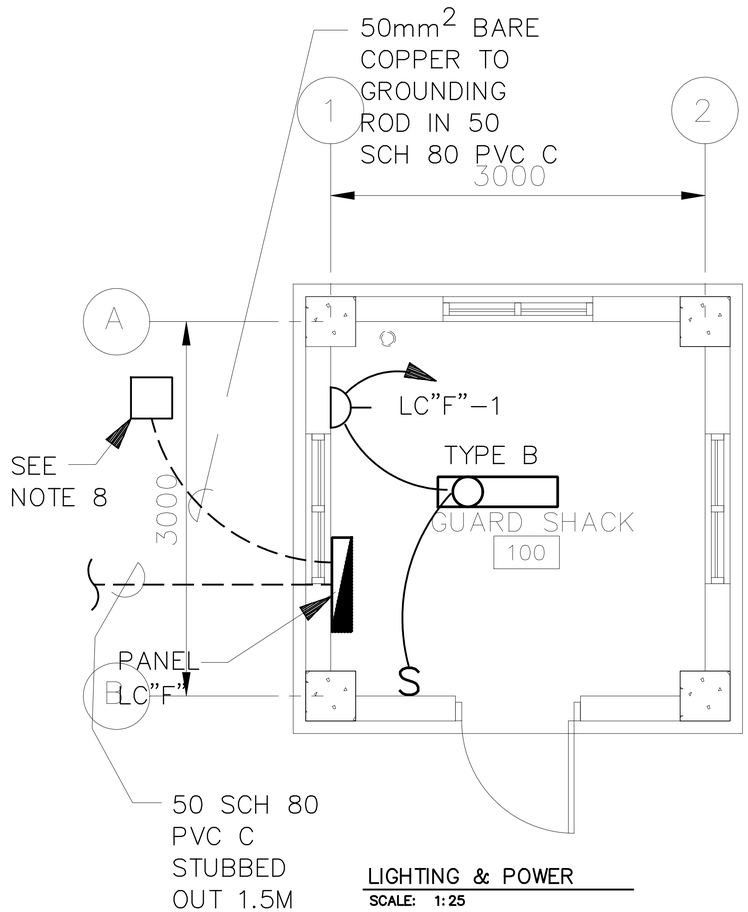

LIGHTING & POWER
SCALE: 1:25

FLOOR PLAN
SCALE= 1:50

NOTES:

1. FOR LEGEND AND ABBREVIATIONS SEE DRAWING SE-1.
2. EMERGENCY LIGHT SHALL BE CONNECTED AHEAD OF LIGHT SWITCH.
3. FOR LIGHT FIXTURE SCHEDULE SEE DRAWING SE-1.
4. COORDINATE LOCATION OF ALL ELECTRICAL FIXTURES AND MECHANICAL EQUIPMENT WITH ALL OTHER TRADES.
5. ALL WIRING SHALL BE CONCEALED OR SURFACE MOUNTED IN METAL CONDUIT.
6. PLAN IS TYPICAL FOR GUARD SHACK #1 AND #2. SECONDARY SERVICE IS SUPPLIED FROM PANEL LOAD CENTER "B2" (LC "B2") LOCATED IN THE GUARD TOWER #2.
7. SEE DRAWING XE-1 FOR LOCATION OF GUARD SHACKS.
8. FOR GROUNDING ROD ACCESS BOX SEE SHEET SE-2.
9. FOR SECONDARY DISTRIBUTION SEE DRAWING XE-1.
10. PROVIDE 53mm RGS C STUBBED OUT 1.5M, 600 BFG, TO BE TIED INTO SITE COMM CH AND DIRECT BURIED DUCT SYSTEM.
11. FOR BUILDING NORTH ORIENTATION SEE SHEET C-1.

LOAD CENTER "F" GUARD SHACK #1 & #2

40 AMP MAIN CIRCUIT BREAKER, 220V, 1 PH, 2W, 50 HZ, 100A BUS, 10000 AIC

CKT. NO.	TRIP AMPS	NO. POLES	WIRE MM^2	GND MM^2	CONDUIT MM	LOAD SERVED	LOAD-V.A.
1	20	1	4	4	20	LIGHTING& RECEP.GUARD SHACK#2	300
2	25	1	6	6	20	ELECT.HEAT GUARD SHACK#2	4000
3	20	1				SPARE	
4	20	1				SPARE	
5						SPACE	
6						SPACE	
7						SPACE	
8						SPACE	
						TOTAL CONN. LOAD	4300

TOTAL CONN. LOAD 4.30 KVA.
80 %DEMAND = EST. DEMAND LOAD: 3.44 SERVED FROM: LC-"C"

1 .50 0 1 1.5
1:25

UNLESS OTHERWISE NOTED, LINEAR DIMENSIONS SHOWN ARE IN MILLIMETERS.

SYMBOL	DESCRIPTION	DATE	APR

DESIGNED BY: MM
DWN BY: MM
CHK BY: MFH
DATE: 29 OCTOBER 2007
SUBMITTED BY:
FILE NO.: AF0607C-EL01PN

US Army Corps of Engineers
Afghanistan Engineer District

AFGHANISTAN NATIONAL POLICE (ANP) DISTRICT HEADQUARTERS COMPOUNDS - 1 STORY HQ
VARIOUS LOCATIONS, AFGHANISTAN
GUARD SHACKS
LIGHTING PLAN

SHEET REFERENCE NUMBER:
C
E-1

10/27/2007
S:\Engineering & Construction\Engineering\00_RFPs in Progress\ANP\ANP 01 1-Story Design\ANP Dist HQ 1Story Design Changes 26Oct07\Microstation Files\elec\AF0607C-EL01PN.dgn

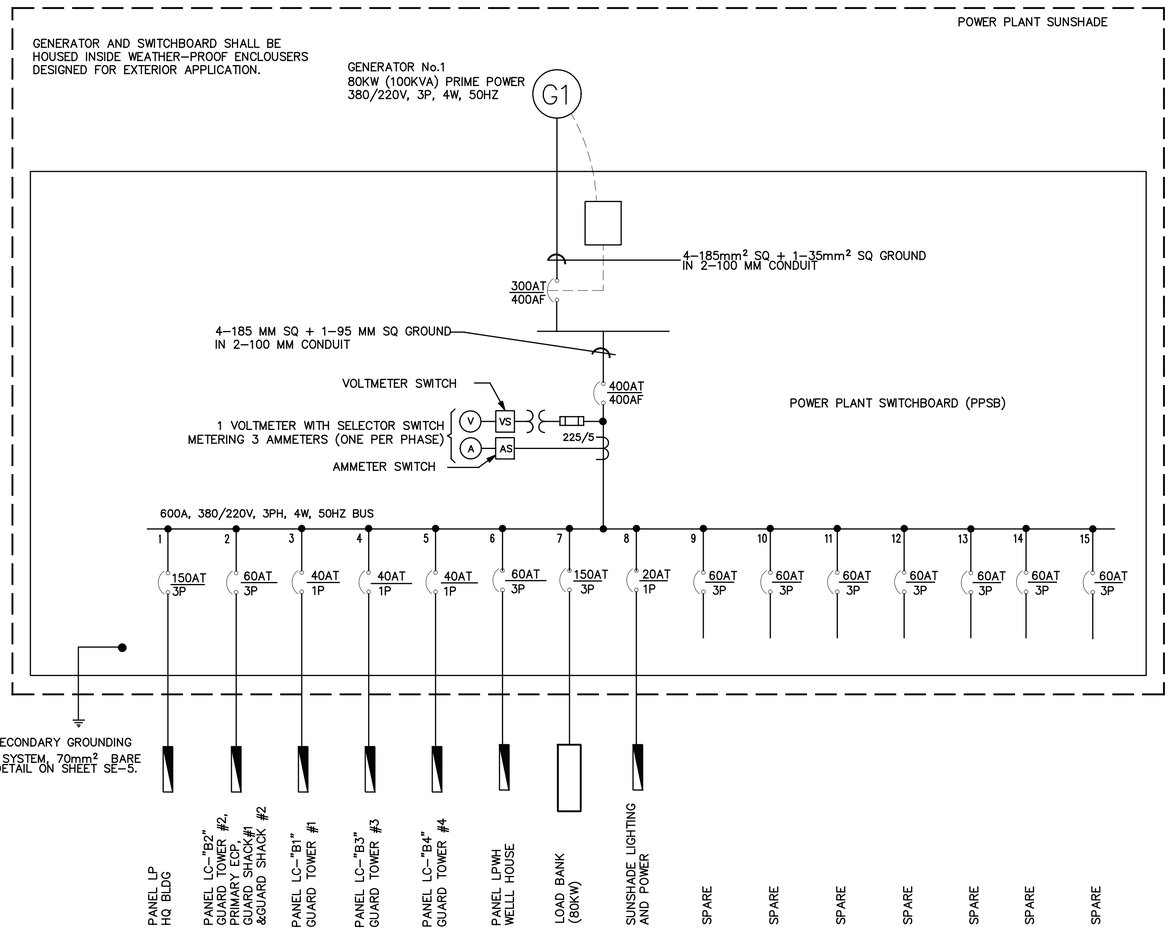

ONE LINE DIAGRAM
NOT TO SCALE

NOTES:

1. FOR LEGEND AND ABBREVIATIONS SEE DRAWING SE–1.
2. FOR POWER PLANT GROUNDING DETAILS SEE SHEET SE–5.
3. CONTRACTOR SHALL CONFIRM THAT ALL FINAL CIRCUIT RATINGS ARE BASED ON THE ACTUAL NAMEPLATE OF THE SUPPLIED EQUIPMENT.
4. ALL PPSB SECONDARY DISTRIBUTION CIRCUIT CONDUITS SHALL BE RAN FROM THE BOTTOM OF PPSB THROUGH GENERATOR CONCRETE SLAB TO ELECRIC HAND HOLES IN SCHEDULE 40 PVC CONDUIT.
5. ALL SECONDARY DISTRIBUTION CABLES SHALL BE 600V – FOUR CORE OR TWO CORE (AS INDICATED) COPPER CONDUCTOR PVC INSULATED PVC SHEATHED CABLES (CU/PVC/PVC).
6. THE POWER PLANT SWITCHBOARD SHALL BE A MANUFACTURERS STANDARD PRODUCT WITH MOLDED CASE CKT BREAKERS, DEAD FRONT CONSTRUCTION IN AN APPROVED IP54 ENCLOSURE.
7. FOR A TYPICAL POWER PLANT EQUIPMENT LAYOUT SEE THE GROUNDING PLAN ON SHEET SE–5.

PANELBOARD: PPSB
MOUNTED: FLOOR
ASYM. A.I.C. MIN: MINIMUM 22,000
MAIN BREAKER (AT/AF): 300/400
VOLTAGE RATING: 380/220V, 3PH, 4W, 50HZ
BUS AMP. RATING: 400

CKT. NO.	TRIP AMPS	NO. POLES	WIRE MM²	GND MM²	CONDUIT MM	CONNECTED	REMARKS
1	150	3	70	50	75	73.26	PANEL LP, HEADQUARTERS BUILDING
2	60	3	16	6	38	10.16	PANEL LC–"B2": GUARD TOWER #2, PRIMARY ECP, GUARD SHACK #1, GUARD SHACK #2
3	40	1	10	6	25	1.56	PANEL LC–"B1": GUARD TOWER #1
4	40	1	25	16	38	1.56	PANEL LC–"B3": GUARD TOWER #3
5	40	1	25	16	38	1.56	PANEL LC–"B4": GUARD TOWER #4
6	60	3	16	6	38	9.81	PANEL LPWH,WELL HOUSE BUILDING
7	150	3	70	16	75		LOAD BANK
8	20	1	6	4	25	0.51	SUNSHADE LIGHTING AND POWER
9	60	3					SPARE
10	60	3					SPARE
11	60	3					SPARE
12	60	3					SPARE
13	60	3					SPARE
14	60	3					SPARE
15	60	3					SPARE
TOTAL CONNECTED LOAD						98.42 KVA	

CONN. LOAD: 98.42 KVA 80 % DEMAND = EST DEM LOAD 78.74 KVA
SUPPLIED FROM: GENERATORS

78.74 KVA x 1.20 (SPARE) = 94.49 KVA = 75.52 KW

UNLESS OTHERWISE NOTED, LINEAR DIMENSIONS SHOWN ARE IN MILLIMETERS.

SYMBOL	DESCRIPTION	DATE	APR

DESIGNED BY: MM | DATE: 29 OCTOBER 2007
DWN BY: JLK | SUBMITTED BY:
CHK BY: JLK | FILE NO.: AF0607D–EP01DI

US Army Corps of Engineers
Afghanistan Engineer District

AFGHANISTAN NATIONAL POLICE (ANP) DISTRICT HEADQUARTERS COMPOUNDS – 1 STORY HQ
VARIOUS LOCATIONS, AFGHANISTAN
POWER PLANT
ONE LINE DIAGRAM

SHEET REFERENCE NUMBER:
D
E–1

10/27/2007
S:\Engineering & Construction\Engineering\00_RFPs in-progress\ANP\ANP_ONE-Story Design\ANP Dist HQ 1Story Design Changes 26Oct07\Microstation Files\Elec\AF0607D-EP01DI.dgn

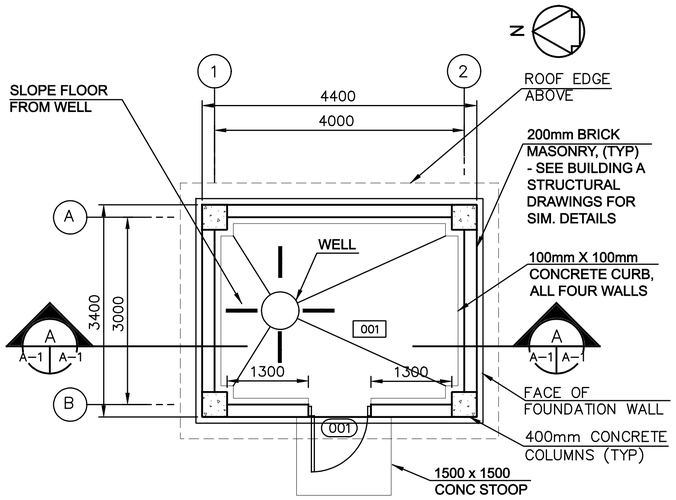

FLOOR PLAN
SCALE=1 : 50

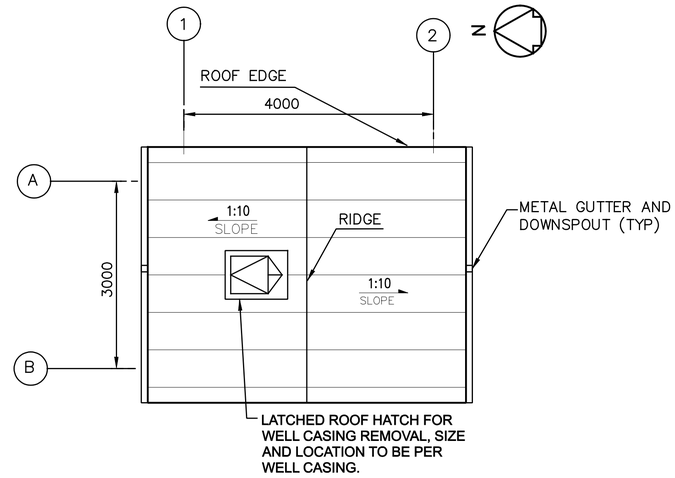

ROOF PLAN
SCALE= 1:50

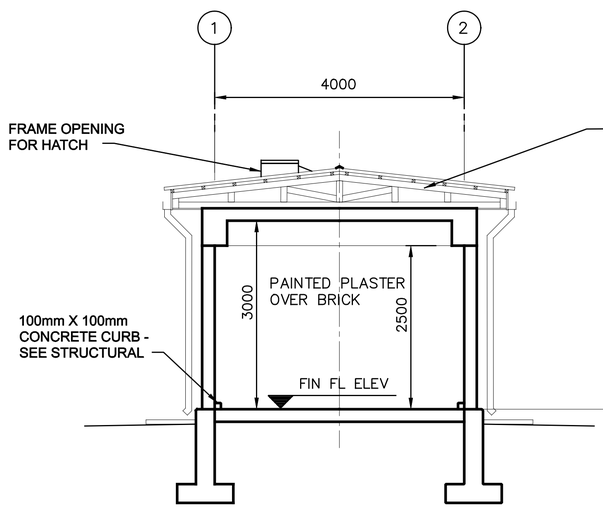

BUILDING SECTION
SCALE=1:100

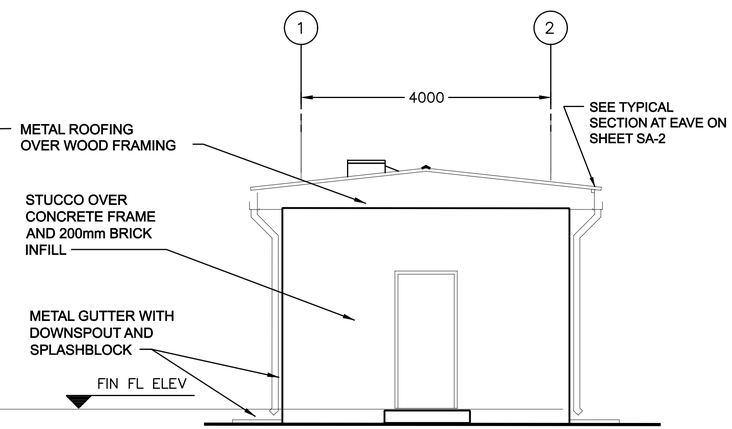

ELEVATION
SCALE=1:50

ROOM FINISH SCHEDULE

ROOM NO.	ROOM NAME	FLOOR MAT'L.	BASE MAT'L.	WALLS MAT'L.	CEILING MAT'L.	CEILING HEIGHT	REMARKS
001	WELL HOUSE ROOM	F1	--	W1	C1	3000	

DOOR SCHEDULE

DOOR NO.	LOCATION	TYPE	MAT'L	WIDTH	HEIGHT	THICK	FRAME MAT'L	FIRE LABEL	HDW SET	REMARKS
001	WELL HOUSE ROOM	F	WOOD	900	2150	45	WOOD	--	6	

ROOM FINISH SCHEDULE LEGEND

FLOOR TYPE
F1 SEALED CONCRETE

WALL TYPE
W1 PAINTED PLASTER – OFF WHITE

CEILING TYPE
C1 PAINTED EXPOSED STRUCTURE – OFF WHITE

ROOM FINISH SCHEDULE NOTES:

1. ALL WALL PENETRATIONS SHALL BE SEALED TO PROVIDE A NEAT APPEARANCE. PENETRATIONS OF EXTERIOR WALLS SHALL BE SEALED TO BE WATER–TIGHT.
2. SEALANTS SHALL MATCH THE COLOR OF ADJACENT SURFACES.

1:50

UNLESS OTHERWISE NOTED, LINEAR DIMENSIONS SHOWN ARE IN MILLIMETERS.

SYMBOL	DESCRIPTION	DATE	APR

DESIGNED BY: YSK
DWN BY: JSG
CHK BY: TBD
DATE: 29 OCTOBER 2007
SUBMITTED BY:
FILE NO.: af0607E–ar01pn

US Army Corps of Engineers
Afghanistan Engineer District

AFGHANISTAN NATIONAL POLICE (ANP) DISTRICT HEADQUARTERS COMPOUNDS – 1 STORY HQ
VARIOUS LOCATIONS, AFGHANISTAN
WELL HOUSE
FLOOR PLAN, ELEVATIONS AND SCHEDULES

SHEET REFERENCE NUMBER:
E
A–1

10/27/2007 S:\Engineering & Construction\Engineering\00_RFPs in-progress\ANP\ANP 01_1-Story Design\ANP Dist HQ 1Story Design Changes 26Oct07\Microstation Files\Arch\af0607E-ar01pn.dgn

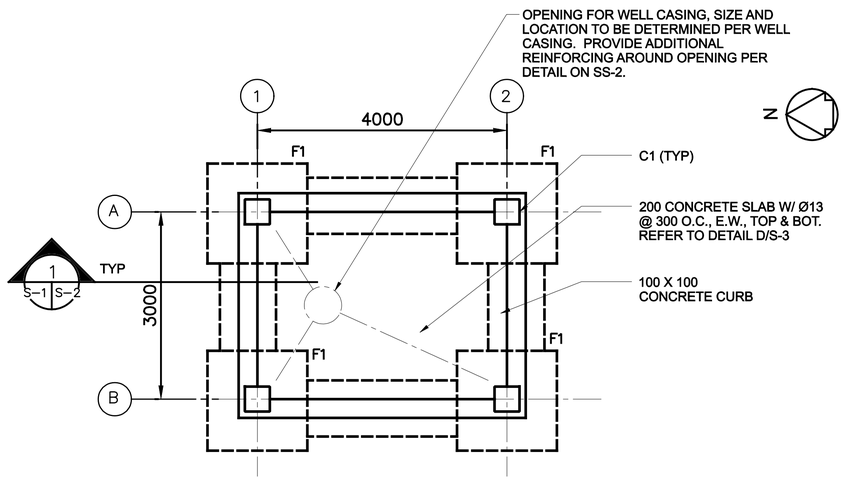

FOUNDATION AND SLAB PLAN
SCALE=1:50

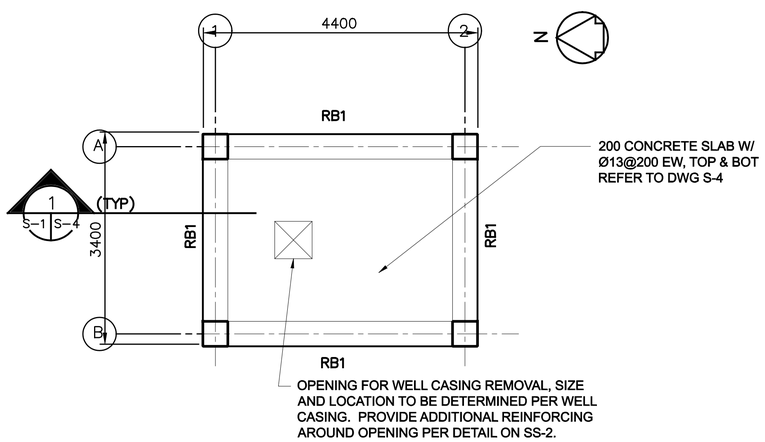

ROOF FRAMING PLAN
SCALE=1:50

1. DESIGN LOADS (SERVICE)

LIVE LOADS:

ROOF: 1.0 KPA (20 PSF)
OTHERS: 4.8 KPA (100 PSF)
8.9 KN (2.0 K) CONCENTRATED LOAD

WIND LOADS PER IBC–2003

USING A "3–SECOND" WIND VELOCITY OF 125 KPH (78 MPH), EXPOSURE C AND IMPORTANCE FACTOR I=1.0

EARTHQUAKE LOADS PER IBC–2003:

USING A SEISMICITY: Ss=1.65g AND S_1 =0.75g

2. MATERIALS:

CONCRETE: 28 MPa (4 KSI)
CYLINDER STRENGTH AT 28 DAYS

REINFORCING: ASTM A615 GRADE 60 (60 KSI)

3. WORK THESE STRUCTURAL DRAWINGS WITH THE STANDARD-DETAILS DRAWINGS.

4. A RELATIVE (DATUM) FINISH FLOOR ELEVATION EQUAL TO 0.00 M. IS USED AS REFERENCE ELEVATION FOR ALL STRUCTURAL DRAWINGS. COORDINATE WITH SITE SPECIFIC GRADING PLAN TO BE PROVIDED BY CONTRACTOR.

5. FOUNDATIONS ARE DESIGNED USING AN ALLOWABLE BEARING PRESSURE OF 0.75 KG/SQ CM (1500 PSF), AND BOTTOM OF FOOTINGS ARE PLACED AS SHOWN ON DRAWINGS. GEOTECHNICAL INVESTIGATION SHALL CONFIRM BEARING CAPACITY TO BE NO LESS THAN 0.75 KG/SQ CM. IF GEOTECHNICAL INVESTIGATION SHOWS LESS THAN 0.75 KG/SQ CM THE CONTRACTOR SHALL REDESIGN FOOTINGS BASED ON THE GEOTECHNICAL INVESTIGATION. SEE SPECIFICATION 01015 PARAGRAPH, GEOTECHNICAL, FOUNDATION AND SURVEY.

6. REFER TO DWG S-3 FOR COLUMN SCHEDULE.

7. REFER TO DWG S-2 FOR FOOTING SCHEDULE.

8. REFER TO DWG S-4 FOR BEAM SCHEDULE.

1 0 1 2 3 4
1:50

UNLESS OTHERWISE NOTED, LINEAR DIMENSIONS SHOWN ARE IN MILLIMETERS.

SYMBOL	DESCRIPTION	DATE	APR

DESIGNED BY: TCP
DWN BY: TCP
CHK BY: KGO
DATE: 29 OCTOBER 2007
SUBMITTED BY:
FILE NO.: AF0607E–SB01PN

US Army Corps of Engineers
Afghanistan Engineer District

AFGHANISTAN NATIONAL POLICE (ANP) DISTRICT HEADQUARTERS COMPOUNDS – 1 STORY HQ
VARIOUS LOCATIONS, AFGHANISTAN
WELL HOUSE
FOUNDATION PLAN AND ROOF PLAN

SHEET REFERENCE NUMBER:
E
S–1

10/27/2007
S:\Engineering & Construction\Engineering\00_RFPs in-progress\ANP\ANP ON 1-Story Design\ANP 1-Story Dist HQ 1Story Design Changes 26Oct07\Microstation Files\struct\AF0607E_SB01PN.dgn

FOOTING SCHEDULE

MARK	CONCRETE DIMENSIONS			REINFORCEMENT		REMARKS
	WIDTH	LENGTH	THICKNESS	TOP	BOTTOM	
F1	1600	1600	300	——	5–Ø 25 E.W.	REFER TO TYPICAL COLUMN FOOTING DETAIL THIS SHEET.

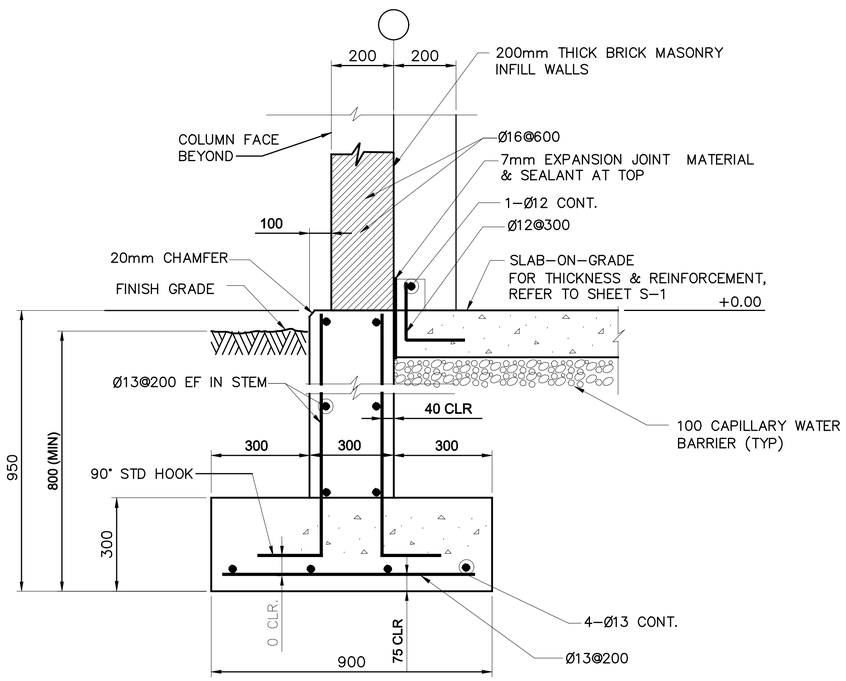

TYPICAL WALL FOOTING

SECTION 1 S–1 S–2
SCALE=N.T.S.

NOTES:
1. HORIZONTAL STEM WALL AND FOOTING REINFORCEMENTS ARE CONTINUOUS THROUGH COLUMN AND COLUMN FOOTING
2. AT DISCONTINUOUS STEM WALL BARS TERMINATE WITH STANDARD HOOK IN COLUMN. FOOTING BARS TERMINATE WITH 600 MM EMBEDMENT IN COLUMN FOOTING.

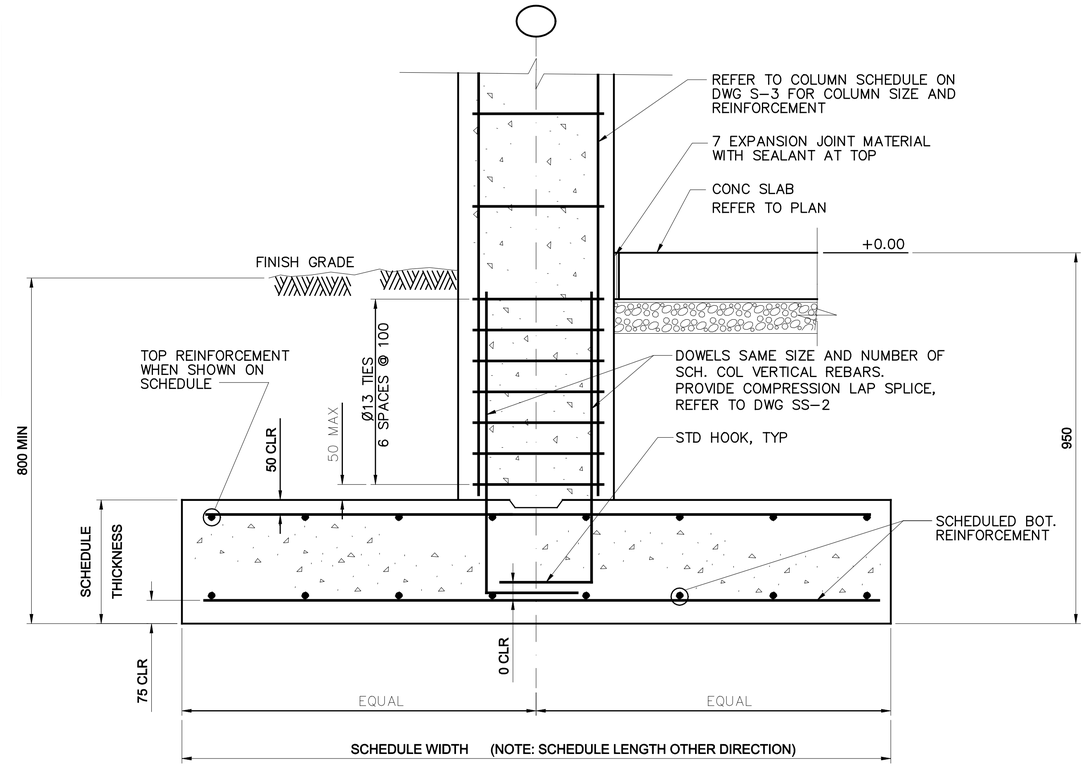

DETAIL A S–2 S–2
SCALE=N.T.S.

TYPICAL COLUMN FOOTING

UNLESS OTHERWISE NOTED, LINEAR DIMENSIONS SHOWN ARE IN MILLIMETERS.

SYMBOL	DESCRIPTION	DATE	APR

DESIGNED BY: TCP
DWN BY: TCP
CHK BY: KGO
DATE: 29 OCTOBER 2007
SUBMITTED BY:
FILE NO.: AF0607E–SB02DT

US Army Corps of Engineers
Afghanistan Engineer District

AFGHANISTAN NATIONAL POLICE (ANP) DISTRICT HEADQUARTERS COMPOUNDS – 1 STORY HQ
VARIOUS LOCATIONS, AFGHANISTAN
WELL HOUSE
FOOTING DETAILS

SHEET REFERENCE NUMBER:
E
S–2

10/27/2007
S:\Engineering & Construction\Engineering\00 RFPs in-progress\ANP\ANP ON 1-Story Design\ANP 3 Dist HQ 1Story Design Changes 26Oct07\Microstation Files\struct\AF0607E-SB02DT.dgn

COLUMN SCHEDULE

NOTES: 1. REFER TO DETAILS ON PLATES S–3 AND S–2 FOR TYPICAL COLUMN DETAILS.

COLUMN GRIDS	COLUMN TYPE	CONCRETE DIMENSIONS		VERTICAL REINFORCEMENT	TIE REINFORCEMENT	
		WIDTH	DEPTH		SIZE	SPACING
A–1, A–2 B–1, B–2	C1	400	400	8–Ø 29	Ø13	300

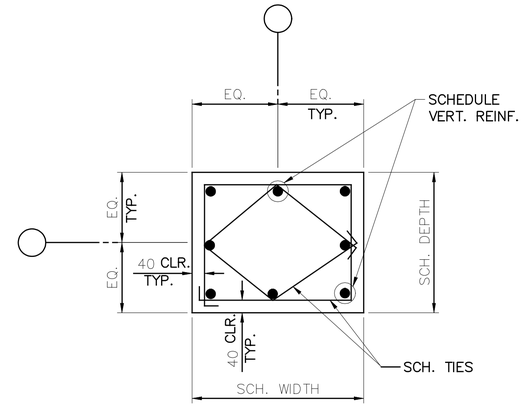

C1

COLUMN TYPE

DETAIL
SCALE=N.T.S.
A
S–3 S–3

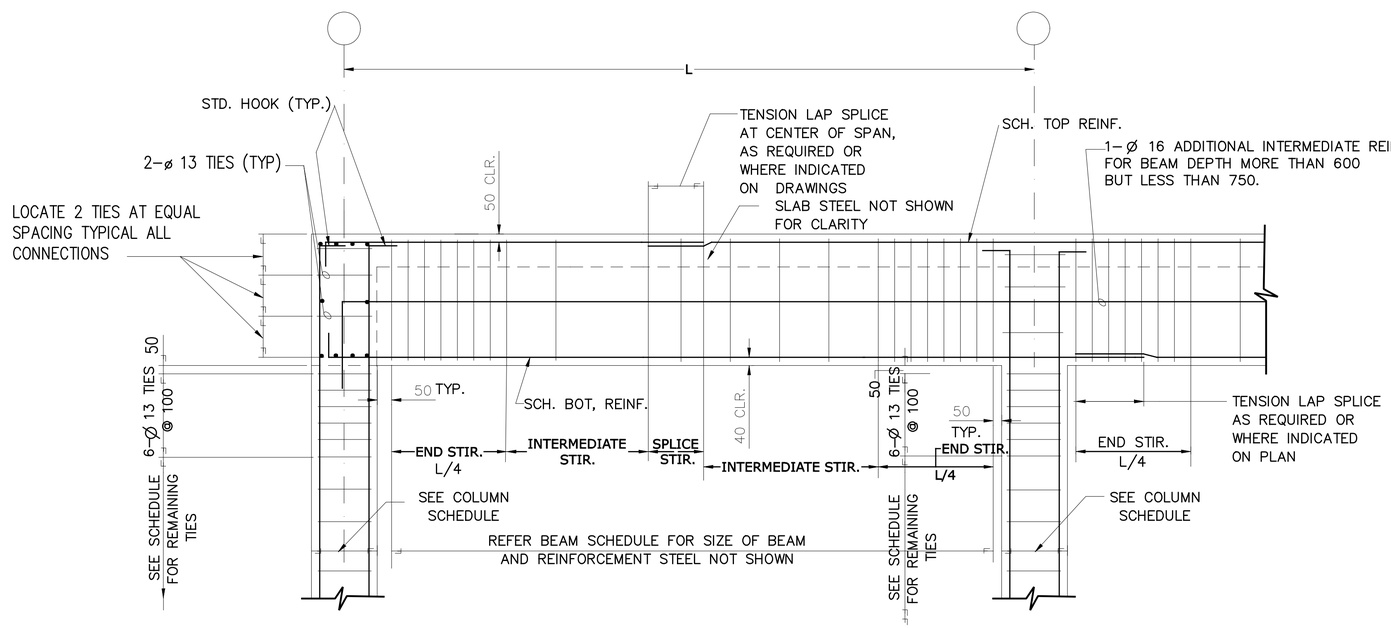

TYPICAL BEAM TO COLUMN END CONNECTION

DETAIL
SCALE=N.T.S.
B
S–3 S–3

TYPICAL BEAM TO COLUMN INTERIOR CONNECTION

DETAIL
SCALE=N.T.S.
C
S–3 S–3

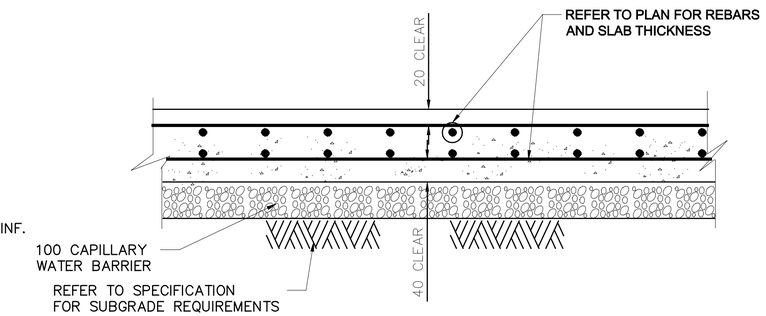

SLAB–ON–GRADE WITH TOP & BOTTOM REINFORCEMENTS

DETAIL
SCALE=N.T.S.
D
S–1 S–3

UNLESS OTHERWISE NOTED, LINEAR DIMENSIONS SHOWN ARE IN MILLIMETERS.

SYMBOL	DESCRIPTION	DATE	APR

DESIGNED BY: TCP
DATE: 29 OCTOBER 2007
DWN BY: TCP
SUBMITTED BY:
CHK BY: KGO
FILE NO.: AF0607E–SF03DT

US Army Corps of Engineers
Afghanistan Engineer District

AFGHANISTAN NATIONAL POLICE (ANP) DISTRICT HEADQUARTERS COMPOUNDS – 1 STORY HQ
VARIOUS LOCATIONS, AFGHANISTAN
WELL HOUSE
SLAB–ON–GRADE DETAILS

SHEET REFERENCE NUMBER:
E
S–3

10/27/2007
S:\Engineering & Construction\Engineering\00_RFPs in Progress\ANP\ANP 01 - Story Design\ANP Dist HQ 1Story Design Changes 26Oct07\Microstation Files\struct\AF0607E-SF03DT.dgn

BEAM SCHEDULE

MARK	CONCRETE DIMENSIONS		FLEXURAL REINFORCEMENT		STIRRUP REINFORCEMENT				REMARKS
					SIZE	TYPE	SPACING		
	WIDTH	DEPTH	TOP	BOTTOM			ENDS & SPLICE	INTERMEDIATE	
RB1	400	700	4–Ø 22	4–Ø 22	Ø13		160	320	

NOTE: REFER TO DETAILS ON PLATE S–2 FOR TYPICAL BEAM ELEVATIONS AND SECTION 1 THIS PLATE FOR TYPICAL BEAM SECTION.

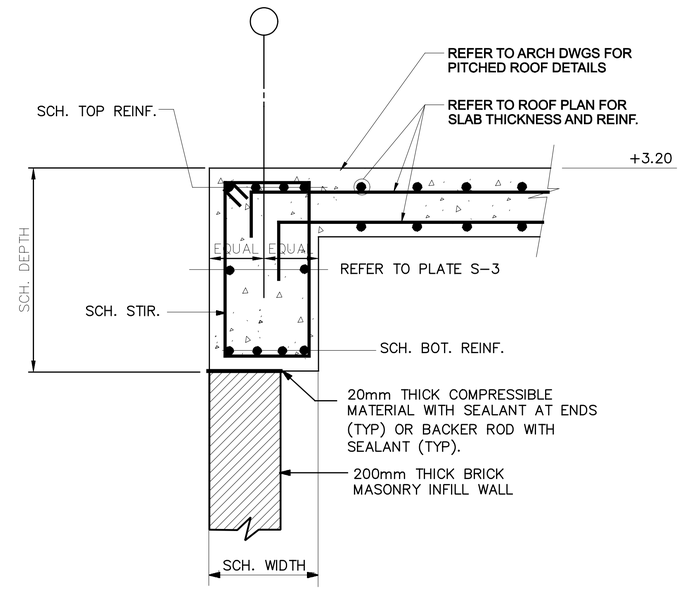

SECTION 1 S–1 S–4
SCALE=N.T.S.

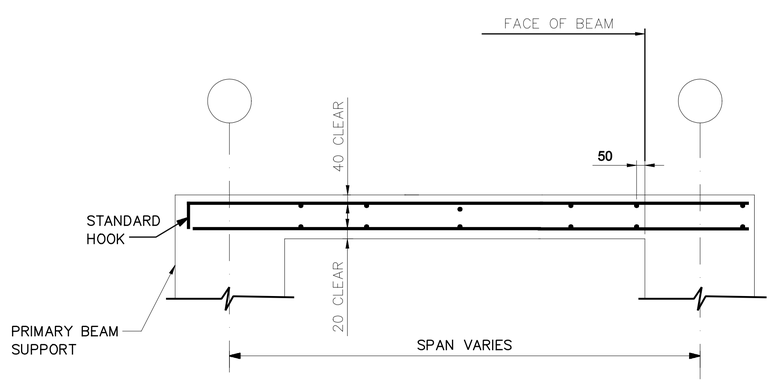

STRUCTURAL SLAB WITH TOP & BOTTOM REINFORCEMENTS

UNLESS OTHERWISE NOTED, LINEAR DIMENSIONS SHOWN ARE IN MILLIMETERS.

SYMBOL	DESCRIPTION	DATE	APR

DESIGNED BY: TCP | DATE: 29 OCTOBER 2007
DWN BY: TCP | SUBMITTED BY:
CHK BY: KGO | FILE NO.: AF0607E–SF04DT

US Army Corps of Engineers
Afghanistan Engineer District

AFGHANISTAN NATIONAL POLICE (ANP) DISTRICT HEADQUARTERS COMPOUNDS – 1 STORY HQ
VARIOUS LOCATIONS, AFGHANISTAN
WELL HOUSE
ROOF BEAM AND STRUCTURAL SLAB DETAILS

SHEET REFERENCE NUMBER:
E
S–4

10/27/2007
S:\Engineering & Construction\Engineering\00_RFPs in-progress\ANP\ANP ON 1-Story Design\ANP Dist HQ 1Story Design Changes 26Oct07\Microstation Files\struct\AF0607E-SF04DT.dgn

NOTES:
1. FOR LEGENDS, ABBREVIATIONS AND STANDARD MECHANICAL DETAILS SEE SHEETS SM-1 AND SM-3.
2. FOR EQUIPMENT SCHEDULES AND CONTROL DIAGRAMS SEE SHEET SM-2.
3. PROVIDE EACH EXHAUST FAN WITH MANUFACTURER'S STANDARD EXHAUST GRILL AND GRAVITY BACKDRAFT DAMPER.
4. PROVIDE 400x400 SAND LOUVER WITH 50MM THICK WASHABLE METAL FILTERS.

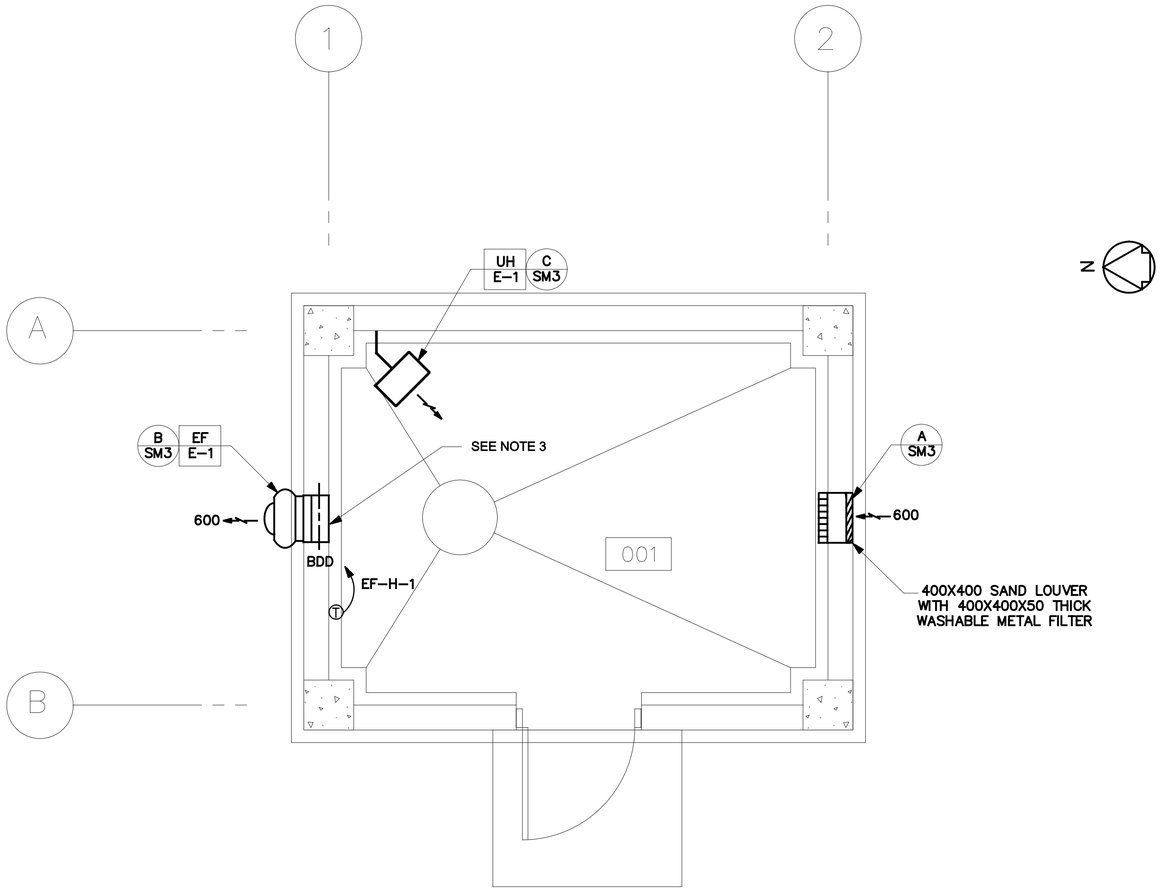

HVAC PLAN
SCALE= 1: 25

1 .50 0 1 1.5
1:25

UNLESS OTHERWISE NOTED, LINEAR DIMENSIONS SHOWN ARE IN MILLIMETERS.

SYMBOL	DESCRIPTION	DATE	APR

DESIGNED BY: RMS
DATE: 29 OCTOBER 2007
DWN BY: JMC
SUBMITTED BY:
CHK BY: SE
FILE NO.: AF0607E-MH01PN

US Army Corps of Engineers
Afghanistan Engineer District

AFGHANISTAN NATIONAL POLICE (ANP) DISTRICT HEADQUARTERS COMPOUNDS – 1 STORY HQ
VARIOUS LOCATIONS, AFGHANISTAN
WELL HOUSE
HVAC PLAN

SHEET REFERENCE NUMBER:
E
M-1

10/27/2007
S:\Engineering & Construction\Engineering\00_RFPs in-progress\ANP\ANP ON 1-Story Design\ANP Dist HQ 1Story Design Changes 26Oct07\Microstation Files\mech\AF0607E-MH01PN.dgn

NOTES:

1. FOR LEGEND AND ABBREVIATIONS SEE DRAWING SE-1.

2.COORDINATE LOCATION OF ALL ELECTRICAL FIXTURES AND EQUIPMENT WITH ALL OTHER TRADES.

3. FOR ONE LINE DIAGRAM SEE DRAWING E- 1, POWER PLANT.

4. ALL WIRING SHALL BE SURFACE MOUNTED IN METAL CONDUIT.

5. FOR EXACT LOCATION OF MECHANICAL EQUIPMENT SEE MECHANICAL DRAWINGS.

6. DESIGN IS BASED ON A 5 HP PUMP. IT IS CONTRACTOR'S RESPONSIBILITY TO DESIGN AND PROVIDE PROPERLY SIZED PUMP AS REQUIRED BY THE CONTRACT DOCUMENTS.

7. CONTRACTOR SHALL CONFIRM THAT ALL CIRCUIT RATINGS ARE BASED ON THE ACTUAL NAMEPLATE OF THE SUPPLIED EQUIPMENT.

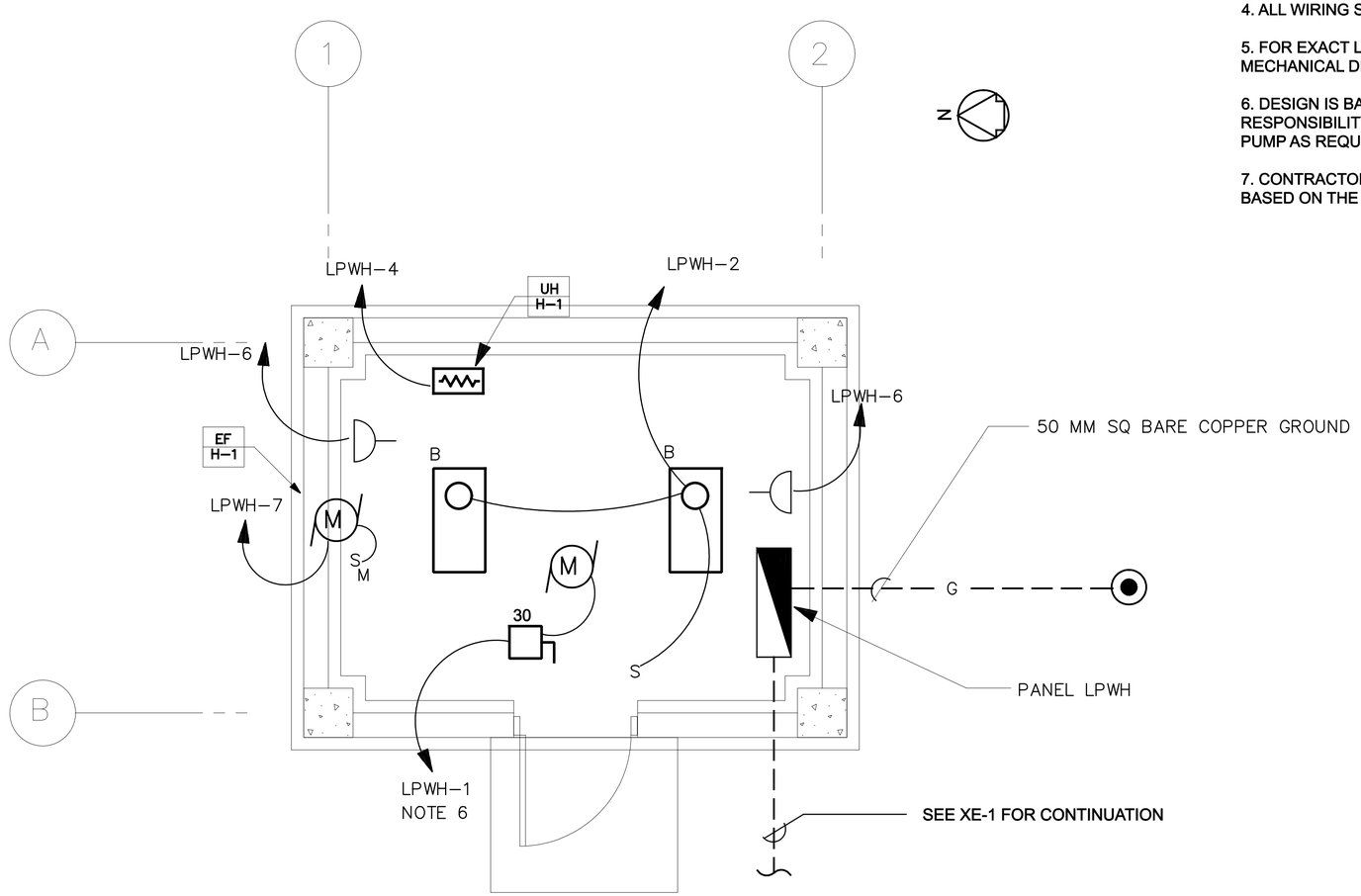

LIGHTING AND POWER PLAN

SCALE= 1:25

1 .50 0 1 1.5
1:25

UNLESS OTHERWISE NOTED, LINEAR DIMENSIONS SHOWN ARE IN MILLIMETERS.

SYMBOL	DESCRIPTION	DATE	APR

DESIGNED BY: MM
DWN BY: JMR
CHK BY: SE
DATE: 29 OCTOBER 2007
SUBMITTED BY:
FILE NO.: AF0607E-EL01PN

US Army Corps of Engineers
Afghanistan Engineer District

AFGHANISTAN NATIONAL POLICE (ANP) DISTRICT HEADQUARTERS COMPOUNDS – 1 STORY HQ
VARIOUS LOCATIONS, AFGHANISTAN
WELL HOUSE
LIGHTING AND POWER PLAN

SHEET REFERENCE NUMBER:
E
E-1

10/27/2007
S:\Engineering & Construction\Engineering\00_RFPs in-progress\ANP\ANP 01_1-Story Design\ANP Dist HQ 1Story Design Changes 26Oct07\Microstation Files\elec\AF0607E-01PN.dgn

PANELBOARD LPWH SURFACE MOUNTED MINIMUM 14,000 ASYM. A.I.C. MIN.

_____ AMP. MAIN LUGS (OR) 60 AMP. MAIN BREAKER W/ 60 AMP. TRIP

CIRCUIT BREAKER TYPE 380/220 VOLTS 3 PHASE 4 WIRE 100 AMP. BUS

CKT. NO.	TRIP AMPS	NO. POLES	WIRE MM2	GND MM2	CONDUIT MM	LOAD SERVED	LOAD-V.A.			LOAD-V.A.			LOAD SERVED	CONDUIT MM	GND 2 MM	WIRE 2 MM	NO. POLES	TRIP AMPS	CKT. NO.
							A0	B0	C0	A0	B0	C0							
1	40	1	6	6	25	WELL PUMP	6048			150			LIGHTING	20	4	4	1	20	2
3	20	1	4	4	20	EF-H-1	250	0			3000		ELECTRIC HEAT, UH-E-1	20	4	4	1	20	4
5	20	1				SPARE			0			360	RECEPTACLES	20	4	4	1	20	6
7						SPACE							SPARE				1	20	8
9						SPACE							SPACE						10
11						SPACE							SPACE						12
13						SPACE							SPACE						14
15						SPACE							SPACE						16
							6298	0	0	150	3000	360							

TOTAL CONN. LOAD 9.81 KVA 80 % DEMAND = ESTIMATED DEMAND LOAD: 7.85 KVA

TOTAL CONN. LOAD PER PHASE (KVA): A0 6.45 B0 3.00 C0 .36

SUPPLIED FROM POWER PLANT SWITCHBOARD(PPSB)

NOTES:

1. FOR LEGEND AND ABBREVIATIONS SEE DRAWING SE-1.
2. EMERGENCY LIGHT SHALL BE CONNECTED AHEAD OF LIGHT SWITCH.
3. FOR LIGHT FIXTURE SCHEDULE SEE DRAWING SE-1.
4. COORDINATE LOCATION OF ALL ELECTRICAL FIXTURES AND EQUIPMENT WITH ALL OTHER TRADES.
5. ALL WIRING SHALL BE IN CONCEALED OR SURFACE MOUNTED METAL CONDUIT.
6. FOR ONE LINE DIAGRAM SEE DRAWING D/E-1, POWER PLANT.
7. CONTRACTOR SHALL CONFIRM THAT ALL CIRCUIT RATING IS BASED ON THE ACTUAL NAME PLATE OF THE SUPPLIED EQUIPMENT.

UNLESS OTHERWISE NOTED, LINEAR DIMENSIONS SHOWN ARE IN MILLIMETERS.

SYMBOL	DESCRIPTION	DATE	APR

DESIGNED BY: MM | DATE: 29 OCTOBER 2007
DWN BY: JMR | SUBMITTED BY:
CHK BY: SE | FILE NO.: AF0607E-EL02SC

US Army Corps of Engineers
Afghanistan Engineer District

AFGHANISTAN NATIONAL POLICE (ANP) DISTRICT HEADQUARTERS COMPOUNDS – 1 STORY HQ
VARIOUS LOCATIONS, AFGHANISTAN
WELL HOUSE
ELECTRICAL SCHEDULES

SHEET REFERENCE NUMBER:
E
E-2

10/27/2007
S:\Engineering & Construction\Engineering\00_RFPs in-progress\ANP\ANP_ON_1-Story Design\ANP Dist HQ 1Story Design Changes 26Oct07\Microstation Files\elec\AF0607E-L02SC.dgn

ARCHITECTURAL ABBREVIATIONS AND SYMBOLS

ABBREVIATIONS

A

@	AT
AC	AIR CONDITIONER
ACCFLR	RAISED FLOOR SYSTEM
ACFT	AIRCRAFT
ACST	ACOUSTICAL
AD	AREA DRAIN
A/E	ARCHITECT/ENGINEERS
AFF	ABOVE FINISH FLOOR
ALUM	ALUMINUM
ANOD	ANODIZED
AOC	AIR OPERATIONS CENTER
APPROX	APPROXIMATELY
ARCH	ARCHITECTURAL
ASPH	ASPHALT
ATC	ACOUSTICAL TILE CEILING
AWP	ACOUSTICAL WALL PANEL

B

BB	BALL BEARING
BMUM	BITUMINOUS
BL	BASE LINE
BLDG	BUILDING
BLK	BLOCK
B/M	BENCH MARK OR BEAM
BOM	BILL OF MATERIALS
BRKT	BRACKET
BOT	BOTTOM
BRD	BOARD

C

CARP	CARPET
CB	CORE BORING
C TO C	CENTER TO CENTER
CEM	CEMENT
CH	CLEAR HEART
CFM	CUBIC FEET PER MINUTE
CI	CAST IRON
CIP	CAST IN PLACE
CJ OR CJT	CONTROL JOINT
℄	CENTER LINE
CLF	CHAIN LINK FENCE
CLG	CEILING
CLR	CLEAR
CM	CENTIMETER
CMDR	COMMANDER
CMP	CORRUGATED METAL PIPE
CMU	CONCRETE MASONRY UNIT
CO	CLEANOUT
COE	CORPS OF ENGINEERS
CONCR	CONCRETE
CONN	CONNECTION
CONST	CONSTRUCTION
CONT	CONTINUOUS
CONTAM	CONTAMINATED
CONTR	CONTRACTOR
CORR	CORRUGATED
CPRSR	COMPRESSOR
CT	CERAMIC TILE
CTR	CENTER
CUL	CULVERT
CUM	CUBIC METERS
CWT	COUNTERWEIGHT
COORD	COORDINATE

D

D	DEPTH
DECON	DECONTAMINATION
DET	DETAIL
DI	DRAIN INLET
DIA	DIAMETER
DIM	DIMENSION
DISP	DISPENSER
DJ	DUMMY JOINT
DRWG	DRAWING
DS	DOWNSPOUT
DW	DRINKING WATER

E

E	EAST
EA	EACH
EG	EXISTING GRADE
EJ	EXPANSION JOINT
EL OR ELEV	ELEVATION
ELEC	ELECTRICAL
ENCL	ENCLOSURE
ENGR	ENGINEER
ENT	ENTRANCE
EPDM	ELASTOMERIC ROOFING
EPX	EPOXY COATING
EQ	EQUAL
ES/EW	EMERGENCY SHOWER/EYE WASH
EW	EACH WAY
EXCA	EXCAVATE
EXH	EXHAUST
EXIST	EXISTING
EXP	EXPANSION OR EXPOSED
EWC	ELECTRIC WATER COOLER
EWH	ELECTRIC WATER HEATER

ABBREVIATIONS

F

F	FEET
FD	FLOOR DRAIN
FDN	FOUNDATION
FF & E	FURNITURE, FURNISHINGS AND EQUIPMENT
F TO F	FACE TO FACE
FE	FIRE EXTINGUISHER
FFLEL	FINISH FLOOR ELEVATION
FG	FINISH GRADE
FH	FIRE HYDRANT
FIN	FINISH
FL	FLOOR
FPM	FEET PER MINUTE
FTG	FOOTING

G

GA	GAUGE
GALV	GALVANIZED
GPM	GALLONS PER MINUTE
GR	GRADE
GT	GATE (FENCE)
GVL	GRAVEL
GYP	GYPSUM

H

HB	HOSE BIB
HDW	HARDWARE
HDWD	HARDWOOD
HZ	HERTZ
HF	HIGH FREQUENCY
HGT	HEIGHT
HM	HOLLOW METAL
HORIZ	HORIZONTAL
HP	HIGH POINT
HH	HEX HEAD
HC	HANDICAPPED
HR	HOUR

I

ID	INSIDE DIAMETER
INSTL	INSTALL
INTEL	INTELLIGENCE
INTER	INTERIOR
INV	INVERT
INSUL	INSULATION

J

JAN	JANITOR
JB	JUNCTION BOX
JCT	JUNCTION
JT	JOINT

K

KG	KILOGRAM
KM	KILOMETER
KPA	KILO PASCAL
KPH	KILOMETERS PER HOUR

L

LAM	LAMINATE
LAT	LATITUDE
LAV	LAVATORY
LBY	LOBBY
LBS	POUNDS
LG	LONG
LINMET	LINEAR METAL CEILING SYSTEM
LNRPNL	METAL LINER PANEL
LOC	LIMITS OF CONSTRUCTION
LONG	LONGITUDE
LP	LOW POINT
LSD	LARGE SCREEN DISPLAY
LTG P	LIGHTING PANEL
LVR	LOUVER

M

M	METER
MATL	MATERIAL
MAX	MAXIMUM
MECH	MECHANICAL
MH	MANHOLE
MISC	MISCELLANEOUS
MIN	MINIMUM
ML	MATCH LINE
MM	MILLIMETERS
MO	MASONRY OPENING
MON	MONUMENT
MOIST	MOISTURE
MPH	MILES PER HOUR
MTD	MOUNTED
MTL	METAL
MSNRY	MASONRY
MFR	MANUFACTURER
MATL	MATERIAL
MW	FORCE PROTECTION DOOR

ABBREVIATIONS

N

N	NORTH
NA	NOT APPLICABLE
NIC	NOT IN CONTRACT
NICAD	NICKEL CADMIUM
NO	NUMBER
NTS	NOT TO SCALE

O

OC	ON CENTER
OD	OUTSIDE DIAMETER
OPH	OPPOSITE HAND
OPNG	OPENING
OPP	OPPOSITE
OPS	OPERATIONS

P

PANL	PANEL
PCS	PIECES
PE	POLYETHYLENE
PKG	PARKING OR PACKAGE
PL	PLATE
PLAS	PLASTER
PLBG	PLUMBING
POL	PETROLEUM OIL LUBRICANT
PP	POWER PANEL
PRCST	PRECAST
PROP	PROPERTY
PSF	POUNDS PER SQUARE FOOT
PTD	PAINTED
PTR	PIPE TRENCH
PVMT	PAVEMENT

Q

Q	DESIGN DISCHARGE
QD	QUICK DISCONNECT

R

R	RADIUS OR REINFORCED
RCP	REINFORCED CONCRETE PIPE
RD	ROOF DRAIN
RE	REFERENCE
REINF	REINFORCED
REQD	REQUIRED
REV	REVISION
RH	RIGHT HAND
RI	RISER
RM	ROOM
RO	ROUGH OPENING
ROW	RIGHT OF WAY
RP	RADIUS POINT
RR	RAILROAD
RT	RIGHT
RTU	ROOF TOP UNIT
RVS	REVERSE
RW	RAW WATER

S

S OR SO	SOUTH
SCH	SCHEDULE
SECT	SECTION
SD	SMOKE DETECTOR
SG	SUB GRADE
SH OR SHT	SHEET
SHWR	SHOWER
SIM	SIMILIAR
SL	SLOPE
SMH	SEWER MANHOLE
SOC	STRATEGIC OPERATIONS CENTER
SPEC	SPECIFICATION
SPFC	SPECIFIC
SQ	SQUARE
SS	SANITARY SEWER
SST	STAINLESS STEEL
STA	STATION
STD	STANDARD
STL	STEEL
STRUCT	STRUCTURAL
SUSPLAS	SUSPENDED PLASTER
SVC	SERVICE CONNECTION

ABBREVIATIONS

T

TC	TOP OF CURB
TELE C	TELEPHONE CABINET
TER	TERRAZZO
TG	TOP OF GRATE
TK	TANK
TO	TECHNICAL ORDER
TOS	TOP OF STEEL
TOW	TOP OF WALL
TP	TEST PIT
TR	TRENCH
TSW	TOP OF SIDEWALK
TYP	TYPICAL
TP	TOP OF PAVEMENT
TH/THK	THICK / THICKNESS

U

UBC	UNIFORM BUILDING CODE
UG	UNDERGROUND
UNO	UNLESS NOTED OTHERWISE
UPS	UNINTERRUPTIBLE POWER SUPPLY
UTIL	UTILITY

V

VB	VALVE BOX
VC	VERTICAL CURVE
VCT	VINYL COMPOSITION TILE
VEH	VEHICLE
VEL	VELOCITY
VERT	VERTICAL
VEST	VESTIBULE
VIP	VERY IMPORTANT PERSON
VTR	VENT THRU ROOF

W

W	WEST, WIDE
WC	WATER CLOSET
WM	WIRE MESH PARTITION
WSP	WELDED STEEL PIPE
WT	WEIGHT
W/O	WITHOUT
W/	WITH
WWF	WELDED WIRE FABRIC

REFERENCE SYMBOLS

A / A-1 A-2	DETAIL IDENTIFICATION NO.OF SHEET ON WHICH DETAIL IS DRAWN NO. OF SHEET ON WHICH CONDITION IS REFERENCED
1 / A-3	BUILDING SECTION IDENTIFICATION NO.OF SHEET ON WHICH SECTION IS DRAWN
A / A-3	WALL SECTION IDENTIFICATION NO.OF SHEET ON WHICH SECTION IS DRAWN
102	ROOM NUMBER
102	DOOR NUMBER
H	COLUMN LINE
A	WINDOW TYPE
A	WALL TYPE IDENTIFIER
102	EQUIPMENT IDENTIFIER
102	FURNITURE IDENTIFIER
FIN FL ELEV 100.00	FINISH FLOOR EL. SYMBOL IN PLAN
FIN FL ELEV 100.00	FINISH FLOOR EL. SYMBOL IN SECT. AND ELEV.
A B C D	INTERIOR ELEVATION KEY SYMBOL
A / A-3	EXTERIOR ELEVATION IDENTIFIER
	STUCCO CONTROL JOINT
L2	LOUVER IDENTIFIER
	STRUCTURAL CONTROL JOINT
	WALLS TO THE UNDERSIDE OF THE STRUCTURE
F	FIRE EXTINGUISHER

MATERIAL SYMBOLS

	EARTH
	CAST CONCRETE (SECTION)
	LIGHTWEIGHT CONCRETE (SECTION)
	CONCRETE MASONRY UNIT (LARGE SCALE-PLAN)
	STEEL
	ROUGH WOOD
	FINISHED WOOD
	WOOD BLOCKING
	PLYWOOD-LARGE SCALE
	GLASS (ELEVATION)
	BATT FILL INSULATION (SECTION)
	LOOSE FILL INSULATION (PLAN)
	RIGID BOARD INSULATION
	CERAMIC TILE-LARGE SCALE
	CONCRETE (PLAN & ELEVATION)
	CERAMIC TILE (PLAN & ELEVATION)
	PLASTER OR STUCCO (ELEVATION)
	SHEET MEMBRANE
	LANDSCAPING (TREE, SHRUB, ETC.)

GENERAL NOTES:

1. THE LIST OF ABBREVIATIONS IS SHOWN AS A GUIDE ONLY AND DOES NOT NECESSARILY INCLUDE ALL ABBREVIATIONS USED. OTHER ABBREVIATIONS MAY BE FOUND AMONG THE DRAWINGS. SOME ABBREVIATIONS LISTED MAY NOT HAVE BEEN USED.
2. FOR REFERENCE PURPOSES, A FINISHED FLOOR ELEVATION OF 100.00 HAS BEEN ESTABLISHED FOR GRADE LEVEL FLOOR PLANS. ON ARCHITECTURAL DRAWINGS. SEE CIVIL DRAWINGS FOR ACTUAL FINISHED FLOOR AND FINISHED GRADE ELEVATIONS.
3. HOUSEKEEPING PADS FOR MECHANICAL EQUIPMENT SHALL BE PROVIDED AS REQUIRED BY MECHANICAL DRAWINGS. SIZE AND LOCATION SHALL BE COORDINATED WITH MECHANICAL EQUIPMENT PROVIDED.

UNLESS OTHERWISE NOTED, LINEAR DIMENSIONS SHOWN ARE IN MILLIMETERS.

SYMBOL	DESCRIPTION	DATE	APR

DESIGNED BY: SH
DATE: 29 OCTOBER 2007
DWN BY: JSG
SUBMITTED BY:
CHK BY: YSK
FILE NO.:

US Army Corps of Engineers
Afghanistan Engineer District

AFGHANISTAN NATIONAL POLICE (ANP) DISTRICT HEADQUARTERS COMPOUNDS – 1 STORY HQ
VARIOUS LOCATIONS, AFGHANISTAN
STANDARD DETAILS
ABBREVIATIONS AND SYMBOLS

SHEET REFERENCE NUMBER:
SA–1

10/24/2007
S:\Engineering & Construction\Engineering\00_RFPs in-progress\ANP\ANP ON 1-Story Design\AN Dist HQ 1Story Design Changes 26OCT07\Microstation Files\arch\AF060075R01GN.dgn

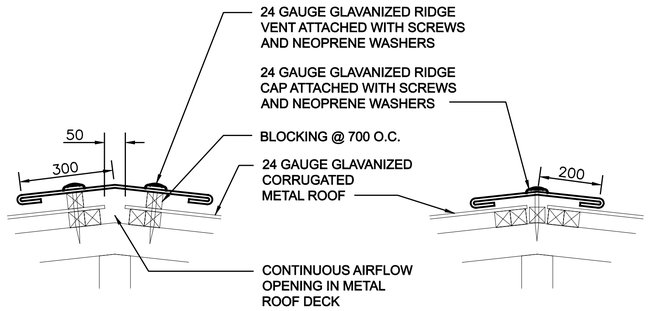

TYPICAL RIDGE VENT SECTION
NOT TO SCALE

TYPICAL RIDGE CAP SECTION
NOT TO SCALE

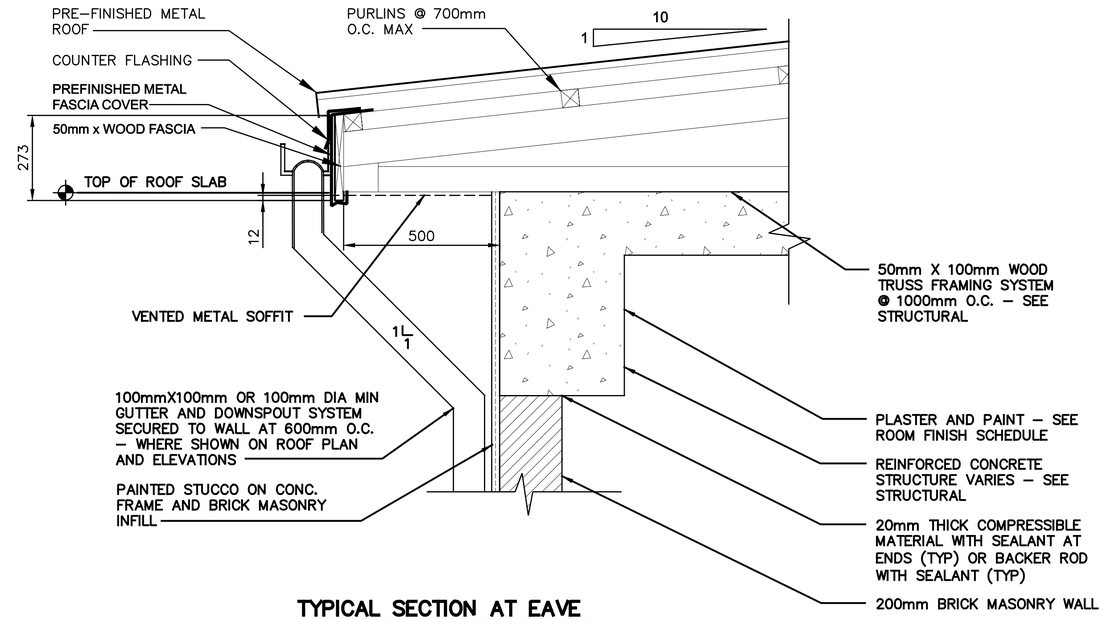

TYPICAL SECTION AT EAVE
FOR BUILDINGS C, D, H, AND I
SCALE= 1:10

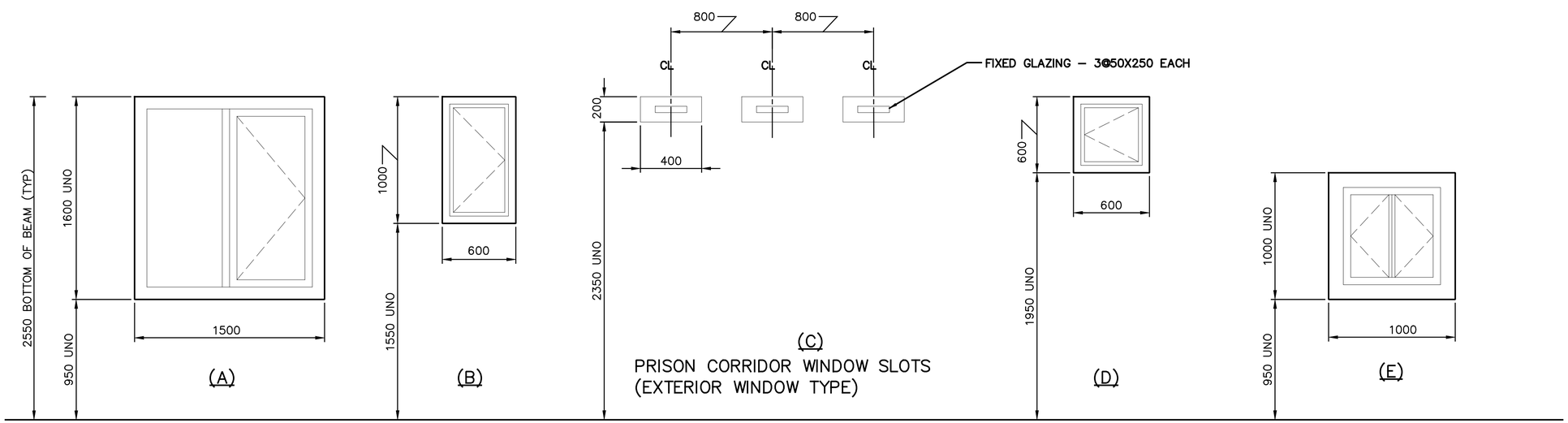

NOTES:
1. ALL EXTERIOR WINDOWS SHALL UTILIZE MIN. 8mm THICK PLEXIGLASS.
2. PROVIDE PROTECTIVE COATING AT ALL DISSIMILAR METALS CONTACT AREAS, AS APPROPRIATE.
3. ALL OPERABLE EXTERIOR WINDOWS SHALL BE PROVIDED WITH INSECT SCREENS.
4. FIXED WINDOWS AND CLEARSTORY WINDOWS ARE SHOWN ON BUILDING ELEVATIONS AND SECTIONS.

0 .50 1.00
1:10

UNLESS OTHERWISE NOTED, LINEAR DIMENSIONS SHOWN ARE IN MILLIMETERS.

SYMBOL	DESCRIPTION	DATE	APR

DESIGNED BY: SH
DATE: 29 OCTOBER 2007
DWN BY: JLK
SUBMITTED BY:
CHK BY: JLK
FILE NO.: AF06073-AR02DT

US Army Corps of Engineers
Afghanistan Engineer District

AFGHANISTAN NATIONAL POLICE (ANP) DISTRICT HEADQUARTERS COMPOUNDS – 1 STORY HQ
VARIOUS LOCATIONS, AFGHANISTAN
STANDARD DETAILS
WALL SECTION AND ROOF DETAILS

SHEET REFERENCE NUMBER:
SA–2

10/24/2007
S:\Engineering & Construction\Engineering\00_RFPs in-progress\ANP\ANP ONE-Story Design\ANP Dist HQ 1Story Design Changes 26Oct07\Microstation files\arch\AF06073AR02DT.dgn

GENERAL NOTES

GENERAL

1. DESIGN REFERENCES:
   A. AMERICAN CONCRETE INSTITUTE (ACI) BUILDING CODE REQUIREMENTS OR REINFORCED CONCRETE (ACI 318).
   B. SPECIFICATION FOR STRUCTURAL STEEL BUILDINGS – ALLOWABLE STRESS DESIGN AND PLASTIC DESIGN (S335).
   C. AMERICAN WELDING SOCIETY (AWS) STRUCTURAL WELDING CODE – STEEL (AWS D 1.1).
   D. MASONRY STRUCTURAL DESIGN FOR BUILDINGS (TM–809–3).
   E. STEEL DECK INSTITUTE (SDI) DESIGN MANUAL FOR COMPOSITE DECKS, FORM DECKS, AND ROOF DECKS.
2. DIMENSIONS PROVIDED IN SECTIONS OR DETAILS AND ON PLAN AND ELEVATION VIEWS ARE SHOWN USING MILLIMETERS. UNLESS OTHERWISE NOTED.
3. ALL BUILDING ELEVATIONS ARE GIVEN AS REFERENCE ELEVATIONS TO THE FINISHED GROUND FLOOR ELEVATION. A REFERENCE FLOOR ELEVATION OF 0.000 IS USED FOR THE FINISHED GROUND FLOOR.
4. CONTRACTOR SHALL VERIFY ALL DIMENSIONS AND CONDITIONS AFFECTING THE WORK AT THE JOB SITE.
5. ALL STRUCTURAL WORK AND MATERIALS SHALL CONFORM TO THE REQUIREMENTS OF THE PROJECT SPECIFICATIONS.
6. DO NOT SCALE DRAWINGS.
7. FOR LOCATION AND DIMENSIONS OF PARTITIONS, DEPRESSIONS, GROOVES, SLEEVES, CURBS, OPENINGS, EMBEDDED OR ATTACHED ITEMS, REFER TO ARCHITECTURAL, MECHANICAL, ELECTRICAL, AND PLUMBING DRAWINGS.
8. FOR ADDITIONAL INFORMATION REFER TO INDIVIDUAL SHEETS FOR EACH STRUCTURE.
8 FOR ADDITIONAL INFORMATION REFER TO INDIVIDUAL SHEETS FOR EACH STRUCTURE.
9. METAL BUILDING SYSTEMS SHALL BE AS REQUIRED ON THE DRAWINGS AND NOTES.
10. FOOTING ELEVATIONS GIVEN ARE AT TOP OF FOOTING BASE.
11. ALL FOOTING EXCAVATIONS SHALL BE INSPECTED AND APPROVED BY THE CONTRACTING OFFICER OR HIS APPROVED AGENT PRIOR TO PLACING CONCRETE.

CONCRETE

1. EMBEDDED MATERIAL:
   A. BEFORE PLACING CONCRETE, CARE SHALL BE TAKEN TO INSURE THAT ALL EMBEDDED ITEMS ARE IN POSITION AND SECURELY FASTENED IN PLACE.
   B. ELECTRIC CONDUITS AND PIPING TO BE EMBEDDED IN CONCRETE SHALL MEET THE APPLICABLE REQUIREMENTS OF ACI 318.
   C. WATERSTOPS, WHERE REQUIRED, SHALL BE MADE CONTINUOUS. ALL PROJECTING WATERSTOPS SHALL BE SUPPORTED AND PROTECTED FROM DAMAGE DURING CONSTRUCTION.
2. PROVIDE 20 MILLIMETER CHAMFER FOR ALL EXPOSED EDGES OF COLUMNS, BEAMS, WALLS AND ANY OTHER MEMBERS AS DIRECTED BY THE CONTRACTING OFFICER.
3. PROVIDE APPROPRIATE DEPRESSIONS IN SLABS FOR TILE OR OTHER SIMILAR MATERIALS. MAINTAIN FULL SLAB THICKNESS BELOW THESE DEPRESSIONS. SEE ARCHITECTURAL INTERIOR FINISH SCHEDULES, FLOOR PLANS, AND DETAILS FOR REQUIRED DEPRESSIONS.
4. JOINTS SHALL BE LOCATED IN ACCORDANCE WITH ACI–318.
5. FOR SLABS ON GRADE, CONTROL JOINTS SHALL BE LOCATED NOT MORE THAN 7.6 METERS APART IN EITHER DIRECTION UNLESS OTHERWISE NOTED.
6. CONSTRUCTION JOINTS FOR STRUCTURAL SLABS, BEAMS AND GIRDERS SHALL BE LOCATED WITHIN THE MIDDLE THIRD OF THEIR SPAN. JOINTS IN GIRDERS SHALL BE OFFSET A MINIMUM DISTANCE OF TWO TIMES THE WIDTH OF AN INTERSECTING BEAM.
7. A SET OF DRAWINGS SHOWING CONCRETE PLACING SEQUENCE AND LOCATION OF JOINTS SHALL BE SUBMITTED TO THE CONTRACTING OFFICER FOR APPROVAL PRIOR TO PREPARATION OF AFFECTED REINFORCING SHOP DRAWINGS.
8. ALL REINFORCING BARS SHALL BE PLACED IN ACCORDANCE WITH ACI BUILDING CODE (ACI–318).
9. ALL REINFORCING BARS SHALL BE DEFORMED BILLET–STEEL CONFORMING TO ASTM A 615, GRADE 60, OR APPROVED EQUAL WITH THE FOLLOWING MINIMUM REQUIREMENTS: MINIMUM YIELD STRENGTH 413 MPa (60000 PSI).
10. WELDED WIRE FABRIC SHALL BE COLD DRAWN CONFORMING TO ASTM A–185, GRADE 60, OR APPROVED EQUAL WITH THE FOLLOWING MINIMUM REQUIREMENTS: MINIMUM YIELD STRENGTH 413 MPa. (60000 PSI)
11. DETAILING OF REINFORCEMENT SHALL BE IN ACCORDANCE WITH THE LATEST ACI MANUAL FOR DETAILING (SP–66).
12. DIMENSIONS AND SPACING OF BARS ARE IN MILLIMETERS UNLESS OTHERWISE NOTED. THUS, f920@300.
13. CONCRETE SHALL HAVE A MINIMUM 28 DAY COMPRESSIVE STRENGTH OF 28 MPa (4,000 PSI) AND CONTAIN ASTM C–150 TYPE I CEMENT UNLESS OTHERWISE NOTED.
14. REINFORCEMENT MAY BE MOVED WITH APPROVAL OF THE CONTRACTING OFFICER TO CLEAR PIPES, SEALS, RECESSES, EMBEDDED METALWORK, AND CONDUITS.
15. CLEAR CONCRETE COVER FOR REINFORCING BARS IN CAST–IN–PLACE CONCRETE SHALL BE PROVIDED AS FOLLOWS, UNLESS OTHERWISE NOTED:
    A. FOOTINGS OR BEAMS CAST AGAINST AND PERMANENTLY EXPOSED TO EARTH 75mm.
    B. FORMED SURFACES EXPOSED TO WEATHER OR EARTH:
       (1).f916 BARS OR SMALLER 40mm
       (2).ALL OTHERS 50mm
    C. FORMED SURFACES NOT EXPOSED DIRECTLY TO WEATHER OR EARTH:
       (1). SLABS, WALLS 20mm
       (2). BEAMS, GIRDERS, COLUMNS: PRINCIPAL REINFORCEMENT, TIES OR STIRRUPS 40mm
16. REFER TO DWG SS–4 FOR CONSTRUCTION JOINT (CJ) AND CONTROL JOINT (CJT) DETAILS.
17. REINFORCING BARS SHALL NOT BE BENT OR STRAIGHTENED IN A MANNER THAT WILL INJURE THE MATERIAL. BARS WITH KINKS OR IMPROPER BENDS SHALL NOT BE USED.
18. THE FIRST AND LAST BAR IN SLABS AND WALLS SHALL BE PLACED A MAXIMUM OF ONE–HALF OF THE BAR SPACING SHOWN UNLESS OTHERWISE NOTED.
19. THE CLEAR DISTANCE BETWEEN PARALLEL BARS IN A LAYER SHALL NOT BE LESS THAN THE NOMINAL DIAMETER OF THE BAR, NOR 33mm, THE CLEAR DISTANCE BETWEEN LONGITUDINAL BARS IN COLUMNS SHALL NOT BE LESS THAN 1.5 TIMES THE NOMINAL BAR DIAMETER NOR 40mm.
20. PROVIDE 1–f912 REBAR IN MID – DEPTH OF SLAB AT ALL RE–ENTRANT CORNERS.
21. PROVIDE SEALANT AT ALL CONTROL AND ISOLATION JOINTS. WHERE CONCRETE SLAB WORK WILL NOT BE COVERED BY SOME OTHER FINISH FLOOR MATERIAL PROVIDE TOOLED CONTROL JOINTS HAVING A RADIUS OF 3 MILLMETERS.
22. ALL CMU WALLS SHALL BE REINFORCED AS SHOWN ON THE DRAWINGS.

STRUCTURAL STEEL

1. ALL METAL WORK SHOWN ON DRAWINGS SHALL BE FABRICATED OF STRUCTURAL STEEL UNLESS OTHERWISE NOTED.
2. DESIGN OF STRUCTURAL STEEL WORK SHALL BE IN ACCORDANCE WITH THE REQUIREMENTS OF THE SPECIFICATION FOR STRUCTURAL STEEL BUILDINGS–ALLOWABLE STRESS DESIGN AND PLASTIC DESIGN (S335).
3. **ALL WELDING SHALL BE IN ACCORDANCE WITH THE APPLICABLE REQUIREMENTS OF THE CURRENT AWS, D1.1, STRUCTURAL WELDING CODE–STEEL.**
4. WHERE WELD SIZE IS NOT CALLED OUT, USE AISC MINIMUM SIZE.
5. STRUCTURAL STEEL SHALL CONFORM TO THE REQUIREMENTS OF ASTM A500, GRADE B OR STRUCTURAL TUBING AND ASTM A36 FOR OTHER STRUCTURAL SHAPES (UNLESS OTHERWISE NOTED).
6. ALL BOLTED CONNECTIONS SHALL BE BEARING TYPE CONNECTIONS MADE WITH 19 DIAMETER BOLTS MEETING REQUIREMENTS OF ASTM A325, TYPE X (UNLESS NOTED OTHERWISE)
7. SHOP CONNECTIONS MAY BE EITHER BOLTED OR WELDED. ALL FIELD CONNECTIONS SHALL BE BOLTED UNLESS OTHERWISE SHOWN ON THE DRAWINGS.
8. UNLESS OTHERWISE NOTED BEAM END CONNECTIONS SHALL COMFORMTO A.I.S.C. STANDARD TWO ANGLE WEB CONNECTIONS. WHETHER BOLTED OR WELDED, EACH END CONNECTION SHALL BE CAPABLE OF SUPPORTING ONE–HALF THE TOTAL UNIFORM LOAD CAPACITY SHOWN IN THE ALLOWABLE UNIFORM LOAD TABLES, PART II , OF THE A.I.S.C. MANUAL OF STEEL CONSTRUCTION. HOLES WILL BE SHORT–SLOTTED IN THE OUTSTANDING ANGLE LEGS (THOSE CONNECTED TO THE SUPPORTING MEMBER) AND STANDARD OTHERWISE.
9. NO CONNECTION SHALL CONSIST OF LESS THAN 2–f919 BOLTS OR A WELD CAPABLE OF RESISTING 2720 KILOGRAMS.
10. ALL ANCHOR BOLTS SHALL BE ASTM A36, EXCEPT AS OTHERWISE NOTED.
11. STRUCTURAL STEEL DESIGN IS BASED ON ALLOWABLE STRESS DESIGN.

LEGENDS AND NOTATIONS: (UNLESS OTHERWISE NOTED)

A. PLATE SIZES ARE GIVEN IN MILLIMETERS. THUS, PL 200 x 600 X 10

B. ROLLED STEEL SHAPES ARE INDICATED BY AISC METRIC NOTATION THUS, W200 x 150.

C. ANGLE SIZES ARE GIVEN IN MILLIMETERS. THUS, ∟100 x 100 x 10 x 600 LG.

D. WELDING NOTATION SIZE, LENGTH AND SPACING ARE GIVEN IN MILLIMETERS WITH SYMBOLS IN ACCORDANCE WITH AWS.

E. BOLT SIZE DIAMETERS ARE GIVEN IN MILLIMETERS. LENGTH IS GIVEN IN MILLIMETERS. THUS, f919 X 300 LG.

ABBREVIATIONS

A.B.	ANCHOR BOLT
ADD	ADDED OR ADDITIONAL
AFF	ABOVE FINISH FLOOR
ARCH	ARCHITECTURAL
@	AT THE RATE OF
BM	BEAM
BRG	BEARING
B OR BOT	BOTTOM
℄	CENTERLINE
CONC	CONCRETE
CJ	CONTROL JOINT
CJT	CONSTRUCTION JOINT
CIP	CAST–IN–PLACE
COL	COLUMN
CONT	CONTINUOUS
DIA OR ∅	DIAMETER
DIR	DIRECTION
DWG	DRAWING
EE	EACH END
EF	EACH FACE
⊕ OR ELEV	ELEVATION
ES	EACH SIDE
EW	EACH WAY
EJT	EXPANSION JOINT
FF	FAR FACE
FTG	FOOTING
FDN	FOUNDATION
GB	GRADE BEAM
H OR HORZ	HORIZONTAL
HP	HIGH POINT
IJ	ISOLATION JOINT
JT	JOINT
KSM	KILOGRAMS PER SQUARE METER
LG	LONG
LL	LOWER LAYER
LP	LOW POINT
MCJ	MASONRY CONTROL JOINT
M	METERS
MM	MILLIMETERS
MAX	MAXIMUM
MECH	MECHANICAL
MIN	MINIMUM
NF	NEAR FACE
NO OR #	NUMBER
NTS	NOT TO SCALE
O/C	ON CENTER
OPNG	OPENING
PC	PRECAST
PEJ	PREMOLDED EXPANSION JOINT
PL	PLATE
PSF	POUNDS PER SQUARE FOOT
PSI	POUNDS PER SQUARE INCH
REINF	REINFORCEMENT
REF	REFERENCE
REQ	REQUIRED
SCH	SCHEDULE
SHT	SHEET
SIM	SIMILAR
STD	STANDARD
SQ	SQUARE
T	TOP
TB	TIE BEAM
T & B	TOP AND BOTTOM
TOC	TOP OF CONCRETE
TOF	TOP OF FOOTING
TOS	TOP OF SLAB OR TOP OF STEEL
TYP	TYPICAL
UL	UPPER LAYER
UNO	UNLESS NOTED OTHERWISE
VERT	VERTICAL
WWF	WELDED WIRE FABRIC
WP	WORKING POINT
W/	WITH

UNLESS OTHERWISE NOTED, LINEAR DIMENSIONS SHOWN ARE IN MILLIMETERS.

SYMBOL	DESCRIPTION	DATE	APR

DESIGNED BY: TCP | DATE: 29 OCTOBER 2007
DWN BY: TCP | SUBMITTED BY:
CHK BY: KGO | FILE NO.: AF06073–SB01GN

US Army Corps of Engineers
Afghanistan Engineer District

AFGHANISTAN NATIONAL POLICE (ANP) DISTRICT HEADQUARTERS COMPOUNDS – 1 STORY HQ
VARIOUS LOCATIONS, AFGHANISTAN
STANDARD DETAILS
GENERAL NOTES AND ABBREVIATIONS

SHEET REFERENCE NUMBER:
SS–1

10/24/2007 S:\Engineering & Construction\Engineering\00_RFPs in-progress\ANP\ANP ONE-Story Design\ANP Dist HQ 1Story Design Changes 26Oct07\Microstation Files\struct\AF06073_SB01GN.dgn

SPLICES

LOCATION OF SOME SPLICES ARE SHOWN ON DRAWINGS. SPLICES NOT SHOWN ON DRAWINGS SHALL BE IN ACCORDANCE WITH THE APPLICABLE REQUIREMENTS FOR DETAILING REINFORCEMENT AND AS APPROVED BY THE CONTRACTING OFFICER.

WHEN REINFORCEMENT OF DIFFERENT SIZE SPLICES, THE LAP LENGTH IS GOVERNED BY THE SMALLER BAR UNLESS NOTED OTHERWISE.

WALL AND SLAB REINFORCEMENT SPLICES ARE TO BE MADE SO THAT REQUIRED CLEARANCES ARE MAINTAINED.

TENSION LAP SPLICES		
AS (PROVIDED) / AS (REQUIRED)	MAXIMUM % OF REBARS SPLICED WITHIN REQ. LAP LENGTH	
	50	100
EQUAL TO OR GREATER THAN 2	CLASS A	CLASS B
LESS THAN 2	CLASS B	CLASS B

TENSION LAP SPLICE LENGTH SHALL BE AS FOLLOWS:

FOR CLASS "A" SPLICES 1.0 ld
FOR CLASS "B" SPLICES 1.3 ld

WHERE ld IS THE BASIC TENSION DEVELOPMENT LENGTH.

BASIC TENSION DEVELOPMENT ld (mm)& TENSION DOWEL EMBEDMENT LENGTH

CONCRETE	TYPE OF BARS	BAR SIZE								
		#3	#4	#5	#6	#7	#8	#9	#10	#11
28 MPa (4000 PSI)	TOP BARS	400	500	600	700	800	1000	1200	1600	2000
	OTHER	300	400	450	600	600	750	950	1200	1500

NOTES:

1. FOR BARS WITH CLEAR SPACING NOT LESS THAN 5X BAR DIAMETER AND WITH COVER FROM FACE OF MEMBER TO EDGE BARS, MEASURED IN THE PLANE OF THE BARS, NOT LESS THAN 2.5X BAR DIAMETER USE 0.8ld, BUT THE LAP SPLICE LENGTH SHALL NOT BE LESS THAN 300MM.
2. TOP BARS ARE HORIZONTAL AND INCLINED REINFORCING BARS SO PLACED THAT MORE THAN 300MM. OF CONCRETE IS CAST IN THE MEMBER BELOW THE BARS.

STANDARD COMPRESSION LAP SPLICE LENGTH (MM)

BAR SIZE	#3	#4	#5	#6	#7	#8	#9	#10	#11
SPLICE LENGTH	300	380	480	580	660	760	860	960	1070

BASIC COMPRESSION DEVELOPMENT (MM) & COMPRESSION DOWEL EMBEDMENT LENGTH

CONCRETE	BAR SIZE								
	#3	#4	#5	#6	#7	#8	#9	#10	#11
28 MPa (4000 PSI)	200	250	300	360	420	480	550	610	680

ALL BARS MARKED CONTINUOUS SHALL BE PROPERLY LAPPED AT SPLICES AND CORNERS AND HOOKED AT NON-CONTINUOUS ENDS.

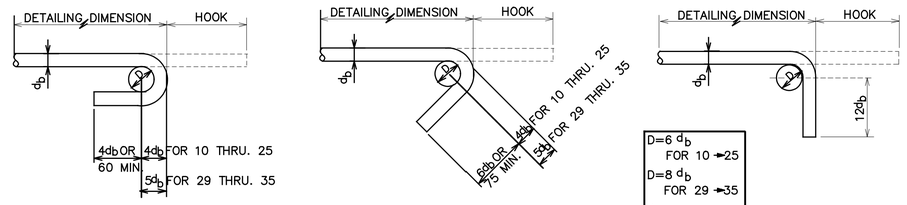

D=6 db FOR 10 → 25
D=8 db FOR 29 → 35
db = BAR DIA.

BAR BENDING DETAILS

DESIGN LOADS

SERVICE LOADS

DEAD ----------CALCULATED
LIVE ----------REFER TO INDIVIDUAL SHEETS

WIND LOAD

BASIC WIND VELOCITY IS 125 KM/H

EARTHQUAKE:

SITE SEISMICITY:
Ss = 1.65g, S1 = 0.75g

EQUIVALENT REINFORCING BAR SIZE CHART

ACI DESIGNATION	METRIC DIAMETER (MM)
#3	10
#4	13 (ø12 ACCEPTABLE)
#5	16
#6	19 (ø20 ACCEPTABLE)
#7	22
#8	25
#9	29
#10	32
#11	35

EQUIVALENT STEEL FABRIC SIZE CHART

WIRE REINFORCING INSTITUTE DESIGNATION	METRIC SIZES (MM)	
	WIRE SPACING	WIRE DIAMETER
6 X 6 – W2.9 X W2.9	150 X 150	5.0 X 5.0

FILLET WELD STRENGTH *

SIZE INCHES	STRENGTH KIPS/INCH
1/8	1.86
3/16	2.78
1/4	3.71
5/16	4.64
3/8	5.57
7/16	6.50
1/2	7.42
9/16	8.35

* AWS A5.1 OR A5.5 E70 XX ELECTRODES FOR A36 MATCHING BASE MATERIAL

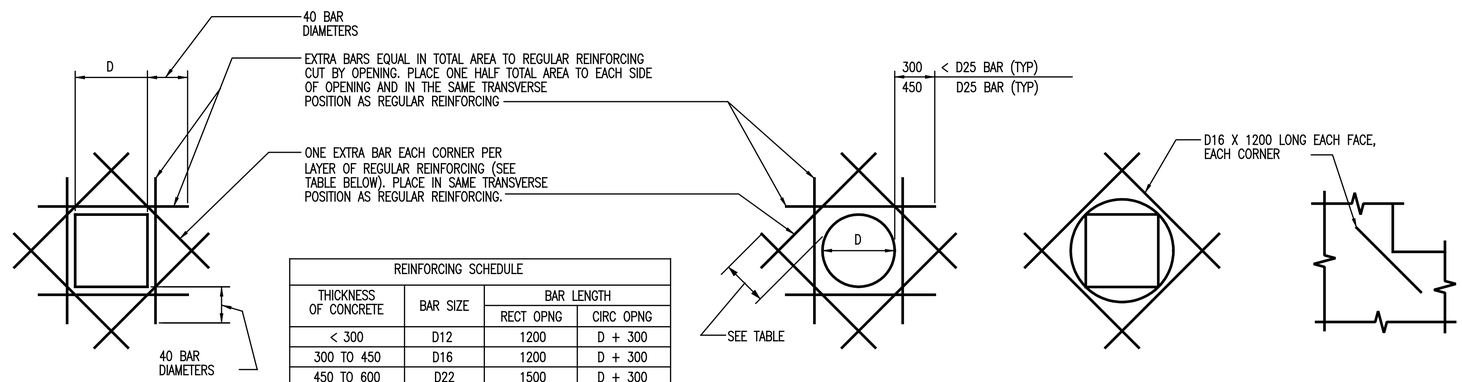

REINFORCING SCHEDULE			
THICKNESS OF CONCRETE	BAR SIZE	BAR LENGTH	
		RECT OPNG	CIRC OPNG
< 300	D12	1200	D + 300
300 TO 450	D16	1200	D + 300
450 TO 600	D22	1500	D + 300
> 600	D25	1800	D + 450

RECTANGULAR OPENINGS

CIRCULAR OPENINGS

FOR OPENINGS 500 AND SMALLER IN DIAMETER OR DIAGONAL

ISOLATED RE-ENTRANT CORNERS

FOR OPENING LARGER THAN 500 IN DIAMETER OR DIAGONAL

TYPICAL EXTRA REINFORCING AT OPENINGS IN WALLS AND SLABS

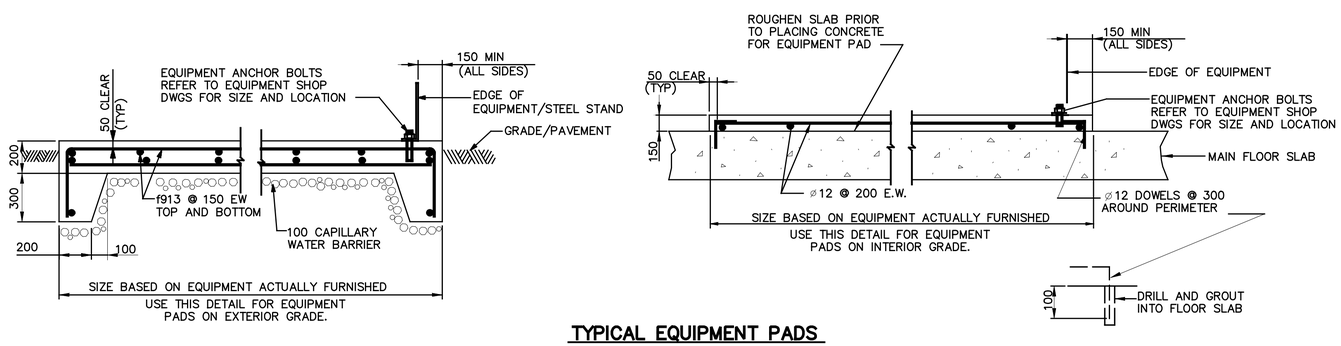

TYPICAL EQUIPMENT PADS

NOT TO SCALE

UNLESS OTHERWISE NOTED, LINEAR DIMENSIONS SHOWN ARE IN MILLIMETERS.

SYMBOL	DESCRIPTION	DATE	APR

DESIGNED BY: KGO
DATE: 29 OCTOBER 2007
DWN BY: KGO
SUBMITTED BY:
CHK BY: KMP
FILE NO.: AF060713-SB02DT

US Army Corps of Engineers
Afghanistan Engineer District

AFGHANISTAN NATIONAL POLICE (ANP) DISTRICT HEADQUARTERS COMPOUNDS – 1 STORY HQ
VARIOUS LOCATIONS, AFGHANISTAN
STANDARD DETAILS
STANDARD DETAILS

SHEET REFERENCE NUMBER:
SS–2

10/24/2007
S:\Engineering & Construction\Engineering\00_RFPs in-progress\ANP\ANP ON-Story Design\ANP Dist HQ 1Story Design Changes 26OCT07\Microstation Files\struct\AF060713-SB02DT.dgn

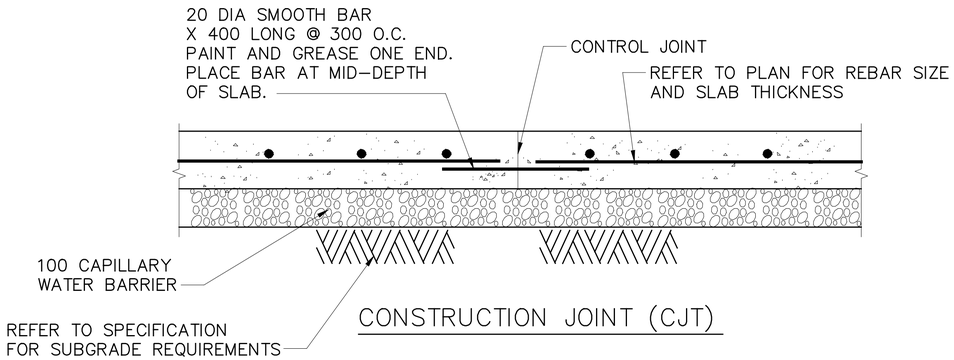

CONSTRUCTION JOINT (CJT)

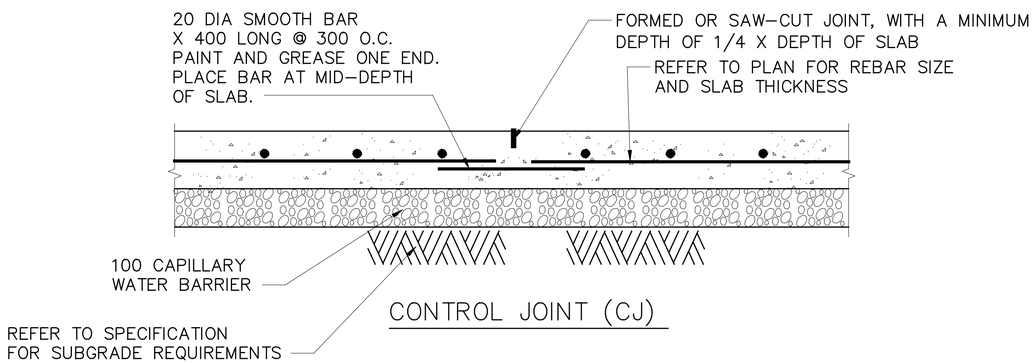

CONTROL JOINT (CJ)

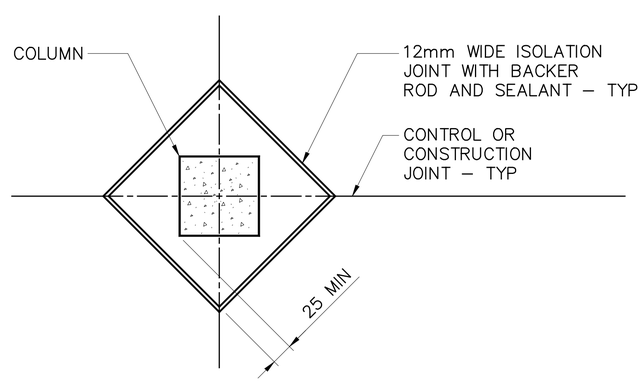

TYPICAL ISOLATION JOINT

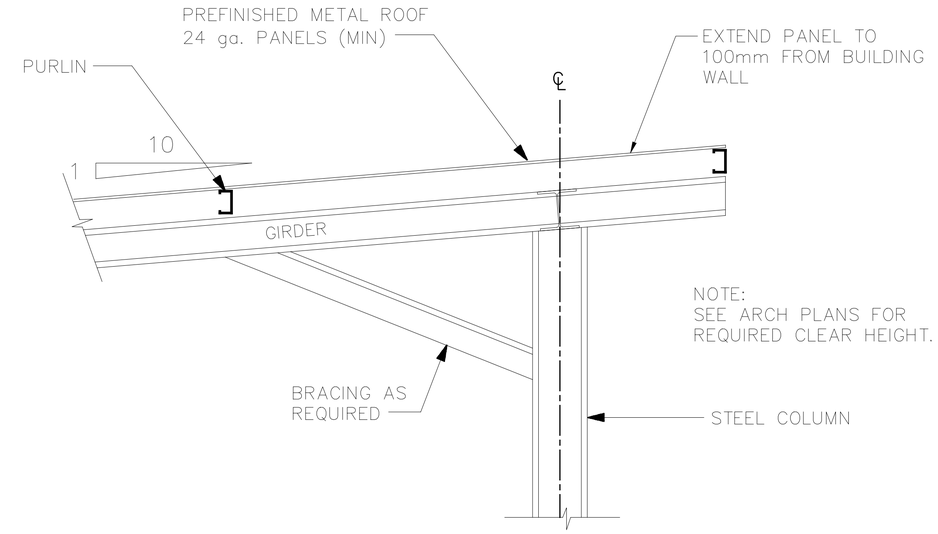

TYPICAL SUNSHADE FRAMING

SCALE= NONE

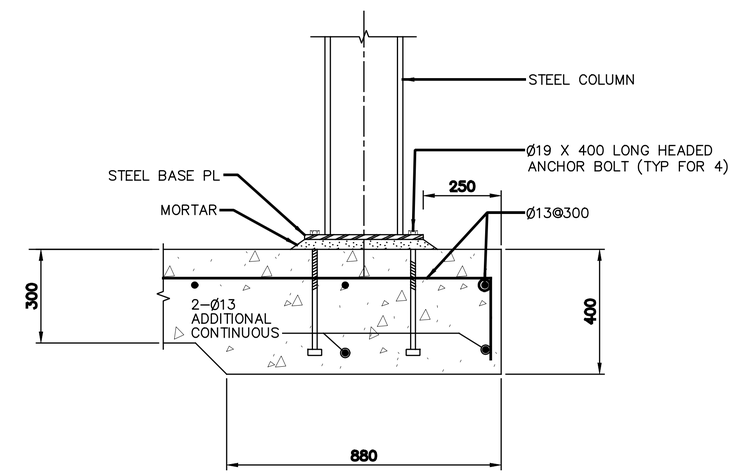

TYPICAL SUNSHADE COLUMN BASE

SCALE= NONE

TYPICAL SUNSHADE NOTES:

1. PER SPECIFICATION 01015, PARAGRAPH 3.6.6, DESIGN CALCULATIONS AND FABRICATION DRAWINGS FOR SUNSHADES SHALL BE SUBMITTED FOR APPROVAL.
2. FRAMING PLAN AND SECTION SHOWN ON THIS DRAWING ARE SCHEMATIC ONLY. ACTUAL MEMBER SIZES AND LAYOUT SHALL BE AS REQUIRED BY DESIGN CALCULATIONS.
3. REFER TO ARCHITECTURAL DRAWINGS FOR ADDITIONAL INFORMATION.

UNLESS OTHERWISE NOTED, LINEAR DIMENSIONS SHOWN ARE IN MILLIMETERS.

SYMBOL	DESCRIPTION	DATE	APR

DESIGNED BY: TCP
DWN BY: TCP
CHK BY: KGO
DATE: 29 OCTOBER 2007
SUBMITTED BY:
FILE NO.: AF06074-SB03DT

US Army Corps of Engineers
Afghanistan Engineer District

AFGHANISTAN NATIONAL POLICE (ANP) DISTRICT HEADQUARTERS COMPOUNDS – 1 STORY HQ
VARIOUS LOCATIONS, AFGHANISTAN
STANDARD DETAILS
DETAILS

SHEET REFERENCE NUMBER:
SS–3

10/24/2007
S:\Engineering & Construction\Engineering\00_RFPs in-progress\ANP\ANP 01-Story Design\ANP3Dist_HQ_1Story_Design_Changes_26Oct07\Microstation files\struct\AF06074-SB03DT.dgn

PIPING AND HVAC LEGEND

SYMBOL	DESCRIPTION
	THREE-WAY VALVE (ANY TYPE OF OPERATOR)
	GATE VALVE
	BALL VALVE
	GLOBE VALVE
	ANGLE GLOBE VALVE
	PRESSURE RELIEF VALVE
	PRESSURE-TEMPERATURE RELIEF VALVE
	BALANCING COCK
	BUTTERFLY VALVE
	CHECK VALVE
	UNION (SCREWED)
	PRESSURE CONTROL VALVE (SELF-CONTAINED)
S	SOLENOID VALVE
M	MOTOR OPERATED CONTROL VALVE
	AIR ELIMINATOR
AAV	AIR VENT, AUTOMATIC
	AIR VENT, MANUAL
	BACK PRESSURE VALVE
	PRESSURE REDUCING VALVE
	"Y" STRAINER
	AIR VALVE
	TEMPERATURE REGULATING VALVE
	EXPANSION VALVE, HAND
	EXPANSION VALVE, THERMOSTATIC
T	THERMOMETER, DIAL TYPE
T	THERMOMETER, VERTICAL TYPE
P	PRESSURE GAGE
	RISER DOWN (ELBOW)
	RISER UP (ELBOW)
	PITCH DOWN IN DIRECTION OF FLOW
	RISE OR DROP
CHS	CHILLED WATER SUPPLY
CHR	CHILLED WATER RETURN
C	CONDENSATE DRAIN

SYMBOL	DESCRIPTION
	BRANCH CONNECTION OUT OF TOP
	BRANCH CONNECTION OUT OF BOTTOM
	BRANCH CONNECTION OUT OF SIDE
	CAP ON END OF PIPE
	CONCENTRIC REDUCER
	ECCENTRIC REDUCER
	ANCHOR POINT
	FLEXIBLE CONNECTION
FS	FLOW SWITCH
	EXPANSION JOINT
	FLUSH VALVE
HB HB	HOSE BIBB
	WATER FIXTURE
	MIXING FAUCET COLD & HOT WATER
DV	DRAIN VALVE
	SIGHT GLASS
FM	FLOW METER
	PET COCK
	FLOW DIRECTION
	INLINE-PUMP
	CALIBRATED BALANCE VALVE
T	AQUASTAT
M	MOTOR OPERATED BUTTERFLY VALVE
	CEILING FAN
	OSCILATING WALL FAN

ABBREVIATIONS

AAV	AIR VENT AUTOMATIC
AC	AIR CONDITIONING UNIT
ACMH	ACTUAL CUBIC METERS PER HOUR
ACC	AIR COOLED CHILLER
ACCU	AIR COOLED CONDENSING UNIT
AF	AIR FILTER
AFF	ABOVE FINISHED FLOOR
AD	AREA DRAIN
AHU	AIR HANDLING UNIT
AP	ACCESS PANEL
BF	BOTTOM FLAT
BD	BALANCING DAMPER
BDD	BACKDRAFT DAMPER
BFP	BACKFLOW PREVENTER
BHP	BRAKE HORSEPOWER
BOD	BOTTOM OF DUCT
°C	DEGREES CELSIUS
CD	CEILING DIFFUSER
CF	CEILING FAN
CHW	CHILLED WATER
CLG	CEILING
CM	CENTIMETER
CMH	CUBIC METER PER HOUR
CONN	CONNECTION
CONT	CONTINUATION
CU	CONDENSING UNIT
CW	CHILLED WATER COOLING COIL
D	DROP/DEPTH
DB	DRY BULB
DET	DETAIL
DIA	DIAMETER
DH	DUCT HEATER
DIFF	DIFFERENTIAL
DG	DOOR GRILLE
DN	DOWN
DWG	DRAWING
DX	DIRECT EXPANSION
EA	EXHAUST AIR
EAT	ENTERING AIR TEMPERATURE
EDB	ENTERING DRY BULB
EDH	ELECTRIC DUCT HEATER
EF	EXHAUST FAN
EG	EXHAUST GRILLE
EH	ELECTRICAL CABINET HEATER
EL	ELEVATION
ELEC	ELECTRICITY/ELECTRICAL
EQUIP	EQUIPMENT
ER	EXHAUST REGISTER
EWB	ENTERING WET BULB
EWH	ELECTRIC WATER HEATER
EWT	ENTERING WATER TEMPERATURE
EXH	EXHAUST
EXT	EXTERNAL/EXTERIOR
FCO	FLOOR CLEAN OUT
FCU	FAN COIL UNIT
FCV	FLOW CONTROL VALVE
FD	FLOOR DRAIN/FIRE DAMPER
FIN	FINISHED
FL	FLOOR
FOS	FUEL OIL SUPPLY
FOR	FUEL OIL RETURN
FS	FLOOR SINK
FSD	COMBINATION FIRE/SMOKE DAMPER
GA	GAUGE
HB	HOSE BIBB
HC	HEATING COIL
HORIZ	HORIZONTAL
HP	HORSEPOWER
HR	HOUR
HVAC	HEATING, VENTILATING & AIR CONDITIONING
HZ	HERTZ
ID	INSIDE DIAMETER
IH	INTAKE HOOD
IS	INERTIAL SEPARATOR
INV.EL.	INVERT ELEVATION
KG	KILOGRAM
KH	KITCHEN HOOD
KW	KILOWATT
KPa	KILO PASCALS

LAT	LEAVING AIR TEMPERATURE
LAV	LAVATORY
LFACP	LOCAL FIRE ALARM CONTROL PANEL
LPM	LITERS PER MINUTE
LPH	LITERS PER HOUR
LS	LEVEL SWITCH
LVG	LEAVING
LVR	LOUVER
M	METER
M^2	SQUARE METER
M^3	CUBIC METER
MAX	MAXIMUM
MECH	MECHANICAL
MIN	MINIMUM
MISC	MISCELLANEOUS
MM	MILLIMETER
MVD	MANUAL VOLUME DAMPER
NC	NORMALLY CLOSED
NFPA	NATIONAL FIRE PROTECTION ASSOCIATION
NO	NORMALLY OPEN/NUMBER
NOM	NOMINAL
NTS	NOT TO SCALE
OA	OUTSIDE AIR
OC	ON CENTER
OD	OVERFLOW DRAIN
OI	OIL INTERCEPTOR
OWF	OSCILATING WALL FAN
ϕ	PHASE
P	PUMP
PD	PRESSURE DIFFERENTIAL
PH	PROPANE SPACE HEATER
PRESS	PRESSURE
PRV	PRESSURE REDUCING VALVE
PS	PRESSURE SWITCH
QTY	QUANTITY
R	RISE
RA	RETURN AIR
RC	REFRIGERATION COOLER
RD	ROOF DRAIN
REQD	REQUIRED
RF	RETURN FAN
RG	RETURN GRILLE
RH	RELATIVE HUMIDITY
RL	REFRIGERANT LIQUID
RM	ROOM
RPM	REVOLUTIONS PER MINUTE
RR	RETURN REGISTER
RS	REFRIGERANT SUCTION
S	SOIL/SOUTH/SECOND
SA	SUPPLY AIR
SD	SUPPLY AIR DIFFUSER
SENS	SENSIBLE
SF	SUPPLY FAN
SG	SUPPLY GRILLE
SH	SHEET
SMACNA	SHEET METAL AND AIR CONDITIONING CONTRACTORS NATIONAL ASSOCIATION
SOV	SHUT-OFF VALVE
SP	STATIC PRESSURE
SQ FT	SQUARE FOOT/SQUARE FEET
SR	SUPPLY REGISTER
SST	SATURATED SUCTION TEMPERATURE
TCP	TEMPERATURE CONTROL PANEL
TCV	TEMPERATURE CONTROL VALVE
TEMP	TEMPERATURE
TG	TRANSFER GRILLE
TK	TANK
TP	TRAP PRIMER
TYP	TYPICAL
UC	UNDERCUT DOOR
UH	UNIT HEATER
UL	UNDERWRITER'S LABORATORIES
V	VOLTS
VEL	VELOCITY
VH	VENT HOOD
WCCU	WATER COOLED CONDENSING UNIT
WG	WATER GAGE

GENERAL NOTES:

1. SEE ARCHITECTURAL DRAWINGS FOR EXACT LOCATION OF LOUVERS, EQUIPMENT PADS AND SUPPORT PLATFORMS.
2. SEE ARCHITECTURAL REFLECTED CEILING PLAN FOR EXACT LOCATION OF DIFFUSERS, REGISTERS, AND GRIILLES.
3. INSULATE DUCTWORK AND REFRIGERANT PIPING SYSTEMS IN ACCORDANCE WITH SPEC. SECTION 01015, THERMAL INSULATION FOR MECHANICAL SYSTEMS.
4. ALL DIMENSIONS SHOWN IN mm UNLESS INDICATED OTHERWISE.
5. ALL DUCT DIMENSIONS SHOWN ON THE DRAWINGS ARE CLEAR INSIDE DIMENSIONS.
6. MOUNT WALL THERMOSTATS 1.5M ABOVE FINISHED FLOOR.
7. OUTDOOR CONDENSING UNITS SHALL BE INSTALLED ON 300 HIGH STEEL PLATFORM ON A CONCRETE PAD AND PROVIDED WITH VIBRATION PADS.

CONTROL LEGEND

SYMBOL	DESCRIPTION
M	MOTORIZED CONTROL DAMPER
	CONTROL CONNECTION
S/S	START/STOP CONTROL
H	HUMIDISTAT, TWO POSITION
Hm	HUMIDISTAT, MODULATING
H	HUMIDITY SENSOR
SD	SMOKE DETECTOR
T_2	THERMOSTAT, TWO POSITION
T	SPACE THERMOSTAT
FS	FLOW SWITCH
TI	TEMPERATURE INDICATOR
T_S	SPACE TEMPERATURE SENSOR

UNLESS OTHERWISE NOTED, LINEAR DIMENSIONS SHOWN ARE IN MILLIMETERS.

SYMBOL	DESCRIPTION	DATE	APR

DESIGNED BY: RMS
DWN BY: RMS
CHK BY: SE
DATE: 29 OCTOBER 2007
SUBMITTED BY:
FILE NO.: AF06073-MH01GN

US Army Corps of Engineers
Afghanistan Engineer District

AFGHANISTAN NATIONAL POLICE (ANP) DISTRICT HEADQUARTERS COMPOUNDS – 1 STORY HQ
VARIOUS LOCATIONS, AFGHANISTAN
STANDARD DETAILS
LEGENDS AND ABBREVIATIONS

SHEET REFERENCE NUMBER:
SM-1

10/23/2007
S:\Engineering & Construction\Engineering\00_RFPs in-progress\ANP\ANP ONE-Story Design\ANP Dist HQ 1Story Design Changes 26OCT07\Microstation Files\mech\AF06073MH01GN.dgn

ELECTRIC CABINET/UNIT HEATER SCHEDULE

EH X–X | UH X–X

EQUIPT. NO.	LOCATION (1)	DISCHARGE	CAPACITY (KW)	AIR FLOW (CMH)	ELECTRICAL DATA HP	VOLTS	PH	HZ	TEMP. RISE DEG C	SOUND POWER dBA	REMARKS
EH–A–1	CHIEF'S TOILET	HORIZONTAL	1.5	136	50 W	220	1	50	30		WALL MOUNTED CABINET HEATER
EH–A–2	TOILETS (2)	HORIZONTAL	1	68	40 W	220	1	50	40		WALL MOUNTED CABINET HEATER
UH–A–1	TOILETS/ SHOWERS	HORIZONTAL	3.0	510	1/20	220	1	50	17		WALL MOUNTED UNIT HEATER SEE DETAIL C ON SHT. SM3.
UH–C–1	GUARD SHACK	HORIZONTAL	4	425	1/30	220	1	50	10		FLOOR MOUNTED CABINET HEATER
UH–E–1	WELL HOUSE	HORIZONTAL	3.0	510	1/20	220	1	50	17		WALL MOUNTED UNIT HEATER SEE DETAIL C ON SHT. SM3.

(1) SEE PLANS FOR LOCATION AND QUANTITY.

EXHAUST FAN SCHEDULE

EF A–X

EQUIPT. NO.	LOCATION	AIR QUANTITY CMH	S.P. MM–W.G.	FAN TYPE	ELECTRICAL DATA HP	VOLTS	PH	HZ	CONTROL DIAGRAM	SOUND POWER dWA	REMARKS
EF–A–1	CHIEF'S TOILET	170	7	CEILING CABINET	80 WATTS	220	1	50	E1	50	CEILING MOUNTED WITH GRAVITY BACKDRAFT DAMPER AND CEILING GRILL
EF–A–2	TOILETS (3)	85	7	CEILING CABINET	80 WATTS	220	1	50	E1	50	CEILING MOUNTED WITH GRAVITY BACKDRAFT DAMPER AND CEILING GRILL
EF–A–3	PRISONER CELLS	510	7	WALL CENTRIFUGAL	1/12	220	1	50	E2	50	WALL MOUNTED WITH BACKDRAFT DAMPER
EF–A–4	MEN'S TOILET	510	7	WALL CENTRIFUGAL	1/12	220	1	50	E2	50	WALL MOUNTED WITH BACKDRAFT DAMPER
EF–A–5	KITCHEN	3,300	14	ROOF CENTRIFUGAL UPBLAST	3/4	220	1	50	E2	65	RATED FOR 175° C AND KITCHEN HOOD
EF–A–6	KITCHEN	1,700	8	WALL CENTRIFUGAL	1/4	220	1	50	E4	60	WALL MOUNTED WITH BACKDRAFT DAMPER
EF–E–1	WELL HOUSE	600	10	WALL CENTRIFUGAL	1/4	220	1	50	E4	65	WALL MOUNTED WITH BACKDRAFT DAMPER
SF–A–1	KITCHEN	3,300	8	INLINE CENTRIFUGAL	1/2	220	1	50	E2	60	CEILING MOUNTED W/GRAVITY BACKDRAFT DAMPER

CEILING AND OSCILLATING WALL FAN SCHEDULE

CF A–1 | OWF A–1

EQUIPT. NO.	AIR QUALITY CMH	FAN TYPE	ELECTRICAL DATA HP	VOLTS	PH	HZ	REMARKS
CF–A–1	13,600	CEILING FAN	85 WATTS	220	1	50	CEILING MOUNTED
OWF-A-1	5,000	OSCILLATING WALL FAN	1/4	220	1	50	WALL MOUNTED

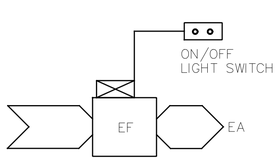

TEMPERATURE CONTROL DIAGRAM E1

E1 SEQUENCE OF CONTROL

START–UP

THE EXHAUST FAN SHALL BE STARTED MANUALLY FROM A LOCAL START/STOP LIGHT SWITCH.

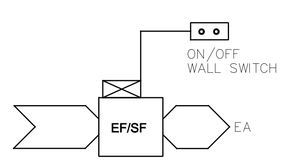

TEMPERATURE CONTROL DIAGRAM E2

E2 SEQUENCE OF CONTROL

START–UP

THE EXHAUST/SUPPLY FAN SHALL BE STARTED MANUALLY FROM A LOCAL START/STOP LIGHT SWITCH.

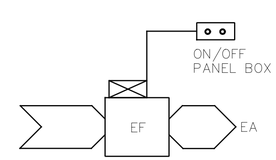

TEMPERATURE CONTROL DIAGRAM E3

E3 SEQUENCE OF CONTROL

START–UP

THE EXHAUST FAN SHALL BE STARTED MANUALLY FROM AN THE ON–OFF SWITCH IN THE PANEL BOX.

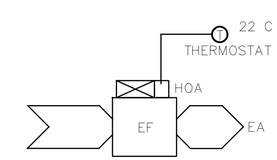

TEMPERATURE CONTROL DIAGRAM E4

E4 SEQUENCE OF CONTROL

START–UP

THE EXHAUST FAN SHALL BE STARTED MANUALLY BY PLACING THE HAND–OFF–AUTO (HOA) SWITCH IN THE HAND POSITION. IN THE AUTO POSITION, FAN OPERATION SHALL BE CONTROLLED OFF AN ADJUSTABLE THERMOSTAT.

SYMBOL	DESCRIPTION	DATE	APR

DESIGNED BY: RMS | DATE: 29 OCTOBER 2007
DWN BY: JRP | SUBMITTED BY:
CHK BY: JLK | FILE NO.: AF06073–MH02SC

US Army Corps of Engineers
Afghanistan Engineer District

AFGHANISTAN NATIONAL POLICE (ANP) DISTRICT HEADQUARTERS COMPOUNDS – 1 STORY HQ
VARIOUS LOCATIONS, AFGHANISTAN
STANDARD DETAILS
MECHANICAL SCHEDULES

SHEET REFERENCE NUMBER:
SM–2

10/23/2007
S:\Engineering & Construction\Engineering\00_RFPs in-progress\ANP\ANP 01-Story Design\ANP Dist HQ 1Story Design Changes 26Oct07\Microstation files\mech\AF06073-MH02SC.dgn

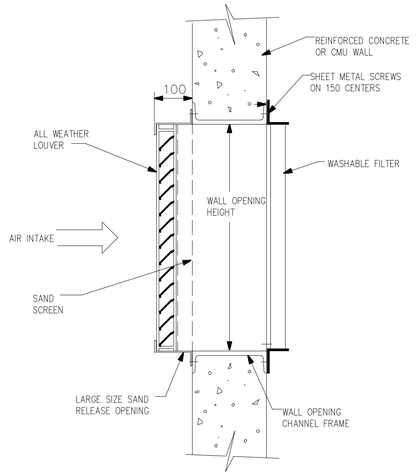

SAND TRAP TYPE LOUVER (A / SM3)
NOT TO SCALE

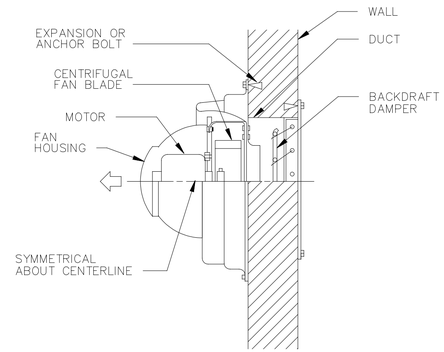

POWER WALL VENTILATOR DETAIL (B / SM3)
NOT TO SCALE

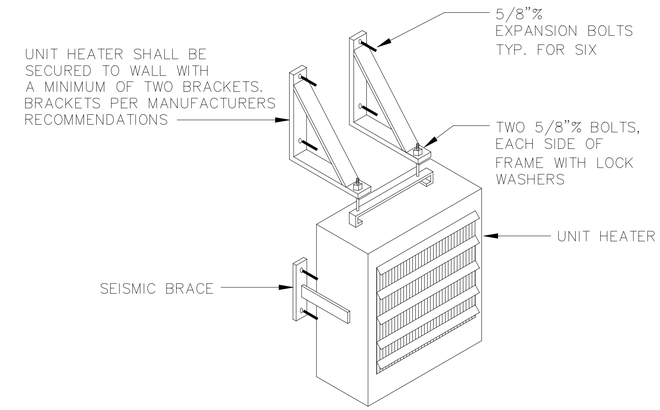

ELECTRIC UNIT HEATER DETAIL (C / SM3)
NOT TO SCALE

NOT USED (D / SM3)

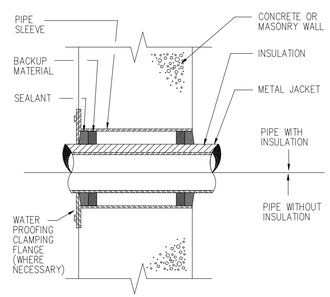

PIPE SLEEVE THRU WALL (E / SM3)
NOT TO SCALE

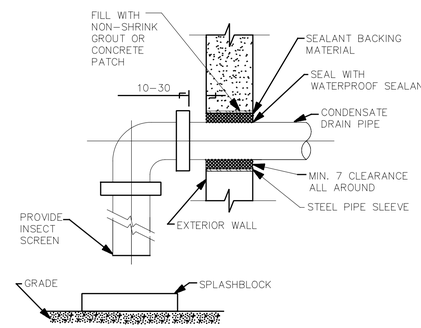

CONDENSATE DRAIN THRU EXTERIOR WALL (F / SM3)
NOT TO SCALE

NOT USED (G / SM3)
NOT TO SCALE

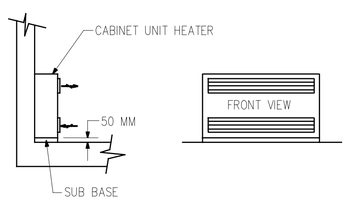

CABINET UNIT HEATER (H / SM3)
NOT TO SCALE

UNLESS OTHERWISE NOTED, LINEAR DIMENSIONS SHOWN ARE IN MILLIMETERS.

SYMBOL	DESCRIPTION	DATE	APR

DESIGNED BY: RMS
DWN BY: RMS
CHK BY: SE
DATE: 29 OCTOBER 2007
SUBMITTED BY:
FILE NO.: AF06074-MH03DT

US Army Corps of Engineers
Afghanistan Engineer District

AFGHANISTAN NATIONAL POLICE (ANP) DISTRICT HEADQUARTERS COMPOUNDS – 1 STORY HQ
VARIOUS LOCATIONS, AFGHANISTAN
STANDARD DETAILS
MECHANICAL STANDARD DETAILS

SHEET REFERENCE NUMBER:
SM–3

10/24/2007
S:\Engineering & Construction\Engineering\00_RFPs in-press\ANP\ANP ON-Story Design\ANP Dist HQ 1Story Design Changes 26Oct07\Microstation files\mech\AF06074MH03DT.dgn

LEGEND

- GATE VALVE
- GLOBE VALVE
- BUTTERFLY VALVE
- CHECK VALVE
- STOP CHECK VALVE
- PLUG VALVE
- 3-WAY VALVE
- RELIEF OR SAFETY VALVE
- ANGLE VALVE
- ANGLE GLOBE VALVE
- BALANCING COCK
- AIR VALVE
- HOSE GATE DRAIN VALVE
- EXPANSION VALVE
- AAV — AIR VENT, AUTOMATIC
- AIR VENT, MANUAL
- M — MOTORIZED VALVE (MODULATING OR TWO POSITION)
- S — SOLENOID VALVE
- M — 3-WAY MOTORIZED VALVE (MOD. OR 3-POSITION)
- S — 3-WAY SOLENOID VALVE
- TEMPERATURE REGULATING VALVE
- AIR ELIMINATOR
- BACK PRESSURE VALVE
- PRESSURE REDUCING VALVE
- D.V. — DRAIN VALVE
- SLEEVE COUPLING (SC)
- BP — BACKFLOW PREVENTER
- WHA 'A' — WATER HAMMER ARRESTOR

LEGEND

- P — PRESSURE GAUGE
- T — THERMOMETER, DIAL TYPE
- T — THERMOMETER, VERTICAL TYPE
- H.B. — HOSE BIBB, PLAN
- H.B. — HOSE BIBB, ELEV.
- W.H. — WALL HYDRANT
- CO — EXPOSED CLEANOUT
- FCO — FLOOR CLEANOUT
- WCO — WALL CLEANOUT
- BALL VALVE
- UNION
- FLANGE SET
- FLEXIBLE HOSE/CONNECTION
- Y-TYPE STRAINER
- SIGHT GLASS
- GAUGE GLASS W/COCKS
- FILTER / DRYER
- TANK AIR CONTROL FITTING
- CAPPED / PLUGGED CONNECTION
- REDUCER - INCREASER
- EXPANSION LOOP
- EXPANSION JOINT
- SUPPORT LOCATION
- PIPE TURNING DOWN
- PIPE TURNING UP
- FD — FLOOR DRAIN
- ROOF DRAIN
- POINT OF CONNECTION TO EXISTING SYSTEM

LEGEND

- A — COMPRESSED AIR DROP
- HU — HUMIDIFIER
- I.F. — INSULATING FLANGE
- THERMAL RELIEF VALVE W/ SIGHT FLOW INDICATOR
- S — BASKET STRAINER
- W — WATER METER
- TS — FLOW CONTROL VALVE
- SAMPLE CONNECTION
- FIRE SAFETY VALVE
- R — NON - SURGE CHECK VALVE
- FLOW CONTROL VALVE
- P — PRESSURE REGULATING VALVE
- W — WATER SLUG VALVE (WSV)

ABBREVIATIONS

A A	AMERICAN DISABILITIES ACT
CO	EXPOSED CLEAN OUT
CW	COLD WATER
EWH	ELECTRIC WATER HEATER
FCO	FLOOR CLEAN OUT
FD	FLOOR DRAIN
FFE	FINISHED FLOOR ELEVATION
FS	FLOOR SINK
GWH	GAS WATER HEATER
HB	HOSE BIBB
HW	HOT WATER
HWR	HOT WATER CIRCULATION
N.C.	NORMALLY CLOSED
P	PUMP
S.R.	SHORT RADIUS
S.S.	STAINLESS STEEL
V	VENT
VTR	VENT THROUGH ROOF
W	WASTE
WCO	WALL CLEAN OUT
WH	WALL HYDRANT

- SOIL OR WASTE PIPE ABOVE FLOOR
- SOIL OR WASTE PIPE BELOW FLOOR (MIN. 50 SIZE)
- COLD WATER, DOMESTIC (PLAN)
- HOT WATER, DOMESTIC (PLAN)
- HOT WATER, CIRCULATION, DOMESTIC (PLAN)
- VENT PIPE
- C — CONDENSATE DRAIN
- CA — COMPRESSED AIR
- HPIW — HIGH PRESSURE INDUSTRIAL WATER
- IW — INDUSTRIAL WATER

EQUIPMENT DESIGNATION

EF — EQUIPMENT TYPE
A-1 — EQUIPMENT NUMBER
BUILDING NUMBER

DETAIL REFERENCE

X — REFERENCE DESIGNATION LETTER
X — DETAIL SHEET LOCATION

PLUMBING FIXTURE SCHEDULE

FIX. NO.	SYMBOL	FIXTURE NAME	C.W.	H.W.	WASTE (W)	VENT (V)	REMARKS
P1		EASTERN WATER CLOSET (FLUSH TANK)	15	--	100	50	CW CONNECTION SHALL BE 25 UNLESS NOTED OTHERWISE. FLOOR OUTLET
P2		ABOLUTION (2 STATION)	15	--	50	32	(2) COMPLETE WALL MOUNTED LAVATORY VALVE ASSEMBLIES AND TRIM MOUNTED 600mm A.F.F.
P3		LAVATORY	15	15	32	32	
P3A		LAVATORY (2 STATION GANG)	15	15	32	32	
P4		MOP SINK (FLOOR MOUNT JANITOR TYPE)	15	15	50	40	DRAIN ON FLOOR OR AS INDICATED
P5		SHOWER	15	15	40	32	
P6		NOT USED					
P7		NOT USED					
P8		NOT USED					
P9		KITCHEN SINK	15	15	40	32	
P10		GREASE INTERCEPTOR			80	50	MANUAL CLEANING TYPE, WITH 135 LPM FLOW RATE

WATER HAMMER ARRESTOR SIZING CHART

P.D.I. SYMBOL	FIXTURE UNIT RATING	NIPPLE SIZE (MM)	CHAMBER HEIGHT (MM)
A	1-11	20	100
B	12-32	25	125
C	33-60	25	150
D	61-113	25	175
E	114-154	25	200
F	155-330	25	225

P. D. I. = PLUMBING AND DRAINAGE INSTITUTE.

GENERAL NOTES:

1. DRAINAGE PIPING LOCATED BELOW FLOORS SHALL BE ROUTED BELOW FOOTINGS UNLESS INDICATED OTHERWISE.
2. INTERIOR SOIL AND WASTE PIPING 80mm AND SMALLER SHALL BE ROUTED WITH A 2% SLOPE. INTERIOR SOIL AND WASTE PIPING 100mm AND LARGER SHALL BE ROUTED WITH A MINIMUM 1% SLOPE.
3. ALL DIMENSIONS SHOWN HERE AND ON PLANS ARE IN MM UNLESS INDICATED OTHERWISE.
4. MINIMUM BURIED PIPE SIZE SHALL BE 50 mm.
5. SEE STANDARD SHEET SM-1 FOR ADDITIONAL ABBREVIATIONS.
6. FOR FOOD SERVICE EQUIPMENT DESCRIPTION, SEE ARCHITECTURAL DRAWINGS.

SYMBOL	DESCRIPTION	DATE	APR

DESIGNED BY: RMS
DATE: 29 OCTOBER 2007
DWN BY: JLK
SUBMITTED BY:
CHK BY: JLK
FILE NO.: AF0607$--MP01GN

US Army Corps of Engineers
Afghanistan Engineer District

AFGHANISTAN NATIONAL POLICE (ANP) DISTRICT HEADQUARTERS COMPOUNDS – 1 STORY HQ
VARIOUS LOCATIONS, AFGHANISTAN
STANDARD DETAILS
LEGEND AND ABBREVIATIONS

SHEET REFERENCE NUMBER:
SP–1

10/24/2007
S:\Engineering & Construction\Engineering\00_RFPs in-progress\ANP\ANP ONE-Story Design\ANP Dist HQ 1Story Design Changes 26Oct07\Microstation Files\mech\AF0607$MP01GN.dgn

NOTES:
1. PIPING SHALL BE PLASTIC PVC TO MATCH WATER DISTRIBUTION SYSTEM.
2. CONTRACTOR SHALL INSTALL DIELECTRIC UNION BETWEEN CONNECTIONS OF DISSIMILAR METALS.

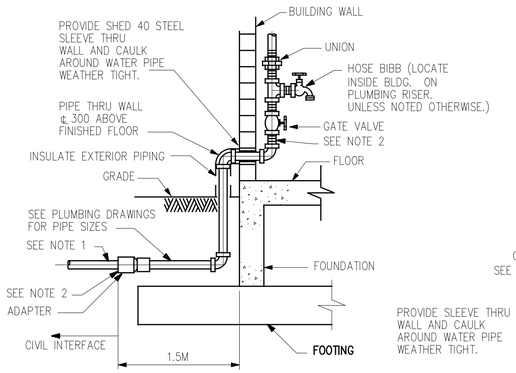

WATER SERVICE ENTRANCE SIDE VIEW

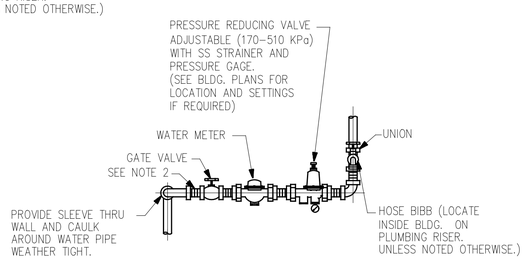

WATER SERVICE ENTRANCE FRONT VIEW

WATER SERVICE ENTRANCE DETAILS (A / SP2)
NOT TO SCALE

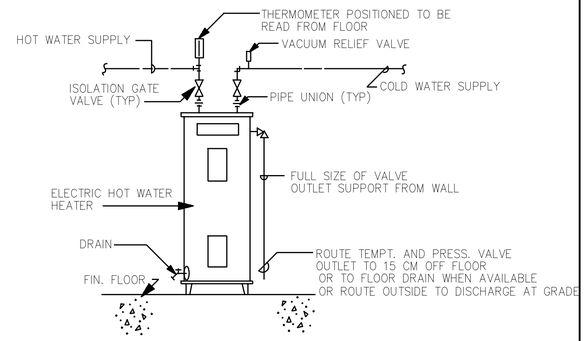

ELECTRIC WATER HEATER DETAIL (B / SP2)
NOT TO SCALE

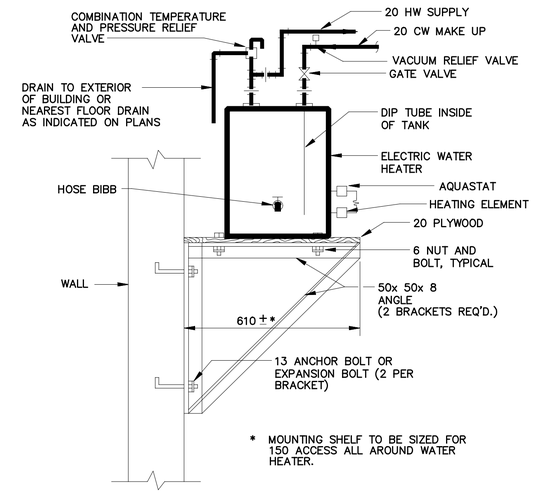

IF WATER HEATER COMES EQUIPPED WITH A MOUNTING BRACKET, CONTRACTOR WILL SUBMIT TO THE ENGINEER FOR APPROVAL, ALTERNATE INSTALLATION DETAIL AS RECOMMENDED BY HEATER MANUFACTURER FOR THE TYPE OF WALL (CMU,METAL STUD, ETC.) APPLICABLE

WALL MOUNTED ELECTRIC WATER HEATER DETAIL (C / SP2)
NOT TO SCALE

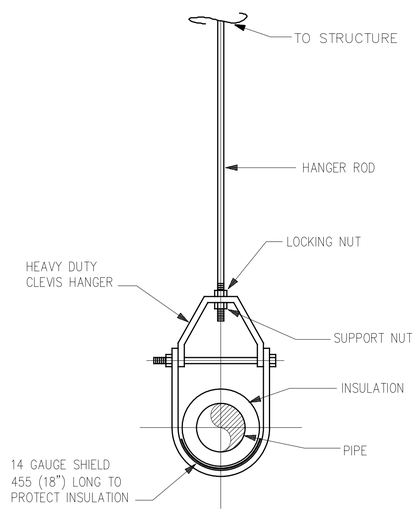

CLEVIS HANGER DETAIL (D / SP2)
NOT TO SCALE

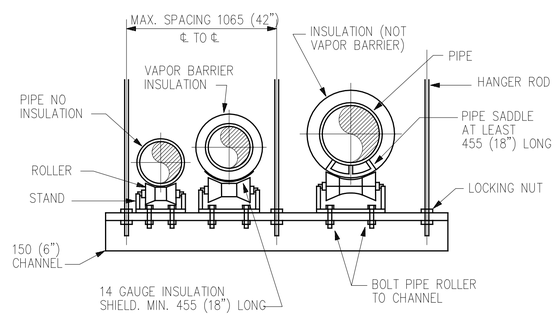

TRAPEZE HANGER DETAIL (E / SP2)
NOT TO SCALE

NOT USED (F / SP2)
NOT TO SCALE

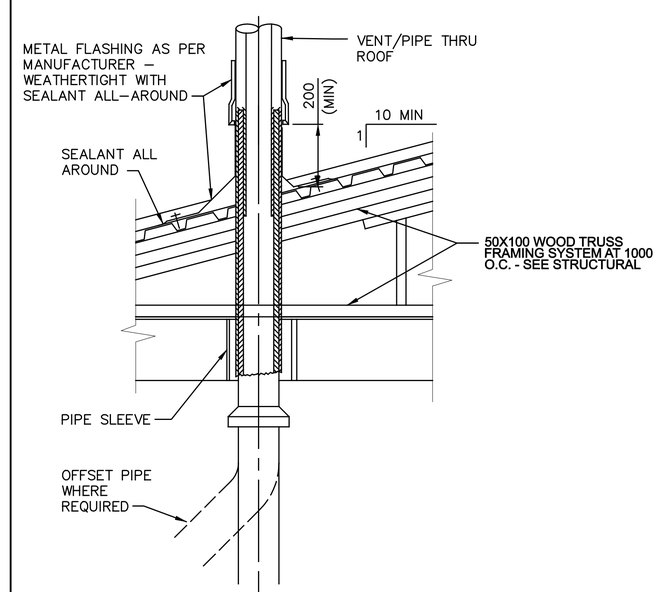

VENT THRU ROOF DETAIL (G / SP2)
NOT TO SCALE

UNLESS OTHERWISE NOTED, LINEAR DIMENSIONS SHOWN ARE IN MILLIMETERS.

SYMBOL	DESCRIPTION	DATE	APR

DESIGNED BY: RMS
DWN BY: RMS
CHK BY: SE
DATE: 29 OCTOBER 2007
SUBMITTED BY:
FILE NO.: AF06074-MP02DT

US Army Corps of Engineers
Afghanistan Engineer District

AFGHANISTAN NATIONAL POLICE (ANP) DISTRICT HEADQUARTERS COMPOUNDS – 1 STORY HQ
VARIOUS LOCATIONS, AFGHANISTAN
STANDARD DETAILS
STANDARD PLUMBING DETAILS

SHEET REFERENCE NUMBER:
SP–2

10/24/2007
S:\Engineering & Construction\Engineering\00 RFPs in-process\ANP\ANP ON 1-Story Design\AN Dist HQ 1Story Design Changes 26Oct07\Microstation files\mech\AF06074MP02DT.dgn

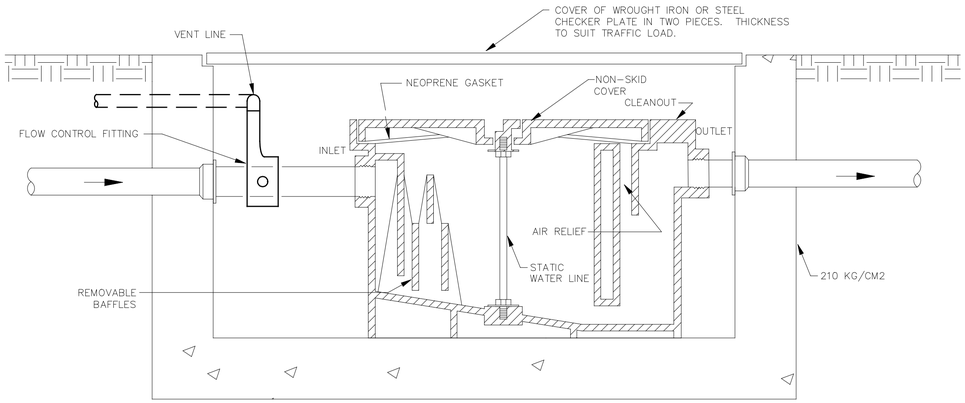

FLOW – 135 LPM
GREASE CAPACITY – 22 KG

GREASE INTERCEPTOR DETAIL (A / SP3)
NOT TO SCALE

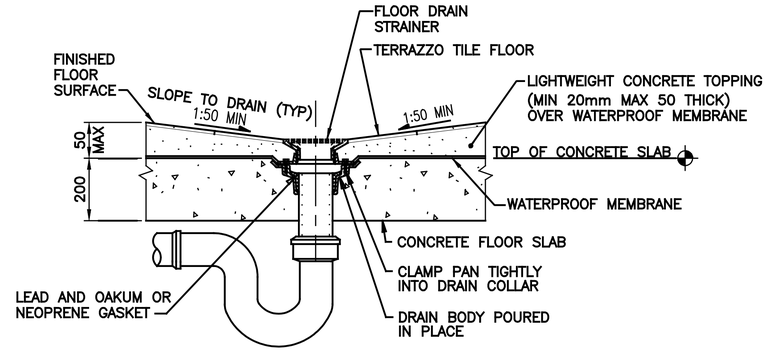

TYPICAL FLOOR DRAIN DETAIL (B / SP3)
NOT TO SCALE

UNLESS OTHERWISE NOTED, LINEAR DIMENSIONS SHOWN ARE IN MILLIMETERS.

SYMBOL	DESCRIPTION	DATE	APR

DESIGNED BY: RMS
DATE: 29 OCTOBER 2007
DWN BY: RMS
SUBMITTED BY:
CHK BY: SE
FILE NO.: AF06073-MP03DT

US Army Corps of Engineers
Afghanistan Engineer District

AFGHANISTAN NATIONAL POLICE (ANP) DISTRICT HEADQUARTERS COMPOUNDS – 1 STORY HQ
VARIOUS LOCATIONS, AFGHANISTAN
STANDARD DETAILS
STANDARD PLUMBING DETAILS

SHEET REFERENCE NUMBER:
SP–3

10/24/2007
S:\Engineering & Construction\Engineering\00_RFPs in-process\ANP\ANP_ON_1-Story Design\AND Dist HQ 1Story Design Changes 26Oct07\Microstation Files\mech\AF06073MP03DT.dgn

LEGEND

- FLUORESCENT LIGHT FIXTURE,
- LIGHT FIXTURES, FIXTURE MARK AS INDICATED
- EXIT SIGN, TYPE F FIXTURE, MTD 2.2M AFF
- EMERGENCY LIGHT, TYPE C FIXTURE, MTD 2.4M AFF
- WP,S — DUPLEX SOCKET OUTLET (13A, 250V), BS 1363
  S – A/C OR WATER HEATER SWITCH–RECEPTACLE COMBINATION
  WP – WEATHERPROOF
- J — JUNCTION BOX
- S3,WP — SWITCH, WP–WEATHERPROOF, 3–3 WAY, EP–EXPLOSION PROOF
- S — LIGHT SWITCH
- SF — EXHAUST FAN SWITCH
- SCF — CEILING FAN SWITCH
- 20 — SAFETY DISCONNECT SWITCH, SWITCH SHALL BE 1P56 ENCLOSURE, 20A UNO
- 1/3 — MOTOR (1/3 HP)
- SM — MANUAL MOTOR STARTER
- ELECTRIC CABINET/ UNIT HEATER
- EWH — ELECTRIC WATER HEATER
- LP–2 — HOMERUN, PNL LP, CIRCUIT 2
- LP–2 — HOMERUN, PNL LP, 3PH CKT, CIRCUIT 2
- COMBINATION LIGHTING AND POWER PANEL (LP), OR LOAD CENTER (LC)
- 400AT / 600AF — 3 POLE, 600A ADJUSTABLE TRIP CIRCUIT BREAKER
- 150AT / 3P — 3 POLE, 150A CIRCUIT BREAKER
- COMBINATION TELEPHONE/DATA OUTLET. SEE DETAIL SHEET SE–5 MOUNTED 0.5M AFF
- W — SINGLE TELEPHONE ONLY OUTLET, WALL MOUNTED 1.2m AFF
- TBB — TELEPHONE BACK BOARD (TVBB INDICATES TELEVISION BACKBOARD) (1200mmx600mmx12mm)UNLESS NOTED OTHERWISE
- EXOTHERMIC WELDED GROUND CONNECTION
- GROUND ROD (EARTH ELECTRODE) WITH EXOTHERMIC WELD CONNECTION, COPPER, 20mm DIA X 3.0m LENGTH
- EM 1 — ELECTRIC POWER MANHOLE, H INDICATES HANDHOLE.
- CM 1 — COMMUNICATIONS MANHOLE, H INDICATES HANDHOLE.
- SE — UNDERGROUND SECONDARY DISTRIBUTION POWER LINE, DIRECT BURIED IN SCHEDULE 40 PVC C, UNO
- UNDERGROUND DIRECT BURIED SCH 40 PVC C, AS INDICATED, 600 BFG, UNO

GENERAL NOTES:

1. REFER TO SECTION 01015 FOR ADDITIONAL / DETAIL REQUIREMENTS.
2. ALL WIRING INSTALLATION FOR LIGHTING, POWER, AND TELECOMMUNICATIONS, SHALL BE IN APPROVED METAL CONDUIT, EITHER CONCEALED OR SURFACE MTD.
3. EXIT AND EMERGENCY LIGHTING FIXTURES SHALL BE CONNECTED TO AN UN SWITCHED POWER CIRCUIT.
4. MOUNTING HEIGHT FOR ALL PENDANT MTD LIGHT FIXTURE IS 3M AFF UNO ON THE DRAWINGS OR IN THE LIGHT FIXTURE SCH.
5. MOUNT ALL LIGHT AND FAN SWITCHES 1.2M AFF UNO.
6. MOUNT ALL RECEPTACLES 500 AFF UNO. MOUNT ALL COUNTER TOP RECEPTACLES 100 ABOVE COUNTER TOP, AND PROVIDE GFI PROTECTION.
7. ALL SPARE OR EMPTY CONDUITS SHALL HAVE A PULL STRING SECURED AT BOTH ENDS OF CONDUIT.
8. ALL ELECTRICAL SYSTEMS SHALL BE INSTALLED IN ACCORDANCE WITH THE MANUFACTURERS RECOMMENDATIONS AND THE NEC.
9. BOND LIGHTING PROTECTION GROUND SYSTEMS TO BUILDING ELECTRICAL GROUND SYSTEM PER NEC 250.16

LIGHTING FIXTURE SCHEDULE

* SEE LIGHTING FIXTURE DETAILS ON DRAWINGS SE–2 & SE–3

FIXTURE MARK	LINE VOLT.	TYPE	LAMPS NO.	LAMPS WATTAGE	MOUNTING	REMARKS
A	240	230B1	3	40	SURFACE/PENDANT	INDUSTRIAL FLUORESCENT, WITH ELECTRONIC BALLAST
A1	240	230A1	2	40	SURFACE/PENDANT	INDUSTRIAL FLUORESCENT, WITH ELECTRONIC BALLAST
B	240	232	2	40	SURFACE/PENDANT	VAPORTIGHT FLUORESCENT
E	240	–	1	1000	ROOF	SPOT LIGHT
H	240	SF–11	1	100	SURFACE	VAPOR PROOF PROTECTED INCANDESCENT WITH CLEAR, RED, BLUE,AND BLACK GLOBE LAMPS ON THE DRAWINGS

ABBREVIATIONS

AFG	ABOVE FINISHED GRADE
AFF	ABOVE FINISHED FLOOR
AF	AMP FRAME
AT	AMP TRIP
ACCU	AIR COOLED CONDENSING UNIT
A	AMPERE
AHU	AIR HANDLING UNIT
AIC	AMPERE INTERRUPTING CAPACITY
BFG	BELOW FINISHED GRADE
CH	COMMUNICATIONS HANDHOLE
CKT	CIRCUIT
CM	COMMUNICATIONS MANHOLE
CND	CONDUCTOR(S)
C	CONDUIT
COR	CONTRACTING OFFICERS REPRESENTATIVE
EF	EXHAUST FAN
EH	ELECTRIC POWER HANDHOLE
EM	ELECTRIC POWER MANHOLE
EP	EXPLOSION PROOF
ELCB	EARTH LEAKAGE CIRCUIT BREAKER
FACP	FIRE ALARM CONTROL PANEL
GFI	GROUND FAULT INTERRUPTING
GFCI	GOVERNMENT FURNISHED CONTRACTOR INSTALLED
HP	HORSEPOWER
HPS	HIGH PRESSURE SODIUM
HZ	HERTZ
KV	KILOVOLT
KW	KILOWATT
KVA	KILOVOLT–AMPERE
M	METERS
MBB	METERING BACK BOARD
MDF	MAIN DISTRIBUTION FRAME
MEW	HOST NATION MINISTRY OF ELECTRICITY AND WATER
MTD	MOUNTED
NEC	NATIONAL ELECTRICAL CODE
NFPA	NATIONAL FIRE PROTECTION ASSOCIATION
NIC	NOT IN CONTRACT
PH, Ø	PHASE
P	POLE
XXX	HOST NATION ARMED FORCES
TEL	TEL CO.
RM	ROOM
SCH	SCHEDULE
SN	SOLID NEUTRAL
TBB	TELEPHONE TERMINAL BACKBOARD
TCB	TELEPHONE CONNECTION BOX (BY TEL CO)
TYP.	TYPICAL
UNO	UNLESS NOTED OTHERWISE
V	VOLT
W	WIRE
WP	WEATHERPROOF
XFMR,T	TRANSFORMER

EQUIVALENT CONDUIT SIZE

mm	INCHES
20	3/4
25	1
32	1 1/4
38	1 1/2
50	2
60	2 1/2
80	3
90	3 1/2
100	4

METRIC COPPER CONDUCTOR CONVERSION CHART

AWG KCMIL	COMPUTED CONVERSION mm 2	ADVISED CROSS SECTION mm 2
16	1.31	1.5
14	2.08	2.5
12	3.31	4
10	5.27	6
8	8.4	10
6	13.3	16
4	21.2	25
3	26.7	25
2	33.6	35
1	42.4	50
1/0	53.4	50
2/0	67.5	70
3/0	85.0	95
4/0	107.2	120
250	126.7	120
300	152.0	150
350	177.4	185
400	202.7	240
500	253.4	300

UNLESS OTHERWISE NOTED, LINEAR DIMENSIONS SHOWN ARE IN MILLIMETERS.

SYMBOL	DESCRIPTION	DATE	APR

DESIGNED BY: MM | DATE: 29 OCTOBER 2007
DWN BY: MM | SUBMITTED BY:
CHK BY: SE | FILE NO.: AF06073-EL01GN

US Army Corps of Engineers
Afghanistan Engineer District

AFGHANISTAN NATIONAL POLICE (ANP) DISTRICT HEADQUARTERS COMPOUNDS – 1 STORY HQ
VARIOUS LOCATIONS, AFGHANISTAN
STANDARD DETAILS
LEGEND & ABBREVATIONS

SHEET REFERENCE NUMBER:
SE–1

10/24/2007
S:\Engineering & Construction\Engineering\00 RFPs in-progress\ANP\ANP ON-Story Design\ANP Dist HQ 1Story Design Changes 26Oct07\Microstation Files\elec\AF06073-EL01GN.dgn

FIXTURE MARK A

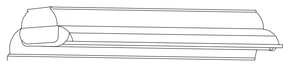

TYPE 230
SUSPENSION MOUNTED, INDUSTRIAL,
OPEN TYPE FLUORESCENT FIXTURE, 4-FOOT

FIRST SUFFIX	SECOND-SUFFIX	DESCRIPTION
A		TWO LAMPS
B		THREE LAMPS
C		FOUR LAMPS
	1	8 TO 15 PERCENT UPLIGHT
	2	18 TO 25 PERCENT UPLIGHT

FIXTURE SHALL CONFORM TO UL1570. STANDARD BALLAST(S) SHALL BE THE CLASS P, HIGH POWER FACTOR TYPE APPROVED FOR THE APPLICATION BY THE CERTIFIED BALLAST MANUFACTURERS. CHANNEL HOUSING, END FITTINGS, AND REFLECTOR SHALL BE CONSTRUCTED WITH DIE-FORMED, COLD-ROLLED STEEL. REFLECTOR FINISH SHALL BE PORCELIAN ENAMEL, BAKED WHITE ENAMEL OR ALUMINUM OXIDE. SOCKETS SHALL BE OF THE TYPE REQUIRING A FORCED MOVEMENT ALONG THE LONGITUDINAL AXIS OF THE LAMP FOR INSERTION AND REMOVAL OF THE LAMP. FIXTURE SHALL BE PREWIRED. FLUORESCENT TUBES SHALL BE PROTECTED BY A VIRGIN ACRYLIC PROTECTIVE SLEEVE AND CLEAR PLASTIC VENTED END CAPS.

FIXTURE MARK B

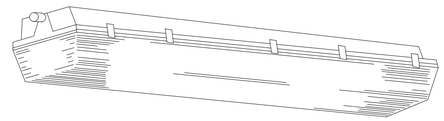

TYPE 232
4-FOOT FIXTURE LENGTH

ENCLOSED AND GASKETED, VAPOR-TIGHT FLUORESCENT FIXTURE
FOR SURFACE OR PENDANT MOUNTING

FIXTURE SHALL CONFORM TO UL1570 AND SHALL BE VAPOR-TIGHT AND SUITABLE FOR USE IN WET LOCATIONS. FIXTURE SHALL HAVE ONE-PIECE HOUSINGOF MOLDED HIGH-IMPACT PLASTIC OR REINFORCED FIBERGLASS. HOUSING BODY SHALL HAVE AN INTERNAL, DIE-FORMED, COLD-ROLLED STEEL CHANNEL WITH COVER TO PROVIDE FIXTURE RIGIDITY AND TO CONTAIN ELECTRIC COMPONENTS. THE METAL CHANNEL AND COVER SHALL RECEIVE A RUST INHIBITIVE COATING BEFORE APPLICATION OF THE FINISH COAT, WHICH SHALL CONSIST OF BAKED WHITE ENAMEL OR PORCELAIN ENAMEL. THE LENS SHALL BE ONE PIECE, OF HIGH-IMPACT-RESISTANT ACRYLIC, AND SHALL HAVE SMOOTH EXTERIOR SURFACE AND STIPPLED OR PEBBLED INTERIOR SURFACE. THE LENS SHALL BE SECURED TO THE HOUSING WITH CAPTIVE MOLDED PLASTIC OR STAINLESS STEEL SPRING LATCHES. A CONTINUOUS GASKET SHALL BE PROVIDED TO FORM A VAPOR SEAL BETWEEN THE LENS AND THE FIXTURE BODY. ALL OPENINGS IN THE HOUSING FOR MOUNTING, CONDUIT, ETC., SHALL BE CAPABLE OF FORMING A VAPOR-TIGHT SEAL. BALLAST(S) SHALL BE COLD WEATHER TYPE FOR STARTING TEMPERATURES DOWN TO MINUS 20 DEGREES F. STANDARD BALLAST(S) SHALL BE THE CLASS P, HIGH POWER FACTOR TYPE APPROVED FOR THE APPLICATION BY THE CERTIFIED BALLAST MANUFACTURERS. FIXTURE SHALL BE PREWIRED, AND PROVIDED WITH LAMPS THAT ARE PROPERLY MATED TO THE BALLAST OPERATING CHARACTERISTICS.

FIXTURE MARK E

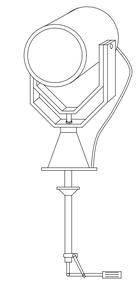

SEALED BEAM SPOTLIGHT, MOUNTED TO GUARD TOWER ROOF, WITH 1000 WATT HALOGEN NARROW SPOT PAR 56 LAMP. SPOTLIGHT SHALL BE PROVIDED WITH TWIST LEVER CONTROL, MINIMUM 10" DIAMETER LIGHT HEAD, WORKING RANGE OF 1/2 MILE, COUPLING FOR OPERATION FROM GUARD TOWER PLATFORM AND RATED FOR OUTDOOR ROUGH SERVICE WITH ANTI-SHOCK LAMPHOLDER.

FIXTURE MARK H

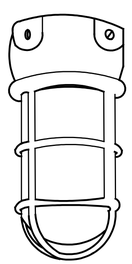

TYPE SF11

FEATURES

LAMP TYPE: INCCANDESCENT BULB: 100W
GLASS GLOBE CLEAR, BLUE, RED, AND BLACK LAMPS INDICATED ON THE DRAWINGS
PROFILE: 1 LAMP
SHIELDING: CLEAR GLASS GLOBE

OPTIONS

GLASS GLOBE: CLEAR, RED, BLUE, OR BLACK
LAMP TYPE: 75W, 100W, 150W
MOUNTING: PENDANT OR SURFACE
SHIELDING: HEAT RESISTANT

NOM. DIMENSIONS: 111mm X 251mm

GENERAL DESCRIPTION

HOUSING: 30 PERCENT GLASS FILLED THERMOPLASTIC POLYSTER
ELECTRICAL: 220 – 240 VOLT
FINISH: MOLDED IN NON-GRAYING FINISH

SURFACE MOUNTED INCANDESCENT
VAPOR TIGHT JELLY JAR WITH WIRE GUARD

NOT TO SCALE

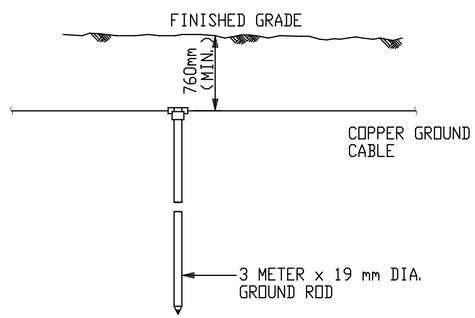

NOTES:

1. CONDUCTOR SIZE SHALL BE AS INDICATED ON PLANS.
2. EXOTHERMIC WELDS SHALL BE AS RECOMMENDED BY MANUFACTURER FOR THE SIZE OF CONNECTION AND MATERIAL INVOLVED. SEE DETAIL 5 ON SHEET SE-7.

BELOW GRADE GROUNDING ROD DETAIL

NOT TO SCALE

DETAIL 1
NOT TO SCALE

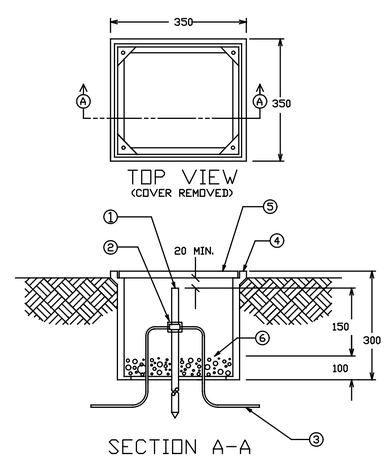

MATERIAL LIST

1. GROUND ROD
2. EXOTHERMIC WELD
3. GROUNDING CONDUCTOR 70mm² COPPER
4. POLYMER CONCRETE FIBERGLASS REINFORCED BOX
5. COVER FOR ABOVE BOX
6. GRAVEL OR CRUSHED STONE

GROUND ROD ACCESS
BOX INSTALLATION DETAIL

NOT TO SCALE

DETAIL 2
NOT TO SCALE

UNLESS OTHERWISE NOTED, LINEAR DIMENSIONS SHOWN ARE IN MILLIMETERS.

SYMBOL	DESCRIPTION	DATE	APR

DESIGNED BY: MM
DWN BY: MM
CHK BY: SE
DATE: 29 OCTOBER 2007
SUBMITTED BY:
FILE NO.: AF06073-EL02DT

US Army Corps of Engineers
Afghanistan Engineer District

AFGHANISTAN NATIONAL POLICE (ANP) DISTRICT HEADQUARTERS COMPOUNDS – 1 STORY HQ
VARIOUS LOCATIONS, AFGHANISTAN
STANDARD DETAILS
STANDARD LIGHTING DETAILS

SHEET REFERENCE NUMBER:
SE-2

10/24/2007
S:\Engineering & Construction\Engineering\00_RFPs in-progress\ANP\ANP ONE-Story Design\ANP Dist HQ 1Story Design Changes 26Oct07\Microstation files\elec\AF06073$EL02DT.dgn

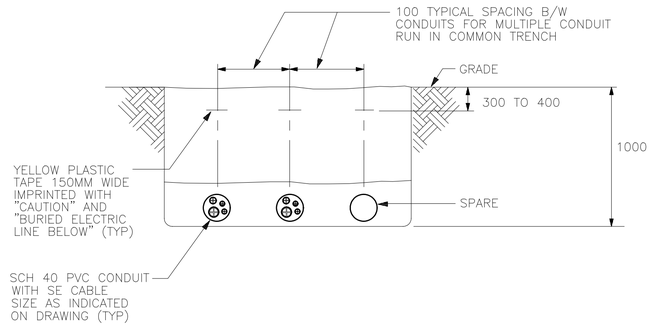

SECONDARY DISTRIBUTION CONDUIT TRENCH DETAIL

NOT TO SCALE

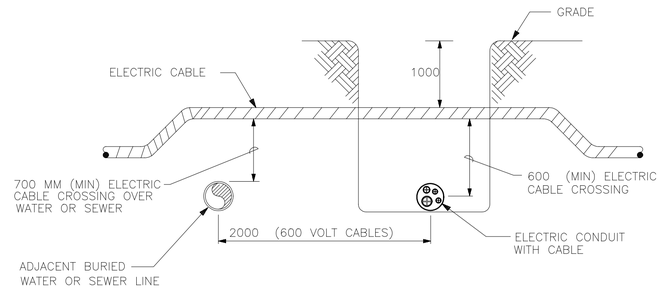

UNDERGROUND UTILITIES CROSSING DETAIL

NOT TO SCALE

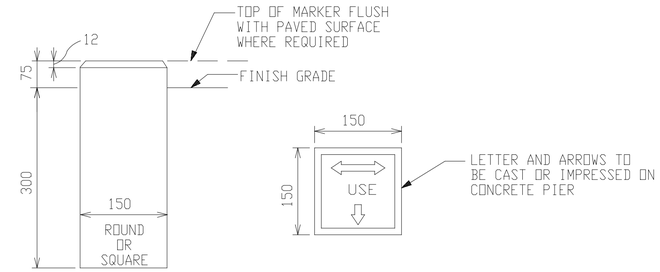

DIRECT BURIED CABLE MARKER DETAIL

NOT TO SCALE

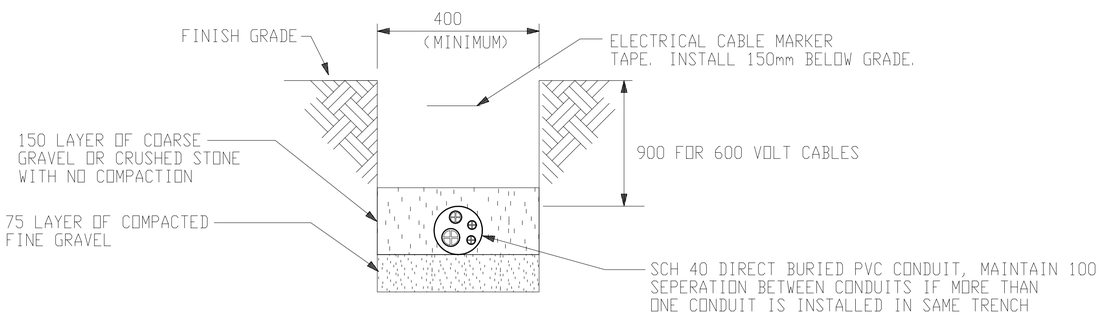

DIRECT BURIED DUCT DETAIL

NOT TO SCALE

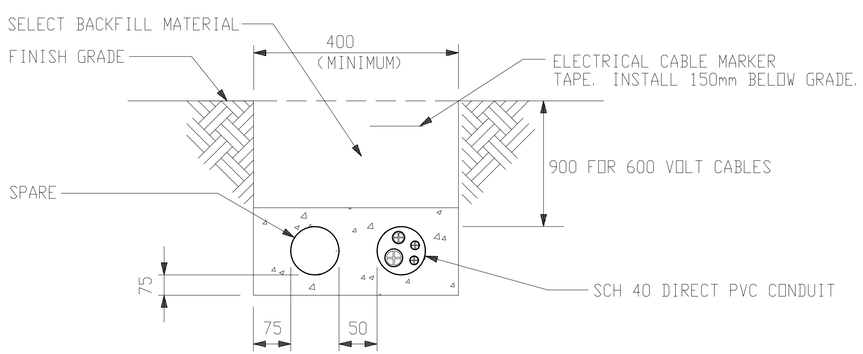

CONCRETE-ENCASED DUCT DETAIL FOR TRAFFIC AREAS

NOT TO SCALE

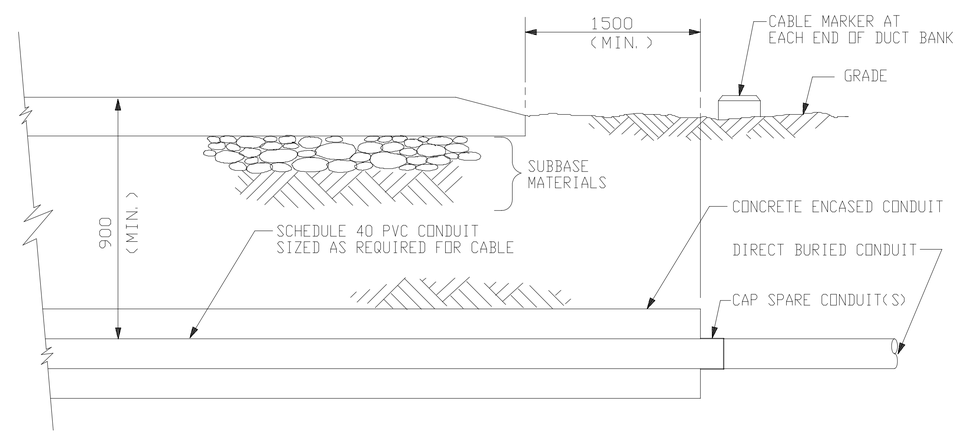

UNDER ROADWAY DUCT CROSSING DETAIL

NOT TO SCALE

UNLESS OTHERWISE NOTED, LINEAR DIMENSIONS SHOWN ARE IN MILLIMETERS.

UNLESS OTHERWISE NOTED, LINEAR DIMENSIONS SHOWN ARE IN MILLIMETERS.

SYMBOL	DESCRIPTION	DATE	APR

DESIGNED BY: MM	DATE: 29 OCTOBER 2007	
DWN BY: MM	SUBMITTED BY:	
CHK BY: SE	FILE NO.: AF06073-EL03DT	

US Army Corps of Engineers
Afghanistan Engineer District

AFGHANISTAN NATIONAL POLICE (ANP) DISTRICT HEADQUARTERS COMPOUNDS – 1 STORY HQ
VARIOUS LOCATIONS, AFGHANISTAN

STANDARD DETAILS
DUCTBANK DETAILS

SHEET REFERENCE NUMBER:
SE–3

10/24/2007
S:\Engineering & Construction\Engineering\00_RFPs in-progress\ANP\ANP ON-Story Design\ANP Dist HQ 1Story Design Changes 26Oct07\Microstation Files\elec\AF06073EL03DT.dgn

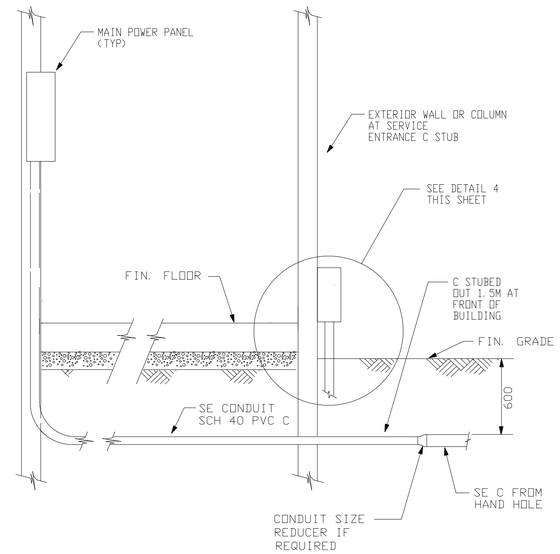

SERVICE PANEL CABLE ENTRANCE DIAGRAM
NOT TO SCALE

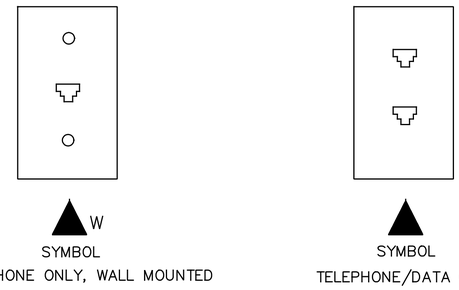

TELEPHONE AND DATA OUTLET DETAILS
NOT TO SCALE

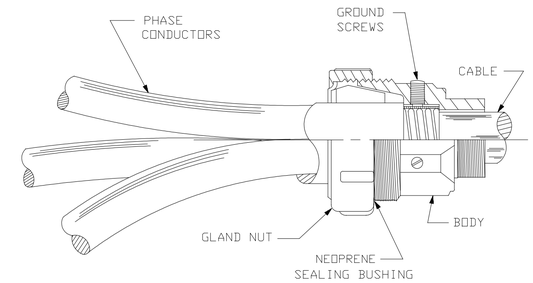

TYPICAL 600V CABLE TERMINATOR DETAIL
NOT TO SCALE

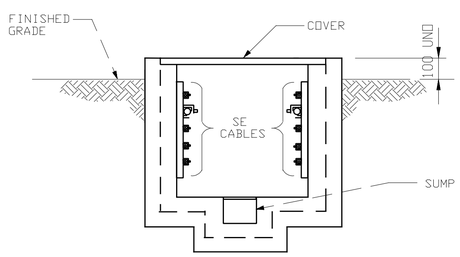

HANDHOLE CABLE INSTALLATION
NOT TO SCALE

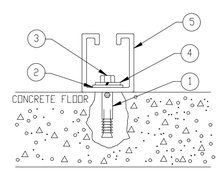

CHANNEL STRUT INSTALATION

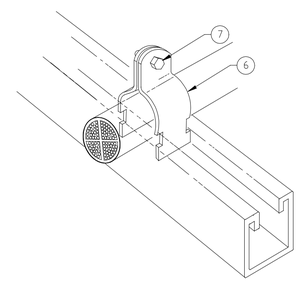

CABLE CLAMP INSTALLATION
NOT TO SCALE

CHANNEL SYSTEM LIST OF MATERIALS					
ITEM	SML	DESCRIPTION	PART NO/NSN	UI	QTY
1		SHIELD, EXPANSION			
2		WASHER, FLAT 3/8 " ID			
3		BOLT,LAG,HEX HEAD, 3/8 "-16 X 1 1/4 "			
4		WASHER, LOCK 3/8 " ID			
5		CHANNEL, CONT. SLOTTED 1-5/8"			
6		CONDUIT / CONDUCTOR CLAMP			
7		SLOTTED HEX MACHINE SCREW & SQUARE NUT			

CONDUIT / CONDUCTOR CHANNEL SYSTEM INSTALLATION DETAIL
NOT TO SCALE

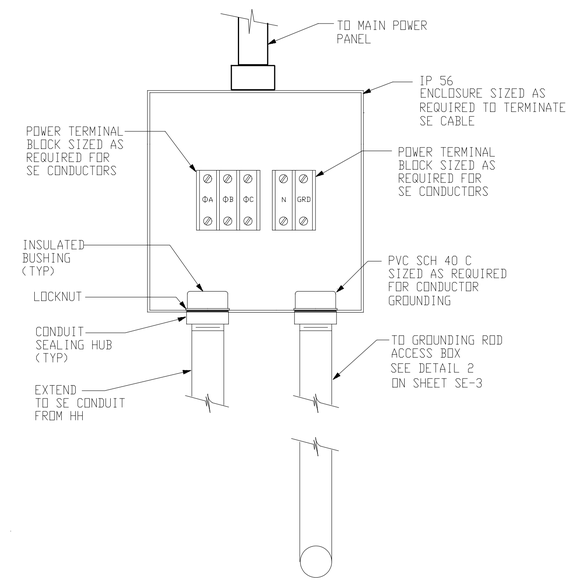

SE JUNCTION BOX
NOT TO SCALE

DETAIL 4
NOT TO SCALE

UNLESS OTHERWISE NOTED, LINEAR DIMENSIONS SHOWN ARE IN MILLIMETERS.

SYMBOL	DESCRIPTION	DATE	APR

DESIGNED BY: MM
DATE: 29 OCTOBER 2007
DWN BY: MM
SUBMITTED BY:
CHK BY: SE
FILE NO.: AF06073-EL04DT

US Army Corps of Engineers
Afghanistan Engineer District

AFGHANISTAN NATIONAL POLICE (ANP) DISTRICT HEADQUARTERS COMPOUNDS – 1 STORY HQ
VARIOUS LOCATIONS, AFGHANISTAN
STANDARD DETAILS
STANDARD ELECTRICAL DETAILS

SHEET REFERENCE NUMBER:
SE-4

10/24/2007
S:\Engineering & Construction\Engineering\00 RFPs in-progress\ANP\ANP ON 1-Story Design\ANP 1-Story Dist HQ 1Story Design Changes 26Oct07\Microstation Files\elec\AF06073EL04DT.dgn

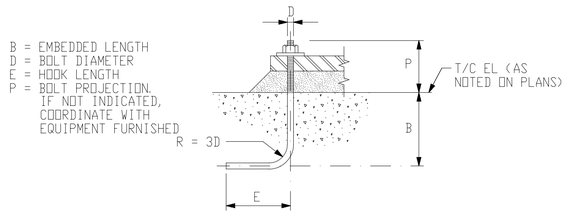

NOTE:
UNLESS OTHERWISE INDICATED, TYPE V OR VI ANCHOR RODS MAY BE USED AT THE CONTRACTOR'S OPTION

SCHEDULE			
D (IN)	B (mm)	E (mm)	REMARKS
3/8"	125	125	
1/2"	150	150	
5/8"	200	180	
3/4"	255	220	
7/8"	305	280	
1"	355	330	

TYPE V ANCHOR RODS
HOOKED BOLT

SCHEDULE			
D (IN)	B (mm)	E (mm)	REMARKS
3/8"	180	75	
1/2"	230	75	
5/8"	280	100	
3/4"	355	125	
7/8"	405	180	
1"	485	200	

TYPE VI ANCHOR RODS
HOOKED BOLT

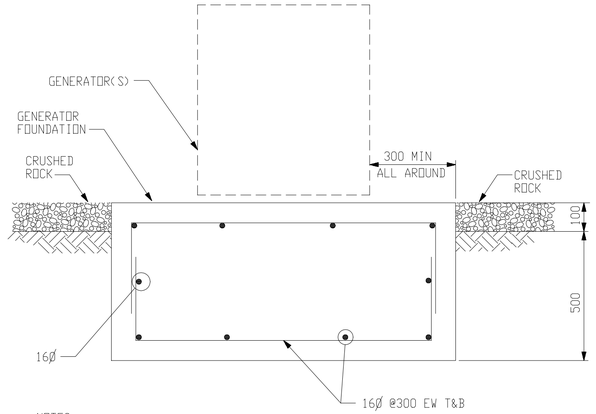

NOTES:
1. SEE DRAWING XE-1 FOR GENERATOR LOCATIONS.
2. COORDINATE PAD SIZE AND ANCHOR BOLT REQUIREMENTS WITH THE EQUIPMENT SUPPLIED.

TYPICAL EXTERIOR GENERATOR FOUNDATION
NOT TO SCALE

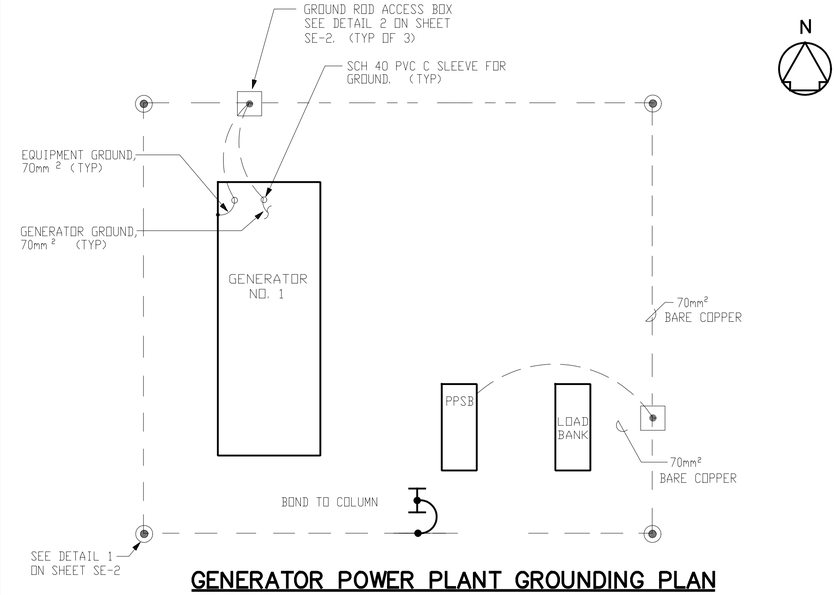

GENERATOR POWER PLANT GROUNDING PLAN
NOT TO SCALE

NOTES:
1. GROUNDING COUNTERPOISE SHALL BE 1.5M AWAY FROM GENERATOR PAD FOUNDATION AND 0.760M BELOW FINISHED GRADE.
2. ALL GROUNDING CONNECTIONS SHALL BE EXOTHERMIC WELD CONNECTIONS,
3. A DAY TANK SHALL BE AN INTEGRAL PART OF EACH GENERATOR SET.
4. GENERATORS, DAYTANKS, PPSB AND LOAD BANK SHALL HAVE NEMA 3R OR EQUAL ENCLOSURES.

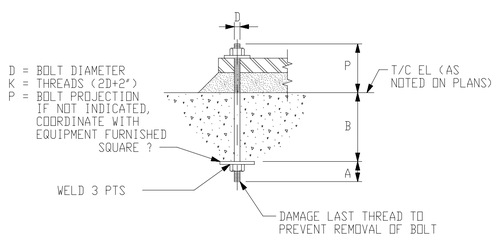

SCHEDULE				
D	A	B	SQUARE ?	REMARKS
3/4	50mm	250mm	?13x75x75	
7/8	75mm	300mm	?16x90x90	
1 1/8	75mm	400mm	?20x100x100	
1 1/4	75mm	460mm	?20x110x110	

TYPE II ANCHOR RODS
UNSLEEVED BOLT

TYPICAL ANCHOR ROD DETAILS
NOT TO SCALE

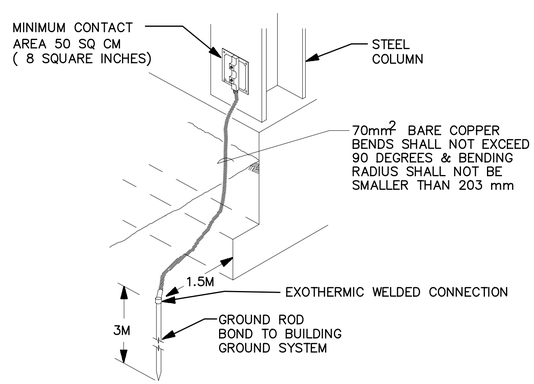

COLUMN GROUNDING DETAIL
NOT TO SCALE

UNLESS OTHERWISE NOTED, LINEAR DIMENSIONS SHOWN ARE IN MILLIMETERS.

SYMBOL	DESCRIPTION	DATE	APP

DESIGNED BY: MM
DATE: 29 OCTOBER 2007
DWN BY: JLK
SUBMITTED BY:
CHK BY: JLK
FILE NO.: AF0607$-EL05DT

US Army Corps of Engineers
Afghanistan Engineer District

AFGHANISTAN NATIONAL POLICE (ANP) DISTRICT HEADQUARTERS COMPOUNDS – 1 STORY HQ
VARIOUS LOCATIONS, AFGHANISTAN
STANDARD DETAILS
POWER PLANT DETAILS

SHEET REFERENCE NUMBER:
SE-5

10/24/2007
S:\Engineering & Construction\Engineering\00_RFPs in-progress\ANP\ANP ONE-Story Design\ANDist_HQ_1Story_Design_Changes_2607\Microstation Files\elec\AF0607$EL05DT.dgn

CONSTRUCTION REQUIREMENTS				
CLEAR MINIMUM INSIDE REQUIREMENTS FOR INSTALLATION AND MAINTENANCE PURPOSES				
TYPE	HEIGHT	LENGTH	WIDTH	SUMP DEPTH
HH	1.2M	1.2M	1.2M	0.3M

MINIMUM CONCRETE THICKNESS	
HANDHOLE WALLS TOP, AND FLOORS	SUMP WALLS AND FLOOR
150mm	100mm

MINIMUM REINFORCING

1. BARS WILL BE A MINIMUM OF 13ϕ ROUND DEFORMED.
2. WALLS AND FLOOR WILL HAVE BARS AT 200mm MAXIMUM ON CENTERS WITH A MINIMUM 300mm HOOK AT CORNERS AND INTERSECTIONS.
3. THE TOP SHALL HAVE BARS INSTALLED AS SHOWN AT A MINIMUM OF 50mm FROM THE OPENING AND WITH A MINIMUM 100mm SPACING BETWEEN BARS.

NOTE: REINFORCING SHALL BE INCREASED WHERE REQUIRED TO SUIT ACTUAL INSTALLATION. MINIMUM REQUIREMENTS ARE FOR A H20 WHEEL LOADING (ASSHTO).

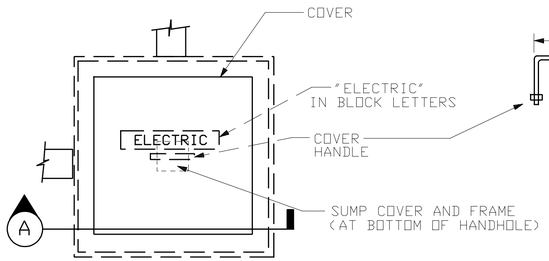

HANDHOLE COVER DETAIL
NOT TO SCALE

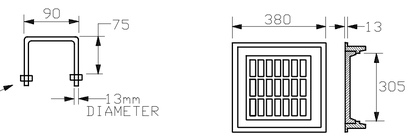

SUMP FRAME AND COVER DETAIL
NOT TO SCALE

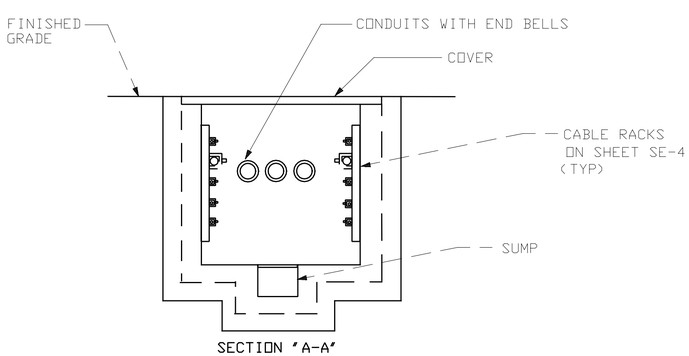

HANDHOLE DETAIL
NOT TO SCALE

UNLESS OTHERWISE NOTED, LINEAR DIMENSIONS SHOWN ARE IN MILLIMETERS.

SYMBOL	DESCRIPTION	DATE	APR

DESIGNED BY: MM
DWN BY: MM
CHK BY: SE
DATE: 29 OCTOBER 2007
SUBMITTED BY:
FILE NO.: AF06073-EL06DT

US Army Corps of Engineers
Afghanistan Engineer District

AFGHANISTAN NATIONAL POLICE (ANP) DISTRICT HEADQUARTERS COMPOUNDS – 1 STORY HQ
VARIOUS LOCATIONS, AFGHANISTAN

STANDARD DETAILS
HANDHOLE DETAILS

SHEET REFERENCE NUMBER:
SE–6

10/24/2007
S:\Engineering & Construction\Engineering\00_RFPs in-progress\ANP\ANP 01_Story Design\ANP Dist HQ 1Story Design Changes 26Oct07\Microstation files\elec\AF06073-EL06DT.dgn
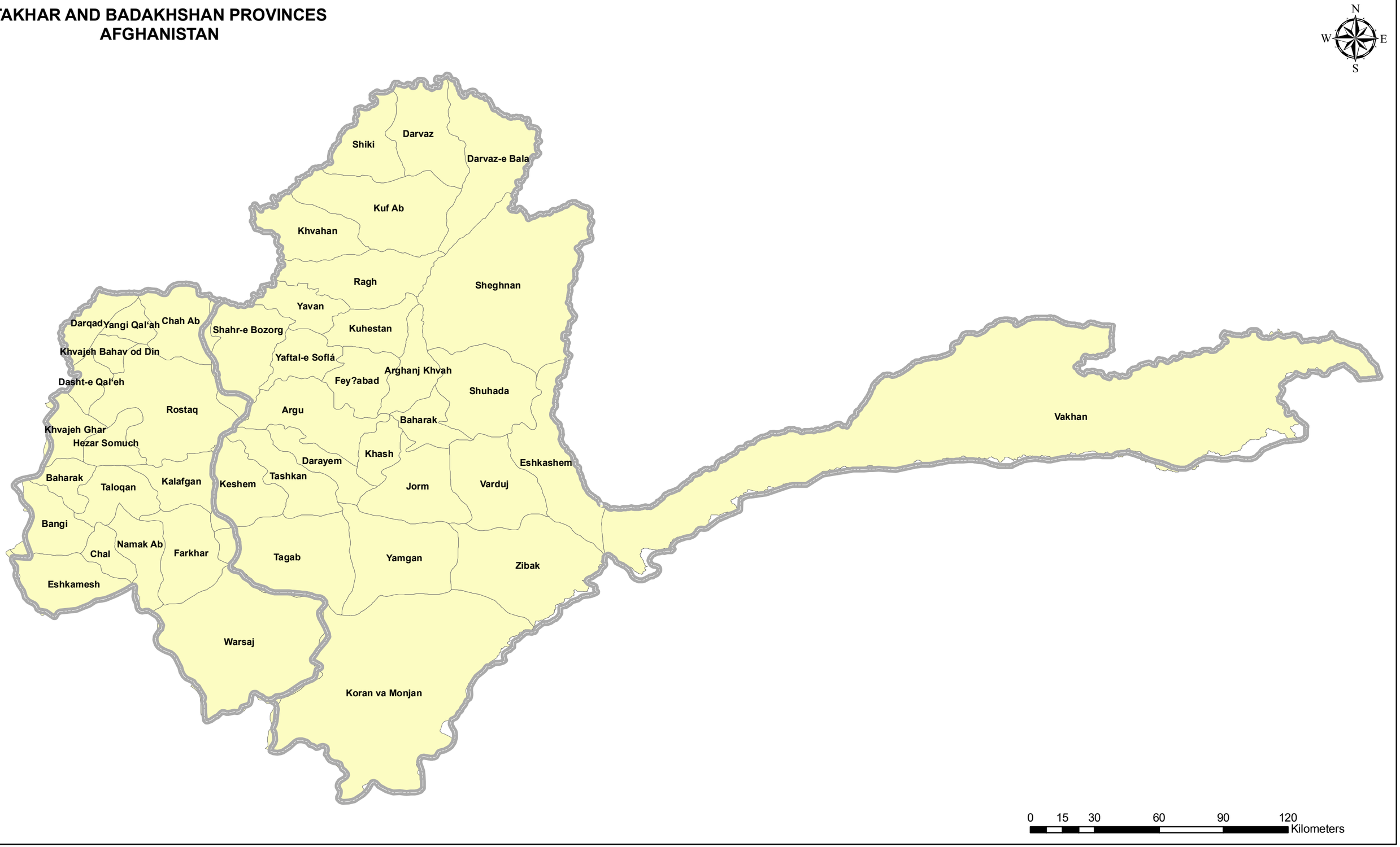
TAKHAR AND BADAKHSHAN PROVINCES
AFGHANISTAN