AMENDMENT OF SOLICITATION/MODIFICATION OF CONTRACT

1. CONTRACT ID CODE	PAGE OF PAGES	
	1	2

2. AMENDMENT/MODIFICATION NO.	3. EFFECTIVE DATE	4. REQUISITION/PURCHASE REQ. NO.	5. PROJECT NO.(If applicable)
0001	09-Apr-2009		

6. ISSUED BY	CODE W917PM	7. ADMINISTERED BY (If other than item 6)	CODE
AFGHANISTAN ENGINEER DISTRICT US ARMY CORPS OF ENGINEERS KABUL APO AE 09356		**See Item 6**	

8. NAME AND ADDRESS OF CONTRACTOR (No., Street, County, State and Zip Code)			
		X	9A. AMENDMENT OF SOLICITATION NO. W917PM-09-R-0025
		X	9B. DATED (SEE ITEM 11) 26-Mar-2009
			10A. MOD. OF CONTRACT/ORDER NO.
			10B. DATED (SEE ITEM 13)
CODE	FACILITY CODE		

11. THIS ITEM ONLY APPLIES TO AMENDMENTS OF SOLICITATIONS

[X] The above numbered solicitation is amended as set forth in Item 14. The hour and date specified for receipt of Offer [ ] is extended, [X] is not extended.

Offer must acknowledge receipt of this amendment prior to the hour and date specified in the solicitation or as amended by one of the following methods: (a) By completing Items 8 and 15, and returning 1 copies of the amendment; (b) By acknowledging receipt of this amendment on each copy of the offer submitted; or (c) By separate letter or telegram which includes a reference to the solicitation and amendment numbers. FAILURE OF YOUR ACKNOWLEDGMENT TO BE RECEIVED AT THE PLACE DESIGNATED FOR THE RECEIPT OF OFFERS PRIOR TO THE HOUR AND DATE SPECIFIED MAY RESULT IN REJECTION OF YOUR OFFER. If by virtue of this amendment you desire to change an offer already submitted, such change may be made by telegram or letter, provided each telegram or letter makes reference to the solicitation and this amendment, and is received prior to the opening hour and date specified.

12. ACCOUNTING AND APPROPRIATION DATA (If required)

13. THIS ITEM APPLIES ONLY TO MODIFICATIONS OF CONTRACTS/ORDERS. IT MODIFIES THE CONTRACT/ORDER NO. AS DESCRIBED IN ITEM 14.

[ ] A. THIS CHANGE ORDER IS ISSUED PURSUANT TO: (Specify authority) THE CHANGES SET FORTH IN ITEM 14 ARE MADE IN THE CONTRACT ORDER NO. IN ITEM 10A.

[ ] B. THE ABOVE NUMBERED CONTRACT/ORDER IS MODIFIED TO REFLECT THE ADMINISTRATIVE CHANGES (such as changes in paying office, appropriation date, etc.) SET FORTH IN ITEM 14, PURSUANT TO THE AUTHORITY OF FAR 43.103(B).

[ ] C. THIS SUPPLEMENTAL AGREEMENT IS ENTERED INTO PURSUANT TO AUTHORITY OF:

[ ] D. OTHER (Specify type of modification and authority)

E. IMPORTANT: Contractor [ ] is not, [ ] is required to sign this document and return _____ copies to the issuing office.

14. DESCRIPTION OF AMENDMENT/MODIFICATION (Organized by UCF section headings, including solicitation/contract subject matter where feasible.)

Project: ANA, KMTC New Water Source, Kabul, Afghanistan

The purpose of this amendment is to add Attachments A-G and replace Section 01335, Submittal Procedures and Section 01335a, Attachments - AED.

Except as provided herein, all terms and conditions of the document referenced in Item 9A or 10A, as heretofore changed, remains unchanged and in full force and effect.

15A. NAME AND TITLE OF SIGNER (Type or print)		16A. NAME AND TITLE OF CONTRACTING OFFICER (Type or print) TEL: EMAIL:	
15B. CONTRACTOR/OFFEROR (Signature of person authorized to sign)	15C. DATE SIGNED	16B. UNITED STATES OF AMERICA BY (Signature of Contracting Officer)	16C. DATE SIGNED 09-Apr-2009

SECTION SF 30 BLOCK 14 CONTINUATION PAGE

SUMMARY OF CHANGES

(End of Summary of Changes)

SECTION 01335

SUBMITTAL PROCEDURES FOR DESIGN-BUILD PROJECTS

PART 1 GENERAL

1.1 REFERENCE

The publication listed below forms a part of this specification to the extent referenced. The publication is referenced to in the text by basic designation only.

CONSTRUCTION SPECIFICATIONS INSTITUTE

Manual of Practice
Construction Specifications Institute
http://www.csinet.org/s_csi/index.asp
601 Madison Street
Alexandria, Virginia
22314-1791

NATIONAL INSTITUTE OF BUILDING SCIENCES (NIBS)

Unified Master Reference List (UMRL)
National Institute of Building Sciences
1090 Vermont Avenue, NW, Suite 700
Washington, DC 20005-4905
Email: nibs@nibs.org
FAX: (202) 289-1092
Tele: (202) 289-7800

AFGHANISTAN ENGINEER DISTRICT

AFGHANISTAN ENGINEER DISTRICT
http://www.aed.usace.army.mil
U.S. Army Corps of Engineers
Attention: Qalaa House
APO AE 09356

1.2 SUBMITTAL CLASSIFICATION

Submittals are classified as follows.

1.2.1 DESIGN SUBMITTALS

Contractor furnished design submittals are the various design documents which primarily consist of field investigations, calculations, design analysis, drawings and specifications.

In addition, for every Design Submittal, the Contractor shall submit all non-administrative modifications issued for the Contract as part of the Design Submittal package to enable AED to validate that these modifications have been incorporated into this design submittal.

The Contractor shall clearly label and date all Design Submittals to reflect the current design stage and date of submission to the Government to avoid confusion between current and previous submittals. The Design-Build Contractor shall not begin construction work until the Government has reviewed the Design-Build Contractor's concept, intermediate and final designs and has cleared them for construction. Clearance for construction shall not be construed as meaning Government approval. Unless otherwise indicated, the risk for the design is the sole responsibility of the Design-Build Contractor.

As a minimum, design submittals shall be submitted at the following intervals:

Concept design - 35%

General design - 65%

Final design review - 99%

Cleared For Construction review - 100%

1.2.1.1 CONCEPT DESIGN (35%)

The review of this submittal is primarily to ensure that the Contractor has taken an inventory of the existing conditions at each proposed site, has established the most desirable functional relationships between the various project elements, has provided the technical solution as to how the functional and technical requirements will be met, and to show Contractor compliance (or justify noncompliance) with the design parameters and/or requirements. As a minimum, the following documents shall be submitted:

It is crucial that the submittal is complete and includes all components noted below and any other pertinent information not listed which the Contractor requires to enable construction to begin as soon as possible. As a minimum, for each Contract project location the submittal shall contain:

a. Complete design analysis, plans and specifications for any contract feature(s) that the Contractor would like Partial Clearance for Construction on once the 35% Design Submittal has been approved, including project components with long ordering, fabrication and delivery times. Other preliminary drawings, specifications and design analysis of work features that are intended for submittal/approval at the 65% Design Submittal, or later, stage shall be included such that a thorough and complete understanding of this work can be accomplished as part of the 35% review. Specifications for contract features proceeding after approval of this Design Submittal shall include those Construction Submittal items requiring Government Approval (GA).

For work shown but incomplete and still under design, the Contractor should clearly indicate on the ENG Form 4025 what is being submitted for review and approval.

b. Outline of all Construction Specification Sections to be used and those Specification items requiring Government Approval (GA).

c. Well design at each project site location to include a determination of water demand, water availability evaluation, and water quality analysis. Water demand evaluation shall be determined based on the requirements of the 01010 SOW and 01015 Technical Requirements. Water availability evaluation shall include data concerning study of existing water wells in the vicinity, study of hydrological data, and study of geological data. Well hydraulics data shall also be included from the test well or if available from vicinity wells. Water quality analysis shall include physical, chemical, and bacteriological analyses of water from either a test well or an existing well within the same aquifer of the proposed well.

   Drawing for the well design shall include, at a minimum, material and dimensions of well pipe and casing, type and dimensions of screen, type and range of sizes of gravel surrounding screen and at bottom of well shaft, type of grouting for well seal, well pad, location and connection detail for hand pump if required by the 1010. Also required would be a detail of the wellhead with all associated valves, flowmeters, and chlorination system.

d. Results of the site topographic survey (in accordance with Paragraph 3.9.6.3 through 3.9.6.5 of this Section) which shall include highlighting of significant features (wadis, adjacent properties and structures, roads, etc.) to provide a detailed, overall understanding of the project site and surrounding area; demolition plan for existing site features; complete grading and drainage plan with existing grades, proposed grades, and building finished floor elevations based on Contract technical requirements;

e. Any necessary adaptations of the Concept Plan and detailed design drawings furnished with this Contract that might be required due to actual site constraints, to include: water supply/storage location and distribution layout plan; wastewater collection or treatment location and tie-in to all required buildings; electrical

generation and distribution plan; connection of existing roads with ECP location(s); and any other changes required due to adjacent property or existing topography. This would also include proposed changes to any furnished detailed drawings if site conditions or other requirements mandate revisions.

f. Geotechnical Report, indicating appropriate information for various site characteristics, soil parameters as determined by certified lab tests, allowable soil bearing capacities, correlation with foundation design parameters, and any changes in foundation design of structures furnished in the Contract; estimated settlement for building foundation loads; and all other project feature changes due to the Geotechnical Report conclusions.

g. Septic Tank drawings and details (if required by Section 01010 of the SOW), showing tank depth and sizing based on expected sanitary load, and all connecting piping, with dimensions.

h. Percolation test locations and results, and complete leachfield design (if required by Section 01010 of the SOW), which indicate the site will accommodate such a system for the given project requirements, and alternatives proposed if, and only if, the site characteristics will not support such a system.

i. Preliminary drawing and details of any grease interceptors and oil-water separators required. Grease interceptors should either be gravity or hydro-mechanical types. Drawings would show sizing, depth, and all connecting piping. Design analysis shall include calculations for sizing both the interceptor/separator and connecting piping.

j. Preliminary cross sections of roads and sidewalks, showing all essential dimensions, materials, layers, and proposed fore and back slopes of adjacent drainage features.

k. All preliminary sketches of site storm drainage structures, including calculations in the design analysis for sizing and sloping of pipe runs and ditches. Provide cross sections of drainage structures such as ditches and culverts.

l. Remaining features of work shown on 35% design complete Plans;

1.2.1.2 GENERAL DESIGN REVIEW (65%):

The review of this submittal is primarily to insure that the contract documents and design analysis are proceeding in a timely manner and that the Contract requirements and design criteria are being correctly understood and adhered to. The submittal shall consist of the following:

a. Complete design analysis, plans and specifications for any contract feature(s) that the Contractor would like Partial Clearance for Construction on once the

65% Design Submittal has been approved, including list of those Construction Submittal items requiring Government Approval (GA).

b. For all other work, provide a Draft Construction Specifications complete - all anticipated sections, edited to include only applicable requirements.

c. Construction Drawings complete for all work to be completed until the 99% Final Design Review Submittal is provided, with all past Design Review comments incorporated. The Contractor is expected to have completed all of his coordination checks and have the drawings in a design complete condition. The drawings shall contain all the details necessary to assure a clear understanding of the work throughout construction.

For work shown but incomplete and still under design, the Contractor should clearly indicate on the ENG Form 4025 what is being submitted for review and approval.

1.2.1.3 FINAL DESIGN REVIEW (99%):

The review of this submittal is primarily to insure that the contract documents and design analysis are nearing completion and that the Contract requirements and design criteria are being correctly understood and adhered to. The submittal shall consist of the following:

a. Design Analysis complete with all prior comments incorporated.

b. Draft Construction Specifications complete - all anticipated sections, edited to include only applicable requirements.

c. Construction Drawings complete with all 65% comments incorporated. The Contractor is expected to have completed all of his coordination checks and have the drawings in a design complete condition. The drawings shall be finalized at this time including the incorporation of any design review comments generated by all past design reviews. The drawings shall contain all the details necessary to assure a clear understanding of the work throughout construction.

1.2.1.4 “CLEARED FOR CONSTRUCTION” SUBMITTAL (100%):

The review of this submittal is to insure that the design is in accordance with all Contract requirements and any directions provided the Contractor during the design process. The only effort remaining between the Final Design Review Submittal and the "Cleared For Construction" Design Review Submittal is the incorporation of all Government review comments. The Contractor shall submit the following documents for this review:

a. Design Analysis, only if changes have occurred since 99% Design Submittal. The Design Analysis shall contain all explanatory material giving the design

rationale for any design decisions which would not be obvious to an engineer reviewing the Final Drawings and Specifications.

b. Construction Specifications, complete.

c. Construction Drawings, complete.

Once the design documents have been "Cleared for Construction" by the Contracting Officer, the Contractor shall clearly identify each document by annotating it as "Cleared for Construction."

1.2.2 PARTIAL DESIGN SUBMITTALS

In the interest of expediting construction, the Contracting Officer may approve partial design submittals, procurement of materials and equipment, as well as issue the Notice To Proceed (NTP) for construction of those elements of the design which have been cleared for construction. Such partial notices to proceed shall be solely at the discretion of the Contracting Officer. The Contractor must obtain the approval of the Designer of Record (DOR) and the Government's concurrence for any Contractor proposed revision to the professionally stamped and sealed design reviewed and Cleared for Construction by the Government, before proceeding with the revision. The Government reserves the right to non-concur with any revision to the design, which may impact furniture, furnishings, equipment selections or operations decisions that were made, based on the reviewed and cleared for construction design. Any revision to the design, which deviates from the contract requirements (i.e., the RFP and the accepted proposal), will require a modification, pursuant to the Changes clause, in addition to Government concurrence. The Government reserves the right to disapprove such a revision. Unless the Government initiates a change to the contract requirements, or the Government determines that the Government furnished design criteria are incorrect and must be revised, any Contractor initiated proposed change to the contract requirements, which results in additional cost, shall strictly be at the Contractor's expense. The Contractor shall track all approved revisions to the reviewed and cleared for construction design and shall incorporate them into the As-Built design documentation, in accordance with Section 01780A, CLOSEOUT SUBMITTALS, Paragraphs 1.1 and 1.2, which lists all requirements associated with submission of editable CADD format As-Builts required as part of this contract. The Designer of Record shall document its professional concurrence on the As-Builts for any revisions by affixing its stamp and seal on the drawings and specifications.

1.2.3 USE OF DrChecks$_{SM}$ FOR DESIGN SUBMITTAL COMMENT AND RESPONSE

1.2.3.1 DrChecks$_{SM}$ WEB LINK

All AED Design Submittal review comments will be documented using the standard design review tool for the U.S. Army Corps of Engineers, a web-based application called "DrChecks$_{SM}$". The web link to DrChecks$_{SM}$ is: https://www.projnet.org/projnet/binKornHome/index.cfm

1.2.3.2 DrChecks$_{SM}$ VENDOR IDENTIFICATION AND TUTORIAL

Upon notification of award, the contractor shall immediately coordinate with the Chief, Engineering Branch, AED to acquire a vendor identification and a brief tutorial on the use of DrChecks$_{SM}$. The contractor is responsible for providing their own DrChecks$_{SM}$ Administrator within their own design staff personnel to access and accomplish actions within DrChecks$_{SM}$.

1.2.3.3 NOTIFICATION OF DrChecks$_{SM}$ FILE ACCESS

The Afghanistan Engineer District will complete a review at every Design Submittal stage for conformance with the technical requirements of the Contract and document all comments in DrChecks$_{SM}$. At completion of the review, a notification will be issued to the Contractor by the Contracting Officer's representative that the particular DrChecks$_{SM}$ file will be opened to the Contractor. Until this time, the Contractor is not able to view any AED comments for that particular Design Submittal.

1.2.3.4 FURTHER CONTRACTOR INFORMATION AFTER DrChecks$_{SM}$ REVIEWS

See Paragraph 3.7.4, Government Review, for further procedures and requirements associated with Design Submittal reviews.

1.2.4 CONSTRUCTION SUBMITTALS

1.2.4.1 Contractor Furnished Government Approved Construction Submittals (GA)

Government approved construction submittals are primarily related to plans (Contractor Quality Control, Accident Prevention, Resident Management System, Area Use, etc.), schedules (Project Schedule/Network Analysis), and certificates of compliance, reports and records/statements. They may also include proposed variations to approved design documents in accordance with the paragraph entitled "VARIATIONS".

In addition, GA construction submittals are required for the following:

a. CIVIL FEATURES

TESTING RESULTS: Data will include information on the locations and depths of all viable water supply sources at the site(s) involved and a water quantity and

water quality analysis for each source from the Ministry of Public Health or other certified testing firm.

b. MECHANICAL FEATURES

EQUIPMENT SUBMITTALS: Manufacturer's standard catalog data, installation, Operation and Maintenance (O&M) manuals and construction details for water wells, water tanks, control valves, pipe insulation, water pumps, air handling units, condensers, variable air volume (VAV) boxes.

TESTING RESULTS: For water tanks, water pumps (including instrumentation), water piping, sprinkler systems, and oxygen systems, submit six (6) copies of each test containing the following information in bound letter-size booklets:

> 1) The date the tests were performed. 2) A list of equipment used, with calibration certifications. 3) A copy of measurements taken. 4) The parameters to be verified. 5) The condition specified for the parameter. 6) The inspection results, signed, dated, and certified by the installer. The certification shall state that required procedures were accomplished, that the procedures were conducted in compliance the plans and specifications. 7) A description of adjustments performed.

Individual reports shall be provided for storage tank tests, piping tests, system performance tests, high level alarm test, and the system leak tests. Drawings shall be folded blue lines, with the title block visible.

c. ELECTRICAL FEATURES

PRODUCT DATA and SHOP DRAWINGS: generators (and its auxiliaries), load bank, transformers, substations, panels/switchboards/motor control centers, lightning protection, receptacles, circuit breakers.

DESIGN DATA: lightning protection and grounding.

TEST DATA: Lightning protection and grounding.

d. ARCHITECTURAL FEATURES

PRODUCT DATA/CATALOGUE CUTS/SHOP DRAWINGS/SCHEDULES: Specialty doors and frames (fire rated, sound rated, bullet resistant, security, overhead rolling); door hardware; windows; metal roofing (including fasteners, flashing, and accessories); building insulation; fire-rated and water-resistant gypsum board; and other specialty products (bullet resistant glazing/panels).

COLOR BOARD: Architectural finishes

PRODUCT DATA/CATALOGUE CUTS/INSTALLATION INSTRUCTIONS: Exterior Insulation and Finish System (EIFS)

SHOP DRAWINGS: Casework/Cabinetry

1.2.4.2 For Information Only Construction Submittals (FIO)

All submittals not requiring Designer of Record or Government approval will be for information only. These construction submittals shall be checked, stamped, signed and dated by the Contractor's Quality Control Engineer, certifying that such submittal complies with the contract requirements. All Contractor submittals shall be subject to review by the Government at any time during the course of the contract. Any Contractor submittal found to contain errors or omissions shall be resubmitted as one requiring "approval". No adjustment for time or money will be allowed for corrections required as a result of noncompliance with plans or specifications. Normally submittals For Information Only will not be returned. Approval of the Contracting Officer is not required on FIO submittals. These submittals will be used for information purposes. The Government reserves the right to require the Contractor to resubmit any item found not to comply with the contract. This does not relieve the Contractor from the obligation to furnish material conforming to the plans and specifications and will not prevent the Contracting Officer from requiring removal and replacement if nonconforming material is incorporated in the work.

1.2.4.3 Variations

After design submittals have been reviewed and cleared for construction by the Contracting Officer, no submittal for the purpose of substituting materials, equipment, systems, and patented processes will be considered by the Government unless submitted in accordance with the paragraph entitled VARIATIONS.

1.2.4.4 Additional Shop Drawings and Submittals

In accordance with the paragraph entitled DESIGN DISCREPANCIES, the Government may request the Design-Build Contractor to provide additional shop drawing and submittal type data subsequent to completion of the design.

1.2.4.5 Incomplete Design

The Design-Build Contractor shall not use construction submittals as a means to supplant and/or supplement an incomplete design effort.

1.3 SUBMITTAL CERTIFICATION

The CQC organization shall be responsible for certifying that all submittals and deliverables have been reviewed in detail for completeness, are correct, and are in

strict conformance with the contract drawings, specifications, and reference documents.

1.3.1 Effective Quality Control System

The Contractor is responsible for quality control and shall establish and maintain an effective quality control system in compliance with Contract Clause 52.236-21 SPECIFICATIONS AND DRAWINGS FOR CONSTRUCTION - ALTERNATE I, and SECTION 01451 CONTRACTOR QUALITY CONTROL.

1.3.1.1 Organizational Responsibility

The quality control system shall cover all design, construction, subcontractor, manufacturer, vendor, and supplier operations at any tier, both onsite and offsite.

1.3.1.2 CQC System Manager Review and Approval

Prior to submittal, all items shall be checked and approved by the Contractor's Quality Control (CQC) System Manager. If found to be in strict conformance with the contract requirement, each item shall be stamped, signed, and dated by the CQC System Manager. Copies of the CQC organizations review comments indicating action taken shall be included within each submittal.

1.3.1.3 Determination of Compliance

Each submittal shall be complete and in sufficient detail to allow ready determination of compliance with contract requirements by the Contracting Officer. The contractor shall submit all required documentation with submittals. The U.S. Army Corps of Engineer (USACE) will not accept partial submittals.

1.3.2 Responsibility for Errors or Omissions

It is the sole responsibility of the Contractor to ensure that submittals do or do not comply with the contract documents. Government review, clearance for construction, or approval by the Contracting Officer shall not relieve the Contractor from responsibility for any errors or omissions in such drawings, nor from responsibility for complying with the requirements of this contract.

1.3.2.1 Government Review

Government review, clearance for construction, or approval of Design and construction submittals shall not be construed as a complete check, but will indicate only that the general method of construction, materials, detailing and other information are satisfactory. Approval will not relieve the Contractor of the responsibility for any error which may exist, as it is the sole responsibility of the

Contractor to certify that each Submittal has been reviewed in detail and is in strict conformance with all the contract documents and design criteria referenced therein.

1.3.3 Substitutions

After design submittals have been reviewed and cleared for construction by the Contracting Officer, no resubmittal for the purpose of substituting materials or equipment will be considered unless justified as indicated in the paragraph entitled VARIATIONS.

1.3.4 Additional Submittals

In conjunction with Contract Clause 52.236-5 MATERIAL AND WORKMANSHIP, the Contracting Officer may request submittals in addition to those specified when deemed necessary to adequately describe the work.

1.3.5 Untimely and Unacceptable Submittals

If the Contractor fails to submit submittals in a timely fashion, or repetitively submits submittals that are incomplete or not in strict conformance with the contract documents, no part of the time lost due to such actions shall be made the subject of claim for extension of time or for excess costs or damages by the Contractor.

1.3.6 Stamps

Stamps shall be used by the Contractor on all design and post design construction submittals to certify that the submittal meets contract requirements and shall be similar to the following:

Contractor (Firm Name)
Contract Number
Contract Name

I certify that this submittal accurate, is in strict conformance with all contract requirements, has been thoroughly coordinated and cross checked against all other applicable disciplines to prevent the omission of vital information, that all conflicts have been resolved, and that repetition has been avoided and, it is complete and in sufficient detail to allow ready determination of compliance with contract requirements by the Contracting Officer.

Name of CQC System Manager: _____

Signature of CQC System Manager: _____

Date: _____

1.4 ENGLISH LANGUAGE

All specifications, drawings, design analysis, design calculations, shop drawings, catalog data, materials lists, and equipment schedules submitted shall be in the English language. However, the local language of host country shall be added to project As-Built drawings.

1.5 UNITS OF MEASUREMENT

Design documents shall be prepared in accordance with the guidance offered in SECTION 01415 METRIC MEASUREMENTS.

The metric units used are the International System of Units (SI) developed and maintained by the General Conference on Weights and Measures (CGPM); the name International System of Units and the international abbreviation SI were adopted by the 11th CGPM in 1960.

1.5.1 Drawings

1.5.1.1 Site Layout

All site layout data shall be dimensioned in meters or coordinates, as appropriate. All details and pipe sizes shall be dimensioned in millimeters.

EXAMPLE: Masonry openings shall be a U.S. module to suit a standard U.S. door. The dimensions of the opening shall be given in SI units. Metric dimensions for site plans shall be in meters and fraction thereof. Dimensions for all other drawings shall be in millimeters using hard metric designations (example: 12 meters = 12 000). Hard metric is defined as utilizing standard metric products and the use of measurements in increments of fifty (50) and one hundred (100) millimeters.

1.5.1.2 Geo-reference

All site plans shall be geo-referenced using the WGS 1984 coordinate system, specifically the following: WGS 1984 UTM one 42 N. If the designer is not able to use the stated coordinate system the coordinate system used shall be correlated to the stated coordinate system. A table shall be provided within the site drawing set cross referencing the WGS84 system to that utilized. This is required to allow AED to incorporate the plans into GIS for storage, map production, and possible geospatial analysis of the different work sites.

1.5.2 Design Calculations

Calculations shall be in SI units to meet the requirements of the design. Quantities on the contract drawings stated in SI units, shall also be stated in SI units in the design analysis to match the drawings.

1.5.3 Specifications

All equipment and products shall be specified according to U.S. standards and described by appropriate units as required herein.

1.6 WITHHOLDING OF PAYMENT FOR SUBMITTALS

1.6.1 Design Submittals

Payment for Design work will not be made in whole or in part until the Government has reviewed and cleared the design for construction.

1.6.2 Construction Submittals

Payment for materials incorporated in the work will not be made if required approvals have not been obtained. In event under separate clause of the contract, the Contractor is allowed partial or total invoice payment for materials shipped from the Continental United States (CONUS), and/or stored at the site, the Contractor shall with his request for such payment, submit copies of approvals (ENG Form 4025) certifying that the materials that are being shipped and/or stored have been approved and are in full compliance with the contract technical specifications.

PART 2 PRODUCTS

2.1 GENERAL

The following are contract deliverables which expound upon and finalize the design parameters/requirements outlined within the contract documents. They shall be prepared in such a fashion that the Prime Contractor is responsible to the Government and not as an internal document between the Prime Contractor and its Subcontractors, Vendors, Suppliers, etc.

2.2 PROJECT NARRATIVE

The Project Narrative shall be a bound set and shall contain the contract Request For Proposal (RFP) Sections 01010 and 01015 (and any additional RFP sections that are appropriate). The RFP Section 01010 and 01015 shall be the latest version. Any subsequent changes to the RFP shall be clearly marked and highlighted with explanation for the changes. The Project Narrative shall also contain the general description of the project and a discussion of the design approach and design features for the project.

2.3 DESIGN ANALYSIS

2.3.1 Submittal

A design analysis, written in the English language with SI units of measure, shall be submitted for review by the Government. The design analysis is a written explanation of the project design which is expanded and revised (updated) as the design progresses. The design analysis shall contain all explanatory material giving the design rationale for any design decisions which would not be obvious to an engineer reviewing the final drawings and specifications. The design analysis contains the criteria for and the history of the project design, including criteria furnished by the Government, letters, codes, references, conference minutes, and pertinent research. Design calculations, computerized and manual, are included in the design analysis. Narrative descriptions of design solutions are also included. Written material may be illustrated by diagrams and sketches to convey design concepts. Catalog cuts and manufacturer's data for all equipment items, shall be submitted. Specific requirements for the design analysis, listed by submittal phase, are noted in Paragraph 1.2.1.

2.3.2 Format

Format of design analysis shall closely match the standard format referenced within the RFP.

2.4 DESIGN CALCULATIONS

All design calculations shall be presented such that they are easily understood, correlated with RFP requirements (Section 1010 and 1015 criteria; codes; all other applicable or pertinent criteria) and all final conclusions clearly documented and summarized. The Design Submittal must include complete information (Soil Report, percolation test results, concrete design strengths, steel material properties, electrical loads, heat gain/loss assumptions, etc.) necessary to support all design calculations in order to easily and efficiently verify the accuracy of this information and the resulting project components shown in plans and specifications.

2.4.1 Submittal

When design calculations are voluminous, they shall be bound separately from the narrative part of the design analysis. Design calculations will include a title page, table of contents, and be indexed (tabbed) to separate distinct parts of the various analysis and design actions being accomplished to support plan drawings submitted. They shall be presented in a clear, consistent and legible format in order to quickly understand the analysis and design accomplished. Presentation shall be such that a person unfamiliar with the project features and associated analysis and design can quickly understand the overall design process and procedures, review the information in conjunction with the given set of plans and specifications, and verify the suitability of all information submitted.

All design calculations shall explain the source of loading conditions with assumptions and conclusions explained. The analysis and design methods shall also be explained, including assumptions, theories and formulae. Include applicable diagrams that are clearly explained and correlated with related computations, whether computer or hand generated. The design calculations shall include a complete and comprehensive list of the criteria (and date or version of the criteria) that the design/analysis will be compared to (codes, Corps of Engineers Engineering Regulations, Engineering Manuals, etc.). Within the separable elements of design calculations, the engineer shall cite the specific code or reference paragraph or section as appropriate to indicate conformance to requirements.

At the beginning of each project component design section, present a summary of all load conditions and combinations required per applicable code or Corps of Engineers manual or regulation. Then clearly identify the particular load case governing the design and clearly show how the particular analysis, construction materials to be used, and the specific design meet the governing load combination.

Calculation sheets shall carry the names or initials of the engineer and the checker and the dates of calculations and checking. No portion of the calculations shall be computed and checked by the same person.

2.4.2 Computer Analysis

Provide a clear summary of all computer outputs and highlight in the outputs information used in the analysis and design accomplished elsewhere in the calculations.

If a computerized analysis or design program is used (either commercial software packages or unique, designer-written computer analysis/design tools), the computations shall provide clear reference to the software program and version being used and an explanation of the validity of the particular program to the given application (where has the program been used before, what input and output does the program provide, is the program a recognized Corps of Engineers or industry standard). If the program is proprietary to the Contractor (not recognized by the Corps of Engineers or industry), the Contractor shall provide a sample hand calculation to verify the results of one set of data generated by the computer program.

State exactly the computation performed by the computer. Include applicable diagrams, adequately identified. Provide all necessary explanations of the computer printout format, symbols, and abbreviations. Use adequate and consistent notation. Provide sufficient information to permit manual checks of the results.

Each set of computer printouts shall be preceded by an index and by a description of the computation performed. If several sets of computations are submitted, they shall be accompanied by a general table of contents in addition to the individual indices.

When the computer output is large, it shall be divided into volumes at logical division points. All final computer results used in design shall be separated from the total pages of computer output that might be included in the design calculations for ease of review.

2.5 SPECIFICATIONS

Specifications shall be prepared in accordance with the Construction Specifications Institute (CSI) format. The Contractor-prepared specifications shall include as a minimum, all applicable specification sections referenced by the CSI. Where the CSI does not reference a specification section for specific work to be performed by this contract, the Design-Build Contractor shall be responsible for creating the required specification.

2.5.1 Use of Unified Facilities Guide Specifications (UFGS)

UFGS (Uniform Federal Guide Specifications) are required for this project. Current UFGS information may be obtained at the following location: http://www.wbdg.org/ccb/browse_org.php?o=70.

Specifications for UFGS are in SpecsIntact format. SpecsIntact is government sponsored software used to edit specifications for government contracts. The software is available at the following link: http://specsintact.ksc.nasa.gov/index.asp.

2.5.2 Quality Control and Testing

Specifications shall include required quality control and further indicate all testing to be conducted by the Contractor, its subcontractors, vendors and/or suppliers.

2.5.3 Ambiguities and indefinite specifications

Ambiguities, indefinite specification requirements (e.g., highest quality, workmanlike manner, as necessary, where appropriate, as directed etc) and language open to interpretation is unacceptable.

2.5.4 Industry Standards

2.5.4.1 U.S. Industry Standards

The Specifications shall be based on internationally accepted U.S. industry Standards. Customarily accepted publications may be found in the UNIFIED MASTER REFERENCE LIST (UMRL) which may be located at the following URL: http://www.hnd.usace.army.mil/techinfo/UFGS/UFGSref.htm.

To access the UMRL select the “Unified Facilities Guide Specifications” tab and scroll down to Unified Master Reference List (UMRL) (PDF version).

Examples of U.S. standards are: National Fire Protection Association (NFPA), International Building Code (IBC), American Concrete Institute (ACI), American Water Works Association (AWWA), ADAAG (ADA Accessibility Guidelines) for Buildings and Facilities, etc. Standards referenced shall be by specific issue; the revision letter, date or other specific identification shall be included.

This document lists publications referenced in the Unified Facilities Guide Specifications (UFGS) of the Corps of Engineers (USACE), the Naval Facilities Engineering Command (NAVFAC), the Air Force Civil Engineer Support Agency (AFCESA), and the guide specifications of the National Aeronautics and Space Administration (NASA). This document is maintained by the National Institute of Building Sciences (NIBS) based on information provided by the agencies involved and the standards producing organizations. The listing is current with information available to NIBS on the date of this publication.

Standards referenced in specifications and drawings prepared by the Contractor shall be by specific issue; the revision letter, date or other specific identification shall be included.

2.5.4.2 Non U.S. Industry Standards

If non-U.S. industry standards (e.g., codes, regulations, or technical references and norms) are authorized for use under this contract and are incorporated in the Contractor's design, one (1) copy of each standard referenced shall be provided to the Government.

Where a U.S. design and/or construction standard cannot be referenced due to non-availability of products and/or systems, another specification format using the CSI guidelines may be utilized for that particular product and/or system. If a majority of the specifications within this project reference non-U.S. products due to availability and/or other factors, the entire set of specifications are not required to be in UFGS and SpecsIntact format.

2.6 DRAWINGS

2.6.1 Computer Assisted Design and Drafting (CADD)

Computer Assisted Design and Drafting (CADD) is required for all work related to this contract. Only personnel proficient in the preparation of CADD drawings shall be employed to modify the contract drawings or prepare new drawings. The CADD deliverables shall meet the requirements of the A/E/C CADD Standard (Release 3.0). Emphasis is on drawings meeting sheet layout standards, level/layer naming standards and sheet naming conventions. The CADD standards may be

downloaded at the CAD/BIM Technology Center at the following link: https://cadbim.usace.army.mil/default.aspx?p=s&t=13&i=4.
The Contractor shall furnish all softcopy design submittals (and As-Builts) using software applications in either .dwg (AutoCAD, AutoDesk release 2005 or later) or in .dgn (MicroStation, Bentley Systems version 8.0 or later) format. In addition, the Contractor is required to submit the softcopy design submittals in .pdf (Adobe Acrobat) format. Drawings prepared in any convention other than CADD, must have the written approval of the Contracting Officer.

2.6.2 Drawings

Drawings shall be prepared in the English language with metric (SI) units of measure. All the drawings and details of the working drawings shall be adequately labeled and cross-referenced. Complete, thoroughly checked, and coordination with other engineering disciplines design drawings shall be submitted. At the final design submittal (100%) the Contractor shall have incorporated all design review comments generated by previous design review(s), have completed all of the constructability and coordination comments, and have the drawings in a Ready-to-Build condition. The drawings shall be complete at this time and contain all the details necessary to ensure a clear understanding of the work throughout construction.

2.6.3 Drawing Size Border Sheets

All drawings shall be prepared in size "A1" border sheets (594mm by 841mm). Hardcopy design submissions may be printed on half size drawing sheets (“A3”, 279 mm by 420 mm) for purposes of saving paper and for ease of review. If drawings are not readable in the half size reduction, the Contractor shall submit all drawings in A1 border sheets. All final contract drawing sets (As-Builts) shall be submitted on A1 border sheets. Drawing sheets shall be trimmed to specified size if necessary.

2.6.4 Sequence of Design Drawings

Referencing the A/E/C CADD Standard (pg. 13, Table 2-1 of the A/E/C CADD standards) the sequence of drawings shall follow the sequence as shown below:

Discipline

1. General
2. Hazardous Materials
3. Survey/Mapping
4. Geotechnical
5. Civil
6. Landscape
7. Structural
8. Architectural
9. Interiors

10. Equipment
11. Fire Protection
12. Plumbing
13. Process
14. Mechanical
15. Electrical
16. Telecommunications
17. Resource
18. Other Disciplines
19. Sub-Contractor/Shop Drawings
20. Operations

2.6.5 Drawing Folder Structure

CADD files shall be organized in a folder structure to what is described in Paragraph 2.6.4. For multi-building projects a folder of each building type shall be created and the applicable folders shown in each building type folder.

2.6.6 Drawing Sheet Assembly

CADD files shall be organized to what is described in “Option 2 – Use of Design Model Only” (page 10, Figure 2-3 of the A/E/C CADD Standard). This method will utilize one view and the use of “paper space” is not used. The border sheet shall be X-REF into each model file and scaled up to the applicable scale.

2.6.7 Model Files

Model files represent the building’s physical layout and components such as floor plans and elevations. Model files shall be drawn to full size (1:1) in the default view. Floor Plan Model files represent one floor. Model files shall have coordinates (x,y,z) of 0,0,0 in paper space on layout. The exception for model files with coordinates 0,0,0 shall be the civil site plan (see section 1.5.1.2 Georeferencing).

2.6.8 Border Sheet Files

Border sheet files are used to assemble model files for plotting and viewing purposes. Every border sheet file has a drawing area, title block, border and represents one plotted drawing.

2.6.9 Layer/Level names

Layer or level files names shall follow the guidelines of appendix A and B of the A/E/C CADD standards. For AutoCAD, .dwt (drawing template files) shall be used to import the proper layers that will be inclusive of the correct line type, color, and line thickness of the respective layer.

2.6.10 Drawing File Naming Convention

CADD files shall follow the naming convention as described in the A/E/C CADD Standards. For model files reference pg 12 - 16, figure 2-4, tables 2-1 and 2-2. for sheet files reference pg 18 – 22, figure 2-5, table 2-3.

2.6.11 Sheet Identification Block

The sheet identifier will follow the name of the border sheet file. This will consist of the discipline designator, the sheet type designator and the sheet sequence number as referenced in pg 23, figure 2-6 of the A/E/C CADD Standards.

2.6.12 Drawing Scales

The scales indicated on the following list shall, in general, be used for all drawings. The Contractor may, at its option, make exceptions to scales indicated, if approved in writing by the Contracting Officer.

TYPICAL DRAWING SCALES	
DRAWING TYPE	**METRIC**
SITE PLAN	1:200
	1:400
	1:500
	1:600
	1:700
	1:1000
	1:2000
	1:5000
	1:6000
	1:10000
	1:20000
FLOOR PLAN	1:50
	1:100
	1:200
ROOF PLAN	1:200
EXTERIOR ELEVATIONS	1:100
	1:200
INTERIOR ELEVATIONS	1:50
	1:100
CROSS SECTIONS	1:50
	1:100
	1:200
WALL SECTIONS	1:20
STAIR DETAILS	1:10
DETAILS	1:5

2.6.13 Symbols, Line styles, & Patterns

Approved symbols, line styles, and patterns shall be in accordance with AEC CAD Standard Release 3.0 or current version (see Appendix D of the A/E/C CADD Standards). The approved symbols, line styles, and patterns associated with AutoCAD software maybe downloaded in the following link: https://tsc.wes.army.mil/products/standards/aec/aecstdsym.asp

2.6.14 Plotter Prepared Original Drawings

Plotter prepared original drawings shall be prepared on 20 pound bond paper, unless otherwise approved and shall be plotted on the matte side. Raster plotters must provide a minimum resolution of 400 dpi while vector plotters shall provide a minimum resolution of 0.0010 inch with an accuracy of +0.1% of the move and a repeatability error of not more than 0.005 inch. Drawings produced from dot matrix plotters are not acceptable. Plots accompanied by the digital design file may be prepared on vellum: translucent bond is not acceptable. Line density shall be equivalent to that produced by black India ink: half tone plots are only acceptable where the half-tone color setting of RGB (red, green blue) settings equal a value of 153 (see pg. 27, Table 3-4 of the A/E/C CADD Standards). Drawings plotted in color is not acceptable. Manual changes to plotted originals are not acceptable.

2.6.15 Title and Revision Block

Title and revision block shall match examples shown in 1335a-Attachments-AED.pdf, Figures 1 through 4, furnished as an attachment to this RFP.

2.6.16 Legends

For each submittal, legends of symbols and lists of abbreviations shall be placed on the drawings. They shall include all of the symbols and abbreviations used in the drawing set, but shall exclude any symbols and abbreviations not used. Since many symbols are limited to certain design disciplines, there is a definite advantage to the use of separate legends on the initial sheet of each design discipline or in the Standard Details package for each discipline. If legends have not been shown by discipline, a legend shall be placed on the first drawing.

2.6.17 Location Grid

To facilitate the location of project elements and the coordination of the various disciplines' drawings, all plans shall indicate a column line or planning grid, and all floor plans (except structural plans) shall show room numbers.

2.6.18 Composite and Key Plans

If the plan of a large building or structure must be placed on two or more sheets in order to maintain proper scale, the total plan shall be placed on one sheet at a smaller scale. Appropriate key plans and match lines shall appear on segmented drawings. Key plans shall be used not only to relate large scale plans to total floor plans but also to relate individual buildings to complexes of buildings. Key plans shall be drawn in a convenient location and shall indicate the relative location of the represented plan area by crosshatching.

2.6.19 Specifications Placed on the Drawings

Details of standard products or items which are adequately covered by specifications shall not be included on the drawings.

2.6.20 Revisions

Drawing revisions shall be prepared only on the original CADD files. A revision area is required on all sheets.

2.6.21 Binding

All volumes of drawing prints shall be firmly bound and shall have covers of heavier bond than the drawing sheets. If posts are used to fasten sheets together, the drilled holes on the bond edges of the sheets shall be on 8-1/2-inch centers.

2.6.22 Government Provided files

At the Preconstruction meeting, the Contractor shall be provided a CD that shall contain the AED border sheet, the A/E/C CADD standards, and various other files related to the compliancy of CADD files to the A/E/C CADD standards.

PART 3 EXECUTION

3.1 GENERAL

3.1.1 Design Concept Coordination Meeting

Shortly after Notice To Proceed (NTP) the Government or contractor may suggest meeting(s) to review the Design Submittal process or discuss various aspects of the contract to enable prompt and efficient initiation of contract actions. Meeting(s) will be held to assure attention is focused on key project requirements (necessary contractor design and Government review that is required to provide Construction Clearance), to discuss features and items of work that need to be submitted early due to long lead time items, or discuss other concepts/ideas that will help accelerate the contract work. Other Design Coordination meetings may be requested throughout the contract period if Government review of various contractor Design Submittals indicate poor design and plan or specification quality in order to clearly

explain the changes and improvements required of the contractor, assure understanding of Government comments, code references and required investigations and calculations, to move forward with acceptable design and satisfactory plans and specifications.

3.1.2 Government Design Changes

Government design changes which do not increase construction costs shall be made at no charge to the Government. The Contracting Officer may request design submittals in addition to those listed when deemed necessary to adequately describe the work covered in the contract documents. Submittals shall be made in the respective number of copies and to the respective addresses set forth in the paragraph entitled SUBMITTAL PROCEDURE. Each submittal shall be complete and in sufficient detail to allow ready determination of compliance with contract requirements.

3.2 SUBMITTAL REGISTER

3.2.1 Design Submittals

The Contractor shall submit as part of his Project Schedule Design Submittal milestone dates. The Contractor shall post all actual dates of submittal actions (including clearance for construction) as they occur.

3.2.2 Construction Submittal Register (ENG Form 4288)

Attached to this section is ENG Form 4288 which the Contractor is responsible for developing for this contract. All Design and construction submittals shall be shown on this register. The submittal register shall be the controlling document and will be used to control all submittals throughout the life of the contract. The Contractor shall maintain and update the register on a monthly basis for the Contracting Officer's approval.

3.3 TRANSMITTAL FORM (ENG Form 4025)

The sample transmittal form (ENG Form 4025) attached to this section shall be used for submitting both design and construction submittals in accordance with the instructions on the reverse side of the form. These forms will be furnished to the Contractor. This form shall be properly completed by filling out all the heading blank spaces and identifying each item submitted. Special care will be exercised to ensure proper listing of the specification paragraph and/or sheet number of the contract drawings pertinent to the data submitted for each item.

3.4 PROGRESS SCHEDULE

The Contractor shall prepare and submit a design progress schedule to the Contracting Officer. The Critical Path Method (CPM) of network calculation shall be used to generate the Project Schedule. The progress schedule shall show, as a percentage of the total design price, the various items included in the contract and the order in which the Contractor proposes to carry on the work, with dates on which he will start the features of the work and the contemplated dates for completing same. Significant milestones such as review submittals shall be annotated. The Contractor shall assign sufficient technical, supervisory and administrative personnel to insure the prosecution of the work in accordance with the progress schedule. The Contractor shall correct the progress schedule at the end of each month and submit as required to the Contracting Officer. The approved Project Schedule shall be used to measure the progress of the work, to aid in evaluating time extensions, and to provide the basis of all progress payments.

3.5 SCHEDULING

3.5.1 Design Submittals

Adequate time (a minimum of fourteen (14) full calendar days exclusive of mailing time) shall be allowed for Government review and comment in DrChecks$_{SM}$. If the Contractor fails to submit design submittals in a timely fashion, or repetitively submits design submittals that are not in strict conformance with the Contract documents, no part of the time lost due to such actions shall be made the subject of claim for extension of time or for excess costs or damages by the Contractor.

3.5.2 Construction Submittals

Contractor furnished Government Approved Construction Submittals (GA) for items noted in Paragraph 1.2.4 of this Section, or others as required by the COR, shall be submitted to the Area or Resident Office, per directions given at the Pre-Construction meeting. Adequate time (a minimum of fourteen (14) full calendar days exclusive of mailing time) shall be allowed for AED review and comment.

3.5.3 Post Design Construction Submittals

Submittals covering component items forming a system or items that are interrelated shall be scheduled to be coordinated and submitted concurrently. Certifications to be submitted with the pertinent drawings shall be so scheduled. Adequate time (a minimum of fourteen (14) full calendar days exclusive of mailing time) shall be allowed for review and approval. If the Contractor fails to submit post design construction submittals in a timely fashion, or repetitively submits submittals that are not in strict conformance with the Contract documents, no part of the time lost due to actions shall be made the subject of claim for extension of time or for excess costs or damages by the Contractor.

3.6 SUBMITTAL PROCEDURE

3.6.1 Design Submittals

3.6.1.1 Afghanistan Engineer District (AED)

One (1) half-size hard copy and two (2) soft copies on CD-ROM (electronic version) of all design submittals (calculations, reports of field tests, design analysis, plans, specifications, etc) shall be transmitted to the Government at the following address, by means of ENG Form 4025:

AFGHANISTAN ENGINEER DISTRICT

(1) DHL, FEDEX, UPS or any other courier service:
U.S. Army Corps of Engineers
Afghanistan Engineer District
House # 1, St. #1 West
West Wazir Akbar High School
Behind Amani High School
Kabul, Afghanistan
Attention: Chief, Engineering Branch

The Contractor shall scan the soft copy (electronic version) of each Design Submittal using most up-to-date version of recognized Industry-standard anti-virus software (Symantec, Norton, etc.) to insure that no viruses are contained in it prior to acceptance by AED. The label shall indicate it has been scanned for viruses and the anti-virus software and version clearly indicated.

3.6.1.2 Resident/Area Engineer Office

Complete design submittals shall be provided to the Area and/or Resident Engineer Office such that these are received **at the same time** as the Contractor provides them to the address noted in Paragraph 3.6.1.1. At the Pre-Construction meeting, the Contractor will be furnished the Area and/or Resident Office addresses to which these submittals shall be provided and the specific number of hard copies (full and half sizes) and soft copies (CD-ROM) required by the Area and/or Resident Office as per Paragraph 3.6.1.1, soft copies are to be properly labeled and checked for viruses by the Contractor prior to delivery.

3.6.1.3 Editable CADD Format As-Builts

This is a Design-Build project and in accordance with Contract Clause 52.227-7022 GOVERNMENT RIGHTS (UNLIMITED), the Government has non-exclusive rights to use the design on other projects. Therefore, the As-Builts furnished to the Government must be in an editable format. See Section 01780A CLOSEOUT SUBMITTALS, Paragraphs 1.1 and 1.2, for all requirements associated with submission of editable CADD format As-Builts required as part of this contract.

3.6.2 Post Design Construction Submittals

One (1) copy of all post design construction submittals shall be transmitted to:

AFGHANISTAN ENGINEER DISTRICT

(1) DHL, FEDEX, UPS or any other courier service:
U.S. Army Corps of Engineers
Afghanistan Engineer District
House # 1, St. #1 West
West Wazir Akbar High School
Behind Amani High School
Kabul, Afghanistan
Attention: Chief, Engineering Branch

3.6.3 Submittal Numbering System

Instructions on the numbering system to be used for construction submittals follows.

3.6.3.1 Submittals

Shop drawings and materials are listed on the Submittal Register (ENG Form 4288) as follows:

a. List is prepared according to contract specifications and drawings, picking up all items involved in the project.

b. This list is divided into sections as indicated in the specifications. For example:

Section 01015 "Technical Requirements"
Section 01335 “Design Submittals”
Section 02831 "Chain-Link Fence"
Section 02710 "Subdrainage System"
Section 03300 "Concrete For Building Construction"
Section 04200 "Masonry"

3.6.3.2 Numbering procedures for transmittal on ENG FORM 4025

Each Specification Section will have various requirements for submittals (design information, product data, test reports, procedures, etc.) to the Government for Approval (GA) or For Information Only (FIO). Items from different Sections cannot be submitted on the same ENG Form 4025. When furnishing one or more items from the same Section at a given time, a single ENG Form 4025 can be used to identify and submit these items. Block ‘b” of the 4025 entitled “DESCRIPTION OF ITEM SUBMITTED” should provide an accurate and unique description of each item

being proposed by the Contractor. Item numbers (block “a” of the 4025 entitled “ITEM NO.”) will be automatically generated in QCS for each ENG Form 4025. QCS will track and automatically generate the “ITEM NO.” for all following ENG Form 4025s for the same Section number. To illustrate, a transmittal for the 35% Design Submittal required by Section 01335 might have the following Items:

ITEM NO. 1 Topographic Information
ITEM NO. 2 Geotechnical Report
ITEM NO. 3 Foundation Design
ITEM NO. 4 35% Plans
ITEM NO. 5 Outline of Construction Specifications to be used

If this was the first submittal furnished by the Contractor for Section 01335, then a Transmittal Number of 01335-1 would be generated using QCS. As new transmittals are generated in QCS, the last digit of the transmittal is increased incrementally, as follows:

Transmittal No. 01335-2
Transmittal No. 01335-3
Transmittal No. 01335-4

and so forth. The first transmittal submitted from each Specification Section will be “-1”, in other words, there will never be a “Transmittal No. 01335-0”.

The above illustration is true for all other Specification Sections included in the Request for Proposal or in the Construction Specifications compiled by the Contractor in the prosecution of work under the RFP.

3.6.3.3 Resubmittals

Should the Contractor be required to resubmit any transmittal due to one or more items on that transmittal being Coded “C” (Cleared for Construction, except as noted in attached comments, Resubmission Required) or “E” (NOT Cleared for Construction, see attached comments, Resubmission Required) by the Government, QCS will be used to generate the same transmittal number followed by the number "-1" for the first resubmittal, "-2" for the second resubmittal, "-3" for the third resubmittal, etc.

As an example, assume the 65% Design Submittal is provided to the Government as Transmittal 01335-9. Due to omissions or errors in that Submittal which result in a Code “E” being given, then the subsequent 65% Design Resubmittal #1 would be “Transmittal 01335-9.1”. Should a resubmittal again be necessary, it would be Design Resubmittal #2 and would be submitted as “Transmittal 01335-9.2”.

The purpose of this system is to avoid deviations from the Submittal Register and to track submittals in both RMS and DrChecks$_{SM}$. It should be noted that a new transmittal number following the above system CANNOT be generated in QCS unless the prior transmittal has been given a Code If the Contractor is having difficulty generating the correct transmittal number, contact the COR to resolve the matter.

The Contractor use the above nomenclature and date of submission to the Government for Plan Cover Sheets; title blocks for all drawings; all Specification Cover Sheets; all specification pages; all Design Analysis Cover Sheets and associated pages; and similar labeling for all other documents included in the submittal.

See the attachment titled “1335a-Attachments-AED.pdf” (Figures 1-4) for required Title Block Required Annotations drawing guidance.

3.6.4 Variations

If Design or construction submittals show variations from the contract parameters and/or requirements, the Contractor shall justify such variations in writing, at the time of submission. Additionally, the Contractor shall also annotate block "h" entitled "variation" of ENG FORM 4025. After design submittals have been reviewed and cleared for construction by the Contracting Officer, no resubmittal for the purpose of substituting materials, equipment, systems, and patented processes will be considered unless accompanied by the following:

a. Reason or purpose for proposed variation, substitution, or revision.

b. How does quality of variation compare with quality of the specified item? This shall be in the form of a technical evaluation tabulating differences between the item(s) originally specified and what is proposed.

c. Provide a cost comparison. This shall include an acquisition and life cycle cost comparison.

d. For proprietary materials, products, systems, and patented processes a certification signed by an official authorized to certify in behalf of the manufacturing company that the proposed substitution meets or exceeds what was originally specified.

e. For all other actions, a certification signed by a licensed professional engineer or architect certifying that the proposed variation or revision meets or exceeds what was originally specified.

f. Advantage to the Government, if variation is approved, i.e. Operation and Maintenance considerations, better product, etc.

g. Ramifications and impact, if not approved.

If the Government review detects any items not in compliance with contract requirements or items requiring further clarification, the Contractor will be so advised. Lack of notification by the Contracting Officer of any non-complying item does not relieve the Contractor of any contractual obligation.

3.6.5 Non-Compliance

The Contracting Officer will notify the Contractor of any detected noncompliance with the requirements of this specification. The Contractor shall take immediate corrective action after receipt of such notice. Such notice, when delivered to the Contractor at the worksite, shall be deemed sufficient for the purpose of notification. If the Contractor fails or refuses to comply promptly, the Contracting Officer may issue an order stopping all or part of the work until satisfactory corrective action has been taken. No part of the time lost due to such stop orders shall be made the subject of claim for extension of time or for excess costs or damages by the Contractor.

3.7 REVIEW OF CONTRACTOR PREPARED DESIGN DOCUMENTS

3.7.1 General

The work under contract will be subject to continuous review by representatives of the Contracting Officer. Additionally, joint design review conferences with representation by all organizations having a direct interest in the items under review may be held. The Contractor shall furnish copies of all drawings and related documents to be reviewed at the review conference on or before the date indicated by the Government. Additional conferences pertaining to specific problems may be requested by the Contractor or may be directed by the Contracting Officer as necessary to progress the work. The Contractor shall prepare minutes of all conferences and shall furnish two copies to the Contracting Officer within seven (7) days after the conference.

3.7.2 Independent Design Review

The Contractor shall have someone other than the Designer or Design Team perform an Independent Technical Review of all specifications, drawings, design analysis, calculations, and other required data prior to submission to the Government. This review shall insure the professional quality, technical accuracy, and the coordination of all design analysis, drawings and specifications, and other services furnished under this contract have been accomplished. Work must be organized in a manner that will assure thorough coordination between various details on drawings, between the various sections of the specifications, and between the drawings and specifications. The Contractor shall thoroughly cross-check and

coordinate all work until he is professionally satisfied that no conflicts exist, vital information has not been omitted, and that indefinite language open to interpretation has been resolved. Upon completion of this review, the Contractor shall certify that each design submittal is complete, accurate, is in strict conformance with all contract requirements, that repetition has been avoided, that all conflicts have been resolved, and that the documents have thoroughly coordinated and cross checked against all the applicable disciplines to prevent the omission of vital information.

3.7.3 Contractor's Quality Control Organization Review

The Contractor shall thoroughly review each submittal prior to submission to the Contracting Officer to assure it is complete, correct and unified. This review shall be for the purposes of eliminating errors, interferences, and inconsistencies, and of incorporating design criteria, review comments, specifications, and any additional information required. The Contractor will give evidence of such review of all items in each submittal ENG Form 4025, by annotating Column “g” (titled “For Contractor Use Code”) of this Form with the letter “A,” meaning the Contractor has reviewed it and is indicating it is “Approved as Submitted”. Design submittals submitted to the Contracting Officer without evidence of the above requirements or the Contractor's certified approval will be returned for resubmission. No part of the time lost due to such resubmissions shall be made the subject of claim for extension of time or for excess costs or damages by the Contractor.

3.7.4 Government Review

a. Within 14 days after Notice to Proceed, the Contractor shall submit, for approval, a complete design schedule with all submittals and review times indicated in calendar dates. The Contractor shall update this schedule monthly. After receipt, the Government will be allowed fourteen (14) full days to review and comment on all Design Submittals, except as noted below. This time period starts on the next full day after delivery of the Design Submittal to the Government.

b. If a design submittal is deficient (errors on ENG Form 4025, incorrect drawing title block information, missing or incomplete features required in the Submittal, etc.), it will be returned immediately without further review for correction and resubmission. The review time will begin when the corrected submittal is received. The Contractor may be liable for liquidated damages owed to the Government for returned design submittals due to deficiencies.

c. The contractor shall not begin construction work until the Government has reviewed the Contractor's Design Submittal and cleared it for construction. Clearance for construction does not mean Government approval. Government review shall not be construed as a complete check but will evaluate the general design approach and adherence to contract parameters. The Government Review is often limited in time and scope. Therefore, the Contractor shall not

consider any review performed by the Government as an excuse for incomplete work.

d. Upon completion of the review the Contractor will be notified by the Contracting Officer Representative that the DrChecks$_{SM}$ file is open for viewing and response to AED comments. The Contracting Officer will indicate whether the Design Submittal, or portions thereof, has or has not been cleared for construction using the following action codes:

A – Cleared for Construction

B – Cleared for Construction, except as noted in attached comments

C – Cleared for Construction, except as noted in attached comments, Re-submission required

E - NOT Cleared for Construction, see attached comments, Re-submission required

FX – Receipt acknowledged, does not comply as noted with contract requirements.

These codes shall NOT be used by the Contractor.

Design submittals Cleared for Construction by the Contracting Officer shall not relieve the Contractor from responsibility for any design errors or omissions and any liability associated with such errors, nor from responsibility for complying with the requirements of this contract.

3.7.4.1 Incorporation of Government Review Comments

a. The Contractor shall review each comment, furnish a complete response in DrChecks$_{SM}$ as to how the comment will be addressed in the Design Analysis, Plans and Specifications, or other Design Submittal stipulations required in this Contract. The Contractor will then incorporate each comment into the design submittal along with other work required at the next Design Submittal stage. The Contractor shall furnish disposition of all comments in DrChecks$_{SM}$, with the next scheduled submittal. The disposition shall identify action taken with citation of location within the relevant design document. Generalized statements of intention such as "will comply" or "will revise the specification" are not acceptable. During the design review process, comments will be made on the design submittals that will change the drawings and specifications. The Government will make no additional payments to the Contractor for the incorporation of comments. Review comments are considered part of the contract administration process.

b. If the Contractor disagrees technically with any comment or comments and does not intend to comply with the comment, he must clearly outline, with ample justification, the reasons for noncompliance within five (5) days after close of review period in order that the comment can be resolved.

c. The Contractor is cautioned that if he believes the action required by any comment exceeds the requirements of this contract, he should flag the comment in DrChecks$_{SM}$ as a scope change, and notify the COR in writing immediately.

d. If a design submittal is over one (1) day late in accordance with the latest design schedule, the Government review period may be extended 7 days. Submittal date revisions must be made in writing at least five (5) days prior to the submittal.

3.7.4.2 Conferences

As necessary, conferences will be conducted between the Contractor and the Government to resolve review comments.

A review conference may be held at the completion of AED review and subsequent Contractor response for each design submittal. The review conference will be held at the Corps District Office in Kabul, Afghanistan. The Contractor shall bring the personnel that developed the Design submittal to the review conference.

3.7.4.3 Design Deficiencies

Design deficiencies noted by the Government shall be corrected prior to the start of design for subsequent features of work which may be affected by, or need to be built upon, the deficient design work.

3.7.5 Design Discrepancies

The Contractor shall be responsible for the correction of incomplete design data, omissions, and design discrepancies which become apparent during construction. The Contractor shall provide the Contracting Officer with a proposed recommendation for correcting a design error, within three (3) calendar days after notification by the Contracting Officer. The Contracting Officer will notify the Contractor of any detected noncompliance with the foregoing requirements. The Contractor shall take immediate corrective action after receipt of such notice. Such notice, when delivered to the Contractor at the worksite, shall be deemed sufficient for the purpose of notification. If the Contractor fails or refuses to comply promptly, the Contracting Officer may issue an order stopping all or part of the work until satisfactory corrective action has been taken. No part of the time lost due to such stop orders shall be made the subject of claim for extension of time or for excess costs or damages by the Contractor. Should extensions of design, fabrication plans and/or specific manufacturer's details be required as a result of a Government

issued Change Order, the Government will make an equitable adjustment in accordance with Contract Clause 52.243-4 entitled CHANGES.

3.8 Phased or "Fast-Track" Design

3.8.1 General

If approved by the Government, design and construction sequencing may be effected on an incremental basis as each approved phase or portion (e.g., demolition, geotechnical, site work, exterior utilities, foundations, substructure, superstructure, exterior closure, roofing, interior construction, mechanical, electrical, etc.) of the design is completed.

3.8.2 Design Phases

Complete or partial design phasing may or may not have been specified by the Government elsewhere in this contract. For construction sequencing or phasing that the Government has not specifically mandated, the Design-Build Contractor may submit a proposed phasing plan. Design phasing proposed by the Design-Build Contractor shall be submitted to the Government for approval.

3.8.3 Sequence of Design-Construction (Fast-Track)

After receipt of the Contract Notice to Proceed (NTP) the Contractor shall initiate design, comply with all design submission requirements and obtain Government review of each submission. The contractor may begin construction on portions of the work for which the Government has reviewed the final design submission and has determined satisfactory for purposes of beginning construction. The Contracting Officer will notify the Contractor when the design is cleared for construction. The Government will not grant any time extension for any design resubmittal required when, in the opinion of the Government, the initial submission failed to meet the minimum quality requirements as set forth in the contract.

3.8.4 Notice-to-Proceed for Limited Construction

If the Government allows the Contractor to proceed with limited construction based on pending minor revisions to the reviewed Final Design submission, no payment will be made for any in-place construction related to the pending revisions until they are completed, resubmitted and are satisfactory to the Government.

3.8.5 In-Place Construction Payment

No payment will be made for any in-place construction until all required submittals have been made, reviewed and are satisfactory to the Government.

3.8.6 Commencement of Construction

Construction of work may begin after receipt of the clearance for construction (Notice to Proceed) for each design phase. Any work performed by the Contractor prior to receipt of the clearance for construction, shall be at the Contractor's own risk and expense. Work cleared for construction that does not conform to the design parameters and/or requirements of this contract shall be corrected by the Contractor at no additional cost or time to the Government.

3.9 Conduct of Work

3.9.1 Performance

Perform the work diligently and aggressively, and promptly advise the Contracting Officer of all significant developments.

3.9.2 Telephone Conversations

Prepare a summary, and promptly furnish a copy thereof to the Contracting Officer, of all telephone conversations relating to the design work under this contract.

3.9.3 Cooperation with Others

Cooperate fully with other firms, consultants and contractors performing work under the program to which this contract pertains, upon being advised by the Contracting Officer that such firms or individuals have a legitimate interest in the program, have need-to-know status, and proper security clearance where required.

3.9.4 Technical Criteria

All designs, drawings, and specifications shall be prepared in accordance with the contract documents and with the applicable publications referenced therein. As soon as possible, the Contractor shall obtain copies of all publications applicable to this contract. Availability of publications (where to purchase) is contained in Specification Section 01420 entitled: SOURCES FOR REFERENCE PUBLICATIONS. Any deviations from the technical criteria contained in the contract documents or in the applicable publications, including the use of criteria obtained from the user or other sources, must receive prior approval of the Contracting Officer. Where the technical criteria contained or referred to herein are not met, the Contractor will be required to conform his design to the same at his own time and expense.

3.9.5 Conflicts

Any conflicts, ambiguities, questions or problems encountered by the Contractor in following the criteria shall be immediately submitted in writing to the Contracting Officer with the Contractor's recommendations. Prior to submission to the

Government the Contractor shall take appropriate measures to obtain clarification of design criteria requirements, to acquire all pertinent design information, and to incorporate such information in the work being performed.

3.9.6 Design Priorities

The design of this project shall consider the remote location and harsh environment of this project and the impact this will have on sources of technical supply, the cost of construction, the low level of maintenance, and the difficulty of obtaining replacement parts. Unless stated otherwise in this contract, the following design priorities shall be followed.

3.9.6.1 Construction Life Span Levels

Permanent Construction. Buildings and facilities shall be designed and constructed to serve a life expectancy of more than 25 years, to be energy efficient, and to have finishes, materials, and systems that are low maintenance and low life-cycle cost.

3.9.6.2 Operability

Systems including but not necessarily limited to mechanical, electrical, communications, etc., must be simple to operate and easy to maintain.

3.9.6.3 Standardization

Use of standardized materials, products, equipment, and systems is necessary to minimize the requirements for replacement parts, storage facilities, and service requirements.

3.9.6.4 Topographic Surveys, Easements, and Utilities

Unless otherwise stated in the contract, the Contractor will be responsible for detailed topographic mapping, available easements, and utility information for the project.

3.9.6.5 Horizontal and Vertical Control

The mapping shall be based on the base coordinate system. If the base system cannot be found, the surveyor shall use any established monuments. If monuments have been destroyed or do not exist, an assumed horizontal and vertical datum shall be established, using arbitrary coordinates of 10,000n and 10,000e and an elevation of 1,000 meters. The horizontal and vertical control established on site shall be a closed loop with third order accuracy and procedures. Provide three (3) concrete survey monuments at the survey site. All of the control points established at the site shall be plotted at the appropriate coordinate point and shall be identified by name or number, and adjusted elevations. The location of the project site, as determined by

the surveyor shall be submitted in writing to the Contracting Officer. The site location shall be identified by temporary markers, approved by the Contracting Officer before proceeding with the surveying work.

3.9.6.6 Topography Requirements

A sufficient quantity of horizontal and vertical control shall be established to provide a detailed topographic survey at 1:500 scale with one quarter meter contour intervals minimum. Intermediate elevations shall be provided as necessary to show breaks in grade and changes in terrain.

The contours shall accurately express the relief detail and topographic shapes. In addition, 90 percent of the elevations or profiles interpolated from the contours shall be correct to within one-half of the contour interval and spot elevations shall be correct within plus or minus 20 millimeters.

Spot elevations affecting design of facilities shall be provided. Specifically, break points or control points in grades of terrain such as tops of hills, bottoms of ditches and gullies, high bank elevations, etc.

All surface and sub-surface structures features within the area to be surveyed shall be shown and identified on the topographic maps. In addition, these features shall be located by sufficient distance ties and labeled on the topographic sheets to permit accurate scaling and identification.

The location and sizes of potable, sanitary, electrical and mechanical utilities within the survey site shall be shown on the survey map. Sanitary manholes and appurtenances shall show top elevations and invert elevations.

3.9.6.7 Geotechnical Investigation

Unless otherwise stated in the contract, the Contractor will be responsible for Geotechnical investigation, including subsurface explorations, sampling, field and laboratory testing, and water studies where applicable.

3.9.6.8 Cathodic Protection and Earth Resistance

Unless otherwise stated in the contract, the Contractor will be responsible for determining whether cathodic protection on buried structures and underground utility systems are needed for special electrical grounding and counterpoise systems, and for gathering the field data necessary for design.

3.9.6.9 Water Supply and Quality Data

Unless otherwise stated in the contract, the Contractor will be responsible for obtaining all water supply and water quality data. This data will include information

on the locations and depths of all viable water supply sources at the site(s) involved and a water quantity and water quality analysis for each source.

3.9.6.10 Occupational Safety and Health Act

The facilities, systems, and equipment designed under this contract shall comply with the Occupational Safety and Health Act (OSHA), Code of Federal Regulations, Title 29, Chapter XVII, Parts 1910 and 1926. Any problems in incorporating these standards due to conflicts with other technical criteria shall be submitted to the Contracting Officer for resolution.

3.9.6.11 Asbestos Containing Materials

Asbestos containing material (ACM) will not be used in the design of new structures or systems. In the event no other material is available which will perform the required function or where the use of other material would be cost prohibitive, a waiver for the use of asbestos containing materials must be obtained from AED.

3.9.6.12 Existing Construction

Asbestos containing materials (ACM) presently included in existing construction to be rehabilitated or otherwise modified as a result of this project shall be removed and a non-asbestos containing material substituted in lieu thereof.

3.9.6.13 Suspected Asbestos Containing Materials

All such structures and systems shall be inspected to determine the presence or probable presence of ACM. When ACM is suspected, a documented survey will be performed. The survey will be developed into an abatement design and will be made a part of the design documents. In the event no other material is available which will perform the required function or the use of a substitute material would be cost prohibitive due to initial cost and tear-out of existing construction, a waiver for the retention of the asbestos containing material must be obtained from the Contracting Officer.

3.10 VALUE METHODOLOGY/VALUE ENGINEERING

The Contractor during the course of his design shall be alert for and shall identify those high-cost low-value items or areas which he considers may be accomplished in different ways that will increase the value of the project at the same or less cost. Potential value engineering study items shall be reported to the Value Engineer through the Contracting Officer.

3.10.1 Performance Oriented Value Engineering Change Proposal (VECP)

In reference to Contract Clause 52.248-3, "Value Engineering - Construction", the Government may refuse to entertain a "Value Engineering Change Proposal" (VECP) for those "performance oriented" aspects of the Contract Documents which were addressed in the Contractor's accepted contract proposal and which were evaluated in competition with other Proposers for award of this contract. For purposes of this clause, the term "performance oriented" refers to those aspects of the design criteria or other contract requirements which allow the Proposer or the Contractor certain latitude, choice of and flexibility to propose in its accepted contract offer a choice of design, technical approach, design solution, construction approach or other approach to fulfill the contract requirements. Such requirements generally tend to be expressed in terms of functions to be performed, performance required or essential physical characteristics, without dictating a specific process or specific design solution for achieving the desired result.

3.10.2 Prescriptive Oriented Value Engineering Change Proposal (VECP)

The Government may consider a VECP for those "prescriptive" aspects of the Solicitation documents, not addressed in the Contractor's accepted contract proposal or addressed but evaluated only for minimum conformance with the Solicitation requirements. For purposes of this clause, the term "prescriptive" refers to those aspects of the design criteria or other Solicitation requirements wherein the Government expressed the design solution or other requirements in terms of specific materials, approaches, systems and/or processes to be used. Prescriptive aspects typically allow the Proposers little or no freedom in the choice of design approach, materials, fabrication techniques, methods of installation or other approach to fulfill the contract requirements.

3.11 ATTACHMENTS

The following attachments form an integral part of this specification:

ENG FORM 4025R, Mar 95 - Transmittal of Shop Drawings, Equipment Data, Material Samples, or Manufacturer's Certificate of Compliance (2 pages)

ENG FORM 4288-R. Mar 95 - Submittal Register

Figure 1 – AED Title Block

Figure 2 - AED Management Block

Figure 3 - AED Issue Block & Required Notations

Figure 4 - Border Sheet Size

-- End of Section -

TRANSMITTAL OF SHOP DRAWINGS, EQUIPMENT DATA, MATERIAL SAMPLES, OR MANUFACTURER'S CERTIFICATES OF COMPLIANCE *(Read instructions on the reverse side prior to initiating this form)*	DATE	TRANSMITTAL NO.

SECTION I - REQUEST FOR APPROVAL OF THE FOLLOWING ITEMS *(This section will be initiated by the contractor)*

TO:	FROM:	CONTRACT NO.	CHECK ONE: ☐ THIS IS A NEW TRANSMITTAL ☐ THIS IS A RESUBMITTAL OF TRANSMITTAL _____
SPECIFICATION SEC. NO. *(Cover only one section with each transmittal)*	PROJECT TITLE AND LOCATION		CHECK ONE: THIS TRANSMITTAL IS FOR ☐ FIO ☐ GOV'T. APPROVAL

ITEM NO. *a.*	DESCRIPTION OF ITEM SUBMITTED *(Type size, model number/etc.)* *b.*	MFG OR CONTR. CAT., CURVE DRAWING OR BROCHURE NO. *(See instruction no. 8)* *c.*	NO. OF COPIES *d.*	CONTRACT REFERENCE DOCUMENT		FOR CONTRACTOR USE CODE *g.*	VARIATION *(See instruction No. 6)* *h.*	FOR CE USE CODE *i.*
				SPEC. PARA. NO. *e.*	DRAWING SHEET NO. *f.*			

REMARKS	I certify that the above submitted items have been reviewed in detail and are correct and in strict conformance with the contract drawings and specifications except as other wise stated. _____ NAME AND SIGNATURE OF CONTRACTOR

SECTION II - APPROVAL ACTION

ENCLOSURES RETURNED *(List by Item No.)*	NAME, TITLE AND SIGNATURE OF APPROVING AUTHORITY	DATE

INSTRUCTIONS

1. Section I will be initiated by the Contractor in the required number of copies.

2. Each transmittal shall be numbered consecutively in the space provided for "Transmittal No.". This number, in addition to the contract number, will form a serial number for identifying each submittal. For new submittals or resubmittals mark the appropriate box; on resubmittals, insert transmittal number of last submission as well as the new submittal number.

3. The "Item No." will be the same "Item No." as indicated on ENG FORM 4288-R for each entry on this form.

4. Submittals requiring expeditious handling will be submitted on a separate form.

5. Separate transmittal form will be used for submittals under separate sections of the specifications.

6. A check shall be placed in the "Variation" column when a submittal is not in accordance with the plans and specifications--also, a written statement to that effect shall be included in the space provided for "Remarks".

7. Form is self-transmittal, letter of transmittal is not required.

8. When a sample of material or Manufacturer's Certificate of Compliance is transmitted, indicate "Sample" or "Certificate" in column c, Section I.

9. U.S. Army Corps of Engineers approving authority will assign action codes as indicated below in space provided in Section I, column i to each item submitted. In addition they will ensure enclosures are indicated and attached to the form prior to return to the contractor. The Contractor will assign action codes as indicated below in Section I, column g, to each item submitted.

THE FOLLOWING ACTION CODES ARE GIVEN TO ITEMS SUBMITTED

A	--	Approved as submitted.	E	--	Disapproved (See attached).
B	--	Approved, except as noted on drawings.	F	--	Receipt acknowledged.
C	--	Approved, except as noted on drawings. Refer to attached sheet resubmission required.	FX	--	Receipt acknowledged, does not comply as noted with contract requirements.
D	--	Will be returned by separate correspondence.	G	--	Other *(Specify)*

10. Approval of items does not relieve the contractor from complying with all the requirements of the contract plans and specifications.

(Reverse of ENG Form 4025-R)

SUBMITTAL REGISTER

(ER 415 1-10)

CONTRACT NO.

TITLE AND LOCATION

CONTRACTOR

SPECIFICATION SECTION

ACTIVITY NO a.	TRANS-MITTAL NO. b.	ITEM NO c.	SPECIFICATION PARAGRAPH NUMBER d.	DESCRIPTION OF ITEM SUBMITTED e.	TYPE OF SUBMITTAL: DATA f.	DRAWINGS g.	INSTRUCTIONS h.	SCHEDULES i.	STATEMENTS j.	REPORTS k.	CERTIFICATES l.	SAMPLES m.	RECORDS n.	CLASSIFICATION: INFORMATION ONLY o.	GOVERNMENT APPROVED p.	REVIEWER q.	CONTRACTOR SCHEDULE DATES: SUBMIT r.	APPROVAL NEEDED BY s.	MATERIAL NEEDED BY t.	CONTRACTOR ACTION: CODE u.	DATE v.	SUBMIT TO GOVERN-MENT w.	GOVERNMENT ACTION: CODE x.	DATE y.	REMARKS z.

ENG FORM 4288-R, MAR 95 EDITION OF SEP 93 IS OBSOLETE. PAGE 1 OF ____ PAGES (Proponent: CEMP-CE)

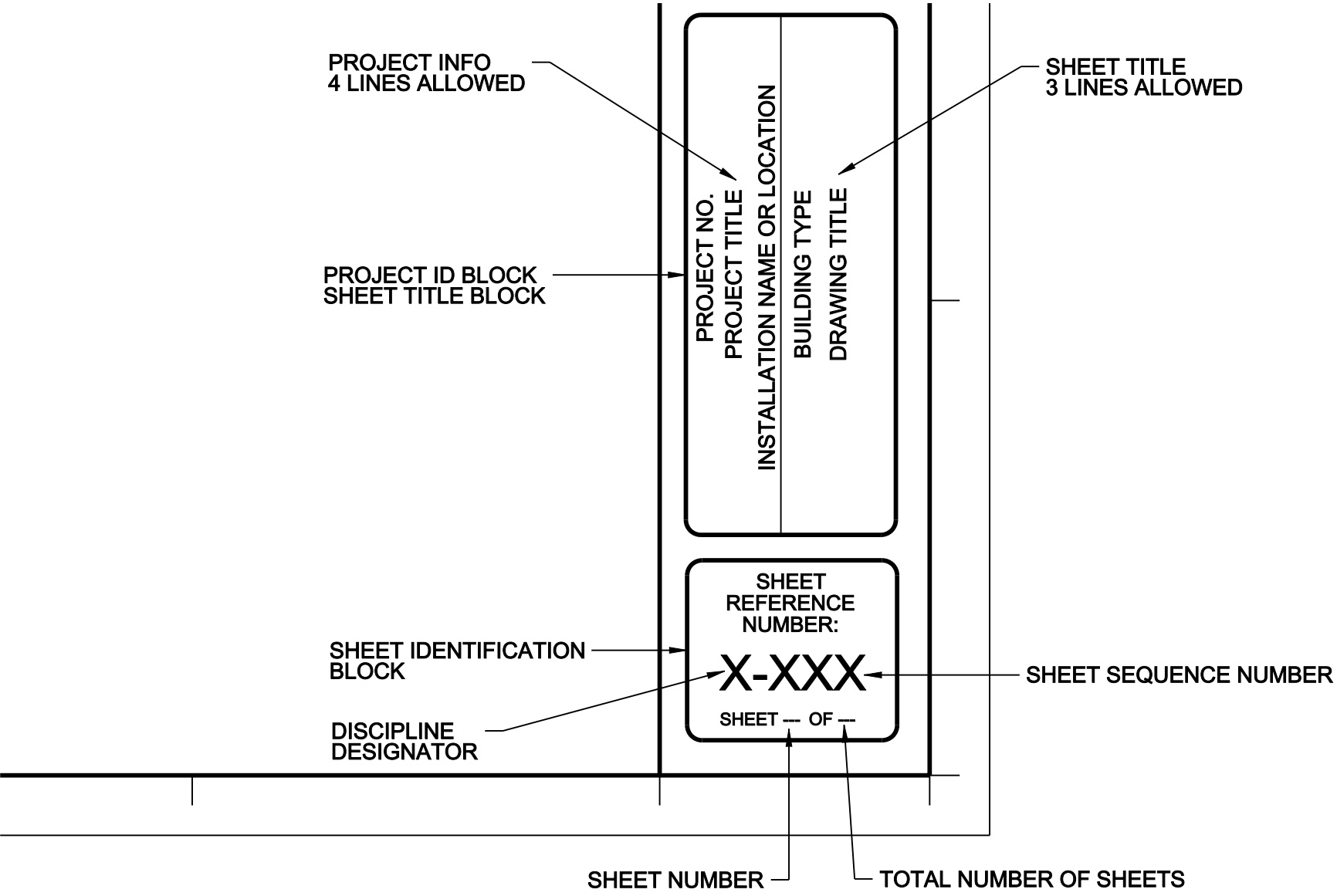

FIGURE 1 - AED TITLE BLOCK

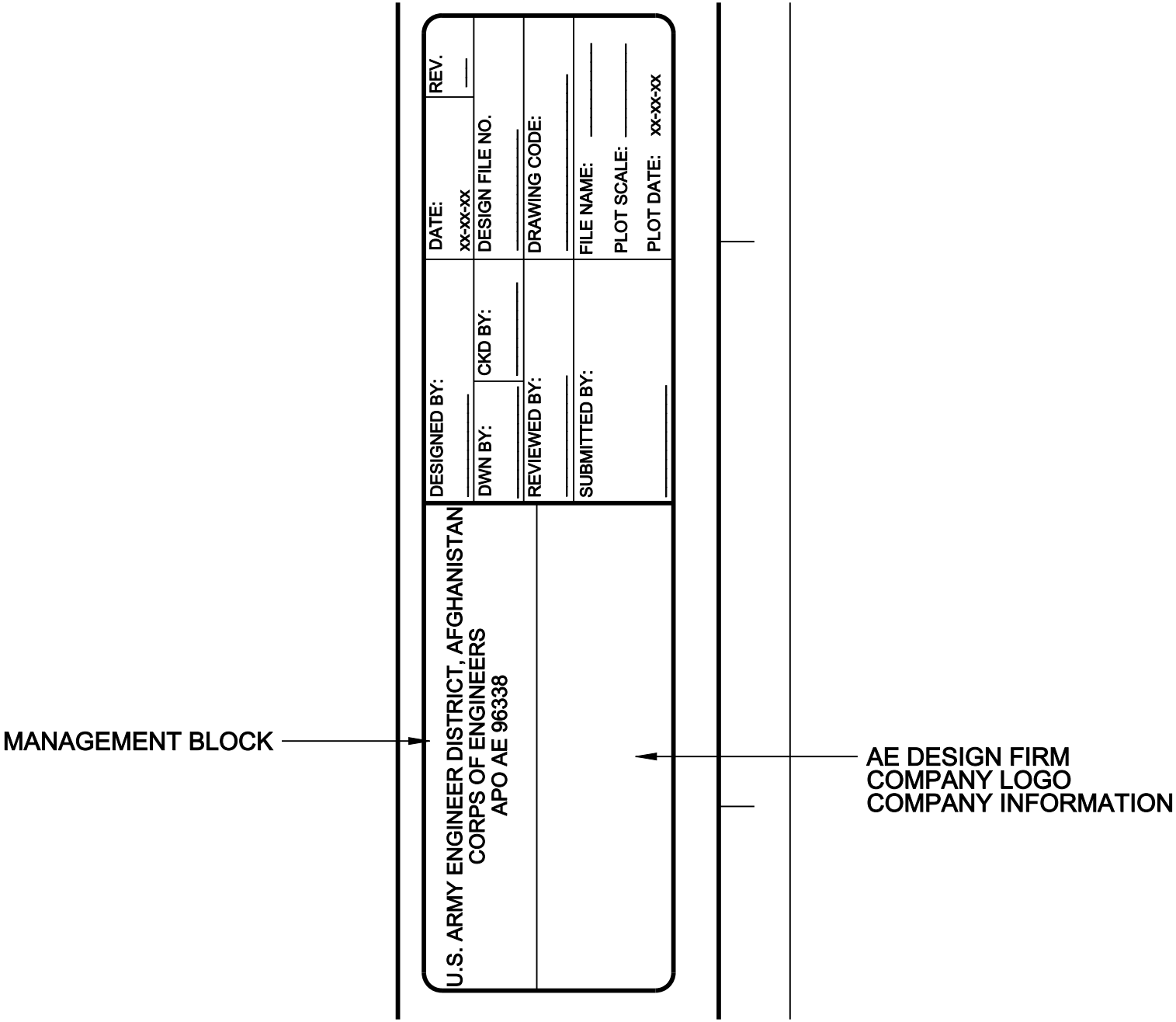

FIGURE 2 - AED MANAGEMENT BLOCK

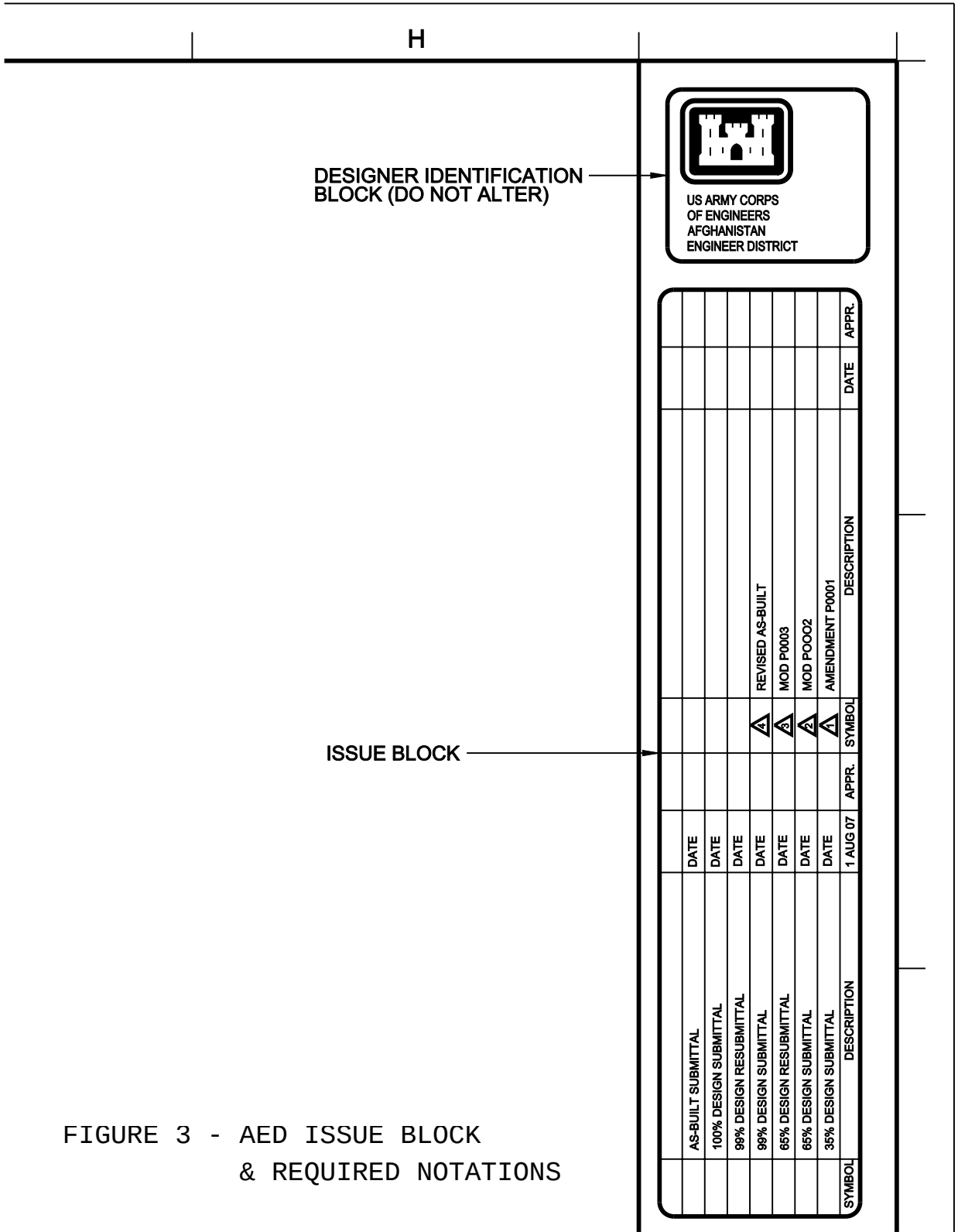

FIGURE 3 - AED ISSUE BLOCK
& REQUIRED NOTATIONS

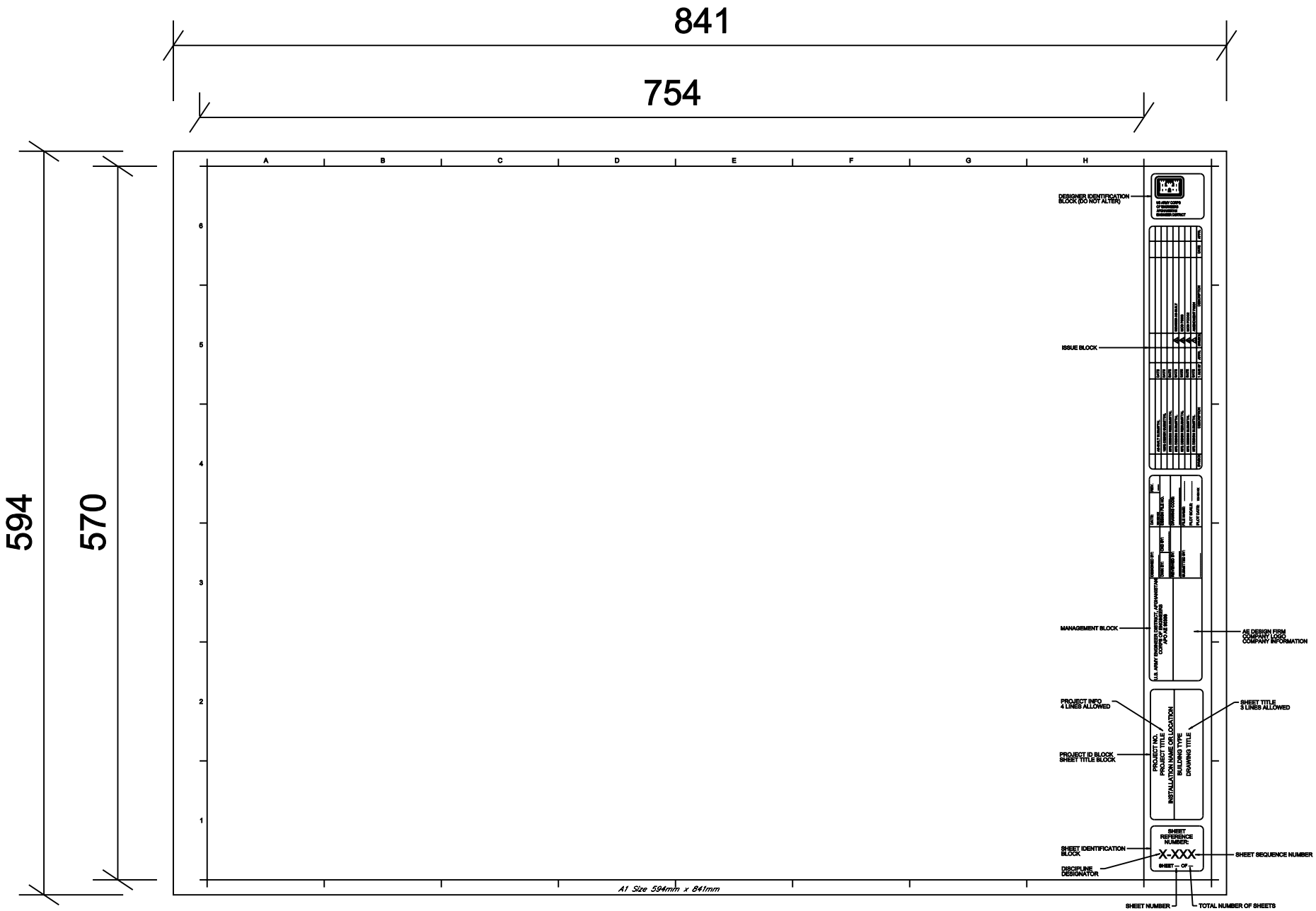

FIGURE 4 - BORDER SHEET SIZE

Attachment A

Project Location Maps

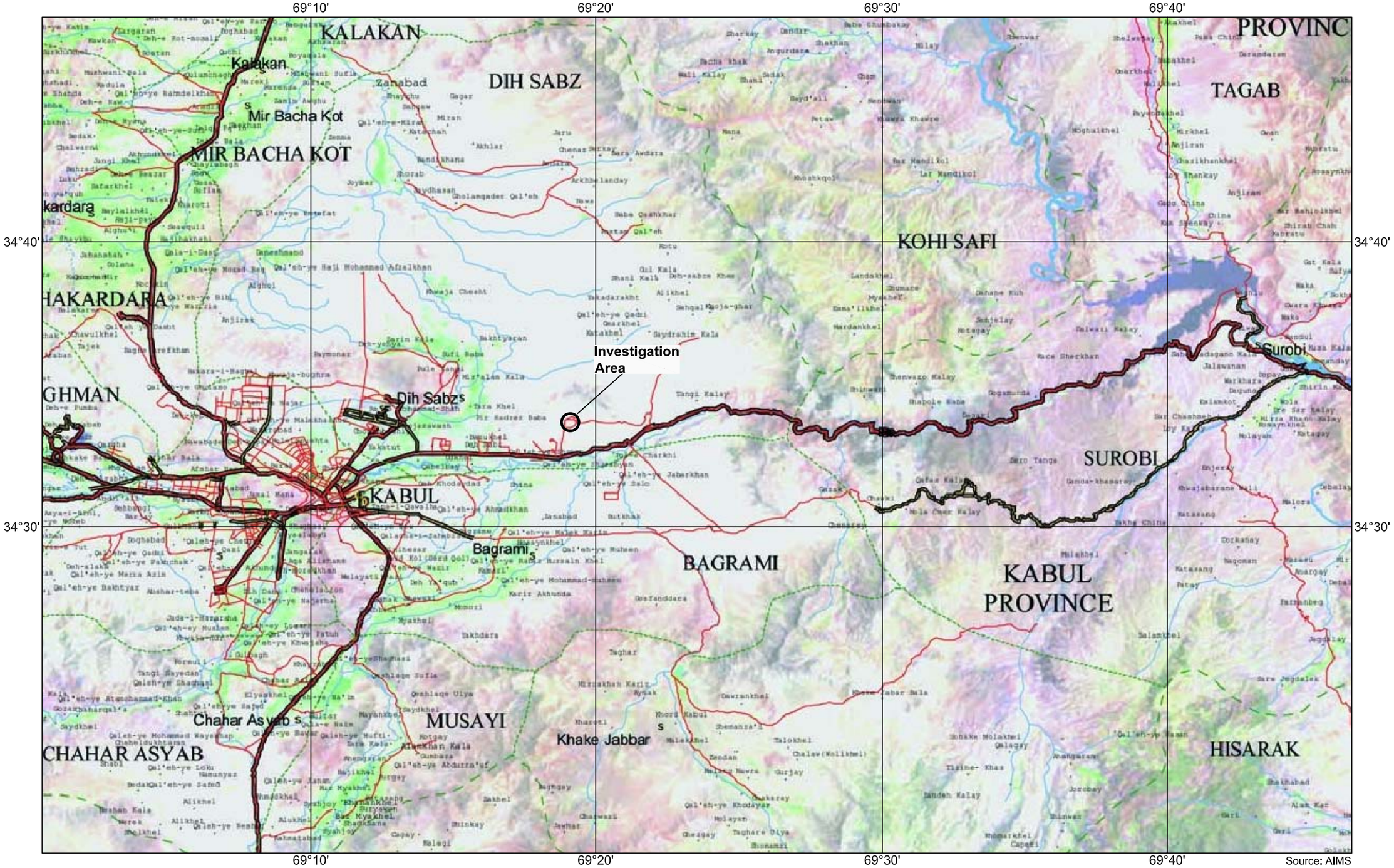

app_1_1.dwg

Kabul Military Training Center (KMTC)
Water Supply Study
Kabul, Afghanistan

CDM
Neue Bergstraße 9-13
64665 Alsbach

Site Location Map

Scale	Project-No.	Appendix
1:250,000	52088	1.1
	Report-No.	
	-	

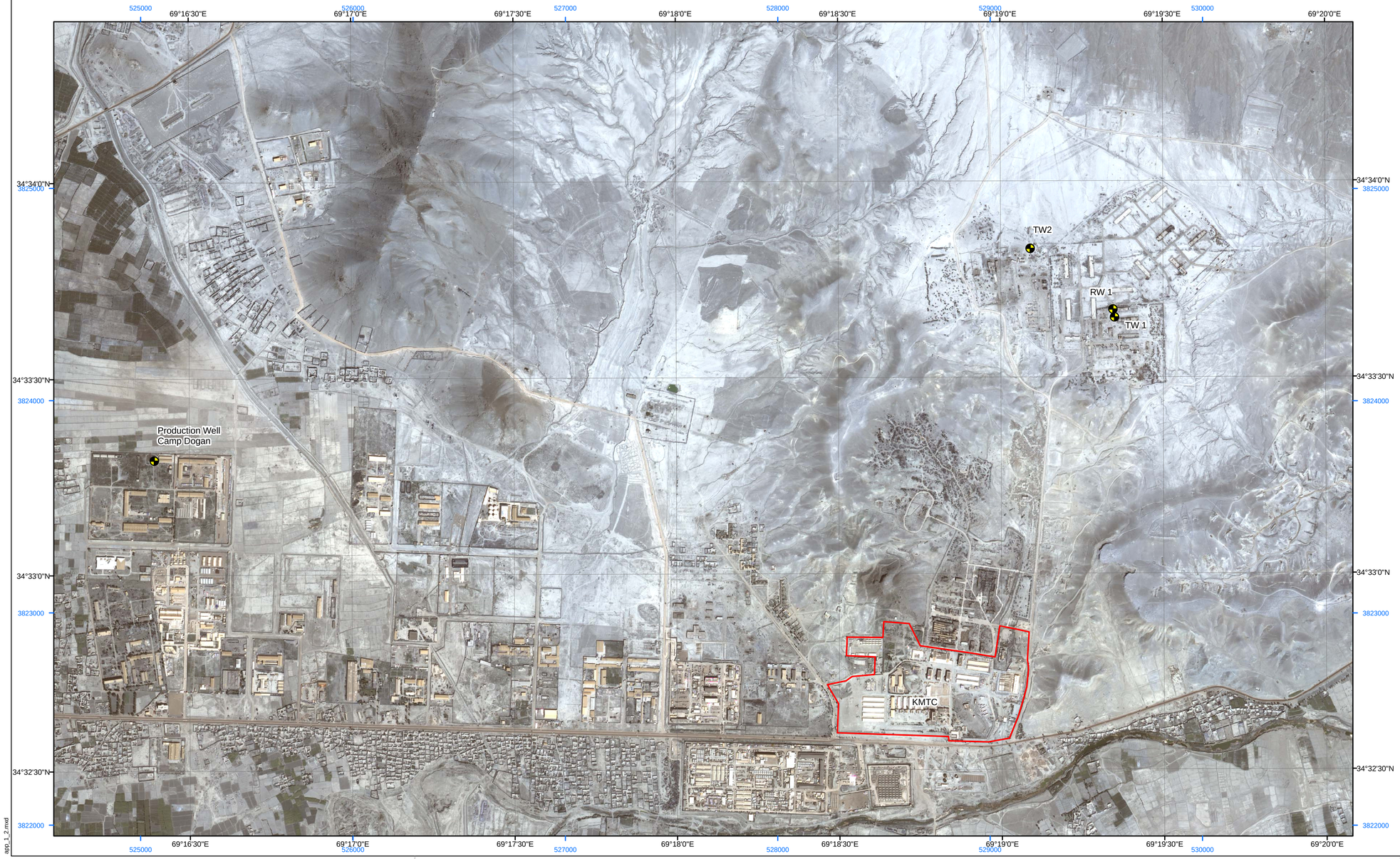

N

Legend

Groundwater well

0 300 600 900 1.200 1.500 Meters

Client

U.S. Army Corp of Engineers

Designed

CDM

Neue Bergstraße 9 - 13
64665 Alsbach

tel: 06257 504-0
fax: 06257 504-100
rhein-main@cdm-ag.de
www.cdm-ag.de

Project Kabul Military Training Center (KMTC)
Water Supply Study
Kabul, Afghanistan

Titel Satellite Image

	Drawn	Checked	Phase	Project-No.	Scale	Appendix
Date	08. Nov. 2006	08. Nov. 2006	-	52088	1 : 10,000	1.2
Name	hoh	krb		Report-No. -		
File	App_1_2.mxd					

app_1_2.mxd

Kabul Military Training Center (KMTC)
Water Supply Study
Kabul, Afghanistan

CDM
Neue Bergstraße 9-13
64665 Alsbach

Reconnaissance Photo of the Investigation Area (Central Part)

Scale	Project-No.	Appendix
-	52088	1.3
	Report-No.	
	-	

app_1_3.dwg

Attachment B

Test Well Report

KABUL MILITARY TRAINING CENTER
KABUL, AFGHANISTAN

WATER SUPPLY STUDY

FINAL REPORT

10 NOVEMBER 2006

Prepared by:

CDM

Neue Bergstrasse 9 – 13
64665 Alsbach, Germany

CONTRACT DACA90-03-D-0032, DELIVERY ORDER 017
for U.S. Army Corps of Engineers, Europe District
Konrad Adenauer Ring 39/ 65187 Wiesbaden

KMTC WATER SUPPLY STUDY

FINAL REPORT

CONTRACT DACA90-03-D-0032
DELIVERY ORDER 17

CDM verifies the completeness and accuracy of this report as signed on this date. CDM is accountable for electronic versions that match this printed copy verbatim. We accept no responsibility for changes made to electronic versions at this document.

Prepared by: _____ 10 November 2006
Bernd Bräutigam — Date
Senior Geologist

Approved by: _____ 10 November 2006
Guido Ebert — Date
Project Director

environment · water · infrastructure · geotechnics

Executive Summary

The purpose of this study was to obtain information about and project the maximum yield of the groundwater aquifers in the vicinity of the Kabul Military Training Center. This was accomplished through a hydro geological assessment, the results of which are presented in detail in this report. The ultimate conclusion of the study was that the investigation area is not suited for a steady and sustainable supply of moderate to large amounts of drinking water, but could be used as a secondary or temporary souce.

The project consisted of the following eight tasks: Task 1 – Pre-Mobilization Submittal Preparation; Task 2 – Site reconnaissance and UXO survey and clearance; Task 3 – Well drilling and installation; Task 4 – Capacity testing; Task 5 – Geophysical logging; Task 6 – Water quality sampling and analysis; Task 7 – Sieve Analyses; and Task 8 – Draft and Final letter reports. These tasks were conducted from 26 July 2006 to 23 October 2006 and the final report was submitted 13 November 2006.

The resulting Final Report is divided into seven sections including the introduction, an overview of the regional geology and hydro geology as well as of the climatic and geomorphologic conditions, a description of the site including a brief description related to the UXO survey and clearance, a detailed explanation of the work methodology, the results of the well tests and chemical analyses, conclusions and recommendations, and a list of references. Additionally the Final Report includes as appendices maps and aerial images showing the investigation area, the Mine/UXO Clearance reports, all log data, including the geologic log, the gamma log and the well designs, all data gathered from pumping tests, soil and groundwater analyses as well as basic calculations including all related drawings, tables, charts and graphs, a short photo documentation of the project, and the response to comments on the Draft Report.

The investigation area is located east of Kabul City about 2 km north of Jalalabad Road and is situated on a former Russian military base. During the course of the investigation, three older Russian wells were located and one was used to provide further information for the study. The initial step in the investigation included evaluation of historical data and real property issues to determine the location of the test wells. The target area was then inspected by a demining team and a UXO survey was completed. Due to time constraints, the two test wells of different depths were drilled concurrently (with one being initiated slightly before the other) by two different companies. Soil samples were taken during the drilling to permit geological logging.

Once the wells had been installed and developed, pump tests including disinfection and water sampling were performed. Both test wells had a three step drawdown test done and based on the results of the drawdown tests, 24 hour pump tests were designed. All geophysical logging was done using mobile gamma equipment that while not ideal was indispensable in defining the screen areas.

During the pump test water samples were collected for chemical, bacteriological, and isotope analyses. Water samples taken during a pump test, especially during the final stage, are very likely representative of the aquifer water quality. Additionally, one bailing sample was taken for analysis from one of the old Russian wells. Due to the length of time it takes to perform the isotope analysis those results will be presented as a stand alone document delivered at a later date (expected prior to the end of calendar year 2006).

The results of the capacity and pump testing indicate on the surface that a sustainable well production of 400 to 430 m3 (about 5 l/s) is possible; however due to the basin boundaries and the lack of groundwater recharge, if three wells were installed that each produced 5 l/s, the basin would be pumped dry within 17 years. A temporary groundwater extraction would be possible, but to be sustainable, must be limited to a maximum daily yield of 340,000 gpd (about 15 l/s for the entire basin) and a maximum pumping time of 45 days per year.

The groundwater quality of both test wells meets water quality standards for dinking water both according to United States and European Union regulations. The results do indicate that Test Well TW1 is connected to the upper aquifer the groundwater of which has significantly more mineralization that the groundwater of the lower aquifer. As the site is a former military base, the samples were also analyzed for TPH; however it was not detected in either the groundwater of the test wells or in the bailed sample of the old Russian well.

Although the overall conclusion is that the investigation area is not suited for a steady and sustainable supply of moderate to large amounts of drinking water, the groundwater is of good quality and no purification is likely required. The groundwater reservoir could be used as a temporary secondary source in case of accidents or damage to the main reservoir/distribution pipeline.

Table of Contents

Signature Page i
Executive Summary ii
Table of Contents iv
List of Appendices v
List of Tables vi
List of Figures vi
List of Acronyms and Abbreviations viii

Section 1 Introduction 1-1
1.1 Purpose and Scope 1-1
1.2 Key Personnel 1-3
1.3 Definitions 1-3
1.4 Report Organization 1-4
1.5 Project Location 1-5

Section 2 Hydro geological Overview 2-1
2.1 Climate 2-1
2.2 Hydrology 2-4
2.3 Geology and Hydrogeology 2-9

Section 3 Site Descriptions 3-1

Section 4 Work Methodology 4-1
4.1 Pre-Mobilization, Submittal Preparation 4-1
4.2 Site reconnaissance and UXO survey and clearance 4-1
4.3 Well drilling and installation 4-1
4.4 Capacity Testing 4-4
4.5 Geophysical Logging 4-5
4.6 Water Quality Sampling and Analysis 4-6
4.7 Sieve Analysis 4-7

Section 5 Investigation Results 5-1
5.1 Local Geology and Hydrogeology 5-1
5.2 Capacity and Pump Testing 5-2
5.3 Water Quality Analyses 5-4

Section 6 Conclusions and Recommendations 6-1

Section 7 References 7-1

List of Appendices

Appendix 1 – Maps and Aerial Images

1.1 Site Location Map (scale 1:250,000)

1.2 Satellite Image (scale 1:10,000)

1.3 Reconnaissance Photo of the Investigation Area (Central Part)

Appendix 2 – Mine/ UXO Clearance Reports

Appendix 3 – Log Data and Well Design

3.1 Geological Logs and Well Design

3.1.1 Test well 1 (TW 1)

3.1.2 Test well 2 (TW 2)

3.2 Gamma Logs

3.2.1 Test well 1 (TW 1)

3.2.2 Test well 2 (TW 2)

3.2.3 Test well 1 (TW 1) and Test well 2 (TW 2)

Appendix 4 – Data

4.1 Step Drawdown Tests - Data Sheets and Graphs

4.2 Pump Tests - Data Sheets and Graphs

4.3 Soil Sieve Analyses - Data Sheets and Graphs

4.3.1 Test well 1 (TW 1)

4.3.2 Test well 2 (TW 2)

4.4 Chemical Groundwater Analyses -Laboratory Reports

4.5 Isotope Analyses - Laboratory Reports and Interpretation of Data

4.6 Ministry of Mines and Energy, Kabul, Afghanistan: Hydro geological Investigation Study

Appendix 5 – Photo Documentation

Appendix 6 – Response to Comments on the Draft Report

List of Tables

Table 2-1: Main Hydrographic Features of the Kabul River Basin (CGIAR/IWMI, 2002) 2-6

Table 4-1: Basic Data of the Test Wells 4-2

Table 4-2: Chronological order of drilling work and well installation 4-3

Table 4-3: Compilation of Water Samples and Parameter for Analyses 4-6

Table 5-1: Basic Aquifer Parameters 5-3

Table 5-2: Well Efficiency 5-3

Table 5-3: Results of Water Quality Analyses (Field Parameters) 5-5

Table 5-4: Results of Water Quality Analyses and Maximum Contaminant Levels for Public Water Supplies According to EPA and European Union 5-6

Table 5-5: Results of Water Quality Analyses of RW 1 (bailed sample) 5-7

List of Figures

Figure 1-1: Location of the Investigation Area 1-5

Figure 2-1: Average Temperature for Central Indus Basin 2-1

Figure 2-2: Average Precipitation for Central Indus Basin 2-2

Figure 2-3: Average Climate Conditions for Kabul (database 2002-2005) 2-3

Figure 2-4: Annual Average Precipitation (left) and Monthly Average Precipitation, Box-Whisker Plot (right), (BGR, 2005) 2-4

Figure 2-5: Difference between the average monthly precipitation and evapotranspiration after IVANOV (left) and TURC (right), (BGR, 2005) 2-5

Figure 2-6: Main River Basins in Afghanistan 2-5

Figure 2-7: Surface Water Resources of the Afghanistan Indus River Basin (USACE, 2002) 2-7

Figure 2-8: Location of the Investigation Area in Relation to the Larger Kabul Basin (USGS, 2005, 2006) 2-8

Figure 2-9: Geology East of Kabul (USGS, 2005, 2006) 2-9

Figure 2-10: Location of the Investigation Area within the Larger Hydrogeological Structures (Yield) and in Relation to Kabul Basin Aquifers 2-12

Figure 2-11: Location of the Investigation Area within the Larger Hydrogeological Structures (Lithology) 2-13

Figure 2-12: Water Table in the South-Eastern Part of the Kabul Basin, Nov. 2004 (USGS 2005) 2-14

Figure 2-13: Drinking Water Wells in the Vicinity of the Investigation Area (USGS 2005) 2-15

Figure 3-1: Location of Test Wells and Older Wells at the Former Russian Military Site (Topographical Background see Figure 1-1) 3-1

Figure 3-2: View from Gharib Ghar to the South. Showing the Main Part of the Investigation Area, KMTC and the Kabul River Plain South of Jalalabad Road 3-2

Figure 3-3: Location of the Investigation Area in Relation to Outcropping Neogene and Paleozoic Rocks. View to the North with Google Earth. 3-3

List of Acronyms and Abbreviations

AED	Corps of Engineers Afghanistan District, Kabul, Afghanistan
ADD	Average daily demand
asl	Above sea level
bgs	Below ground surface
DIN	Deutsche Industrienorm (German Industrial Standard)
DIN EN	Deutsche Einheitsverfahren (German Standard Prozess)
EUD	Corps of Engineers Europe District, Wiesbaden, Germany
gpcd	Gallons per capita per day
gpd	Gallons per day
gpm	Gallons per minute
gs	Ground surface
GWW	Groundwater well
HASP	Occupational Health and Safety Plan
HM	Heavy metals
ICS	International Commission on Stratigraphy
KMTC	Kabul Military Training Center
Lpcd	Liters per capita per day
MEPS	Military Entrance Processing Station
MoH	Environmental Health Department of the Ministry of Health
NTU	Nephelometric Turbidity Units
PVC	Polyvinyl Chloride
QA	Quality Assurance
SOS	Schedule of Services
TDS	Total dissolved solids
TOC	Top of Casing
USACE	United States Army Corps of Engineers
UTM	Universal Transverse Mercator

UXO	Unexploded Ordnances
UXO ASAP	UXO Anomaly Survey and Avoidance Plan
UXO CRP	UXO Clearance and Removal Plan
WP	Work Plan

Section 1
Introduction

1.1 Purpose and Scope

This Water Supply Study for the Kabul Military Training Center (KMTC), Kabul Afghanistan, has been developed by CDM pursuant to the U.S. Army Corps of Engineers (USACE), Europe District (EUD), Contract Number DACA90-03-D-0032, Delivery Order 017, awarded 14 July 2006.

The purpose of the study was to collect information about the local groundwater aquifer in the vicinity of the KMTC with the purpose of obtaining data on the maximum yield of the aquifer. Therefore a hydro geological assessment was performed to identify water supply sources which potentially meet the water supply needs. This included drilling two test wells to collect aquifer data, performing capacity testing and pumping tests, and water quality sampling and analysis.

The KMTC including the Military Entrance Processing Station (MEPS) is located just east of the eastern boundary of the City of Kabul north the Jalalabad Road. The groundwater well (GWW) located at Camp Dogan (Turkish Compound) is the sole source of water supply to KMTC. Its location is 3.8 kilometers (3.3 km direct line) to the WNW and it produces an estimated 35,000 gallons per hour (gal/hr) or 37 liters per second (l/s). The established water usage rate is 41 gpcd (155.2 lpcd). The ultimate resident plus non-resident population for KMTC and MEPS is expected to be approximately 10,000 people. The total average daily water production rate to support 10,000 people is 410,000 gallons per day (gpd), known as the average daily demand (ADD). Aquifer and well pumps should maintain a safe production yield rate of 2 x the ADD or approximately 820,000 gpd (3,104 m^3/d). In theory, if two new GWW's are planned for development, each well should be capable of 284 gallons per minute (gpm) or 18 l/s.

According the SOS the following eight tasks had to be completed:

- <u>Task 1: Pre-Mobilization Submittal Preparation</u>.
  Preparation of draft and final versions of the Work Plan (WP), including a Occupational Health and Safety Plan (HASP), preparation of draft and final versions of an Unexploded Ordnances (UXO) Anomaly Survey and Avoidance Plan (UXO ASAP) and a UXO Clearance and Removal Plan (UXO CRP).

- Task 2: Site reconnaissance and UXO survey and clearance.
  Evaluation of existing data, determination of drilling locations, and UXO anomaly survey and clearance.
- Task 3: Well drilling and installation.
  Performance of the drilling which consisted of soil sampling, well installation and final well development including pumping and surging of each well.
- Task 4: Capacity testing.
  Performance of a step drawdown test (3 steps) and a 24 hour pumping test in each well.
- Task 5: Geophysical logging.
  Performance of geophysical logging (electrical logging) of each borehole after drilling but prior to installation of the well.
- Task 6: Water quality sampling and analysis.
  Sampling of groundwater samples for chemical and bacteriological analyses after well sterilization.
- Task 7: Sieve Analyses:
  Performance of soil sieve analysis from selected samples.
- Task 8: Draft and final letter reports.
  Preparation of Draft and Final Letter Reports comprising the details of the drilling and the installation of two aquifer test wells, the results and evaluation of capacity testing, as well as pump testing and water quality analysis results. Preparation and delivery of the final project CD-ROM containing all project documents including the Final WP, the Final HASP, the Final UXO ASAP and UXO CRP, the Final Letter Reports, all Meeting Minutes, and the backup data files for the report (maps, drawings, tables, charts, and graphs).

1.2 Key Personnel

Key project personnel are:

- Guido Ebert
  Program Director /Project Manager
  guido.ebert@cdm-ag.de, +49 6257-504-410, +49 160 881 5596 mobile
- Judith Kronenberger
  Project Manager (Deputy)
  judith.kronenberger@cdm-ag.de, +49 6257-504-430, +49 151 167 17934 mobile
- Bernd Bräutigam
  Senior Geologist, Project Engineer
  braeutigam-consult@web.de, braeutigamb@cdm.com
  +49 179 140 0017 mobile Germany, +93 799 806918 mobile Afghanistan
- Mohammad Haroon
  Engineering Technician, Supervision field works
  haroonmm@cdm.com, +93 799 811764 mobile

Sieve analyses were carried out by an engineer named Fahim Amini.

1.3 Definitions

Below are the common terms used in this report and their definitions.

- Acid Capacity. According to DIN, acid capacity is the quantitative capability of an aqueous medium to react with hydroxonium ions. The analysis for this parameter primarily detects the concentration of hydrogen carbonate, carbonate and hydroxide. Other buffer substances such as ammonia, borate, phosphate, silicates, humic acids and other organic anions may be detected by this analysis
- Aquifer. Permeable, water-bearing formation capable of yielding exploitable quantities of water. Saturated sandy and gravely layers divided by semi-confining beds (aquitards).
- Indus Basin. Hydrological unit comprises basins of rivers (located in Afghanistan) flowing into the Indus river (see Figure 2-6).
- Investigation Area. Whole plain area south of Gharib Ghar Mountain and east of Surghundi (Surghundey) Hill, north and west of unnamed hills/ hillocks about 3 km

north of Jalalabad Road (see Figure 1-1). A former Russian military site (Repair Center) is located in the southern half of the investigation area.

- Neogene. The Neogene Period traditionally comprised the Miocene and Pliocene Epochs, the Quaternary the Pleistocene and Holocene. According to the International Commission on Stratigraphy (ICS), since 2004 the Quarternary was subsumed into the Neogene. To prevent some confusion with available literature (Section 7) in this report the word "Neogene" is used in the former understanding and characterizes the time before Pleistocene.
- Site. Locations where test wells were drilled (drill sites). Each drill site encomapsses not only the location of the well but the entire area cleared by the demining team and subsequently used for the drilling process (location of mud ponds, caravan site, cooking place etc.). Site # 1 includes the old Russian drinking water well RW 1.
- Site Area. Area in which both drill sites are located. Part of the investigation area.
- Quaternary. See Neogene

1.4 Report Organization

This report is divided in seven sections. Section 1 comprises the introduction. Section 2 gives an overview of the regional geology and hydro geology as well as of the climatic and geomorphologic conditions. Section 3 contains the site descriptions including a brief description related to the UXO survey and clearance. The work methodology is detailed in Section 4. Section 5 presents the results of the well tests and chemical analyses. Conclusions and recommendations are presented in Section 6. A list of references is provided in Section 7.

Appendix 1 contains maps and aerial images showing the investigation area. Appendix 2 includes the Mine/ UXO Clearance reports. Appendix 3 contains all log data, including the geologic log, the gamma log and the well designs. Appendix 4 presents all data gathered from pumping tests, soil and groundwater analyses as well as basic calculations including all related drawings, tables, charts and graphs. A short photo documentation of the project is located in Appendix 5. Appendix 6 contains the response to comments on the Draft Report.

1.5 Project Location

The Investigation area is located east of Kabul City about 2 km north of Jalalabad Road (see Figure 1-1) and forms a plain area between soft hills/ hillocks in the west, south, and east and the rocky mountain Gharib Ghar to the north. Both drill sites are located in the southern half of the plain area, at a former Russian military repair base. The center coordinates of the investigation area are 34.3349 °N 69.1921 °E (UTM coordinates: x 529579,43 / y 3824708,29, the average elevation/ height is 1840 m asl.

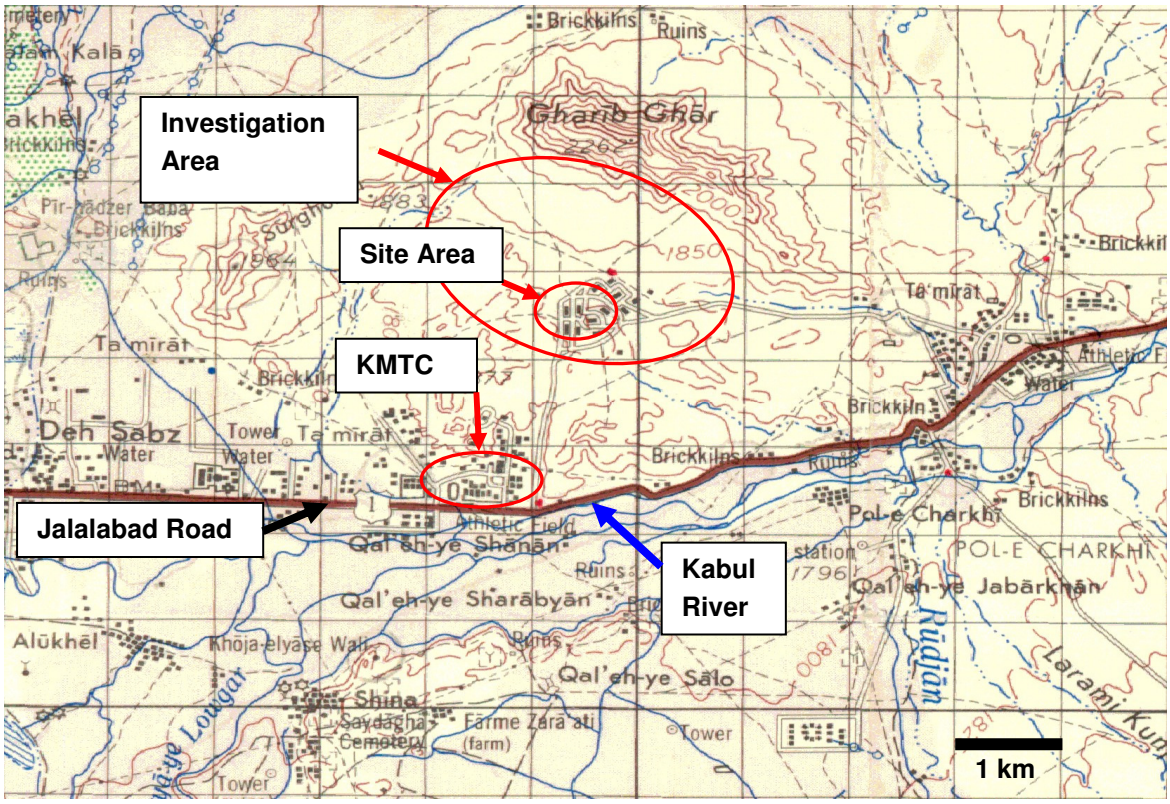

Figure 1-1: Location of the Investigation Area

environment · water · infrastructure · geotechnics

Section 2
Hydro geological Overview

Below is a brief description of climatic, hydrological, and hydro geological conditions of the Kabul region. Some basic regional climate data are shown in Figure 2-1 and Figure 2-2 (www.aims.org.af).

2.1 Climate

Afghanistan, located in the middle of an arid belt is characterized by a continental climate with major daytime and night-time temperature fluctuations.

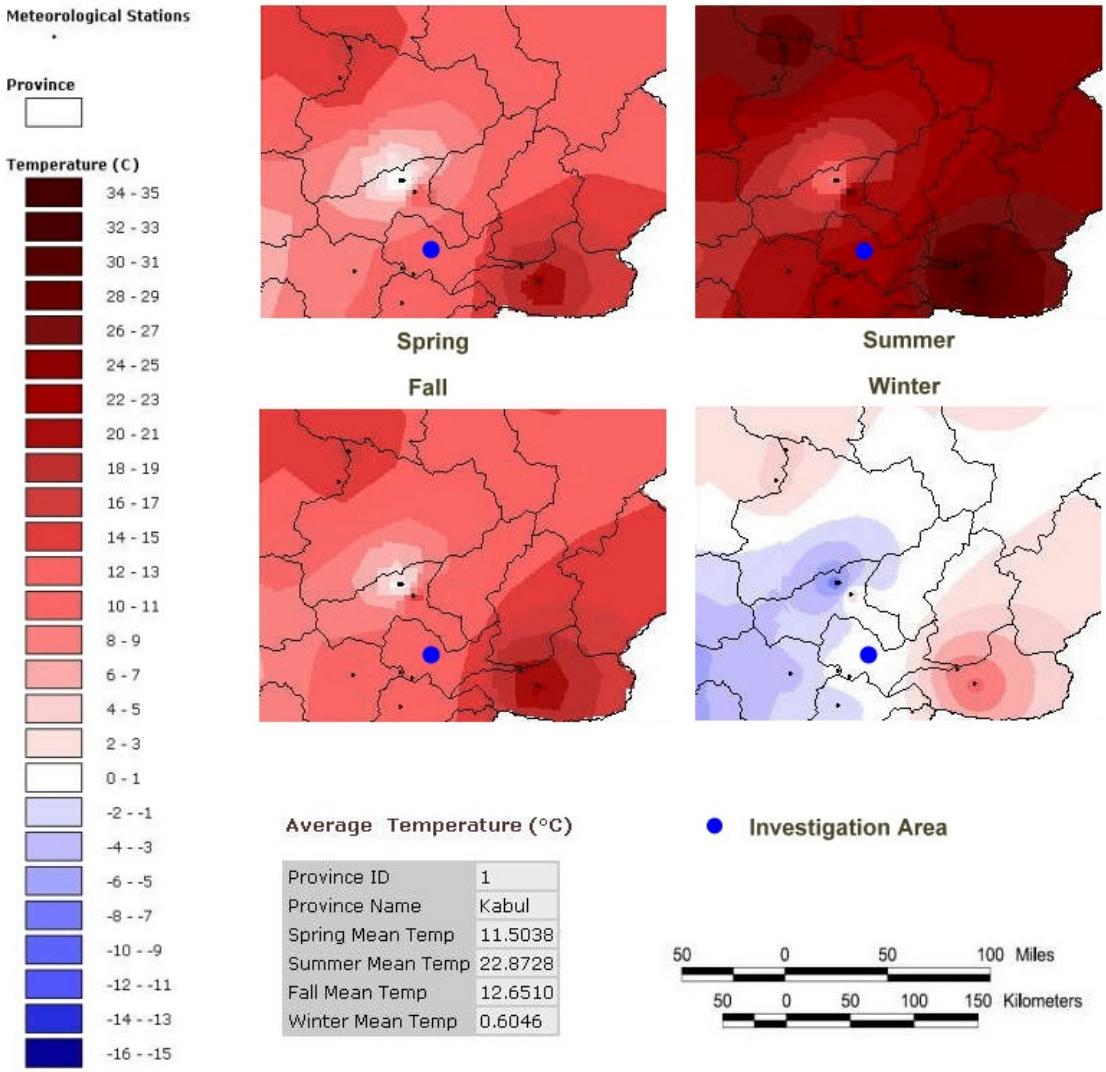

Figure 2-1: Average Temperature for Central Indus Basin

environment · water · infrastructure · geotechnics

Temperatures vary from -30°C and less in the winter (average of -10°C) to 50°C in the summer (average of 34°C), partly combined with drought conditions. Generally the precipitation is directly correlated with altitude varying from less than 100 mm per year at altitudes below 1,000 m and 800 mm per year above 5,000 m. Therefore, more than 50 percent of the territory, lower than 2000 m asl, receives 100 mm to 300 mm of precipitation annually. With the exception of the eastern border regions the precipitation occurs mainly between December and April.

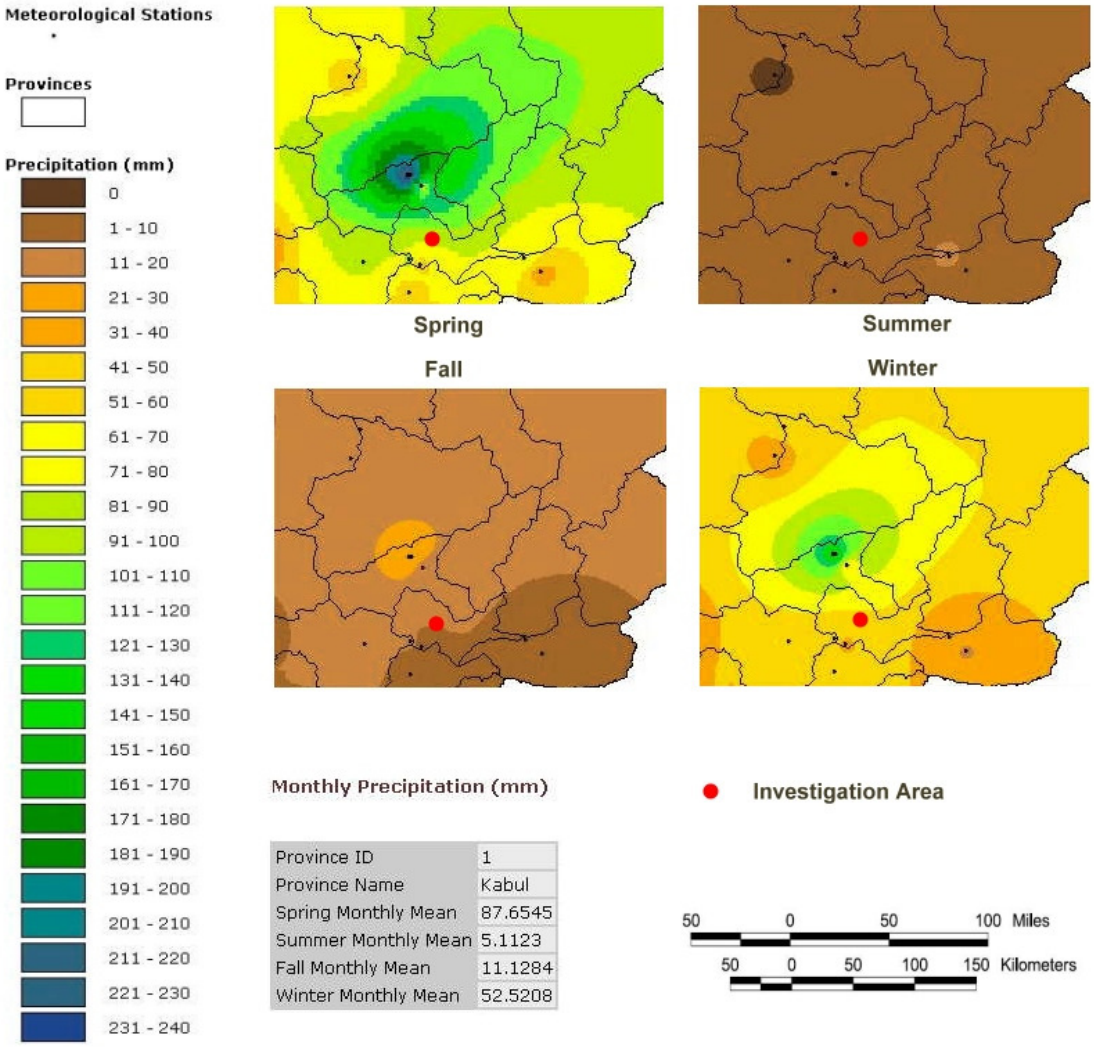

Figure 2-2: Average Precipitation for Central Indus Basin

In winter much of precipitation falls in the form of snow in the central mountainous regions. Snowfall is about 15 to 30 cm annually but can reach more than 2 meters in the higher mountains. Generally the deviation of annual precipitation from the long term average normal precipitation in different part of the country varies in the ranges of 60 % to 240 % for the whole country and 52 % to 173 % for Kabul (Figure 2-2).

The Investigation area is located near Kabul City so the following data are also representative for this area (CGIAR, database 1957-1978):

Long term average normal amount of precipitation:	316.0 mm
Long term average maximum amount of precipitation:	547.8 mm
Long term average minimum amount of precipitation:	164.9 mm

Data for long term normal precipitation differs depending on databases used. Unfortunately the most reliable database is more than 30 years old covering the period 1957 to 1978. These data were used by CGIAR and BGR; the latter presented in detail in the report from 2005 (BGR, 2005), Section 2.2. Some newer data were used by BBC (www.bbc.co.uk/weather), see Figure 2-3.

Average Conditions

Kabul, Afghanistan

Month	Average Sunlight (hours)	Temperature Average Min	Temperature Average Max	Temperature Record Min	Temperature Record Max	Discomfort from heat and humidity	Relative humidity am	Relative humidity pm	Average Precipitation (mm)	Wet Days (+0.25 mm)
Jan	6	-8	2	-21	14	-	80	70	31	2
Feb	6	-6	4	-21	23	-	79	62	36	3
March	6	1	12	-14	25	-	76	44	94	7
April	7	6	19	-3	28	-	69	35	102	6
May	10	11	26	1	35	Moderate	61	32	20	2
June	12	13	31	6	37	Medium	52	24	5	0.6
July	11	16	33	11	38	Medium	51	22	3	0.4
Aug	11	15	33	8	40	Medium	54	23	3	0.4
Sept	10	11	29	2	36	Moderate	58	18	0	0.1
Oct	9	6	23	-3	32	-	59	22	15	0.9
Nov	8	1	17	-15	25	-	67	31	20	2
Dec	6	-3	8	-15	19	-	76	53	10	1

The following bar chart for **Kabul, Afghanistan** shows the years average weather condition readings covering rain, average maximum daily temperature and average minimum temperature.

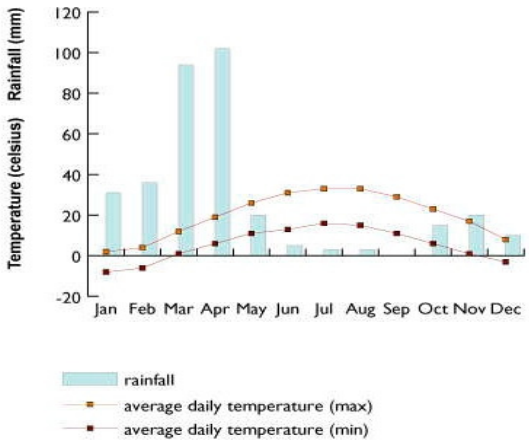

Figure 2-3: Average Climate Conditions for Kabul (database 2002-2005)

environment · water · infrastructure · geotechnics

2.2 Hydrology

The hydro-meteorological data for Kabul are as follows (BGR, 2002):

The average annual precipitation is very low (330 mm) with major fluctuations from year to year (see Figure 2-4). The monthly precipitation changes between 20 and 80 mm in winter and spring, though in summer the precipitation is almost always below 3 mm. Figure 2-4 highlights the change in precipitation during the course of a typical year. Precipitation in winter (November – March) is mainly in the form of snow, with January and February being the months with the greatest snow fall (about 15 cm) and December is the month with the most days of snow fall (about 23 days). The 21 year observation period shows a clear negative correlation between mean annual precipitation and mean annual temperature.

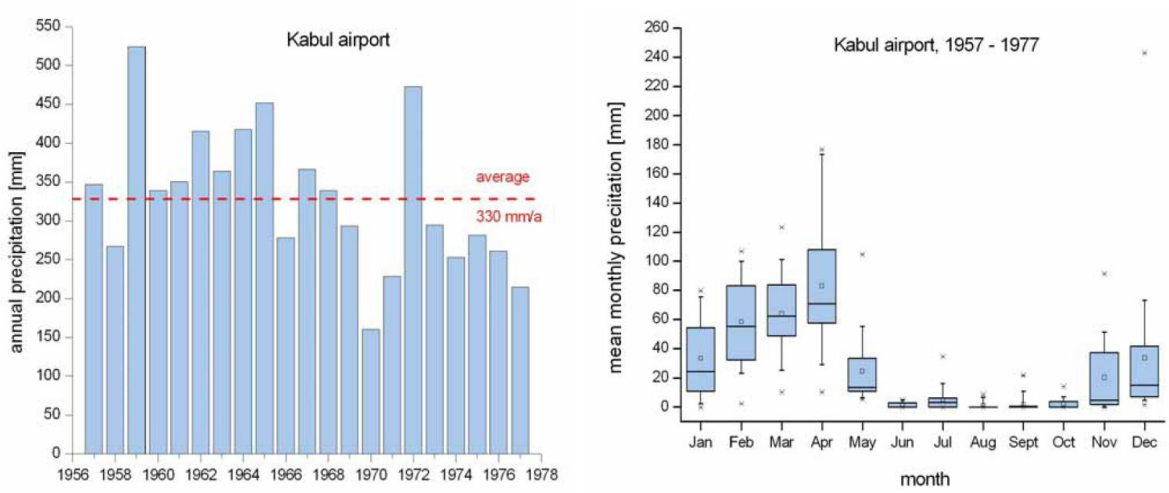

Figure 2-4: Annual Average Precipitation (left) and Monthly Average Precipitation, Box-Whisker Plot (right), (BGR, 2005)

The potential evapotranspiration is an important parameter for the estimation of groundwater recharge rates. Based on the available data from 1957 – 1977 the potential evapotranspiration was calculated using different approaches. Results are shown in Figure 2-5. Because evapotranspiration is less than precipitation in winter time (December – April) Figure 2-5 shows positive values for these months only. According to this groundwater regeneration only takes place from December to April, for the rest of the year, especially from June to September evapotranspiration is much higher than precipitation. However, because precipitation during the winter period mainly falls as snow and is therefore lost during snow melting the actual volume of precipitation available for groundwater regeneration is much lower. Additionally the surface discharge is not taken into account. Based on these data the maximum possible groundwater recharge rate of 32 mm/year for Kabul (after TURC, see Figure 2-5) is only a theoretical

environment · water · infrastructure · geotechnics

one, because this figure does not include any losses by surface discharge and because the precipitation falling in the form of snow has not been given consideration.

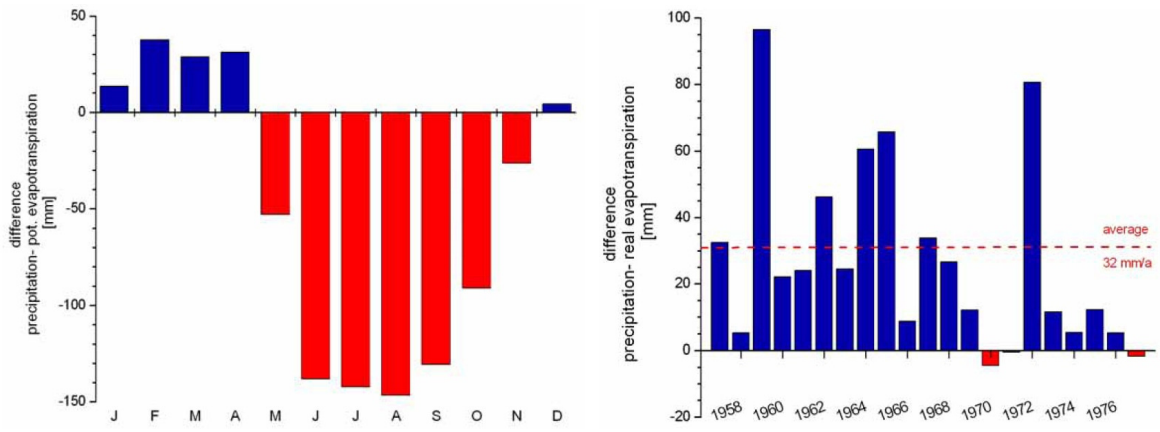

Figure 2-5: Difference between the average monthly precipitation and evapotranspiration after IVANOV (left) and TURC (right), (BGR, 2005)

So it can be assumed that it is unlikely that groundwater regeneration took place from 1957 to 1977 directly from precipitation in the investigation area, and due to the recent trend toward a much dryer climate it is also not likely taking place today.

The territory of Afghanistan drains into three river systems (see Figure 2-6):

- the Amu Darya basin in the north,
- the Sistan-Hilmand basin in the south / southwest and
- the Indus basin in the east

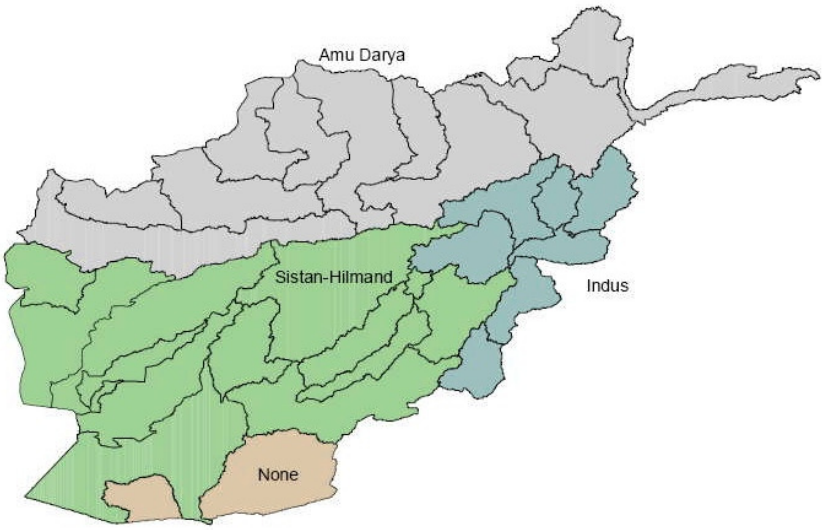

Figure 2-6: Main River Basins in Afghanistan

environment · water · infrastructure · geotechnics

The Afghanistan Indus basin can be divided into the South-eastern River basin and the Kabul River basin. The Kabul River system including Punjsher River and its tributaries drains only 9 % of the country, but generates almost 40 % of its total runoff. In Table 2-1 the main hydrographic features of the rivers of the Kabul River basin are summarized.

Table 2-1: Main Hydrographic Features of the Kabul River Basin (CGIAR/IWMI, 2002)

Name of the River	Length (km)	Level (m asl)		Average Slope (%)	Basin Area (km²)	Basin Perimeter (km)
		Start	End			
Kabul	332	3700	375	1	67800	1613
Upper part	157	3700	1000	1.72		
Lower part	175	1000	375	0.36		
Loger	280	3500	1790	0.61	9830	657
Upper part	144	3500	2190	0.91		
Lower part	136	2190	1790	0.3		
Panjshir	228	4560	1000	1.6	12000	541
Lower part	131	4650	1605	2.33		
Lower part	97	1605	1000	0.62		
Laghman	171	4450	610	2.25	6120	410
Upper part	111	4450	1000	3.11		
Lower part	60	1000	6100	0.65		
Kunar	462	5900	540	1.16	26100	595
Upper part	300	5900	1040	1.62		
Lower part	162	1040	540	0.31		
Ghorband	125	3500	1475	1.62	4360	388
Salang	44	4200	1510	6.12	510	110
Shatol	36	4200	1590	7.26	205	76
Tagab	60	3600	1000	4.34	800	125
Surkhrod	125	3350	580	2.22	2620	280
Peech	134	4250	790	2.59	3860	322
Landay sind	120	4300	1035	2.73	3260	274
Paghman	30	3700	1800	6.33	500	98
Charkh	57	3000	1927	1.88	880	148
Chakari	48	3300	1774	3.18	460	112

No current discharge data are available for surface water. Historical data (1956-1964) were summarized by (USACE, 2002) and are as follows for the Kabul region (Number of the gauging station, see Figure 2-7:

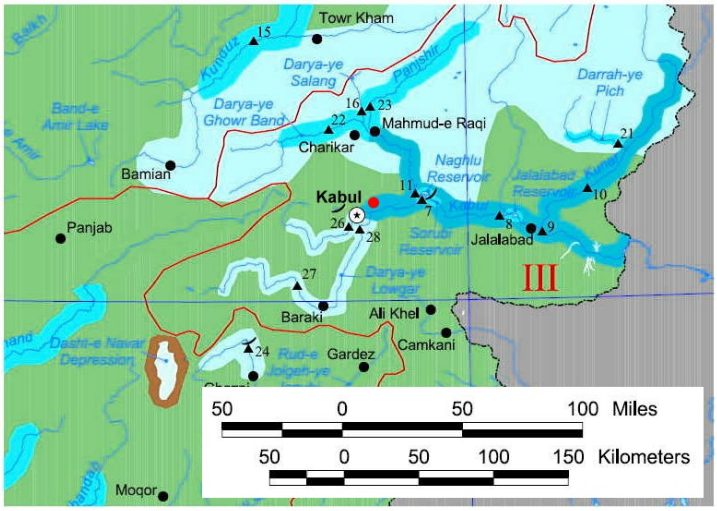

Map Unit FRESH WATER PERENNIALLY AVAILABLE

1 Moderate to very large quantities of fresh water are available year-round from streams. High flow generally occurs from March to May. Irrigation diversions may drastically reduce the quantity of water available.

5 Meager to large quantities of water are available from intermittent streams, reservoirs, and depressions during the high-flow period, which generally occurs from March to May. These streams are generally fresh during high flow, but become increasingly brackish to saline as they are diverted for irrigation or begin to dry up.

HYDROLOGICAL BASINS:
I Amu Darya
II Darya-ye Helmand
III Indus

Investigation Area

Hydrological basin boundary

40 Stream gaging station

Quantitative Terms:
Enormous = >5,000 cubic meters per second (m^3/s) (176,550 cubic feet per second (ft^3/s))
Very large = >500 to 5,000 m^3/s (17,655 to 176,550 ft^3/s)
Large = >100 to 500 m^3/s (3,530 to 17,655 ft^3/s)
Moderate = >10 to 100 m^3/s (350 to 3,530 ft^3/s)
Small = >1 to 10 m^3/s (35 to 350 ft^3/s)
Very small = >0.1 to 1 m^3/s (3.5 to 35 ft^3/s)
Meager = >0.01 m^3/s (0.35 to 3.5 ft^3/s)
Unsuitable = ≤0.01 m^3/s (0.35 ft^3/s)

Figure 2-7: Surface Water Resources of the Afghanistan Indus River Basin (USACE, 2002)

7 Kabul, measured near Naghlu from October 1959 to September 1964
minimum monthly flow of 35 m^3/s
maximum monthly flow of 563 m^3/s
average flow of 140 m^3/s.

11 Panjshir, measured near the mouth of the river from January to September 1960
minimum flow of 33 m^3/s
maximum flow of 714 m^3/s.

26 Kabul, measured near Tangi- Saidan from October 1961 to September 1962
minimum flow of 0.2 m^3/s
maximum flow of 18.6 m^3/s
average flow of 2.81 m^3/s.

28 Darya-ye Lowgar, measured near Sangi-Nouwishta from October 1961 to September 1962
minimum monthly flow of 0.18 m^3/s
maximum monthly flow of 30.8 m^3/s
average flow of 10.90 m^3/s.

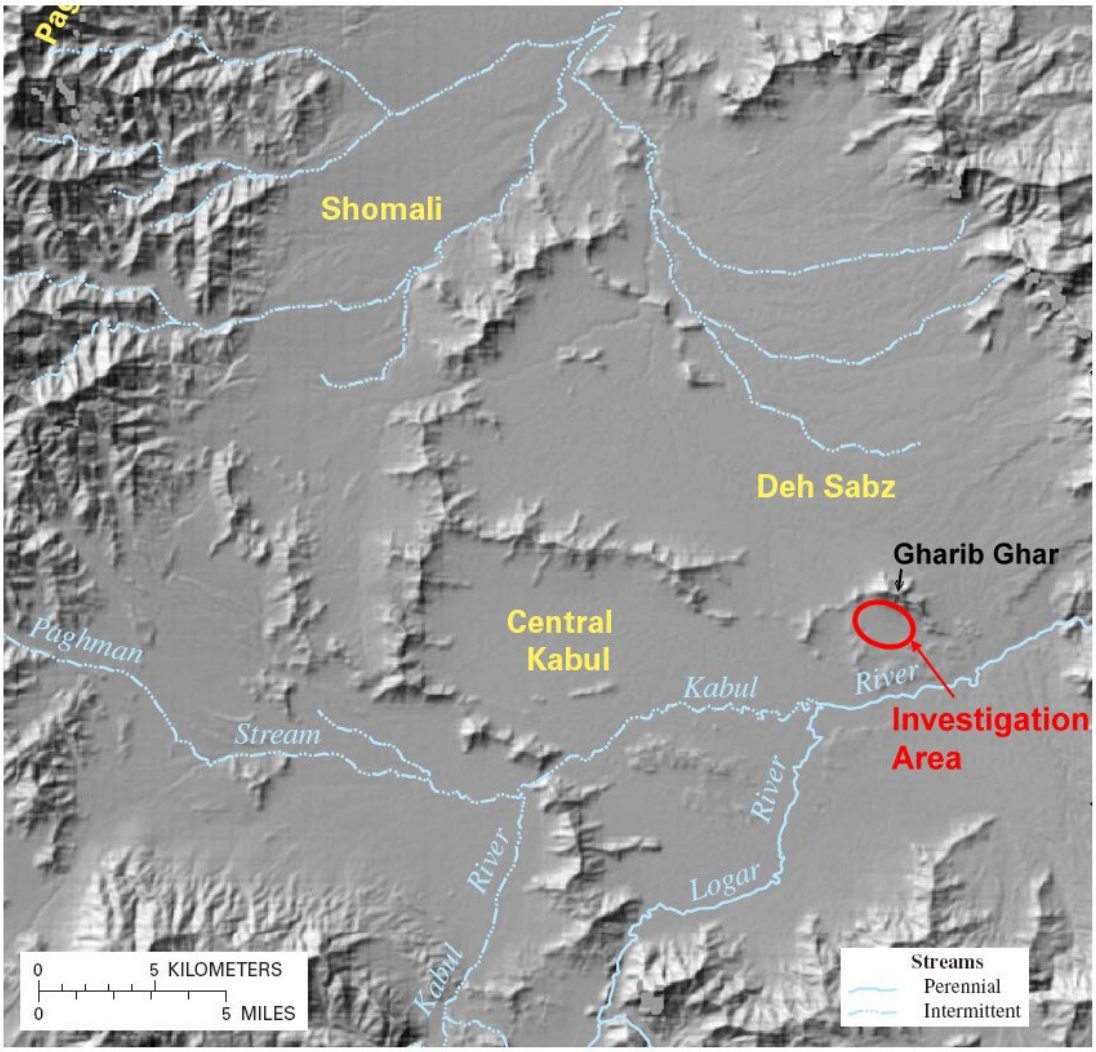

Figure 2-8: Location of the Investigation Area in Relation to the Larger Kabul Basin (USGS, 2005, 2006)

Figure 2-8 shows the morphological setting of the investigation area within the larger Kabul basin and the position of the investigation area in relation to the river discharge areas.

In the recent years the Kabul River has been dry for much of the year nearby and in the city of Kabul due to diversions for irrigation but also due to droughts the country has been experiencing from 1998 to 2002. In general for the Indus Basin the high flow period is

environment · water · infrastructure · geotechnics

generally April to July and the low flow period may extend from August to February. In the upper reaches of the Kabul, the high flow period generally is in April, May, and October to February.

2.3 Geology and Hydrogeology

Most of general geological and hydro geological information which is available at present in Afghanistan (see Figure 2-9) is based on the original data from Abdullah and Chmyriov (1977), regional and local information from Kabul and the Kabul River Basin is mainly gathered from older Russian sources from 1972 to 1982 as well as from German investigation results from the 1960s to 1976.

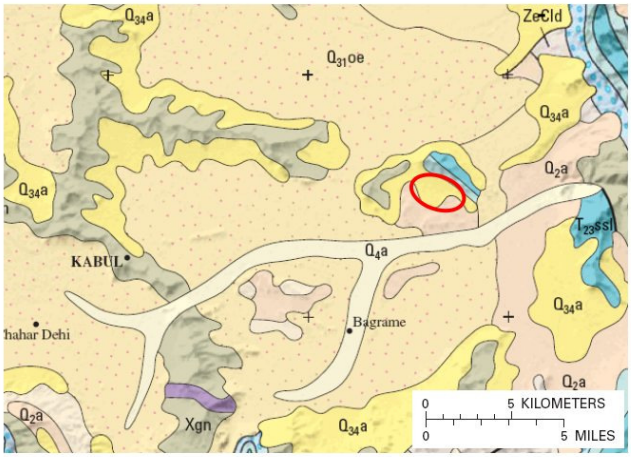

Investigation Area

Q_4a	**Conglomerate and sandstone (Holocene)**—Alluvium: shingly and detrital sediments, gravel, sand more abundant than silt and clay
$Q_{34}a$	**Conglomerate and sandstone (Late Pleistocene-Holocene)**—Alluvium: shingly and detrital sediments, gravel, sand more abundant than silt and clay
Q_3a	**Conglomerate and sandstone (Late Pleistocene)**—Alluvium: shingly and detrital sediments, gravel, sand more abundant than silt and clay
$Q_{31}oe$	**Loess (Late Pleistocene)**—Loess more abundant than sand, clay
Q_2a	**Conglomerate and sandstone (Middle Pleistocene)**—Alluvium: shingly and detrital sediments, gravel, sand more abundant than silt and clay
$T_{23}ssl$	**Sandstone and siltstone (Middle-Late Triassic)**—Sandstone and siltstone more abundant than mudstone, carbonaceous shale, limestone, marl, conglomerate, acid and mafic volcanic rocks (North Afghanistan); limestone, dolomite, marl (Kabul Massif and Kunar Tectonic Zone)
$T_{12}ld$	**Limestone and dolomite (Early-Middle Triassic)**—Limestone, dolomite, marl
Xgn	**Gneiss (Paleoproterozoic)**—Two-mica, biotite, biotite-amphibole, garnet-biotite, and plagioclase gneiss; migmatite, quartzite, marble amphibolite

Figure 2-9: Geology East of Kabul (USGS, 2005, 2006)

The Kabul Basin is located in the north-central part of the so called Kabul block and was formed by faulting of crystalline rocks and erosion. The basin is bordered by the following:

- highly faulted Proterozoic and Mesozoic crystalline rocks, and Paleozoic and Mesozoic sedimentary rocks on the west (Paghman Massif),
- Proterozoic and Paleogene crystalline rocks, Paleozoic sedimentary rocks, and Mesozoic (Triassic) rhyolitic lavas on the east and northeast (Kohi Safi mountain range),
- and late Paleozoic and Mesozoic (Triassic) sedimentary rocks and Cenozoic (Eocene) ultramafic intrusive rocks on the south.

The low hills within the Kabul Basin are comprised of Proterozoic gneiss and are surrounded by an apron of late Cenozoic (Pleistocene-Holocene) alluvial fan material (USGS 2005).

According to Myslil and others (1982) the initial development of graben structures began in the late Miocene, which coincides with the formation of the Kabul River valley. Following formation of these grabens was erosion of the surrounding upland areas and the filling of the developing basins with terrestrial and lacustrine sediments, mainly of Neogene age. Therefore the plains surrounding the mountain range and the valleys between the mountain ridges are filled with Neogene and Quaternary (Pleistocene) sediments, which are erosion products of the Mountains but also well rounded alluvial sediments including stones up to 40 cm diameter and more. The sediments are typically unlithified or partially lithified with individual hard cemented layers. Observation suggests that the Neogene sequences contain a generally lower proportion of coarse grained layers than the Pleistocene, and that they may generally be more compacted / lithified (NCAAP 2002). Along the Kabul River valley, recent alluvial deposits have occurred which are up to several tens of meters thick with extremely coarse-grained layers up to a maximum thickness of 15 m. The total thickness of the sediments filling the Kabul basin is estimated to be up to 600 m (BGR 2005).

The plains of the Kabul River basin are primarily occupied by quaternary deposits including alluvial fans, playas, and sand dunes with local clayey loess coverings with a thickness of up to several meters. The soils of the hills were formed from loess, which is derived from glacial and alluvial materials. Glacio-fluvial, alluvial and eolian sediments form the initial materials of soils in the major river valleys (NCAAP 2002).

According to HOMILIUS (in: BGR 2005) the stratigraphic classification of beds within the Kabul basin is as follows:

Series 5b	Youngest alluvial deposits	(coarse and fluvial gravel, pebbles, sand and reworked loess)
Series 5a	Youngest basin deposits	(reworked loess with sand and pebble lenses)
Series 4	Talus slopes, debris fans, from the basin margin	(gravel, pebbles, talus and reworked loess)
Series 3	Basin deposits	(reworked loess with sand and gravel, partially lithified – sandstone, conglomerate)
Series 2b	Mainly fluviatile sediments, localised channel-like distribution	(gravel, sand, reworked loess often partially lithified – sandstone, conglomerate)
Series 2a	Basin sediments	(largely loess with interbedded coarse gravel and sand)
Series 1	Older basin sediments	(marl, clay, siltstone, sandstone, conglomerate)

The basement comprises Precambrian metamorphics (gneisses, granite-gneiss, quartzite, amphibolite, mica, schist, marble) with some younger (upper Paleozoic, Mesozoic) limestones and marls in the south and east margins of the basins.

In general the basin fill can be divided into 2 facies groups:
- red-colored coarse molasse marginal facies sediments of Miocene age, and
- greenish fine-grained lacustrine basin facies sediments of Pliocene age

The latter seem to build the lower aquifer of the subbasin south of Gharib Ghar (see Figure 2-8 and Figure 2-9) which was explored in test well # 2.

The Neogene sediments were deposited to a base level higher than the level of the current plain and were then eroded by the river valleys or intermittent streams flowing downhill at times with heavy rainfall (subbasin south of Gharib Ghar). Within these valleys, the quaternary sediments were subsequently deposited.

The quaternary sediments contain the main aquifer horizons of the Kabul basin ("main" from the point of view of current use for drinking water and irrigation purposes).

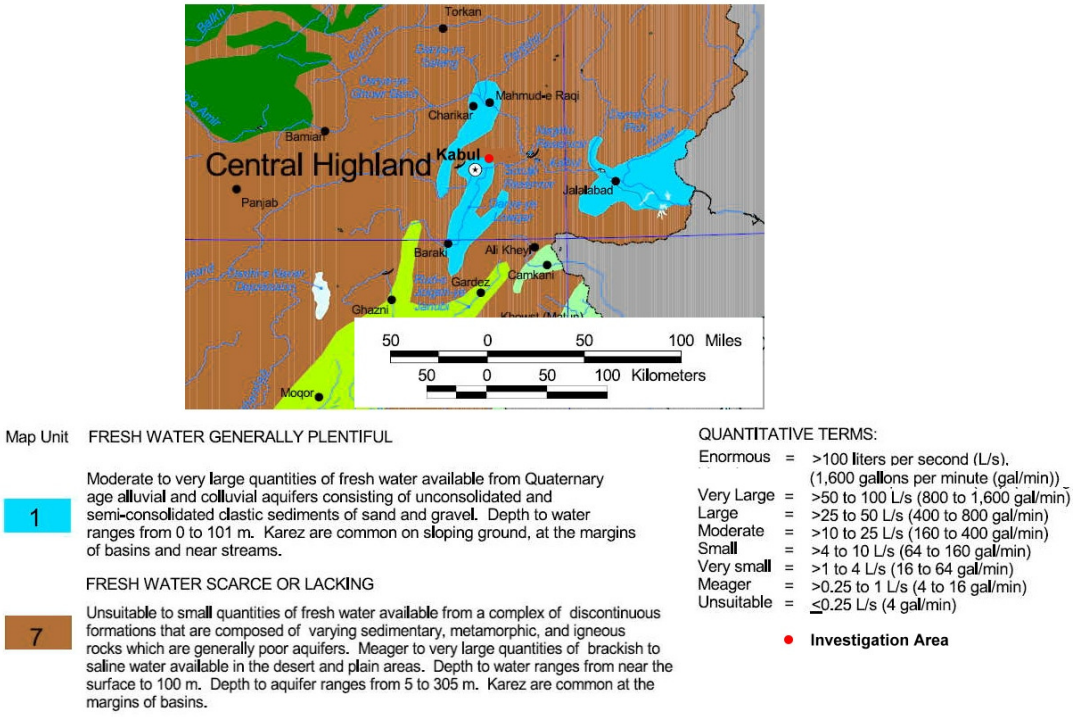

Figure 2-10: Location of the Investigation Area within the Larger Hydrogeological Structures (Yield) and in Relation to Kabul Basin Aquifers

There are four distinct (but presumably interconnected) groundwater basins, sometimes referred to as four main aquifers (BGR 2005), which generally consist of sandy-gravely deposits formed as river terraces:

- the upper course of the Kabul River
- the Paghman-Darulaman basin with two aquifers lying along of the course of the Paghman River
- the Logar Basin and
- the southern part of the Kabul basin following the course of the Logar River and the lower Kabul River,

The general groundwater flow direction is from west to east (the lower Kabul River).

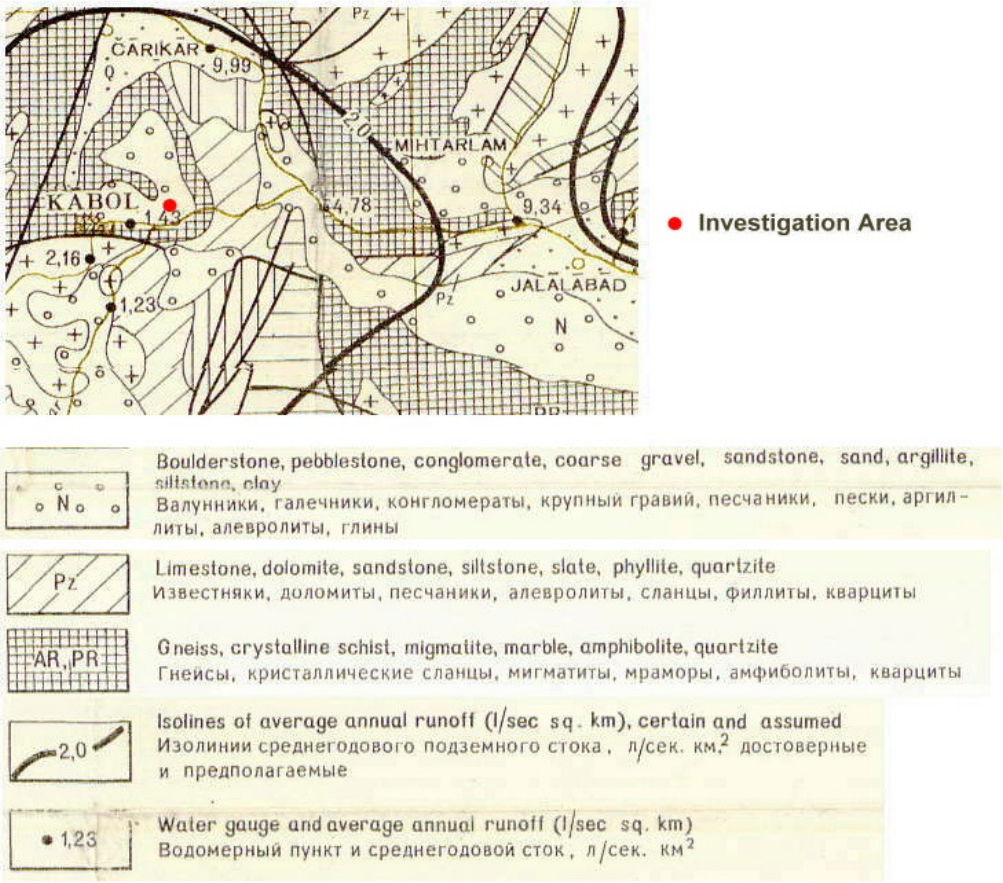

Figure 2-11: Location of the Investigation Area within the Larger Hydrogeological Structures (Lithology)

According to Homilius (in: BGR 2005), the main aquifers (groundwater horizons II and III) belong to series 2b and 3, at depths of some 15 to 40 m, but these only occur in limited areas. In series 4, 5a and 5b, a near-surface aquifer (groundwater horizon I) has developed, and it is this aquifer that is used intensively by the many shallow wells in Kabul City. In this upper aquifer, the direction of groundwater flow is typically towards the valley plains of Paghman, Kabul and Logar.

The aquifers mainly consist of gravel and sand beds which are partially cemented by secondary minerals. Locally the aquifers can reach a thickness of 80 m. Permeability varies between $2.3*10^{-5}$ m/s to $1.3*10^{-3}$ m/s, hydraulic conductivities are reported in the range of 9-40 m/d.

The Kabul aquifer is defined as a zone of coarse-grained deposits with a length of about 9 km and width of about 2.5 km parallel to the Kabul River. The Kabul aquifer consists of three horizons:

- cover rock consisting of loam with large pore spaces
- thin layer of sand and gravel below the cover rock and
- main part of the aquifer consisting of conglomerates and sandstones

The sandy loams of the cover rock can reach a thickness up to 17 meters and have a relatively high permeability of about $1.4*10^{-4}$ m/s to $6.1*10^{-4}$ m/s. The thickness of the sand and gravel layer varies from 2 to 9 m in the higher part of the plain and up to 20 m in the lower zones. The lowest conglomerate and sandstone layer has a thickness of 30 to 65 m and a permeability of about $0.5*10^{-4}$ m/s to $7.5*10^{-4}$ m/s. Whereas Quaternary alluvial sediments in the Kabul area composed of conglomerates, pebbles, and gravels are reported to have yields of 10-12 l/s. Similar boreholes in the typically finer grained Neogene sediments (siltstones, argillites, some coarse strata) are reported to yield only 5 l/s.

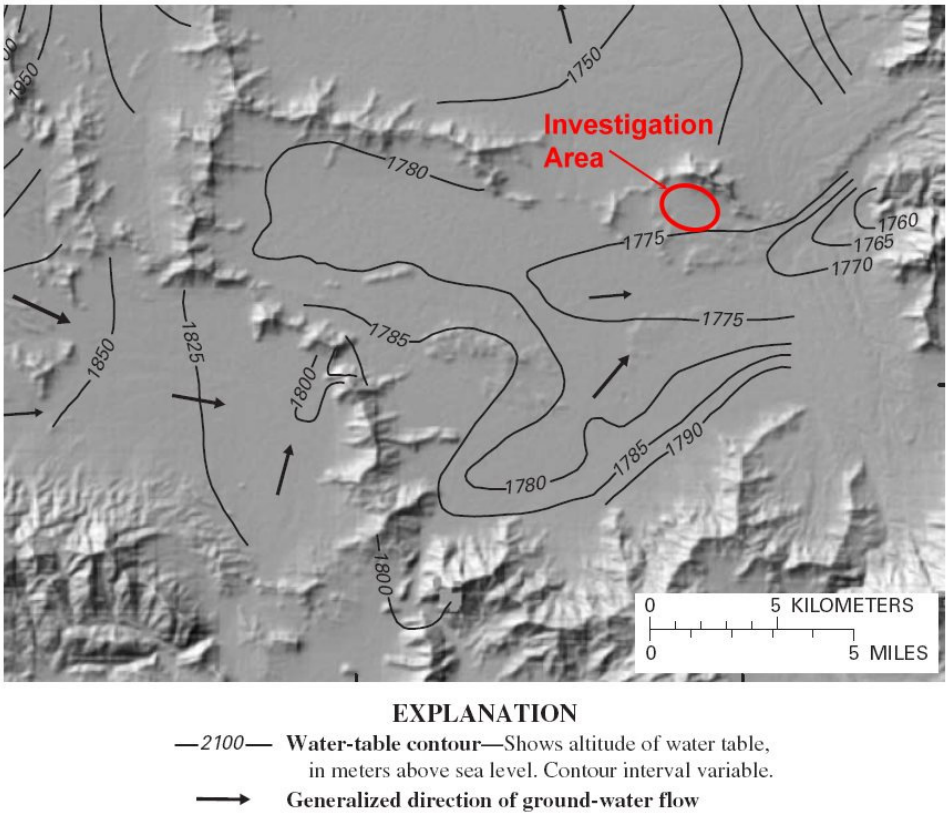

Figure 2-12: Water Table in the South-Eastern Part of the Kabul Basin, Nov. 2004 (USGS 2005)

environment · water · infrastructure · geotechnics

The different layers within the Kabul aquifer are considered to be interconnected and forms one aquifer. The aquifer as a whole is phreatic (BGR 2005).

In the north-eastern part of the Kabul aquifer a major gravel bed was identified (BGR 2005) which has a length of about 11 km, a width of up to 2 km and a thickness of 10 to 30 m. Productivity tests show very good values: 40 l/s discharge with only 1 m drawdown. It seems that the Camp Dogan well is getting water from this aquifer.

The annual fluctuation in the water table is 3-5 m in the upper Kabul basin and 2-2.5 m in the lower Kabul basin. As a result of strong extraction and droughts during recent years the water table of the Kabul aquifer dropped about 6 – 7 meters within the last 40 years (BGR 2005) and. about 5 to 6 m and to over 10 m in upslope areas since 1980 according to (USGS 2005).

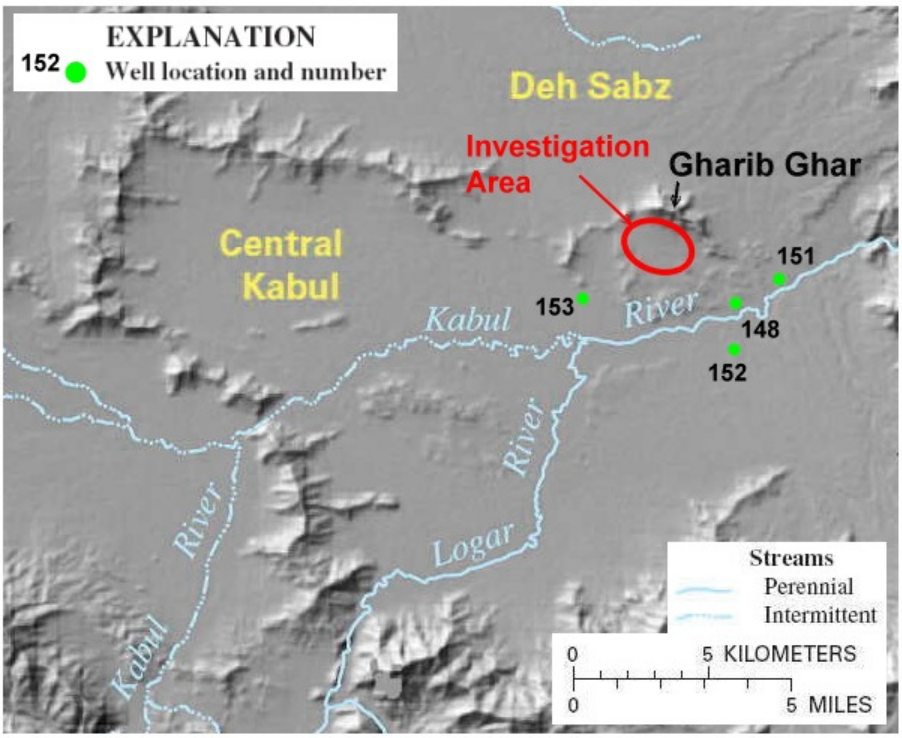

Figure 2-13: Drinking Water Wells in the Vicinity of the Investigation Area (USGS 2005)

Extensive investigations of groundwater quality were carried out in 2004 and documented in (BGR 2005) and (USGS 2005). From April to August 2004, 290 shallow and deep wells in the City of Kabul were investigated by BGR; 108 water samples were taken from 148 wells located throughout the whole Kabul basin by USGS.

Only four of the wells investigated are located nearby the investigation area (see Figure 2-13). All four of these wells are related to the Kabul River plain area. The elevation of the well heads is about 1780 m asl, the well depth varies between 20 m and 35 m (Wells 148, 151 and 152) and only Well 153 is about 160 m deep. The water of this well is highly mineralized (specific conductivity: 14,010 µS/cm) and obviously penetrates the higher mineralized Neogene sediments north of Jalalabad Road east of the airport. According to (Myslil 1982) chloride and sulphate concentrations increase down gradient until a depth of about 200 m below ground surface (bgs). Deeper groundwater is of suitable quality for domestic use.

Section 3
Site Descriptions

Location of the investigation area in relation to Kabul City and major geographical sites is described in Section 1.5. Discovered near the two new drilled test wells were three older wells at the former Russian military repair base: RW 1, RW 2 and RW 3 (see Figure 3-1.

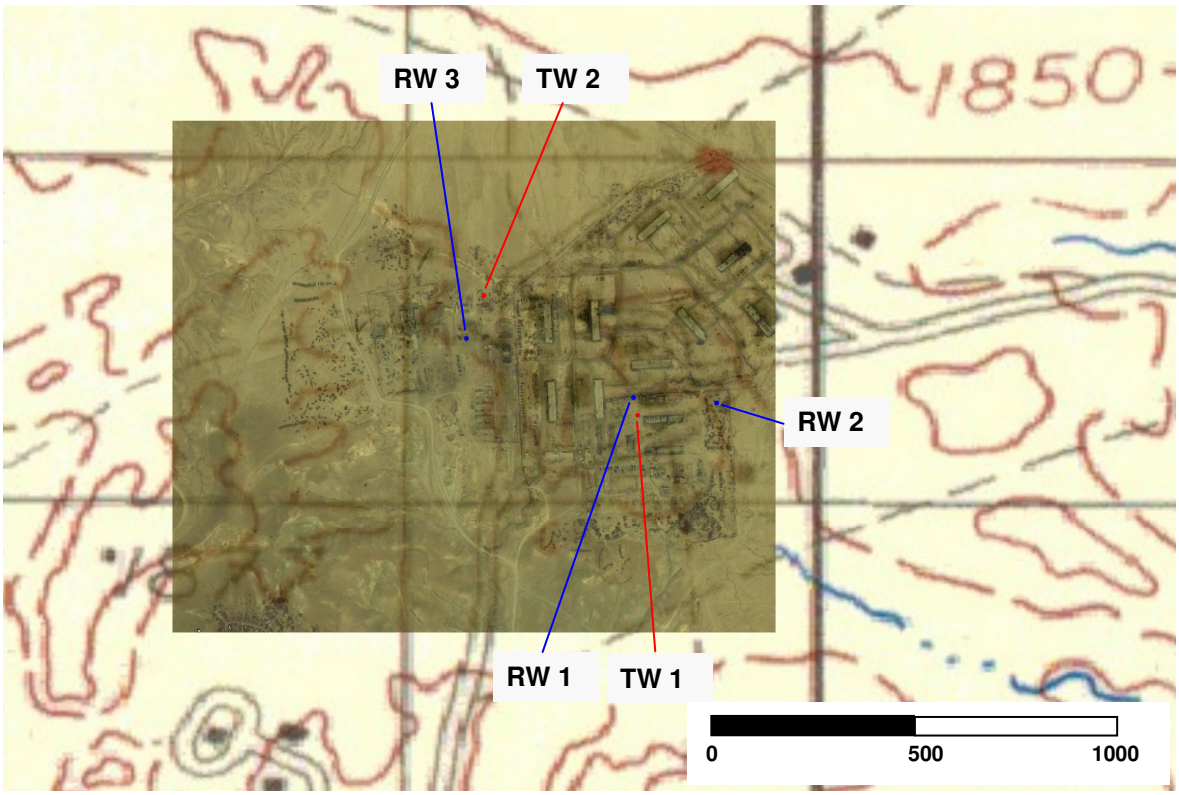

Figure 3-1: Location of Test Wells and Older Wells at the Former Russian Military Site (Topographical Background see Figure 1-1)

Site 1 is located about 500 m southeast of Site 2 in the central part of the former Russian military site (see Figure 3-2). Both site areas are flat, dry, and surrounded by truck wrecks (see Appendix 5). The reinforced slab near test well TW 1 (distance: 11.3 m) was used as reference elevation point as well as reference point for position measurement (northwest corner of the slab). For position measurement of test well TW 2 the northeast corner of the building on the possibly artificial hillock southeast of TW 2 was used (distance 55.9 m). The UTM coordinates for the slab and the building were generated from the IKONOS satellite image (BELLER 2006) and show good conformity with the coordinates measured by TDI using a handheld GPS (see Appendix 2).

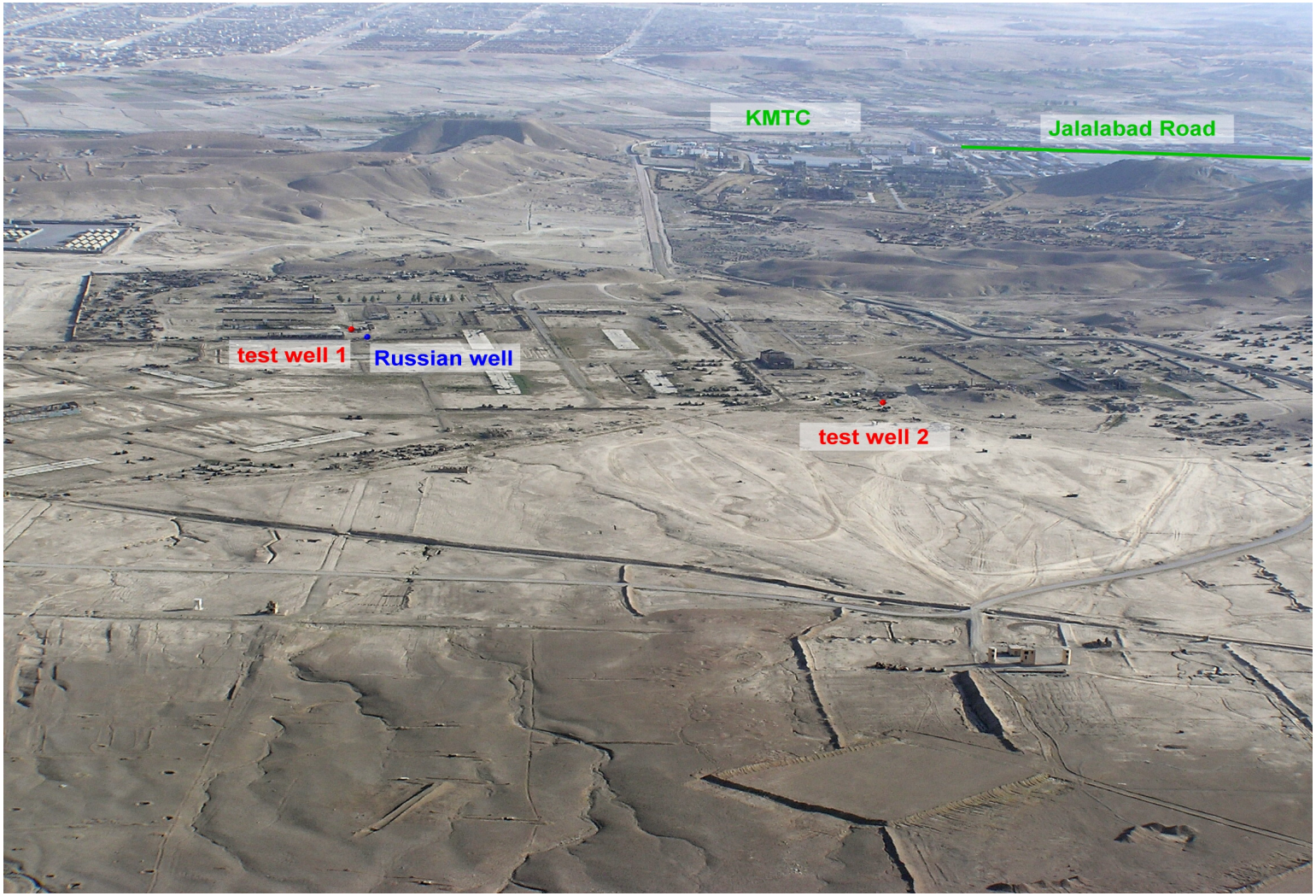

Figure 3-2: View from Gharib Ghar to the South. Showing the Main Part of the Investigation Area, KMTC and the Kabul River Plain South of Jalalabad Road

environment · water · infrastructure · geotechnics
CDM

Test well TW 1:	34.3339 °N 69.1921 °E
	UTM coordinates: x 52585.68 / y 3824394.74
	Elevation (ground level): 1,839.92 m asl
Test well TW 2:	34.3350 °N 69.1905 °E
	UTM coordinates: x 529188.79 / y 3824718.19
	Elevation (ground level): 1,842.02 m asl
Russian well RW 1:	34.3340 °N 69.1921 °E
	UTM coordinates: x 529578.33 / y 3824432.57
	Elevation (ground level): 1,839.70 m asl

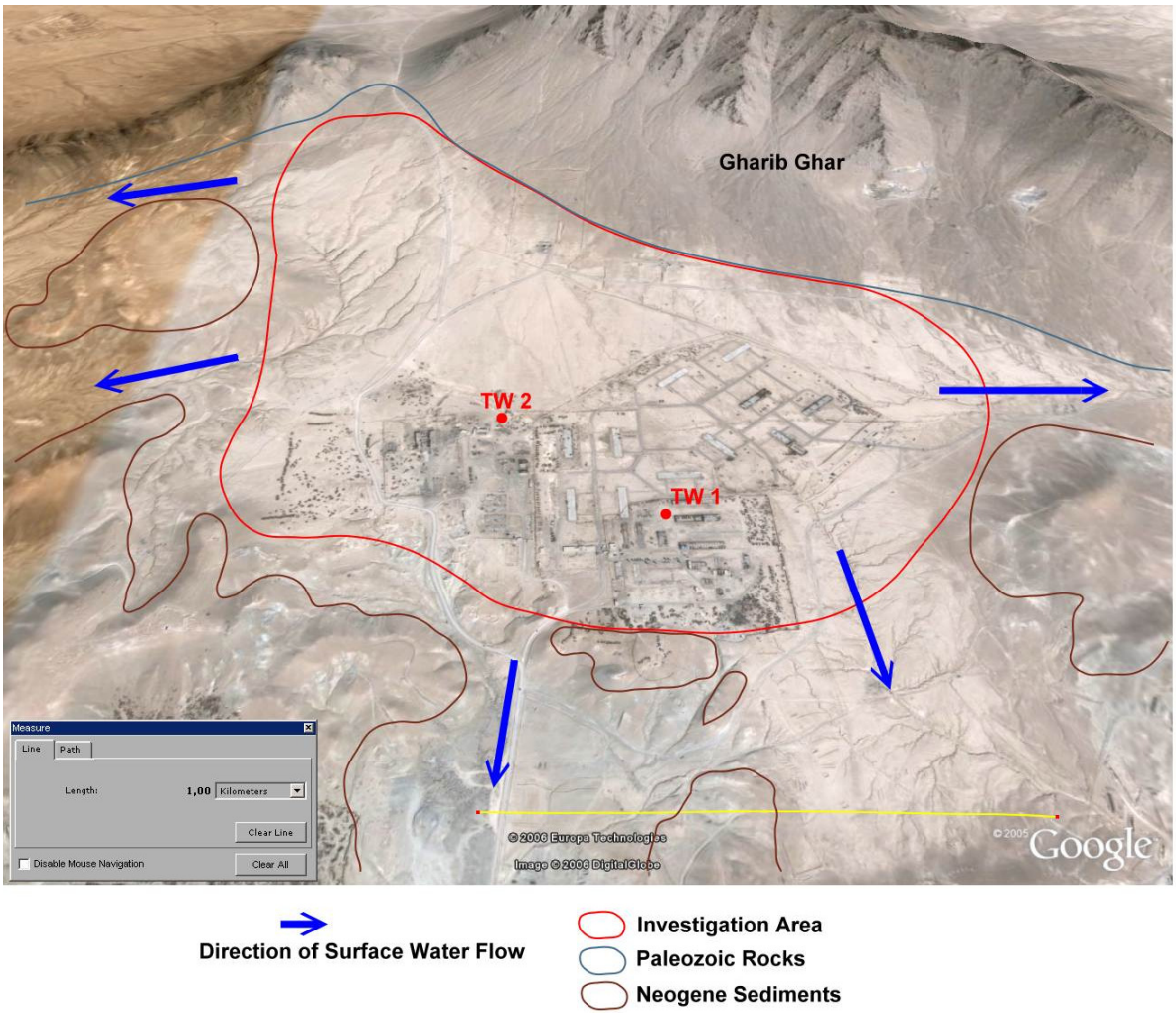

Figure 3-3: Location of the Investigation Area in Relation to Outcropping Neogene and Paleozoic Rocks. View to the North with Google Earth.

The investigation area comprises a plain area between Paleozoic rocks of the Gharib Ghar Mountain in the north and northeast and Neogene hillocks next to the southern border of the former Russian military site. The western and eastern borders of the area are formed by soft contoured hills of Neogene age (see Appendices 1.5 and 5). Situated between these hills are lowlands which function as discharge valleys during times of heavy rainfall (see Figure 3-3).

For both sites a UXO survey and manual battle area clearance was carried out (see Appendix 2). Both sites were highly contaminated with scrap metal and partly contaminated with reinforced concrete. The clearance depths for both sites varied between 13 cm (working areas and access track at Site # 1) and 6 m (actual drill sites).

About 1,450 m² were cleared for Site # 1 and about 750 m² for Site # 2. Although there was nothing found at the drill site areas, 2 mortar fuses and a fused HEFS projectile were found in the vicinity of Site # 2. All items were marked off and the find was reported to UNMACA. As of the time this report was written these items were still there; although the marking flags have disappeared.

Section 4
Work Methodology

4.1 Pre-Mobilization, Submittal Preparation

Pre-mobilization included preparation of Draft and Final versions of the WP, including a HASP as well as the preparation of Draft and Final versions of the UXO ASAP and the UXO CRP. These documents were submitted for approval prior to starting the project work in Afghanistan.

The Final Work Plan and the corresponding UXO Plans were approved by the USACE Afghanistan District, Kabul (AED) on 2 August 2006. According to the Work Plan, the final project CD-ROM will include the Final WP, the Final HASP, the Final UXO ASAP and UXO CRP.

4.2 Site reconnaissance and UXO survey and clearance

After evaluation of existing data (available information at USACE Headquarters Afghanistan, well descriptions from Camp Warehouse Base, verbal information from local hydro geologists) and examining real property issues, it was decided to establish both test wells at the KMTC Training area about 2 km northeast outside the KMTC footprint (see Meeting Notes # 2).

Prior to any site investigation the area was inspected by the demining team. A UXO anomaly survey and a manual battle area clearance were carried out by The Development Initiative (TDI) from 9 – 16 August 2006 (Site # 1) and 17 – 21 August 2006 (Site # 2). Because the investigation area is mainly located at a former military site a huge amount of scrap had to be removed.

The Mine/UXO Clearance reports for both sites are attached in Appendix 2; a brief description of the work carried out is provided in Section 3.

4.3 Well drilling and installation

According to the time schedule the drilling work and well installations were to be carried out consecutively by one drilling company (JEOSON Drilling). Because of undue delay from the beginning of the drilling work CDM contracted the second well to a different

drilling company. Bids were requested from two local companies. URB (United Rehabilitation Bureau) was commissioned on 6 September 2006 to drill the second well. By doing so, the scheduled start date for drilling test well 2 could be met.

In spite of considerable efforts significant delays occurred during the drilling work as well as during the well installations. This was partially caused by the antiquated drilling equipment used (JEOSON Drilling) and partially by the lack of appropriate/suitable material being available on the local market such as well screens with the required slot size, gravel in the required size and quality, and pelletized bentonite. Furthermore, it became obvious that the locally available drilling companies were not familiar with modern drilling and sampling methods and were not able to perform the required tasks up to Western Standards.

The final depth for each borehole was determined according to the lithology and finally approved by the client. In order to gather as much information as possible about the hydrodynamics of the local subbasin, it was decided to test the aquifers at two different depths. Basic data for both wells (bores) is summarized in Table 4-1. Both bores were drilled using rotary mud drilling technology, and equipped with approximately 6 "-PVC blank casing and screen.

Table 4-1: Basic Data of the Test Wells

Description	Unit	Test Well 1	Test Well 2
TOC, Protective Casing	m asl.	1,840.88	1,843.00
Land Surface Elevation, (Ground Surface, gs)	m asl.	1,839.92	1,842.02
TOC - gs	m	0.96	0.98
Well Depth	m	119.30	148.30
Bore Depth	m	121.00	155.00
Inner Well Diameter	cm	15.875	15.875
Outer Well Diameter	cm	17.4625	17.4625
Bore Diameter	cm	37.1475	35.56
Top of Screen (TOS) *	m bgs	55.00	104.00
Screen Bottom *	m bgs	115.00	144.00
Total Length of Screen	m	44.00	32.00
Well Bottom	m bgs	119.30	148.30
Length of the Sump	m	4.00	4.00
Static Water Level**	m bgs	42.82	44.16
Static Water Level**	m asl.	1,797.10	1,797.86

* Related to total length of screen
** Measured before Step Drawdown Test, Water Level was minor influenced by Well Development

The elevation of the Russian well RW 1 (TOC) was measured to 1,840.47 m asl, the elevation of the ground surface outside the small well house is about 1,829.70 m asl. Further data related to the bores and wells is provided in Appendix 3.

During drilling soil samples were taken from each meter of the cutting to enable geological logging. The geological logs are shown in Appendix 3. Below the static water table a larger number of soil samples were taken from sandy soils. These samples were used for soil sieve analyses (see Section 4.7).

Geophysical borehole measurement (Gamma logging) was already performed (tested) during the drilling work. After achieving the final depth of each well, geophysical logging was done in accordance with the WP.

The final well design was based on the geophysical logging data and with consideration of the depths and petrology of the soil samples taken (see Table 4-1 and Appendix 3). Screens with a larger total length divided by blank casings were installed in the aquiclude/aquitard horizons as the generally fine grained aquifers are divided by layers with lower permeability (silt/clay) (see Appendix 3).

The chronological order of the drilling work, well installations, and pump tests is shown in Table 4-2. Stand-by time is included in each single task.

Table 4-2: Chronological order of drilling work and well installation

Single Task	Timeframe	
	Test Well 1	**Test Well 2**
Drilling of the Bore incl. Soil Sampling	23 Aug. – 13 Sept.	09 – 14 Sept.
Geophysical Logging	14 Sept.	15 Sept.
Well Installation	18 Sept. – 02 Oct.	19 Sept. – 04 Oct.
Well Development	05 – 07 Oct.	06 – 07 Oct.
Pump Tests incl. Disinfection and Water Sampling	10 – 13 Oct.	08 – 11 Oct.
Well Protection, Site Clearance	16 - 17 Oct.	14 - 15 Oct.

For both wells, 6 ¼ inch (inner diameter) screen pipes with 2 mm horizontal slots were used, as was a 2-4 mm quartz-feldspar-slate mixed gravel pack. Steel centralizers were placed about every 8 m (every second pipe). The gravel pack was placed using a compressor for water circulation with air bubbles. In doing so bridging can be prevented and sedimentation of the gravel as a "dense package" is possible. This was especially important in view of the compromises which had to be made on larger sized screen slots and poor quality gravel.

For well development the drilling truck's 17 bar compressor was used in TW 1 and a submersible water pump in TW 2. In both cases a volume larger than the added water used for drillings was pumped out. The content of sediment in the pumped water decreased rapidly after about 6 hours of pumping and about 30 hours after using the compressor in TW 1. The length of time it took for the water to clear was likely due to the extended drilling time, the resulting thick filter cake, and the method used for well development (compressor only).

4.4 Capacity Testing

In both wells a three step drawdown test was carried out. Unfortunately due to technical reasons [1] no logging probe (data logger) could be used and all measurements had to be done using electric water-level tapes. The measurement results are included in Appendix 4.1 and the interpretation of the data follows in Section 5.2.

The pumping rates for the step drawdown tests were estimated according to the drawdown reached during well development and submitted for approval to the client (see Meeting Notes # 3). Based on the results gathered from the step drawdown tests the discharge rates for the continuous 24 hours pump tests were defined.

---

[1] The inner diameter of the test wells (PVC well screen / blank casing) is 6.25 inches (15.875 cm); the outer diameter of the 3"-steel casing connected to the submersible pump was 8.89 cm. The outer diameter of the sleeves for the pump casing was about 10.8 cm so that the maximum free space inside the well casing was about 5 cm. Due to the relatively large diameter of the logging probe (3.55 cm), the associated electrical cable, and an emergency rope for the pump it was not possible to lower the probe to the necessary depth.

During the pump phases as well as during the subsequent recovery the water level was measured in the pump well and in the monitoring well RW 1 at Site # 1. According to German standards the recovery of the water table was at a minimum measured until 80% of the total drawdown was complete.

Because of the tight time schedule the disinfection of the wells after the step drawdown tests had to be adapted. After well development the depth of the pump for the pump tests was defined for each well. The position of each pump remained unchanged until completion of the recovery measurement. In doing so, all equipment (pump, pump pipes and well casing) and the annular space of the well had to be disinfected by use of hypochlorite. According to the SOS a chlorine concentration of about 1 ‰ was generated. The solution was mixed using step by step pumping within 2 hours. After the solution remained for about 6 hours in the well, a minimum of quintuple the amount of the well volume was pumped out. After waiting overnight for the recovery of the water table, the continuous pump test was started on the morning of the following day.

The water samples were taken during the continuous pump test (see Section 4.6).

4.5 Geophysical Logging

According to the Work Plan prior to installing the well screen and casing, electrical logging had to be performed in each borehole. Unfortunately one week before project mobilization the responsible engineer (from a subcontractor) was killed in a helicopter crash and the logging equipment was shipped back to the home office. Therefore prior to starting the drilling work, a replacement for geophysical logging had to be located. Both CDM and USACE tried to identify a qualified company or sophisticated geophysical borehole logging equipment in Afghanistan without success.

Fortunately mobile gamma logging equipment could be ordered from Germany and the drilling work at Site # 1 started with only one week delay. Before using the gamma logging equipment for the final measurement, two test measurements were carried out in TW 1 and the monitoring well RW 1. Here the advantage of this method is evident: the gamma ray level of K-40 can be measured even in wells with steel casing.

Despite the difficulty in interpreting stand-alone gamma measurements in fine sand, silty clayey sand, sandy silt, and sandy clay, the definition of the screen areas would not have been possible without the logging results. As oppoased to electrical logging methods, gamma measurement is also possible above the water level. Therefore using gamma measurments it was possible to get a correlation between the near surface geological

strata. The logging data were exported to MS Excel and included in Appendix 3.2 as printed graphs.

4.6 Water Quality Sampling and Analysis

As already described in Section 4.3 water samples for chemical, bacteriological and isotope analyses were collected during the final stage of the continuous pump tests. Water samples taken during a pump test, especially during the final stage, are very likely representative of the aquifer water quality. Furthermore, samples for isotope analyses should be taken after a longer pumping time.

Table 4-3: Compilation of Water Samples and Parameter for Analyses

Parameter	TW 1	TW 2	Reference Sample (TW 2)	RW 1
Field Parameters: pH, salinity, conductivity, color, odor	x	x	x	x
Cations: Na, K, Mg, Ca	x	x	x	
Anions: Chloride, Sulfate, Nitrate Carbonate, Bicarbonate,	x	x	x	
TDS	x	x	x	
Heavy Metals : Pb, Cr, Cd, Hg, Ni, Cu, As, Zn	x	x	x	
TPH	x	x	x	x
Bacteriological Analysis: Total coli form, Fecal coli form, E Coli	x	x	x	
Isotopes: Tritium, Helium	x	x		

In total three water samples (one from each well and one Quality Assurance (QA) reference sample) were taken during the pump tests and one bailing sample from the Old Russian well RW 1. In Table 4-3 a compilation of water quality sampling and analysis results according to the SOS is provided. As the isotope analyses are not included in the SOS, the results of these analyses as well as the interpretation are included in a separate appendix to this study (Appendix 4.5). Additionally, due to the length of time required to perform the isotope analyses, the stand alone report will be delivered at a later date than this report.

Earlier on 12 August 2006, in relation to the definition of drill locations, a bailing sample was taken from the Old Russian well RW 1 and analyzed in the Labs of the Ministry of Health. Results of all quality analyses for this sample are listed in Appendix 4.4.

Contrary to former statements most of the chemical parameters could not be analyzed by the local laboratory at the Environmental Health Department of the Ministry of Health (MoH) in Kabul, Afghanistan. Therefore all water samples, excluding samples for bacteriological analyses, were sent to Germany for analysis. The following laboratories were used:

Field parameters:	measured by CDM during sampling
Cations, anions, TDS, heavy metals, TPH:	SGS INSTITUT FRESENIUS GmbH Im Maisel 14 65232 Taunusstein, Germany
Bacteriological Analysis:	VICC Laboratories Street 15, Lane 2, House 54 Wazir Akbar Khan Kabul, Afghanistan
Isotopes, Helium:	Institute of Environmental Physics/ Oceanography University of Bremen Otto Hahn Allee 28359 Bremen, Germany
Isotopes, Tritium:	SGS INSTITUT FRESENIUS GmbH Im Maisel 14 65232 Taunusstein, Germany

4.7 Sieve Analysis

As already stated in Section 4.3 soil samples were collected from each drilling meter. According to the SOS soil samples for sieve analyses were to be taken from drill cuttings that directly correlate to potential water bearing zones or the proposed screened interval. Because of the almost complete absence of gravel and coarse sand it was very difficult to define potential water bearing zones directly based on samples from cuttings. Therefore as a first step soil samples for sieve analyses were collected from each layer with an estimated sand content larger 30%. After recognizing major changes in lithology, as a second step samples of similar petrology were combined into a mixed sample.

In total 24 soil samples were analyzed, 12 per drilled well. The corresponding data sheets are presented in Appendix 4.3.

Section 5
Investigation Results

This section summarizes the results of the geological and geophysical logging, the pump tests and the water quality analyses.

5.1 Local Geology and Hydrogeology

Prior to the definition of the drilling locations the Hydro geological Department of the Geological Survey within the Ministry of Mines and Energy was asked to advise CDM regarding the best possible locations for the test wells. Thereupon a short report was furnished (YOSUF & GULAGHA, see Appendix 4.6). Unfortunately the report includes neither a description of the local (hydro-) geological situation of the investigation area nor answers to possible discharge and water quality. The report only repeated the well known facts that groundwater north of Jalalabad Road is expected to be highly mineralized and that a good yield can be expected from the quaternary aquifer near Kabul River.

The geological description is based on soil samples taken from cuttings of rotary-mud drilling. Therefore the lithology described in the geological logs will be slightly different from actual conditions. Also, the actual depth of the layers can differ up to several meters, especially at lower depths (below 80 m bgs).

According to the gamma log graph (Appendix 3.2) sandy material was flushed out of the borehole more than four meters after the related sandy horizon was passed. Because of this the locations of the filter areas were defined in accordance to gamma log results.

The following lithology can be presented for the central part of the subbasin south of Gharib Ghar:

10…13 m thickness	Quaternary: loess, brown-light brown with sandy layers up to several meters; dry
95…112 m thickness	Quaternary: reworked loess and Pliocene sediments, mostly grey, lower 20 m brown to grayish brown, sandy (fine sand) layers up to several meters; saturated below 45 m bgs but perched aquifers below 35 m bgs possible

> 40 m thickness	Neogene: Pliocene fine sands, partly medium sand, silt and silty clay, greenish grey, greenish brown, in the upper part mostly grey; saturated

Because rotary drilling technology was used cemented layers could not be identified; therefore, the presence of sandstones, siltstones and claystones is possible. Larger grains, gathered from soil samples bared resemblance to argillite and alevrolite.

The soil sieve samples taken from potential aquifer zones show well sorted sand, mainly well sorted fine and medium sand (see Appendix 4.3). According to accepted practices the slot size should equal the 40th percentile point on the grain-size distribution chart (see Appendices 4.3.1 and 4.3.2, and taking into account the tradeoff between maximum yield and sediment-free water, the screen size for production wells should be between 0.25 and 0.5 mm.

Whereas in Well TW 1 the graph of the water temperature does not show any conspicuous differences, the graph of the water temperature in TW 2 indicates two changes at about 42 m bgs and 79 m bgs. According to the driller's report the first groundwater table (of a perched aquifer) was reached at a depth of about 35 m bgs. Because of the warmer muddy fluid in the borehole, the draining of the colder groundwater from the perched aquifer mixing with the fluid in the borehole is visible with gamma measurement. The sudden decrease of the temperature at 79 m bgs is caused by inflow of groundwater from this saturated zone. The graphs of the conductivity which was measured during gamma logging confirm the inflow of groundwater at these depths. Furthermore, the graphs of the conductivity show additional inflows at about 96 m bgs in TW 1 and at about 106 m bgs and 129 m bgs in TW 2.

According to the leveling results the water table of the confined aquifer is at a depth of about 1,797 m asl, see Table 4-1. This is about 20 m higher than the estimated depth of the groundwater level for the Kabul basin and underlines the presence of an isolated subbasin.

5.2 Capacity and Pump Testing

Data sheets of the measured drawdown, recovery and flow rates as well as the evaluation graphs are included in Appendix 4.1 and 4.2. The values of the hydraulic parameters were calculated using the HydroTec Software (V. 4.5.0.3).

The calculation results are very similar for both wells, refer to Table 5-1.

Table 5-1: Basic Aquifer Parameters

Parameter	TW 1	TW 2
Transmissivity	2.02 … 2.15 $*10^{-4}$ m^2/s	4.20 … 8.93 $*10^{-5}$ m^2/s
Hydraulic conductivity	k_f=4.48 …4.78 * 10^{-6} m/s	k_f=1.2…2.55 * 10^{-6} m/s
Storage coefficient (storativity)	s=6.62*10^{-4}	

The calculated hydraulic parameters are according to the lithology of the basin sediments but, contrary to the expectations, Test Well TW 1 shows a higher hydraulic conductivity then Test Well TW 2. The storage coefficient was only calculated for the test occurring at TW-1 because the test at TW-1 was the only one with a suitable observation well nearby.

The well loss/efficiency was calculated using the Hantush/Bierschenk method for determination of B and C and the Kruseman and deRidder equation for estimation of well efficiency.

The equation for well efficiency (Lp) is:

$$Lp = \frac{BQ}{BQ + CQ^2} * 100$$

Where:
Q = pumping rate (m^3/day),
BQ = aquifer (linear) well loss
CQ^2 = well (turbulent) well-loss

The non-laminar flow is generally associated with well loss, however, some of the non-laminar flow could be occurring in the formation adjacent to the wells. The efficiency of the wells ranged from 93% to 71% (Table 5-2).

Table 5-2: Well Efficiency

Well	Q (m^3/d)	Efficiency (%)
TW 1	60,48	93
	103,68	89
	172,80	83
TW 2	172,80	82
	250,56	76
	311,04	71

As shown in Table 5-2 the well efficiency drops significantly with an increase of discharge. A higher discharge could be reached when the screen area covers all available aquifer

zones. In this case (assuming a proper well installation [quartz/silica sand, well rounded and of uniform grain size]) a sustainable well production of about 400 to 430 m^3/d (about 5 l/s) would seem to be possible, even for 3 wells with a minimum distance of 500 m from each other.

But this theoretically possible yield is limited by the basin boundaries. Based on the estimated geometry of the subbasin as a V-shaped valley, an estimated slope of the basin of about 30 °, an estimated total thickness of the aquifers of about 50 m, and the available porosity of about 20 % (medium sand) a total volume of about 8 million cubic meters should be available. If the daily consumption would be about 15 l/s (3 wells @ 5l/s each), the basin would be pumped dry within 17 years because of little to no local groundwater recharge in this area (see Section 2.2).

Because of this lack of groundwater recharge any permanent ground water extraction will lead to a drawdown of the groundwater table and to a reduction of maximum yield. Nevertheless, a temporary groundwater extraction seems to be possible even from the point of view of environmental sustainability. In this case the maximum daily yield should not exceed 340,000 gpd (about 15 l/s) for the whole subbasin, with a maximum pumping time of 45 days/yr.

5.3 Water Quality Analyses

The results of the chemical and bacteriological water analyses are shown in Table 5-3 and Table 5-4. Groundwater quality of both water samples from the test wells – except for conductivity (see Table 5-4) – meets water quality standards for drinking water both according to US Environmental Protection Agency and European Union (98/83/EEC) regulations. In compliance with the "Council Directive relating to the quality of water intended for human consumption" (98/83/EEC) for the parameter electrical conductivity no maximum admissible concentration is defined (see footnote #3 to Table 5-4) and value of conductivity should be judged corresponding to the mineralization of water. The EPA does not specify maximum values for conductivity.

It is apparent by comparing the analytical results of both water samples that the groundwater of the upper aquifer(s) explored in Test Well TW 1 is significant more mineralized than the groundwater of the lower aquifer(s) explored in Test Well TW 2. This could indicate that Test Well TW 2 explores the aquifers of the lower Neogene sediments (see Section 2.3) which represent the basement bed of the subbasin.

In general the tested water quality corresponds to the groundwater quality of the larger Kabul River Basin (BGR 2005, USGS 2005). This also refers to the relatively high groundwater temperature (about 20°C) that is not yet adequately explained (BGR 2005).

Table 5-3: Results of Water Quality Analyses (Field Parameters)

Parameter	TW 1	TW 2	RW1	Date
Temperature, °C	20.2	20.3	23.1 17.2	08.08.2006 11.10.2006 13.10.2006
pH	7,8	8.08	7.8 7.6	08.08.2006 12.08.2006 11.10.2006 13.10.2006
Conductivity, µS/cm	904	560	684 674 648	08.08.2006 12.08.2006 11.10.2006 13.10.2006
Specific Conductivity, at 25°C, µS/cm	986	601	710	08.08.2006 11.10.2006 13.10.2006
Salinity, mg/l	500	300	300	08.08.2006 11.10.2006 13.10.2006
Color	non	non	yellowish	08.08.2006 11.10.2006 13.10.2006
Odor	non	non	fusty	08.08.2006 11.10.20061 3.10.2006
Turbidity	non	non	turbidly	08.08.2006 11.10.20061 3.10.2006

For the purpose of comparison the groundwater quality of the existing old Russian well RW 1 was tested with a reduced analytical program (see Table 5-5). Due to the water samples being taken using a bailer, some parameters such as turbidity and bacteriology do not represent the groundwater quality of the aquifer. The bottom of this well is silted up to 58 m bgs and the actual depth of the well is unknown. Because both the parameters conductivity and TDS are more similar to the groundwater quality of TW 2 then of TW 1 it is highly probable the old well explored mainly the lower aquifers below 110 m bgs.

Because of the former use of the investigation area as a military repair base the environmental parameter total petrol hydrocarbons (TPH) was included in the analytical

program. No TPHs were detected either in the ground water of the test wells or in the bailed sample of the old Russian well.

Table 5-4: Results of Water Quality Analyses and Maximum Contaminant Levels for Public Water Supplies According to EPA and European Union

Parameter	Unit	TW 2	TW 1	EPA	98/83/EG
Color		colorless, clear	colorless, clear		
Odor		non	non		
pH-Wert		8.1	8.2	6.5-8.5 [2)]	6,5 ≤ pH ≤8,5
Conductivity at 25° C	µS/cm	**657**	**1030**	- [4)]	400 [3)]
KMnO4-consumption	mg/l	0.8	1.1	--	--
Oxidization potential as oxygen consumption	mg/l	0.2	0.28	--	--
Chloride	mg/l	91.7	202	250 [2)]	200
Sulfate	mg/l	98	133	250 [2)]	250
Nitrate	mg/l	< 0.5	< 0.5	10 [1)]	50
Acid capacity to pH 4.3	mmol/l	1.71	1,76	- [4)]	--
Acid capacity to pH 8.2	mmol/l	< 0.05	< 0.05	- [4)]	--
Bicarbonate	mg/l	104	107	--	--
Carbonate	mg/l	< 3.0	< 3.0	--	--
Evaporation residue at 180 °C	mg/l	370	550	500 [2) 7)]	1,500
Arsenic	mg/l	0.001	0.005	0.05 [1)]	0.05
Lead	mg/l	< 0.001	< 0.001	0.015	0.05
Cadmium	mg/l	< 0.0005	< 0.0005	0.005 [1)]	0.005
Calcium	mg/l	17.3	32.6	- [6)]	100
Chrome	mg/l	< 0.005	< 0.005	0.1 [1)]	0.05
Potassium	mg/l	1.8	3.2	- [6)]	10
Copper	mg/l	< 0.005	< 0.005	1 [1)]	0.1
Magnesium	mg/l	6.23	21.6	- [6)]	30
Sodium	mg/l	75.5	81.2	250 [2)]	150
Nickel	mg/l	0.003	0.003	0.1 [1)]	0.05
Mercury	mg/l	< 0.0002	< 0.0002	0.002 [1)]	0.001
Zink	mg/l	0.01	0.09	5 [2)]	0.1
TPH	mg/l	< 0.1	< 0.1	--	0.01
Total coli form, ,	colonies	0	0	0	0
Fecal coli form	colonies	0	0	0	0
E Coli	colonies	0	0	0	0

[1] MCL - U.S. EPA Maximum contaminant level for public water supplies
[2] SMCL - U.S. EPA Secondary maximum contaminant level for public water supplies
[3] at 20°C, Guide level
[4] EPA max = not specified
[5] EPA advisory limit
[6] EPA max = no limit
[7] Total dissolved solids (TDS) reported as equivalent to weight of evaporation residue
-- No standard available or not applicable

Table 5-5: Results of Water Quality Analyses of RW 1 (bailed sample)

Parameter	Unit	RW 1
Color		normal
Odor		normal
Turbidity	NTU	120
Conductivity	µS/cm	597
Salinity	mg/l	300
pH-Wert		7.8
Chloride	mg/l	100
Sulfate	mg/l	0
Nitrite	mg/l	0.032
Hydrogen Sulfide	mg/l	0
Fluoride	mg/l	0.24
Hardness as CaCO3	mg/l	100
TDS	mg/l	285
Free Chlorine	mg/l	0
Residual Chlorine	mg/l	0
TPH	mg/l	< 0.1
Escherichia Coli	Colonies	5

Section 6
Conclusions and Recommendations

According to the investigation results of the pump tests and taking into account local geomorphology and hydrology the investigation area is not suited for a steady and sustainable supply of moderate to large amounts of drinking water.

Nevertheless, the groundwater is of good quality and no purification will be needed (excluding possible retention of a very low quantity of suspended solids). Therefore the groundwater reservoir can be used as a temporary secondary source in case of accidents or damage to the main reservoir/ distribution pipeline.

The following recommendations can be made (not in order of importance):

- If production wells will be drilled within the investigation area it is recommended to drill a maximum of three (3) wells with a distance of about 600 m from each other. One well should be located near Test Well TW 1, the other two wells should be located northwest and east-northeast from this well.
- The well depth will be in the range of about 150 m with a well diameter (screen pipe) of DN 175 (inner diameter) because of maintenance reasons. The diameter of the borehole should be not less than 16 inches.
- The theoretical screen size should be between 0.25 and 0.5 mm. DN 175 PVC-pipes are available with a slot size of 0.5 mm (8.5 mm wall thickness) and 0.75 mm (11.5 mm wall thickness). Therefore a quartz sand/gravel pack of 0.6-1.2 mm / 1.0-2.0 mm grain size will be required.
- When using rotary mud drilling, the use of geophysical borehole logging is indispensable. In the case of exploring fine-grained aquifers the use of both electrical and gamma logging is highly recommended.
- Production wells with a much higher discharge (more than 15 l/s) should be drilled south of Jalalabad Road close to the Kabul River. It must be noted that even this at present very productive area might decline in the future due to overuse.
- According to the hydro geological knowledge available at present and taking into consideration actual and estimated future (ground)water use in a steadily expanding Kabul City, exploration of the deeper (>200 meters) aquifers seems to be the only solution for a sustainable and environmentally friendly water supply that provides the necessary quantity and quality.

Section 7
References

Abdullah, Sh., Chmyriov, V.M., 1977: Hydrogeological Map of Afghanistan, Scale 1:2,000,000, in: Geology and Mineral Resources of Afghanistan. Annex 7 to Book 2, 1977

AIMS, 2006: USDMSA Topographic Maps, Source: USAID, 1968-86, Map scale 1:100,000, CD: 11 of 15, Afghanistan

BELLER 2006: Ikonos Satellite Images from Kabul

BGR, 2005: Geology and Hydrogeology of the Kabul Basin, prepared by Tünnermeier, T. and Houben, G., BGR 31 August 2005, 46 p.

CDM, 2006: Water Supply Study, Final Work Plan, Kabul Military Training Center Kabul, Afghanistan, CDM 01 August 2006.

CGIAR/IWMI, 2002: Current Drought Situation in Afghanistan, Afghanistan, August 2002

NCAAP, 2002: Guidelines for Sustainable Use of Groundwater in Afghanistan, Policy Document, prepared by Banks, D., Norwegian Church Aid, 17 April 2002

Myslil, V., Naim Eqrar, M., 1982: Hydrogeology of the Kabul Basin, Report, unpublished (Russ.)

Ray of Hope, 2003: Literature Review on Afghanistan's Water Resources, www.developmentgateway.org

USACE, 2002: Water Resources - Areal Appraisal of Afghanistan, U.S. Army Engineer Research and Development Center, Topographic Engineering Center, Alexandria, January 2002.

USACE, 2006: Satellite Image of Kabul, Ortho-UTM, Photographed 2004-08-20

USGS, 2005: Inventory of Ground-Water Resources in the Kabul Basin, Afghanistan, Broshears, R.E. et al., USGS Scientific Investigations Report 2005-5090, 34 p.

USGS, 2006: Geologic and Mineral Resource Map of Afghanistan, compiled by Doebrich J.L. and Wahl R.R., USGS 2006, Version 1, Scale 1.1 850 000

Yosuf, A., Gulagha 2006: Hydrogeological Investigation in Pule Chakhi Area for ANA 2006, Report, unpublished, Kabul, August 2006, 3 pages

Attachment C

Test Well Design

KMTC

CDM

TEST WELL

WELL DETAIL: TW-1

Client: USACE
Project Location: Kabul

Project Name: KMTC
Project Number: 7503-17

Drilling Contractor: JEOSON
Drilling Method/Rig: MUD Rotary
Drillers:
Drilling Date: Sep-05-06
Borehole Coordinates:
N: UTM:Y3824375.78 E: UTM:X529653.95
Development Date: Oct/07/2006

Surface Elevation (m): 0
Total Depth (m): 119.5
Depth to Initial Water Level (m. BGS):
Abandoment Method:
Field Screening Instrument:
Logged By: BERND BRAEUTIGAM
Top of Riser Elevation(m.): 0

Sample Type	Sample Number	Field Instrument Reading (ppm)	Depth of Casing Below Ground Surface	Sample Recovery	Stratum Designation	Material Description	Graphic Log	Elev -------- Depth (m.)	Well Construction Detail
						Ground Surface			
DS	1					**sandy silty CLAY** None cementation medium plasticity light brown dry poor gradation		0.0	
DS	2								
DS	3								
DS	4					**clayey silty SAND** None cementation none plasticity light brown greenish dry poor gradation		3.0	
DS	5								
DS	6								
DS	7					**sandy clayey SILT** Medium plasticity none cementation subangular greenish light brown dry poor gradation		6.0	
DS	8								
DS	9								
DS	10								
DS	11					**clayey SILT** None cementation none plasticity gray dry poor gradation		10.0	
DS	12								
DS	13								
DS	14								

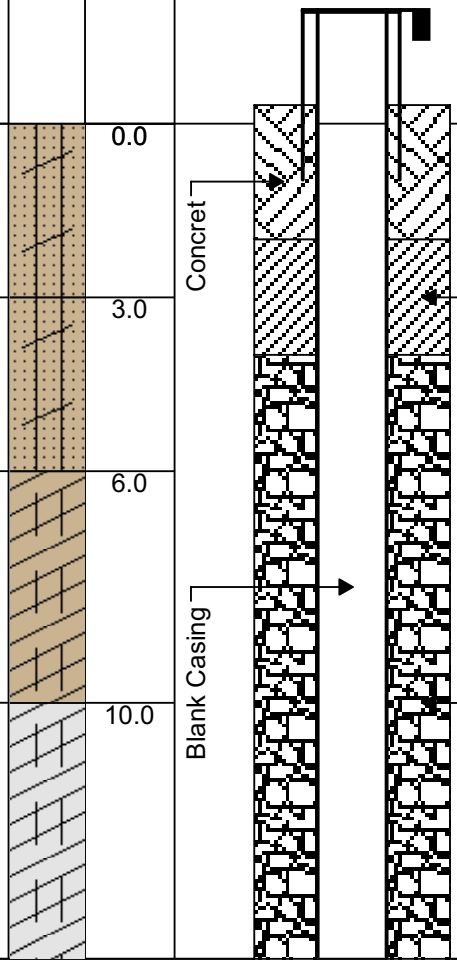

EXPLAINATIONS OF

DRILLING METHODS:
HSA - Hollow Stem Auger
SSA - Solid Stem Auger
HA - Hand Auger
AR - Air Rotary
DTR - Dual Tube Rotary
FR - Foam Rotary
MR - Mud Rotary
RC - Reverse Circulation
CT - Cable Tool
JET - Jetting

SAMPLING TYPES:
AS - Auger/Grab Sample
BS - Bailer Sample
BX - 1.5" Rock Core
NX - 2.1" Rock Core
GP - Geoprobe
HP - Hydro Punch
SS - Split Spoon
ST - Shelby Tube
BU - Bucket Sample
OTHER:
NA - No

REMARKS

Reviewed By: Bernd Braetigam

Date: Sep-16-06

KMTC

CDM

TEST WELL

WELL DETAIL: TW-1

Client: USACE
Project Location: Kabul

Project Name: KMTC
Project Number: 7503-17

Drilling Contractor: JEOSON
Drilling Method/Rig: MUD Rotary
Drillers:
Drilling Date: Sep-05-06
Borehole Coordinates:
N: UTM:Y3824375.78 E: UTM:X529653.95
Development Date: Oct/07/2006

Surface Elevation (m): 0
Total Depth (m): 119.5
Depth to Initial Water Level (m. BGS):
Abandoment Method:
Field Screening Instrument:
Logged By: BERND BRAEUTIGAM
Top of Riser Elevation(m.): 0

Sample Type	Sample Number	Field Instrument Reading (ppm)	Depth of Casing Below Ground Surface	Sample Recovery	Stratum Designation	Material Description	Graphic Log	Elev -------- Depth (m.)	Well Construction Detail
DS	15								Blank Casing
DS	16								
DS	17								
DS	18								
DS	19								
DS	20								
DS	21								
DS	22								
DS	23								
DS	24								
DS	25								
DS	26								Gravel
DS	27								
DS	28					**sandy SILT** low plasticity poor gradation		27.0	
DS	29								
DS	30								

EXPLAINATIONS OF

DRILLING METHODS:
HSA - Hollow Stem Auger
SSA - Solid Stem Auger
HA - Hand Auger
AR - Air Rotary
DTR - Dual Tube Rotary
FR - Foam Rotary
MR - Mud Rotary
RC - Reverse Circulation
CT - Cable Tool
JET - Jetting

SAMPLING TYPES:
AS - Auger/Grab Sample
BS - Bailer Sample
BX - 1.5" Rock Core
NX - 2.1" Rock Core
GP - Geoprobe
HP - Hydro Punch
SS - Split Spoon
ST - Shelby Tube
BU - Bucket Sample
OTHER:
NA - No

REMARKS

Reviewed By: Bernd Braetigam

Date: Sep-16-06

KMTC

CDM

TEST WELL

WELL DETAIL: TW-1

Client: USACE
Project Location: Kabul

Project Name: KMTC
Project Number: 7503-17

Drilling Contractor: JEOSON
Drilling Method/Rig: MUD Rotary
Drillers:
Drilling Date: Sep-05-06
Borehole Coordinates:
N: UTM:Y3824375.78 E: UTM:X529653.95
Development Date: Oct/07/2006

Surface Elevation (m): 0
Total Depth (m): 119.5
Depth to Initial Water Level (m. BGS):
Abandoment Method:
Field Screening Instrument:
Logged By: BERND BRAEUTIGAM
Top of Riser Elevation(m.): 0

Sample Type	Sample Number	Field Instrument Reading (ppm)	Depth of Casing Below Ground Surface	Sample Recovery	Stratum Designation	Material Description	Graphic Log	Elev -------- Depth (m.)	Well Construction Detail
DS	31								
DS	32								
DS	33					**sandy clayey SILT** Low plasticity gry dry poor gradation		32.0	
DS	34								
DS	35					**Silty CLAY or Clayey SILT** low to medium plasticity poor gradation		34.0	
DS	36								
DS	37								
DS	38								
DS	39								
DS	40								
DS	41								
DS	42								
DS	43								
DS	44								
DS	45								
DS	46								

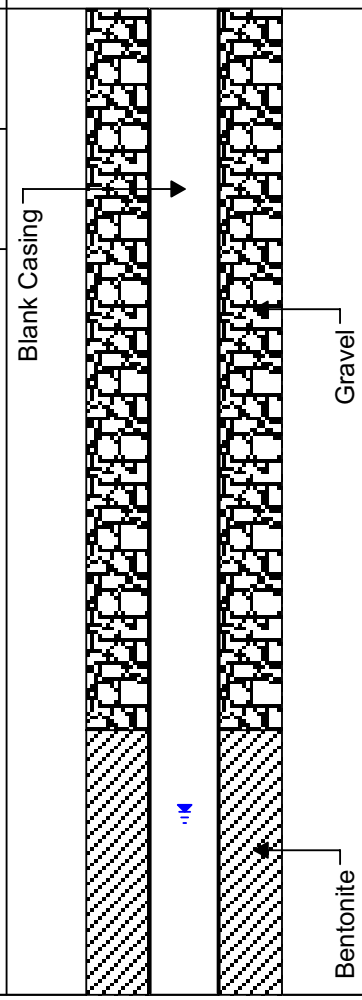

EXPLAINATIONS OF

DRILLING METHODS:
HSA - Hollow Stem Auger
SSA - Solid Stem Auger
HA - Hand Auger
AR - Air Rotary
DTR - Dual Tube Rotary
FR - Foam Rotary
MR - Mud Rotary
RC - Reverse Circulation
CT - Cable Tool
JET - Jetting

SAMPLING TYPES:
AS - Auger/Grab Sample
BS - Bailer Sample
BX - 1.5" Rock Core
NX - 2.1" Rock Core
GP - Geoprobe
HP - Hydro Punch
SS - Split Spoon
ST - Shelby Tube
BU - Bucket Sample
OTHER:
NA - No

REMARKS

Reviewed By: Bernd Braetigam

Date: Sep-16-06

KMTC

CDM

TEST WELL

WELL DETAIL: TW-1

Client: USACE
Project Location: Kabul

Project Name: KMTC
Project Number: 7503-17

Drilling Contractor: JEOSON
Drilling Method/Rig: MUD Rotary
Drillers:
Drilling Date: Sep-05-06
Borehole Coordinates:
N: UTM:Y3824375.78 E: UTM:X529653.95
Development Date: Oct/07/2006

Surface Elevation (m): 0
Total Depth (m): 119.5
Depth to Initial Water Level (m. BGS):
Abandoment Method:
Field Screening Instrument:
Logged By: BERND BRAEUTIGAM
Top of Riser Elevation(m.): 0

Sample Type	Sample Number	Field Instrument Reading (ppm)	Depth of Casing Below Ground Surface	Sample Recovery	Stratum Designation	Material Description	Elev -------- Depth (m.)
DS	47						
DS	48						
DS	49						
DS	50						
DS	51						
DS	52						
DS	53					**Sandy clayey SILT** Low plasticity poor gradation	52.0
DS	54						53.0
DS	55			S-1		**Clayey SILT** low plasticity poor gradation	54.0
DS	56			S-1		**gravely clayey sandy SILT** Low plasticity subangular brownish gray poor gradation	
DS	57			S-2			56.0
DS	58			S-3		**clayey sandy SILT** none plasticity subangular poor gradation	57.0
DS	59			S-4			58.0
DS	60			S-4		**sandy SILT** gray	
DS	61			S-5		**sandy SILT** none plasticity subangular poor gradation	60.0
DS	62						61.0

Graphic Log

Well Construction Detail

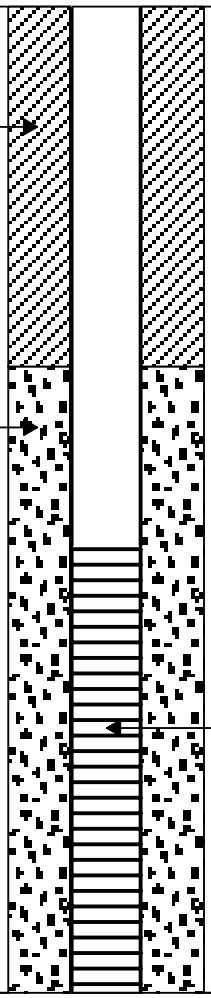

EXPLAINATIONS OF

DRILLING METHODS:
HSA - Hollow Stem Auger
SSA - Solid Stem Auger
HA - Hand Auger
AR - Air Rotary
DTR - Dual Tube Rotary
FR - Foam Rotary
MR - Mud Rotary
RC - Reverse Circulation
CT - Cable Tool
JET - Jetting

SAMPLING TYPES:
AS - Auger/Grab Sample
BS - Bailer Sample
BX - 1.5" Rock Core
NX - 2.1" Rock Core
GP - Geoprobe
HP - Hydro Punch
SS - Split Spoon
ST - Shelby Tube
BU - Bucket Sample
OTHER:
NA - No

REMARKS

Reviewed By: Bernd Braetigam

Date: Sep-16-06

KMTC

CDM

TEST WELL

WELL DETAIL: TW-1

Client: USACE
Project Location: Kabul

Project Name: KMTC
Project Number: 7503-17

Drilling Contractor: JEOSON
Drilling Method/Rig: MUD Rotary
Drillers:
Drilling Date: Sep-05-06
Borehole Coordinates:
N: UTM:Y3824375.78 E: UTM:X529653.95
Development Date: Oct/07/2006

Surface Elevation (m): 0
Total Depth (m): 119.5
Depth to Initial Water Level (m. BGS):
Abandoment Method:
Field Screening Instrument:
Logged By: BERND BRAEUTIGAM
Top of Riser Elevation(m.): 0

Sample Type	Sample Number	Field Instrument Reading (ppm)	Depth of Casing Below Ground Surface	Sample Recovery	Stratum Designation	Material Description	Elev -------- Depth (m.)
DS	63					**sandy SILT** low plasticity poor gradation	
DS	64					**Clayey sandy SILT** low plasticity gray to brown poor gradation	
DS	65						
DS	66						
DS	67						
DS	68			S-6		**clayey sandy SILT** none to medium plasticity gray poor gradation	67.0
DS	69			S-6			
DS	70					**clayey sandy SILT** Medium plasticity greenish gray poor gradation	69.0
DS	71						
DS	72						
DS	73						
DS	74						
DS	75						
DS	76						
DS	77						
DS	78						

Graphic Log

Well Construction Detail

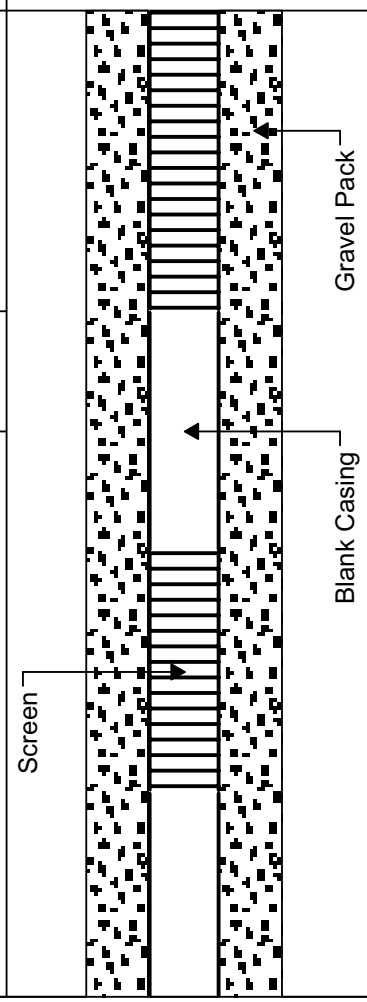

EXPLAINATIONS OF

DRILLING METHODS:
HSA - Hollow Stem Auger
SSA - Solid Stem Auger
HA - Hand Auger
AR - Air Rotary
DTR - Dual Tube Rotary
FR - Foam Rotary
MR - Mud Rotary
RC - Reverse Circulation
CT - Cable Tool
JET - Jetting

SAMPLING TYPES:
AS - Auger/Grab Sample
BS - Bailer Sample
BX - 1.5" Rock Core
NX - 2.1" Rock Core
GP - Geoprobe
HP - Hydro Punch
SS - Split Spoon
ST - Shelby Tube
BU - Bucket Sample
OTHER:
NA - No

REMARKS

Reviewed By: Bernd Braetigam

Date: Sep-16-06

KMTC

CDM

TEST WELL

WELL DETAIL: TW-1

Client: USACE
Project Location: Kabul

Project Name: KMTC
Project Number: 7503-17

Drilling Contractor: JEOSON
Drilling Method/Rig: MUD Rotary
Drillers:
Drilling Date: Sep-05-06
Borehole Coordinates:
N: UTM:Y3824375.78 E: UTM:X529653.95
Development Date: Oct/07/2006

Surface Elevation (m): 0
Total Depth (m): 119.5
Depth to Initial Water Level (m. BGS):
Abandoment Method:
Field Screening Instrument:
Logged By: BERND BRAEUTIGAM
Top of Riser Elevation(m.): 0

Sample Type	Sample Number	Field Instrument Reading (ppm)	Depth of Casing Below Ground Surface	Sample Recovery	Stratum Designation	Material Description	Elev -------- Depth (m.)
DS	79						
DS	80					**clayey sandy SILT** low plasticity greenish gray poor gradation	79.0
DS	81						
DS	82						
DS	83					**silty SAND** none plasticity brownish gray poor gradation	82.0
DS	84						
DS	85						
DS	86					**clayey sandy SILT** none to low plasticity brown poor gradation	85.0
DS	87						
DS	88						
DS	89						
DS	90					**gravely sandy SILT** none plasticity brown poor gradation	89.0
DS	91					**sandy SILT** none plasticity brown poor gradation	90.0
DS	92						91.0
DS	93					**clayey sandy SILT** low plasticity brown poor gradation	
DS	94						

Graphic Log

Well Construction Detail

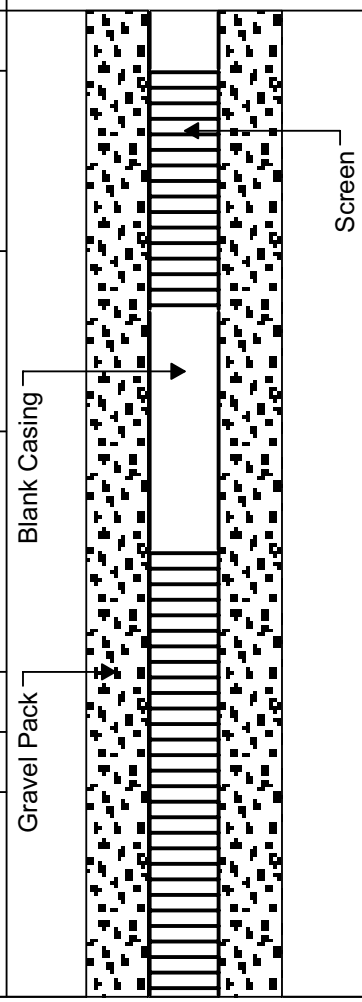

EXPLAINATIONS OF

DRILLING METHODS:
HSA - Hollow Stem Auger
SSA - Solid Stem Auger
HA - Hand Auger
AR - Air Rotary
DTR - Dual Tube Rotary
FR - Foam Rotary
MR - Mud Rotary
RC - Reverse Circulation
CT - Cable Tool
JET - Jetting

SAMPLING TYPES:
AS - Auger/Grab Sample
BS - Bailer Sample
BX - 1.5" Rock Core
NX - 2.1" Rock Core
GP - Geoprobe
HP - Hydro Punch
SS - Split Spoon
ST - Shelby Tube
BU - Bucket Sample
OTHER:
NA - No

REMARKS

Reviewed By: Bernd Braetigam

Date: Sep-16-06

KMTC

CDM

TEST WELL

WELL DETAIL: TW-1

Client: USACE
Project Location: Kabul

Project Name: KMTC
Project Number: 7503-17

Drilling Contractor: JEOSON
Drilling Method/Rig: MUD Rotary
Drillers:
Drilling Date: Sep-05-06
Borehole Coordinates:
N: UTM:Y3824375.78 E: UTM:X529653.95
Development Date: Oct/07/2006

Surface Elevation (m): 0
Total Depth (m): 119.5
Depth to Initial Water Level (m. BGS):
Abandoment Method:
Field Screening Instrument:
Logged By: BERND BRAEUTIGAM
Top of Riser Elevation(m.): 0

Sample Type	Sample Number	Field Instrument Reading (ppm)	Depth of Casing Below Ground Surface	Sample Recovery	Stratum Designation	Material Description	Elev -------- Depth (m.)
DS	95						
DS	96						
DS	97						
DS	98						
DS	99			S-7		**clayey sandy SILT** none plasticity brown poor gradation	98.0
DS	100						99.0
DS	101			S-8		**clayey sandy SILT** medium plasticity brown poor gradation	100.0
DS	102			S-8		**clayey sandy SILT** none plasticity brown poor gradation	102.0
DS	103						
DS	104					**sandy SILT** low plasticity brown poor gradation	
DS	105						
DS	106			S-9		**sandy SILT** subangular none plasticity poor gradation	105.0
DS	107			S-10			106.0
DS	108			S-10		**clayey sandy SILT** low plasticity grayish brown poor gradation	
DS	109			S-10			
DS	110			S-10			
							110.0

Graphic Log

Well Construction Detail

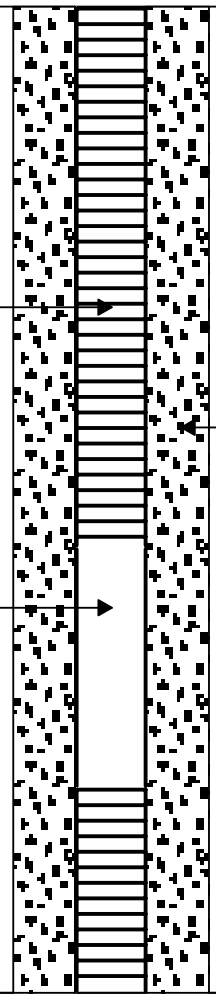

EXPLAINATIONS OF

DRILLING METHODS:
HSA - Hollow Stem Auger
SSA - Solid Stem Auger
HA - Hand Auger
AR - Air Rotary
DTR - Dual Tube Rotary
FR - Foam Rotary
MR - Mud Rotary
RC - Reverse Circulation
CT - Cable Tool
JET - Jetting

SAMPLING TYPES:
AS - Auger/Grab Sample
BS - Bailer Sample
BX - 1.5" Rock Core
NX - 2.1" Rock Core
GP - Geoprobe
HP - Hydro Punch
SS - Split Spoon
ST - Shelby Tube
BU - Bucket Sample
OTHER:
NA - No

REMARKS

Reviewed By: Bernd Braetigam

Date: Sep-16-06

KMTC

CDM

TEST WELL

WELL DETAIL: TW-1

Client: USACE
Project Location: Kabul

Project Name: KMTC
Project Number: 7503-17

Drilling Contractor: JEOSON
Drilling Method/Rig: MUD Rotary
Drillers:
Drilling Date: Sep-05-06
Borehole Coordinates:
N: UTM:Y3824375.78 E: UTM:X529653.95
Development Date: Oct/07/2006

Surface Elevation (m): 0
Total Depth (m): 119.5
Depth to Initial Water Level (m. BGS):
Abandoment Method:
Field Screening Instrument:
Logged By: BERND BRAEUTIGAM
Top of Riser Elevation(m.): 0

Sample Type	Sample Number	Field Instrument Reading (ppm)	Depth of Casing Below Ground Surface	Sample Recovery	Stratum Designation	Material Description	Graphic Log	Elev -------- Depth (m.)	Well Construction Detail
DS	111			S-11		**silty SAND** brownish gray none plasticity poor gradation			Screen
DS	112			S-11					
DS	113			S-12		**silty SAND** none plasticity gray poor gradation		112.0	
DS	114			S-13		**clayey sandy SILT** low plasticity gray poor gradation		113.0	
DS	115			S-14		**silty SAND** none plasticity gray poor gradation		114.0	
DS	116					**clayey sandy SILT** poor gradation low plasticity gray		115.0	Gravel Pack
DS	117								
DS	118								
DS	119								
DS	120								
								120.0	

EXPLAINATIONS OF

DRILLING METHODS:
HSA - Hollow Stem Auger
SSA - Solid Stem Auger
HA - Hand Auger
AR - Air Rotary
DTR - Dual Tube Rotary
FR - Foam Rotary
MR - Mud Rotary
RC - Reverse Circulation
CT - Cable Tool
JET - Jetting

SAMPLING TYPES:
AS - Auger/Grab Sample
BS - Bailer Sample
BX - 1.5" Rock Core
NX - 2.1" Rock Core
GP - Geoprobe
HP - Hydro Punch
SS - Split Spoon
ST - Shelby Tube
BU - Bucket Sample
OTHER:
NA - No

REMARKS

Reviewed By: Bernd Braetigam Date: Sep-16-06

KMTC

CDM

TEST WELL

WELL DETAIL: TW-2

Client: USACE
Project Location: KABUL

Project Name: KMTC
Project Number: 7503-17

Drilling Contractor: URB
Drilling Method/Rig: Mud Rutary
Drillers:
Drilling Date: Sep-9-06
Borehole Coordinates:
N: UTM:Y3824411.86 E: UTM:X529644.85
Development Date: Oct/07/2006

Surface Elevation (m): 0
Total Depth (m): 155
Depth to Initial Water Level (m. BGS):
Abandoment Method:
Field Screening Instrument:
Logged By: Bernd Braeutigam
Top of Riser Elevation(m.): 0

Sample Type	Sample Number	Field Instrument Reading (ppm)	Depth of Casing Below Ground Surface	Sample Recovery	Stratum Designation	Material Description	Graphic Log	Elev -------- Depth (m.)	Well Construction Detail
						Ground Surface			
DS	1					**clayey SILT** none olasticity none		0.0	
DS	2					**clayey sandy SILT** none plasticity		1.0	Concrete
DS	3					**silty SAND** Angular to subangular		2.0	Bentonite
DS	4								
DS	5					**gravely SAND** subangular		4.0	
DS	6								
DS	7								
DS	8								
DS	9					**sandy SILT** low plasticity brown		8.0	
DS	10								Gravel
DS	11								
DS	12								
DS	13								
DS	14					**clayey silty SAND** sub angularnone plasticity		13.0	
								14.0	

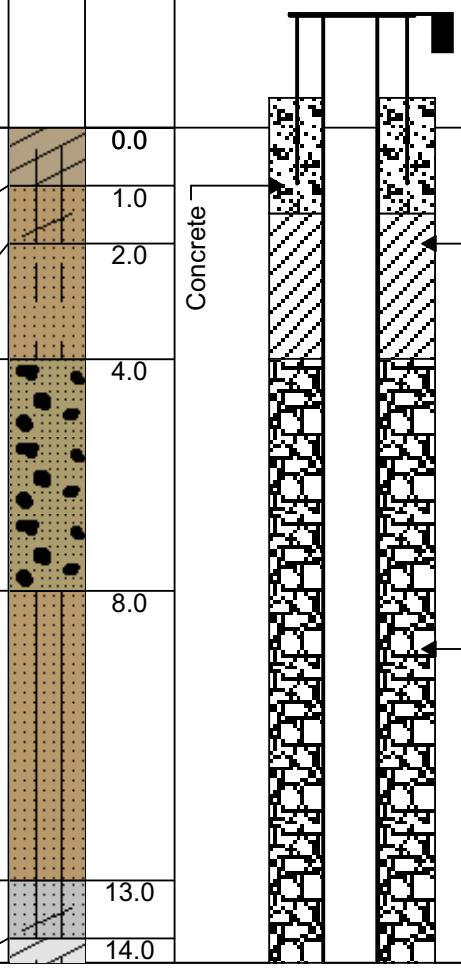

EXPLAINATIONS OF

DRILLING METHODS:
HSA - Hollow Stem Auger
SSA - Solid Stem Auger
HA - Hand Auger
AR - Air Rotary
DTR - Dual Tube Rotary
FR - Foam Rotary
MR - Mud Rotary
RC - Reverse Circulation
CT - Cable Tool
JET - Jetting

SAMPLING TYPES:
AS - Auger/Grab Sample
BS - Bailer Sample
BX - 1.5" Rock Core
NX - 2.1" Rock Core
GP - Geoprobe
HP - Hydro Punch
SS - Split Spoon
ST - Shelby Tube
BU - Bucket Sample
OTHER:
NA - No

REMARKS

Reviewed By: Bernd Braeutigam Date: Sep-18-06

KMTC

CDM

TEST WELL

WELL DETAIL: TW-2

Client: USACE
Project Location: KABUL

Project Name: KMTC
Project Number: 7503-17

Drilling Contractor: URB
Drilling Method/Rig: Mud Rutary
Drillers:
Drilling Date: Sep-9-06
Borehole Coordinates:
N: UTM:Y3824411.86 E: UTM:X529644.85
Development Date: Oct/07/2006

Surface Elevation (m): 0
Total Depth (m): 155
Depth to Initial Water Level (m. BGS):
Abandoment Method:
Field Screening Instrument:
Logged By: Bernd Braeutigam
Top of Riser Elevation(m.): 0

Sample Type	Sample Number	Field Instrument Reading (ppm)	Depth of Casing Below Ground Surface	Sample Recovery	Stratum Designation	Material Description	Graphic Log	Elev -------- Depth (m.)	Well Construction Detail
DS	15					**silty CLAY** medium plasticity gray color			
DS	16								
DS	17								
DS	18					**sandy silty CLAY** angular medium plasticity gray brown		17.0	
DS	19								
DS	20								
DS	21								
DS	22					**silty SAND** subangular none plasticity		21.0	
DS	23								
DS	24								
DS	25					**clayey silty SAND** angular to subangular none plasticity		24.0	
DS	26					**SAND** subangular brownish gray		25.0	
DS	27								
DS	28					**silty SAND** subangular gray brown		27.0	
DS	29								
DS	30							29.0	

EXPLAINATIONS OF

DRILLING METHODS:
HSA - Hollow Stem Auger
SSA - Solid Stem Auger
HA - Hand Auger
AR - Air Rotary
DTR - Dual Tube Rotary
FR - Foam Rotary
MR - Mud Rotary
RC - Reverse Circulation
CT - Cable Tool
JET - Jetting

SAMPLING TYPES:
AS - Auger/Grab Sample
BS - Bailer Sample
BX - 1.5" Rock Core
NX - 2.1" Rock Core
GP - Geoprobe
HP - Hydro Punch
SS - Split Spoon
ST - Shelby Tube
BU - Bucket Sample
OTHER:
NA - No

REMARKS

Reviewed By: Bernd Braeutigam Date: Sep-18-06

KMTC

CDM

TEST WELL

WELL DETAIL: TW-2

Client: USACE
Project Location: KABUL

Project Name: KMTC
Project Number: 7503-17

Drilling Contractor: URB
Drilling Method/Rig: Mud Rutary
Drillers:
Drilling Date: Sep-9-06
Borehole Coordinates:
N: UTM:Y3824411.86 E: UTM:X529644.85
Development Date: Oct/07/2006

Surface Elevation (m): 0
Total Depth (m): 155
Depth to Initial Water Level (m. BGS):
Abandoment Method:
Field Screening Instrument:
Logged By: Bernd Braeutigam
Top of Riser Elevation(m.): 0

Sample Type	Sample Number	Field Instrument Reading (ppm)	Depth of Casing Below Ground Surface	Sample Recovery	Stratum Designation	Material Description	Graphic Log	Elev -------- Depth (m.)	Well Construction Detail
DS	31					**sandy silty CLAY** angular to subangular none plasticity blueish gray			Water Level
DS	32								
DS	33								
DS	34								
DS	35								
DS	36								
DS	37								
DS	38					**silty CLAY** medium plasticity greenish blueish gray		37.0	
DS	39								
DS	40								
DS	41					**sandy silty CLAY** medium plasticity greenish blueish gray		40.0	
DS	42					**silty CLAY** medium plasticity greenish blueish gray		41.0	
DS	43								
DS	44								
DS	45								
DS	46								

EXPLAINATIONS OF

DRILLING METHODS:
HSA - Hollow Stem Auger
SSA - Solid Stem Auger
HA - Hand Auger
AR - Air Rotary
DTR - Dual Tube Rotary
FR - Foam Rotary
MR - Mud Rotary
RC - Reverse Circulation
CT - Cable Tool
JET - Jetting

SAMPLING TYPES:
AS - Auger/Grab Sample
BS - Bailer Sample
BX - 1.5" Rock Core
NX - 2.1" Rock Core
GP - Geoprobe
HP - Hydro Punch
SS - Split Spoon
ST - Shelby Tube
BU - Bucket Sample
OTHER:
NA - No

REMARKS

Reviewed By: Bernd Braeutigam Date: Sep-18-06

KMTC

CDM

TEST WELL

WELL DETAIL: TW-2

Client: USACE
Project Location: KABUL

Project Name: KMTC
Project Number: 7503-17

Drilling Contractor: URB
Drilling Method/Rig: Mud Rutary
Drillers:
Drilling Date: Sep-9-06
Borehole Coordinates:
N: UTM:Y3824411.86 E: UTM:X529644.85
Development Date: Oct/07/2006

Surface Elevation (m): 0
Total Depth (m): 155
Depth to Initial Water Level (m. BGS):
Abandoment Method:
Field Screening Instrument:
Logged By: Bernd Braeutigam
Top of Riser Elevation(m.): 0

Sample Type	Sample Number	Field Instrument Reading (ppm)	Depth of Casing Below Ground Surface	Sample Recovery	Stratum Designation	Material Description	Graphic Log	Elev -------- Depth (m.)	Well Construction Detail
DS	47								
DS	48								
DS	49								
DS	50					**sandy clayey SILT** angular low plasticity		49.0	
DS	51					**silty CLAY** medium plasticity greenish blueish gray		50.0	
DS	52								
DS	53								
DS	54								
DS	55								
DS	56								
DS	57								
DS	58								
DS	59			S-1		**gravely clay silty SAND** subangular low plasticity gray		58.0	
DS	60					**silty CLAY** medium plasticity gray		59.0	
DS	61								
DS	62								

EXPLAINATIONS OF

DRILLING METHODS:
HSA - Hollow Stem Auger
SSA - Solid Stem Auger
HA - Hand Auger
AR - Air Rotary
DTR - Dual Tube Rotary
FR - Foam Rotary
MR - Mud Rotary
RC - Reverse Circulation
CT - Cable Tool
JET - Jetting

SAMPLING TYPES:
AS - Auger/Grab Sample
BS - Bailer Sample
BX - 1.5" Rock Core
NX - 2.1" Rock Core
GP - Geoprobe
HP - Hydro Punch
SS - Split Spoon
ST - Shelby Tube
BU - Bucket Sample
OTHER:
NA - No

REMARKS

Reviewed By: Bernd Braeutigam Date: Sep-18-06

KMTC

CDM

TEST WELL

WELL DETAIL: TW-2

Client: USACE
Project Location: KABUL

Project Name: KMTC
Project Number: 7503-17

Drilling Contractor: URB
Drilling Method/Rig: Mud Rutary
Drillers:
Drilling Date: Sep-9-06
Borehole Coordinates:
N: UTM:Y3824411.86 E: UTM:X529644.85
Development Date: Oct/07/2006

Surface Elevation (m): 0
Total Depth (m): 155
Depth to Initial Water Level (m. BGS):
Abandoment Method:
Field Screening Instrument:
Logged By: Bernd Braeutigam
Top of Riser Elevation(m.): 0

Sample Type	Sample Number	Field Instrument Reading (ppm)	Depth of Casing Below Ground Surface	Sample Recovery	Stratum Designation	Material Description	Elev -------- Depth (m.)
DS	63						
DS	64						
DS	65						
DS	66						
DS	67						
DS	68						
DS	69						
DS	70						
DS	71						
DS	72			S-2		**clayey silty SAND** low plasticity poor gradation	71.0
DS	73			S-3		**clayey silty SAND** subangular low plasticity gray	72.0
DS	74			S-3			
DS	75					**clayey silty SAND** subangular none plasticity gray	74.0
DS	76						
DS	77			S-4		**clayey slty SAND** sunangular low plasticity gray	76.0
DS	78			S-4			
							78.0

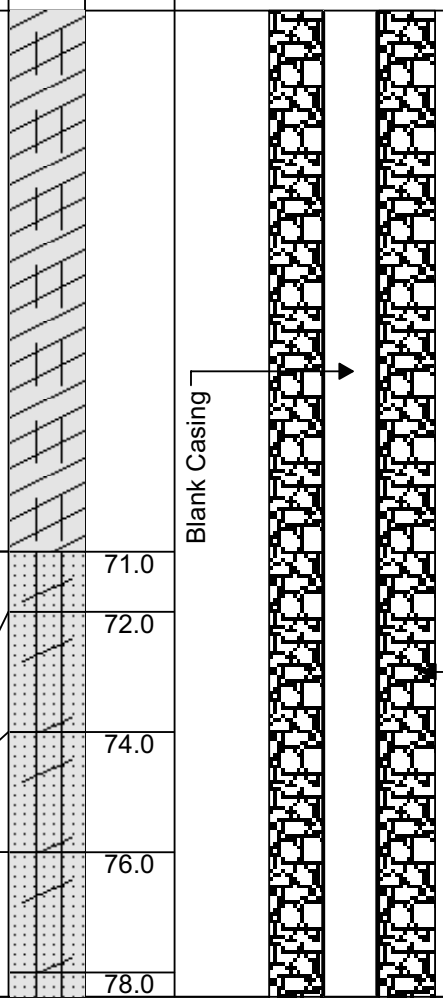

EXPLAINATIONS OF

DRILLING METHODS:
HSA - Hollow Stem Auger
SSA - Solid Stem Auger
HA - Hand Auger
AR - Air Rotary
DTR - Dual Tube Rotary
FR - Foam Rotary
MR - Mud Rotary
RC - Reverse Circulation
CT - Cable Tool
JET - Jetting

SAMPLING TYPES:
AS - Auger/Grab Sample
BS - Bailer Sample
BX - 1.5" Rock Core
NX - 2.1" Rock Core
GP - Geoprobe
HP - Hydro Punch
SS - Split Spoon
ST - Shelby Tube
BU - Bucket Sample
OTHER:
NA - No

REMARKS

Reviewed By: Bernd Braeutigam Date: Sep-18-06

KMTC

CDM

TEST WELL

WELL DETAIL: TW-2

Client: USACE
Project Location: KABUL

Project Name: KMTC
Project Number: 7503-17

Drilling Contractor: URB
Drilling Method/Rig: Mud Rutary
Drillers:
Drilling Date: Sep-9-06
Borehole Coordinates:
N: UTM:Y3824411.86 E: UTM:X529644.85
Development Date: Oct/07/2006

Surface Elevation (m): 0
Total Depth (m): 155
Depth to Initial Water Level (m. BGS):
Abandoment Method:
Field Screening Instrument:
Logged By: Bernd Braeutigam
Top of Riser Elevation(m.): 0

Sample Type	Sample Number	Field Instrument Reading (ppm)	Depth of Casing Below Ground Surface	Sample Recovery	Stratum Designation	Material Description	Elev -------- Depth (m.)
DS	79			S-5		**clayey silty SAND** none plasticitygray	
DS	80			S-5			
DS	81			S-6		**clayey silty SAND** none plasticity gray subangular poor gradation	80.0
DS	82			S-6			
DS	83			S-7		**clayey silty SAND** angular none plasticity gray poor gradation	82.0
DS	84			S-7			
DS	85					**sandy clayey SILT** low plasticity subrounded poor gradation	84.0
DS	86						
DS	87						
DS	88						
DS	89					**silty SAND** low plasticity poor gradation	88.0
DS	90						
DS	91						
DS	92						
DS	93						
DS	94						

Graphic Log

Well Construction Detail

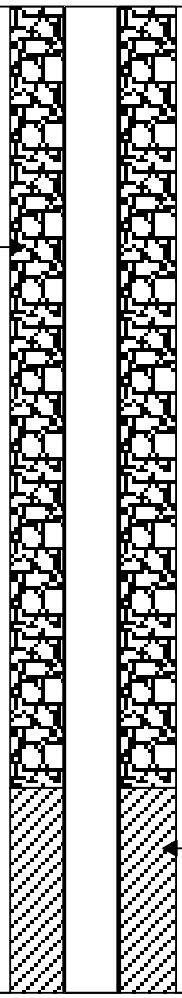

EXPLAINATIONS OF

DRILLING METHODS:
HSA - Hollow Stem Auger
SSA - Solid Stem Auger
HA - Hand Auger
AR - Air Rotary
DTR - Dual Tube Rotary
FR - Foam Rotary
MR - Mud Rotary
RC - Reverse Circulation
CT - Cable Tool
JET - Jetting

SAMPLING TYPES:
AS - Auger/Grab Sample
BS - Bailer Sample
BX - 1.5" Rock Core
NX - 2.1" Rock Core
GP - Geoprobe
HP - Hydro Punch
SS - Split Spoon
ST - Shelby Tube
BU - Bucket Sample
OTHER:
NA - No

REMARKS

Reviewed By: Bernd Braeutigam Date: Sep-18-06

KMTC

CDM

TEST WELL

WELL DETAIL: TW-2

Client: USACE
Project Location: KABUL

Project Name: KMTC
Project Number: 7503-17

Drilling Contractor: URB
Drilling Method/Rig: Mud Rutary
Drillers:
Drilling Date: Sep-9-06
Borehole Coordinates:
N: UTM:Y3824411.86 E: UTM:X529644.85
Development Date: Oct/07/2006

Surface Elevation (m): 0
Total Depth (m): 155
Depth to Initial Water Level (m. BGS):
Abandoment Method:
Field Screening Instrument:
Logged By: Bernd Braeutigam
Top of Riser Elevation(m.): 0

Sample Type	Sample Number	Field Instrument Reading (ppm)	Depth of Casing Below Ground Surface	Sample Recovery	Stratum Designation	Material Description	Elev -------- Depth (m.)
DS	95						
DS	96						
DS	97						
DS	98						
DS	99						
DS	100						
DS	101					**clayey sandy SILT** subangular low plasticity gray poor gradation	100.0
DS	102						
DS	103						
DS	104						
DS	105					**clayey silty SAND** none to low plasticity brown gray poor gradation	104.0
DS	106						
DS	107						
DS	108			S-8		**SAND** subround none plasticity grayish brown poor gradation	107.0
DS	109			S-8			
DS	110						109.0

Graphic Log

Well Construction Detail

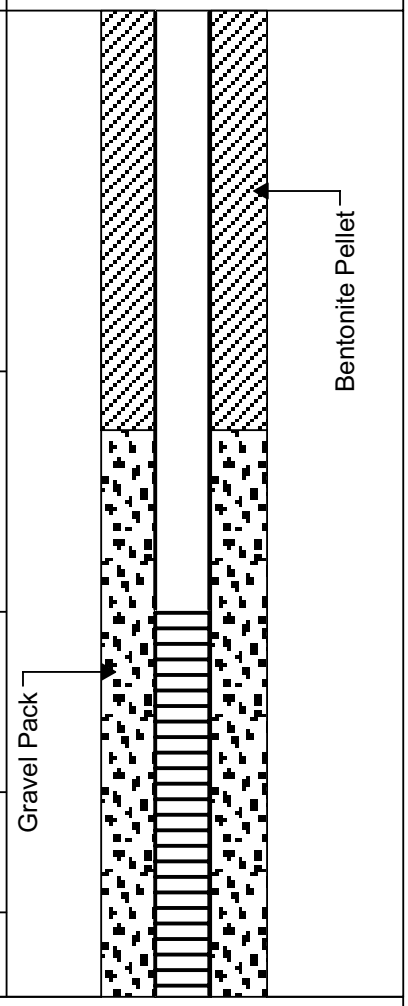

EXPLAINATIONS OF

DRILLING METHODS:
HSA - Hollow Stem Auger
SSA - Solid Stem Auger
HA - Hand Auger
AR - Air Rotary
DTR - Dual Tube Rotary
FR - Foam Rotary
MR - Mud Rotary
RC - Reverse Circulation
CT - Cable Tool
JET - Jetting

SAMPLING TYPES:
AS - Auger/Grab Sample
BS - Bailer Sample
BX - 1.5" Rock Core
NX - 2.1" Rock Core
GP - Geoprobe
HP - Hydro Punch
SS - Split Spoon
ST - Shelby Tube
BU - Bucket Sample
OTHER:
NA - No

REMARKS

Reviewed By: Bernd Braeutigam Date: Sep-18-06

KMTC

CDM

TEST WELL

WELL DETAIL: TW-2

Client: USACE
Project Location: KABUL

Project Name: KMTC
Project Number: 7503-17

Drilling Contractor: URB
Drilling Method/Rig: Mud Rutary
Drillers:
Drilling Date: Sep-9-06
Borehole Coordinates:
N: UTM:Y3824411.86 E: UTM:X529644.85
Development Date: Oct/07/2006

Surface Elevation (m): 0
Total Depth (m): 155
Depth to Initial Water Level (m. BGS):
Abandoment Method:
Field Screening Instrument:
Logged By: Bernd Braeutigam
Top of Riser Elevation(m.): 0

Sample Type	Sample Number	Field Instrument Reading (ppm)	Depth of Casing Below Ground Surface	Sample Recovery	Stratum Designation	Material Description	Elev -------- Depth (m.)
DS	111					**sandy silty CLAY** subround low to medium plasticity gray brown poor gradation	
DS	112						
DS	113						
DS	114						
DS	115						
DS	116					**sandy silty CLAY** subround to subangular medium plasticity brown poor gradation	115.0
DS	117						
DS	118						
DS	119			S-9		**clayey silty SAND** subangular medium plasticity brown poor gradation	118.0
DS	120			S-9			
DS	121			S-9			
DS	122			S-10		**clayey silty SAND** low plasticity subround to subangular poor gradation	121.0
DS	123					**clayey silty SAND** subangular to subrounded low plasticity brown poor gradation	122.0
DS	124			S-11			123.0
DS	125						124.0
DS	126					**clayey silty SAND** subanngular to subround poor gradation	

Graphic Log

Well Construction Detail

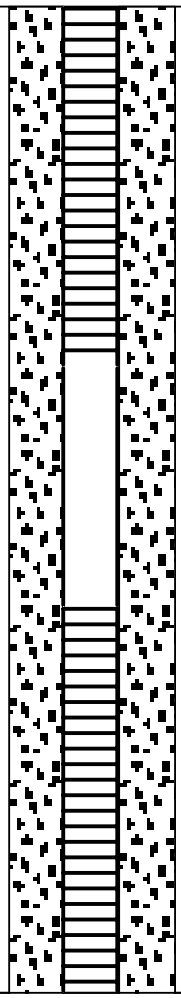

EXPLAINATIONS OF

DRILLING METHODS:
HSA - Hollow Stem Auger
SSA - Solid Stem Auger
HA - Hand Auger
AR - Air Rotary
DTR - Dual Tube Rotary
FR - Foam Rotary
MR - Mud Rotary
RC - Reverse Circulation
CT - Cable Tool
JET - Jetting

SAMPLING TYPES:
AS - Auger/Grab Sample
BS - Bailer Sample
BX - 1.5" Rock Core
NX - 2.1" Rock Core
GP - Geoprobe
HP - Hydro Punch
SS - Split Spoon
ST - Shelby Tube
BU - Bucket Sample
OTHER:
NA - No

REMARKS

Reviewed By: Bernd Braeutigam Date: Sep-18-06

KMTC

CDM

TEST WELL

WELL DETAIL: TW-2

Client: USACE
Project Location: KABUL

Project Name: KMTC
Project Number: 7503-17

Drilling Contractor: URB
Drilling Method/Rig: Mud Rutary
Drillers:
Drilling Date: Sep-9-06
Borehole Coordinates:
N: UTM:Y3824411.86 E: UTM:X529644.85
Development Date: Oct/07/2006

Surface Elevation (m): 0
Total Depth (m): 155
Depth to Initial Water Level (m. BGS):
Abandoment Method:
Field Screening Instrument:
Logged By: Bernd Braeutigam
Top of Riser Elevation(m.): 0

Sample Type	Sample Number	Field Instrument Reading (ppm)	Depth of Casing Below Ground Surface	Sample Recovery	Stratum Designation	Material Description	Elev -------- Depth (m.)
DS	127					**clayey sandy SILT** none to low plasticity poor gradation	
DS	128						
DS	129					**sandy silty CLAY** medium plasticity poor gradation	128.0
DS	130						
DS	131					**clayey silty SAND** low plasticity subrounded gray poor gradation	130.0
DS	132						
DS	133			S-12		**clayey silty SAND** low plasticity subrounded gray poor gradation	132.0
DS	134			S-12			
DS	135			S-12			
DS	136			S-12			
DS	137			S-13		**silty SAND** none plasticity subround gray poor gradation	136.0
DS	138			S-13			
DS	139					**clayey silty SAND** low plasticity poor gadation	138.0
DS	140			S-14		**clayey silty SAND** subangular to subroun low plasticity poor gradation	139.0
DS	141			S-14			
DS	142			S-14			

Graphic Log

Well Construction Detail

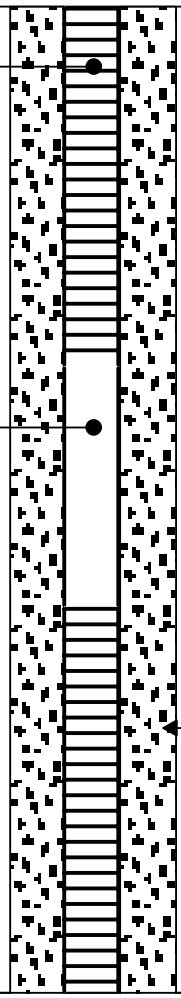

EXPLAINATIONS OF

DRILLING METHODS:
HSA - Hollow Stem Auger
SSA - Solid Stem Auger
HA - Hand Auger
AR - Air Rotary
DTR - Dual Tube Rotary
FR - Foam Rotary
MR - Mud Rotary
RC - Reverse Circulation
CT - Cable Tool
JET - Jetting

SAMPLING TYPES:
AS - Auger/Grab Sample
BS - Bailer Sample
BX - 1.5" Rock Core
NX - 2.1" Rock Core
GP - Geoprobe
HP - Hydro Punch
SS - Split Spoon
ST - Shelby Tube
BU - Bucket Sample
OTHER:
NA - No

REMARKS

Reviewed By: Bernd Braeutigam Date: Sep-18-06

KMTC

CDM

TEST WELL

WELL DETAIL: TW-2

Client: USACE
Project Location: KABUL

Project Name: KMTC
Project Number: 7503-17

Drilling Contractor: URB
Drilling Method/Rig: Mud Rutary
Drillers:
Drilling Date: Sep-9-06
Borehole Coordinates:
N: UTM:Y3824411.86 E: UTM:X529644.85
Development Date: Oct/07/2006

Surface Elevation (m): 0
Total Depth (m): 155
Depth to Initial Water Level (m. BGS):
Abandoment Method:
Field Screening Instrument:
Logged By: Bernd Braeutigam
Top of Riser Elevation(m.): 0

Sample Type	Sample Number	Field Instrument Reading (ppm)	Depth of Casing Below Ground Surface	Sample Recovery	Stratum Designation	Material Description	Graphic Log	Elev -------- Depth (m.)	Well Construction Detail
DS	143								Gravel Pack
DS	144					**sandy silty CLAY** medium plasticity subrounded poor gradation		143.0	
DS	145								
DS	146								
DS	147								
DS	148								
DS	149					**sandy silty CLAY** high plasticity greenish brown poor gradation		148.0	
DS	150								
DS	151								
DS	152					**clayey sandy SILT** low to medium plasticiy poor gradation		151.0	
DS	153								Gravel
DS	154								
DS	155								
								155.0	

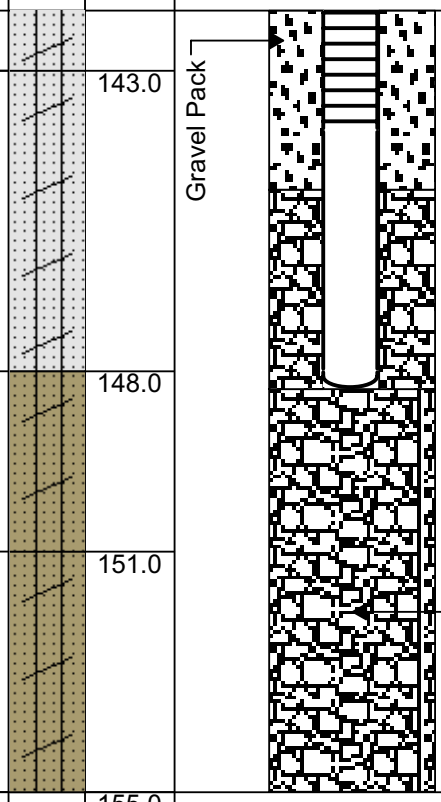

EXPLAINATIONS OF

DRILLING METHODS:
HSA - Hollow Stem Auger
SSA - Solid Stem Auger
HA - Hand Auger
AR - Air Rotary
DTR - Dual Tube Rotary
FR - Foam Rotary
MR - Mud Rotary
RC - Reverse Circulation
CT - Cable Tool
JET - Jetting

SAMPLING TYPES:
AS - Auger/Grab Sample
BS - Bailer Sample
BX - 1.5" Rock Core
NX - 2.1" Rock Core
GP - Geoprobe
HP - Hydro Punch
SS - Split Spoon
ST - Shelby Tube
BU - Bucket Sample
OTHER:
NA - No

REMARKS

Reviewed By: Bernd Braeutigam Date: Sep-18-06

Attachment D

Typical Well House Design

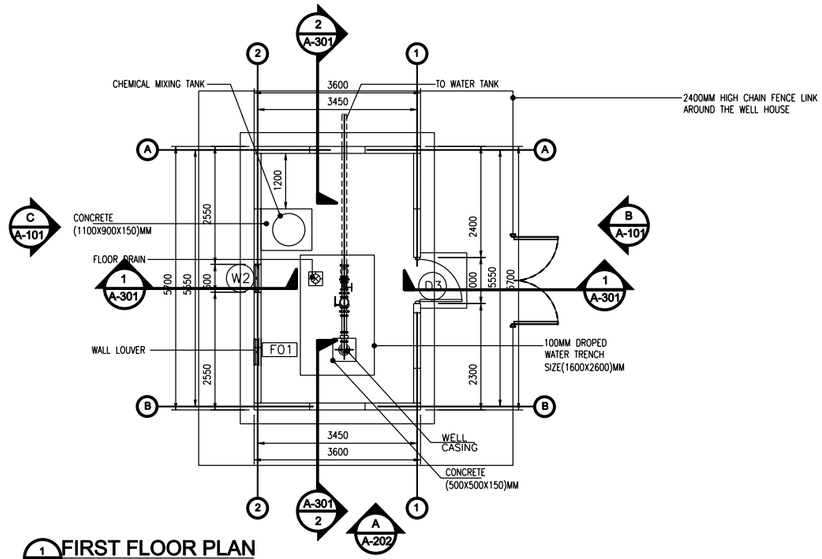

1 FIRST FLOOR PLAN
A-101 SCALE= 1:50

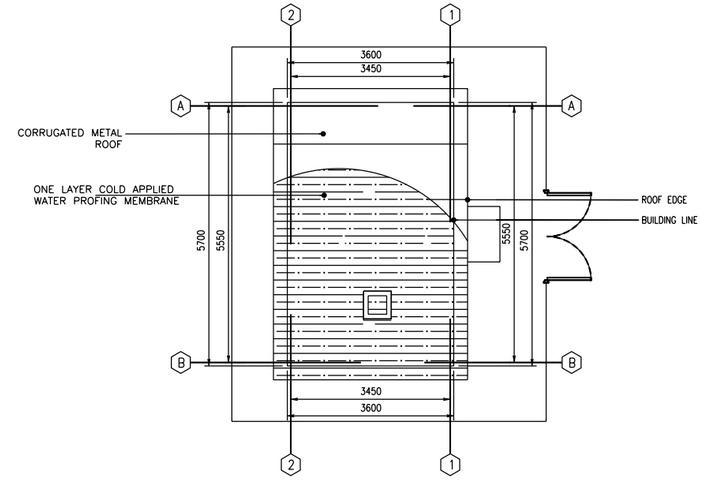

2 ROOF FLOOR PLAN
A-101 SCALE= 1:50

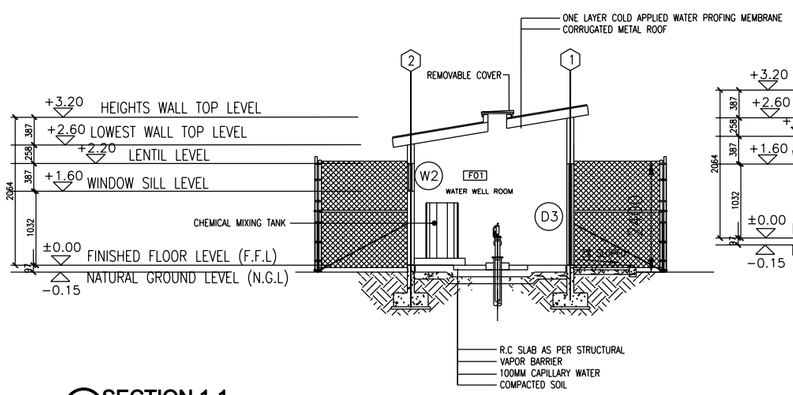

3 SECTION 1-1
A-101 SCALE= 1:50

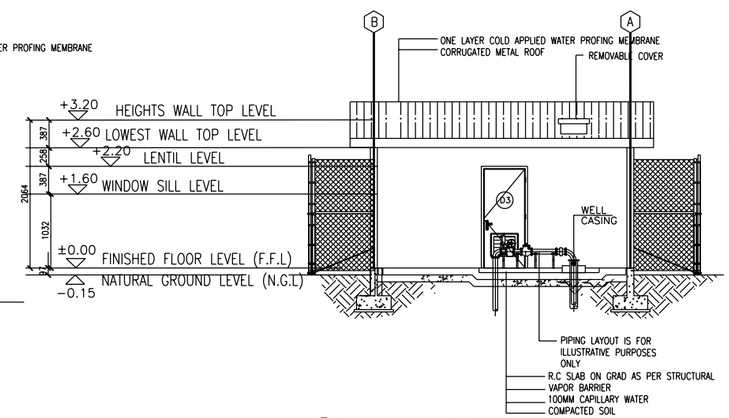

4 SECTION 2-2
A-101 SCALE= 1:50

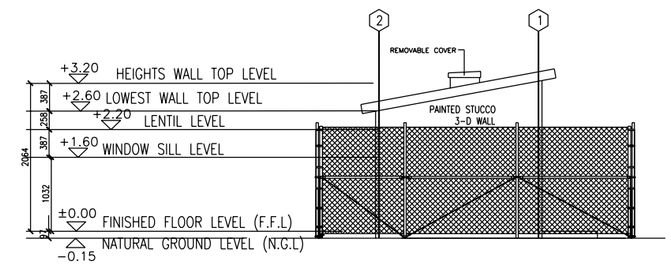

5 ELEVATION A
A-101 SCALE= 1:50

FINISH SCHEDULE LEGEND

FLOOR

F1	Gray Dust Proffer Surface Hardening Sealer
F2	300mmX300mm Terrazzo Tiles

WALL

W1	Painted Plaster
W2	200mmX300mm glazed ceramic tiles up to 2000mm above F.F.L.

CEILING

C1	White Painted Plaster

FINISH SCHEDULE

Room	Usage	Floor
F01	WELL HOUSE	F1

NOTES

1- ALL DIMENSIONS ARE IN MM UNLESS OTHERWISE SPECIFIED.
2- ALL LEVELS ARE IN METER (M) UNLESS OTHERWISE SPECIFIED
3- ALL WALLS ARE 150MM CMU MASONRY WALL, (50MM SHOTCREAT BOTH SIDES AND 50MM INSULATION)
4- EXTERIOR WALLS TO BE COLORED STUCCO.
5-FOR ALL ROOFS ONE LAYER COLD APPLIED WATER PROFING MEMBRANE
6- SEE RFP SECTION 01015 FOR PUMP HOUSE PIPING REQUIREMENTS

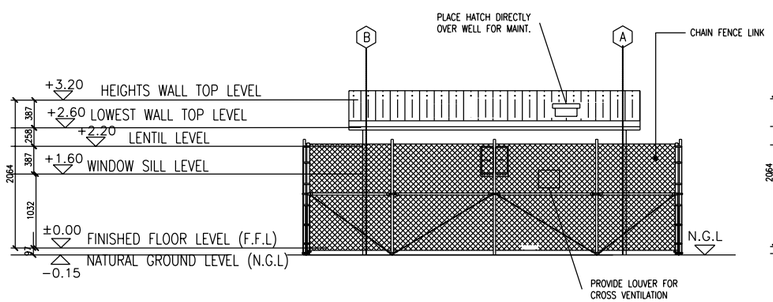

6 ELEVATION C
A-101 SCALE= 1:50

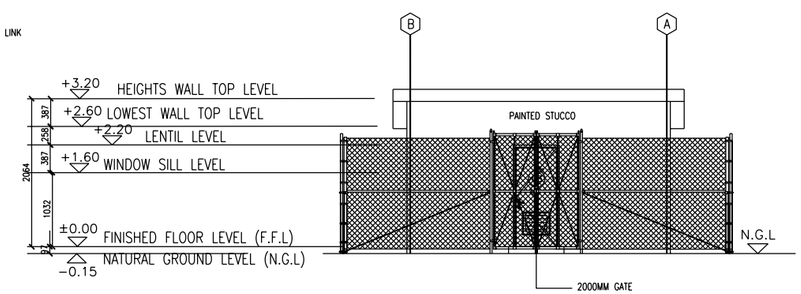

7 ELEVATION B
A-101 SCALE= 1:50

1 0 1 2 3 4 5 6 7 8 9
1:50

US ARMY CORPS OF ENGINEERS AFGHANISTAN ENGINEER DISTRICT

SYMBOL	DESCRIPTION	DATE	APV

DESIGNED BY: AED | DATE: XX-XX-XX | REV. ___
DWN BY: AED | CKD BY: AED | DESIGN FILE NO. ___
REVIEWED BY: ___ | DRAWING CODE: ___
SUBMITTED BY: ___ | FILE NAME: ___
PLOT SCALE: AS SHOWN
CONTRACT NO. XX-XX-XX

U.S. ARMY CORPS OF ENGINEERS AFGHANISTAN ENGINEER DISTRICT APO AE 09356

ENGINEERING AND CONSTRUCTION DIVISION

STANDARD DESIGN
AFGHANISTAN
WELL WATER HOUSE FACILITY FLOOR PLAN

SHEET REFERENCE NUMBER:
A-101

Attachment E

Security Fence Details

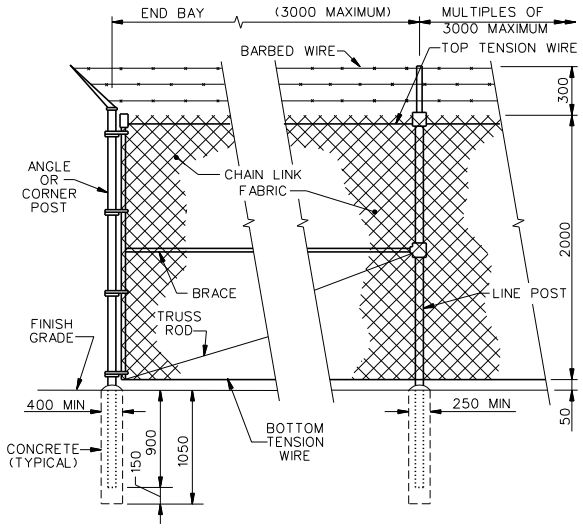

FENCE DETAILS

NOT TO SCALE

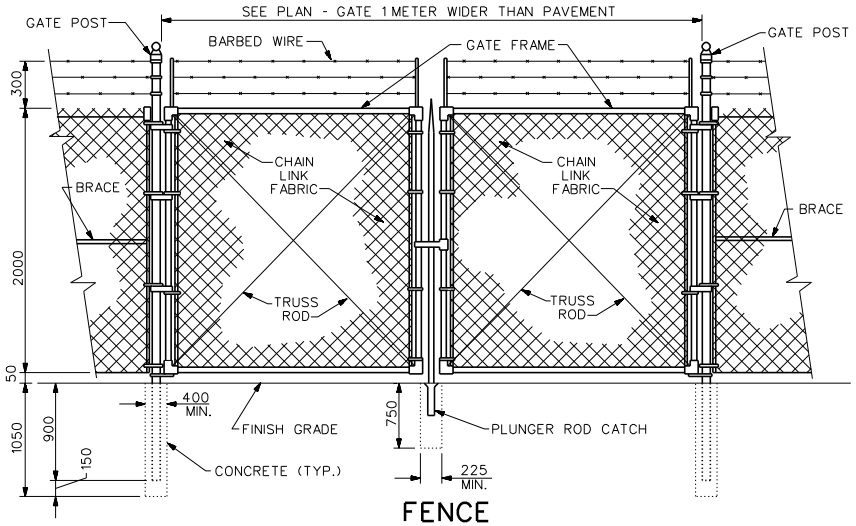

FENCE DOUBLE SWING GATE

NOT TO SCALE

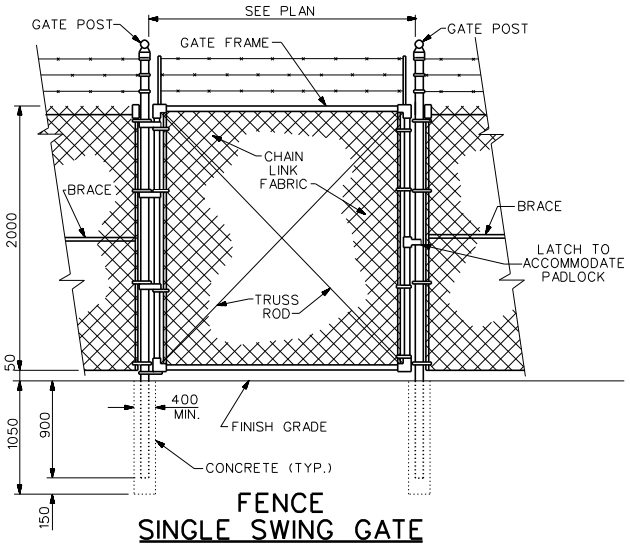

FENCE SINGLE SWING GATE

NOT TO SCALE

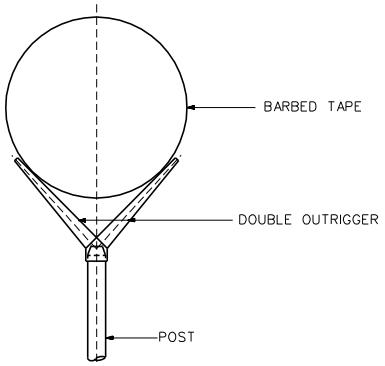

BARBED WIRE OUTRIGGER DETAIL

NOT TO SCALE

SEE SHEET C-3 FOR CABLE BARRIER DETAILS

ANA REGIONAL BRIGADE
AFGHANISTAN

FENCE DETAILS

NOTES:
1. SEE SECURITY FENCE DETAILS (SHEET C-2) FOR FENCE REQUIREMENTS.
2. MAXIMUM HORIZONTAL DISTANCE BETWEEN DEADMAN 60 METERS
3. WIRE ROPE TO BE CONTINUOUS BETWEEN DEADMAN.
4. ALL PIPE, CABLE AND ACCESSORIES TO BE GALVANIZED.

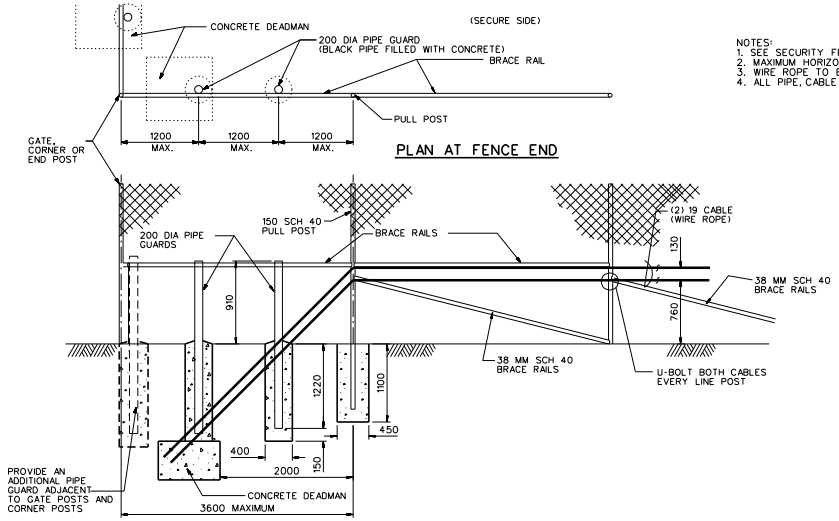

PLAN AT FENCE END

END

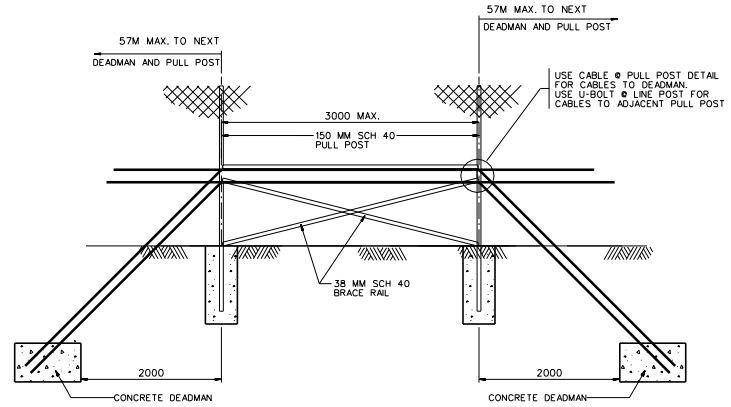

INTERMEDIATE

CABLE DETAIL WITH DEADMAN

NOT TO SCALE

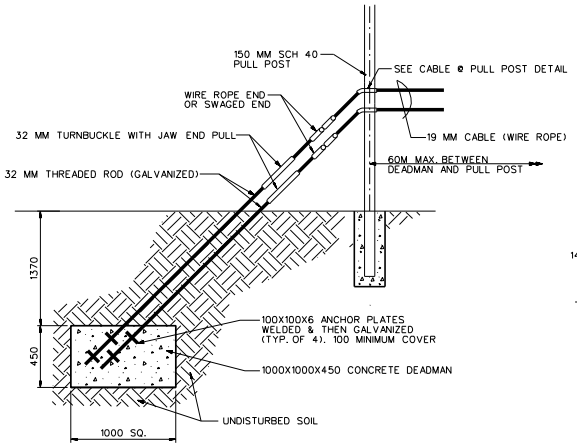

DEADMAN DETAIL

NOT TO SCALE

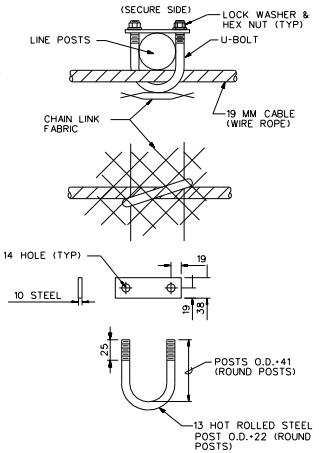

U-BOLT @ LINE POST DETAIL

NOT TO SCALE

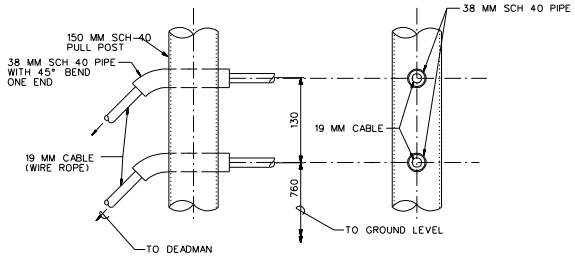

CABLE @ PULL POST DETAIL

NOT TO SCALE

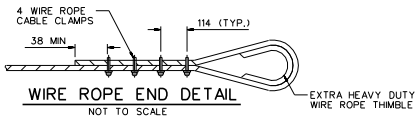

WIRE ROPE END DETAIL

NOT TO SCALE

NOTE: TORQUE TO BE APPLIED TO THE NUTS OF THE WIRE ROPE CLAMPS SHALL BE 18 M-KG (130 FT-LB)

ANA REGIONAL BRIGADE
AFGHANISTAN

FENCE DETAILS

SHEET C-3

Attachment F

WHO Water Quality Standards

WHO's Guidelines for Drinking-water Quality, 2006, are the international reference point for standard setting and drinking-water safety.

Element/ substance	Symbol/ formula	Normally found in fresh water/surface water/ground water	Health based guideline by the WHO
Aluminium	Al		0,2 mg/l
Ammonia	NH_4	< 0,2 mg/l (up to 0,3 mg/l in anaerobic waters)	No guideline
Antimony	Sb	< 4 µg/l	0.02 mg/l
Arsenic	As		0,01 mg/l
Asbestos			No guideline
Barium	Ba		0,7 mg/l
Berillium	Be	< 1 µg/l	No guideline
Boron	B	< 1 mg/l	0,5 mg/l
Cadmium	Cd	< 1 µg/l	0,003 mg/l
Chloride	Cl		No guideline
Chromium	Cr^{+3}, Cr^{+6}	< 2 µg/l	0,05 mg/l
Colour			Not mentioned
Copper	Cu		2 mg/l
Cyanide	CN^-		0,07 mg/l
Dissolved **oxygen**	O_2		No guideline
Fluoride	F	< 1,5 mg/l (up to 10)	1,5 mg/l
Hardness	mg/l $CaCO_3$		No guideline
Hydrogen sulfide	H_2S		No guideline
Iron	Fe	0,5 - 50 mg/l	No guideline
Lead	Pb		0,01 mg/l
Manganese	Mn		0,4 mg/l
Mercury	Hg	< 0,5 µg/l	0,006 mg/l
Molybdenum	Mb	< 0,01 mg/l	0,07 mg/l
Nickel	Ni	< 0,02 mg/l	0,07 mg/l
Nitrate and nitrite	NO_3, NO_2		50 mg/l and 3 mg/l
Turbidity			Not mentioned
pH			No guideline
Selenium	Se	< < 0,01 mg/l	0,01 mg/l
Silver	Ag	5 – 50 µg/l	No guideline

Sodium	Na	< 20 mg/l	No guideline
Sulfate	SO_4		No guideline
Inorganic tin	Sn		Not mentioned
TDS			No guideline
Uranium	U		0,015 mg/l
Zinc	Zn		No guideline

Organic compounds

Group	Substance		Formula	Health based guideline by the WHO
Chlorinated alkanes	Carbon tetrachloride		$C\,Cl_4$	4 µg/l
	Dichloromethane		$C\,H_2\,Cl_2$	20 µg/l
	1,1-Dichloroethane		$C_2\,H_4\,Cl_2$	No guideline
	1,2-Dichloroethane		$Cl\,CH_2\,CH_2\,Cl$	30 µg/l
	1,1,1-Trichloroethane		$CH_3\,C\,Cl_3$	No guideline
Chlorinated ethenes	1,1-Dichloroethene		$C_2\,H_2\,Cl_2$	No guideline
	1,2-Dichloroethene		$C_2\,H_2\,Cl_2$	50 µg/l
	Trichloroethene		$C_2\,H\,Cl_3$	20 µg/l
	Tetrachloroethene		$C_2\,Cl_4$	40 µg/l
Aromatic hydrocarbons	Benzene		$C_6\,H_6$	10 µg/l
	Toluene		$C_7\,H_8$	700 µg/l
	Xylenes		$C_8\,H_{10}$	500 µg/l
	Ethylbenzene		$C_8\,H_{10}$	300 µg/l
	Styrene		$C_8\,H_8$	20 µg/l
	Polynuclear Aromatic Hydrocarbons (PAHs)		$C_2\,H_3\,N_1\,O_5\,P_{1\,3}$	Not mentioned
Chlorinated benzenes	Monochlorobenzene (MCB)		$C_6\,H_5\,Cl$	No guideline
	Dichlorobenzenes (DCBs)	1,2-Dichlorobenzene (1,2-DCB)	$C_6\,H_4\,Cl_2$	1000 µg/l
		1,3-Dichlorobenzene (1,3-DCB)	$C_6\,H_4\,Cl_2$	No guideline
		1,4-Dichlorobenzene (1,4-DCB)	$C_6\,H_4\,Cl_2$	300 µg/l
	Trichlorobenzenes (TCBs)		$C_6\,H_3\,Cl_3$	No guideline
Miscellaneous organic constituents	Di(2-ethylhexyl)adipate (DEHA)		$C_{22}\,H_{42}\,O_4$	No guideline
	Di(2-ethylhexyl)phthalate (DEHP)		$C_{24}\,H_{38}\,O_4$	8 µg/l
	Acrylamide		$C_3\,H_5\,N\,O$	0.5 µg/l
	Epichlorohydrin (ECH)		$C_3\,H_5\,Cl\,O$	0.4 µg/l
	Hexachlorobutadiene (HCBD)		$C_4\,Cl_6$	0.6 µg/l
	Ethylenediaminetetraacetic acid		$C_{10}\,H_{12}\,N_2\,O_8$	600 µg/l

	(EDTA)			
	Nitrilotriacetic acid (NTA)		$N(CH_2COOH)_3$	200 µg/l
	Organotins	Dialkyltins	$R_2 Sn X_2$	No guideline
		Tributyltin oxide (TBTO)	$C_{24} H_{54} O Sn_2$	No guideline

Pesticides

Substance	Formula	Health based guideline by the WHO
Alachlor	$C_{14} H_{20} Cl N O_2$	20 µg/l
Aldicarb	$C_7 H_{14} N_2 O_4 S$	10 µg/l
Aldrin and dieldrin	$C_{12} H_8 Cl_6$/ $C_{12} H_8 Cl_6 O$	0.03 µg/l
Atrazine	$C_8 H_{14} Cl N_5$	2 µg/l
Bentazone	$C_{10} H_{12} N_2 O_3 S$	No guideline
Carbofuran	$C_{12} H_{15} N O_3$	7 µg/l
Chlordane	$C_{10} H_6 Cl_8$	0.2 µg/l
Chlorotoluron	$C_{10} H_{13} Cl N_2 O$	30 µg/l
DDT	$C_{14} H_9 Cl_5$	1 µg/l
1,2-Dibromo-3-chloropropane	$C_3 H_5 Br_2 Cl$	1 µg/l
2,4-Dichlorophenoxyacetic acid (2,4-D)	$C_8 H_6 Cl_2 O_3$	30 µg/l
1,2-Dichloropropane	$C_3 H_6 Cl_2$	40 µg/l
1,3-Dichloropropane	$C_3 H_6 Cl_2$	No guideline
1,3-Dichloropropene	$CH_3 CHClCH_2 Cl$	20 µg/l
Ethylene dibromide (EDB)	$Br CH_2 CH_2 Br$	Not mentioned
Heptachlor and heptachlor epoxide	$C_{10} H_5 Cl_7$	No guideline
Hexachlorobenzene (HCB)	$C_{10} H_5 Cl_7 O$	No guideline
Isoproturon	$C_{12} H_{18} N_2 O$	9 µg/l
Lindane	$C_6 H_6 Cl_6$	2 µg/l
MCPA	$C_9 H_9 Cl O_3$	2 µg/l
Methoxychlor	$(C_6H_4OCH_3)_2CHCCl_3$	20 µg/l
Metolachlor	$C_{15} H_{22} Cl N O_2$	10 µg/l
Molinate	$C_9 H_{17} N O S$	6 µg/l
Pendimethalin	$C_{13} H_{19} O_4 N_3$	20 µg/l
Pentachlorophenol (PCP)	$C_6 H Cl_5 O$	9 µg/l
Permethrin	$C_{21} H_{20} Cl_2 O_3$	300 µg/l
Propanil	$C_9 H_9 Cl_2 N O$	No guideline

Pyridate		$C_{19}H_{23}ClN_2O_2S$	No guideline
Simazine		$C_7 H_{12} Cl N_5$	2 µg/l
Trifluralin		$C_{13} H_{16} F_3 N_3 O_4$	20 µg/l
Chlorophenoxy herbicides (excluding 2,4-D and MCPA)	2,4-DB	$C_{10} H_{10} Cl_2 O_3$	90 µg/l
	Dichlorprop	$C_9 H_8 Cl_2 0_3$	100 µg/l
	Fenoprop	$C_9H_7Cl_3O_3$	9 µg/l
	MCPB	$C_{11} H_{13} Cl O_3$	No guideline
	Mecoprop	$C_{10}H_{11}ClO_3$	10 µg/l
	2,4,5-T	$C_8 H_5 Cl_3 O_3$	9 µg/l

Disinfectants and disinfectant by-products

Group	Substance		Formula	Health based guideline by the WHO
Disinfectants	Chloramines		$NH_nCl^{(3-n)}$, where n = 0, 1 or 2	Not mentioned
	Chlorine		Cl_2	5 mg/l
	Chlorine dioxide		ClO_2	No guideline
	Iodine		I_2	No guideline
Disinfectant by-products	Bromate		$Br O_3^-$	10 µg/l
	Chlorate		$Cl O_3^-$	70 µg/l
	Chlorite		$Cl O_2^-$	70 µg/l
	Chlorophenols	2-Chlorophenol (2-CP)	$C_6 H_5 Cl O$	No guideline
		2,4-Dichlorophenol (2,4-DCP)	$C_6 H_4 Cl_2 O$	No guideline
		2,4,6-Trichlorophenol (2,4,6-TCP)	$C_6 H_3 Cl_3 O$	200 µg/l
	Formaldehyde		HCHO	No guideline
	MX (3-Chloro-4-dichloromethyl-5-hydroxy-2(5H)-furanone)		$C_5 H_3 Cl_3 O_3$	No guideline
	Trihalomethanes	Bromoform	$C H Br_3$	100 µg/l
		Dibromochloromethane	$CH Br_2 Cl$	100 µg/l
		Bromodichloromethane	$CH Br Cl_2$	60 µg/l
		Chloroform	$CH Cl_3$	300 µg/l
	Chlorinated acetic acids	Monochloroacetic acid	$C_2 H_3 Cl O_2$	No guideline
		Dichloroacetic acid	$C_2 H_2 Cl_2 O_2$	50 µg/l
		Trichloroacetic acid	$C_2 H Cl_3 O_2$	20 µg/l
	Chloral hydrate (trichloroacetaldehyde)		$C Cl_3 CH(OH)_2$	No guideline
	Chloroacetones		$C_3 H_5 O Cl$	No guideline
	Halogenated acetonitriles	Dichloroacetonitrile	$C_2 H Cl_2 N$	20 µg/l
		Dibromoacetonitrile	$C_2 H Br_2 N$	70 µg/l
		Bromochloroacetonitrile	$CH Cl_2 CN$	No guideline
		Trichloroacetonitrile	$C_2 Cl_3 N$	No guideline
	Cyanogen chloride		Cl CN	70 µg/l
	Chloropicrin		$C Cl_3 NO_2$	No guideline

Attachment G

Typical Generator Shelter

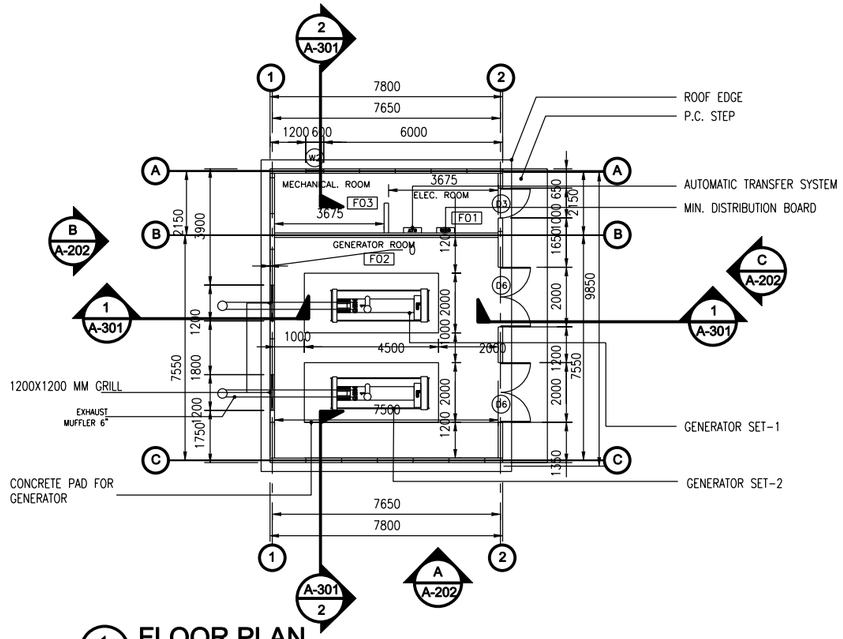

1 FLOOR PLAN
A-101 SCALE= 1:100

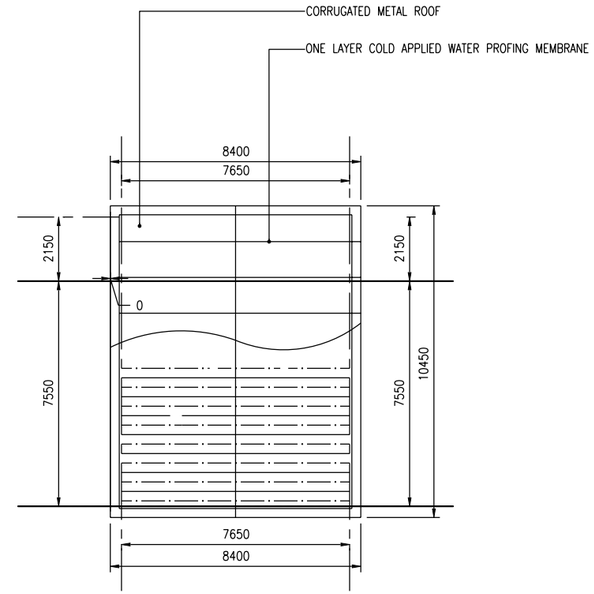

2 ROOF FLOOR PLAN
A-101 SCALE= 1:100

NOTES:

1. CONTRACTOR SHALL BE RESPONSIBLE FOR SIZING AND DESIGN OF ALL FACILITIES SHOWN. FACILITIES SHOWN ARE FOR ILLUSTRATIVE PURPOSES ONLY.

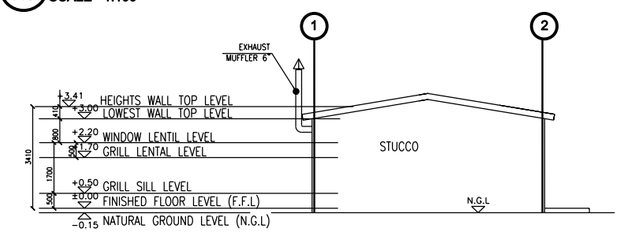

7 ELEVATION A
A-101 SCALE= 1:100

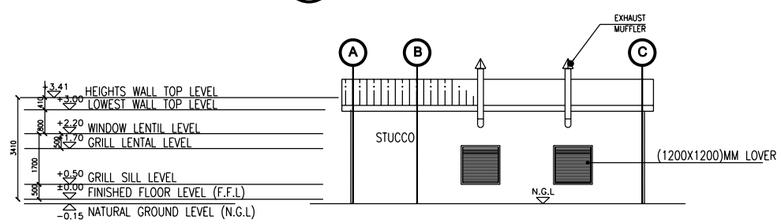

6 ELEVATION B
A-101 SCALE= 1:100

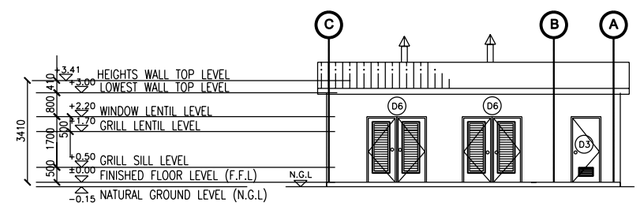

5 ELEVATION C
A-101 SCALE= 1:100

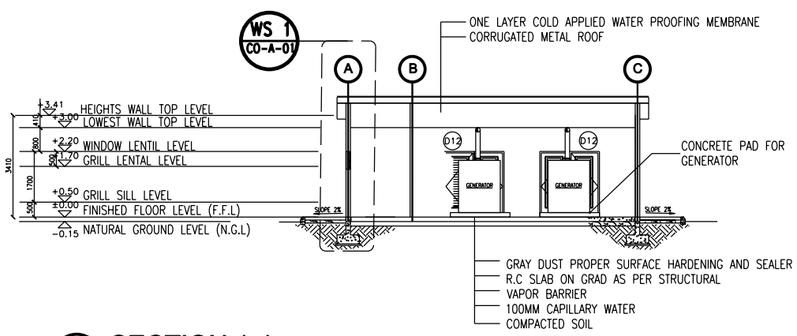

3 SECTION 1-1
A-101 SCALE= 1:100

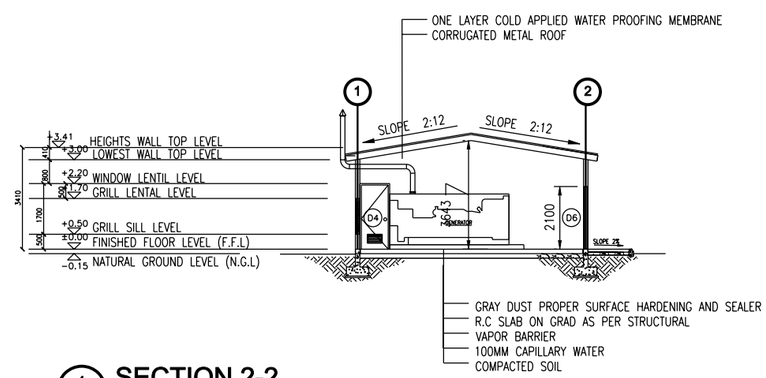

4 SECTION 2-2
A-101 SCALE= 1:100

Finishing Schedule Legend

Floor

F1	Clear Dust Proffer Surface Hardening Sealer
F2	200mmX200mm Terrazzo Tiles

Wall

W1	White Painted Plaster
W2	200mmX300mm glazed ceramic tiles up to 2000mm above F.F.L.

Ceiling

C1	White Painted Plaster

Finishing Schedule

Room	Usage	Floor	Wall	Ceiling
F01	ELEC. ROOM	F1	W1	C1
F02	GENERATOR ROOM	F1	W1	C1
F03	MECHANICAL ROOM	F1	W1	C1

Notes

1- ALL DIMENSIONS ARE IN MM UNLESS OTHERWISE SPECIFIED.
2- ALL LEVELS ARE IN METER (M) UNLESS OTHERWISE SPECIFIED
3- ALL WALLS ARE 290MM CMU MASONRY WALLS, (50MM SHOTCREAT BOTH SIDES AND 50MM INSULATION)
4- EXTERIOR WALLS TO BE COLORED STUCCO
5- ALL ROOFS ARE GAUGE 14 GALVANIZED STEEL CORRUGATED SHEETS

1 0 1 2 3 4 5 6 7 8 9
1:100

US ARMY CORPS OF ENGINEERS AFGHANISTAN ENGINEER DISTRICT

SYMBOL	DESCRIPTION	DATE	APV

DATE: XX-XX-XX
DESIGN FILE NO.
DRAWING CODE:
FILE NAME:
PLOT SCALE: AS SHOWN
CONTRACT NO. XXX-XX-XXX
REV. —

DESIGNED BY: AED
DWN BY: AED
CKD BY: AED
REVIEWED BY:
SUBMITTED BY:

U.S. ARMY CORPS OF ENGINEERS
AFGHANISTAN ENGINEER DISTRICT
APO AE 09356

ENGINEERING AND CONSTRUCTION DIVISION

STANDARD DESIGN
AFGHANISTAN

GENERATOR FACILITY FLOOR PLAN

SHEET REFERENCE NUMBER:
X-XXX
SHEET — OF —

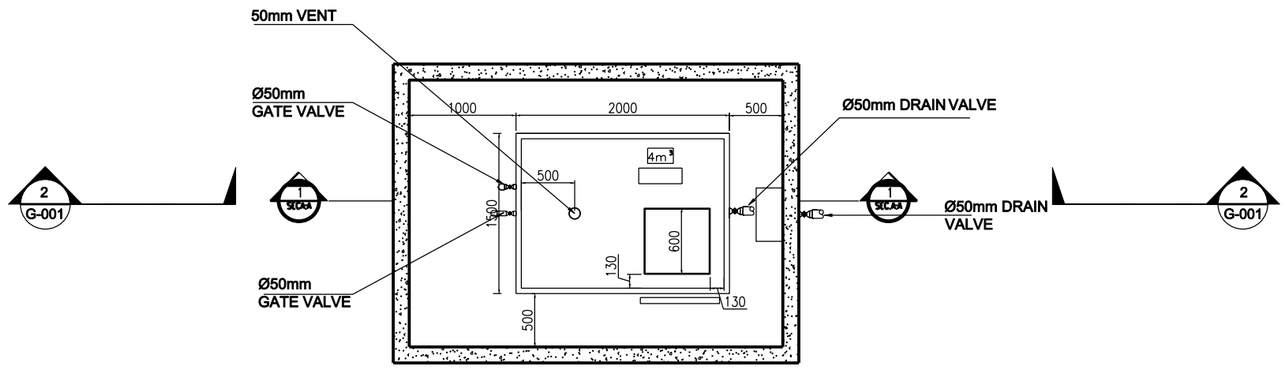

1 G-001 PLAN VIEW
NTS

NOTES:

1. FUEL TANKS SHALL PROVIDE SUFFICIENT STORAGE FOR 14 DAYS OF CONTINOUS GENERATOR OPERATION.

2. DESIGN SHOWN IS FOR ILLUSTRATIVE PURPOSES ONLY. THE CONTRACTOR SHALL BE RESPONSIBLE FOR SIZING AND DESIGN.

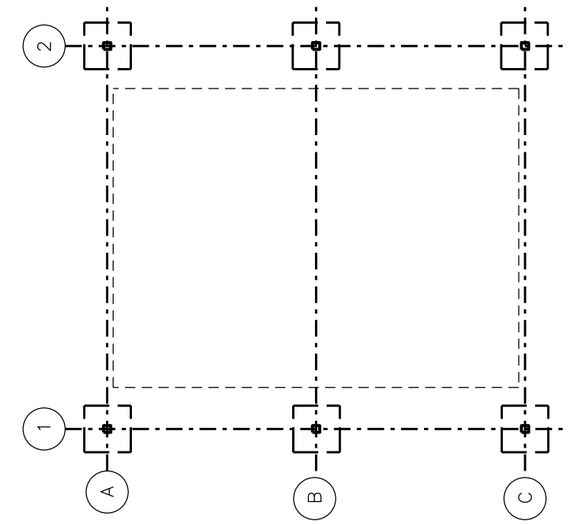

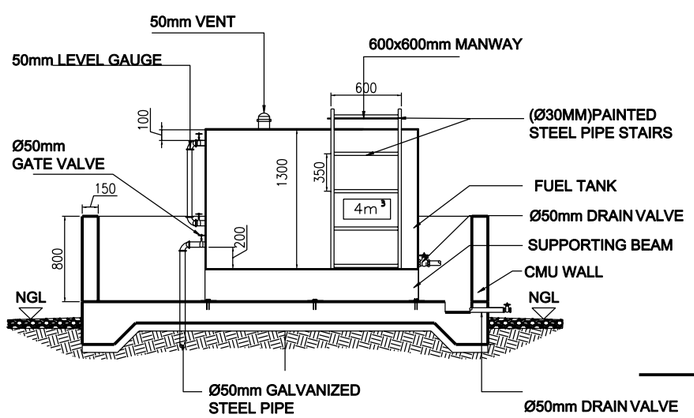

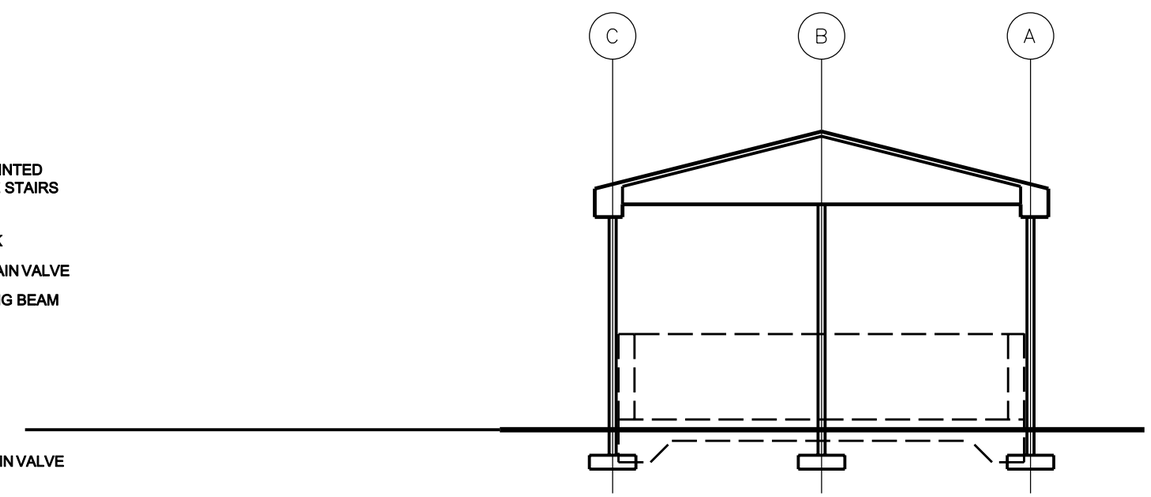

2 G-001 SECTION
NTS

US ARMY CORPS
OF ENGINEERS
AFGHANISTAN
ENGINEER DISTRICT

SYMBOL	DESCRIPTION	DATE	APV

DESIGNED BY: ASED
DWN BY: AED
CKD BY: AED
REVIEWED BY:
SUBMITTED BY:
DATE: XX-XX-XX
DESIGN FILE NO.
DRAWING CODE:
FILE NAME:
PLOT SCALE: AS SHOWN
CONTRACT NO. XXX-XX-XX
REV. —

U.S. ARMY CORPS OF ENGINEERS
AFGHANISTAN ENGINEER DISTRICT
APO AE 09356

ENGINEERING AND
CONSTRUCTION DIVISION

STANDARD DESIGN
AFGHANISTAN
FUEL STORAGE

SHEET
REFERENCE
NUMBER:
X-XXX