SOLICITATION, OFFER, AND AWARD *(Construction, Alteration, or Repair)*	1. SOLICITATION NO. W917PM-09-R-0032	2. TYPE OF SOLICITATION [ ] SEALED BID (IFB) [X] NEGOTIATED *(RFP)*	3. DATE ISSUED 17-Dec-2008	PAGE OF PAGES 1 OF 265

IMPORTANT - The "offer" section on the reverse must be fully completed by offeror.

4. CONTRACT NO.	5. REQUISITION/PURCHASE REQUEST NO.	6. PROJECT NO.

7. ISSUED BY CODE W917PM	8. ADDRESS OFFER TO *(If Other Than Item 7)* CODE
AFGHANISTAN ENGINEER DISTRICT US ARMY CORPS OF ENGINEERS KABUL APO AE 09356 TEL: FAX:	**See Item 7** TEL: FAX:

9. FOR INFORMATION CALL:	A. NAME MICHAEL T MCCONNELL	B. TELEPHONE NO. *(Include area code)* *(NO COLLECT CALLS)*

SOLICITATION

NOTE: In sealed bid solicitations "offer" and "offeror" mean "bid" and "bidder".

10. THE GOVERNMENT REQUIRES PERFORMANCE OF THE WORK DESCRIBED IN THESE DOCUMENTS *(Title, identifying no., date):*

Kandahar South Park Improvement

This project consists of design and construction of:

Project (1): Entry Control Point and Access Road, Access Road into South Park, guard stations, vehicle inspection area, site utilities, and anti-terrorism measures.
Project (2): Reception, Staging Onward Movement Integration (RSOI) surge area: Renovate open bay structure for mayor/admin office; site preparation, access roads, drainage work, and utility installation for RSOI structures and future Brigade Housing; construct pre-engineered buildings for 3,000 person surge; latrines and shower facilities.
Project (3): Demolish and relocate/construct a new Class I Yard: cold/frozen storage building, covered storage, office building, utilities, roads, drainage, parking, and fencing.

The Government intends to award one (1) Firm-Fixed Price contract resulting from this solicitation.

The magnitude of this effort is estimated between $25,000,000.00 and $100,000,000.00

The award for this project is Subject to the Availability of Funds.

The point of contact for this solicitation is Mr. Michael T. McConnell at email: michael.t.mcconnell@usace.army.mil

11. The Contractor shall begin performance within 7 calendar days and complete it within 360 calendar days after receiving [ ] award, [X] notice to proceed. This performance period is [X] mandatory, [ ] negotiable. *(See* 52.211-10 *.)*

12 A. THE CONTRACTOR MUST FURNISH ANY REQUIRED PERFORMANCE AND PAYMENT BONDS? *(If "YES," indicate within how many calendar days after award in Item 12B.)* [ ] YES [X] NO	12B. CALENDAR DAYS

13. ADDITIONAL SOLICITATION REQUIREMENTS:

A. Sealed offers in original and 4 copies to perform the work required are due at the place specified in Item 8 by 05:00 PM *(hour)* local time 27 Jan 2009 *(date).* If this is a sealed bid solicitation, offers must be publicly opened at that time. Sealed envelopes containing offers shall be marked to show the offeror's name and address, the solicitation number, and the date and time offers are due.

B. An offer guarantee [ ] is, [X] is not required.

C. All offers are subject to the (1) work requirements, and (2) other provisions and clauses incorporated in the solicitation in full text or by reference.

D. Offers providing less than 360 calendar days for Government acceptance after the date offers are due will not be considered and will be rejected.

SOLICITATION, OFFER, AND AWARD (Continued)

(Construction, Alteration, or Repair)

OFFER ***(Must be fully completed by offeror)***

14. NAME AND ADDRESS OF OFFEROR *(Include ZIP Code)*		15. TELEPHONE NO. *(Include area code)*
		16. REMITTANCE ADDRESS *(Include only if different than Item 14)* **See Item 14**
CODE	FACILITY CODE	

17. The offeror agrees to perform the work required at the prices specified below in strict accordance with the terms of this solicitation, if this offer is accepted by the Government in writing within _____ calendar days after the date offers are due. *(Insert any number equal to or greater than the minimum requirements stated in Item 13D. Failure to insert any number means the offeror accepts the minimum in Item 13D.)*

AMOUNTS	SEE SCHEDULE OF PRICES

18. The offeror agrees to furnish any required performance and payment bonds.

19. ACKNOWLEDGMENT OF AMENDMENTS

(The offeror acknowledges receipt of amendments to the solicitation -- give number and date of each)

AMENDMENT NO.										
DATE										

20A. NAME AND TITLE OF PERSON AUTHORIZED TO SIGN OFFER *(Type or print)*	20B. SIGNATURE	20C. OFFER DATE

AWARD ***(To be completed by Government)***

21. ITEMS ACCEPTED:

22. AMOUNT	23. ACCOUNTING AND APPROPRIATION DATA

24. SUBMIT INVOICES TO ADDRESS SHOWN IN *(4 copies unless otherwise specified)*	**ITEM**	25. OTHER THAN FULL AND OPEN COMPETITION PURSUANT TO ☐ 10 U.S.C. 2304(c) ☐ 41 U.S.C. 253(c)
26. ADMINISTERED BY CODE		27. PAYMENT WILL BE MADE BY: CODE

CONTRACTING OFFICER WILL COMPLETE ITEM 28 OR 29 AS APPLICABLE

☐ 28. NEGOTIATED AGREEMENT *(Contractor is required to sign this document and return _ _ copies to issuing office.)* Contractor agrees to furnish and deliver all items or perform all work, requisitions identified on this form and any continuation sheets for the consideration stated in this contract. The rights and obligations of the parties to this contract shall be governed by (a) this contract award, (b) the solicitation, and (c) the clauses, representations, certifications, and specifications or incorporated by reference in or attached to this contract.

☐ 29. AWARD *(Contractor is not required to sign this document.)* Your offer on this solicitation, is hereby accepted as to the items listed. This award consummates the contract, which consists of (a) the Government solicitation and your offer, and (b) this contract award. No further contractual document is necessary.

30A. NAME AND TITLE OF CONTRACTOR OR PERSON AUTHORIZED TO SIGN *(Type or print)*		31A. NAME OF CONTRACTING OFFICER *(Type or print)* TEL: EMAIL:
30B. SIGNATURE	30C. DATE	31B. UNITED STATES OF AMERICA BY
		31C. AWARD DATE

SECTION 00010

SECTION 00010
PROPOSAL SCHEDULE FOR SOUTH PARK IMPROVEMENTS PROJECT

Provide a price for all items, including those labeled, "Optional Items." The Government will evaluate the Contractor's entire proposal to determine which CLINs represent the best value to the Government.

1. Base Bid Items Proposal for RSOI Barracks, MWR and ECP Facilities:

No.	*Description*	*Qty*	*Unit*	*Unit Price*	*Total Amount*
0001	Mob/Demobilization	1	LS	xxx	$_____
0002	Design	1	LS	xxx	$_____
0003	Construct Barracks Bldgs (2)	1	LS	xxx	$_____
0003AA	Construct MWR/Admin/Training Fac (1)	1	LS	xxx	$_____
0004	Construct Electrical Generators	1	LS	xxx	$_____
0005	Construct Utilities	1	LS	xxx	$_____
0006	Construct Roads/Walkways	1	LS	xxx	$_____
0007	Site Improvement/Demolition	1	LS	xxx	$_____
0007AA	Topographical Survey	1	LS	xxx	$_____
0007AB	Geo-technical Investigation	1	LS	xxx	$_____
0007AC	Other Site Work and Demo	1	LS	xxx	$_____
0008	Construct Info System Ducts (Ext)	1	LS	xxx	$_____
0009	As-Built Drawings	1	LS	NTE (Not to Exceed)	**$20,000**

Sub-Total Base Program: **$**_____
(Including NTE Amount)

2. Optional Bid Items

0010	Construct ½ Barracks #3	1	LS	xxx	$_____
00010AA	Construct ½ Barracks # 3	1	LS	xxx	$_____

Sub-Total Optional Program: **$**_____

TOTAL PROPOSAL FOR ITEM # 1: **$**_____
(total of all above costs – Base and all Options including NTE)

2. Base Bid Items Proposal for Entry Control Point (ECP)

No.	*Description*	*Qty*	*Unit*	*Unit Price*	*Total Amount*
0001	Mob/Demobilization	1	LS	xxx	$_____
0002	Design	1	LS	xxx	$_____
0003	Construct Control Entry Point	1	LS	xxx	$_____
0003AA	Construct Vehicle Inspection/Shade Scr	1	LS	xxx	$_____
0003AB	Construct Driver Waiting Area	1	LS	xxx	$_____
0003AC	Construct Truck Scan & Access Fac	1	LS	xxx	$_____
0003AD	Construct Guard Force Bldg	1	LS	xxx	$_____
0003AE	Construct Kennels	1	LS	xxx	$_____

0003AF	Construct Contractor Waiting Area	1	LS	xxx	$_____
0003AG	Construct Fencing & Walls	1	LS	xxx	$_____
0003AH	Construct Barriers & Walls	1	LS	xxx	$_____
0003AI	Construct Gravel Roads & Parking	1	LS	xxx	$_____
0003AJ	Construct Pop-Up Barriers/Drop Arms	1	LS	xxx	$_____
0003AK	Construct Wadi Crossing	1	LS	xxx	$_____
0004	Construct Guard Towers	1	LS	xxx	$_____
0005	Access Road	1	LS	xxx	$_____
0006	Site Electrical Work	1	LS	xxx	$_____
0007	Site Water & Sewer Work	1	LS	xxx	$_____
0008	Site Storm Drainage Work	1	LS	xxx	$_____
0009	Topographic Survey	1	LS	xxx	$_____
0010	As-Built Drawings	1	LS	NTE	**$20,000**
				(Not to Exceed)	

Sub-Total Base Program: **$**_____
(Including NTE Amount)

2. Optional Bid Items

0011	Site Communications Work	1	LS	xxx	$_____
0012	Asphalt Pavement Access Road	1	LS	xxx	$_____
0013	Asphalt Pavement Areas in ECP area	1	LS	xxx	$_____

Sub-Total Optional Program: **$**_____

TOTAL PROPOSAL FOR ITEM # 2: **$**_____
(total of all above costs – Base and all Options including NTE)

No.	***Description***	***Qty***	***Unit***	***Unit Price***	***Total Amount***

3. OPTIONAL Bid Items Proposal for Class I Warehouse Yard

0001	Mob/Demobilization	1	LS	xxx	$_____
0002	Design	1	LS	xxx	$_____
0003	Construct Warehouse Freezer Bldg	1	LS	xxx	$_____
0004	Construct Yard Office & Driver Facility	1	LS	xxx	$_____
0005	Construct Storage Yard Facility # 1	1	LS	xxx	$_____
0005AA	Construct Storage Yard Facility # 2	1	LS	xxx	$_____
0005AB	Construct Storage Yard Facility # 3	1	LS	xxx	$_____
0006	Site Electrical Work	1	LS	xxx	$_____
0007	Site Utilities (Water, FP & Sewer)	1	LS	xxx	$_____
0008	Gravel Surfacing Storage Yard	1	LS	xxx	$_____
0009	Relocate Refrigerated Bldg	1	LS	xxx	$_____
0010	Relocate Shelters (2)	1	LS	xxx	$_____
0011	Storm Drainage & Site Improvements	1	LS	xxx	$_____
0011AA	Storm Drainage	1	LS	xxx	$_____
0011AB	Site Improvements	1	LS	xxx	$_____
0011AC	Topographic Survey	1	LS	xxx	$_____
0011AD	Geotechnical Investigations	1	LS	xxx	$_____
0012	Construct Info Systems Duct (Exterior)	1	LS	xxx	$_____
0013	As-Built Drawings	1	LS	NT	**$20,000**
				(Not to Exceed)	

Sub-Total Base Program: **$_____**
(Including NTE Amount)

2. Optional Bid Items to the Bid Option

0014	Construct Covered Storage # 1	1	LS	xxx	$_____
0015	Construct Covered Storage # 2	1	LS	xxx	$_____
0016	Construct Covered Storage # 3	1	LS	xxx	$_____

Sub-Total Optional Program: **$_____**

TOTAL PROPOSAL FOR OPTIONAL ITEM # 3: **$_____**
(total of all above costs – Base and all Options including NTE)

TOTAL PROPOSAL FOR ALL ITEMS: **$_____**
(total of all above costs – Base and all Options including NTE)

PROPOSAL SCHEDULE NOTES

1. Offeror shall submit prices on all items. Scope of work on each items are described in Section 01010.

2. Only one contract for the entire schedule will be awarded under this solicitation. This project will be awarded as a lump sum contract. This Proposal Schedule is an accounting tool for allocating funds to applicable budget.

3. Costs associated with this project shall include design and construction costs, site development, and utility installation.

4. DESIGN COSTS DEFINITION: Design costs shall consist of design analysis, drawings, and specifications of all facilities.

5. COST LIMITATION: The established design cost limitation for all Design Costs, as defined in paragraph 4, shall not exceed 6 percent of the total construction cost.

6. The government has the right to reduce the number of units in a bid item or choose to delete a base bit item entirely if necessary after the proposals are received.

7. EVALUATION OF OPTIONS: The award will be made to the offeror whose proposal represents the best overall value to the Government. For pricing purposes the Government will evaluate both the Base Proposals and Option Proposals. The Government is not obligated to exercise the options.

8. EXERCISE OF OPTIONAL BID ITEMS: Optional bid items may, at the option of the Government, be added to the contract at any time within 120 calendar days after receipt of the notice to proceed for Base Proposal.

9. ORDER of WORK: The following order of work shall apply before start of optional bid items:
All base bid contract line items have priority.

10. Period of performance is 360 calendar days from receipt of notice to proceed for the base and for all optional items; Liquidated damages are assessed at $3,850.00 per day for every day of delay past the period of performance of 360 calendar days until contract completion for either the Base Items or the Optional Items whichever is applicable.

-END OF SECTION-

DELIVERY INFORMATION

CLIN	DELIVERY DATE	QUANTITY	SHIP TO ADDRESS	UIC

Section 00100 - Bidding Schedule/Instructions to Bidders

CLAUSES INCORPORATED BY REFERENCE

52.215-20	Requirements for Cost or Pricing Data or Information Other Than Cost or Pricing Data	OCT 1997
52.236-28	Preparation of Proposals--Construction	OCT 1997
252.204-7001	Commercial And Government Entity (CAGE) Code Reporting	AUG 1999

CLAUSES INCORPORATED BY FULL TEXT

52.204-6 DATA UNIVERSAL NUMBERING SYSTEM (DUNS) NUMBER (APR 2008)

(a) The offeror shall enter, in the block with its name and address on the cover page of its offer, the annotation “DUNS” or “DUNS+4” followed by the DUNS number or “DUNS+4” that identifies the offeror's name and address exactly as stated in the offer. The DUNS number is a nine-digit number assigned by Dun and Bradstreet, Inc. The DUNS+4 is the DUNS number plus a 4-character suffix that may be assigned at the discretion of the offeror to establish additional CCR records for identifying alternative Electronic Funds Transfer (EFT) accounts (see Subpart 32.11) for the same concern.

(b) If the offeror does not have a DUNS number, it should contact Dun and Bradstreet directly to obtain one.

(1) An offeror may obtain a DUNS number--

(i) Via the Internet at http://fedgov.dnb.com/webform or if the offeror does not have internet access, it may call Dun and Bradstreet at 1-866-705-5711 if located within the United States; or

(ii) If located outside the United States, by contacting the local Dun and Bradstreet office. The offeror should indicate that it is an offeror for a U.S. Government contract when contacting the local Dun and Bradstreet office.

(2) The offeror should be prepared to provide the following information:

(i) Company legal business name.

(ii) Tradestyle, doing business, or other name by which your entity is commonly recognized.

(iii) Company physical street address, city, state and Zip Code.

(iv) Company mailing address, city, state and Zip Code (if separate from physical).

(v) Company telephone number.

(vi) Date the company was started.

(vii) Number of employees at your location.

(viii) Chief executive officer/key manager.

(ix) Line of business (industry).

(x) Company Headquarters name and address (reporting relationship within your entity).

(End of provision)

CLAUSES INCORPORATED BY FULL TEXT

52.214-34 SUBMISSION OF OFFERS IN THE ENGLISH LANGUAGE (APR 1991)

Offers submitted in response to this solicitation shall be in the English language. Offers received in other than English shall be rejected.

(End of provision)

CLAUSES INCORPORATED BY FULL TEXT

52.214-35 SUBMISSION OF OFFERS IN U.S. CURRENCY (APR 1991)

Offers submitted in response to this solicitation shall be in terms of U.S. dollars. Offers received in other than U.S. dollars shall be rejected.

(End of provision)

CLAUSES INCORPORATED BY FULL TEXT

52.214-5000 APPARENT CLERICAL MISTAKES (MAR 1995)--EFARS

(a) For the purpose of initial evaluations of bids, the following will be utilized in the resolving arithmetic discrepancies found on the face of bidding schedule as submitted by the bidder:

(1) Obviously misplaced decimal points will be corrected;

(2) Discrepancy between unit price and extended price, the unit price will govern;

(3) Apparent errors in extension of unit prices will be corrected;

(4) Apparent errors in addition of lump-sum and extended prices will be corrected.

(b) For the purpose of bid evaluation, the government will proceed on the assumption that the bidder intends his bid to be evaluated on basis of the unit prices, the totals arrived at by resolution of arithmetic discrepancies as provided above and the bid will be so reflected on the abstract of bids.

(c) These correction procedures shall not be used to resolve any ambiguity concerning which bid is low.

(End of statement)

CLAUSES INCORPORATED BY FULL TEXT

52.215-1 INSTRUCTIONS TO OFFERORS--COMPETITIVE ACQUISITION (JAN 2004)

(a) Definitions. As used in this provision--

“Discussions” are negotiations that occur after establishment of the competitive range that may, at the Contracting Officer's discretion, result in the offeror being allowed to revise its proposal.

“In writing or written” means any worded or numbered expression which can be read, reproduced, and later communicated, and includes electronically transmitted and stored information.

“Proposal modification” is a change made to a proposal before the solicitation's closing date and time, or made in response to an amendment, or made to correct a mistake at any time before award.

“Proposal revision” is a change to a proposal made after the solicitation closing date, at the request of or as allowed by a Contracting Officer as the result of negotiations.

“Time”, if stated as a number of days, is calculated using calendar days, unless otherwise specified, and will include Saturdays, Sundays, and legal holidays. However, if the last day falls on a Saturday, Sunday, or legal holiday, then the period shall include the next working day.

(b) Amendments to solicitations. If this solicitation is amended, all terms and conditions that are not amended remain unchanged. Offerors shall acknowledge receipt of any amendment to this solicitation by the date and time specified in the amendment(s).

(c) Submission, modification, revision, and withdrawal of proposals. (1) Unless other methods (e.g., electronic commerce or facsimile) are permitted in the solicitation, proposals and modifications to proposals shall be submitted in paper media in sealed envelopes or packages (i) addressed to the office specified in the solicitation, and (ii) showing the time and date specified for receipt, the solicitation number, and the name and address of the offeror. Offerors using commercial carriers should ensure that the proposal is marked on the outermost wrapper with the information in paragraphs (c)(1)(i) and (c)(1)(ii) of this provision.

(2) The first page of the proposal must show--

(i) The solicitation number;

(ii) The name, address, and telephone and facsimile numbers of the offeror (and electronic address if available);

(iii) A statement specifying the extent of agreement with all terms, conditions, and provisions included in the solicitation and agreement to furnish any or all items upon which prices are offered at the price set opposite each item;

(iv) Names, titles, and telephone and facsimile numbers (and electronic addresses if available) of persons authorized to negotiate on the offeror's behalf with the Government in connection with this solicitation; and

(v) Name, title, and signature of person authorized to sign the proposal. Proposals signed by an agent shall be accompanied by evidence of that agent's authority, unless that evidence has been previously furnished to the issuing office.

(3) Submission, modification, or revision, of proposals.

(i) Offerors are responsible for submitting proposals, and any modifications, or revisions, so as to reach the Government office designated in the solicitation by the time specified in the solicitation. If no time is specified in the solicitation, the time for receipt is 4:30 p.m., local time, for the designated Government office on the date that proposal or revision is due.

(ii)(A) Any proposal, modification, or revision received at the Government office designated in the solicitation after the exact time specified for receipt of offers is “late” and will not be considered unless it is received before award is made, the Contracting Officer determines that accepting the late offer would not unduly delay the acquisition; and--

(1) If it was transmitted through an electronic commerce method authorized by the solicitation, it was received at the initial point of entry to the Government infrastructure not later than 5:00 p.m. one working day prior to the date specified for receipt of proposals; or

(2) There is acceptable evidence to establish that it was received at the Government installation designated for receipt of offers and was under the Government's control prior to the time set for receipt of offers; or

(3) It is the only proposal received.

(B) However, a late modification of an otherwise successful proposal that makes its terms more favorable to the Government, will be considered at any time it is received and may be accepted.

(iii) Acceptable evidence to establish the time of receipt at the Government installation includes the time/date stamp of that installation on the proposal wrapper, other documentary evidence of receipt maintained by the installation, or oral testimony or statements of Government personnel.

(iv) If an emergency or unanticipated event interrupts normal Government processes so that proposals cannot be received at the office designated for receipt of proposals by the exact time specified in the solicitation, and urgent Government requirements preclude amendment of the solicitation, the time specified for receipt of proposals will be deemed to be extended to the same time of day specified in the solicitation on the first work day on which normal Government processes resume.

(v) Proposals may be withdrawn by written notice received at any time before award. Oral proposals in response to oral solicitations may be withdrawn orally. If the solicitation authorizes facsimile proposals, proposals may be withdrawn via facsimile received at any time before award, subject to the conditions specified in the provision at 52.215-5, Facsimile Proposals. Proposals may be withdrawn in person by an offeror or an authorized representative, if the identity of the person requesting withdrawal is established and the person signs a receipt for the proposal before award.

(4) Unless otherwise specified in the solicitation, the offeror may propose to provide any item or combination of items.

(5) Offerors shall submit proposals in response to this solicitation in English, unless otherwise permitted by the solicitation, and in U.S. dollars, unless the provision at FAR 52.225-17, Evaluation of Foreign Currency Offers, is included in the solicitation.

(6) Offerors may submit modifications to their proposals at any time before the solicitation closing date and time, and may submit modifications in response to an amendment, or to correct a mistake at any time before award.

(7) Offerors may submit revised proposals only if requested or allowed by the Contracting Officer.

(8) Proposals may be withdrawn at any time before award. Withdrawals are effective upon receipt of notice by the Contracting Officer.

(d) Offer expiration date. Proposals in response to this solicitation will be valid for the number of days specified on the solicitation cover sheet (unless a different period is proposed by the offeror).

(e) Restriction on disclosure and use of data. Offerors that include in their proposals data that they do not want disclosed to the public for any purpose, or used by the Government except for evaluation purposes, shall--

(1) Mark the title page with the following legend: This proposal includes data that shall not be disclosed outside the Government and shall not be duplicated, used, or disclosed--in whole or in part--for any purpose other than to evaluate this proposal. If, however, a contract is awarded to this offeror as a result of--or in connection with-- the submission of this data, the Government shall have the right to duplicate, use, or disclose the data to the extent provided in the resulting contract. This restriction does not limit the Government's right to use information

contained in this data if it is obtained from another source without restriction. The data subject to this restriction are contained in sheets [insert numbers or other identification of sheets]; and

(2) Mark each sheet of data it wishes to restrict with the following legend: Use or disclosure of data contained on this sheet is subject to the restriction on the title page of this proposal.

(f) Contract award. (1) The Government intends to award a contract or contracts resulting from this solicitation to the responsible offeror(s) whose proposal(s) represents the best value after evaluation in accordance with the factors and subfactors in the solicitation.

(2) The Government may reject any or all proposals if such action is in the Government's interest.

(3) The Government may waive informalities and minor irregularities in proposals received.

(4) The Government intends to evaluate proposals and award a contract without discussions with offerors (except clarifications as described in FAR 15.306(a)). Therefore, the offeror's initial proposal should contain the offeror's best terms from a cost or price and technical standpoint. The Government reserves the right to conduct discussions if the Contracting Officer later determines them to be necessary. If the Contracting Officer determines that the number of proposals that would otherwise be in the competitive range exceeds the number at which an efficient competition can be conducted, the Contracting Officer may limit the number of proposals in the competitive range to the greatest number that will permit an efficient competition among the most highly rated proposals.

(5) The Government reserves the right to make an award on any item for a quantity less than the quantity offered, at the unit cost or prices offered, unless the offeror specifies otherwise in the proposal.

(6) The Government reserves the right to make multiple awards if, after considering the additional administrative costs, it is in the Government's best interest to do so.

(7) Exchanges with offerors after receipt of a proposal do not constitute a rejection or counteroffer by the Government.

(8) The Government may determine that a proposal is unacceptable if the prices proposed are materially unbalanced between line items or subline items. Unbalanced pricing exists when, despite an acceptable total evaluated price, the price of one or more contract line items is significantly overstated or understated as indicated by the application of cost or price analysis techniques. A proposal may be rejected if the Contracting Officer determines that the lack of balance poses an unacceptable risk to the Government.

(9) If a cost realism analysis is performed, cost realism may be considered by the source selection authority in evaluating performance or schedule risk.

(10) A written award or acceptance of proposal mailed or otherwise furnished to the successful offeror within the time specified in the proposal shall result in a binding contract without further action by either party.

(11) If a post-award debriefing is given to requesting offerors, the Government shall disclose the following information, if applicable:

(i) The agency's evaluation of the significant weak or deficient factors in the debriefed offeror's offer.

(ii) The overall evaluated cost or price and technical rating of the successful and the debriefed offeror and past performance information on the debriefed offeror.

(iii) The overall ranking of all offerors, when any ranking was developed by the agency during source selection.

(iv) A summary of the rationale for award.

(v) For acquisitions of commercial items, the make and model of the item to be delivered by the successful offeror.

(vi) Reasonable responses to relevant questions posed by the debriefed offeror as to whether source-selection procedures set forth in the solicitation, applicable regulations, and other applicable authorities were followed by the agency.

(End of provision)

CLAUSES INCORPORATED BY FULL TEXT

52.216-1 TYPE OF CONTRACT (APR 1984)

The Government contemplates award of a Firm-Fixed Price contract resulting from this solicitation.

(End of provision)

CLAUSES INCORPORATED BY FULL TEXT

52.230-1 COST ACCOUNTING STANDARDS NOTICES AND CERTIFICATION (OCT 2008)

Note: This notice does not apply to small businesses or foreign governments. This notice is in three parts, identified by Roman numerals I through III.

Offerors shall examine each part and provide the requested information in order to determine Cost Accounting Standards (CAS) requirements applicable to any resultant contract.

If the offeror is an educational institution, Part II does not apply unless the contemplated contract will be subject to full or modified CAS coverage pursuant to 48 CFR 9903.201-2(c)(5) or 9903.201-2(c)(6), respectively.

I. DISCLOSURE STATEMENT--COST ACCOUNTING PRACTICES AND CERTIFICATION

(a) Any contract in excess of $650,000 resulting from this solicitation will be subject to the requirements of the Cost Accounting Standards Board (48 CFR Chapter 99), except for those contracts which are exempt as specified in 48 CFR 9903.201-1.

(b) Any offeror submitting a proposal which, if accepted, will result in a contract subject to the requirements of 48 CFR Chapter 99 must, as a condition of contracting, submit a Disclosure Statement as required by 48 CFR 9903.202. When required, the Disclosure Statement must be submitted as a part of the offeror's proposal under this solicitation unless the offeror has already submitted a Disclosure Statement disclosing the practices used in connection with the pricing of this proposal. If an applicable Disclosure Statement has already been submitted, the offeror may satisfy the requirement for submission by providing the information requested in paragraph (c) of Part I of this provision.

CAUTION: In the absence of specific regulations or agreement, a practice disclosed in a Disclosure Statement shall not, by virtue of such disclosure, be deemed to be a proper, approved, or agreed-to practice for pricing proposals or accumulating and reporting contract performance cost data.

(c) Check the appropriate box below:

(1) Certificate of Concurrent Submission of Disclosure Statement.

The offeror hereby certifies that, as a part of the offer, copies of the Disclosure Statement have been submitted as follows: (i) original and one copy to the cognizant Administrative Contracting Officer (ACO) or cognizant Federal agency official authorized to act in that capacity (Federal official), as applicable, and (ii) one copy to the cognizant Federal auditor.

(Disclosure must be on Form No. CASB DS-1 or CASB DS-2, as applicable. Forms may be obtained from the cognizant ACO or Federal official and/or from the loose-leaf version of the Federal Acquisition Regulation.)

Date of Disclosure Statement: _____ Name and Address of Cognizant ACO or Federal Official Where Filed: _____

The offeror further certifies that the practices used in estimating costs in pricing this proposal are consistent with the cost accounting practices disclosed in the Disclosure Statement.

(2) Certificate of Previously Submitted Disclosure Statement.

The offeror hereby certifies that the required Disclosure Statement was filed as follows:

Date of Disclosure Statement: _____ Name and Address of Cognizant ACO or Federal Official Where Filed: _____

The offeror further certifies that the practices used in estimating costs in pricing this proposal are consistent with the cost accounting practices disclosed in the applicable Disclosure Statement.

(3) Certificate of Monetary Exemption.

The offeror hereby certifies that the offeror, together with all divisions, subsidiaries, and affiliates under common control, did not receive net awards of negotiated prime contracts and subcontracts subject to CAS totaling more than $50 million (of which at least one award exceeded $1 million) in the cost accounting period immediately preceding the period in which this proposal was submitted. The offeror further certifies that if such status changes before an award resulting from this proposal, the offeror will advise the Contracting Officer immediately.

(4) Certificate of Interim Exemption.

The offeror hereby certifies that (i) the offeror first exceeded the monetary exemption for disclosure, as defined in (3) of this subsection, in the cost accounting period immediately preceding the period in which this offer was submitted and (ii) in accordance with 48 CFR 9903.202-1, the offeror is not yet required to submit a Disclosure Statement. The offeror further certifies that if an award resulting from this proposal has not been made within 90 days after the end of that period, the offeror will immediately submit a revised certificate to the Contracting Officer, in the form specified under subparagraph (c)(1) or (c)(2) of Part I of this provision, as appropriate, to verify submission of a completed Disclosure Statement.

CAUTION: Offerors currently required to disclose because they were awarded a CAS-covered prime contract or subcontract of $50 million or more in the current cost accounting period may not claim this exemption (4). Further, the exemption applies only in connection with proposals submitted before expiration of the 90-day period following the cost accounting period in which the monetary exemption was exceeded.

II. COST ACCOUNTING STANDARDS--ELIGIBILITY FOR MODIFIED CONTRACT COVERAGE

If the offeror is eligible to use the modified provisions of 48 CFR 9903.201-2(b) and elects to do so, the offeror shall indicate by checking the box below. Checking the box below shall mean that the resultant contract is subject to the Disclosure and Consistency of Cost Accounting Practices clause in lieu of the Cost Accounting Standards clause.

( ) The offeror hereby claims an exemption from the Cost Accounting Standards clause under the provisions of 48 CFR 9903.201-2(b) and certifies that the offeror is eligible for use of the Disclosure and Consistency of Cost Accounting Practices clause because during the cost accounting period immediately preceding the period in which this proposal was submitted, the offeror received less than $50 million in awards of CAS-covered prime contracts and subcontracts. The offeror further certifies that if such status changes before an award resulting from this proposal, the offeror will advise the Contracting Officer immediately.

CAUTION: An offeror may not claim the above eligibility for modified contract coverage if this proposal is expected to result in the award of a CAS-covered contract of $50 million or more or if, during its current cost accounting period, the offeror has been awarded a single CAS-covered prime contract or subcontract of $25 million or more.

III. ADDITIONAL COST ACCOUNTING STANDARDS APPLICABLE TO EXISTING CONTRACTS

The offeror shall indicate below whether award of the contemplated contract would, in accordance with subparagraph (a)(3) of the Cost Accounting Standards clause, require a change in established cost accounting practices affecting existing contracts and subcontracts.

( ) YES ( ) NO

(End of clause)

CLAUSES INCORPORATED BY FULL TEXT

52.233-2 SERVICE OF PROTEST (SEP 2006)

(a) Protests, as defined in section 33.101 of the Federal Acquisition Regulation, that are filed directly with an agency, and copies of any protests that are filed with the Government Accountability Office (GAO), shall be served on the Contracting Officer (addressed as follows) by obtaining written and dated acknowledgment of receipt from US Army Corps of Engineers, House 1, Street 1, West Wazir Akbar Khan (bihind Aman High School), Kabul, Afghanistan.

(b) The copy of any protest shall be received in the office designated above within one day of filing a protest with the GAO.

(End of provision)

SECTION 00110
OTHER CONSTRUCTION – BEST VALUE

PROPOSAL PREPARATION

1. INQUIRIES

Perspective offerors should submit inquiries related to this solicitation by writing or calling the following (collect calls will not be accepted):

All questions will be submitted in writing by letter or e-mail to:

U.S. Army Corps of Engineers (USACE)
Afghanistan Engineer District (AED)
Qalaa House, Attention: Michael T. McConnell
Kabul, Afghanistan

E-MAIL ADDRESS: michael.t.mcconnell@usace.army.mil
Cell Phone : 079-686-7991

Please include the solicitation number, and project title with your questions. Written inquiries must be received by this office not later than 4 calendar days prior to the date set for receipt of offers.

Oral explanations or instructions are not binding. Any information given to an offeror which impacts the solicitation and/or offer will be given in the form of a written amendment to the solicitation.

As this is a competitive negotiation acquisition, there is no public bid opening and no information will be given out as to the number of offerors or the results of the competition until all awards are made.

2. DIRECTIONS FOR SUBMITTING PROPOSALS

Offers must be in sealed envelopes/packages, marked and addressed as follows:

MARK PACKAGES:
Solicitation No. W917PM-08-R-0032
Offer Closing Date: 25 Jan 2009
Offer Closing Time: 5:00 PM
(LOCAL KABUL TIME)

ADDRESS PACKAGES TO:
U.S. Army Corps of Engineers (USACE)
Afghanistan Engineer District (AED)
Qalaa House, Attention: Michael T. McConnell

Kabul, Afghanistan

Special Instruction Pertaining to Hand Carried Offers: Hand-carried offers must be delivered to the USACE AED offices, Qalaa House, Kabul, Afghanistan. Offers who desire to hand-deliver their offers notify the Contract Specialist **in advance** in order to be met at the entrance gate to Qalaa House Compound.

3. PREPROPOSAL CONFERENCE / SITE VISIT
The Site Visit shall be held at the Kandahar Resident Office. Point of contact for base access is:

David A. Eagle, USACE
Resident Engineer
Kandahar Resident Office
Office: 540.722.4723
DSN: 312.265.4723
DSN Cell: 318.841.7960
Comm. Cell: 079.768.0349
E-Mail: david.a.eagle@usace.army.mil

The site visit is scheduled for Sunday, 28 Dec 2008 at 10:00 local time.

IMPORTANT NOTES. (1) Remarks and explanations addressed during the conference shall not qualify or alter the terms and conditions of the solicitation. (2) The terms and conditions of the solicitation remain unchanged unless the solicitation is formally amended in writing.

4. TELEGRAPHIC OFFERS - - TELEGRAPHIC OFFERS ARE NOT ACCEPTABLE. However, offers may be withdrawn by written or telegraphic notice. Any telegram to withdraw an offer sent to this office must be received in the office designated in the Request for Proposal (RFP) for receipt of offers not later than the exact date and time set for receipt of proposals. A telegraphic withdrawal of an offer received in such office by telephone from the receiving telegraph office not later than the exact date and time set for receipt of proposals shall be considered. However, the telephone message shall be confirmed by the telegraph company by sending a copy of the written telegram that formed the basis for the telephone call. The written telegram shall be sealed in an envelope by a proper official and sent to the office designated in the RFP for receipt of offers. The official shall write on the envelope (1) the date and time of receipt and by whom, and (2) the number of the RFP, and shall sign the envelope. The offeror is responsible to inform the telegraph company of these requirements. No one from this office will be dispatched to the local telegraph office to pick up any telegram for any reason.

5. FACSIMILE OFFERS
Facsimile offers, modifications thereto, or cancellations of offers will not be accepted.

6. PROPOSAL SUBMISSION REQUIREMENTS AND INSTRUCTIONS
a. REQUIREMENT FOR SEPARATE PRICE AND TECHNICAL PROPOSALS.

(1) Each Offeror must submit both a Price Proposal and a Technical Proposal. The Price Proposal and the Technical Proposal must be submitted as separate volumes. Ensure that the outside of each separate volume is clearly marked to indicate its contents; and the identity of the offeror.
Additionally, clearly identify the “original” cost/price proposal and the “original” technical proposal on the outside cover.

(2) Both the Price Proposal and the Technical Proposal must be received by the closing date and time set for receipt of proposals.

(3) No dollar amounts from the Price Proposal are to be included in the Technical Proposal.

(4) All information intended to be evaluated as part of the Technical Proposal must be submitted as part of the Technical Proposal. Do not cross-reference similar material in the Price Proposal, or vice
versa. Also, do not include links to websites in lieu of incorporating information into your proposal.

(5) Do not include exceptions to the terms and conditions of the solicitation in either the technical or price proposal. Should the offer include any standard company terms and conditions that conflict with the terms and conditions of the solicitation, the offer may be determined "unacceptable" and thus ineligible for award. Should the offeror have any questions related to specific terms and conditions, these should be resolved prior to submission of the offer. Notwithstanding the above, the Offeror must clearly describe in the Proposal Cover Sheet submitted with the Price Proposal any exceptions to the contractual
and/or technical terms and conditions of the solicitation contained in the Offer.

b. DISCUSSIONS. The Government **does not** intend to enter into discussions with offerors prior to determining those contractors within the competitive range, in accordance with FAR 52.215-1, Instructions to Offerors—Competitive Acquisitions, Alternate I.

c. COST OR PRICING DATA. Offerors are not required to submit Cost or Pricing Data with their offers.

d. GENERAL INSTRUCTIONS.

(1) Submit only the hard-copy paper documents and the electronic files specifically authorized and/or required elsewhere in this section. Do not submit excess information, to include audio-visual materials, electronic media, etc.

(2) Use only 8 ½ by 11 inch paper for hard copy submissions, unless another paper size is specifically authorized elsewhere in this section for a particular submission. Do

not use fold-outs (e.g., 11” x 14” or 11” x 17” sheets) unless specifically authorized in this section for a particular submission. Do not use a font size smaller than 10, an unusual font style such as script, or condensed print for any submission. All page margins must be at least 1 inch wide, but may include headers and footers.

(3) The preferred method for assembling your proposals is to use three-ring binders; however, the use of pressboard or other report covers with compression or other type fasteners is acceptable. Do not use spring clamps or exceed the recommended capacity of the fastener or binder. Do not use plastic multi-hole/spiral binding systems, heat binding systems, or other systems which do not facilitate the ready insertion of additional pages.

(4) “Confidential” projects cannot be submitted to demonstrate capability unless all of the information required for evaluation as specified herein can be provided to the Government as part of the Offeror’s technical proposal. Offerors that include in their proposals information that they do not want disclosed to the public for any purpose, or used by the Government except for evaluation purposes, must be clearly marked in accordance with the instructions at FAR 52.215-1, “Instructions to Offerors—Competitive Acquisition”, paragraph (e), “Restriction on disclosure and use of data”.

(5) In the case of an Offeror that is part of a large, multi-segmented business concern, provide information directly pertaining to the specific segment of the business concern (i.e., the division, group, unit, etc.) that will perform work under the prospective contract.

(6) For submissions with page limitations, the pages will be counted as follows: One side of the paper is one page; information on both the back and front of one sheet of paper will be counted as two pages. Where authorized, fold-out pages (11" x 14" or 11" x 17") will count as one page. Pages furnished for organizational purposes only, such as a “Table of Contents” or divider tabs, are not included in the page limitation.

e. SPECIFIC INSTRUCTIONS FOR THE PRICE PROPOSAL

(1) Number of Sets of the Price Proposal. Submit the ORIGINAL and ONE additional hard copy sets of the Price Proposal.

(2) Size Restrictions and Page Limits. Use only 8 ½” x 11” pages. There are no page limits set for the price proposal. However, limit your response to information required by this solicitation. Excess information will not be considered in the Government’s evaluation.

(3) Format and Contents of the Price Proposal and List of Tabs. The Price Proposal shall be appropriately labeled as such and shall be organized as indicated in the following chart. Note: If the Offeror is not required to submit any information under a

listed Tab in accordance with the instructions below, that tab can be omitted. However, do not renumber the subsequent tabs.

TAB	CONTENTS OF THE PRICE PROPOSAL
#1	The Proposal Cover Sheet
#2	The SF1442 and Acknowledgement of Amendments
#3	Section 00010, Pricing Schedule
#4	Representations, Certifications, and Other Statements of Offerors
#5	JV Agreement, if applicable.

(4) Detailed Submission Instructions for the Price Proposal

TAB 1: The proposal cover sheet is required by FAR 52.215-1(2) (c) (i)-(v) and must be submitted by all offerors. This provision, titled "Instructions to Offerors—Competitive Acquisition," and the format for the proposal cover sheet are furnished elsewhere in this section.

TAB 2: The SF 1442, Solicitation, Offer, and Award is to be completed by all Offerors and duly executed with an original signature by an official authorized to bind the company in accordance with FAR 4.102.

Any and all amendments must be acknowledged by all Offerors in accordance with the instructions on the Standard Form 30, Amendment of Solicitation.

TAB 3: Section 00010, Pricing Schedule is to be completed in its entirety by all Offerors. See Section 00010 with attached notes, for further instructions.

TAB 4: All Offerors must have electronically completed the annual representations and certifications on the "Online Representations and Certifications Application" (ORCA) website or respond with the completed representations / certifications found in the solicitation. The offerors are responsible for ensuring that these on-line Representations and Certifications are updated as necessary to reflect changes, but at least annually to ensure that they are kept current, accurate and complete. Additionally, the offeror must also complete and return the "Representations, Certifications, and Other Statements of Offerors" included in the solicitation. If the offeror is a Joint Venture, all participants must separately complete both the ORCA Representations and Certifications.

TAB 5: If the Offeror is a Joint Venture (JV), include a copy of the JV Agreement. If a JV Agreement has not yet been finalized/approved, indicate its status. JV Agreements must clearly indicate the percentages of the JV participants, in particular the percent of the controlling party, and a clear delineation of responsibilities and authorities between the JV parties.

f. SPECIFIC INSTRUCTIONS FOR THE TECHNICAL PROPOSAL

(1) Number of Sets of the Technical Proposals. Submit the ORIGINAL and Four (4) additional sets of the written Technical Proposal, with each set separately packaged.

(2) Format and Contents of the Technical Proposal and List of Tabs. The original and all copies of the technical proposal will be appropriately labeled as such. Each set shall be organized using the tabs specified in the following chart. Note: The main tabs directly correlate to the evaluation factors identified in Section 00120.

TAB	**CONTENTS OF THE TECHNICAL PROPOSAL**
Factor #1	EXPERIENCE
Factor #2	PROJECT MANAGEMENT PLAN
Factor #3	KEY PERSONNEL
Factor #4	CAPACITY
Factor #5	PAST PERFORMANCE

(3) Page Limitations. See paragraphs 6.d.(2) and 6.d.(6) above for format and page count instructions. The following page limitations are established for each factor described above:

- Factor #1, Experience – Limited to 1 Experience Form per project. Maximum 10 projects.
- Factor #2, Project Management Plan – Limited to 6 pages total, not including organizational charts
- Factor #3, Key Personnel – Limited to 1 page for each resume provided.
- Factor # 4, Capacity – No page limitation
- Factor # 5, Past Performance – No page limitation

Tables of content, proposal cover letters, and tabs between proposal information do not count toward any page limitations in the proposal.

(4) Detailed Submission Requirements for the Technical Proposal. The following is a detailed description of the information to be submitted under each TAB.

(i) **TAB 1: FACTOR 1, EXPERIENCE:** The Offeror shall complete a minimum of five (5), but no more than ten (10), "Experience Information" forms, attached at the end of this section, in response to this factor. All blocks must be filled in and all data should be accurate, current, and complete. All projects submitted must have been underway or completed within the last 3 years. At least three (3) of the projects provided must be valued at over $20,000,000.00. The projects submitted must demonstrate that the Contractor and/or team, including sub-contractors, has experience on projects that are the same or similar to that described in the solicitation. The projects submitted must have been performed by the offeror and/or same team member(s) who will be providing similar services under the prospective contract.

(ii) **TAB 2: FACTOR 2, PROJECT MANAGEMENT PLAN:** The Offeror shall provide a narrative that addresses the Offeror's project management plan. The plan must, as a minimum, address the following elements:

* Describe the procedures used to manage the project, to include project management, quality control, and safety;
* Describe how the Offeror plans to meet major design and construction project milestones in the specifications that reflects completion of all work within the period of contract performance.
* Provide a narrative response that addresses timely delivery and receipt of equipment and materials at the job site which coincides with the major construction project milestones and provides for protection of equipment and materials to and from an isolated project site in a hostile environment.
* Provide an organizational chart depicting lines of authority and responsibility for all personnel/entities on the project, including subcontractors, from the lowest level to the corporate level. The organizational chart shall clearly indicate which entity has overall authority for the contract and identify by name and title the single Point of Contact to the Government for all project-related matters.

(iii) **TAB 3: FACTOR 3, KEY PERSONNEL**: The offeror must provide resume data for the following key personnel: Project Manager, Senior Civil Engineer, Field Safety Officer, Field Quality Control Manager, Site Project Manager, and Site Foreman.

Resume information to be provided for personnel identified above shall be limited to no more than one (1) page per person and shall include the following information as a minimum:

- Name and title
- Project assignment
- Name of firm with which associated
- Years experience with this firm and with other firms
- Education degree(s), year, specialization, if applicable
- Active professional registration, year first registered, if applicable

o Other experience and qualifications relevant to same/similar work required under this contract

All key personnel shall have a degree in the field of work governed by the position they are assigned to and a minimum of five (5) years of professional experience in their field. For example, a Civil Engineer must have a degree in Civil Engineering and 5 years of professional civil engineering experience.

(iv) **TAB 4: FACTOR 4, CAPACITY:** The contractor shall submit a list of ALL current ongoing contracts or projects. The list shall include the contract number, contract amount, original contract completion date, current official contract completion date, and the current progress. The contractor shall identify the key personnel assigned to each of those projects. See FACTOR 3, KEY PERSONNEL for the titles of the key personnel that should be identified. The contractor shall provide a narrative that explains how award of this contract will affect current contracts or projects and how the current contracts or projects will affect this contract if it is awarded to the contractor. The contactor shall provide a narrative that explains their capability and plan to implement an additional project and the resources available to them without adversely affecting current contract or projects.

(v) **TAB 5: FACTOR 5, PAST PERFORMANCE:** For the projects listed under Factor 1 – Experience, provide letters of recommendations, commendations and/or awards. Offerors should provide accurate, current, and complete contact information for references provided in the project descriptions.

The Government may contact references provided as part of Factor 1 – Experience for information regarding the offeror's past performance on the project and for the purposes of assessing and verifying the scope of the work performed.

7. Proposal Cover Sheet -- see next page

PROPOSAL COVER SHEET

1. Solicitation Number:

2. The name, address, and telephone and facsimile numbers of the Offeror (and electronic address if available):

3. A statement specifying the extent of agreement with all terms, conditions, and provisions included in the solicitation and agreement to furnish any or all items upon which prices are offered at the price set opposite each item. Statement to include any exceptions in technical or cost/price proposal or exceptions inherent in Offeror's standard terms and conditions.

4. Names, titles, and telephone and facsimile numbers (and electronic addresses if available) of persons authorized to negotiate on the Offeror's behalf with the Government in connection with this solicitation:

5. Name, title, and signature of person authorized to sign the proposal. Proposals signed by an agent shall be accompanied by evidence of that agent's authority, unless that evidence has been previously furnished to the issuing office.

8. SOURCE SELECTION USING THE BEST-VALUE PROCESS

The Government will select the offer that represents the best value to the Government by using the tradeoff process described in FAR Part 15. This process permits tradeoffs between cost/price and technical ("non-cost") factors and allows the Government to accept other than the lowest priced offer. The award decision will be based on a comparative assessment of proposals against all source selection criteria in the solicitation. See also Section 00120.

PROVISIONS INCORPORATED BY FULL TEXT

9. FAR 52.215-1, Instructions to Offerors – Competitive Acquisition

10. DBA Provision Local

EXPERIENCE INFORMATION **(To be completed by Contractor)**	
1. Contractor: **Name:** **Address:**	**2. Contract /Task Order(TO) /Purchase Order (PO) Number:**
	3. Contract/TO/PO Dollar Value:
	4. Contract/TO /PO Status: **Active** **Complete** **Completion Date (w/ extensions):**
5. Project Title: **Location:**	
6. Project Description:	
7. Project Owner or Project Manager for the Client – provide: **Name:** **Address:** **Telephone Number and E-mail:**	

SECTION 00120

OTHER CONSTRUCTION – BEST VALUE

PROPOSAL EVALUATION AND CONTRACT AWARD

1. ELIGIBILITY FOR CONTRACT AWARD

In accordance with the FAR, no contract shall be entered into unless the contracting officer ensures that all requirements of law, executive orders, regulations, and all other applicable procedures, including clearances and approvals, have been met. This includes the FAR requirement that no award shall be made unless the contracting officer makes an affirmative determination of responsibility. To be determined responsible, a prospective contractor must meet the general standards in FAR Part 9 and any special standards set forth in the solicitation.

2. SOURCE SELECTION USING THE BEST-VALUE PROCESS

The Government will select the offer that represents the best value to the Government by using the tradeoff process described in FAR Part 15. This process permits tradeoffs between cost/price and technical ("non-cost") factors and allows the Government to accept other than the lowest priced offer. The award decision will be based on a comparative assessment of proposals against all source selection criteria in the solicitation.

3. RELATIVE IMPORTANCE OF PRICE TO THE TECHNICAL EVALUATION FACTORS

All evaluation factors other than cost or price, when combined, are more important than price. The Government is concerned with achieving the most advantageous balance between technical merit ("quality") and price to the Government (i.e., the price). The degree of importance of price could become
greater depending upon the equality of the technical proposals. If competing technical proposals are determined to be essentially equal, price could become the controlling factor.

4. EVALUATION OF THE PRICE PROPOSALS

a. Price will be evaluated and considered but will not be scored or combined with other aspects of the proposal evaluation. The proposed prices will be analyzed for reasonableness. They may also be analyzed to determine whether they are realistic for the work to be performed; reflect a clear understanding of the requirements; and are consistent with the Offeror's Technical Proposal.
Additionally, all offers will be analyzed for unbalanced pricing.
b. The price will be used along with the technical evaluation to make selection for award. Since evaluation of the price proposal will represent a portion of the total

evaluation, it is possible that an offeror might not be selected for award because of unreasonable, unrealistic, or incomplete price proposal information. The Government will evaluate the format and clarity of the price proposal.

c. Other Award Factors: The Contracting Officer shall consider several factors in the selection process which are important, but not quantified, such as:

(1) Agreement by the offeror to all general and special contract provisions and clauses.

(2) Determination of responsibility of the contractor by the Contracting Officer in accordance with the provisions of the Federal Acquisition Regulation, Part 9.1. In order to be determined responsible, a prospective contractor must:

(a) Have adequate financial resources to perform the contract or the ability to obtain them.

(b) Be able to comply with the required or proposed delivery or performance schedule taking into consideration all existing commercial and Governmental business commitments.;

(c) Have a satisfactory performance record.

(d) Have a satisfactory record of integrity and business ethics.

(e) Have the necessary organization, experience, accounting and operational controls, and technical skills, or the ability to obtain them.

(f) Have the necessary production, construction, and technical equipment and facilities, or the ability to obtain them.

(g) Be otherwise qualified and eligible to receive an award under applicable laws and regulations.

5. **EVALUATION OF THE TECHNICAL PROPOSAL.** The Technical Proposal will be evaluated based on the following evaluation criteria:

a. **FACTOR 1: EXPERIENCE:** The Government will evaluate the relevant work experience of the offeror and their proposed team, including subcontractors, on projects that are the same or similar to that described in this solicitation. Offerors with experience on same or similar projects (type of services, similar dollar value, complexity, USACE design / construction requirements, and applicable quality standards) will receive a higher rating than those with dissimilar projects. In order to receive a Satisfactory rating, the Contractor must meet the following requirements:

* The Contractor shall submit a minimum of five (5), but no more than ten (10), “Experience Information” forms, attached at the end of this section, in response to this factor.
* All blocks must be filled in and all data should be accurate, current, and complete.
* All projects submitted must have been underway or completed within the last 3 years.
* At least three (3) of the projects provided must be valued at over $20,000,000.00.
* The projects submitted must demonstrate that the Contractor and/or team, including sub-contractors, has experience on projects that are the same or similar to that described in the solicitation. The projects submitted must have been performed by the

offeror and/or same team member(s) who will be providing similar services under the prospective contract.

b. **FACTOR 2: PROJECT MANAGEMENT PLAN:** The Offeror's Project Management Plan will be evaluated for:

* The Offeror's ability manage the project, control quality and safety;
* How the offeror plans to meet the major design and construction project milestones.
* The Offeror's understanding of the work efforts and its ability to provide quality, responsive, and timely performance over the planned life of the project;
* If the offeror has a sound plan addressing timely delivery and receipt of equipment and materials at the job site which coincides with the major construction project milestones and provides for protection of equipment and materials to and from an isolated project site in a hostile environment.
* The organizational chart will be evaluated for a clear depiction of the lines of authority and responsibility for all personnel/entities on the project, including subcontractors, from the lowest level to the corporate level. The organizational chart shall clearly indicate which entity has overall authority for the contract and identify by name and title the single Point of Contact to the Government for all project-related matters.

c. **FACTOR 3: KEY PERSONNEL:** Key personnel resumes will be evaluated to determine the depth and breadth of personnel experience on the same or similar projects and as it relates to the responsibilities that person will have on this contract. All key personnel shall have a degree in the field of work governed by the position they are assigned to and a minimum of five (5) years of professional experience in their field. For example, a Civil Engineer must have a degree in Civil Engineering and 5 years of professional civil engineering experience. In order to receive a Satisfactory rating for this factor, the Offeror must meet the following requirements:

* The offeror must provide resume data for the following key personnel:
o Name and title
o Project assignment
o Name of firm with which associated
o Years experience with this firm and with other firms
o Education degree(s), year, specialization, if applicable
o Active professional registration, year first registered, if applicable
o Other experience and qualifications relevant to same/similar work required under this contract
* Resume information to be provided for personnel identified above shall be limited to no more than one (1) page per person and shall include the following information as a minimum:
o Project Manager,
o Senior Civil Engineer,
o Field Safety Officer,
o Field Quality Control Manager,

o Site Project Manager, and
o Site Foreman.

d. **FACTOR 4: CAPACITY** Offerors who convincingly demonstrate that they have the reserve capacity for additional contracts or projects without adversely affecting existing projects or contracts will receive a higher rating that those which appear to be at or near capacity or fail to provide convincing evidence of surplus capacity. In order to receive a Satisfactory rating for this factor, the Offeror must meet the following requirements:
o The Offeror submitted a list of ALL current ongoing contracts or projects.
o The list included the contract number, contract amount, original contract completion date, current official contract completion date, and the current progress.
o The Offeror identified the key personnel assigned to each of those projects delineated in FACTOR 4 – PERSONNEL for each of the current contracts or projects.
o The Offeror provided a narrative that satisfactorily explains how award of this contract will not adversely affect any current contracts or projects.
o The Offeror provided a narrative that satisfactorily explains how the current contracts or projects will not adversely affect this contract if it is awarded to the contractor.
o The Offeror provided a narrative that satisfactorily explains how they are going to assume the responsibility for this additional contract or project as well as an explanation of the resources they will use on this contract without adversely affecting current contract or projects.
o The contractor's responses will be evaluated to determine if the contractor has additional capacity to handle the project.

d. **FACTOR 5: PAST PERFORMANCE:** In order to be considered responsive to this factor, the Offeror must submit "Experience Information" forms for all the projects listed under Factor 1 – Experience, attached at the end of Section 00110, in response to Factor 1-Experience. All blocks must be filled in and all data should be accurate, current, and complete.
o The Government will evaluate past performance information to assess the level of performance risk associated with the Offeror's likelihood of success in performing the requirements stated in the solicitation.
o The currency and relevance of the information (as determined by the Government), the source of the information, context of the data, and general trends in the contractor's performance may be considered.
o Information submitted by the Offeror pertaining to recent, relevant contracts will be evaluated as well as data obtained from other sources, including automated databases and questionnaires.
o References other than those identified by the Offeror may be contacted by the Government. The Government may take into consideration the Offeror's performance of contracts with the agency; other Federal, State, and local government activities; and commercial concerns. The result will be a performance risk rating based on each Offeror's record of past performance.

For the purpose of the past performance evaluation, offerors shall be defined as business arrangements and relationships, such as Joint Venture participants, teaming partners, and major subcontractors. The past performance record of each firm in the business arrangement may be evaluated by the Government.

In the case of an Offeror without a record of recent, relevant past performance (and for which there is also no recent, relevant past performance information for its predecessor companies or key subcontractors), or for whom information on past performance is not available or cannot be verified, the Offeror will not be evaluated favorably or unfavorably on past performance. This does not preclude the Government from making award to a higher-priced Offeror with a favorable past performance record over a lower-priced Offeror with a neutral past performance rating.

6. RELATIVE WEIGHTING OF THE TECHNICAL EVALUATION FACTORS. All technical factors are equal in weight and importance

7. GENERAL TECHNICAL CRITERIA

a. Material omission(s) may cause the technical proposal to be rejected as unacceptable.

b. Technical proposals which do not provide the specified information in the specified location in accordance with the submission instructions may be downgraded. The Government is under no obligation to search for information that is not in the specified location.

c. Proposals which are generic, vague, or lacking in detail may be downgraded. The offeror's failure to include information that the Government has indicated should be included may result in the proposal being downgraded and/or being found deficient if inadequate detail is provided.

d. The Government cannot make award based on a deficient offer. Therefore, a rating of "Unsatisfactory" under any subfactor will make the offer ineligible for award, unless the Government elects to enter into discussions with that Offeror and all deficiencies are remedied in a revised proposal.

CLAUSES INCORPORATED BY FULL TEXT

8. 52.217-5 EVALUATION OF OPTIONS (JUL 1990)
Except when it is determined in accordance with FAR 17.206(b) not to be in the Government's best interests, the Government will evaluate offers for award purposes by adding the total price for all options to the total price for the basic requirement. Evaluation of options will not obligate the Government to exercise the option(s).

(End of provision)

SECTION 150

SECTION 00150

THE DESIGN/BUILD PROCESS FOR SOUTH PARK IMPROVEMENTS

PART 1 - GENERAL

1. DESIGN/BUILD (DB) PROCESS

The facility shall be designed and built by a single DB contractor. The DB contractor may be a single firm or a team of firms that includes registered Architects and Engineers either employed by or subcontracted to the DB contractor. Licensing jurisdiction of Architects and Engineers of record shall be shall be verifiable. The DB contractor shall be the Architect/Engineer-of-Record, whether the DB contractor utilizes services of licensed architects and engineers employed by its firm or subcontracts with independent architectural and/or engineering firm(s). The DB contractor shall be solely liable for design errors and/or omissions and should be insured as the A-E firm against design errors and omissions.

Section 00555, DESIGN CONCEPT DOCUMENTS identifies project documents furnished herewith to be used as the basis for the project design and construction documents. The successful Offeror shall be required to complete the design and construction documentation, and construct the project in compliance with these completed requirements.

2. OUTLINE DESCRIPTION OF THE DB PHASE

No work can begin on any phase of the process until an authorization Clearance for construction for that phase is issued.

2.1 PROPOSAL PHASE

The Proposal Phase includes the period from the time from the issuance of the Request for Proposals (RFP) through the selection process and the final award of the DB contract.

The proposals to be submitted include a Management/Technical Proposal and a Cost/Price Proposal. The contents and organization of the proposal is described in SECTION 00110 - PROPOSAL PREPARATION. The Government will evaluate and award the DB contract to a single Offeror based upon the criteria which are outlined in SECTION 00120 - PROPOSAL EVALUATION AND CONTRACT AWARD.

2.2 DESIGN PHASE

The successful DB contractor shall develop and submit for formal review three submittals and the final design. The DB contractor is encouraged to develop and submit multiple cost saving proposals for innovative design alternatives.

2.2.1 The Design Phase will consist of three parts as follows:

a. Part 1 will be the basic services required to develop the first submittal which represents: 100% complete drawings and specifications for site preparation work, utility construction, paving, foundation, and structural diaphragm of all work and approximately 65% complete drawings and specifications of all other required construction documents (35% drawings for the Entry Control Point (ECP) project only). Part I also includes incorporating the revisions identified in the First submittal review.

After approval of the Part 1 drawings and specification submittal, the Government may issue a Clearance for Construction letter to commence with the Build Phase for all site and off-site utilities,

clearing, grubbing, rough grading the site, demolition work, parking lot base course, foundation, and structural framing.

A Pre-design meeting will be conducted to distribute as-built drawings to the DB contractor, finalize and clarify technical information, and clarify other necessary information.

b. Part 2 shall include all design services required to complete the second design submittal: 100% complete drawings and specifications for site preparation work, utility construction, paving, foundation, and structural diaphragm of all work and approximately 65% complete drawings and specifications of all other required construction documents. Part 2 design shall not begin until an approval of the Part 1 submittal is issued.

c. Part 3 shall include all design services required to complete the third design submittal (100%). Part 3 design shall not begin until an approval of the Part 2 submittal is issued.

3. BUILD PHASE

The Build Phase will be initiated by an authorization letter.

The authorization letter will be provided separately by the Contracting Officer for each phase of the work. The Government may give the DB Contractor authorization for the Build Phase for portions of the work following review and approval of the First Design Submittal.

Weekly coordination meetings will be held at which, as a minimum, the DB Contractor's Project Manager, a representative of the Designer, the site Superintendent, and the Contractor's Quality Control Manager shall be present.

4. PROJECT SCHEDULE:

The following is an internal design schedule and is subject to modification by the Offeror to suit their particular method of operation. Overall time constraints are required and cannot be changed except by contract modification. Prospective offerors shall be required to submit a complete schedule for design and construction that meets or exceeds the overall time goals of the Government for this project.

Notice to Proceed	following Award of Contract (upon written notification)
Design Phase - Basic Services Pre-design Meeting	within 7 days from Award of Contract
Design Submittal Due	within 14 days following Award of Contract
Submittal Review Conference ***(location TBD)***	within 7 days following submittal review
Incorporate Changes to Submittal (Re-Submit for Review and Approval 100% design submittal)	within 7 days following review conference
Build Phase Authorization for Remainder of Work	Upon approval of design submittal

Total Design and Construction Period **360** days (performance period

includes design and construction phases)

4. LIQUIDATED DAMAGES:

Liquidated damages in the amount of **$3,850.00** every calendar day of delay shall be assessed and charged to the Contractor.

All days are in calendar days.

PART 2 - PRODUCTS (NOT APPLICABLE)

PART 3 - EXECUTION (NOT APPLICABLE)

--END OF SECTION--

SECTION 00555

SECTION 00555

DESIGN CONCEPT DOCUMENTS FOR SOUTH PARK IMPROVEMENTS

PART 1 GENERAL

1.1 GENREAL

This section identifies documents issued with this RFP which establish the concept or basis for the project design. These requirements are minimum standards and may be exceeded by the Offeror. Deviations from these concepts and standards may be approved if considered by the Government to be in its best interests.

The extent of development of these requirements in no way relieves the successful Offeror from the responsibility of completing the design, construction documentation, and construction of the facility in conformance with applicable criteria and codes.

1.2 ENGINEERING AND DESIGN CRITERIA

General design requirements are set forth in this RFP herein. The Specifications Divisions 02 thru 16 is the primary specifications criteria for the design and construction of the project. No design criteria will be furnished by the Afghanistan Engineer District except that which may be required for design and is not available from commercial sources or from the Construction Criteria Base (CCB) or 'Techinfo' website located at http://www.wbdg.org/ccb/ . The references within CCB must be obtained by the A/E if the criteria are required or desired. All design, unless otherwise specified, shall be based on nationally recognized industry standard, criteria, and practice.

1.3 APPENDIX DOCUMENTS

See Appendices for further technical requirements, criteria, and parameters that are a part of this contract.

1.4 SPECIFICATIONS

Specifications included herein shall be utilized as design criteria and minimum standards for the corresponding construction work. The successful Offeror shall develop complete construction specifications using the criteria included in these specifications.

The Government will provide Division 1 specifications sections as required, to the successful Offeror; and these sections shall be included in the final construction specifications without change. The Design Build Contractor shall furnish these specifications on electronic media for the production of construction specifications when requested. These specifications shall be submitted together with other required contractor prepared project construction documents during the Second Design Submittal of the Design Phase, Part II.

1.5 ORDER OF PRECEDENCE

In case of conflict, duplication, or overlap of design criteria specified in the documents referenced in this section, the following order of precedence shall be followed:

1. Contract Award Document and referenced publications therein.
2. Written requirements supersede drawings.

1.6 MANDATORY CRITERIA

Portions of the design criteria documents provide mandatory criteria. Mandatory criteria consists of drawings, schematics, specifications, and other requirements which shall not be altered or modified for proposal submittal or subsequent final design except for minor adjustments for coordination or except for cost reduction proposals as specified in Section 00150 - THE DESIGN BUILD PROCESS. Non-mandatory criteria shall be considered minimum requirements and may be enhanced, improved, or substituted to better suit design requirements or to improve evaluation consideration. Mandatory requirements are as listed below. All other design criteria shall be considered non-mandatory.

Work Plan
Boundary survey plan
Topographic survey plan
Any mandatory criteria referenced within Project Program.
Any other criteria listed herein which is listed, shown or implied as mandatory.

1.7 ADDITIONAL DOCUMENTS/CRITERIA FURNISHED BY THE GOVERNMENT

The following documents will be furnished to the Design/Build Contractor when requested by the Offeror or Contractor:

Design Criteria published by the Government such as Technical Manuals (TM), Engineer Manuals (EM), Engineer Technical Letters (ETL) and other documents related to the design referenced herein which are not available on the Internet, including the CCB website.

Commercial design criteria and specifications will not be furnished by the Government.

Conversion of electronic media to other formats shall be the responsibility of the Design Build Contractor.

PART 2 PRODUCTS (Not Applicable)

PART 3 EXECUTION (Not Applicable)

-- End of Section --

Section 00600 - Representations & Certifications

CLAUSES INCORPORATED BY REFERENCE

52.203-2	Certificate Of Independent Price Determination	APR 1985
52.203-11	Certification And Disclosure Regarding Payments To Influence Certain Federal Transactions	SEP 2007
52.204-8	Annual Representations and Certifications	JAN 2006
52.209-5	Certification Regarding Responsibility Matters	MAY 2008
52.222-22	Previous Contracts And Compliance Reports	FEB 1999
52.222-38	Compliance With Veterans' Employment Reporting Requirements	DEC 2001
252.209-7001	Disclosure of Ownership or Control by the Government of a Terrorist Country	OCT 2006
252.225-7031	Secondary Arab Boycott Of Israel	JUN 2005
252.225-7042	Authorization to Perform	APR 2003
252.247-7022	Representation Of Extent Of Transportation Of Supplies By Sea	AUG 1992

SECTION 00600

AI 26.6 Projected Afghan and Third Country National (TCN) Employment (5 Nov 07)

Collection and Reporting Employment Statistics

Projected Afghan Employment

The purpose of this clause is to collect data on the projected number of Afghans employed for the term of the contract. Offerors are required to identify in the space provided below the total projected number that will be directly employed in the performance of this contract.

Employment is the total number of Afghan persons expected to be on the payroll (contractors, subcontractors, & sub-subcontractors) emp1oyed full or part time who received pay for my part of the term of the contract. Temporary and intermittent employees are included, as are any workers who are on paid sick leave, on paid holiday, R&R leave or who work during only part of the pay period." Enter into spaces provided in item #l. Next enter in the spaces provided in item #2 what is the average number employed throughout the term of the contract. Item #3 An "Afghan-Based Company" is a company (including a subsidiary company) whose principal place of business is located within Afghanistan.

1. Total Afghan (Afghan Residents) Employed:

Afghan: Men _____

Afghan: Females _____

Total: _____

2. Average Afghans (Afghan Residents) Employed:

Afghan: Men _____

Afghan: Females _____

Total: _____

1. Is your company an "Afghan Based" company? Yes ___ No___. If no, what country is your company registered/incorporated: _____

2. Afghan Company Certification. The offeror ____is or ____is not an Iraqi owned firm. If the firm is Afghan owned, the Ministry of Trade registration/license number is: _____.

(End)

SECTION 00600

DEFENSE BASE ACT INSURANCE RATES – LIMITATION – FIXED-PRICE (OCT 2008)

(a) The U. S. Army Corps of Engineers (USACE) has entered into a contract with **CNA Insurance** to provide all Defense Base Act (DBA) insurance to USACE and JCC-I/A contractors and subcontractors at a contracted fixed rate. The fixed rates for this insurance are as follows:

Service	$4.00	per $100 of employee remuneration
Construction	$7.50	per $100 of employee remuneration
Aviation	$20.00	per $100 of employee remuneration
Security	$12.50	per $100 of employee remuneration

(b) Bidders/Offerors should compute the total compensation or total payroll, (salary, plus overseas recruitment incentive and post differential, but excludes per diem, housing allowance, travel expenses, temporary quarters allowance, education allowance and other miscellaneous post allowances) to be paid to employees who will be covered by DBA insurance. Compute the cost of DBA Insurance by utilizing the spaces provided below for the base period and whatever extension there may be thereafter, if applicable.

(1) Compensation of Covered Employees: _____
(Total Payroll Not Total Contract Value) Ex:: If total Payroll is $100,000.00

(2) Applicable DBA Rate: _____
(Use appropriate Rate) Ex: If a Service, the rate is $4.00/$100 or 4%

(3) Total DBA Cost: _____
(Amount of DBA Premium) Ex:: $100 K multiplied by 4% is $4,000.00

(c) Bidders/Offerors shall include a statement as to whether or not local nationals or third country nationals will be employed on the resultant contract.

(d) CNA Insurance is utilizing Rutherfoord International as their managing Broker. The primary POC is the USACE DBA Program Administrator is Ramoan Jones, (703) 813-6571 ramoan.jones@rutherfoord.com. The alternate POC is Sara Payne, Senior Vice President, (703) 813-6503 sara.payne@rutherfoord.com.

Section 00700 - Contract Clauses

CLAUSES INCORPORATED BY REFERENCE

52.202-1	Definitions	JUL 2004
52.203-3	Gratuities	APR 1984
52.203-5	Covenant Against Contingent Fees	APR 1984
52.203-6	Restrictions On Subcontractor Sales To The Government	SEP 2006
52.203-7	Anti-Kickback Procedures	JUL 1995
52.203-8	Cancellation, Rescission, and Recovery of Funds for Illegal or Improper Activity	JAN 1997
52.203-10	Price Or Fee Adjustment For Illegal Or Improper Activity	JAN 1997
52.203-12	Limitation On Payments To Influence Certain Federal Transactions	SEP 2007
52.204-4	Printed or Copied Double-Sided on Recycled Paper	AUG 2000
52.209-6	Protecting the Government's Interest When Subcontracting With Contractors Debarred, Suspended, or Proposed for Debarment	SEP 2006
52.215-2	Audit and Records--Negotiation	JUN 1999
52.215-13	Subcontractor Cost or Pricing Data--Modifications	OCT 1997
52.215-15	Pension Adjustments and Asset Reversions	OCT 2004
52.215-18	Reversion or Adjustment of Plans for Postretirement Benefits (PRB) Other than Pensions	JUL 2005
52.222-21	Prohibition Of Segregated Facilities	FEB 1999
52.222-26	Equal Opportunity	MAR 2007
52.222-27	Affirmative Action Compliance Requirements for Construction	FEB 1999
52.222-35	Equal Opportunity For Special Disabled Veterans, Veterans of the Vietnam Era, and Other Eligible Veterans	SEP 2006
52.222-36	Affirmative Action For Workers With Disabilities	JUN 1998
52.222-37	Employment Reports On Special Disabled Veterans, Veterans Of The Vietnam Era, and Other Eligible Veterans	SEP 2006
52.222-50	Combating Trafficking in Persons	AUG 2007
52.225-13	Restrictions on Certain Foreign Purchases	JUN 2008
52.225-14	Inconsistency Between English Version And Translation Of Contract	FEB 2000
52.227-4	Patent Indemnity-Construction Contracts	DEC 2007
52.229-6	Taxes--Foreign Fixed-Price Contracts	JUN 2003
52.232-5	Payments under Fixed-Price Construction Contracts	SEP 2002
52.232-17	Interest	OCT 2008
52.232-27	Prompt Payment for Construction Contracts	OCT 2008
52.232-33	Payment by Electronic Funds Transfer--Central Contractor Registration	OCT 2003
52.232-34	Payment By Electronic Funds Transfer--Other Than Central Contractor Registration	MAY 1999
52.232-38	Submission of Electronic Funds Transfer Information with Offer	MAY 1999
52.233-1	Disputes	JUL 2002
52.233-3	Protest After Award	AUG 1996
52.236-2	Differing Site Conditions	APR 1984
52.236-3	Site Investigation and Conditions Affecting the Work	APR 1984
52.236-5	Material and Workmanship	APR 1984
52.236-6	Superintendence by the Contractor	APR 1984
52.236-7	Permits and Responsibilities	NOV 1991
52.236-8	Other Contracts	APR 1984

52.236-9	Protection of Existing Vegetation, Structures, Equipment, Utilities, and Improvements	APR 1984
52.236-10	Operations and Storage Areas	APR 1984
52.236-11	Use and Possession Prior to Completion	APR 1984
52.236-12	Cleaning Up	APR 1984
52.236-13 Alt I	Accident Prevention (Nov 1991) - Alternate I	NOV 1991
52.236-15	Schedules for Construction Contracts	APR 1984
52.236-17	Layout of Work	APR 1984
52.236-21 Alt I	Specifications and Drawings for Construction (Feb 1997) - Alternate I	APR 1984
52.236-23	Responsibility of the Architect-Engineer Contractor	APR 1984
52.236-24	Work Oversight in Architect-Engineer Contracts	APR 1984
52.236-26	Preconstruction Conference	FEB 1995
52.242-13	Bankruptcy	JUL 1995
52.242-14	Suspension of Work	APR 1984
52.243-4	Changes	JUN 2007
52.243-6	Change Order Accounting	APR 1984
52.244-4	Subcontractors and Outside Associates and Consultants (Architect-Engineer Services)	AUG 1998
52.244-5	Competition In Subcontracting	DEC 1996
52.246-21	Warranty of Construction	MAR 1994
52.247-34	F.O.B. Destination	NOV 1991
52.247-63	Preference For U.S. Flag Air Carriers	JUN 2003
52.248-3	Value Engineering-Construction	SEP 2006
52.249-2 Alt I	Termination for Convenience of the Government (Fixed-Price) (May 2004) - Alternate I	SEP 1996
52.249-10	Default (Fixed-Price Construction)	APR 1984
52.253-1	Computer Generated Forms	JAN 1991
252.201-7000	Contracting Officer's Representative	DEC 1991
252.203-7001	Prohibition On Persons Convicted of Fraud or Other Defense-Contract-Related Felonies	DEC 2004
252.204-7000	Disclosure Of Information	DEC 1991
252.204-7003	Control Of Government Personnel Work Product	APR 1992
252.209-7004	Subcontracting With Firms That Are Owned or Controlled By The Government of a Terrorist Country	DEC 2006
252.215-7000	Pricing Adjustments	DEC 1991
252.215-7002	Cost Estimating System Requirements	DEC 2006
252.222-7002	Compliance With Local Labor Laws (Overseas)	JUN 1997
252.223-7002	Safety Precautions For Ammunition And Explosives	MAY 1994
252.223-7003	Changes In Place Of Performance--Ammunition And Explosives	DEC 1991
252.223-7004	Drug Free Work Force	SEP 1988
252.225-7005	Identification Of Expenditures In The United States	JUN 2005
252.225-7041	Correspondence in English	JUN 1997
252.227-7013	Rights in Technical Data--Noncommercial Items	NOV 1995
252.227-7022	Government Rights (Unlimited)	MAR 1979
252.227-7023	Drawings and Other Data to become Property of Government	MAR 1979
252.227-7030	Technical Data--Withholding Of Payment	MAR 2000
252.227-7033	Rights in Shop Drawings	APR 1966
252.231-7000	Supplemental Cost Principles	DEC 1991
252.232-7003	Electronic Submission of Payment Requests and Receiving Reports	MAR 2008
252.232-7008	Assignment of Claims (Overseas)	JUN 1997
252.232-7010	Levies on Contract Payments	DEC 2006
252.233-7001	Choice of Law (Overseas)	JUN 1997
252.236-7000	Modification Proposals-Price Breakdown	DEC 1991

252.236-7008	Contract Prices-Bidding Schedules	DEC 1991
252.243-7001	Pricing Of Contract Modifications	DEC 1991
252.243-7002	Requests for Equitable Adjustment	MAR 1998
252.247-7023	Transportation of Supplies by Sea	MAY 2002
252.247-7024	Notification Of Transportation Of Supplies By Sea	MAR 2000

CLAUSES INCORPORATED BY FULL TEXT

52.215-19 NOTIFICATION OF OWNERSHIP CHANGES (OCT 1997)

(a) The Contractor shall make the following notifications in writing:

(1) When the Contractor becomes aware that a change in its ownership has occurred, or is certain to occur, that could result in changes in the valuation of its capitalized assets in the accounting records, the Contractor shall notify the Administrative Contracting Officer (ACO) within 30 days.

(2) The Contractor shall also notify the ACO within 30 days whenever changes to asset valuations or any other cost changes have occurred or are certain to occur as a result of a change in ownership.

(b) The Contractor shall--

(1) Maintain current, accurate, and complete inventory records of assets and their costs;

(2) Provide the ACO or designated representative ready access to the records upon request;

(3) Ensure that all individual and grouped assets, their capitalized values, accumulated depreciation or amortization, and remaining useful lives are identified accurately before and after each of the Contractor's ownership changes; and

(4) Retain and continue to maintain depreciation and amortization schedules based on the asset records maintained before each Contractor ownership change.

The Contractor shall include the substance of this clause in all subcontracts under this contract that meet the applicability requirement of FAR 15.408(k).

(End of clause)

52.217-7 OPTION FOR INCREASED QUANTITY--SEPARATELY PRICED LINE ITEM (MAR 1989)

The Government may require the delivery of the numbered line item, identified in the Schedule as an option item, in the quantity and at the price stated in the Schedule. The Contracting Officer may exercise the option by written notice to the Contractor within 120 from notice to proceed. Delivery of added items shall continue at the same rate that like items are called for under the contract, unless the parties otherwise agree.

(End of clause)

52.222-29 NOTIFICATION OF VISA DENIAL (JUN 2003)

It is a violation of Executive Order 11246 for a Contractor to refuse to employ any applicant or not to assign any person hired in the United States, Puerto Rico, the Northern Mariana Islands, American Samoa, Guam, the U.S. Virgin Islands, or Wake Island, on the basis that the individual's race, color, religion, sex, or national origin is not compatible with the policies of the country where or for whom the work will be performed (41 CFR 60-1.10). The Contractor shall notify the U.S. Department of State, Assistant Secretary, Bureau of Political-Military Affairs (PM), 2201 C Street NW., Room 6212, Washington, DC 20520, and the U.S. Department of Labor, Deputy Assistant Secretary for Federal Contract Compliance, when it has knowledge of any employee or potential employee being denied an entry visa to a country where this contract will be performed, and it believes the denial is attributable to the race, color, religion, sex, or national origin of the employee or potential employee.

(End of clause)

52.232-18 AVAILABILITY OF FUNDS (APR 1984)

Funds are not presently available for this contract. The Government's obligation under this contract is contingent upon the availability of appropriated funds from which payment for contract purposes can be made. No legal liability on the part of the Government for any payment may arise until funds are made available to the Contracting Officer for this contract and until the Contractor receives notice of such availability, to be confirmed in writing by the Contracting Officer.

(End of clause)

52.233-4 APPLICABLE LAW FOR BREACH OF CONTRACT CLAIM (OCT 2004)

United States law will apply to resolve any claim of breach of this contract.

(End of clause)

52.236-1 PERFORMANCE OF WORK BY THE CONTRACTOR (APR 1984)

The Contractor shall perform on the site, and with its own organization, work equivalent to at least twelve percent (12%) of the total amount of work to be performed under the contract. This percentage may be reduced by a supplemental agreement to this contract if, during performing the work, the Contractor requests a reduction and the Contracting Officer determines that the reduction would be to the advantage of the Government.

(End of clause)

52.249-5000 BASIS FOR SETTLEMENT OF PROPOSALS

Actual costs will be used to determine equipment costs for a settlement proposal submitted on the total cost basis under FAR 49.206-2(b). In evaluating a terminations settlement proposal using the total cost basis, the following principles will be applied to determine allowable equipment costs:

(1) Actual costs for each piece of equipment, or groups of similar serial or series equipment, need not be available in the contractor's accounting records to determine total actual equipment costs.

(2) If equipment costs have been allocated to a contract using predetermined rates , those charges will be adjusted to actual costs.

(3) Recorded job costs adjusted for unallowable expenses will be used to determine equipment operating expenses.

(4) Ownership costs (depreciation) will be determined using the contractor's depreciation schedule (subject to the provisions of FAR 31.205-11).

(5) License, taxes, storage and insurance costs are normally recovered as an indirect expense and unless the contractor charges these costs directly to contracts, they will be recovered through the indirect expense rate.

(End of Clause)

252.204-7004 CENTRAL CONTRACTOR REGISTRATION (52.204-7) ALTERNATE A (SEP 2007)

(a) Definitions. As used in this clause--

“Central Contractor Registration (CCR) database” means the primary Government repository for contractor information required for the conduct of business with the Government.

“Commercial and Government Entity (CAGE) code” means--

(1) A code assigned by the Defense Logistics Information Service (DLIS) to identify a commercial or Government entity; or

(2) A code assigned by a member of the North Atlantic Treaty Organization that DLIS records and maintains in the CAGE master file. This type of code is known as an “NCAGE code.”

“Data Universal Numbering System (DUNS) number” means the 9-digit number assigned by Dun and Bradstreet, Inc. (D&B) to identify unique business entities.

“Data Universal Numbering System +4 (DUNS+4) number” means the DUNS number assigned by D&B plus a 4-character suffix that may be assigned by a business concern. (D&B has no affiliation with this 4-character suffix.) This 4-character suffix may be assigned at the discretion of the business concern to establish additional CCR records for identifying alternative Electronic Funds Transfer (EFT) accounts (see Subpart 32.11 of the Federal Acquisition Regulation) for the same parent concern.

“Registered in the CCR database” means that--

(1) The Contractor has entered all mandatory information, including the DUNS number or the DUNS+4 number, into the CCR database;

(2) The Contractor's CAGE code is in the CCR database; and

(3) The Government has validated all mandatory data fields, to include validation of the Taxpayer Identification Number (TIN) with the Internal Revenue Service, and has marked the records ``Active." The Contractor will be required to provide consent for TIN validation to the Government as part of the CCR registration process.

(b)(1) By submission of an offer, the offeror acknowledges the requirement that a prospective awardee shall be registered in the CCR database prior to award, during performance, and through final payment of any contract, basic agreement, basic ordering agreement, or blanket purchasing agreement resulting from this solicitation.

(2) The offeror shall enter, in the block with its name and address on the cover page of its offer, the annotation "DUNS" or "DUNS +4" followed by the DUNS or DUNS +4 number that identifies the offeror's name and address

exactly as stated in the offer. The DUNS number will be used by the Contracting Officer to verify that the offeror is registered in the CCR database.

(c) If the offeror does not have a DUNS number, it should contact Dun and Bradstreet directly to obtain one.

(1) An offeror may obtain a DUNS number-

(i) If located within the United States, by calling Dun and Bradstreet at 1-866-705-5711 or via the Internet at http://www.dnb.com; or

(ii) If located outside the United States, by contacting the local Dun and Bradstreet office.

(2) The offeror should be prepared to provide the following information:

(i) Company legal business.

(ii) Tradestyle, doing business, or other name by which your entity is commonly recognized.

(iii) Company Physical Street Address, City, State, and Zip Code.

(iv) Company Mailing Address, City, State and Zip Code (if separate from physical).

(v) Company Telephone Number.

(vi) Date the company was started.

(vii) Number of employees at your location.

(viii) Chief executive officer/key manager.

(ix) Line of business (industry).

(x) Company Headquarters name and address (reporting relationship within your entity).

(d) If the Offeror does not become registered in the CCR database in the time prescribed by the Contracting Officer, the Contracting Officer will proceed to award to the next otherwise successful registered Offeror.

(e) Processing time, which normally takes 48 hours, should be taken into consideration when registering. Offerors who are not registered should consider applying for registration immediately upon receipt of this solicitation.

(f) The Contractor is responsible for the accuracy and completeness of the data within the CCR database, and for any liability resulting from the Government's reliance on inaccurate or incomplete data. To remain registered in the CCR database after the initial registration, the Contractor is required to review and update on an annual basis from the date of initial registration or subsequent updates its information in the CCR database to ensure it is current, accurate and complete. Updating information in the CCR does not alter the terms and conditions of this contract and is not a substitute for a properly executed contractual document.

(g)
(1)
(i) If a Contractor has legally changed its business name, "doing business as" name, or division name (whichever is shown on the contract), or has transferred the assets used in performing the contract, but has not completed the necessary requirements regarding novation and change-of-name agreements in Subpart 42.12, the Contractor shall provide the responsible Contracting Officer a minimum of one business day's written notification of its intention to (A) change the name in the CCR database; (B) comply with the requirements of Subpart 42.12 of the FAR; and (C) agree in writing to the timeline and procedures specified by the responsible Contracting Officer. The Contractor must provide with the notification sufficient documentation to support the legally changed name.

(ii) If the Contractor fails to comply with the requirements of paragraph (g)(1)(i) of this clause, or fails to perform the agreement at paragraph (g)(1)(i)(C) of this clause, and, in the absence of a properly executed novation or change-of-name agreement, the CCR information that shows the Contractor to be other than the Contractor indicated in the contract will be considered to be incorrect information within the meaning of the "Suspension of Payment" paragraph of the electronic funds transfer (EFT) clause of this contract.

(2) The Contractor shall not change the name or address for EFT payments or manual payments, as appropriate, in the CCR record to reflect an assignee for the purpose of assignment of claims (see FAR Subpart 32.8, Assignment of Claims). Assignees shall be separately registered in the CCR database. Information provided to the Contractor's CCR record that indicates payments, including those made by EFT, to an ultimate recipient other than that Contractor will be considered to be incorrect information within the meaning of the "Suspension of payment" paragraph of the EFT clause of this contract.

(h) Offerors and Contractors may obtain information on registration and annual confirmation requirements via the internet at http://www.ccr.gov or by calling 1-888-227-2423, or 269-961-5757.

(End of clause)

252.204-7006 BILLING INSTRUCTIONS (OCT 2005)

When submitting a request for payment, the Contractor shall--

(a) Identify the contract line item(s) on the payment request that reasonably reflect contract work performance; and

(b) Separately identify a payment amount for each contract line item included in the payment request.

(End of clause)

252.225-7043 ANTITERRORISM/FORCE PROTECTION POLICY FOR DEFENSE CONTRACTORS OUTSIDE THE UNITED STATES (MAR 2006)

(a) Definition. United States, as used in this clause, means, the 50 States, the District of Columbia, and outlying areas.

(b) Except as provided in paragraph (c) of this clause, the Contractor and its subcontractors, if performing or traveling outside the United States under this contract, shall--

(1) Affiliate with the Overseas Security Advisory Council, if the Contractor or subcontractor is a U.S. entity;

(2) Ensure that Contractor and subcontractor personnel who are U.S. nationals and are in-country on a non-transitory basis, register with the U.S. Embassy, and that Contractor and subcontractor personnel who are third country nationals comply with any security related requirements of the Embassy of their nationality;

(3) Provide, to Contractor and subcontractor personnel, antiterrorism/force protection awareness information commensurate with that which the Department of Defense (DoD) provides to its military and civilian personnel and their families, to the extent such information can be made available prior to travel outside the United States; and

(4) Obtain and comply with the most current antiterrorism/force protection guidance for Contractor and subcontractor personnel.

(c) The requirements of this clause do not apply to any subcontractor that is--

(1) A foreign government;

(2) A representative of a foreign government; or

(3) A foreign corporation wholly owned by a foreign government.

(d) Information and guidance pertaining to DoD antiterrorism/force protection can be obtained **Combined Security Transition Command, Afghanistan (CSTC_A) Camp Eggers, Kabul, Afghanistan.**

(End of clause)

252.229-7001 TAX RELIEF (JUN 1997)

(a) Prices set forth in this contract are exclusive of all taxes and duties from which the United States Government is exempt by virtue of tax agreements between the United States Government and the Contractor's government. The following taxes or duties have been excluded from the contract price:

NAME OF TAX: (Offeror Insert) RATE (PERCENTAGE): (Offeror Insert)

(b) The Contractor's invoice shall list separately the gross price, amount of tax deducted, and net price charged.

(c) When items manufactured to United States Government specifications are being acquired, the Contractor shall identify the materials or components intended to be imported in order to ensure that relief from import duties is obtained. If the Contractor intends to use imported products from inventories on hand, the price of which includes a factor for import duties, the Contractor shall ensure the United States Government's exemption from these taxes. The Contractor may obtain a refund of the import duties from its government or request the duty-free import of an amount of supplies or components corresponding to that used from inventory for this contract.

(End of clause)

252.236-7001 CONTRACT DRAWINGS AND SPECIFICATIONS (AUG 2000)

(a) The Government will provide to the Contractor, without charge, one set of contract drawings and specifications, except publications incorporated into the technical provisions by reference, in electronic or paper media as chosen by the Contracting Officer.

(b) The Contractor shall--

(1) Check all drawings furnished immediately upon receipt;

(2) Compare all drawings and verify the figures before laying out the work;

(3) Promptly notify the Contracting Officer of any discrepancies;

(4) Be responsible for any errors that might have been avoided by complying with this paragraph (b); and

(5) Reproduce and print contract drawings and specifications as needed.

(c) In general--

(1) Large-scale drawings shall govern small-scale drawings; and

(2) The Contractor shall follow figures marked on drawings in preference to scale measurements.

(d) Omissions from the drawings or specifications or the misdescription of details of work that are manifestly necessary to carry out the intent of the drawings and specifications, or that are customarily performed, shall not relieve the Contractor from performing such omitted or misdescribed details of the work. The Contractor shall perform such details as if fully and correctly set forth and described in the drawings and specifications.

(e) The work shall conform to the specifications and the contract drawings identified on the following index of drawings:

Title	File	Drawing No.

See Appendix A through D

(End of clause)

Section 00800 - Special Contract Requirements

CLAUSES INCORPORATED BY REFERENCE

52.211-13	Time Extensions	SEP 2000
52.236-4	Physical Data	APR 1984
52.246-12	Inspection of Construction	AUG 1996
252.232-7003	Electronic Submission of Payment Requests and Receiving Reports	MAR 2008

CLAUSES INCORPORATED BY FULL TEXT

52.211-10 COMMENCEMENT, PROSECUTION, AND COMPLETION OF WORK (APR 1984)

The Contractor shall be required to (a) commence work under this contract within seven (7) calendar days after the date the Contractor receives the notice to proceed, (b) prosecute the work diligently, and (c) complete the entire work ready for use not later than One Hundred Eighty days after receipt of the Notice to Proceed. The time stated for completion shall include final cleanup of the premises.

(End of clause)

52.211-12 LIQUIDATED DAMAGES--CONSTRUCTION (SEP 2000)

(a) If the Contractor fails to complete the work within the time specified in the contract, the Contractor shall pay liquidated damages to the Government in the amount of $3,850.00 for each calendar day of delay until the work is completed or accepted.

(b) If the Government terminates the Contractor's right to proceed, liquidated damages will continue to accrue until the work is completed. These liquidated damages are in addition to excess costs of repurchase under the Termination clause.

(End of clause)

52.232-5000 PAYMENT FOR MATERIALS DELIVERED OFF-SITE (MAR 1995)--EFARS

(a) Pursuant to FAR clause 52.232-5, Payments Under Fixed Priced Construction Contracts, materials delivered to the contractor at locations other than the site of the work may be taken into consideration in making payments if included in payment estimates and if all the conditions of the General Provisions are fulfilled. Payment for items delivered to locations other than the work site will be limited to: (1) materials required by the technical provisions; or (3) materials that have been fabricated to the point where they are identifiable to an item of work required under this contract.

(b) Such payment will be made only after receipt of paid or receipted invoices or invoices with canceled check showing title to the items in the prime contractor and including the value of material and labor incorporated into the item. In addition to petroleum products, payment for materials delivered off-site is limited to the following items: “ See PARAGHRAPH A.”

(End of clause)

SECTION 00800

WORKERS COMPENSATION INSURANCE (DEFENSE BASE ACT) –CONSTRUCTION (OCT 2008)

(a) This Special Contract Requirement supplements FAR Clause 52.228-3 Workers' Compensation Insurance (Defense Base Act).

(b) The contractor agrees to procure Defense Base Act (DBA) insurance pursuant to the terms of the contract between the U.S. Army Corps of Engineers (USACE) and **CNA Insurance** unless the contractor has a DBA self-insurance program approved by the Department of Labor. Proof of this self-insurance shall be provided to the Contracting Officer. The contractor shall submit proof of a valid DBA Insurance policy with CNA Insurance for the Prime and their Subcontractor's at every tier prior to performance of the contract. The current rate under the USACE and JCC-I/A contract is **$7.50 per $100 of compensation for construction.**

(c) The contractor agrees to insert a Special Contract Requirement substantially the same as this one in all subcontracts (at every tier) to which DBA is applicable.

(d) Should the rates for DBA insurance coverage increase or decrease during the performance of this contract, USACE shall modify the contract accordingly. However, the revised rates will not be applicable until the Contractor's or Subcontractor's DBA Insurance policy is due to be renewed.

(e) Premiums will be reimbursed only if coverage is purchased through the USACE mandatory requirements DBA contract administered by CNA Insurance and their Managing Broker, Rutherfoord International.

(f) Failure to comply and purchase Defense Base Act (DBA) Insurance in accordance with FAR Clauses 52.228-3 Workers' Compensation Insurance (Defense Base Act), from the U.S. Army Corps of Engineers mandatory Insurance Carrier/Broker (CNA Insurance/Rutherfoord International) for the Prime and all of the Subcontractors at every tier, shall be considered a material breech and could cause your contract to be terminated for default/cause.

SECTION 00800 SPOT

CLASS DEVIATION 2007-O0010, IMPLEMENTATION OF THE SYNCHRONIZED PREDEPLOYMENT AND OPERATIONAL TRACKER (SPOT) TO ACCOUNT FOR CONTRACTOR PERSONNEL PERFORMING IN THE UNITED STATES CENTRAL COMMAND AREA OF RESPONSIBILITY.

(i) "Performance in the United States Central Command Area of Responsibility (USCENTCOM AOR)" means performance of a service or construction, as required by the contract. For supply contracts, production of the supplies or associated overhead functions are not covered, but services associated with the acquisition of the supplies are covered (e.g., installation or maintenance).

(ii) If a contract requires performance in the USCENTCOM AOR, but some personnel performing the contract are authorized to accompany the U.S. Armed Forces, and other personnel performing the contract are not authorized to accompany the U.S. Armed Forces, include in the solicitation and contract both the clause at DFARS 252.225-7040 and the clause provided by Class Deviation 2007-O0010. Paragraph (b)(1) of each clause limits the applicability of the clause to the appropriate personnel. There are differences between the two clauses, primarily in Government support to contractor personnel (e.g., security protection and limited medical treatment) and potential applicability of the Uniform Code of Military Justice to contractor employees that are authorized to accompany the U.S. Armed Forces.

(iii) The requirements of paragraph (g) of the clause in Class Deviation 2007-O0010 are not applicable to subcontracts for which the period of performance of the subcontract is less than 30 days.

(iv) In exceptional circumstances, the head of the agency may authorize deviations from the requirements of Class Deviation 2007-O0010, in accordance with FAR Subpart 1.4 and DFARS Subpart 201.4.

(v) Registration in SPOT.

(A) Register for a SPOT account at https://spot.altess.army.mil .

(B) The customer support team must validate user need. This process may take 2 business days. Company supervisors will be contacted to determine the appropriate level of user access.

(vi) Access to SPOT. Upon approval, all users will access SPOT at https://spot.altess.army.mil .

(vii) SPOT Questions. Refer SPOT application assistance questions to the Customer Support Team at (717) 506-1368 or spot@technisource.com .

(End clause)

SECTION 00800 AI CLAUSES

AI 22.1 Prohibition Against Human Trafficking, Inhumane Living Conditions, and Withholding of Employee Passports (5 Nov 07):

All contractors ("contractors" herein below includes subcontractors at all tiers) are reminded of the prohibition contained in Title 18, United States Code, Section 1592, against knowingly destroying, concealing, removing, confiscating, or possessing any actual or purported passport or other immigration document, or any other actual or purported government identification document, of another person, to prevent or restrict or to attempt to prevent or restrict, without lawful authority, the person's liberty to move or travel, in order to maintain the labor or services of that person, when the person is or has been a victim of a severe form of trafficking in persons.

Contractors are also required to comply with the following provisions:

1) Contractors shall only hold employee passports and other identification documents discussed above for the shortest period of time reasonable for administrative processing purposes.

2) Contractors shall provide all employees with a signed copy of their employment contract, in English as well as the employee's native language that defines the terms of their employment/compensation.

3) Contractors shall not utilize unlicensed recruiting firms, or firms that charge illegal recruiting fees.

4) Contractors shall be required to provide adequate living conditions (sanitation, health, safety, living space) for their employees. Fifty square feet (50 sf) is the minimum acceptable square footage of personal living space per employee. Upon contractor's written request, contracting officers may grant a waiver in writing in cases where the existing square footage is within 20% of the minimum, and the overall conditions are determined by the contracting officer to be acceptable. A copy of the waiver approval shall be maintained at the respective life support area.

5) Contractors shall incorporate checks of life support areas to ensure compliance with the requirements of this Trafficking in Persons Prohibition into their Quality Control program, which will be reviewed within the Government's Quality Assurance process.

6) Contractors shall comply with international laws regarding transit/exit/entry procedures, and the requirements for work visas. Contractors shall follow all Host Country entry and exit requirements.

Contractors have an affirmative duty to advise the Contracting Officer if they learn of their employees violating the human trafficking and inhumane living conditions provisions contained herein. Contractors are advised that contracting officers and/or their representatives will conduct random checks to ensure contractors and subcontractors at all tiers are adhering to the law on human trafficking, humane living conditions and withholding of passports.

The contractor agrees to incorporate the substance of this clause, including this paragraph, in all subcontracts under his contract.

(End)

AI 25.1 Armed Personnel – Incident Reports (Jul 08): All Contractors and subcontractors in the Multi-National Forces-Iraq (MNF-I)/Combined Joint Task Force (Afghanistan) theater of operations shall comply with and shall ensure

that their personnel supporting MNF-I/CJTF forces are familiar with and comply with all applicable orders, directives, and instructions issued by the MNF-I/CJTF Commander relating to force protection and safety.

For IRAQ: Contractors shall provide an initial report of all weapons firing incidents to the Reconstruction Operations Center (ROC) as soon as practical based upon the situation and shall submit a written report to a ROC within 48 hours. The initial report will include the name of the company, where the incident occurred, time when the incident occurred, a brief description of the events leading up to the incident, and a point of contact for the company. A follow-up, comprehensive written report of events surrounding the firing of weapons will be provided to the ROC within 96 hours. Reports shall be submitted to the ROC, Operations Section (or as otherwise directed): roc.ops@aegisiraq.com, DSN 318-239-4301, VOIP 703-544-1370, MCI 914-822-5302, IRENA 07902-7762300, Thurman 8821621157354, and IMMERSED 870764061257.

For AFGHANISTAN: Report all incidents and use of weapons through your military chain of command, who will notify the JOC Watch at Bagram AF. (JOC SHIFT DIRECTOR, DSN: 318-431-4116; SVOIP: 431-7108) Information should include: the name of the company, where the incident occurred, time when the incident occurred, a brief description of the events leading up to the incident, and a point of contact for the company. The JOC Watch duty officer will issue guidance for further reporting requirements.

Contractors will also provide first aid and request MEDEVAC of injured persons, and remain available for Coalition response forces based upon the situation. In the event contractor personnel are detained by US or Coalition Forces, prolonged detention due to lack of proper identification can be alleviated by contractor personnel possessing on their person information that includes the Contractors name, the contract number, a POC in the Contractor management, and the phone number of the ROC/JOC Watch.

-End -

AI 25.2 Fitness for Duty and Limits on Medical/ Dental care in Afghanistan (5 Nov 07).

The contractor shall perform the requirements of this contract notwithstanding the fitness for duty of deployed employees, the provisions for care offered under this section, and redeployment of individuals determined to be unfit. The contractor bears the responsibility for ensuring all employees are aware of the conditions and medical treatment available at the performance. The contractor shall include this information and requirement in all subcontracts with performance in the theater of operations.

The contractor shall not deploy an individual with any of the following conditions unless approved by the appropriate CENTCOM Service Component (ie. ARCENT, CENTAF, etc.) Surgeon: Conditions which prevent the wear of personal protective equipment, including protective mask, ballistic helmet, body armor, and chemical/biological protective garments; conditions which prohibit required theater immunizations or medications; conditions or current medical treatment or medications that contraindicate or preclude the use of chemical and biological protectives and antidotes; diabetes mellitus, Type I or II, on pharmacological therapy; symptomatic coronary artery disease, or with myocardial infarction within one year prior to deployment, or within six months of coronary artery bypass graft, coronary artery angioplasty, or stenting; morbid obesity (BMI >/= 40); dysrhythmias or arrhythmias, either symptomatic or requiring medical or electrophysiologic control; uncontrolled hypertension, current heart failure, or automatic implantable defibrillator; therapeutic anticoagulation; malignancy, newly diagnosed or under current treatment, or recently diagnosed/treated and requiring frequent subspecialist surveillance, examination, and/or laboratory testing; dental or oral conditions requiring or likely to require urgent dental care within six months' time, active orthodontic care, conditions requiring prosthodontic care, conditions with immediate restorative dentistry needs, conditions with a current requirement for oral-maxillofacial surgery; new onset (< 1 year)) seizure disorder, or seizure within one year prior to deployment; history of heat stroke; Meniere's Disease or other vertiginous/motion sickness disorder, unless well controlled on medications available in theater; recurrent syncope, ataxias, new diagnosis (< 1year) of mood disorder, thought disorder, anxiety, somotoform, or dissociative disorder, or personality disorder with mood or thought manifestations; unrepaired hernia; tracheostomy or aphonia; renalithiasis, current; active tuberculosis; pregnancy; unclosed surgical defect, such as external fixeter placement; requirement for medical devices using AC power; HIV antibody positivity;

psychotic and bipolar disorders. (Reference: Mod 8 to USCENTCOM Individual Protection and Individual/Unit Deployment Policy, PPG-Tab A: Amplification of the Minimal Standards of Fitness for Deployment to the CENTCOM AOR).

In accordance with military directives (DoDI 3020.41, DoDI 6000.11, CFC FRAGO 09-1038, DoD PGI 225.74), resuscitative care, stabilization, hospitalization at Level III (emergency) military treatment facilities and assistance with patient movement in emergencies where loss of life, limb or eyesight could occur will be provided. Hospitalization will be limited to emergency stabilization and short-term medical treatment with an emphasis on return to duty or placement in the patient movement system. Subject to availability at the time of need, a medical treatment facility may provide reimbursable treatment for emergency medical or dental care such as broken bones, lacerations, broken teeth or lost fillings.

Routine and primary medical care is not authorized. Pharmaceutical services are not authorized for routine or known prescription drug needs of the individual. Routine dental care, examinations and cleanings are not authorized.

Notwithstanding any other provision of the contract, the contractor shall be liable for any and all medically-related services or transportation rendered. In accordance with OUSD(C) Memorandum dated January 4, 2007, the following reimbursement rates will be charged for services at all DoD deployed medical facilities. These rates are in effect until changed by DoD direction.

Inpatient daily rate: $1,918.00. Date of discharge is not billed unless the patient is admitted to the hospital and discharged the same day.

Outpatient visit rate: $184.00. This includes diagnostic imaging, laboratory/pathology, and pharmacy provided at the medical facility.

(End)

AI 25.3 Compliance with Laws and Regulations (5 Nov 07).

The Contractor shall comply with, and shall ensure that its personnel and its subcontractors and subcontractor personnel at all tiers obey all existing and future U.S. and Host Nation laws, Federal or DoD regulations, and Central Command orders and directives applicable to personnel in Iraq and Afghanistan, including but not limited to USCENTCOM, Multi-National Force and Multi-National Corps fragmentary orders, instructions and directives. Contractor employees performing in the USCENTCOM Area of Operations are under the jurisdiction of the Uniform Code of Military Justice (UCMJ). Under the UCMJ, U.S. commanders may discipline contractor employees for criminal offenses. Contractors shall advise the Contracting Officer if they suspect an employee has committed an offense. Contractors shall not permit an employee suspected of a serious offense or violating the Rules for the Use of Force to depart Iraq or Afghanistan without approval from the senior U.S. commander in the country.

(End)

AI 25.4 Quarterly Contractor Census Reporting (12 Nov 07).

The prime contractor will report upon contract award and then quarterly thereafter, not later than January, 1 April, 1 July and 1 October, to JCCI.J2J5J7@pco-iraq.net for Iraq and to BGRMPARC-A@swa.army.mil for Afghanistan the following information for the prime contract and all subcontracts under this contract:

(1) The total number of contract employees performing on the contract who receive any support benefits, including but not limited to billeting, food, use of exchanges, laundry by host nation, US Nationals, and Third Country Nationals;
(2) The total number of prime contract employees performing on the contract by host nation, US Nationals, and Third Country National;

(3) The total number of subcontractor employees performing on the contract by subcontractor, host nation, US Nationals, and Third Country National;
(4) The company names and contact information of its subcontractors at all tiers; and
(5) The name of all company POCs who are responsible for entering and updating employee data in the Synchronized Predeployment & Operational Tracker (SPOT) IAW DFAR 252.225-7040 DOD class deviation 2007-O0004 or DFAR DOD class deviation 2007-O0010.

(End)

AI 25.6 Arming Requirements and Procedures for Private Security Company (PSC) Contracts, Personal Security Detachment (PSD) Contracts, and for Requests for Personal Protection in Iraq and Afghanistan (Jul 2008)

General. Contractor and its subcontractors at all tiers that require arming under this contract agree to obey all laws, regulations, orders, and directives applicable to the use of private security personnel in Iraq and Afghanistan, including US CENTCOM, Multi-National Force Commander and Multi-National Corps Commander orders, instructions and directives. Contractors will ensure that all employees, including employees at any tier of subcontracting relationships, armed under the provisions of this contract, comply with the contents of this clause and with the requirements set forth in the following:

(1) DODI 3020.41, Contractor Personnel Authorized to Accompany the US Armed Forces;
(2) DFARS 252.225-7040, Contractor Personnel Supporting a Force Deployed Outside the United States; (MAR 2008)
(3) Class Deviation 2007-O0010, Contractor Personnel in the United States Central Command Area of Responsibility
(4) CPA Order #17, Registration Requirements for Private Security Companies, dated 27 Jun 04;
(5) US CENTCOM Policy Letter, Mod 1, Personal Protection and Contract Security Service Arming, dated 7 Nov 2006

b. Required Government Documentation. The unit requesting the contractor security shall provide a description of the following to the arming approval authority and to the contracting officer:

(1) The specific location where the PSC will operate;
(2) The persons and/or property that require protection;
(3) The anticipated threat;
(4) The required weapon types; and
(5) The reason current security/police forces are inadequate.

c. Required Contractor Documentation. Contractors and their subcontractors at all tiers that require arming approval shall provide the following to the contracting officer representative (COR):

(1) Documentation that each employee who will be armed under the contract received the following training—

(A) Weapons Qualification/Familiarization. All employees must meet the qualification requirements established by any DoD or other U.S. government agency
(B) Law of Armed Conflict (LOAC);
(C) Rules for the Use of Force (RUF), as defined in the US CENTCOM Policy, dated 23 December 2005; and
(D) Distinction between the above-prescribed RUF and the Rules of Engagement (ROE), which are applicable only to military forces.

(2) Completed DD Form 2760 (or equivalent documentation) for each armed employee, indicating that the employee is not otherwise prohibited under U.S. law from possessing the required weapon or ammunition.

(3) One (1) copy of a business license from the Iraqi or Afghani Ministry of Trade or Interior;
(4) One (1) copy of an operating license (or a temporary operating license) from the Ministry of Interior;

(5) A communications plan that, at a minimum, sets forth the following:

(A) The contractor's method of notifying military forces and requesting assistance where hostilities arise or combat action is needed;
(B) How relevant threat information will be shared between contractor security personnel and U.S. military forces; and
(C) How the contractor will coordinate transportation with appropriate military authorities.

(6) An acceptable plan for accomplishing background checks on all contractor and subcontractor employees who will be armed under the contract. The contractor shall, at a minimum, perform the following (which will be specifically addressed in its plan and which will be documented and furnished to the COR upon completion):

(A) Use one or more of the following sources when conducting the background checks: Interpol, FBI, Country of Origin Criminal Records, Country of Origin US Embassy Information Request, CIA records, and/or any other records available;
(B) Verify with MNC-I or Afghanistan RCE – CG Provost Marshal that no employee has been barred by any commander within Iraq or Afghanistan; and
(C) Certify, after completing all checks, that all persons armed under this contract are not prohibited under U.S. law from possessing a weapon or ammunition.

d. Required Contractor Acknowledgements. Contractors and their subcontractors at all tiers that require arming approval will provide written acknowledgement of the following to the COR:

(1) Penalties for Non-Compliance. Failure of contractor or subcontractor employee(s) to comply with the laws, regulations, orders, and rules (including those specified herein) governing the use of force may result in the revocation of weapons authorization for such employee(s). Where appropriate, such failure may also result in the total revocation of weapons authorization for the contractor (or subcontractor) and sanctions under the contract, including termination.
(2) Criminal and Civil Liability. Arming of contractor or subcontractor employees under this contract may subject the contractor, its subcontractors, and persons employed by the same, to U.S. and Host Nation prosecution and civil liability. "Host Nation" refers to the nation or nations where services under this contract are performed.
(3) Lapses in Training. Failure to successfully retrain an employee who is armed under this contract within twelve (12) months of the last training date will constitute a lapse in the employee's authorization to possess and carry the weapon. All unauthorized employees will immediately surrender their weapon to the contractor and will remain unarmed until such time as they are retrained and the COR determines that the retraining is sufficient.

e. Authorized Weapon & Ammunition Types. Unless DCDRUSCENTCOM (or a designee) provides otherwise, all arming requests and authorizations for contractor or subcontractor employees under this contract shall be limited to U.S. Government-approved weapons and ammunition. This restriction applies to all weapons in the possession of contractor employees, even if such weapons are required for personal protection. The following weapons and ammunition are currently authorized by the U.S. Government for use in Iraq and Afghanistan:

(1) The M9, M4, M16, or equivalent (e.g. .45 CAL, AK-47).
(2) The M9 or equivalent sidearm will be the standard personal protection weapon unless other weapons are specifically requested and approved.
(3) US government Ball ammunition is the standard approved ammunition.

f. Requirements for Individual Weapons Possession. All employees of the contractor and its subcontractors at all tiers who are armed under this contract must:

(1) Possess only those U.S. Government-approved weapons and ammunition for which they are qualified under the training requirements of section (c);
(2) Carry weapons only when on duty or at a specific post;
(3) Not conceal any weapons, unless specifically authorized;
(4) Carry proof of authorization to be armed. Employees not possessing such proof will be deemed unauthorized and must surrender their weapon to their employer; and
(5) IAW USCENTCOM G.O. #1, consumption of alcohol in Iraq or Afghanistan is prohibited. In the event of a suspension or and exception to G.O. #1, employees shall not consume any alcoholic beverage while armed or within eight (8) hours of the next work period where they will be armed.

g. Weapons/Equipment Restrictions and Responsibilities. Unless otherwise provided, the U.S. Government will not provide any weapons or ammunition to contractors, their subcontractors, or any employees of the same. The Contractor will provide all weapons and ammunition to those employees that will be armed under the contract. The contractor and its subcontractors at all tiers will also provide interceptor body armor, ballistic helmets, and the Nuclear, Biological, and Chemical (NBC) protective masks to those employees that require such equipment in the performance of their duties.

h. Rules for the Use of Force (RUF). In addition to the RUF and ROE training referenced in paragraph (c), the contractor and its subcontractors at all tiers will monitor and report all activities of its armed employees that may violate the RUF. Prompt reporting demonstrates a desire by the contractor and its subcontractors to minimize the impact of any violations and, therefore, will be given favorable consideration. Violations of the RUF include, though are not limited to:

(1) Taking a direct part in hostilities or combat actions, other than to exercise self-defense;
(2) Failing to cooperate with Coalition and Host Nation forces;
(3) Using deadly force, other than in self-defense where there is a reasonable belief of imminent risk of death or serious bodily harm;
(4) Failing to use a graduated force approach;
(5) Failing to treat the local civilians with humanity or respect; and
(6) Detaining local civilians, other than in self-defense or as reflected in the contract terms.

i. Retention and Review of Records. The Contractor and all subcontractors at all tiers shall maintain records on weapons training, LOAC, RUF and the screening of employees for at least six (6) months following the expiration (or termination) of the contract. The Contractor and its subcontractors at all tiers shall make these records available to the Contracting Officer or designated representative, at no additional cost to the government, within 72 hours of a request.

j. Contractor Vehicles. Vehicles used by contractor and subcontractor personnel in the course of their security duties shall not be painted or marked to resemble US/Coalition or host nation military and police force vehicles.

k. Quarterly Reporting. The prime contractor will report quarterly (i.e. NLT 1 January, 1 April, 1 July and 1 October for each quarter of the calendar year) to the Contracting Officer responsible for this contract, and any other organization designated by the Contracting Officer, the following information under this contract:

(1) The total number of armed civilians and contractors;
(2) The names and contact information of its subcontractors at all tiers; and

A general assessment of the threat conditions, adequacy of force numbers, and any problems that might require a change to force levels. Note: this information is in addition to the information the contractor promises to immediately provide under the communications plan referenced at paragraph (c)(5).

SECTION 01010

SCOPE OF WORK – DESIGN BUILD FOR SOUTHPARK IMPROVEMENTS

1.0 GENERAL

The project consists of the design and construction of the following projects:

(1) New Entry Control Point (ECP)
(2) Class I Warehouse Facility (cooler/freezer warehouse, office support facilities and fenced storage area) (note this is an option item) and
(3) RSOI Facility consisting of three (3) two-story barracks, an Administration / MWR / Training Facility and related support facilities on Kandahar Air Base, Afghanistan.

There are 3 project sites (one site per project) as shown on the site plan, Appendix A. Contractor shall use Government furnished concept building design with site plan solution provided at Appendix A to complete design and construction documents and construct the faculties. The project is defined as the design, material, labor, and equipment to construct buildings, parking, utilities and other infrastructure. The work within this contract shall meet and be constructed in accordance with current U.S. design and International Building Codes (IBC), Life Safety Codes (NFPA-101), Force Protection and security standards. A partial listing of references is (see specifications 01015 for a full listing of code and other references):

IBC, International Building Codes 2006
NFPA 101, Life Safety Codes
UFC 4-010-01, DoD Minimum Anti-Terrorism Standards for Buildings.

1.1 ENGLISH LANGUAGE REQUIREMENT

All documents prepared, and all conversations conducted, pursuant to work to be performed by the Contractor under the provisions of this task order shall be in the English language. The contractor shall have a minimum of one English speaking representative on-site at all times when work is in progress. The Contracto's on-site representative shall be capable of effective communications, both orally and in writing, with the Contractor Officer and his/her authorize representatives. If any document written pursuant to the requirements of this contract is in the English language, and any other language, only the English language version shall be official.

1.2 SUBMITTALS

Submittals and a Submittal Register are required as specified in Section 01335 of the Basic Contract.

1.3 CQM TRAINING REQUIREMENT

Before project design and construction begin, the Contractor's Quality Control Manager is required to have completed the U.S. Army Corps of Engineers CQM course, or equivalent. The Construction Trades Training Center (CTTC) in Jalalabad, Afghanistan provides a course that satisfies the requirement. Courses are offered at regular intervals. For enrollment and course information contact CTTC at the following:

Mhd. Haris
e-mail: mharis@afghanreconstruction.org
Telephone: 0700 08 0602

Pervaiz
e-mail: adpzmuj@yahoo.com

Telephone: 0700 61 3133

A copy of the course completion certificate shall be included in the Design Analysis submittal.

1.4 CQM TRAINING REQUIREMENT

Before project design and construction begin, the Contractor's Quality Control Manager is required to have completed the U.S. Army Corps of Engineers CQM course, or equivalent. Courses are offered at regular intervals. For enrollment and course information, contact Reed B. Freeman at the following:

Reed B. Freeman, PhD, PE
Quality Assurance Branch
Afghanistan Engineer District, USACE
Email: reed.b.freeman@usace.army.mil
Telephone: 079-760-4396

A copy of the course completion certificate shall be included in the Design Analysis submittal.

USACE Guide Specification 01451, entitled "Contractor Quality Control", 3.5.D. requires approval of the Contractor's CQC Plan. That approval is contingent upon the successful completion of this course by the Contractor's Quality Control Manager.

1.5 SECURITY AND FORCE PROTECTION MEASURES

(a) Kandahar Air Field (KAF) is an active Military Installation. The base commander has the legal authority and is empowered to take such actions as may be prudent and reasonable to insure the security of the base and the health and safety of all personnel on the base.
(b) Prior to the start of any field activity the contractor shall coordinate all field actions with the Contracting officer. The contractor shall ensure all personnel requiring admittance to KAF are process through base security and obtain such clearance, badges and/or access authorizations as required by the base security and operations. Personnel admittance is the sole responsibility of the contractor and any sub-contractors.
(c) The contractor, to include any and all personnel admitted onto KAF pursuant to this contract, shall recognize the following: the contractor, including all personnel admitted onto KAF shall not deviate, depart of differ from any verbal guidance concerning safety and force protection issues as directed by the contracting officer. A safe and secure workplace is the responsibility of the contractor.

1.6 ENVIRONMENTAL CONSIDERATIONS

The scope of work, associated specifications and the construction/operations of the facilities identified in this contract do not create any obligations, commitments, or requirements on the part of the US Government beyond those obligations, commitments or requirements already in-force based upon existing bi-lateral or multilateral treaties, agreements and or understanding concerning the protection of the environment.

2.0 LOCATION

The site is located at 3 sites at Kandahar Air Base, Afghanistan, as shown on attached drawings. Exact boundary markers are not provided nor coordinates, rather, the contractor is to construction facilities within the sites shown on the drawings in accordance with Force Protection site constraints outlined in specification section 01015 and the site plan as shown on appendix A.

3.0 UNEXPLODED ORDNANCE (UXO)

3.1 UXO REMOVAL AND CLEARANCE

The contractor is not responsible for the clearance or removal of mines and unexploded ordnance (UXO) from the site prior to the commencement of construction.

It is the responsibility of the Contractor to be aware of the risk of encountering UXO or mines and to take all actions necessary to assure a safe work area to perform the requirements of this contract. The Contractor assumes the risk of any and all personal injury, property damage or other liability arising out of or resulting from any Contractor action taken hereunder. The Contractor and its subcontractors may not handle, work with, move, transport, render safe, or disarm any UXO or mine, unless they have appropriate accreditations from MAC.

If a UXO or mine is encountered during project construction, UXO or mine disposal shall be handled in accordance with Section 01015, Technical Requirements.

4.0 SUMMARY OF WORK

4.1 CONTRACTOR REQUIREMENTS

The contractor shall design and construct the facilities as a design-construct contract and shall be in accordance with the requirements stated in Section 01015: Technical Requirements. Refer to attachment following this section for more specifics for required spaces. Design and construction work shall include but not be limited to that shown within attached tables and described below.

4.1.1 GENERAL REQUIREMENTS FOR FACILITIES

All requirements set forth in the Scope of Work, but not included in the Technical Requirements, shall be considered as set forth in both, and vice versa. Provide heating, ventilation and air conditioning (HVAC) for all facilities unless otherwise stated in sections 01010 or 01015. All toilets shall be western -style.

All standard construction amenities and details such as HVAC, lighting, site drainage, utility connections, etc. shall be implied as a design and construction requirement. Drawings referenced are contained in Appendix A. Concrete walkways are required to connect all buildings, facilities, and features such as parking lots, power plants, etc.

Design and Construct circulation pathways and exit stairs in accordance with building code references herein. Automatic fire sprinkler system is required for the RSOI barracks only. The ECP and Class I warehouse facilities do not require sprinkler protection. The facility shall comply with all other safety requirements as required within references. Smoke detectors and fire alarm systems shall be installed in accordance with requirements herein.

The design and construction work shall include but not be limited to the following sub-paragraphs.

In general, this project consists of designing and constructing of the following:

4.1.2 Base Bid

The bid schedule is divided by project facility and site. There are 3 projects located on 3 different sites, as reflected by the bid schedule. All bid items are Lump Sum quantities with no unit costs; the contractor is to provide a total cost for each item.

4.1.2 (a) RSOI Expansion Facility

Schedule of Base Bid Items

Work Item	Description

0001	Mob/Demobilization
0002	Design Work
0003	Construct Barracks Buildings (2) two each
0003A	Renovate MWR / Admin / Training facility
0004	Construct Electrical Generators and Distribution (Exterior)
0005	Construct Limited Water, Fire Protection, Limited Sewer and Storm Drainage
0006	Construct Aggregate Surface Course Roads and Walkways
0007	Site Improvement and Demolition
0007AA	Topographical Survey
0007AB	Geotechnical Investigations
0007AC	Other Site Improvement and Demolition Work
0008	Construct Information Systems Duct Banks (Exterior)
0009	As-Built Drawings

Schedule of Optional Bid Options

0010	Optional Item # 1 – Construction ½ Barracks Building #3
0010AA	Optional Item # 1 – Construction ½ Barracks Building #3

4.1.2 (b) Entry Control Point (ECP)

Schedule of Base Bid Items

Work Item	Description
0001	Mob/Demobilization
0002	Design Work
0003	Construct Entry Control Point
0003AA	Construct Vehicle Inspection Area and Sunshade Structure
0003AB	Construct Driver Waiting Area
0003AC	Construct Bus Scan and Access Facility
0003AD	Construct Guard Force (Admin) Building
0003AE	Construct Kennels
0003AF	Construct Contractor Driver Waiting Area
0003AG	Construct Fencing and Walls
0003AH	Construct Barriers and Walls
0003AI	Construct Gravel Roads and Parking
0003AJ	Construct Pop-Up Barrier and Drop Arm
0003AK	Construct Wadi Crossing
0004	Construct Guard Towers
0005	Access Road
0006	Site Electrical and Communications Work
0007	Site Water and Sewer Work (limited to building service connection, piping and fittings
0008	Site Storm Drainage Work (limited to building site grading and drainage)
0009	Site Topographic Survey
0010	As-Built Drawings

Schedule of Optional Bid Options

0011	Optional Item # 1 – Additional Site Communications Work
0012	Optional Item # 2 – Asphalt Pavement Access Road
0013	Optional Item # 3 – Asphalt Pavement Areas Specific within the ECP

4.1.2 (c) Class I Warehouse Yard – all items are optional

Schedule of Optional Base Bid Items

Work Item	Description
0001	Mob/Demobilization
0002	Design Work
0003	Construct Warehouse Freezer Building

0004	Construct Storage Yard Office and Driver Facility
0005	Construct Covered Storage Facility # 1
0005AA	Construct Covered Storage Facility # 2
0005AB	Construct Covered Storage Facility # 3
0006	Site Electrical Distribution Work
0007	Site Water, Fire Protection and Sewer Work
0008	Aggregate Surfacing Course Storage Yard
0009	Relocate Refrigerated Building
0010	Relocate Shelters (2)
0011	Storm Drainage and Site Improvements (includes wash rack)
0011AA	Storm Drainage
0011AB	Site Improvements
0011AC	Topographic Survey
0011AD	Geotechnical Investigations
0012	Construct Information Systems Duct Bank (Exterior)
0013	As-Built

Schedule of Optional Bid Options to the Optional Base Bid Items

0014	Optional Item # 1 – Construct Covered Storage # 1
0015	Optional Item # 2 – Construct Covered Storage # 2
0016	Optional Item # 3 – Construct Covered Storage # 3

4.2 SITE PLANNING

The Contractor shall prepare a site boundary survey and site plan for each site based on information contained in the Request for Proposal. The development of the master plan will include participation in several design charrettes conducted at the Kandahar Area Office. Contractor shall verify all space requirements and code compliance in accordance with sections 01010 and 01015 of this contract.

4.3 DEMOLITION AND GRADING

The contractor shall demolish all existing structures at each site prior to commencement of new work. The Contractor shall remove and dispose of all debris, concrete, and foundations and any other remains of the existing structure. The Contractor shall choose and propose a location for disposal resulting from demolition for approval by the Contracting Officer. The Contractor shall perform complete final site grading after installation of all required drainage structures per the Drainage Plan that shall be prepared as part of these projects and after installation of any other buried utilities or other project components.

4.4 WATER SYSTEM

For both the ECP and Class I Yard, design and construct a temporary Non-Potable Water System (NPWS)., The NPWS shall be constructed to deliver a minimum 345-414 kPa (50-60 psi) at a flow rate that is twice the required daily demand. The storage tanks shall provide capacity for a minimum of 100 percent of the required daily demand or as directed in the contract requirements for each facility detailed in this section of the contract. The storage tank and distribution system shall be designed to provide a minimum 276 kPa (40 psi) at ground level at all points in the delivery systems. Minimum pressures of 207 kPa (30 psi), under peak domestic flow conditions, can be tolerated in isolated areas as long as all peak flow requirements in the entire system can be satisfied. Maximum water pressures in distribution mains and service lines shall not exceed 517 kPa (75 psi) at ground elevation. Water demand required for fire fighting and for irrigation and landscaping needs shall not be included in design demand calculations for the temporary water tanks.

For the RSOI facilities, design and construct properly sized service connections for water distribution supply line connection to facility. Connection shall be done by others.

4.5 SANITARY SEWER & TREATMENT SYSTEM

For ECP and Class I facility, the sanitary sewer collection and holding tanks shall be designed and constructed by the Contractor. The sanitary sewer collection system shall consist of gravity sewer pipe network and accessories such as manholes, cleanouts, and building service connections.

The sanitary sewer system shall be designed to accommodate the total facility compound population as specified in the Scope of Work and verified by the contractor.

System capacity shall be calculated based on a hydraulic waste load equivalent to 80 percent of the water usage rate of 190L per capita day, or 152L per capita day.

The gravity sewer collection system shall connect to temporary sanitary sewer holding tanks. Contractor shall construct sanitary sewer connection points for connection to the future air field sanitary sewer infrastructure.

Temporary sanitary sewer holding tanks shall be provided and installed underground and positioned in areas easily accessible to pumping trucks.

For the RSOI facilities, the contractor is to design and construct properly sized sanitary sewer building connections to be attached to a sanitary sewer collection system which is to be supplied by others.

4.6 SITE ELECTRICAL DISTRIBUTION SYSTEM

The contractor shall design an electrical power system to supply and distribute power to all facilities included in the contract to include generation and fuel storage, and underground distribution. All electrical design and installation shall meet NEC (NFPA 70) requirements. Conductors and circuits shall be sized for the specific loads. Primary voltage shall be 4160/208 VAC, 60 hertz. Secondary voltage shall be 208/120 VAC, 60 hertz.

Local electrical distribution system (utility) power is available, the contractor shall provide:

(a) A connection to that system to utilize utility power as the prime source for the site;

(b) Generators with fuel storage to provide a backup source for the site; and

(c) A underground electrical distribution system.

4.7 NOT USED

4.8 LIGHTING

General lighting shall be provided as indicated and shall meet recommendations from IESNA for each building type and function within each building. Design and installation shall meet NEC 70 requirements.

Exterior lighting shall be high intensity discharge luminaries on 10 meter high minimum spun aluminum or galvanized steel poles. If to be installed on an existing installation, type of luminaries shall match existing predominant type within installation.

4.9 GEOTECHNICAL

Existing geotechnical information is not available at the project site. Any site-specific geotechnical data required to develop foundations, materials, earthwork, and other geotechnical related design and construction activities for this project shall be the Contractor's responsibility. The Contractor shall develop all pertinent geotechnical design and construction parameters by appropriate field and laboratory investigations and analyses. The Contractor shall produce a detailed geotechnical report

containing field exploration and testing results, laboratory testing results (particle sizes and distribution, liquid and plastic limit test, and moisture and density test, etc). Information in the report shall include, but not limited to: existing geotechnical (e.g. surface and subsurface) conditions, location of subsurface exploration logs on site plan, exploration point, allowable soil bearing capacity and foundations recommendations, bearing capacity, pavement design criteria (e.g. CBR values, K values), ground-water levels, and construction materials (e.g. concrete cement, asphalt, and aggregates). Two copies of the detailed geotechnical report shall be submitted to the Contracting Officer.

Foundations, including sub-grade, shall be designed and constructed based on recommendations from geotechnical investigation required herein.

4.10 FORCE PROTECTION

Facilities shall be sited with FP design in mind. As much as possible and practicable FP designs shall be accomplished by appropriate stand-off distances and setbacks away from potential threats. Force Protection design shall be in accordance with section 1015, Technical Requirements. Force Protection

4.11 FENCING AND BARRICADES

Fencing shall consist of the types shown or described herein.

4.12 ROAD NETWORK, SIDEWALK, AND PARKING

The Contractor shall design and construct the entire road and parking network. The roads shall be designed to carry traffic of up to an 18 ton three-axle vehicle. A storm drainage system shall also be included. The road layout shall provide access to entry control points, parking lots, vehicle maintenance facilities, fuel points, generator yard, sewage septic tank, and the trash collection point. Provide parking areas for vehicles for the following facilities inside the compound.

Road design shall be designed per Section 01015, Technical Requirements. Roadways and sidewalks are required as shown on attached drawings and shall be designed and constructed based upon recommendations from geotechnical analysis as required herein.

The Contractor shall design and provide landscaping for the compound. Design and provide a network of concrete sidewalks to connect the buildings. Sidewalks shall be wide enough to be used as fire-lane or service roads. Provide outdoor benches, lighting, and gathering areas.

4.13 TRASH POINT

The Contractor shall design, in a location convenient for easy removal, a trash collection point for each site as part of the site work per the base bid schedule items. There will be several trash points at each facility to be included as part of the design package as determined by the contractor shall be located outside each facility. The trash point shall be a 1800 mm x 1800 mm concrete pad with a 1800 mm height chain link fence around the perimeter. One side shall have a 1200 mm wide gate entrance. Trash Points shall have a metal roof covering. Each of the three projects contained within this project scope shall have trash points, the location to be determined by the Contracting Officer during construction.

4.14 RSOI COMPOUND FACILITIES – See Appendix A for reference drawings

4.14.1 Barrack Facilities

The contractor shall design and construct the RSOI buildings (three (3) two-story buildings). Each building shall be designed to house one thousand (1000) occupants on cots (no private sleeping areas required). The foundations, pre-engineered buildings (PEB), concrete masonry unit (CMU) walls, and associated features shall be designed and constructed in accordance with all applicable regulations,

guidance, codes, standards and the concept drawing information contained in Appendix A. The structures shall meet IBC seismic protection requirements.

a. Layout : Each RSOI building shall be internally divided into (1) eight sleeping area bays, four on the first floor and four on the second floor (2) four shower/latrine units, two on the first floor, two on the second floor (3) eight mechanical rooms, four on the first, four on the second and (4) a minimum of four interior exit stairways and four exterior exit stairways (interior stairways must be one hour fire rated enclosed).

The contractor shall provide all necessary grading to insure adequate drainage. The contractor shall design and construct fire alarm access roads (gravel surface) and personnel bunkers as shown on Appendix A.

b. Foundations: the contractor shall design and construct foundations fo rhte three RSOI building in accordance with the American Concrete Institute (ACI) building code requirements for structural concrete.

c. Pre-Engineer Buildings: the contractor shall design and construct a pre-engineered structural steel building on a concrete foundation including seals/sealants, closures, anchors and other hardware and accoutrements required for full weather-poof functionality, to include complete building envelope enclosure for climate controlled spaces. The pre-engineered buildings shall include exterior walls, support beams, second story floors, roof structures, and associated hardware (doors, windows, latrines, mechanical equipment, HVAC, plumbing, wiring, etc).

The pre-engineered building is a structural shell; the interior of the building must be design and constructed suitable for habitation and will include:

- The building shall be insulated and climate controlled.
- The sleeping areas shall contain electrical receptacles along the walls at 2500 mm spacing. CATV and telephone outlets are provide as directed by the Contracting Officer.
- Egress stairways shall be provided in accordance with the NFPA 101 Life Safety Code requirements.
- All interior spaces in the buildings shall be lighted.

d. Concrete Masonry Unit (CMU) Walls: On the interior side of the pre-engineer building exterior wall, the contractor shall construct two-story height CMU walls (200 mm thickness, each cell fully grouted and reinforced) on all four sides of each building. Additionally, the structure shall be divided into four quadrants by CMU Walls. All CMU walls shall extend from floor slab to floor slab to roof joists to form a continuous barrier. The CMU Walls divide each building into eight compartmentalized sleeping areas (four on the first floor plus four on the second floor) within the footprint of the building. The contractor is to refer to the Technical specifications (01015) and scope of work direction is given for all disciplines for the contractor to construct a complete building project and appendix A for a general building plan. All interior walls shall be CMU construction.

e. Heating, Ventilation and Air Conditioning (HVAC): The HVAC system shall be a central ducted system and ceiling fans shall be provided each room for additional summer ventilation. There is a need for a mechanical room; the contractor shall make the size determination as part of the design effort.

f. Fire Protection: the contractor shall design and install a fire suppression system (sprinkler system) and other fire protection features for each building as required by the UFC 3-600-1. All interior stairways shall be one hour fire rated; this achieved by 100 mm thickness CMU walls; see appendix A for floor plans. All fire walls shall be CMU construction.

Existing from the first floor shall be through the exterior doors from each unit at grade level. Existing from the second floor shall be though doors in fire rated enclosures (one-hour fire rating) leading to interior and exterior stairs.

Fire sprinkler protection is required per the UFC 3-600-01 requirements.

A fire alarm system is required.

g. Windows: Windows shall be located on the first and second floors as indicated on the Government furnished conceptual drawing (appendix A) and shall be extruded aluminum.

h. Doors: Door located on the first and second floors as indicated on the Government furnished drawings. Exterior doors shall be insulated hollow metal doors. Interior doors shall be metal except PVC shall be used for toilet staff doors and shower rooms.

i. Utilities: The contractor shall connect the utilities (water, wastewater and electric power service) in the building to the temporary utilities to be installed at t he project site per the requirements of sections 4.4/4.5/4.6 of this scope of work section 01010. The contractor shall design and construct the utilities for the RSOI building to facilitate the connection of the utilities from the buildings to permanent utilities when those become available.

j. Anti-terrorism / Force Protection Measures: The contractor shall design and construct the RSOI building in accordance with Joint Security Directorate Anti-terrorism/Force Protection Guide, March 2002. Force Protection design shall also meet the requirements of UFC 4-010-01, Design: Minimum Antiterrorism Standoff Distances for Buildings, 8 Oct 2003 and Joint Security Directorate Antiterrorism/Force Protection Guide, March 2002.

The contractor shall construct all applicable force protection/anti-terrorism measures required by the above references, and such measures as may be specified by Kandahar Airfield Force Protection Office. Force protection/anti-terrorism measures are noted on the government furnished conceptual drawing provides in Appendix A.

4.14.2 MWR Administration Facility

a. Existing Structure

There is an existing steel frame “butler-type” building to the east of where the three (3) RSOI barrack buildings are to be constructed; location is noted on the Government furnished conceptual drawings. The existing building has a wall height of five meters, a length of thirty meters, and a width of ten meters (5M x 30M x 10M). The existing building is used to support vehicle maintenance operations. There does not appear to have been any special modifications to the structure (no overhead crane, maintenance pits, or underground storage tanks) to support maintenance operations.

The existing steel frame “butler-type” building shall be used to house the MWR facility for the RSOI complex. Beyond that required to install plumbing, utilities, doors, and windows, there is no demolition required to modify the existing structure in order to renovate the structure. All equipment will be removed and the inside of the structure will be cleaned by the US Government prior to the start of construction activities. The existing wall and roof insulation can be re-used. Modification of the existing structure shall be in accordance with the concept drawing information contained in Appendix A.

b. Structural Modification to Existing Structure

The contractor shall design and construct a second story inside the existing structure, two fire rated (2 hours) interior stair enclosures at opposite ends of the structure, specified enclosed areas, utilities, and specified features. Interior columns are allowed for structural support. The second story shall be at such a height to provide nine (9) feet in height clearance from floor to first floor ceiling. The second

story, internal concrete masonry unit (CMU) walls, and utilities shall be designed and constructed in accordance with the concept drawing information contained in Appendix A. The second story shall de designed to meet anticipated loads. The modified structure shall meet IBC seismic requirements. All floors within the structure shall be carpeted from wall to wall, and the interior surfaces finished in accordance with the specifications provided in section 01015 of this contract.

c. Layout

The contractor shall construct the following features inside the existing structure:

The first floor shall be used as an open area training hall with the following space constraints:

(1) The contracts shall design and construct latrine facilities [dimensions of the latrines?]. There shall be one male and one female latrine. The contractor shall enclose the areas where the latrines are to be located with CMU walls of at least one hundred millimeters in thickness. The male latrine shall have three (3) urinals, seven (7) toilets with enclosures, and five (5) sinks with mirrors. The female toilet shall have three (3) toilets with enclosures and two (2) sinks with mirrors. The contractor shall be required to modify the floor/foundation of the existing structure to allow for the installation of plumbing associated with the water/wastewater required by the latrines. In addition, each latrine shall be provided with a ventilation fan or window, electrical outlets, door, and appropriate hardware (i.e, toilet paper holders, paper towel dispensers, etc).

(2) The contractor shall design and construct a communications room. The communications room shall enclose an area of nine (9) square meters. The contractor shall enclose the area where the communications room is to be located with CMU walls of at least one hundred millimeters in thickness.

(3) The contractor shall design and construct a storage room. The storage room shall enclose an area of eighteen (18) square meters. The contractor shall enclose the area where the storage room is to be located with CMU walls of at least one hundred millimeters in thickness.

The second floor shall be used for recreation and admin purposes and shall contain the following spaces

(1) The contractor shall design and construct three (3) administration offices, each office enclosing an area of ten (10) square meters. The contractor shall enclose the area where the storage room is to be located with CMU walls of at least one hundred millimeters in thickness. The offices shall be provided with a door, and shall have at least one (1) window.

(2) The contractor shall design and construct one (1) large administration office; enclosing an area of thirty (30) square meters. The contractor shall enclose the area where the storage room is to be located with CMU walls of at least one hundred millimeters in thickness. The offices shall be provided with a door, and shall have at least one (1) window.

(3) The contractor shall design and construct a communications room. The communications room shall enclose an area of nine (9) square meters. The contractor shall enclose the area where the communications room is to be located with CMU walls of at least one hundred millimeters in thickness. The offices shall be provided with a door, and shall have at least one (1) window.

(4) The contractor shall design and construct a storage room. The storage room shall enclose an area of eighteen (18) square meters. The contractor shall enclose the area where the storage room is to be located with CMU walls of at least one hundred millimeters in thickness. The offices shall be provided with a door.

(5) The contractor shall design and construct a MWR telephone room. The telephone room shall enclose an area of twenty (20) square meters. The contractor shall enclose the area where the storage room is to be located with CMU walls of at least one hundred millimeters in thickness. The room shall be provided with a door, and shall have at least one (1) window.

(6) The contractor shall design and construct a MWR TV/recreation room. The MWR TV/recreation room shall enclose an area of eighty (80) square meters. The contractor shall enclose the area where the storage room is to be located with CMU walls of at least one hundred millimeters in thickness. The room shall be provided with a door, and shall have at least one (1) window.

(7) The contractor shall design and construct a MWR Internet Café room. The café shall enclose an area of twenty (20) square meters. The contractor shall enclose the area where the storage room is to be located with CMU walls of at least one hundred millimeters in thickness. The room shall be provided with a door, and shall have at least one (1) window.

(8) The contractor shall design and construct a MWR game room. The game room shall enclose an area of eighty (80) square meters. The contractor shall enclose the area where the storage room is to be located with CMU walls of at least one hundred millimeters in thickness. The room shall be provided with a door, and shall have at least one (1) window.

d. Concrete Masonry Unit (CMU) Walls

The contractor shall refer to the technical specifications provided in section 01015 of this contract for specifics regarding the design and construction of the CMU walls.

e. Heating, Ventilation, and Air Conditioning (HVAC)

The existing air conditioning unit may be reused; its suitability must be ascertained as part of this contract. The contractor shall design and construct a heating system for the structure. Perform-ance of the HVAC system shall be consistent with that required of the heating system for the RSOI barracks buildings.

The HVAC system may be a central ducted system or split units. Ceiling fans will be provided in each open area and room for additional summer ventilation. There may be a need for a mechanical room; if necessary, the contractor will make the size determination as part of the design effort and include the data in their design submittals.

f. Fire Protection

The contractor shall design and install a fire suppression system (sprinkler system) and other fire protection features for each building as may be required by UFC 3-600-1 and/or NFPA 101. All interior stairways shall be one hour fire rating; this will be achieved by 100 mm thickness CMU walls; see appendix A for floor plans.

Exiting from the first floor shall be through exterior doors at grade. Exiting from the second floors shall be through doors in fire rated enclosures (one-hour fire rating) leading to interior and exterior stairs.

g. Windows

Windows shall be situated on the first and second floors as indicated by this scope of work and on the Government furnished conceptual drawing. Windows shall be extruded aluminum.

h. Doors

The existing roll up doors shall be removed and replaced with a suitable metal siding. Doors shall be installed as indicated on the Government furnished conceptual drawing. Exterior doors shall be insulated hollow metal doors. Interior doors shall be metal except PVC shall be used for interior doors at toilet, and shower rooms

i. Utilities

The contractor is to connect the utilities (water, wastewater, + electric service) in the building to the temporary utilities to be installed at the project site per the requirements of section 4.4/4.5/4.6 of this scope of work. The contractor shall design and construct the utilities for the MWR building in accordance with the Government furnished conceptual drawings, and shall facilitate the connection of the utilities from the buildings to permanent utilities when those become available.

j. Anti-terrorism /Force Protection Measures

The contractor shall design and construct the RSOI buildings in accordance with Joint Security Directorate Antiterrorism/Force Protection Guide, March 2002. Force Protection design shall also meet the requirements of UFC 4-010-01, Design: Minimum DoD Antiterrorism Standards for Buildings, 8 Oct 2003 and UFC 4-010-02, DoD Minimum Antiterrorism Standoff Distances for Buildings, 8 Oct 2003 and Joint Security Directorate Antiterrorism/Force Protection Guide, March 2002.

The contractor shall construct all applicable force protection/anti-terrorism measures required by the above references, and such measures as may be specified by Kandahar Airfield Force Protection Officer. Force protection/anti-terrorism measures are noted on the Government furnished conceptual drawing provided in Appendix A.

4.14.4 Special Utility Requirements

4.14.4 (a) Civil Requirements:
All roads are considered fire lanes, and minimum dimensions shown on the conceptual drawing shall be adhered to.
Roads Graded with Aggregate Surface Course (ASC)
Walkways – Graded Aggregate Surface Course material

Site Grading and Drainage – Site grading and drainage pattern shall route surface runoff from the buildings using 5% slope from building foundation extending to 10 feet. Surface slope continues at a rate of 2% +/- to existing external/internal proposed lined or unlined open channels or swales with 1;3 side slopes. Lined or stabilized channels can increase side sloping if suitable. Typical conventional drainage features include: culverts, sub-surface piping. Hydraulic structures shall include manholes, junction boxes, inlets and energy dissipaters. Design shall also include erosion control and rip rap protection. Design in accordance with guidelines outlined in UFC 3-230-17FA or TM 5-820-4/AFM 88-5.

Personnel Bunkers – provide sufficient quantity to house 3000 PN and of construction meeting UFC 4-010-01 requirements..

Anti-terrorism measures- included with architectural requirements.

4.14.4 (b) Water Supply Requirements

IMPORTANT NOTE: The RSOI 3,000 Population Housing (included in this project) and future BDE 1,500 Population (not included in this project) Housing complexes will be co-located will require a temporary, interim treated, non-potable water facility that will include water storage, pumping and possibly chlorination, the temporary water supply for the RSOI is not part of the project. A permanent water supply facility is planned to service both the RSOI and BDE Housing with the capability to connect to the new KAF/NATO water distribution network upon its completion.

Water Supply, Pumping, Storage and Distribution System

- For the RSOI facilities, design and construct properly sized service connections for water distribution water supply line connection to facility. Water service connections shall be made on the building sides adjacent to the service roads. Connection shall be done by others.

- **For both the ECP and Class I Yard**, design and construct a temporary Non-Potable Water System (NPWS)., The NPWS shall be constructed to deliver a minimum 345-414 kPa (50-60 psi) at a flow rate that is twice the required daily demand. The storage tanks shall provide capacity for a minimum of 100 percent of the required daily demand

4.14.4 (c) Wastewater Collection, Pumping and Treatment

Sanitary Sewer Collection

- For ECP and Class I facility, the sanitary sewer collection and holding tanks shall be designed and constructed by the Contractor. The sanitary sewer collection system shall consist of gravity sewer pipe network and accessories such as manholes, cleanouts, and building service connections.
- For the RSOI facilities, the contractor is to design and construct properly sized sanitary sewer building connections to be attached to a sanitary sewer collection system which is to be supplied by others. Sanitary Sewer service connections shall be made on the building sides adjacent to the service roads.

4.14.4 (d) Communications Requirements

Communications access as follows will be provided to each of three housing units, each for 1000 troops, and miscellaneous supporting buildings. Each large housing unit will be provided with 25 copper cable pairs and 12 single mode fiber optic cables for fire phones and other government official use. The other buildings will be furnished with one 25 pair copper cable and one 12 strand single mode fiber optic cable each, except for the mayors' office, which will have an additional two (2) 12 stand fiber optic cables for American SIPR net and Coalition Centrix secure systems.

The RSOI project will install a manhole under a new 5400 pair cross connect distribution box , (equipped with blocks for 2700 cable pairs right above Motor pool road . The cross connect box will be connected to the U.S. manhole outside of the U.S ADN. with six, 4 inch (110mm PVC conduits). Two of the conduits will be Multiducts(four inch PVC with four (4) 30mm minimum factory installed inner-ducts. The Motor pool road cross connect will be connected to the U.S. ADN cross connect cabinet by a 900 pair copper cable. Two non secure single mode fiber optic cables, one 208 strands and one 144 strands along with two 48 strand single mode fiber optic cables, one for SIPR and one for Centrix secure systems will be installed from the U.S. ADN relay racks to the Motor Pool cross connect manhole, where they will be cleared and capped in the splice closure splice trays.

4.14.4 (e) Electrical Requirements

The physical installation of the RSOI consist of a series of three (3) two-story housing facilities to support US force troop surge at KAF. This complex of buildings will include MWR, administrative and training facilities. This project requirement is to design and construct facilities with adequate power, lighting and lighting controls. Construction will include emergency lighting, exit signs, special purpose outlets and exterior lighting in accordance with all applicable codes. Temporary power must be provided to a Temporary Water supply system.

Prime power for the RSOI project will be supplied initially by a stand-alone Generator Sets. . Preliminary loads indicate a maximum load 250 KW per each two (2) story building, but generator installed under this project must be sized to meet the size's total load calculations. The system must be provided with an ATS and an I-Line Main Distribution Panel. Generator set basic requirements must be as follows; rated for continuous operation, 50/60Hz, 120/208V, 0.8 P.F. Lagging, 72 hours operation diesel fuel tank, skid mounted, de-rated for site available fuel, elevation and temperatures, must comply with applicable Mil standards for Generator Sets.

The ATS will be capable of carrying all design currents and allow for future connection to site power from future Power Plant. Provide conduits for future connection to underground service. Provide a ground and grounding system per NEC and other applicable specifications.

A dual system of two (2) 75KW Generators Set (prime/back-up) will be provided under this project to support a Temporary Water Supply System (TWSS). An Automatic Transfer Switch will alternate between prime and back-up generators. This system will be removed once a permanent water supply system is in place.

The Prime Generator Set, Distribution panel, ATS, Dual TWSS Generator Set and a space for a future 300KVA Dry-type 4160Y/120-208V/60Hz transformer will be mounted on a concrete pad with an effective layout providing adequate clearances among components and space for fuel vehicle delivery for safe re-fueling.

Electrical system distribution will be installed underground, with power panels established at critical locations for ease of access, security and maintainability. Electrical system will be sized to include electronic equipment and HVAC loads.

There are existing HV underground cables in the vicinity where the proposed RSOI building complex is to be erected. All excavations need to be coordinated with the COMKAF command to relocate or provide temporary power under this project to existing facilities.

4.15 Entry Control Point Facility

The function of the entry control point (ECP) is to restrict and control all visitors to Kandahar Air Field. The ECP at this location (shown on appendix A) is to be designed to inspect and control large vehicles with a secondary purpose of pedestrian badging and control entering the air field. This facility consists of: (1) entrance gate house (2) visitor parking lot (3) kennel (4) admin facility (5) separate search area facilities for both pedestrians and truck drivers (6) separate personnel biometric facilities for both pedestrians and truck drivers (7) USG Furnished/Contractor Installed truck scanner (combination of radiation and explosive scanning capabilities) (8) separate pedestrian and truck driver covered waiting areas (9) scanner control building (10) guard houses as shown (11) guard towers as shown (12) concrete barriers (combination of Texas (1070 mm height) and Alaska (4000 mm height) concrete barriers – no HESCO barriers for this project; see existing barriers at KAF for examples) (13) pop-up barriers and drop arm barriers (14) tactical vehicle gate opening (15) rerouting of existing wadi to drain storm water off the project site. (16) return pass facility The contractor is responsible for connecting to existing utilities. Site lighting is required. The entire ECP is surrounded by a chain link fence, height = 3000 mm with concertina outriggers. Roadways are gravel surface, with the option to pave sections are directed by the contracting officer.

4.15.1 Entrance Gate House

Construct a new entrance gate house (3000 x 3000 mm) with climate control, standard force protection requirements to resist ballistic threat as described in the references in specifications 01015 with an adjoining drop arm barrier.

4.15.2 Visitor Parking Lot

Construct a new gravel surface parking lot (75 x 75 meters) as shown on appendix A. See specifications 01015 for gravel paving requirements.

4.15.3 Kennel

Construct a new CMU block kennel to house four working dogs used for the search processes. The kennel requires climate control(HVAC via split type unit) and sufficient ventilation. Electricity, roofing

and lighting are required. Additionally, a supply water (hose spigot) and floor drainage (connected to sanitary sewer system) are required.

4.15.4 Administration (Guard Force) Building

Construct a new 110 SM admin (Guard Force) building, pre-manufacturer module construction to house admin functions with one 10 SM private office. The facility requires climate control and two single toilet rooms. See appendix B for the technical specifications of the pre-manufactured building modules.

4.15.5 Search Area Facility

Construct new 2440 mm x 6080 mm pre-manufactured module unit facilities (one each) for the searching of pedestrians and truck drivers

4.15.6 Biometric Area Facility

Construct new 2440 mm x 6080 mm pre-manufactured module unit facilities (one each) for the biometric scanning of pedestrians and truck drivers. The facility will be used for pass and ID purposes. Each scanner (USG provided) will require a window within the facility and a sliding drawer for pass issuance. Note a concrete barrier must be placed between the biometric and search area facilities; they are collocated as the search is conducted first, followed by the biometric. Both facility functions are fenced.

4.15.7 Truck Scanning

The truck scanner is USG furnished equipment and contractor installed. Additionally, the contractor is responsible for the utility conduit to the scanning facility and any foundation, etc work required to make the scanner fully operational. Technical data for the scanner will be provided to the contractor during the design period of this contract.

4.15.8 Waiting Areas

One each waiting area shelter for pedestrians and truck drivers, to be separated by a 3000 mm height fence. Each waiting area is 15 x 15 meters, steel construction, open sided with metal roofing.

4.15.9 Scanner Control Building

Construct a new 2440 mm x 6080 mm pre-manufactured module unit facility to house the scanner control equipment (USF furnished and installed). The facility requires climate control.

4.15.10 Guard Houses

Construct new 2000 mm x 2000 mm guard houses as shown, to meet force protection requirements as detailed in specifications 01015.

4.15.11 Guard Towers

Construct new guard towers as shown (see existing on KAF), hardened facilities built in accordance with force protection requirements as detailed in specifications 01015. The existing “DynCorp” hardened guard tower, located at ECP # 4 is the standard referred to the contractor to meet.

4.15.12 Concrete Barriers

Construct new concrete barriers (both Alaska and Texas) in areas shown on appendix A. The barriers shall be connected by wire or other means to act in unison.

4.15.13 Pop-Up Barriers

Provide new pop-up barriers as noted on the appendix A. Technical details are given in specifications section 01015.

4.15.14 Tactical Vehicle Gate Opening

Provide an opening in the existing fence for a new gate, with drop arm and guard house, for tactical vehicles EXITING Kandahar Air Field.

4.15.15 Rerouting of the Existing Wadi

Reroute, with a concrete drainage structure, the existing wadi to follow the length of the ECP, this includes a low water crossing structure for the new road way entering the ECP, and a new concrete culvert over the wadi between the ECP and the base entrance. The low water crossing is approximately 18 meters in length of concrete paving on the road surface. The purpose of the concrete pavement is to allow water run-off over the road surface during high water periods without damage to the road. The contractor shall determine the wadi size required to control the storm drainage in the area. The goal is to divert this storm drainage away from the ECP; the contractor is not required to consider the impact of drainage away from the ECP. The contractor shall consider the area outside the ECP to determine if a significant erosion threat exists and notify the Contracting Officer as part of the design effort.

4.15.16 Return Pass Facility

At a location as directed by the contracting officer, the contractor shall construct a new return pass facility. This function of this facility is for base pass holders to return their passes at the end of a work day. The facility shall be a new 2440 mm x 6080 mm pre-manufactured module unit with climate control required.

4.15.17 Special Utility Requirements

4.15.17 (a) Electrical

The physical installation of the ECP consist of a series of roadways, security towers and buildings to provide effective, safe and secure access of heavy equipment and truck deliveries. This project requirement is to design and construct adequate lighting and lighting control, and power services to meet force protection procedures for roadways and security towers. Construction will support buildings and other structures electrical loads in compliance with applicable codes.

Prime power for the ECP project will be supplied initially by a stand-alone Generator Set.. Preliminary loads indicate a maximum load 250 KW , but the generator installed under this project must be sized to meet the site's total load calculations. The system must be provided with an automatic transfer switch (ATS) and an I-Line Main Distribution Panel. Generator set basic requirements must be as follows; rated for continuous operation, 50/60Hz, 120/208V, 0.8 P.F. Lagging, 72 hours operation diesel fuel tank, skid mounted, de-rated for site available fuel, elevation and temperatures, must comply with applicable Mil standards for Generator Sets.

The ATS will be capable of carrying all design currents and allow for future connection to site power from future Power Plant. Provide conduits for future connection to underground service. Provide a ground and grounding system per NEC and other applicable specifications.

The Generator Set, Distribution panel, ATS and a space for a future 300KVA Dry-type 4160Y/120-208V/60Hz transformer will be mounted on a concrete pad with an effective layout providing adequate clearances among components and effective space for fuel vehicle delivery for safe re-fueling.

Electrical distribution system for offices, control room, site HID lighting, electric gates, security towers and other facilities will be under ground, with power panels established at critical locations for ease of

access, security and maintainability. Electrical system will be sized to include control room electronic equipment and HVAC loads.

4.15.17 (b) Grading Requirements
Site Grading and Drainage – Site grading and drainage pattern shall route surface runoff from the buildings using 5% slope from building foundation extending to 10 feet. Surface slope continues at a rate of 2% +/- to existing external/internal proposed lined or unlined open channels or swales with 1;3 side slopes. Lined or stabilized channels can increase side sloping if suitable. Typical conventional drainage features include: culverts, sub-surface piping. Hydraulic structures shall include manholes, junction boxes, inlets and energy dissipators. Design shall also include erosion control and rip rap protection. Design in accordance with guidelines outlined in UFC 3-230-17FA or TM 5-820-4/AFM 88-5.

4.15.17 (c) Communications

NOTE: The following describes the end-state buildout scope of communication provision for the ECP and is provided for information purposes only. Contractor is only responsible for providing materials, equipment and labor for interim supply to and communications facilities within the confines of the ECP.

The ECP project will require 50 pair copper cable and a 72 strand single mode fiber optic cable from the NATO ADN to the ECP area. 25 pair copper and six strand single mode fiber optic cable will be provided for the six guard towers and fiber and copper will be provided for the other buildings in the ECP complex. The tower 25 copper pairs will be multiplied (meaning all 25 pairs terminated at each tower).

A manhole/handhole and duct system will be installed around Tropic Lightning road (the hypotenuse of the South park top triangle – the contracting officer will identify) in the ECP project. The manholes and duct will connect to the future manhole and duct system for the South Park area.

The cable will be connected to the U.S. manhole outside of the NATO ADN and be routed to the NATO ADN via the conduit from the U.S. manhole to the NATO ADN. The copper cable will be terminated on the NATO copper main distribution frame and the fiber optic cable will be terminated on the fiber optic main distribution frame. The contract will install three (3) 32mm polyethylene or PVC inner ducts in one existing 4 inch (110mm) PVC conduit from the U.S. manhole to the NATO ADN for installation of the copper and fiber optic cable.

Interim supply of communications prior the end-state build-out described above will consist of overhead, temporary supply lines from the U.S. manhole outside of the manhole outside of the NATO and connected to a central location at the Guard Force building.

4.15.17 (d) Water Supply

Provide sufficient water storage for basic hygiene requirements necessary for permanent staff of 26 per 24 hour day. Water supply contract by others.

4.15.17 (e) Wastewater

Wastewater generated from the ECP shall be collected into storage tanks for removal by others. Sanitary requirements will be augmented by portable facilities. Waste water and sanitary removal contract by others.

4.16 CLASS I WAREHOUSE FACILITY – all items are bid options in this scope of work – see Appendix A for drawings

The overall scope of work for this facility is to construct a new warehouse facility to contain: cold storage warehouse, relocated cold storage warehouse, relocated canvas covered storage shelters (2 each), new canvas covered storage shelters (6 each), driver rest facility, admin office facility, a vehicle washrack

and fencing with gates to surround and act as security for these aforementioned facilities. The contractor is to connect to existing utilities.

4.16.1 Storage Yard

The site (shown on appendix A) is approximately 71,000 SM in size. This area is to be gravel surface and the facilities located as shown. There should be at least 36.5 meters in clearance from each structure. The site contains 3000 mm height chain link fencing with concertina outriggers and gates as shown. The yard will support the storage of CONEX boxes, as many as remaining space allows.

4.16.2 Administration Building

Construct a new admin building, 128 SM, to be constructed from pre-manufactured modular type materials as described in the RSOI barracks section of this specification. There shall be two private offices @ 9 SM each, the remaining space for open area office. HVAC is required. Two unisex toilet rooms are required.

4.16.3 Cold Storage Facility

Construct a new cold storage facility, 2300 SM, to be constructed from a structural steel building facility (known as a “Butler” type building) of sufficient height to allow for pallet storage with forklift operation, not to exceed 5000 mm clear height. The floor surface is concrete, 150 mm minimum thickness and shall support forklift operations. Roll up doors (4000 mm x 4000 mm) are required. Insulation and refrigeration shall be part of the design package to reviewed by the Government. The facility will contain 40 freezer/refrigerated units which are considered part of this contract. The building requires fire sprinkler protection.

4.16.4 Relocated Cold Storage Facility

Relocate the existing cold storage facility (requires disassembly and re-assembly of the existing structure) with new foundation. The existing facility is on Kandahar AF, less than 1 km in distance.

4.16.5 Relocated Canvas Shelters

Relocate two existing canvas shelters and the steel superstructure (requires disassembly and re-assembly of the existing structure) with new foundation. The existing facility is on Kandahar AF, less than 1 km in distance.

4.16.6 New Canvas Shelters

This is an option to this bid option item. The function of the shelters is to provide shade for bottled drinking water pallets. The shelter shall be constructed of a canvas surface with a steel superstructure, connected to a concrete foundation.

4.16.7 New Wash Rack

Construct a new wash rack, 6000 mm x 18,000 mm, concrete pad for six washing stations at the location shown on the site plan, Appendix A.

4.16.8 New Driver Rest Facility

Construct a new pre-manufactured material driver rest facility, 6000 mm x 10,000 mm, with heating and air conditioning, at the location shown. The purpose of this facility is to provide space for drivers to break from their driving duties. A single toilet room is required. Some kitchen equipment (sink and counter) is required.

4.16.9 Special Utility Requirements

4.16.9 (a) Sewage Flow Rate

Sewage flow 80% of the ADD Water Use.

4.16.9 (b) Sewage Treatment and Management

Provide sanitary sewer service connection to sewage holding tank(s). Temporary holding tank system shall have a design provision for future connection to the NATO master plan sanitary sewer system.

4.16.9 (c) Communications Requirements

The existing class 1 supply yard will be re-located to South park between 6th street and 7th street (new nomenclature to match the Castle Map). The class 1 yard will have a requirement for 25 copper cable pairs and 12 single mode fiber strands.

4.16.9 (d) Electrical Requirements

This project consist of providing Electrical power to relocate Cold Storage and Freezers equipment along with new administrative, food staging and site lighting requirements. This project requirement are to design and construct facilities with adequate power, grounding, lighting and lighting controls. Construction will include emergency lighting, exit signs, special purpose outlets, exterior lighting and battery charging station in accordance with all applicable codes.

Each bank of twenty (20) Freezer containers will be fed by a Generator Set. Prime power for the Class I will be power by each stand-alone Generator-Set distributed throughout the site according to a layout being developed by the Architect. Preliminary loads indicate a maximum load 250 KW at each site, but the generator installed under this project must be sized to meet the site's total load calculations. Each Generator Set system must be provided with an automatic transfer switch (ATS) and an I-Line Main Distribution Panel. Generator set basic requirements must be as follows; rated for continuous operation, 50/60Hz, 120/208V, 0.8 P.F. Lagging, 72 hours operation diesel fuel tank, skid mounted, de-rated for site available fuel, elevation and temperatures, must comply with applicable Mil standards for Gen-Sets.

The ATS will be capable of carrying all design currents and allow for future connection to site power from future Power Plant. Provide conduits for future connection to underground service. Provide a ground and grounding system per NEC and other applicable specifications.

The Prime Generator Set, Distribution panel, ATS, Dual TWSS Generator Set and a space for a future 300KVA Dry-type 4160Y/120-208V/60Hz transformer will be mounted on a concrete pad with an effective layout providing adequate clearances among components and space for fuel vehicle delivery for safe re-fueling.

Electrical system distribution will installed underground with power panels established at critical locations for ease of access, security and maintainability. Electrical system will be sized to include electronic equipment and HVAC loads.

4.16.9 (e) Civil Requirements:

Site Grading and Drainage – Site grading and drainage pattern shall route surface runoff from the buildings using 5% slope from building foundation extending to 10 feet. Surface slope continues at a rate of 2% +/- to existing external/internal proposed lined or unlined open channels or swales with 1;3 side slopes. Lined or stabilized channels can increase side sloping if suitable. Typical conventional drainage features include: culverts, sub-surface piping. Hydraulic structures shall include manholes, junction boxes, inlets and energy dissipaters. Design shall also include erosion control and rip rap protection. Design in accordance with guidelines outlined in UFC 3-230-17FA or TM 5-820-4/AFM 88-5.

4.16.9 (f) Water Supply

Packaged Pre-Fabricated & Pre-Engineered Duplex Pump Station w/Hydro-pneumatic tank. Note that the packaged system may also include an underground potable storage tank connected to the booster pump(s) and hydro-tank.
Two (2) 1500-2000 Gal Polyethlyene Ground Storage Tanks (Above Ground)
Disinfection by chlorination using diaphragm pump or hypo-chlorinator solution injection system

5.0 COMPLETION OF WORK

The work of this contract is phased as follows:
Phase I: RSOI barracks and MWR facility. All work required under this scope of work for 1 complete and useable Barracks building and MWR facility shall be completed within 180 calendar days including government review time from the Notice to Proceed. Work on the second barracks building shall be completed within 210 calendar days after Notice to Proceed. Work on the thrid Barracks building shall be completed within 240 calendar days after notice to proceed of that option item. Liquidated damages for work remaining after the 180 day period are accessed at $3,850.00 for each calendar day of work required to complete the contract. The remaining work described in Phase I shall be completed within 360 calendar days from Notice to Proceed.

Phase II: Entry Control Point: All work required under this scope of work shall be completed within 360 calendar days including government review time from the Notice to Proceed. Liquidated damages for work remaining after the 360 day period are accessed at $3,850.00 for each calendar day of work required to complete the contract.

Phase III: Class I Warehouse: this is an optional bid item. All work required under this scope of work shall be completed within 360 calendar days from the notice to proceed of this option item including government review time. Liquidated damages for work remaining after the 360 day period are accessed at $3,850.00 for each calendar day of work required to complete the contract.

The liquidated damages listed in each Phase do not stack, and therefore, will be limited to $10,000 per day regardless of number of Phases past Contract Completion date.

6.0 SPARE PARTS

Refer to other sections herein for requirements.

7.0 REFERENCES

Refer to Section 01015 for required references.

-- End of Section --

SECTION 01015

TECHNICAL REQUIREMENTS – DESIGN/BUILD SOUTH PARK IMPROVEMENTS

1.0 GENERAL

This contract consists of three diverse projects, the RSOI barracks project, the Entry Control Point project and the Class I warehouse project. The items listed within this specification represent the totality of the diverse technical requirements.

1.1 COMPLIANCE

The Contractor's design and construction must comply with technical requirements contained herein. The Contractor shall provide design and construction using the best blend of cost, construction efficiency, system durability, ease of maintenance and environmental compatibility.

1.2 MINIMUM & ALTERNATE REQUIREMENTS

These design and product requirements are minimum requirements. The Contractor is encouraged to propose alternate design or products (equipment and material) that are more commonly used in the region; will be equally or more cost effective or allow for more timely completion, but furnish the same system safety, durability, ease of maintenance and environmental compatibility. The Contractor will be required to submit information as requested by the Contracting Officer to make a comparison of the proposed alternate. All variations of approved designs must be approved by the Contracting Officer.

1.3 ASBESTOS CONTAINING MATERIALS

Asbestos containing material (ACM) shall not be used in the design and construction of this project. If no other material is available which will perform the required function or where the use of other material would be cost prohibitive, a waiver for the use of asbestos containing materials must be obtained from the Contracting Officer. A certificate of non-ACM compliance is required for materials suspected of containing asbestos.

1.4 SAFETY

1.4.1 Unexploded Ordnance (UXO)

1.4.1.1 UXO/Mine Discovery during Project Construction

It is the responsibility of the Contractor to be aware of the risk of encountering UXO and to take all actions necessary to assure a safe work area to perform the requirements of this contract. If during construction, the contractor becomes aware of or encounters UXO or potential UXO, the contractor shall immediately stop work at the site of encounter, move to a safe location, notify the COR, and mitigate any delays to scheduled or unscheduled contract work. Once the contractor has informed the COR, the contractor will await further direction. The Contractor assumes the risk of any and all personal injury, property damage or other liability arising out of or resulting from any Contractor action taken hereunder.

NOTE: For previous UXO/mine information, the following points of contact from the UN Mine Action Center of Afghanistan are provided:

Mohammad Sediq, Chief of Operations,
Email: sediq@unmaca.org
Cell: +93 070 295207

Hansie Heymans, Chief Information Officer,
Email: hansie@unmaca.org
Cell: +93 070 294286

1.4.1.1 Explosives Safety

1.4.1.1.1 General Safety Considerations

General safety considerations applicable to personnel, both essential and non-essential, at project sites where UXO may be encountered include:

a. Do not carry fire or spark-producing devices.

b. Do not conduct explosive or explosive-related operations without approved procedures and proper supervision and UXO safety support.

c. Do not become careless by reason of familiarity with UXO or the reported probability level of UXO contamination.

d. Do not conduct explosive or potentially explosive operations during inclement weather.

e. Avoid contact with UXO except during UXO clearance operations.

f. Conduct UXO-related operations during daylight hours only.

g. Employ the "buddy system" at all times.

1.4.1.1.2 Activity Hazard Analysis (AHA) briefings

a. Activity Hazard Analysis's shall be prepared in accordance with the Corps of Engineers Safety and Health Requirements Manual, EM 385-1-1.

b. Hazard analyses will be prepared and briefed by personnel that are knowledgeable in UXO and explosives safety standards and requirements. These personnel should understand the specific operational requirement and hazard analysis methodologies. A hazard analysis will be performed for each activity to determine the significance of any potential explosive-related hazards. Explosive residues may be discovered or exposed during UXO operations in the form of powder or various granular and powder based pellets. These contaminants can enter the body through the skin or by ingestion if proper personal hygiene practices are not followed. Explosive fillers such as white phosphorus are dangerously reactive in air and acute exposure can result in serious injury to the skin, eyes, and mucous membranes. They are also a fire hazard.

Safety requirements (or alternatives) that will either eliminate the identified hazards, mitigate or control them to reduce the associated risks to an acceptable level will be developed. The adequacy of the operational and support procedures that will be implemented to eliminate, control, or abate identified hazards or risks will then be evaluated and a second risk assessment completed to verify that a satisfactory safety level has been achieved.

1.4.1.2 Notification of Noncompliance

The Contracting Officer will notify the Contractor of any detected noncompliance with the foregoing requirements. The Contractor shall take immediate corrective action after receipt of such notice. Such notice, when delivered to the Contractor at the work site, shall be deemed sufficient for the purpose of notification. If the Contractor fails or refuses to comply promptly, the Contracting Officer may issue an order stopping all or part of the work until satisfactory corrective action has been taken. The Contractor shall make no part of the time lost due to such stop orders the subject of claim for extension of time or

for excess costs or damages.

1.5 LIMITATION OF WORKING SPACE & INSTALLATION ACCESS AND SECURITY

The Contractor shall comply with all Base security requirements. Constant changes of installation access and security requirements on Base shall be anticipated by the contractor. Detailed requirements are listed below.

1.5.1 ACCESS AND SECURITY PROCEDURES

All contractor access and exit from the Installation will be through the Entry Control Point (ECP) as directed by the Contracting Officer. The KAF Force Protection Officer maintains the ultimate authority for establishing, monitoring, and enforcing access and security requirements for the Installation. All contractor, subcontractor, or vendor personnel and vehicles at any tier working at any location on the installation are subject to a thorough search upon entering, departing, or at any time deemed necessary by the Force Protection Office Personnel. The Contractor shall be responsible for compliance will all Installation security requirements. The Government reserves the right to deny access or to require the contractor to remove any personnel or equipment deemed to be a threat to the security of the Installation Force Protection Office or the Installation personnel. The Contractor shall work through the Contracting Officer to ensure that the Installation Security Regulations are followed.

1.5.1.1 Employee Badging Process

All contractor employees who are working on the Installation must receive a badge designating that the individual has certain rights of access onto the Installation. In order to receive this badge each employee must undergo a screening procedure in conformance with the Installation Force Protection Access Control Procedures. This process requires a written application with accompanying documents (copy of passport, evidence of Visa,); a background screening and an interview with a representative of the KAF Force Protection Office.

There are three categories of access privileges. They are: 1.) US Citizen Contractor personnel who are in possession of Common Access Card (CAC) are granted unescorted access on the installation. 2.) Third Country Nationals (TCN) from Coalition or other approved countries that have been properly vetted thru the Installation Screening System are granted unescorted access to the installation. 3.) Afghanistan Nationals that have been properly vetted thru the Installation Screening process are granted escorted access to the installation.

Contractor CAC holders or TCN badged personnel my act as escorts if approved by the Installation Force Protection Office. All TCN and LN personnel must display their access badges at all times while on the Installation. If an access badge is lost it shall immediately be reported to the Installation Force Protection Office.

Any individual, who may be banned, terminated, resigns or no longer is required to have access to the Installation will be escorted to the Installation Force Protection Office. Force Protection personnel, will collect the individual's badge, and conduct an exit interview with the employee, before allowing him/her to leave the Installation.

1.5.1.2 Identification of Contractor Vehicles

Vehicle access to the Installation shall be limited to essential official business related to execution of the contract only. Vehicle operators must be granted driving privileges on the Installation through the Installation Force Protection Office. Truck Visitor badges will be issued to vehicles that deliver materials onto the installation. The contractor must escort these individuals from the ECP and for the entire time they are on the Installation. The Contractor shall be responsible for requiring each vehicle engaged in the work to display permanent vehicular identification as approved and directed by the Contracting Officer. Each Contractor vehicle, machine, piece of equipment, or towed trailers, shall show the

Contractor's name such that it is clearly visible on both front doors of the vehicle and both sides of a towed trailer. A valid license plate shall be displayed at all times. Contractor vehicles operated on Government property shall be maintained in a good state of repair, shall be insured, and shall be registered in accordance with local law and base security requirements. Contractor shall anticipate delay for delivery trucks and vehicle access to the gate for routine security inspections.

1.5.1.3 Entry and Exit Access through Entry Control Point (ECP)

All contractor personnel not remaining on the installation in the Contractor's Life Support Area overnight shall be required to enter the installation, each morning and depart each evening through the designated Entry Control Point. Because all other Afghan national personnel who work on the installation also enter and exit through this ECP, the contractor must take appropriate steps to insure efficient, timely entry and exit.

The main installation work force begins to queue at the ECP at approximately 0700 each morning. It is highly recommended that the contractor work force begin queuing at 0600. The Local National work force entering the Installation shall be processed through several security check points. After the last security check the Force Protection personnel will match the Local Nationals with the appropriate contractor escort. The workers will then be escorted to the work site. The contractor should assume that the entry process for any group of workers may take 1-2 hours each day and exit time may take ½ hour to 1 hour.

The contractor will assign a management representative to be present at the ECP during the entrance and egress processing each day to insure the Local National work force maintains order during the process, to coordinate with the Force Protection Office personnel manning the Entry Control Point and to report on any abnormalities with the daily entry and egress process.

1.5.1.4 Limitations of Working Space

The Contractor shall, except where required for service connections or other special reason(s), confine his operations strictly within the boundaries of the three sites. Workmen will not be permitted to trespass on adjoining property. Any operations or use of space outside the boundaries of the site shall be by arrangement with all interested parties. It must be emphasized that the Contractor must take all practical steps to prevent his workmen from entering adjoining property and in the event of trespass occurring the Contractor will be held entirely responsible.

Areas located immediately outside the construction area are known to contain mines and unexploded ordnance (UXO). Contractors assume all risks when venturing in or out of the designated work area.

1.5.1.5 Security Requirements Specific to Kandahar Air Field (KAF)

The aforementioned specification sections regarding site security are presented as an overview. Specific force protection and security requirements, including badging and ID, are presented in Appendix D.

1.6 TEMPORARY STRUCTURES

The Contractor shall erect suitable temporary fences, lighting, and necessary structures to safeguard the site, materials and plant against damage or theft and for the protection of the general public and shall adequately maintain the same throughout the course of the contract.

1.7 SUBCONTRACTORS

Compliance with the provisions of this section by subcontractors will be the responsibility of the contractor.

1.8 LIST OF CODES AND TECHNICAL CRITERIA:

The following codes and technical criteria and those referenced therein shall be required for this project. References within each reference below shall be required and adhered to. This list is not exhaustive and is not necessarily complete.

AABC - Associated Air Balance Council (National Standards for total System Balance)
ACI 318 Building Code Requirements for Structural Concrete (latest edition), American Concrete Institute
Air Force Manual 32-1071, Security Engineering, volumes 1-4, 1 May 1994
American Water Works Association, ANSI/AWWA C651-99 standard
ARI - Air Conditioning and Refrigeration Institute
ASCE 7-02, Minimum Design Loads for Buildings and Other Structures, 2002
ASHRAE - American Society of Heating, Refrigeration and Air-Conditioning Engineers Handbooks: Fundamentals; HVAC Systems and Equipment; HVAC Applications; Refrigeration.
ASHRAE Standard 55-2004, Thermal Environmental Conditions for Human Occupancy
ASHRAE Standard 62.1-2004, Ventilation for Acceptable Indoor Air Quality
ASHRAE Standard 62.2-2004, Ventilation and Acceptable Indoor Air Quality for Low-Rise Residential
ASHRAE Standard 90.1-2001, Energy Standard for Buildings Except Low-Rise Residential Buildings
ASHRAE Standard 90.2-2004 with 2006 supplement, Energy-Efficient Design of Low-Rise Residential Buildings
ASME - American Society for Mechanical Engineering
ASTM - American Society for Testing and Materials
AWS - American Welding Society
DCID 6/9 Physical Security Standards for Sensitive Compartmented Information Facilities
DCID 1/21, Manual for Physical Security Standards For Sensitive Compartmented Information Facilities (SCIF)
EIA ANSI/TIA/EIA-607: (1994) Commercial Building Grounding/Bonding Requirement Standard
Factory Mutual (FM) Approval Guide-Fire Protection (2002)
IBC - International Building Codes, 2006 or latest edition (and its referenced codes including those inset below)
IFGC – International Fuel Gas Code
IMC – International Mechanical Code
IPC – International Plumbing Code
Lighting Handbook, IESNA, latest edition
MIL-HDBK-1190, Facility Planning and Design Guide
Codes and Standards of the National Fire Protection Association (NFPA) as applicable and enacted in 2002 or later, unless otherwise noted
National Electrical Safety Code (NESC), Institute of Electrical and Electronic Engineers (IEEE C2), 2007 edition
International Building Code, 2006 Edition
NFPA 10, Portable Fire Extinguishers, 2002 edition
NFPA 13, Sprinkler Systems
NFPA 20, Fire Pumps
NFPA 24, Underground Fire Service Mains
NFPA 30, Flammable and Combustible Liquids Code, 2003 edition
NFPA 30A, Code for Motor Fuel Dispensing Facilities and Repair Garages, 2003 edition
NFPA 54, National Fuel Gas Code, 2002
NFPA 58, Liquefied Petroleum Gas Code, 2004
NFPA 70, National Electrical Code, 2008 edition
NFPA 72, National Fire Alarm Code, 2007 edition
NFPA 75, Standard for the Protection of Information Technology Equipment
NFPA 90A, Air Conditioning and Ventilating Systems, 2002 edition
NFPA 101, Life Safety Code, 2009 edition

NFPA 110, Standard for Emergency and Standby Power Systems, 2005 edition
Plumbing and Drainage Institute (PDI-WH-201) water hammer arrestors
SMACNA - Sheet Metal and Air Conditioning Contractors' National Association, Standards and Guides, latest editions
International Mine Action Standards, latest edition; (see http://www.mineactionstandards.org for copy of standards)
TM 5-785 Weather Data
TM 5-802-1 Economic Studies
TM 5-805-4 Noise and Vibration
UFC 1-200-01, Design: General Building Requirements, 20 June 2005
UFC 1-300-07A Design Build Technical Requirements
UFC 3-230-03a, Water Supply, 16 Jan 2004
UFC 3-230-04a, Water Distribution, 16 Jan 2004
UFC 3-230-06a, Subsurface Drainage, 16 Jan 2004
UFC 3-230-07a, Water Supply: Sources and General Considerations, 16 Jan 2004
UFC 3-230-08a, Water Supply: Water Treatment, 16 Jan 2004
UFC 3-230-09a, Water Supply: Water Storage, 16 Jan 2004
UFC 3-230-10a, Water Supply: Water Distribution, 16 Jan 2004
UFC 3-230-13a, Water Supply: Pumping Stations, 16 Jan 2004
UFC 3-230-17FA, Drainage in Areas Other than Airfields, 16 Jan 2004
UFC 3-240-03N, Operation and Maintenance: Wastewater Treatment System Augmenting Handbook, 16 Jan 2004
UFC 3-240-04a, Wastewater Collection, 16 Jan 2004
UFC 1-300-09N, Design Procedures, 25 May 2005
UFC 3-310-01, Structural Load Data, 25 May 2005
UFC 3-400-01, Design: Energy Conservation, 5 July 2002
UFC 3-410-01FA Heating, Ventilating and Air Conditioning, Change 1, 15 May 2003
UFC 3-410-02A, HVAC Control Systems. 15 May 2003
UFC 3-410-04N, Industrial Ventilation, 25 October 2004
UFC 3-420-01, Plumbing Systems Design, 19 June 2003
UFC 3-430-01FA, Heating and Cooling Distribution Systems, 27 July 2003
UFC 3-460-01, Petroleum Fuel Facilities, 16 January 2004
UFC 3-501-03N, Electrical Engineering Preliminary Considerations, 16 Jan 2004
UFC 3-520-01, Interior Electrical Systems, 10 June 2002
UFC 3-530-01AN, Design: Interior and Exterior Lighting and Controls, 19 Aug 2005
UFC 3-540-04N Design: Diesel Electric Generating Plants, 16 Jan 2004
UFC 3-550-03FA Design: Electrical Power Supply and Distribution Systems, 1 Mar 2005
UFC 3-600-01, Design: Fire Protection Engineering for Facilities, 26 Sept 2006
UFC 4-010-01, Design: Minimum DoD Antiterrorism Standards for Buildings, 22 Jan 2007
UFC 4-010-02, DoD Minimum Antiterrorism Standoff Distances for Buildings, 19 Jan 2007
UFC 4-020-01FA, Security Engineering: Project Development, 1 Mar 2005
UFC 4-020-02FA, Security Engineering: Concept Design, 1 Mar 2005
UFC 4-020-03FA, Security Engineering: Final Design, 1 Mar 2005
UFC 4-020-04FA, Electronic Security Systems: Security Engineering, 1 Mar 2005
UFC 4-022-01, Security Engineering: Entry Control Facilities/Access Control Points, 25 May 2005
Underwriters' Laboratories (UL) Fire Protection Equipment Directory (2002)
UL Standards (as applicable)
UL 752, Bullet Resisting Equipment, 2000 or later
USCINCCENT OPORD 97-1

The publications to be taken into consideration shall be those of the most recent editions.
Unified Facility Criteria (UFC) is available online at http://www.wbdg.org/ccb/browse_cat.php?o=29&c=4

Standards other than those mentioned above may be accepted if the standards chosen are internationally recognized and meet the minimum requirements of the specified standards. The Contractor shall be prepared to submit proof of this if requested by the Contracting Officer.

2.0 SITE DEVELOPMENT

2.1 GENERAL

The project includes furnishing all materials, equipment and labor for constructing water, sanitary sewer and storm sewer service lines, as applicable, and connecting to the existing or new sewer networks.

2.2 ENVIRONMENTAL PROTECTION

2.2.1 Applicable regulations

The Contractor shall comply with all Host Nation laws, rules, regulations or standards concerning environmental pollution control and abatement with regard to discharge of liquid waste into natural streams or manmade channels. The contractor shall review host nation and U.S. Government environmental regulations with the contracting officer prior to design and discharge of any liquid wastes into natural streams or manmade channels.

2.2.2 Notification

The Contracting Officer will notify the Contractor in writing of any observed non-compliance with the foregoing provisions. The Contractor shall immediately take corrective action. If the Contractor fails or refuses to promptly take corrective action, the Contracting Officer may issue an order stopping all or part of the work until satisfactory corrective action has been taken. No extension of time or damages will be awarded to the Contractor unless it was later determined that the Contractor was in compliance.

2.2.3 Spillages

Measures shall be taken to prevent chemicals, fuels, oils, greases, bituminous materials, waste washings, herbicides and insecticides, and construction materials from polluting the construction site and surrounding area.

2.2.4 Disposal

Disposal of any materials, wastes, effluents, trash, garbage, oil, grease, chemicals, etc., shall be taken to a dumpsite off site and subject to the approval of the Contracting Officer. Burning at the project site for the disposal of refuse and debris will not be permitted. . There is no approved waste sites in Kandahar or local area suggest contractor coordinate with COMKAF or ANA to locate a proper disposal site prior to construction start.

2.3 CIVIL SITE DEVELOPMENT

2.3.1 Site Plan

The contractor shall prepare plat or plan of property as part of the design package consisting of a site boundary at Kandahar Air Field, Afghanistan. The survey shall show the closure of the property boundary consisting of identifying all property corners, establishing horizontal and vertical control listing all bearing and distances of property lines from the centerline of all adjacent roads. The contractor shall place property corner markers and a monument on the property showing site elevations, coordinate grid systems and WGS 84 latitude longitude. This survey shall meet the requirements of World Geodetic System 1984 (WGS 84 UTM Zone in decimal degrees[Kandahar Air Field 41R QQ}. The survey design shall include topographic map and the locations of all building corners, structures, major trees, road right of ways, names of roads, widths of roads, easements, right of ways, setbacks, parking and paving areas, storage containers, stoops, sidewalks and walkways, above ground utilities, electrical and Bunker locations. The contractor shall identify and show perimeter security walls, fences, hesco barriers, guard

towers and entry control point structures. The contractor shall locate the facilities in general agreement with the drawings included and any requirements in the Scope of Work, section 01010. All site features shall be clearly defined and dimensioned on the site plan. Buildings shall be located to provide access for emergency vehicles and fire fighting. Roads and parking areas shall be designed for turning radius of the largest vehicle entering the compound. The site plan shall show geometric design of the site, including applicable dimensions of all exterior facilities, mechanical equipment, pavements, utilities, etc. Required facilities are described in the following sections of this specification. All roads and areas where tractor-trailer vehicles will travel shall be designed for the worst case turning radius. Design and construction of roads and pavements shall be based on recommendations from geotechnical investigation required herein.

All site plans and master plans shall be drawn in the following projection and datum for incorporation into the U.S. Army Corps of Engineers GIS system:

WGS 1984 UTM Zone

Note: for this project, given the sensitive nature of Kandahar Air Field, the contractor is not afforded a base map showing the locations of the three sites. The local site maps for each project is shown in Appendix A.

2.3.2 Demolition

Demolition shall include removal of all structures, foundations, pavements, and utilities, and clear and grubbing. All refuse and debris shall be disposed of off site. Scrap metal shall be the property of the Host Government. The scrap metal on site shall be moved to an area away from the site perimeter as directed by the Contracting Officer's Representative and left for the Host Government to remove and/or salvage.

Demolished fencing and concertina wire shall be neatly rolled up for reuse by the government and as directed by the Contracting Officer. Likewise, used fence posts and outriggers shall be neatly stockpiled for reuse by the host government.

2.3.3 Site Grading & Drainage

The contractor will provide all necessary grading to insure adequate drainage so that no areas will be flooded due to a rainfall of a 10-year frequency. Drainage of the area should be compatible with the existing terrain. Building ground floor finished elevation shall be a minimum 150mm above adjacent grade and outside grade shall slope away from the building on all sides at a minimum slope of 5% for a distance of 3 meters. Holes and depressions shall be backfilled. Fill materials shall be composed of satisfactory soils or aggregates defined in ASTM D 2487 as GW, GP, GM, SP, SM, SC, SW, CL-ML. Minimum soil compaction shall be 95 percent of maximum density as defined in ASTM D 1557.

2.3.4 Paving

2.3.4.1 Roads

For some project site areas as noted in specifications 01010, paved roads are required. All pre-existing conditions are undeveloped land with gentle slopes, without substantial vegetation and with natural drainage channels of moderate size and spacing that are dry most of the time. All roads shall be of wearing surface 7.3 meters (24 feet) wide, unless otherwise noted, graded for proper drainage, provided with necessary drainage structures and completed with prescribed surfaces in accordance with applicable sections of TM 5-822-2 and TM 5-822-5 standards. The compound (cantonment area) roads sections shall have 250 mm (10 inch) compacted base course minimum and shall be surfaced with minimum 75 mm (3 inch) hot mix asphalt concrete, unless otherwise noted. Contractor shall notify the Contracting Officer immediately if initial site survey determines that area hydrology requires major drainage structures or bridges. Also, the Contracting Officer shall be immediately notified if the required

lengths of road or preexisting conditions are determined to be substantially or materially different than the above-described conditions/estimates.

Aggregate roads with PCC curbs are required within all 3 project sites. All roads shall be of wearing surface 7.3 meters (24 feet) wide, minimum 250 mm course thickness, unless otherwise noted, graded for proper drainage, provided with necessary drainage structures and completed with prescribed surfaces in accordance with applicable sections of TM 5-822-2 and TM 5-822-5 standards contractor shall notify the Contracting Officer immediately if initial site survey determines that area hydrology requires major drainage structures or bridges.

2.3.4.2 Bridges and Site Grading Plan

Preliminary investigation indicates no need for bridges or major drainage structures. The Contractor shall notify the Contracting Officer immediately if initial site survey determines that area hydrology requires major drainage structures or bridges. The contractor shall design a site grading plan that provides positive drainage and minimizes the requirement for major structures in a cost effective manner.

2.3.4.3 Parking Areas and Warehouse Staging Area

Contractor shall construct parking and storage areas using aggregate surface. Subgrade shall be scarified and compacted to 95% proctor density. Aggregate base shall be 150mm (6 inches) for parking areas, and 250mm (10 inches) for motor pools. Aggregate Base Course (ABC) material must be well graded, durable aggregate uniformly moistened and mechanically stabilized by compaction. Degree of compaction shall be expressed as a percentage of the maximum density obtained by the test procedure presented in ASTM D 1557or equivalent DIN, BS, or EN standards.

2.4 FORCE PROTECTION DESIGN

The Contractor shall design and construct force protection measures for each project site. The Force Protection design shall incorporate minimum setbacks for new facilities to maximum extent possible as permitted by size of the site and the requirements of the user. Force protection design shall be in accordance with Joint Security Directorate Antiterrorism/Force Protection Guide, March 2002. Force Protection design shall also meet the requirements of UFC 4-010-01, Design: Minimum DoD Antiterrorism Standards for Buildings, 8 Oct 2003 and UFC 4-010-02, DoD Minimum Antiterrorism Standoff Distances for Buildings, 8 Oct 2003 and Joint Security Directorate Antiterrorism/Force Protection Guide, March 2002.

The RSOI and Class I Warehouse projects are located within Kandahar Air Field proper and do not require extensive force protection requirements. The Entry Control Point is located on the perimeter of Kandahar Air Field and has extensive force protection requirements.

2.4.1 Project Site Security Features

2.4.1.1 Fence Access Requirements (for ECP and Class I Warehouse projects)

2.4.1.1.1 Swinging Gates

Gates shall be swing type and be constructed of steel and be a pair of 3.65 m wide x 2.4 m high steel leaves, constructed of 6mm steel plate skins, steel tube frame, and steel tube intermediate posts and rails. Gate design shall insure it is dimensionally stable, square, true and planar. Gate leaves shall not rack, shake or deflect during operation and the hinges are to be designed and constructed to support the entire weight of each leaf. Gates shall have a sufficient number of hinges to support each gate leaf. Provide a locking mechanism that holds the gates together when in the closed position as well as a drop bolt that engages a steel sleeve embedded in the pavement.

2.4.1.1.2 Sliding Gates (if used)

Gates shall be K4 sliding type. Gate shall be a minimum 3 M tall, with 0.5 M of high tension razor wire mounted on top. Gate shall be constructed of 100 mm x 100 mm x 5 mm square steel tubing, faced with 5mm steel plate. The design and construction of the gates shall insure that it is dimensionally stable, square, true and planar. Sliding Gate shall not rack or deflect when open, closed, or in motion. Gate tracks shall be anchor mounted to galvanized steel stanchions. Provide a locking mechanism that holds the gate closed. Provide reinforced grade beam across gateway flush with pavement to lock gate with flush mounted vertical sliding bolts, bolts shall be 50 mm dia solid steel. The sliding gate will also have a built- in personnel gate with its own locking mechanism.

2.4.1.2 Outriggers

Outrigger supporting arms shall be "Y" shaped with post secured onto the top of the fence. Posts shall conform to ASTM F 1083, Pipe, Steel, Hot Dipped Zinc Coated (Galvanized) Welded.

2.4.1.3 Reinforced Barbed Tape

Reinforced barbed tape shall be 600 mm diameter concertina style coil consisting of 31 loops. Each loop shall consist of 19 barb clusters per loop. Adjacent coils loops shall be alternately clipped together at three points about the circumference to produce the concertina effect upon deployment. Spacing between attachments points when deployed shall be 400 mm. The reinforced barbed tape shall be fabricated from 430 series stainless steel with hardness range of Rockwell (30N) 37-45 conforming to the requirements of ASTM A 176. Each barb shall be a minimum of 30.5 mm (1.2 inch) in length, in groups of 4, spaced on 100 mm (4 inch) centers. The stainless steel core wire shall have a 2.5 mm (0.098 inch) diameter with a minimum tensile strength of 895 MPa. Sixteen gauge stainless steel twistable wire ties shall be used for attaching the barbed tape to the barbed wire. The reinforced barbed tape shall be equivalent to NSN: 5660-01-457-9852.

2.4.1.4 Chain-Link Fence and Gates

Provide chain-link fence and gates as noted and gate fabric shall be No. 9 gage wires woven into a 50 mm diamond mesh. Fabric shall be coated with 366 grams per square meter zinc galvanizing. Posts shall be ASTM F 1083 Pipe, Steel, Hot Dipped Zinc Coated (Galvanized) Welded or equal. Top of fence and gates shall be provided with outriggers and reinforced barbed tape as indicated above. Post sizes shall be as shown on drawings.

The gates shall be swing type. Hinged gates shall be a pair of 3.65 m wide x 2.4 m high leafs, constructed of a steel tube frame and steel tube intermediate posts and rails. The design of the gates shall insure that it is dimensionally stable, square, true and planar. Gate leafs shall not rack or deflect when install on its hinges. Gates shall have a sufficient number of hinges, anchor mounted to the exterior masonry walls, to support each gate leaf. Provide a locking mechanism that holds the gates together when in the closed position as well as a drop bolt that engages a steel sleeve embedded in the pavement.

2.4.1.5 Sniper Screen (if directed by the contracting officer)

Sniper screen material will be ultraviolet light resistant and guaranteed against sunlight degradation for five years. Material will allow wind to blow through, without stretching the material, or distorting the frame. Sniper screen material will be fastened to standard galvanized fencing (see above) mounted to a rigid frame. The frame shall be securely embedded into the top of the wall. Frame components shall conform to ASTM F 1083, Steel Pipe, Hot Dipped Zinc Coated (Galvanized Welded.

2.4.2 Entry Control Point (ECP), Primary

The scope of work for the ECP project was described in specifications section 01010. The following information is provided as technical guidance to the scope of work.

2.4.2.1 Vehicle Barriers

2.4.2.1.1 Active Barriers - Drop Arm Gates

The height of the beam shall be a minimum of 30 inches above finished grade. The crash beam must be capable of blocking a minimum road width of 4.0 meters. The crash beam shall be manually raised and lowered with less than 30 pounds of force. The end of the crash beam should include a locking pin with padlock acceptance for securing the beam when it is in the down position capable of stopping large (10,000 lb.) trucks, in addition to heavy duty steel gates into the compound.

2.4.2.1.2 Active Barriers – Tire Shredder

Additional active barriers shall be tire shredder type with manual latch down capability. Shredders shall extend the entire width of the roadway opening where installed. At minimum provide one shredder at rejection lane entrance to prevent unauthorized gate access.

2.4.2.1.3 Active Barriers – Cable Lift Barrier

A Cable Lift Gate will be provided in addition to the sliding gate. Cable lift gate will normally be in the raised (deployed) position. Cable lift gate shall be certified to stop a 6,800 KG truck travelling 80 KPH. Shall be able to balanced by counterweights so it can be manually raise or lowered by one man in seconds. Deployed height will be at least 1 M. Cables shall be a minimum of 25mm diameter braided steel.

2.4.2.1.4 Active Barriers – Pop Up Barrier

Barrier shall deploy in 10 seconds and be certified to stop a 6,800 KG truck travelling 80 KPH.

2.4.2.1.4 Passive Barriers - Concrete

Barriers shall be both Texas and Alaska size barriers, similar in size and dimensions that are currently in use at Kandahar Air Field. The general locations of concrete barriers were shown on the site plans in Appendix A, the specific types in use (either Alaska or Texas) and locations will be directed by the Contracting Officer.

2.4.3 Loudspeakers and Alarm System

Install Loud Speaker & Alarm System that can alert the entire compound via panic button from any tower or guard post station. Speaker & Alarm System shall be exterior grade components to withstand severe weather conditions of cold, heat, rain, sleet, and dust storms and to be completely understandable during these conditions from any point within the compound. All wires shall be installed in conduits.

2.5 CIVIL UTILITIES

2.5.1 General

The design of the water and sanitary systems shall be sized to provide flow and discharge based on a fixture unit basis. The design drawings shall show all utility lines, line sizes, valves, manholes, cleanouts, disinfection systems, and applicable details associated with water and sanitary system designs. Specifications covering water lines, valves, pumps, controls, sanitary sewers and storm sewers shall be submitted as part of the design and shall require standard materials that are available in-country. Contractor shall install and connect exterior sanitary sewer collection and water supply piping to service connection points of each facility requiring such. Water and sanitary sewer systems do not currently

exist for any of the proposed facilities. The contractor will be required to provide temporary potable water tanks as well as temporary sanitary sewer holding tanks for the ECP and Class I Yard. Water tanks shall be capable of holding a minimum of the Average Daily Demand (ADD) or as directed in the Section 1010 Scope of Work facility descriptions. Sanitary sewer holding tanks shall at a minimum be capable of holding 80% of the ADD.

2.5.2 Water

2.5.2.1 General

Infrastructure design and construction shall serve the demand. The Contractor shall install water distribution mains, branches, laterals, lines and service connections to include all pipe, valves, fittings and appurtenances. Exterior water line construction shall include service to all buildings as described in the Scope of Work Section 01010. The required Average Daily Demand (ADD) approximation is derived from 190 liters per capita per day (lpcd) or 50 gallons per capita per day (gpcd). In the event potable or non-potable use water is required prior to completion of the water facilities infrastructure the Contractor may be issued a Request for Proposal to provide non-potable (tank truck) and potable (bottled or other reliable source) consumption. Provide a minimum of one (1) outside hose spigot for any building or facility for which a water supply is provided for landscaping purposes. Water supply system does not currently exist for the proposed facilities. Temporary water tanks will be required to support the ECP and Class I facilities. The contractor shall construct water supply connection points for connection to the future air field infrastructure.

2.5.2.2 Raw Water Disinfection

Contractor shall perform disinfection of the well water in accordance with AWWA A 100 or equivalent. Bacteriological samples shall be collected and examined in accordance with Standard Methods for the Examination of Water and Wastewater by a qualified lab as approved by the Contracting Officer.

2.5.2.3 Service Booster Pumps

Contractor shall provide a booster pump station with end suction or split case double suction horizontal split case (frame mounted) centrifugal pumps arranged in parallel for pumping water storage into the main distribution system. The pumps and controls shall be designed to supply and maintain acceptable system pressure throughout the distribution network given the full range of flow conditions (low flow to peak). For conditions of low demand and to prevent short cycling of primary pumps, provide a low demand jockey pump with capacity of one-third (1/3) of the Average Daily Demand (ADD). Each booster pump, two (2), shall be capable of delivering 2 times (2x) the ADD. Provide suitable expansion tank. The suction side of the service booster pumps shall have an eccentric reducer and gate valve installed. The discharge side shall have a gate valve, check valve between the pump and the gate valve and concentric reducer, pressure gage and air relief valve.

2.5.2.4 Water Storage Tank

Contractor shall provide a circular steel or circular concrete ground storage reservoir (GST) to be located on the ground surface. Blivets may be used as temporary water holding facilities. Volume of the GST shall be a minimum storage volume of a full days demand. The Contractor shall verify storage volume requirements based on final design population. The storage facility shall be located above drainage areas and locations subject to flooding as approved by the Contracting Officer. The storage facility shall be located on the higher elevations of the site to promote gravity flow and reduce pumping requirements. Overflow and air vents shall be screened so that birds, rodents and debris cannot enter the reservoir.

2.5.2.5 Disinfection & Chlorination System

Use hypochlorite compounds for disinfection. A hypo-chlorinator shall be used to feed a sodium hypochlorite solution of 5-15% available chlorine into the system. Hypochlorite compound may be a liquid or solid form. The hypo chlorination system shall consist of a chemical solution tank for hypochlorite, diaphragm-type pump, power supply, water pump, pressure switch and storage tank (optional hydro-pneumatic/storage). The pump shall feed a hypochlorite solution in proportion to the water demand. The hypo-chlorinator shall have a pumping rate, liters per day (lpd) (gallons per day (gpd)) adequate to deliver 5 percent (%) available hypochlorite solution adjustable to the quantity of water being produced from the source. Dosage rate will vary somewhat depending on actual pump production rate and available residual chlorine in the system. Contractor shall determine the required dosage rate milligrams per liter (mg/l) to maintain the required chlorine residual (usually 0.2-0.4mg/l) in the distribution system. Chlorine solution tank shall be large enough to hold a three days supply of hypochlorite solution. A fresh solution shall be prepared every two or three days because the solution may lose its strength over time and this will affect the actual chlorine feed rate. The hypochlorite shall be stored in a cool dry place. Sodium hypochlorite can lose from two to four percent of its available chlorine content per month at room temperature. Contractor shall verify required minimum residual chlorine in accordance with local requirements verified and approved by the Contracting Officer. The chlorination system shall have the capability for manually adjusting the dosage rate and be installed in such a manner that the system can be easily disconnected and bypassed in the event of health safety or routine maintenance and repair. Disinfection of water mains shall be in accordance with AWWA standard C651-86 and disinfection of storage facilities in accordance with AWWA standard C652-86

2.5.2.6 Chlorine Shelter

Contractor shall furnish a shelter as per chlorine manufacturer's installation requirements. The Contractor shall provide manufacturers catalog information and shop drawing to the Contracting Officer for approval.

2.5.3 Water Distribution System

2.5.3.1 General

The Contractor shall provide a water distribution system described as follows: Pipe diameters used in the network shall be 300mm (12 inch), 250mm (10 inch), 200mm (8 inch), 150mm (6 inch) and 100mm (4 inch), as calculated, using ductile iron (DI) conforming to AWWA C151, installed in accordance with C 600 or polyvinyl chloride (PVC) as per ASTM D 1784 and 1785. All pipes and joints shall be capable of at least 1.03 MPa (150 psi) and 1.38 MPa (200psi) hydrostatic test pressure unless otherwise specified. Pipes should be adequate to carry the maximum quantity of water at acceptable velocities 0.9 to 1.5m/sec (3 to 5 ft/sec) at maximum flows not to exceed 2.8m/sec (9.2ft/sec). **Minimum pressure shall be 276kPa (40psi) to** all points of the distribution system and **maximum pressure shall be 517kPa (75psi)**. If high pressures (greater than 690kPa) cannot be avoided, pressure-reducing valves shall be used. Water service connections to buildings shall vary from 19mm, 25mm or 38mm to 75mm, as calculated, depending on the usage requirement. Pipe service connections from the distribution main to the building shall be either Polyvinyl Chloride (PVC) plastic Schedule 80 ASTM D 1785 or copper tubing conforming to ASTM B 88M, Type K, annealed. After choosing piping material type, use similar piping materials for all buildings for efficiency of future maintenance activities. The distribution network shall be laid out in a combination grid and looped pattern with dead ends not exceeding 30m (99 feet). Dead end sections shall not be less than 150mm (6 inch) diameter and shall either have blow off valves or fire hydrants (flushing valves) installed for periodic flushing of the line. Any pipe with a fire hydrant on the line shall be at least 150mm (6 inch) in diameter. Water supply distribution shall connect to a building service at a point approximately 1.5m (5 feet) outside the building or structure to which the service is required. Adequate cover must be provided for frost protection. A minimum cover of 800mm (2'-8") is required to protect the water distribution system against freezing. Water lines less than 1.25 meters (4 feet) deep under road crossings shall have a reinforced concrete cover of at least 150 mm (6 inch)

thickness around the pipe extending out to 1m from each road edge.

2.5.3.2 Pipe

The Contractor shall provide pipe of adequate strength, durability and be corrosion resistant with no adverse effect on water quality. The exterior surface of the pipe must be corrosion resistant. If the pipe is installed underground pipe shall be encased with polyethylene in accordance with AWWA C105. Water distribution pipe material shall be PVC or Ductile Iron (DI). Ductile iron pipe shall conform to AWWA C104, etal. DI fittings shall be suitable for 1.03MPa (150psi) pressure unless otherwise specified. Fittings for mechanical joint pipe shall conform to AWWA C110. Fittings for use with push-on joint pipe shall conform to AWWA C110 and C111. Fittings and specials shall be cement mortar lined (standard thickness) in accordance with C104. Polyvinyl Chloride (PVC) pipe shall conform to ASTM D 1785. Plastic pipe coupling and fittings shall be manufactured of material conforming to ASTM D 1784, Class 12454B. PVC screw joint shall be in accordance with ASTM D 1785, etal, Schedules 40, 80 and 120. PVC pipe couplings and fittings shall be manufactured of material conforming to ASTM D 1784, Class 12454B. Pipe less than 80mm (3 inch), screw joint, shall conform to dimensional requirements of ASTM D schedule 80. Elastomeric gasket-joint, shall conform to dimensional requirements of ASTM D 1785 Schedule 40, All pipe and joints shall be capable of 1.03 MPa (150psi) working pressure and 1.38 MPa (200psi) hydrostatic test pressure.

2.5.3.3 Hydrostatic, Leakage and Disinfection tests

The Contracting Officer will be notified not less than 48 hours in advance of any water piping test and will be given full access for monitoring testing procedures and results. Where any section of water line is provided with concrete thrust blocking for fittings or hydrants, tests shall not be made until at least 5 days after installation of concrete thrust blocking, unless otherwise approved.

2.5.3.4 Pressure Test

After the pipe is laid, the joints completed, and the trench partially backfilled leaving the joints exposed for examination, the newly laid piping or any valved section of piping shall, unless otherwise specified, be subjected for 1 hour to a hydrostatic pressure test of 1.38 MPa (200 psi). Each valve shall be opened and closed several times during the test. Exposed pipe, joints, fittings, hydrants and valves shall be carefully examined during the partially opened trench test. Joints showing visible leakage shall be replaced or remade as necessary. Cracked or defective pipe, joints, fittings, hydrants and valves discovered following this pressure test shall be removed and replaced and retested until the test results are satisfactory.

2.5.3.5 Leakage Test

Leakage tests shall be conducted after all pressure tests have been satisfactorily completed. The duration of each leakage test shall be at least 2 hours, and, during the test, water lines shall be subjected to not less than 1.38 MPa (200 psi). Leakage is defined as the quantity of water to be supplied into the newly laid pipe, or any valved or approved section, necessary to maintain pressure to within 34.5kPa (5 psi) of the specified leakage test pressure after the pipe has been filled with water and all air expelled. Pipe installation will not be accepted if leakage exceeds the allowable leakage, as determined by the following formula:

L = 0.0001351ND (P raised to 0.5 power), where
L = Allowable leakage in gallons per hour
N = Number of joints in the length of pipeline tested
D = Nominal diameter of the pipe in inches
P = Average test pressure during the leakage test, in psi gauge

Should any test of pipe disclose leakage greater than that calculated by the above formula, the defective

joints shall be located and repaired until the leakage is within the specified allowance, without additional cost to the government.

2.5.3.6 Bacteriological Disinfection

2.5.3.6.1 Disinfection Procedure

Before acceptance of potable water operation, each unit of completed waterline shall be disinfected as prescribed by AWWA C651. After pressure tests have been completed, the unit to be disinfected shall be thoroughly flushed with water until all entrained dirt and mud have been removed before introducing the chlorinating material. Flushing will be performed in a manner and sequence that will prevent recontamination of pipe that has previously been disinfected. The chlorinating material shall be liquid chlorine, calcium hypochlorite, or sodium hypochlorite. The chlorinating material shall provide a dosage of not less than 50 ppm and shall be introduced into the water lines in an approved manner. Polyvinyl Chloride (PVC) pipelines shall be chlorinated using only the above-specified chlorinating material in solution. The agent shall not be introduced into the line in a dry solid state. The treated water shall be retained in the pipe long enough to destroy all non-spore forming bacteria. Except where a shorter period is approved, the retention time shall be at least 24 hours and shall produce not less than 25 ppm of free chlorine residual throughout the line at the end of the retention period. Valves on the lines being disinfected shall be opened and closed several times during the contact period. The line shall then be flushed with clean water until the residual chlorine is reduced to less than 1.0 ppm. During the flushing period, each fire hydrant on the line shall be opened and closed several times.

2.5.3.6.2 Sampling

For each building connected to the water system, personnel from the Contractor's commercial laboratory shall take at least 3 water samples from different points, approved by the Contracting Officer, in proper sterilized containers and perform a bacterial examination in accordance with approved methods. The commercial laboratory shall be verified to be qualified by the appropriate authority for examination of potable water.

2.5.3.6.3 Acceptance Requirements

The disinfection shall be repeated until tests indicate the absence of pollution for at least 2 full days. The unit will not be accepted until satisfactory bacteriological results have been obtained.

2.5.3.6.4 Time for making Tests

Except for joint material setting or where concrete thrust blocks necessitate a 5-day delay, pipeline jointed with rubber gaskets, mechanical or push-on joints, or couplings may be subjected to hydrostatic pressure, inspected, and tested for leakage at any time after partial completion of backfill.

2.5.3.6.5 Concurrent Tests

The Contractor may elect to conduct the hydrostatic tests using either or both of the following procedures. Regardless of the sequence of tests employed, the results of pressure tests, leakage tests, and disinfection shall be recorded for submission and approval. Replacement, repair or retesting required shall be accomplished by the Contractor at no additional cost to the Government. Pressure and leakage testing may be conducted concurrently, Hydrostatic tests and disinfection may be conducted concurrently, using water treated for disinfection to accomplish the hydrostatic tests. If water is lost when treated for disinfection and air is admitted to the unit being tested, or if any repair procedure results in contamination of the unit, disinfection shall be re-accomplished.

2.5.3.7 Valves

Valves (Gate valves w/box) shall be placed at all pipe network tees and cross intersections, and the number of valves shall be one less than the number of lines leading into and away from the intersection. For isolation purposes valves shall be spaced not to exceed 3600 mm (12 feet). Gate valves shall be in accordance with AWWA C 500 and/or C509. Butterfly valves (rubber seated) shall be in accordance with C504 etal. The valves and valve boxes shall be constructed to allow a normal valve key to be readily used to open or close the valve. Provide traffic-rated valve boxes. Provide concrete pad, 1 meter (3'-4") square, for all valve boxes.

2.5.3.7.1 Vacuum and Air Release Valves

Air release valves are required to evacuate air from the main high points in the line when it is filled with water, and to allow the discharge of air accumulated under pressure. Vacuum relief valves are needed to permit air to enter a line when it is being emptied of water or subjected to vacuum. Contractor shall submit manufacturer's data for properly sized combination air and vacuum release valves and determine their locations on the distribution system subject to review and approval of the Contracting Officer.

2.5.3.7.2 Blow-Off Valves

The Contractor shall provide 40-50mm (1-5/8" – 2") blow-off valves at ends of dead end mains. Valves should be installed at low points in the mains where the flushing water can be readily discharged to natural or manmade drainage ditches, swales or other.

2.5.3.8 Thrust Blocking

Contractor shall provide concrete thrust blocking at any point where the layout of the system changes the direction of the flow, increases the velocity, or decreases or stops the flow. At these points, the pipes and fittings must be anchored and kept from moving or pulling apart by the use of thrust blocks installed against undisturbed earth.

2.5.4 Sanitary Sewer

2.5.4.1 General

There are no functional or salvageable sanitary sewer collection, treatment or disposal facilities at this site. The contractor shall provide temporary sanitary sewer holding facilities to meet the expected one (1) days average daily sanitary sewer flow for the ECP and Class I Yard. The contractor shall provide sanitary sewer connection points for connection to the future air field infrastructure project. The Contractor shall obtain topographic information or other maps that show vegetation, drainage channels and other land surface features such as underground utilities and related structures that may influence the design and layout of the collection system. If maps are not available, or do not provide satisfactory information or sufficient detail of the site, field surveys shall be performed. Sanitary sewers less than 1.25 meters (4 feet) under road crossings shall have reinforced concrete cover at least 150 mm (6 inch) thick around the pipe. Concrete cover will extend out to at least 1 m from each road edge.

Exterior sanitary sewer line construction shall include service to all buildings as described in the Scope of Work Section 01010. Contractor shall design sanitary sewer collection system using approved field survey data and finished floor elevations. Depending upon the topography and building location, the most practical location of sanitary sewer lines is along one side of the street. In other cases they may be located behind buildings midway between streets. Main collection sewers will follow the most feasible route to the point of discharge. The sewer collection system shall be designed to accommodate the initial occupancy and a reasonable expansion capability. All sewers shall be located outside of the roadways as much as practical, and minimize the number of roadway crossings. To the extent practical, a sewer from one building shall not be constructed under another building, or remain in service where a building is subsequently constructed over it. Construction required shall include appurtenant structures

and building sewers to points of connection with building drains 1.5m (5 feet) outside the building to which the sewer collection system is to be connected.

The Contractor shall use the following criteria where possible to provide a layout which is practical, economical and meets hydraulic requirements:

a. Follow slopes of natural topography for gravity sewers.
b. Check subsurface investigations for groundwater levels and types of subsoil encountered. If possible, avoid areas of high groundwater and the placement of sewers below the groundwater table.
c. Avoid routing sewers through areas which require extensive restoration or underground demolition
d. Depending upon the topography and building locates, the most practical location of sanitary sewer lines is along one side of the street. In other cases they may be located behind buildings midway between streets. The intent is to provide future access to the lines for maintenance without impacting vehicular traffic.
e. Avoid placing manholes in low-lying areas where they could be submerged by surface water or subject to surface water inflow. In addition, all manholes shall be constructed 50 mm higher than the finished grade, with the ground sloped away from each manhole for drainage.
f. Sewer lines shall have a minimum of 800 mm of cover for frost protection.
g. Locate manholes at change in direction, pipe size, or slope of gravity sewers.
h. Sewer sections between manholes shall be straight. The use of a curved alignment shall not be permitted.
i. If required by the design, locate manholes at intersections of streets where possible. This minimizes vehicular traffic disruptions if maintenance is required.
j. Sewer lines less than 1.25 meters deep under road crossings shall have a reinforced concrete cover of at least 150mm thickness around the pipe or shall utilize a steel or ductile iron carrier pipe. It is recommended to continue the reinforced concrete cover or carrier pipe a minimum of one (1) meter beyond the designated roadway.
k. Verify that final routing selected is the most cost effective alternative that meets service requirements.

2.5.4.2 Protection of Water Supplies

The Contractor shall ensure that the sewer design meets the following criteria:

a. Sanitary sewers shall be located no closer than 15m (50 feet) horizontally to water wells or reservoirs to be used for potable water supply.

b. Sanitary sewers shall be no closer than 3 m (10 feet) horizontally to potable water lines; where the bottom of the water pipe will be at least 300mm (12 inches) above the top of the sanitary sewer, horizontal spacing shall be a minimum of 1.8m (6 feet).

c. Sanitary sewers crossing above potable water lines shall be constructed of suitable pressure pipe or fully encased in concrete for a distance of 2.7m (9 feet) on each side of the crossing. Pressure pipe will be as required for force mains in accordance with local standards and shall have no joint closer than 1m (3 ft) horizontally to the crossing, unless the joint is fully encased in concrete.

2.5.4.3 Quantity of Wastewater

The Contractor shall verify the average daily flow considering both resident (full occupancy) and non-resident (8hr per day) population. The average daily flow will represent the total waste volume generated over a 24-hour period, and shall be based on the total population of the facility and usage rate of 50 gallons (190 liters) per capita day (water usage). The wastewater flow rate shall be calculated as approximately 80% of water usage rate, or 41 gallons per capita day. Design criteria guideline shall be based on average influent wastewater characteristics as BOD of 250mg/l, SS of 250mg/l, BOD load of

750ppd, and SS load of 750ppd.

2.5.4.4 Gravity Sewer

Sanitary sewers shall be designed to flow at a maximum in the following way: Trunk Sewers - 90 percent full; Laterals and Mains – 80 percent full, Building connections (service) – 70 percent full. Sanitary sewer velocities shall be designed to provide a minimum velocity of 0.6 meters per second (mps) or 2.0 feet per second (fps) at the ADD flow rate and a minimum velocity of 0.8 to 1.05 mps (2.5-3.5fps) at the peak diurnal flow rate. In no case shall the velocity drop below 0.3 mps, (1.0 fps) to prevent settlement of organic solids suspended in the wastewater. Pipe slopes shall be sufficient to provide the required minimum velocities and depths of cover on the pipe. Unless otherwise indicated (see Building Connections and Service Lines), gravity sewer pipe shall be installed in straight and true runs in between manholes with constant slope and direction. Adequate cover must be provided for frost protection. A minimum cover of 800 mm (2'-8") will be required to protect the sewer against freezing.

Table 1. Minimum Slopes for Sewers.

Sewer Size	Minimum Slope in Meters per 100 Meters
100 mm	1.00
150 mm	0.62
200 mm	0.40
250 mm	0.28
300 mm	0.22
350 mm	0.17
375 mm	0.15
400 mm	0.14
450 mm	0.12
525 mm	0.10
600 mm	0.08

2.5.4.5 Manholes

The Contractor shall provide standard depth manholes (MH), (depth may vary) an inside dimension of 1.2m (4 ft). Manholes shall be made of cast-in-place reinforced concrete with reinforced concrete cover. Alternate pre-cast manhole option shall taper to a 750 mm (30-inch) cast iron frame that provides a minimum clear opening of 600 mm (24 inches). In every case, the manholes, frames and covers shall be traffic rated, H-20 load rating. All manholes shall be provided with a concrete bench with a flow line trough, smoothly formed to guide waste flow to the outlet pipe from the inlet pipe(s). The top surface of the bench shall be above the crown of all pipes within the manhole. All surfaces of the bench shall be sloped smoothly toward the trough to guide flow, even under peak flow conditions.

2.5.4.5.1 Manhole Design Requirements

Manholes are required at junctions of gravity sewers and at each change in pipe direction, size or slope, except as noted hereinafter for building connections.

2.5.4.5.2 Spacing

The distance between manholes must not exceed 120m (400 ft) in sewers of less than 460mm (18 in) in diameter. For sewers 460mm (18 in) and larger, and for outfalls from wastewater treatment facilities, a spacing of up to 180m (600 ft) is allowed provided the velocity is sufficient to prevent sedimentation of solids.

2.5.4.5.3 Pipe Connections

The crown of the outlet pipe from a manhole shall be on line with or below the crown of the inlet pipe.

2.5.4.5.4 Frames and Covers

Frames and covers shall be cast iron, ductile iron or reinforced concrete, traffic rated in any case to an H-20 load rating. Cast iron frames and covers shall be traffic rated, circular with vent holes.

2.5.4.5.5 Steps for Manholes

Steps shall be cast iron, polyethylene coated, at least 15mm (5/8 in) thick, not less than 400mm (16 in) in width, spaced 300mm (12 in) on center.

2.5.4.6 Pipe

Pipe shall conform to the respective specifications and other requirements as follows: Provide Polyvinyl Vinyl Chloride (PVC) conforming to ASTM D 3034, Type PSM with a maximum SDR of 35, size 380 mm (15inch) or less in diameter. PVC shall be certified as meeting the requirements of ASTM D 1784, cell Class 12454 B.

2.5.4.6.1 Fittings

Fittings shall be compatible with pipe supplied and shall have a strength not less than that of the pipe. Fittings shall conform to the respective specifications and requirements as follows: provide PVC fittings conforming to ASTM D 3034 for type PSM pipe.

2.5.4.6.2 Joints

Joints installation requirements shall comply with the manufacturers installation instructions. Flexible plastic pipe (PVC or high density polyethylene pipe) gasketed joints shall conform to ASTM D3212.

2.5.4.6.3 Branch Connections

Branch connections shall be made by use of regular fittings or solvent-cemented saddles as approved. Saddles for PVC pipe shall conform to Table 4 of ASTM D 3034.

2.5.4.6.4 The minimum depth of the cover over the pipe crown shall be be 0.8m (2 ft 8”).

2.5.4.6.5 Building Connections and Service Lines

Building connections and service lines will be planned to eliminate as many bends as practical and provide convenience in rodding. Bends greater than 45 degrees made with one fitting should be avoided; combinations of elbows such as 45-45 or 30-60 degrees should be used with a cleanout provided. Connections to other sewers will be made directly to the pipe with standard fittings rather than

through manholes. However, a manhole must be used if the connection is more than 31m from the building cleanout. Service connection lines will be a minimum of 150 mm (6 inch) diameter and laid at a minimum 1% grade, but up to 2% as design parameters dictate. Service laterals shall be 200 mm (8 inch) and sloped to maintain the minimum velocity as described in paragraph “Gravity Sewer.”

2.5.4.6.6 Cleanouts

Cleanouts must be installed on all sewer-building connections to provide a means for inserting cleaning rods into the underground pipe. Install manufactured wye fittings. In lieu of a wye fitting, an inspection chamber may be installed. The inspection chamber shall be of the same construction as a manhole. Preferably the cleanout will be of the same diameter as the building sewer, and never be smaller than 150mm (6 in). Cleanouts shall be located within 1m from the building.

2.5.4.6.7 Field Quality Control

2.5.4.6.7.1 Field Tests and Inspections

The Contracting Officer will conduct field inspections and witness field tests specified in this section. The Contractor shall perform field tests and provide labor, equipment and incidentals required for testing.

Check each straight run of pipeline for gross deficiencies by holding a light in a manhole; it shall show a practically a full circle of light through the pipeline when viewed from the adjoining end of the line. When pressure piping is used in a non-pressure line for non-pressure use, test this piping as specified for non-pressure pipe.

Test lines for leakage by either infiltration tests or exfiltration tests. Prior to testing for leakage, backfill trench up to at least lower half of the pipe. When necessary to prevent pipeline movement during testing, place additional backfill around pipe to prevent movement during testing, but leaving joints uncovered to permit inspection. When leakage or pressure drop exceeds the allowable amount specified, make satisfactory correction and retest pipeline section in the same manner. Correct visible leaks regardless of leakage test results.

Infiltration tests and ex-filtration tests: Perform these tests for sewer lines made of specified material, not only concrete, in accordance with ASTM C 969M, ASTM C 969. Make calculations in accordance with the Appendix to ASTM C 969M and ASTM 969.

Low-pressure air tests: Perform tests as follows:

(a) Concrete pipe: Test in accordance with ASTM C 924M, ASTM C 924. Allowable pressure drop shall be given in ASTM C 924M ASTM C 924. Make calculations in accordance with the Appendix to ASTM C 924M, ASTM C 924;

(b) Ductile-iron pipe: Test in accordance with the applicable requirements of ASTM C 924M, ASTM C 924. Allowable pressure drop shall be as given in ASTM C 924M, ASTM C 924. Make calculations in accordance with the Appendix to ASTM C 924M, ASTM C 924;

(c) PVC Plastic pipe: Test in accordance with applicable requirements of UBPPA UNI-B-6. Allowable pressure drop shall be as given in UBPPA UNI-B-6. Make calculations in accordance with the Appendix to UBPPA UNI-B-6.

2.5.4.6.8 Deflection Testing

Deflection testing will not be required however; field quality control shall ensure that all piping is installed

in accordance with deflection requirements established by the manufacturer.

2.5.6 Storm Sewer Systems

Oil/water separators shall be utilized for all drains from industrial sites. Separators shall be installed as close as possible from the drain location. Storm sewer system shall not be mixed with sanitary sewer system and shall be in accordance with UFC 3-230-17FA, Drainage in Areas Other than Airfields.

3.0 ARCHITECTURAL REQUIREMENTS

3.1 GENERAL

All material approved shall become standardized material to be used throughout the facilities under contract. Different sub-contractors shall not use different material or standards under the contract. Intent of the project is to use locally procured materials (unless specified otherwise) and labor to the maximum extent possible while satisfying seismic building code. Conflicts between criteria shall be brought to the attention of the Contracting Officer for resolution. In such instances, the Contractor shall furnish all available information with justification to the Contracting Officer.

3.2 DESIGN CRITERIA

The Codes, Standards, and Regulations listed herein shall be used in the construction of this project. The publications shall be the most recent editions. Standards other than those mentioned may be accepted provided they meet the minimum requirements and the contractor shall submit proof of equivalency to the Contracting Officer for approval.

IBC - International Building Code, 2006
NFPA 101 - Life Safety Code, 2006.

3.3 LIFE SAFETY/ FIRE PROTECTION/ HANDICAPPED ACCESSIBILITY

All facilities will be designed in accordance with recognized industry standards for life safety and building egress and will satisfy the requirements of NFPA 101, UFC 3-600-01, and The International building Code. Compliant manual and automatic fire alarm and notification systems, portable fire extinguishers, fire sprinkler systems, and exiting facilities shall all be included when and as required. The water supply and distribution system in South Park is being designed to supply sprinkler systems for most if not all buildings planned. However, if the water supply and distribution system cannot supply a sprinkler system demand in a particular building(s) where sprinklers are required, then a set-up of fire pump(s) and water tank(s) will need to be provided for that building(s). Any waivers to sprinkler system requirements will need to be specifically requested per building by the user and granted in writing by the appropriate authority. Until such written waivers are in-hand, all buildings shall be considered to be subject to any requirements for sprinkler systems as dictated by NFPA 101, Unified Facilities Criteria 3-600-01, and International Building Code. The RSOI barrack facilities and any storage warehouse over 5000 square feet will require sprinkler protection and the UFC 3-600-01 requirements for water supply must be met. In keeping with the intended function of these facilities, handicapped accessibility will not be incorporated into this project. Due to the war contingency requirement, it is assumed that only able-bodied military and civilian personnel will use the facilities listed herein.

3.4 ANTITERRORISM/ FORCE PROTECTION

Force protection/anti-terrorism measures for this location shall be followed and incorporated into this project in accordance with the referenced DoD Regulations. Information regarding force protection may be found herein and at the following link: www.tisp.org/files/pdf/dodstandards.pdf .

3.5 EXCAVATION

Trench excavation shall be made for concrete footings. Trenches shall be a minimum of .8 meter deep. Trenches deeper than 1.5 meters shall have protective shoring to protect workers or have the sides of the trench sloped back at a slope of 1.5:1. Care shall be taken when backfilling of foundation trenches to avoid damage to walls. Any excess dirt shall become the property of the Contractor and shall be removed from the site to a location approved by the Contracting Officer.

3.6 THERMAL PERFORMANCE OF EXTERNAL BUILDING ASSEMBLIES

External building assemblies shall meet the requirements of TI-800, Design Criteria, UFC 3-400-01 Design: Energy Conservation, and ASHRAE Standard 90.1, latest editions, but shall meet the following minimum requirements:

Assembly	Minimum Thermal Value
Exterior walls (above grade)	RSI 1.936 (R 13)
Ceilings/roof	RSI 3.345 (R 30)
Floor (over unheated space)	RSI 3.345 (R 19)
Exterior doors	RSI 0.25 (R 1.43)
Exterior windows/(glazing within doors)	RSI 0.308(R 1.75)
Skylights	RSI 0.18 (R 1.02)

RSI measured in m2-K/W, R measured in sqft-F-hr/BTU.

3.7 CONCRETE & MASONRY

3.7.1 Concrete

Place 150 mm (6”) of capillary water barrier below areas to receive a concrete slab on properly compacted soil free of organic material. Concrete flooring in wet areas shall slope to the floor drain and not allow for water to puddle. Concrete slabs in all areas shall not be placed prior to inspection and approval of piping and sub-surface by the Contracting Officer. Foundation trenches shall be level and free of loose material. Trenches shall be inspected and approved by the Contracting Officer prior to placing of any concrete foundations. See paragraph 5 for structural characteristics of concrete and reinforcing steel for foundations and slabs.

3.7.2 Insulated Concrete Sandwich Wall System (3-D Building System)

This system is not used on this project.

3.7.3 Masonry

Storage of masonry materials shall be in a dry place or materials shall be covered with a plastic protective layer. Cover open walls each day to keep them protected and dry. Concrete masonry units (CMU) for exterior walls shall be either 100 mm or 190 mm or 290 mm wide x 390 mm x 190 mm high as shown on drawings or described in section 01010. All cells shall be fully grouted and reinforced. They shall be installed in running bond level and plumb. Mortar joints shall be 10 mm on all sides between CMU. Joints shall be struck with a concave tool to provide a smooth recessed curved surface. Install only quality units. The surface shall be free of chips, cracks, or other imperfections that would detract from the overall appearance of the finished wall. Defective CMU or mortar shall be rejected.

3.8 METAL

3.8.1 Building Systems

3.8.1.1 Arch Span

Insulated Arch-Span metal roofing systems shall be supported by reinforced concrete stem walls

approximately 2.5 m in height. Stem walls shall be insulated and finished with gypsum board or plaster on the interior, and finished with stucco on the exterior. The floor slab shall be reinforced concrete with a minimum thickness of 150mm placed on a clean vapor barrier above a capillary water barrier of 150mm minimum thickness on properly compacted soil. Exterior walls shall be insulated with a minimum of R-13 insulation, and provide a minimum of R-30 insulation for the roof. The roof insulation system shall be spray applied and harden to a durable rigid surface, as per the arch span manufacturer's standards.

Ribbed steel roof panels shall be mechanically fabricated from prefinished steel coil and joined by machines and operators, all certified by the arch span building manufacturer. The contractor shall present certificates of manufacturer's training for machine operators, and certificates of authenticity for proprietary machines and equipment.

Only prefinished steel coil certified by the arch-span system manufacturer shall be used on this project. Fasteners for accessories shall be manufacturer's standard. All materials and Concealed fasteners for steel roof panels shall be zinc-coated steel, aluminum, corrosion resisting steel, or nylon capped steel. Fasteners for structural connections shall provide both tensile and shear strength of not less than 350 kg per fastener.

3.8.1.2 Pre-Engineered Metal Building Systems

Metal building systems shall comply with the requirements of the MBMA Low Rise Building Systems Manual-2002. Facilities designated as long-span, shall have no interior columns.

3.8.2 Trim

3.8.2.1 Metal Window Sills

Galvanized metal window sills, 1 mm (20-gage), shall be installed on the exterior of all windows. The metal window sills shall have a turn down of 50 mm over the exterior masonry and stucco. Metal sills shall extend from side to side of the masonry opening in a single piece. Extend the metal window sill a minimum of 20 mm under the bottom of the aluminum windows. Install masonry mortar as required for a smooth surface under the window sills. Sills shall slope a minimum of 6mm to the exterior and not allow water to puddle.

3.8.2.2 Metal Fascia & Soffit

No wood fascias and/or soffits are allowed. Use metal fascias and soffits throughout. Extend roof decking out over fascia a minimum of 20 mm. Provide a 40 mm drip flashing over edge of roof decking so that it extends past bottom of decking on all sides of the building. Provide continuous soffit venting of all overhangs at both bottom and top of roof slope.

3.9 CARPENTRY

The use of wood framing as indicated below is acceptable only where allowed by IBC 2003 and NFPA 101.

3.9.1 Wood Purlins

If Contractor chooses to utilize wood purlins, provide and install roof purlins of natural wood, locally available material 1 meter on center securely wedged between steel H structural joists. Tightly fit 30 mm boards over roof structure and nail into wood purlins. New roofing shall extend a minimum of 300 mm past the exterior surface of the wall.

3.9.2 Wood Battens

If Contractor chooses to utilize wood ceiling batten strips, wood ceiling batten strips, 20 mm x 60 mm, shall be nailed to the bottom of the wood purlins. Battens shall be spaced at 400 mm on center (or per UBC requirements if sheetrock is substituted for plaster). This is for the support of a plaster ceiling.

3.10 ROOFING AND WEATHERPROOFING

3.10.1 Sloped Roofs

On sloping roofs provide and install .70 mm (24 gauge) galvanized steel in either corrugated or standing seam design. 0.64 mm (22 gauge) for pre-denotation roof issues which should be augmented with sand bags in the ceiling below the metal roofing as directed by the Contracting Officer. Metal roofing shall be anchored to the steel "Z" purlins or wood deck sub-surface using exposed fasteners at 300 mm on center at all seams and at 600 mm on center in the panel field. Fasteners shall be placed at the top of the corrugation taking care not to dent panel. Roof sealant or adhesive shall be placed over each anchor head. Roofing system shall include all edge, ridge and penetration flashings necessary for a watertight installation and as described in this section. Roofing shall be galvanized mil finish. Panels shall be overlapped two corrugations side to side and be continuous sheets from ridge to eave. Provide continuous ridge vents on all gable roofs.

3.10.2 Low Slope Roofs

Provide and install 3 ply built up roofing over concrete deck. Contractor may propose to the Contracting Officer an alternate roofing system with justification for consideration and alternate pricing. Concrete roof deck shall slope 21mm per m.

3.10.2.1 Built-up Roofing System

A Insulated-Deck, Coal Tar, Glass-Fiber, Aggregate Roofing (ICGA-BUR): Provide built-up, aggregate-surfaced roof system with coal tar bitumen and glass-fiber ply felts (roof manufacturer's separation layers) for layup as indicated.

3.10.2.1.1 Primer: ASTM D 41primer as recommended by roofing manufacturer.

3.10.2.1.2 Coal Tar Bitumen: ASTM D 450, Type III, as an option to asphalt.

3.10.2.1.3 Bitumen Membrane which meets the following:

a. ASTM D312 or the equivalent EN 1849-1 for thickness and unit weight,
b. ASTM D312 or the equivalent EN-1426 for penetration,
c. ASTM D312 or the equivalent EN-1427 for softening point
d. ASTM D312 or the equivalent TS 11758-1 for flash point or heat stability
e. ASTM D4601 or the equivalent TS 11758-1 for width and area of roll
f. ASTM D4601 (moisture percentage) or the equivalent EN 1928 (water tightness)
g. ASTM D226 (pliability) or the equivalent EN 1109 (cold bending).

3.10.2.1.4 Glass Roofing Felt: ASTM D 2178, Type IV or VI, except felts for coal tar systems shall be impregnated with a bituminous resin coating which is compatible with coal tar bitumen.

3.10.2.1.5 Organic Felt Base: ASTM D 2626 for use with asphalt roofing system.

3.10.2.1.6 Organic Felt Base: ASTM D 226 for use with asphalt roofing system and ASTM D 227 for use with coal tar roofing system. Organic felts may be used for bitumen stops and edge envelopes.

3.10.2.1.7 Insulation: 5cm (2 inch) thick extruded polystyrene rigid thermal insulation boards, conforming DIN, EN 13164 BS, EN 13164, k=0.2 @ 75 degrees F mean temperature, 2.82 kg/sq cm (40

lbs/sq in) compressive strength, hydrophobic, Type VI.

3.10.2.2 Roof Membrane Installation

a. Prime surface of concrete deck with asphalt primer per manufacturers recommended application rate.

b. Cant Strips/Tapered-Edge Strips: Wood, not less than 89 mm (3-1/2 inches) high, 45-degree insulation cant strips at juncture of membrane with vertical surface. Provide tapered-edge strips at perimeter edges of roof that do not terminate at vertical surfaces.

c. Base Layer: Install one lapped course of base sheet. Attach first layer of roofing membrane material to substrates and elsewhere as indicated. Mop to non-nailable substrate with hot bitumen or apply with torch method per manufacturer's specifications

c. Second Layer: Install second layer of roofing membrane material over the first course staggering joints and seams in both directions by at least 300 mm. Mop top layer of membrane to base layer, or attach via torch method per manufacturer's specifications.

3.10.2.3 Insulation Installation

Comply with insulation manufacturer's instructions and recommendations for handling, installing, and bonding or anchoring insulation to substrate. Insulation boards shall be installed loose, without glue, in staggered manner. Attention should be paid not to leave separation along edges. Where overall insulation thickness is 50 mm (2 inches) or greater, install required thickness in two layers with joints of second layer offset from joints of first layer a minimum of 300 mm (12 inches) each direction. Trim surface of insulation where necessary at roof drains so completed surface is flush with drain ring. Polyester felt or geotextile shall be installed over insulation layers as a filter layer to prevent the passage of fines in gravel layer to lower strata.

3.10.2.4 Composition Flashing And Stripping

a. Install composition flashing at cant strips, at other sloping and vertical surfaces, at roof edges, and at penetrations through roof. Install composition flashing in accordance with membrane manufacturers specifications. Nail or provide other forms of mechanical anchorage of composition flashing to vertical surfaces as recommended by manufacturer of primary roofing materials.

b. Install composition stripping where metal flanges are set on roofing. Provide not less than two plies of woven glass-fiber fabric, each set in a continuous coating of roofing cement and extended onto the deck 100 mm to 150 mm (4 inches and 6 inches), respectively. Except where concealed by aggregate surfacing or elastic flashing, apply a heavy coating of roofing cement over composition stripping.

c. Roof Drains: Fill clamping ring base with a heavy coating of roofing cement. Set built up roofing membrane in to the clamping ring base and fix the drain top on it.

d. Allow for expansion of running metal flashing and edge trim that adjoins roofing. Do not seal or bond built-up roof membrane or composition flashing and stripping to metal flanges that are over 914 mm (3 feet) in length.

e. Counterflashings: Counterflashings, cap flashings, expansion joints and similar work to be coordinated with built-up roofing work, are specified in other sections of these specifications.

f. Roof Accessories: Miscellaneous sheet metal accessory items, including insulation vents and other devices and major items of roof accessories to be coordinated with built-up roofing work.

3.10.2.5 Gravel Layer

A gravel layer of 16 to 32 mm diameter stone will be laid in at least 5cm thick on top of the filter layer in non-trafficable flat roofs The gravel layer will be applied as soon as possible to prevent UV damage and/or wind damage to insulation and filter layers

3.10.3 Flashing & Sheet Metal

3.10.3.1 Materials

Any metal listed by ASTM, DIN, BS or EN standards. Manual for a particular item may be used, unless otherwise specified or indicated. Materials shall conform to the requirements specified below and to the thicknesses and configurations established in ASTM, DIN, BS or EN standards. Different items need not be of the same metal, except that if copper is selected for any exposed item, all exposed items shall be copper.

3.10.3.2 Steel Sheet, Zinc-Coated (Galvanized)

Zinc coated steel conforming to ASTM A 525, DIN BS or EN Standards.

3.10.3.3 Aluminum wall capping and expansion joint profiles.

Aluminum wall capping shall conform to ASTM B 209 M, DIN 18339, BS or EN Standards.

3.10.3.4 Roof Gutters
Roof gutters shall be installed as indicated. Roof gutters shall be rigidly attached to the building. Supports for roof gutters shall be spaced according to manufacturer's recommendations.

3.10.3.5 Downspouts

Downspouts shall be designed and fabricated on site. Unless otherwise specified or indicated, exposed edges shall be folded back to form a 13 mm (1/2 inch) hem on the concealed side, and bottom edges of exposed vertical surfaces shall be angled to form drips. Bituminous cement shall not be placed in contact with roofing membranes other than built-up roofing. Downspouts shall be rigidly attached to the building with supports a minimum of 1.5 M aparts.

3.10.3.6 Wall, Floor, Ceiling Expansion Joints In Plaster & Stucco

Expansion joints shall be provided as specified in ASTM, DIN 18339, BS or EN Standards.

3.10.3.7 Connections and Jointing

3.10.3.7.1 Soldering

Soldering shall apply to copper and stainless steel items. Edges of sheet metal shall be pre-tinned before soldering is begun. Soldering shall be done slowly with well heated soldering irons so as to thoroughly heat the seams and completely sweat the solder through the full width of the seam. Edges of stainless steel to be pre-tinned shall be treated with soldering acid flux. Soldering shall follow immediately after application of the flux. Upon completion of soldering, the acid flux residue shall be thoroughly cleaned from the sheet metal with a water solution of washing soda and rinsed with clean water.

3.10.3.7.2 Seaming

Flat-lock and soldered-lap seams shall finish not less than 25 mm. wide. Unsoldered plain-lap seams shall lap not less than 75 mm. unless otherwise specified. Flat seams shall be made in the direction of

the flow.

3.10.3.7.3 Cleats

A continuous cleat shall be provided where indicated or specified to secure loose edges of the sheet metalwork. Butt joints of cleats shall be spaced approximately 3 mm. apart. The cleat shall be fastened to supporting wood construction with nails evenly spaced not over 300 mm. on centers. Where the fastening is to be made to concrete or masonry, screws shall be used and shall be driven in expansion shields set in concrete or masonry.

3.10.3.8 Flashing

Flashing shall be installed at locations indicated and as specified below. Sealing shall be according to the flashing manufacturer's recommendations. Flashings shall be installed at intersections of roof with vertical surfaces and at projections through roof, except that flashing for heating and plumbing, including piping, roof and floor drains, and for electrical conduit projections through roof or walls are specified in other sections. Except as otherwise indicated, counter flashings shall be provided over base flashings. Perforations in flashings made by masonry anchors shall be installed on top of joint reinforcement. Lashing shall be formed to direct water to the outside of the system.

3.10.3.8.1 Through-wall Flashing

Through-wall flashing includes sill, lintel, and spandrel flashing. The flashing shall be laid with a layer of mortar above and below the flashing so that the total thickness of the two layers of the mortar and flashing are the same thickness as the regular mortar joints. Flashing shall not extend further in to the masonry backup wall than the first mortar joint. Joints in flashing shall be lapped and sealed. Flashing shall be one piece for lintels and sills.

3.10.3.8.2 Lintel Flashing

Lintel flashing shall extend the full length of lintel. Flashing shall extend through the wall one masonry course above the lintels and shall be bent down over the vertical leg of the outer steel lintel angle not less than 50 mm, or shall be applied over top of masonry and pre-cast concrete lintels. Bed joints of lintels at joints shall be under laid with sheet metal bond breaker.

3.10.3.8.3 Sill Flashing

Sill flashing shall extend the full width of the sill and not less than 100 mm beyond ends of sill except at joint where the flashing shall be terminated at the end of the sill.

3.10.3.8.4 Wall Capping

Wall Capping shall be installed according to the manufacturer's recommendations.

3.10.4 Sealants

Provide a sealant compatible with the material(s) to which it is applied. Do not use a sealant that has exceeded shelf life or has jelled and can not be discharged in a continuous flow from the gun. Apply the sealant in accordance with the manufacturer's instructions with a gun having a nozzle that fits the joint width. Force sealant into joints to fill the joints solidly without air pockets. Tool smooth fresh sealant after application to ensure adhesion. Sealant shall be uniformly smooth and free of wrinkles. Upon completion of sealant application, roughen partially filled or unfilled joints; apply sealant, and tool smooth as specified. Sealer shall be applied over the sealant when and as specified by the sealant manufacturer.

3.10.4.1 Interior Sealant

ASTM C 834 or ASTM C 920, Type S or M, Grade NS, Class 12.5. Use NT, DIN, BS, or EN equal standards.

3.10.4.2 Exterior Sealant

For joints in vertical and horizontal surfaces, provide ASTM C 920, Type S or M, Grade NS, DIN, BS, or EN equal standards.

3.10.4.3 Floor Joint Sealant

(ASTM C 920) Type S or M, Grade P, class 25, use T

3.10.4.4 Primers

Provide a non-staining, quick-drying type and consistency recommended by the sealant manufacturer for the particular application.

Immediately prior to application of the sealant, clean out loose particles from joints. Where recommended by sealant manufacturer, apply primer to joints in concrete masonry units, wood, and other porous surfaces in accordance with sealant manufacturer's instructions. Do not apply primer to exposed finish surfaces.

3.10.4.5 Bond Breakers

Provide the type and consistency recommended by the sealant manufacturer to prevent adhesion of the sealant to backing or to bottom of the joint.

Provide bond breakers to the back or bottom of joint cavities, as recommended by the sealant manufacturer for each type of joint and sealant used, to prevent sealant from adhering to these surfaces. Carefully apply the bond breaker to avoid contamination of adjoining surfaces or breaking bond with surfaces other than those covered by the bond breaker.

3.10.4.6 Backing

Backing shall be 25 to 33 percent oversize for closed cell and 40 to 50 percent oversize for open cell material, unless otherwise indicated.

3.10.4.7 Cleaning Solvents

Provide type(s) recommended by the sealant manufacturer except for aluminum and bronze surfaces that will be in contact with sealant.

3.10.4.8 Surface Preparation

Surfaces shall be clean, dry to the touch, and free from dirt frost, moisture, grease, oil, wax, lacquer, paint, or other foreign matter that would tend to destroy or impair adhesion. Oil and grease shall be removed with solvent and surfaces shall be wiped dry with clean cloths. When resealing an existing joint, remove existing calk or sealant prior to applying new sealant. For surface types not listed below, the sealant manufacturer shall be contacted for specific recommendations.

3.10.4.9 Masking Tape

Masking tape shall be placed on the finish surface on one or both sides of a joint cavity to protect adjacent finish surfaces from primer or sealant smears. Masking tape shall be removed within 10 minutes after joint has been filled and tooled.

3.10.4.10 Backstops

Install backstops dry and free of tears or holes. Tightly pack the back or bottom of joint cavities with backstop material to provide a joint of the depth specified.

3.10.4.11 Protection

Protect areas adjacent to joints from sealant smears. Masking tape may be used for this purpose if removed 5 to 10 minutes after the joint is filled.

3.10.4.12 Final Cleaning

Upon completion of sealant application, remove remaining smears and stains and leave the work in a clean and neat condition.

a. Masonry and Other Porous Surfaces: Immediately scrape off fresh sealant that has been smeared on masonry and rub clean with a solvent as recommended by the sealant manufacturer. Allow excess sealant to cure for 24 hour then remove by wire brushing or sanding.

b. Metal and Other Non-Porous Surfaces: Remove excess sealant with a solvent-moistened cloth.

3.11 WINDOWS, DOORS & GLAZING

3.11.1 Windows

3.11.1.1 Materials

(a) Aluminum Extrusions: Provide alloy and temper recommended by the window manufacturer for the strength, corrosion resistance, and application of required finish, meeting the DIN 1725 raw material requirements, but not less than 215 N/mm2 ultimate tensile strength and not less than 1.5 mm thick at any location for main frame and sash members.

(b) Fasteners: Provide aluminum, nonmagnetic stainless steel, epoxy adhesive, or other materials warranted by the manufacturer to be non-corrosive and compatible with aluminum window members, trim, hardware, anchors, and other components of window units.

1. Reinforcement: Where fasteners screw-anchor into aluminum less than 0.125 inch thick, reinforce the interior with aluminum or nonmagnetic stainless steel to receive screw threads or provide standard non-corrosive pressed-in splined grommet nuts.

2. Exposed Fasteners: Except where unavoidable for application of hardware, do not use exposed fasteners. For application of hardware, use fasteners that match the finish of the member or hardware being fastened, as appropriate.

(c) Anchors, Clips, and Window Accessories: Fabricate anchors, clips, and window accessories of aluminum, nonmagnetic stainless steel, or hot-dip zinc-coated steel or iron complying with the requirements of DIN 1748; provide sufficient strength to withstand design pressure indicated. As a minimum provide 3 anchors on each side of the frame.

(d) Compression-Type Glazing Strips and Weatherstripping: Unless otherwise indicated, and at the manufacturer's option, provide compressible stripping for glazing and weatherstripping such as molded EPDM or neoprene gaskets.

(e) Sealant: For sealants required within fabricated window units, provide type recommended by the manufacturer for joint size and movement. Sealant shall remain permanently elastic non-shrinking,

and non-migrating. Comply with Sealants of these specifications for selection and installation of sealants.

(f) Wire Fabric Insect Screen shall be permanently fixed to the exterior, except for guard towers.

3.11.1.2 Hardware

A. General: Provide the manufacturer's standard hardware fabricated from aluminum, stainless steel, or other corrosion-resistant material compatible with aluminum and of sufficient strength to perform the function for which it is intended.

3.11.1.3 Fixed, Casement, Projected and Horizontal Sliding Windows

Provide window units meeting UL 752, level 5, AK-47 resistance.. This standard shall apply to all window units within guard shack, guard house, guard tower, and guard rooms in Headquarters Building. Provide cam action sweep sash lock and keeper at meeting rails. All other glazing shall be minimum 6mm laminated with .75mm polyvinyl-butyral (PVB) interlayer per UFC 4-010-01.

3.11.1.4 Fabrication

Provide horizontally sliding aluminum windows with factory finish in all buildings to fit the masonry openings. Window openings shall be provided with insect screening permanently fixed to the exterior. Provide a locking device on the interior of each window. Provide anchors on each side of the frame into the adjoining masonry, 3 on each side. Provide weather stripping system for all exterior windows and doors.

3.11.1.5 Finishes

Apply baked enamel in compliance with paint manufacturer's specifications for cleaning, conversion coating, and painting.

(a) Color: White meeting the requirements of DIN 50018

3.11.1.6 Inspection

Inspect openings before beginning installation. Verify that rough or masonry opening is correct and the sill plate is level. Masonry surfaces shall be visibly dry and free of excess mortar, sand, and other construction debris.

3.11.1.7 Installation

Comply with manufacturer's specifications and recommendations for installation of window units, hardware, operators, and other components of the work. Set window units plumb, level, and true to line, without warp or rack of frames or sash. Provide proper support and anchor securely in place. Set sill members and other members in a bed of compound or with joint fillers or gaskets, as shown, to provide weathertight construction. Refer to the Sealant sections for compounds, fillers, and gaskets to be installed concurrently with window units. Coordinate installation with wall flashings and other components of the work.

3.11.1.8 Adjusting

Adjust operating sash and hardware to provide a tight fit at contact points and at weatherstripping for smooth operation and a weathertight closure.

3.11.1.9 Cleaning

Clean aluminum surfaces promptly after installation of windows. Exercise care to avoid damage to protective coatings and finishes. Remove excess glazing and sealant compounds, dirt, and other substances. Lubricate hardware and other moving parts.

3.11.2 Doors

All exterior doors (entry and exist doors) shall be heavy duty metal doors with metal frames. Interior door shall be hollow metal doors with hollow metal frames. All glazed doors shall have 5 mm single glazing in the upper half of the door. Heavy gauge metal exterior doors are required for security of unmanned buildings, such as water treatment building, power station, warehouses, and other buildings requiring higher security. Commercial duty lock sets and hardware shall be used on all doors. Install required louvers, as called for in paragraph 6, in the lower portion of the door. Provide (3) hinges on all doors. Hinges shall be the 5 knuckle type or equivalent. Provide door handles and locksets that can be locked with a key on all doors. All door locks shall have a thumb latch on inside of door such that no key is necessary to exit the room or building. Coordinate the final keying schedule with Contracting Officer prior to ordering lock sets. Generally each building should have 8 master keys fitting all locks, 8 sub-master keys fitting all exterior doors and 3 keys each for each interior door. Include 25% spare key blanks for the amount of keys provided per building. Provide numbering system identifying key to associated room door. All glazing in or adjacent to doors shall be tempered per IBC. Provide weather stripping system for all exterior doors.

3.11.2.1 Solid Plastic & Phenolic doors

Solid Plastic & Phenolic doors and frames are for interior wet room use only. Solid Plastic & Phenolic doors and frames be used for bathrooms, shower rooms, and toilets rooms.

3.11.2.2 Steel Doors

SDI A250.8, except as specified otherwise. Prepare doors to receive specified hardware. Undercut where indicated. Exterior doors shall have top edge closed flush and sealed to prevent water intrusion. Doors shall be 44.5 mm thick, unless otherwise indicated. Doors shall be constructed using heavy gauge steel with minimum thickness of 1.2 mm.

3.11.2.2.1 Accessories

3.11.2.2.1.1 Interior Louvers

SDI 111-C, Louvers shall be stationary sight-proof or lightproof type as required. Louvers for lightproof doors shall not transmit light. Detachable moldings on room or non security side of door; on security side of door, moldings to be integral part of louver. Form louver frames of 0.9 mm thick steel and louver blades of a minimum 0.6 mm. Louvers for lightproof doors shall have minimum of 20 percent net-free opening. Sight-proof louvers shall be inverted "V" blade design with minimum 55 or inverted "Y" blade design with minimum 40 percent net-free opening.

3.11.2.2.1.2 Exterior Louvers

Louvers shall be inverted "Y", "V" or "Z" type. Weld or tenon louver blades to continuous channel frame and weld assembly to door to form watertight assembly. Form louvers of hot-dip galvanized steel of same gage as door facings. Louvers shall have steel-framed insect screens secured to room side and readily removable. Provide aluminum wire cloth, 7 by 7 per 10 mm or 7 by 6 per 10 mm mesh, for insect screens.

3.11.2.2.1.3 Astragals

Provide overlapping steel astragals on pairs of exterior steel doors which will not have aluminum astragals or removable mullions. For interior pairs of fire rated and smoke control doors, provide

stainless steel astragals complying with NFPA 80 for fire rated assemblies and NFPA 105 for smoke control assemblies.

3.11.2.2.1.4 Moldings

Provide moldings around glass of interior and exterior doors. Provide non-removable moldings on outside of exterior doors and on corridor side of interior doors. Other moldings may be stationary or removable. Secure inside moldings to stationary moldings, or provide snap-on moldings. Moldings shall interlock at intersections and shall be fitted and welded to stationary moldings.

3.11.2.2.2 Standard Steel Frames

SDI A250.8, except as otherwise specified. Form frames to sizes and shapes indicated, with welded corners or knock-down field-assembled corners. Provide steel frames for doors, transoms, sidelights, mullions, cased openings, and interior glazed panels, unless otherwise indicated.

3.11.2.2.2.1 Welded Frames

Continuously weld frame faces at corner joints. Mechanically interlock or continuously weld stops and rabbets. Grind welds smooth.

3.11.2.2.2.2 Mullions and Transom Bars

Mullions and transom bars shall be closed or tubular construction and shall member with heads and jambs butt-welded thereto or knock-down for field assembly. Bottom of door mullions shall have adjustable floor anchors and spreader connections.

3.11.2.2.2.3 Stops and Beads

Form stops and beads from 0.9 mm thick steel. Provide for glazed and other openings in standard steel frames. Secure beads to frames with oval-head, countersunk Phillips self-tapping sheet metal screws or concealed clips and fasteners. Space fasteners approximately 300 to 400 mm on centers; miter molded shapes at corners; butt or miter square or rectangular beads at corners.

3.11.2.2.3 Anchors

Provide anchors to secure the frame to adjoining construction. Provide steel anchors, zinc-coated or painted with rust-inhibitive paint, anchors not lighter than 1.2 mm thick.

3.11.2.2.3.1 Wall Anchors

Provide at least three anchors for each jamb. For frames which are more than 2285 mm in height, provide one additional anchor for each jamb for each additional 760 mm or fraction thereof.

a. Masonry: Provide anchors of corrugated or perforated steel straps or 5 mm diameter steel wire, adjustable or T-shaped;

b. Completed openings: Secure frames to previously placed concrete or masonry with expansion bolts

3.11.2.2.3.2 Floor Anchors

Provide floor anchors drilled for 10 mm anchor bolts at bottom of each jamb member. [Where floor fill occurs, terminate bottom of frames at the indicated finished floor levels and support by adjustable extension clips resting on and anchored to the structural slabs.

3.11.2.2.4 Fire and Smoke Doors and Frames

The requirements of NFPA 80 and NFPA 105 respectfully shall take precedence over details indicated or specified.

3.11.2.2.5 Weather-stripping, Integral Gasket

Black synthetic rubber gasket with tabs for factory fitting into factory slotted frames, or extruded neoprene foam gasket made to fit into a continuous groove formed in the frame, may be provided in lieu of head and jamb seals. Insert gasket in groove after frame is finish painted.

3.11.2.2.6 Hardware Preparation

Provide minimum hardware reinforcing gages as specified in ANSI A250.6. Drill and tap doors and frames to receive finish hardware. Prepare doors and frames for hardware in accordance with the applicable requirements of SDI A250.8 and ANSI A250.6. For additional requirements refer to BHMA A115. Drill and tap for surface-applied hardware at the project site. Build additional reinforcing for surface-applied hardware into the door at the factory. Locate hardware in accordance with the requirements of SDI A250.8, as applicable. Punch door frames, with the exception of frames that will have weather-stripping or lightproof or soundproof gasketing, to receive a minimum of two rubber or vinyl door silencers on lock side of single doors and one silencer for each leaf at heads of double doors. Set lock strikes out to provide clearance for silencers.

3.11.2.2.7 Finishes

All surfaces of doors and frames shall be thoroughly cleaned, chemically treated and factory primed with a rust inhibiting coating as specified in SDI A250.8, or paintable A25 galvannealed steel without primer. Where coating is removed by welding, apply touchup of factory primer.

3.11.2.2.8 Fabrication and Workmanship

Finished doors and frames shall be strong and rigid, neat in appearance, and free from defects, waves, scratches, cuts, dents, ridges, holes, warp, and buckle. Molded members shall be clean cut, straight, and true, with joints coped or mitered, well formed, and in true alignment. Dress exposed welded and soldered joints smooth. Design door frame sections for use with the wall construction indicated. Corner joints shall be well formed and in true alignment. Conceal fastenings where practicable. On wraparound frames for masonry partitions, provide a throat opening 3 mm larger than the actual masonry thickness. Design other frames in exposed masonry walls or partitions to allow sufficient space between the inside back of trim and masonry to receive calking compound.

3.11.2.2.9 Installation of Doors & Frames

3.11.2.2.9.1 Frames

Set frames in accordance with SDI 105. Plumb, align, and brace securely until permanent anchors are set. Anchor bottoms of frames with expansion bolts or powder-actuated fasteners. Build in or secure wall anchors to adjoining construction. Backfill frames with mortar. When an additive is provided in the mortar, coat inside of frames with corrosion-inhibiting bituminous material. For frames in exterior walls, ensure that stops are filled with rigid insulation before grout is placed.

3.11.2.2.9.2 Grouted Frames

For frames to be installed in exterior walls and to be filled with mortar or grout, fill the stops with strips of rigid insulation to keep the grout out of the stops and to facilitate installation of stop-applied head and jamb seals.

3.11.2.2.9.3 Doors

Hang doors in accordance with clearances specified in SDI A250.8. After erection and glazing, clean and adjust hardware.

3.11.2.2.9.4 Fire and Smoke Doors and Frames

Install fire doors and frames, including hardware, in accordance with NFPA 80.

3.11.2.2.9.10 Protection and Cleaning

Protect doors and frames from damage. Repair damaged doors and frames prior to completion and acceptance of the project or replace with new, as directed. Wire brush rusted frames until rust is removed. Clean thoroughly. Apply an all-over coat of rust-inhibitive paint of the same type used for shop coat. Upon completion, clean exposed surfaces of doors and frames thoroughly. Remove mastic smears and other unsightly marks.

3.11.2.3 Wood Doors and Frames

Provide doors that are hollow steel (exterior) and wood (interior), solid core, 900/1000/1100/1200 mm. Wide x 2200 mm. High x 45 mm. Thick with steel frame to match new door masonry openings. All glazed doors shall have 5 mm. single tempered glazing. Wired glass shall be used for glazing for fire rated doors, if required. Fire rated doors must have UL seal or European equivalent attached.
.
3.11.2.3.1 Accessories

3.10.2.5.1.1 Door Louvers

Fabricate from wood and of sizes indicated. Louvers shall be of the manufacturer's standard design and shall transmit a minimum of 35 percent free air. Louvers shall be the slat type.

3.11.2.3.1.1 Door Lite Openings

Provide glazed openings with the manufacturer's standard wood moldings except that moldings for doors to receive natural finish shall be of the same species and color as the face veneers. Moldings for flush doors shall be lip type.

3.11.2.3.1.2 Weather Stripping

Provide weather-stripping that is a standard cataloged product of a manufacturer regularly engaged in the manufacture of this specialized item. Weather stripping shall be looped neoprene or vinyl held in an extruded non-ferrous metal housing. Air leakage of weather stripped doors shall not exceed 0.003125 cubic meter per second of air per square meter of door area when tested in accordance with ASTM E 283.

3.11.2.3.2 Pre-fitting

At the Contractor's option, doors may be provided factory pre-fit. Doors shall be sized and machined at the factory by the door manufacturer in accordance with the standards under which they are produced. The work shall include sizing, beveled edges, mortising, and drilling for hardware and providing necessary beaded openings for glass and louvers. Provide the door manufacturer with the necessary hardware samples, and frame and hardware schedules as required to coordinate the work.

3.11.2.3.3 Finishes

Provide door finish colors as selected by the Contracting Officer from the color selection samples.

3.11.2.3.4 Water-Resistant Sealer

Provide a water-resistant sealer compatible with the specified finish as approved and as recommended by the door manufacturer.

3.11.2.3.5 Installation

Before installation, seal top and bottom edges of doors with the approved water-resistant sealer. Seal cuts made on the job immediately after cutting using approved water-resistant sealer. Fit, trim, and hang doors with a 2 mm minimum, 3 mm maximum clearance at sides and top, and a 5 mm minimum, 6 mm maximum clearance over thresholds. Provide 10 mm minimum, 11 mm maximum clearance at bottom where no threshold occurs. Bevel edges of doors at the rate of 3 mm in 50 mm. Door warp shall not exceed 6 mm when measured in accordance with WDMA I.S. 1-A.

Install doors in strict accordance with the manufacturer's printed instructions and details. Provide weather stripping on exterior swing-type doors at sills, heads and jambs to provide weather tight installation. Apply weather stripping at sills to bottom rails of doors and hold in place with a brass or bronze plate. Apply weather stripping to door frames at jambs and head. Shape weather stripping at sills to suit the threshold.

3.11.2.4 Overhead Coiling Doors

Doors shall be fabricated from interlocking cold-rolled slats, designed to withstand building wind loading and be installed with wind locks. Slats shall be continuous for the width of the door. For doors not exceeding 4.27 m, slats shall be flat-profile design, with a depth of not less than 15.9 mm, a center to center width not more than 69.9 mm, and not less than a 1.21 mm uncoated thickness. Provide weather stripping for door-head and door jamb guides, and a bottom astragal. Weather stripping and astragal shall be natural rubber or neoprene rubber. Curtain jamb guides shall be fabricated from a combination of steel angles of sufficient size to retain curtain against the specified wind. Guides shall be fabricated from structural quality steel angles. Door shall have manufacturer’s standard five pin tumbler locks; keyed. Doors shall be counterbalanced by an adjustable, steel, helical torsion spring mounted around a steel shaft in a spring barrel and connected to the door curtain with the required barrel rings. Hoods shall be fabricated from steel sheets with minimum yield strength of 227.5 MPa.

Counterbalance-barrel components shall be as follows:

(a) Spring barrels shall be hot-formed structural-quality carbon steel, welded or seamless pipe. Pipe shall be of sufficient diameter and wall thickness to limit deflection to a maximum of 1/360 of the span.

(b) Counterbalance springs shall be oil-tempered helical steel springs designed with a safety factor of 4. Springs shall be sized to counterbalance the weight of the curtain at any point of its travel, and shall be capable of being adjusted to counterbalance not less than 125% of the normal curtain load. Spring adjustment shall be arranged in such a way that the curtain need not be raised or lowered to secure the adjustment.

(c) Counterbalance shafts shall be case-hardened steel of the proper size to hold the fixed ends of the spring and carry the torsion load of the spring.

(d) Barrel plugs shall be fabricated from cast steel machined to fit the ends of the barrel. Plugs shall secure the ends of the spring to the barrel and the shaft.

(e) Barrel rings shall be fabricated from malleable iron of the proper involute shape to coil the curtain in a uniformly increasing diameter.

(f) Shaft bearings shall be factory sealed ball bearings of the proper size for load and shaft diameters.

(g) Door operators shall consist of an endless steel hand chain, chain-pocket wheel and guard, and a geared reduction unit of at least a 3:1 ratio. Required pull for operation shall not exceed 16 kg. Chain hoists shall have a self-locking mechanism allowing the curtain to be stopped at any point in its upward/downward travel and to remain in that position until moved to the fully open or closed position. Hand chains shall be cadmium-plated alloy steel with a yield point of at least three times the required hand-chain pull. Pretreated zinc-coated steel sheets shall be given the manufacturer's standard prime coat and an enamel finish coat applied to the exterior face after forming.

(h) After installation, doors, track, and operating equipment will be examined and tested for general operation and weather against the specified wind pressure, and weather resistance. Doors that fail the required tests shall be adjusted and retested. Doors that have been adjusted and fail subsequent tests shall be removed and replaced with new doors at no additional cost.

3.11.3 Glass & Glazing

Glazing shall conform to ASTM C 1036 or ASTM C 1172 or equal.

3.11.3.1 Tempered Glass

Tempered glass shall be kind FT fully tempered flat type. Class 1 clear, condition A uncoated surface, Quality q3-glazing select, conforming to ASTM, DIN, BS or EN standards. Color shall be clear.

3.11.3.2 Laminated Glass

Laminated glass shall be constructed out of two, 3mm glass panes bonded together with a minimum .75mm polyvinyl-butyral (PVB) interlayer. Follow the UFC 4-010-01 requirements for ballistic resistant glazing, where required, at the ECP.

3.11.3.3 Insulated Glass

All exterior glazing shall be insulated, constructed of two panes of laminated glass separated by hermetically sealed 12mm airspace.

3.11.3.4 Glazing Accessories

3.11.3.4.1 Sealant

Sealant shall be elastomeric conforming to ASTM, DIN, BS, or EN standards. Type S or M, Grade NS, Class 12.5, Use G, of type chemically compatible with setting blocks, preformed sealing tape and sealants used in manufacturing insulation glass. Color of sealant shall be as selected from manufacturer's full range of standard colors by Contracting Officer.

3.11.3.4.2 Glazing Gaskets

Glazing gaskets shall be extruded with continuous integral locking projection designed to engage into metal glass holding members to provide a watertight seal during dynamic loading, building movements and thermal movements. Glazing gaskets for a single glazed opening shall be continuous one-piece units with factory-fabricated injection-molded corners free of flashing and burrs. Glazing gaskets shall be in lengths or units recommended by manufacturer to ensure against pull-back at corners.

3.11.3.4.3 Fixed Glazing Gaskets

Fixed glazing gaskets shall be closed-cell (sponge) smooth extruded compression gaskets of cured elastomeric virgin neoprene compounds conforming to ASTM, DIN, BS, or EN standards.

3.11.3.4.4 Wedge Glazing Gaskets

Wedge glazing gaskets shall be high-quality extrusions of cured elastomeric virgin neoprene compounds, ozone resistant, conforming to ASTM, DIN, BS, or EN standards.

3.11.3.4.5 Putty and glazing Compound

Glazing compound shall conform to ASTM, DIN, BS, or EN standards for face-glazing metal sash. Putty shall be linseed oil type conforming to DIN, BS, or EN standards for face-glazing primed wood sash. Putty and glazing compounds shall not be used with insulating glass or laminated glass.

3.11.3.4.6 Setting and Edge Blocking

Neoprene setting blocks shall be dense extruded type conforming to ASTM, DIN, BS, or EN standards. Silicone setting blocks shall be required when blocks are in contact with silicone sealant. Profiles, lengths and locations shall be as required and recommended in writing by glass manufacturer.

3.11.3.4.7 Preparation

Openings and framing systems scheduled to receive glass shall be examined for compliance with glass manufacturer's recommendations including size, squareness, offsets at corners, presence and function of weep system, face and edge clearance requirements and effective sealing between joints of glass-framing members. Detrimental materials shall be removed from glazing rabbet and glass surfaced and wiped dry with solvent. Glazing surfaces shall be dry and free of frost.

3.11.3.4.8 Installation

Glass and glazing work shall be performed in accordance with, glass manufacturer's instructions and warranty requirements. Glass shall be installed with factory labels intact and removed only when instructed. Edges and corners shall not be ground, nipped or cut after leaving factory. Springing, forcing or twisting of units during installation will not be permitted.

3.11.3.4.9 Cleaning

Upon completion of project, outside surfaces of glass shall be washed clean and the inside surfaces of glass shall be washed and polished in accordance with glass manufacturer's recommendations.

3.11.3.5 Protection

Glass work shall be protected immediately after installation. Glazed openings shall be identified with suitable warning tapes, cloth, or paper flags, attached with non-staining adhesives. Reflective glass shall be protected with a protective material to eliminate any contamination of the reflective coating. Protective material shall be placed far enough away from the coated glass to allow air to circulate to reduce heat buildup and moisture accumulation on the glass. Glass units which are broken, chipped, cracked, abraded, or otherwise damaged during construction activities shall be removed and replaced with new units.

3.12 FINISHES

All finishes, colors and materials in existing building and new buildings shall match. See Section 01335 for color submittals required. Provide color boards with all materials for COR approval prior to ordering materials.

3.12.3 Exterior Walls

All building facilities for each site in this project are pre-manufactured (warehouse, barracks, MWR and ECP buildings) and have a factory exterior finish applied. Some structures may require additional wall structure, painting or finish as directed by the contracting officer or by the specifications 01010 and 01015.

3.12.4 Interior Walls

Interior walls shall be painted with 2 coats of semi-gloss off-white with less than .06% lead by weight color to be selected by the Contracting Officer from the color board provided by the Contractor.

3.12.5 Interior Ceilings

Most ceilings are pre-manufactured and have a factory applied finish. For other ceilings, gypsum board is used with framing supports for Gypsum board shall be as follows: For ½" thick gypsum board structural fastener supports shall be not further apart than 400 mm. If gypsum board is thicker follow guidelines in ASTM C 840 for supports and fastener frequency. Note that for fire rated assemblies, 15 mm thickness type X gypsum board is used if specified within the 01015 and 01010.

3.12.6 Exposed Exterior Steel trim, Frames, Doors and Pipe Railings

Paint with one coat oil-based primer, with 2 coats of oil-based alkyd gloss enamel, color to be selected by the Contracting Officer from the color board provided by the Contractor.

3.12.7 Exposed Wood Trim, Frames and Doors

Paint with one coat oil-based primer, 2 coats of gloss enamel, color to be selected by the Contracting Officer from the color board provided by the Contractor

3.12.8 Tile Work for wet areas, where used

Tile work shall not be performed unless the substrate and ambient temperature is at least 10 degrees C and rising. Temperature shall be maintained above 10 degrees C while the work is being performed and for at least 7 days after completion of work. Upon completion, tile surfaces shall be thoroughly cleaned in accordance with manufacturer's approved cleaning instructions. Acid shall not be used for cleaning glazed tile. Floor tile with resinous grout or with factory mixed grout shall be cleaned in accordance with instructions of the grout manufacturer. After the grout has set, tile wall surfaces shall be given a protective coat of a non-corrosive soap or other approved method of protection.

3.12.8.1 Floors in wet areas shall be ceramic tile with thin set mortar. Joints shall be 2-3 mm. Waterproof gray grout shall be applied the full depth of the tile. Floors shall slope, minimum 1/50, to floor drains. Slope shall be obtained with sloping mortar bed of minimum 20 mm thickness. Provide continuous waterproofing membrane beneath sloping mortar bed, turn up wall 300 mm behind wall base. Membrane shall be fully sealed at joints and shall shed water into body of floor drain. Color of tile shall be selected by the Contracting Officer from samples provided by the Contractor.

3.12.8.2 Walls in wet areas shall be tiled with 150 mm x 150 mm glazed ceramic tile up to 2 meters above the floor to include interior of toilet stalls, showers and behind sinks. Joints shall be 2-3 mm. Waterproof gray grout shall be applied full depth of the tile. Grout shall cure for 72 hours and then be sealed with a commercial grout sealant in two coats. Color of tile shall be selected by the Contracting Officer from samples provided by the Contractor.

3.13 SPECIALTIES

3.13.1 Mirrors

0.6 m x 0.9 m, 6 mm plate glass shall be mounted above all lavatories. Mount bottom of mirrors 1.1m

above finished floor (AFF).

3.13.2 Toilet Paper Holders

Toilet paper holders, stainless steel, shall be installed approximately 600 mm AFF above floor.

3.13.3 Shower Curtain Rods & Shower Curtain

Shower curtain rods, stainless steel, heavy duty, 18 gauge shall be mounted between the screen walls of each shower stall. Mount rod at 2.0 m above finished floor. Provide a shower curtain with support rings for each shower stall, 150 mm from ceiling surface.

3.13.4 Grab-Bars

Stainless steel grab-bars, heavy duty, 18 gauge, two each 900 mm and 1050 mm long, 40 mm diameter shall be mounted behind and beside all eastern toilets, and bathtubs as they occur.

3.13.5 Paper Towel Dispensers

Paper towel dispensers, 0.683 mm Type 304 stainless steel, surface mounted, 1200 mm AFF. Furnish tumbler key lock locking mechanism.

3.13.6 Light Duty Metal Shelf

Provide a 600 mm long, light duty stainless steel shelf and brackets over each lavatory.

3.13.7 Robe Hooks

Robe hooks on all toilet and shower stalls required, mounted at 1800 mm AFF.

4.0 STRUCTURAL

4.1 GENERAL

The project consists of various structures. The new buildings shall be provided with a reinforced concrete slab foundation that is properly placed on suitable compacted ground area and shall be in accordance with the recommendations from the geotechnical investigation. The reinforced concrete foundation shall be designed by the Contractor. Building foundations shall be founded a minimum of 800 mm below grade.

4.2 DESIGN

Design shall be performed and design documents signed by a registered professional architect and/or engineer. Calculations shall be in SI (metric) units of measurements. All components of the building shall be designed and constructed to support safely all loads without exceeding the allowable stress for the materials of construction in the structural members and connections. All building exterior walls shall be constructed with reinforced CMU, or reinforced concrete unless otherwise stated in sections 01010 or 01015.

4.3 STANDARDS

The Contractor should use the following American standards to provide sound structural design if local standards are not available, relevant, or applicable. The Contractor shall follow American Concrete Institute Standards for design and installation of all concrete structures.

Concrete 280.0 kg./sq.cm (f'c) (4000psi) a minimum specified compressive

strength	@ 28 days (ASTM-. C 39 and ACI 318) with a maximum water-cement ratio of 0.5.
Plaster strength	140.0 kg./sq.cm (f'c) (2000psi) conforming to ASTM C 926.
Steel Reinforcement	4218.0 kg./sq.cm(Fy= 60.0 ksi),yield strength.
Welded Wire Fabric	ASTM A185
Anchor Bolts	ASTM A307 using A36 steel.
Concrete Masonry Units	ASTM C90, Type I (normal wt, moisture Cntrl).
Mortar	ASTM C270, Type S (Ultimate compressive strength of 130.0 kg/sq. cm.)
Proportion	1 part cement, 0-1/2 part lime and 4-1/2 parts aggregate
Grout	ASTM C476 (Slump between 200 mm to 250 and Compressive Strength 14 MPa (2000 psi) at 28 days.
Joint Reinforcement	Standard 9 gauge minium, Ladder Type
Structural Steel	ASTM A36: 2530.0 kg./sq.cm (Fy = 36,000psi)
Welding	AWS (American Welding Society) D1.1-2002.

4.4 DEAD AND LIVE LOADS

Dead loads consist of the weight of all materials of construction incorporated in the buildings. Live loads used for design shall be in accordance with the Structural Load Data, UFC-3-310-01, and edition as referenced herein.

4.5 WIND LOADS

Wind loads shall be calculated using a "3-second gust" wind speed of 135 km/hr.

4.6 SEISMIC

The building and all parts thereof shall be designed for the seismic requirements as defined by the International Building Code referenced herein. Spectral ordinates shall be S_s = 1.28g and S_1 = 0.51g.

4.7 STRUCTURAL CONCRETE

Concrete structural elements shall be designed and constructed in accordance with the provisions of the American Concrete Institute, Building Code Requirements for Structural Concrete, ACI 318, referenced edition. A minimum cylinder 28 day compressive strength of 21 MPa (4000 psi) shall be used for design and construction of all concrete. Reinforcing steel shall be deformed bars conforming to American Society for Testing and Materials (ASTM) publication ASTM a 615, Deformed and Plain Billet-Steel Bars for Concrete Reinforcement. Concrete at or below grade shall have maximum water-cement ration of 0.450. No concrete shall be placed when the ambient air temperature exceeds 32 degrees C (90 degrees F) unless an appropriate chemical retardant is used. In all cases when concrete is placed at 32 degrees C (90 degrees F) or hotter it shall be covered and kept continuously wet for a minimum of 48 hours. Concrete members at or below grade shall have a minimum concrete cover over reinforcement of 75 mm (3 inch).

4.8 MASONRY

Masonry shall be designed and constructed in accordance with the provisions of Building Code Requirements for Masonry Structures, ACI 530/ASCE 5/TMS 402, latest editions. Mortar shall be Type S and conform to ASTM C 270, latest edition. Masonry shall not be used below grade, unless for fully grouted and reinforced foundation stem walls. **All cells of CMU walls shall be fully grouted and reinforced. Exterior CMU walls are 200 mm thickness; interior are 100 mm thickness.**

4.9 STRUCTURAL STEEL

Structural steel shall be designed and constructed in accordance with the provisions of American Institute of Steel Construction (AISC), Specifications for Structural Steel Buildings, 9th Edition. Design of

cold-formed steel structural members shall be in accordance with the provisions of American Iron and Steel Institute (AISI), Specifications for Design of Cold-Formed Steel Structural Members.

4.9.1 Steel Roof Joists

Steel roof joists shall be placed according to the roof design and roof manufacturer specifications. Steel purlins shall be installed perpendicular to the steel beams. Use continuous metal roof sheets from ridge to eave to avoid constructing roof seams. In lieu of the continuous metal roof sheets, the Contractor can submit a plan for roofing seams; however, the plan must show a detail of how leaks will be avoided, and the Contracting Officer before application must approve the plan. Steel “hat channels” shall be installed on the bottom side of steel beams for the installation of gypsum board with screws. Provide all necessary metal framing for roof fascia and soffits. See structural paragraph for structural characteristics of steel joists.

.

4.10 METAL DECK

Deck units shall conform to SDI Publication Number 29. Panels of maximum possible lengths shall be used to minimize end laps. Deck units shall be fabricated in lengths to span three or more supports with flush, telescoped or nested 50 mm (2 inch) laps at ends, and interlocking, or nested side laps. Metal deck units shall be fabricated of steel thickness required by the design and shall be galvanized.

4.11 OPEN WEB STEEL JOIST

Open web steel joists shall conform to SJI Specifications and Tables. Joists shall be designed to support the loads given in the standard load tables of SJI Specifications and Tables.

4.12 FOUNDATIONS

Foundations shall be in accordance with the Geotechnical requirements of this RFP.

4.13 EARTHWORK AND FOUNDATION PREPARATION

4.13.1 Capillary Water barrier

ASTM C 33 fine aggregate grading with a maximum of 3 percent by weight passing ASTM D 1140, 75 micrometers, No. 200 sieve, or 37.5mm and no more than 2 percent by weight passing the 4.75mm No. 4 size sieve and conforming to the soil quality requirements specified in the paragraph entitled “Satisfactory Materials.”

4.13.2 Satisfactory Materials

Any materials classified by ASTM D 2487 as GW, GW-GM, GW-GC, SW, SW-SM, SM, SW-SC, SC, or CL and free of debris, roots, wood, scrap material, vegetation, refuse, soft unsound particles, or objectionable materials. Unless specified otherwise, the maximum particle diameter shall be one-half the lift thickness at the intended location.

4.13.3 Unsatisfactory Materials

Any materials which do not comply with the requirements set forth in the Satisfactory Materials paragraph. Unsatisfactory materials also include man-made fills, trash, refuse, or backfills from previous construction. Unsatisfactory material also includes material classified as satisfactory which contains root and other organic matter, frozen material, and stones larger than 75mm. The Contracting Officer shall be notified of any unsatisfactory materials.

4.13.4 Clearing and Grubbing

Unless indicated otherwise, remove tress, stumps, logs, shrubs, brush and vegetation, and other items that would interfere with construction operations within lines 1.5 meters outside of the building and structure line. Remove stumps entirely. Grub out matted roots and roots over 50mm in diameter to at least 460mm below existing surface.

4.13.5 Stripping

Strip suitable soil from the site where excavation or grading is indicated and stockpile separately from other excavated material. Material unsuitable for use as topsoil shall be stockpiled and used for backfilling. Locate topsoil so that the material can be used readily for the finished grading. Where sufficient existing topsoil conforming to the material requirements is not available on site, provide borrow materials suitable for use as topsoil. Protect topsoil and keep in segregated piles until needed.

4.13.6 Excavation and Compaction of Fill

Excavate to contours, elevation, and dimensions indicated. Reuse excavated materials that meet the specified requirements for the material type required at the intended location. Keep excavations free from water. Excavate soil disturbed or weakened by Contractor's operations, soils softened or made unsuitable for subsequent construction due to exposure to weather. Excavations below indicated depths will not be permitted except to remove unsatisfactory material. Unsatisfactory material encountered below the grades shown shall be removed as directed. Refill with satisfactory material and compact to at least 95 percent of the maximum dry density, as determined by the Modified Proctor laboratory procedure. ASTM D 1557 shall be used for producing the Modified Proctor moisture-density curve, unless the soil to be compacted includes more than 30% retained on the 19 mm (3/4") sieve. In this case, the Contractor must replace the ASTM D 1557 laboratory compaction procedure with AASHTO T 180, Method D, corrected with AASHTO T 224.

During compaction, the moisture content of the soil shall be within 1.5 percent of the optimum moisture content, as determined by the Modified Proctor laboratory procedure. The thickness of compacted lifts shall not exceed 15 cm and the dry density of each compacted lift shall be tested by either sand cone (ASTM D 1556) or nuclear gage (ASTM D 2292). If the nuclear gage is used, it must first be compared to sand cone tests for each soil type to verify the accuracy of the nuclear gage measurements for moisture content, wet density, and dry density. Furthermore, every tenth nuclear gage test must be accompanied by a sand cone test and these verification data must be summarized and submitted to the Contracting Officer. Density tests shall be performed at a frequency of not less than one test for each 200 square meters and not less than two tests per compacted lift.

4.13.7 Structures with Spread Footings

Ensure that footing subgrades have been inspected and approved by the Contracting Officer prior to concrete placement. Fill over excavations with concrete during foundation placement.

5.0 GEOTECHNICAL

5.1 SOIL INVESTIGATION

Existing geotechnical information is not available at the project site. Any site-specific geotechnical data required to develop foundations, materials, earthwork, and other geotechnical related design and construction activities for this project shall be the Contractor's responsibility. The Contractor shall develop all pertinent geotechnical design and construction parameters by appropriate field and laboratory investigations and analyses. The Contractor shall produce a detailed geotechnical report containing field exploration and testing results, laboratory testing results (particle sizes and distribution, liquid and plastic limit test, and moisture and density test, etc.). Information in the report shall include, but not limited to: existing geotechnical (e.g. surface and subsurface) conditions, location of subsurface exploration logs on site plan, exploration point, allowable soil bearing capacity and foundations recommendations, bearing capacity, pavement design criteria (e.g. CBR values, K values), ground-

water levels, and construction materials (e.g. concrete cement, asphalt, and aggregates). Two copies of the detailed geotechnical report shall be submitted to the Contracting Officer.

5.2 GEOTECHNICAL QUALIFICATIONS

A geotechnical engineer or geotechnical firm responsible to the Contractor shall develop all geotechnical engineering design parameters. The geotechnical engineer or geotechnical firm shall be qualified by: education in geotechnical engineering; professional registration; and a minimum of ten (10) years of experience in geotechnical engineering design.

6.0 MECHANICAL

6.1 GENERAL

The work covered by this section consists of design, supply, fabrication and installation of new building heating, ventilation and air-conditioning (HVAC) systems. It also includes the delivery to site, erection, setting to work, adjusting, testing, balancing and handing over in perfect operating and running condition all of the HVAC equipment including all necessary associated mechanical works.

6.2 SPECIALIST SUB-CONTRACTORS QUALIFICATIONS

The heating, ventilation, and air-conditioning works shall be executed by an air-conditioning specialist sub-contractor experienced in the design and construction HVAC equipment and systems . The HVAC heating and cooling load calculations shall be prepared using recognized HVAC load analysis programs such as Trane “Trace” or Carrier “HAP”. The heating and cooling load calculations shall take into account the site elevation and ambient design temperatures when determining required HVAC equipment capacities and airflows. The HVAC specialist shall submit the complete HVAC analysis at the 65% design submittal. The HVAC analysis shall clearly state what type of systems are to be used and how the system will satisfy the specified indoor design conditions. Provide related psychrometric charts showing the air wet bulb and dry bulb temperatures at each section of the heat/cool unit during both design heating and cooling operation.
Provide complete, edited specifications using the UFGS specs for the applicable HVAC systems. The edited specifications shall be submitted along with the 65% design submittal.

6.3 CODES, STANDARDS AND REGULATIONS

The equipment, materials and works covered under the heating, ventilation and air-conditioning services shall conform to the referenced standards, codes and regulations where applicable except where otherwise mentioned under each particular clause.

6.4 DESIGN CONDITIONS

Outside Design Conditions **(Contractor shall verify the ambient conditions with available and reliable local weather data)**.

Kandahar area:
Latitude – (approx.) 31.5 deg. North
Longitude – (approx.) 65.85 deg. East
Elevation – (approx.) 1010 M (3314 ft.)
Summer – 41 deg C (106 deg F) Dry Bulb (DB) [& 21.7 deg C (71 deg F)] Wet Bulb (WB)
Winter – (-1.7 deg C/29 deg F)
Daily Range – 21 F)

6.4.1 Indoor Design Condition

	Cooling	Heating

Barracks	25.6 C (78 F)	20 C (68 F)
Administrative buildings	25.6 C (78 F)	20 C (68 F)
Bathroom/Shower bldgs	30 C (85F)	20 C (68 F)
Maintenance facilities	30 C (85F)	12.7 C (55 F)
Warehouses	30 C (85F)	12.7 C (55 F)

6.4.2 Noise Level

Noise levels inside occupied spaces generated by HVAC systems shall not exceed NC 35

6.4.3 Internal Loads

a. Occupancy: Use ASHRAE standards to calculate sensible and latent heat from people. In general, light/moderate office work is 73watts sensible and 45watts latent.
b. Lighting: 21.5 W/m2 (2 W/Ft2) maximum (however lighting levels shall meet minimum requirements and shall be accounted for in the heating and cooling loads based on the actual lighting design).
c. Outdoor Air: Outdoor ventilation air shall be provided per ASHRAE Standard 62.1 with the exception of guard towers, guard shacks, and storage facilities. In general this requires 2.5 L/s/Person (5 CFM/Person) and 0.3 L/s per square meter of floor space (0.06 CFM/sqft); Latrine/Bathroom Exhaust– 85 CMH (50 CFM) per toilet, urinal, and shower head.
d. Building Pressurization: 1.3 mm W.G. (0.05 in W.G.) for occupied spaces such as admin offices, living quarters and sensitive electronic spaces; Maintain negative pressure in toilets and janitor closets..

6.4.4 Thermal Performance

External building assemblies shall meet the requirements of TI-800, Design Criteria, UFC 3-400-01 Design: Energy Conservation, and ASHRAE Standard 90.1, latest editions, but shall meet the following minimum requirements:

Assembly	Minimum Thermal Insulation Resistance Value (R-value)
Exterior walls (above grade)	RSI 1.936 (R 13)
Ceilings/roof	RSI 3.345 (R 30)
Floor (over unheated space)	RSI 3.345 (R 19)
Exterior doors	RSI 0.25 (R 1.43)
Exterior windows/(glazing within doors)	RSI 0.308(R 1.75)
Skylights	RSI 0.18 (R 1.02)

RSI is measured in m2-K/W; R is measured in sqft-F-hr/BTU. The design analysis shall include exterior building assembly R-value calculations for each separate assembly. The calculations shall be in accordance with ASHRAE Fundamentals or EN ISO 6946. The calculations shall indicate the thermal conductivity, thickness, and R-value of each assembly component and the overall R-value for the assembly. The assembly R-value calculations shall investigate the effects of thermal bridging from the use of metal building material such as metal wall studs, roof Purlins, wire mesh wall ties or bolts, structural members, etc.

Window glazing surface area shall be determined based on the architectural design per each building and shall not be an assumed percentage of the wall area.

6.5 NEW AIR CONDITIONING & HEATING EQUIPMENT

Environmental control of the facilities shall be achieved by HVAC equipment as listed below and approved by the U.S. Government. Unless otherwise noted, the Contractor may choose any

combination of equipment to achieve the inside design conditions specified for the floor plans that is the most Life Cycle Cost Effective to the government. Contractor shall size and select equipment based on equipment manufacturer's performance data at the project site elevation and ensures the equipment's performance meets the design heating and cooling sizing requirements. Air conditioning equipment shall be of the highest EER available.

Facility Type	Cooling	Heating	Type of HVAC System	Remarks
Barracks	25.6C 78 F	20C 68 F	Packaged heat pump unit	Ducted forced air system
Admin Facility	25.6C 78 F	20C 68 F	Packaged heat pump unit	Reuse existing
MWR Facility	25.6C 78 F	20C 68 F	Packaged heat pump unit	Reuse existing
ECP Facilities	25.6C 78 F	20C 68 F	Split pack heat pump units	

6.5.2 Unitary Ducted Heat Pump Units

Ducted heat pump units shall be unitary in design and factory manufactured ready for installation. Heat pump units shall provide cooling during summer and heating during winter. The unit shall consist of DX evaporator cooling coil, blower, supplemental electric heater elements, washable filter, and condenser unit containing the compressor, condenser coil, fans and all internal controls/fittings complete all mounted in a weatherized housing finished for exposed installation. The unit shall be mounted on steel supports or on a concrete pad. Copper refrigerant suction and liquid piping shall be sized, insulated and installed in accordance to unit manufacture recommendations. Unit temperature control shall include wall mounted adjustable thermostat, blower on-off-auto switch and heating-cooling change over control.

6.5.3 Unitary (ductless split) Heat Pump Units

Ductless split units shall be unitary in design and factory manufactured ready for installation. Heat pump units shall provide cooling during summer and heating during winter. Evaporator unit shall consist of a DX evaporator cooling coil, blower, supplemental electric heater elements and washable filter all mounted in a housing finished for exposed installation. Cooling coil condensate piping shall route to and discharge to the sanitary sewer system. The condensing unit will contain compressor, condenser coil, and all internal controls/fittings complete to include a weatherized housing. Outdoor condensing unit shall be mounted on steel supports or on a concrete pad. Copper refrigerant suction and liquid piping shall be sized, insulated and installed in accordance to unit manufacture recommendations. Unit temperature control shall include wall mounted adjustable thermostat, blower on-off-auto switch and heating-cooling change over control.

6.6 DUCTWORK

Air shall be distributed from central Air Handling Units (AHUs) to achieve proper airflow throughout the facility by means of air distribution ductwork. Air distribution system shall be comprised of supply and return ductwork, fittings, grilles, registers, and/or diffusers. Ductwork shall be constructed of galvanized steel or aluminum sheets and installed as per SMACNA "HVAC Duct Construction Standards (Metal and Flexible)." Flexible non-metallic duct may be used for final unit/diffuser connection in ceiling plenums. These flexible duct run-outs shall be limited to 3 meters in length.

6.6.1 Duct Insulation

Duct insulation shall be provided for all supply ductwork that is not located in the conditioned space and for return ductwork not located within the conditioned space. All ductwork exterior to the building shall be insulated with a minimum RSI=0.88 (R5).
In general interior ducts shall be exposed to the rooms and will not be insulated. The heat lost or gained from the un-insulated ducts shall be considered as part of the heating or cooling of the conditioned space.

6.6.2 Diffusers, Registers & Grilles

Diffusers, registers and grilles shall be factory fabricated of steel or aluminum and distribute the specified air quantity evenly over the space intended. The devices shall be round, half round, square, rectangular, linear, or with perforated face as determined by the design. Units will be mounted in ceilings, high sidewalls, or directly to ductwork and shall be sized for the airflow to be delivered with a maximum NC rating of 35. Pressure loss through the diffuser shall be considered in sizing the duct system and the system static pressure calculations.

6.6.3 Branch Take-offs

Air extractors or 45° entry corners shall be provided at all branch duct take-offs. Manual volume control dampers shall be included at the branch duct take-offs and where required to facilitate air balancing and shall be shown on the design drawings.

6.6.4 Wall Penetrations

Building wall penetrations shall be carefully made so as not to deteriorate the structural integrity of the wall system. The Contractor shall consult with the building manufacturer, if possible, to determine the best way to penetrate the wall. If the building manufacturer is not available, a structural engineer shall be consulted. In either case, the recommendations of the engineer shall be strictly adhered to. Piping penetrating through walls shall be provided with pipe sleeves embedded in the wall. The annular space between the pipe and pipe sleeve shall be filled with back stop material and sealed to prevent any moisture migration.

6.6.5 Air Filtration

All supply air shall be filtered using manufacturer's standard washable filters mounted inside the unit. In addition, all outdoor air intakes shall be equipped with 50 mm (2 inch) thick washable filters.

6.6.6 Control Wiring and Protection Devices

Control wiring and protection of the air conditioning units being offered must be the manufacturer's standard, pre-wired, installed in the unit at the factory or as recommended. Thermostats shall be located near the unit return, and shall include lockable housing that allows viewing of settings without permitting access. For units serving more than one area, the thermostat shall be located near the return of the space with the highest heat generation.

6.7 COLD STORAGE WAREHOUSE CLASS I

6.7.1 Shop Drawings

Contractor shall provide the Contracting Officer shop drawings for approval of appropriately sized walk-in coolers and freezers to include proposed manufacturer, construction details, manufacturer's instructions, evacuation and charging procedures, operation and maintenance date, start-up and initial operational tests.

6.7.2 Modular Construction

Walk-in coolers and freezers shall be panel type modular construction. Doors shall swing out. Condenser unit shall be remotely located at the exterior of the units and the evaporator shall be mounted inside of the unit. Provide a temperature/ alarm system. Provide interior lighting with exterior switch. Floors of cool rooms shall be insulated panelized construction from the manufacturer of the cool rooms. The concrete floor will not be depressed.

6.7.3 Piping

Refrigeration piping shall be annealed or hard drawn seamless copper tubing in conformance with ASTM B280. Refrigeration systems shall be remote type.

6.7.4 Electrical

Electrical characteristics shall match local power 380v/3ph/50Hz and 220v/1ph/50Hz.

6.7.5 Packing Material

Preservation and packing shall be commercial grade.

6.7.6 Temperature Record & Control

Provide a recording thermometer. Provide temperature alarm with connector to remote temperature alarm.

6.7.8 Outdoor Condensing Unit

Provide outdoor condensing unit cover and security fence or wall to protect outside units. Provide condensing unit outdoor controls for operation down to –18 degrees C ambient temperature.

6.7.9 Refrigeration Equipment

Refrigeration equipment shall be designed for remote installation. Design units for 16 to 18 hour operation at the indicated interior temperature in –18 degree C ambient temperature. Capacities, air delivery, and dimensions shall be as indicated. Remote condensing units shall be factory fabricated and rated in accordance with UL303 and ARI 365. Provide with motor, air cooled condenser, receiver, compressors, mounted on a common base. Compressors shall be hermetic type. Evaporators shall be factory fabricated and rated in accordance with UL 412 and ARI 420. Forced convection, unit cooler type, made to suspend from the ceiling panels, with forced air discharged parallel to the ceiling. Provide with air circulating motor, multi-fin tube type coil and grille assembled within a protective housing. Air circulation motors shall be lifetime sealed, and the entire unit-cooler assembly shall be accessible for cleaning. Provide a drip pan and drain connection. When the cold storage room is used for freezing, provide an automatic electric heat defrosting system. Provide a timer type defrost controllers.

6.7.9 Drain Lines

Provide condensate drain lines and drains below freezer floors with electric heating cable, thermostatically controlled to maintain 10 degrees C at zero flow rate. Heating cable shall be sized in accordance with manufacturer’s recommendations.

6.7.11 Installation Instructions

Submit a copy of installation instructions to the Contracting Officer covering both assembly and installation of the refrigeration equipment prior to start of work

6.7.12 Testing

Start up and initially operate the systems upon completion of the installation of the equipment and refrigerant piping. Adjust the safety and automatic controls to place them in operating sequence. Record manufacturer's recommended readings hourly. Operational test shall cover a period of not less than 24 hours. Upon completion of Operational test the systems shall be performance tested. Test duration shall not be less than 8 hours. Test shall include the following information to be in the report with conclusions regarding the adequacy of the systems:

Time, dates and duration of tests:

- Inside dry-bulb and wet-bulb temperatures maintained in each room during the tests employing recording instruments calibrated before the tests.
- Outside dry-bulb and wet-bulb temperatures obtained from recording instruments calibrated and checked hourly with a sling psychrometer.
- Evaporator and condenser entering and leaving temperatures taken hourly with the compressors in operation.
- The make, model, and capacity of each evaporator and condensing unit.
- Voltmeter and ammeter readings for condensing units and evaporators.

6.7.13 Operations & Maintenance

Provide chart showing the layout of the refrigeration systems, including piping, valves, wiring, and control mechanisms. Submit printed instructions covering the maintenance and operation of refrigeration equipment. Tag shutoff valves in accordance with the instructions. Provide any special tools necessary for repair and maintenance of the systems.

Upon completion of the work and at a time designated by the Contracting Officer, provide instruction to designated personnel in the operation and maintenance of each refrigeration system. The period of instruction shall not be less than one 8-hour day.

6.7.14 Clean-up

Remove any packing material. Wash and clean floors, walls, ceilings and equipment inside of cool rooms. Wash and clean exposed surfaces on outside.

6.8 VENTILATION AND EXHAUST SYSTEMS

All fans shall be used for building ventilation and pressurization with capacities to be selected for minimum noise level generated. Unit mounted fans either used for supply or exhaust shall be centrifugal forward curved, backward inclined, or airfoil fans with non-overloading characteristics of high efficiency and quiet running design. The fans shall be of the heavy-duty type with durable construction and proved performance in a desert environment. Each exhaust fan shall be provided with motorized or gravity dampers which close automatically when the fan is not running. Also, each fan shall be complete with vibration isolator, external lubricators, and all accessories and sound attenuators as necessary.

Supply intake openings shall be provided with motorized dampers which are interlocked with the exhaust fan. The dampers open or close when the exhaust fan is on or off respectively. Maintenance shops and similar spaces that use solvents and oils shall be provided with mechanical exhaust air systems. Exhaust fans shall be centrifugal wall mounted type. Intake openings shall be provided with motorized dampers which are interlocked with the exhaust fans. Provide minimum of 16 ACH. The systems shall consist of centrifugal fan, ductwork, exhaust grills, and interlock controls.

Comply with Industrial Ventilation UFC 3-410-04N.
Toilet and Wash Area: Minimum exhaust ventilation shall be the larger of 35 m3/h / m2 floor or 85 m3/h / toilet (WC). At extreme cold in winter these values can be reduced for short periods to 10 m3/h / m2 or 40 m3/h / toilet (WC) to conserve heat.

6.8.2 Submittals

The Contractor shall submit the following for the equipment to be provided under this section of the specification: manufacturer's data including performance characteristics at design conditions; catalog cuts showing dimensions, performance data, electrical requirements, compliance with standards as stated in paragraph CODES, STANDARDS AND REGULATIONS; drawings indicating location and installation details.

6.9 ELECTRIC HEATERS

6.9.1 Unit Heater

Electric resistance heaters shall be installed in small spaces where only heating is required. Provide a self-contained electric heating unit, suspended from ceiling or structure, with fan and heating elements. Provide control-circuit terminals and single source of power supply with disconnect. Heating wire element shall be nickel chromium. Include limit controls for overheat protection of heaters. Provide tamper resistant integral thermostat.

6.9.2 Cabinet Heater

Cabinet heaters shall be installed in small spaces where only heating is required. Provide a self-contained electric heating unit, surface mounted on wall or structure, with fan and heating elements. Preferred location is directly under the window and centered on the wall. Provide control-circuit terminals and single source of power supply with disconnect. Heating wire element shall be nickel chromium. Include limit controls for overheat protection of heaters. Provide tamper resistant integral thermostat.

6.9.3 Infrared Heaters

Infrared heaters shall be provided for spot heating of a large area such as maintenance bays and warehouses. Infrared heaters shall use electricity or propane fuel. Contractor shall determine which system is the most cost effective. Position the infrared heaters to direct the radiant heat to only those areas where people normally work. Coordinate with User. Provide control-circuit terminals and single source of power supply with disconnect.

6.9.4 Submittals

The Contractor shall submit the following for the equipment to be provided under this section of the specification: manufacturer's data including performance characteristics at design conditions; manufacturer's certificate stating that each unit will perform to the conditions stated, catalog cuts showing dimensions, performance data, electrical requirements, compliance with standards as stated in paragraph CODES, STANDARDS AND REGULATIONS; complete shop drawings indicating location and installation details.
The manufacturer shall also submit a 2 year warranty for each of the units.

6.10 TEST ON COMPLETION

6.10.1 After completion of the work, the Contractor shall
demonstrate to the Contracting Officer that the installation is adjusted and regulated correctly to fulfill the function for which it has been designed. The Contractor shall test, adjust, balance and regulate the section or sections of concern as necessary until the required conditions are obtained. Operational test

shall be conducted once during the winter and once during the summer. Coordinate with the Contracting Officer on when the test shall be scheduled. Include tests for all interlocks, safety cutouts and other protective device to ensure correct functioning. All such tests shall be carried out and full records of the values obtained shall be prepared along with the final settings and submitted to the Contracting Officer in writing.

6.10.2 The following tests and readings shall be made
by the Contractor in the presence of the Contracting Officer and all results shall be recorded and submitted in a tabulated form.

a. Ambient DB and WB temperatures
b. Room Inside Conditions:
    1. Inside room DB & WB temperatures
    2. Air flow supply, return and/or exhaust
    3. Plot all temperatures on psychrometric chart
c. Air Handling Equipment: Air quantities shall be obtained by anemometer readings and all necessary adjustments shall be made to obtain the specified quantities of air indicated at each inlet and outlet.
    Following readings shall be made:
    1. Supply, return and outside air CMH (CFM) supplied by each air conditioning system.
    2. Total CMH (CFM) exhausted by each exhaust fan
    3. Motor speed, fan speed and input ampere reading for each fan
    4. Supply, return and outside air temperature for each air-conditioning system.
d. Electric Motors:
    For each motor: (1) Speed in RPM
    (2) Amperes for each phase
    (3) Power input in KW

6.11 ELECTRICAL REQUIREMENTS FOR HVAC EQUIPMENT

(a) Note that electrical requirements for all HVAC systems shall be designed and installed to operate on the secondary power standard required herein. The existing power distribution system may require modifications or upgrades to support the additional power required by the HVAC unit. The Contractor is responsible to field verify all the conditions and provide complete shop drawings showing any incidental power upgrades. All electrical work shall comply with the National Electric Code.

(b) All thermostats shall be wall mounted near the return grilles in the room with the highest heat load generation and mounted 1.5 meters (5 feet) above the floor. In lieu of a thermostat, a temperature sensor may be located in the same location or in the return duct and connected to a thermostat located near the unit return. Thermostat shall be mounted 1.5 meters (5 feet) above the finished floor and be easily accessible. Thermostats for the latrine facilities shall be located near the unit return and mounted 1.5 meters (5 feet) above the finished floor. Operation of the control system shall be at the manufacturer's standard voltage for the unit.

(c) The following are the minimum requirements for motors regarding enclosure, insulation and protection:

1. Compressor Hermetic: Provide inherent (internal) overload protection.
2. Condenser: Provide internal thermal overload protection.
3. Evaporator (Open Class "A") fan motor type provides internal thermal overload protection.

6.15 OPERATIONS AND MAINTENANCE (O&M) FOR MECHANICAL

(a) Contractor is required to provide a 12 month supply of parts for operation and maintenance of equipment according to the manufacturer's recommendations. In addition to this, the contractors

shall provide an inventory of all items, location/address stored and secured, and commissioning plans.

(b) The O&M manuals must be provided prior to any training activities. Manuals shall be “tri-lingual” in Dari, Pashto and English.

(c) All control panels shall have tri-lingual name plates in Dari, Pashto and English.

(d) The contractor shall provide an outline of the training lesson plan (to be approved by the Government) prior to conducting training. CD recordings of training on video shall also be provided, after training is conducted.

7.0 PLUMBING

7.1 SCOPE OF WORK.

7.1.1 General

The Contractor shall design and build domestic cold and hot water systems, waste, drain and vent systems, waste-oil collection and storage and fuel-oil storage and distribution systems required in the facilities identified in Section 1010 Scope of Work and as described herein. The Contractor shall also be responsible for complete design and construction of all domestic and special plumbing systems required for full and safe operations in the Generator Plant, Water Storage and other facility or structures required in this contract.

The work covered in this scope also includes the delivery to site, erection, setting to work, adjusting, testing and balancing and handing over in full operating condition all of the plumbing equipment and associated plumbing works.

7.1.2 Sub-Contractors Qualifications

The plumbing systems shall be executed by a plumbing specialist subcontractor experienced in the design and construction of these types of systems.

7.1.3 Standard Products

All materials and equipment shall be standard product of a manufacturer regularly engaged in the manufacture of the product and shall duplicate items that have been in satisfactory use for at least two (2) years prior to bid opening.

7.2 CODES, STANDARDS AND REGULATIONS

The design and installation of equipment, materials and work covered under the plumbing services shall conform to the following standards, codes and regulations where applicable except where otherwise indicated under particular clause(s). The publications to be taken into consideration shall be those of the most recent editions. Standards other than those mentioned herein may be accepted provided that the standards chosen are internationally recognized and meet the minimum requirements of the specified standards. The Contractor shall submit proof of equivalency if requested by the Contracting Officer.

IPC – International Plumbing Code

NFPA - National Fire Protection Association

ASHRAE – American Society of Heating, Refrigeration and Air-Conditioning Engineers

ASME – American Society of Mechanical Engineers

ASTM – American Society for Testing and Materials

AWS – American Welding Society

7.3 PLUMBING SYSTEMS REQUIREMENTS

7.3.1 Water

Domestic cold and hot water shall be provided in the facilities to serve the water usage and plumbing fixtures provided for the facility. Water service to each facility shall enter the building in a mechanical, toilet, storage, or similar type space. The building service line shall be provided with a shut off valve installed either outside in a valve pit or inside the mechanical room or similar spaces. Water piping shall not be installed in or under the concrete foundation. All water piping shall be routed parallel to the building lines and concealed in all finished areas. Insulation shall be provided where required to control sweating of pipes or to provide protection from freezing.

7.3.2 Piping Materials

Domestic water shall be distributed by means of standard weight (schedule 40) galvanized steel pipe, Polyethylene (PE) plastic pipe (schedule 40 or 80). Waste and vent piping can be made of either galvanized steel pipe (schedule 40), or Polyvinyl Vinyl Chloride (PVC) conforming to ASTM D 2665. Corrosion protection shall be provided if galvanized piping comes in contact with earth or masonry floors, walls or ceilings.

7.3.3 Plumbing Fixtures

The following typical plumbing fixtures shall be provided:

a. Western Style Water Closet with flush tank assembly. Provide vitreous china, siphon jet, floor mounted, floor outlet water closet. The water closet shall be furnished with solid plastic round closed-front seat with cover. Provide wax bowl ring including plastic sleeve. Provide dual flush toilet with second flushing option that shall not exceed 4.1 liters (1.1 gallons) per flush

b. Lavatories. Enameled cast iron, wall or counter mounted. Chrome plated brass fittings provided for water supplies.

c. Sink Faucets. Faucets shall be chrome plated brass material with individual knobs for hot and cold. No goose neck faucet fixtures shall be used.

d. Shower. Showerhead and faucet handles shall be chrome plated brass material. Provide for manual mixing with hot and cold water valves. In addition to a shower head (mounted at 2.0 meter AFF), provide each shower stall with a threaded faucet approximately 1.2 m AFF with hot and cold-water controls, mixing valve and a diverter type valve so water can be directed to either the shower or to the lower faucet. Shower shall be provided with low flow shower head. The shower head shall be heavy duty type and securely fastened to the wall.

e. Service Sink. Standard trap type, enameled cast iron. Service sinks provided in maintenance areas shall be metallic, and in battery rooms acid resistant.

f. Floor Sink (Janitor Sink). Provide floor sink, circular or square, with 300mm overall width or diameter and 250mm nominal overall depth. They shall have acid resistant enamel interior with cast iron body, aluminum sediment bucket and perforated grate of cast iron. Outlet size as indicated on plans.

g. Floor or Shower Drain: Cast iron construction with galvanized body, integral seepage pan, and adjustable perforated or slotted chromium plated bronze, nickel-bronze, or nickel brass strainer consisting of a grate and threaded collar. Toilet room floor drains are similar except are provided with built-in, solid, hinged grate.

h. Provide P-Traps per International Plumbing Code IPC for all fixture drains, floor and trench drains, and shower drains. P-traps shall have minimum of 50 mm water seal.

7.3.4 Hot Water

Hot water shall be provided for the facility to supply 49°C (120°F) hot water to fixtures and outlets requiring hot water. Hot water of a higher temperature shall be provided only where required for special use or process. Hot water piping shall be routed parallel to the building lines and concealed within finished rooms. All hot water piping shall be insulated. A hot water re-circulating pump shall be provided if hot water piping run exceeds 30m.

7.3.5 Hot Water Heaters

The hot water shall be generated by electric water heaters). The unit(s) shall be typically located inside a mechanical room, storage room, toilet/janitor room or similar type space. The unit(s) shall be of the commercially available tank type having low or medium watt density electric heating elements.

In cases where the pressure of the water coming into the tank will violate manufacturer recommendations, a pressure reducer shall be installed in the line before the water heater. Also, all water heaters shall be equipped with a blow-off valve that will empty into a nearby floor drain or to the exterior of the building.

7.4 WASTE, DRAIN AND VENT SYSTEM

Floor drains shall be provided in each room that contains a water source. Floor drains shall be provided in the mechanical equipment and toilet rooms as required. Floor drains shall be provided next to the electric water heaters. In mechanical rooms, floor drains shall be provided to avoid running drain piping long distances above or over the floor. Every trap and trapped fixture shall be vented in accordance with the IPC.

7.5 TESTING AND COMMISSIONING

The Contractor shall test all piping systems in accordance with IPC International Plumbing Code. The final test shall include a smoke test for drainage and vent system and pressure test for the domestic water piping. After completing the work, the Contractor shall demonstrate that all plumbing systems operate to fully satisfy the function for which these systems have been designed. The Contractor shall test, adjust, balance and regulate the system and its controls as necessary until the required designed conditions are met. The Contractor shall include tests for interlocks, safety cutouts and other protective devices to demonstrate safe operation. All such tests shall be carried out in the presence of the Contracting Officer and full written records of the test data and final settings shall be submitted to the Contracting Officer. After all tests are complete, the entire domestic hot and cold water distribution system shall be disinfected. The system shall not be accepted until satisfactory bacteriological results have been obtained.

8.0 FIRE PROTECTION

8.1 GENERAL

Facility construction and fire protection systems shall be installed in accordance with the publications listed herein and the publications referenced therein. Where a conflict occurs among various criteria, the

more stringent requirement shall take precedence.

8.2 BUILDING CONSTRUCTION

Building construction shall conform to fire resistance requirements, allowable floor area, building height limitations and building separation distance requirements of the building code.

8.3 LIFE SAFETY

Facilities features will be provided in accordance with NFPA 101, among other references, to assure protection of occupants from fire or similar emergencies.

8.4 FIRE PROTECTION EQUIPMENT

All fire protection equipment shall be listed by Underwriters' Laboratories (UL) or approved by Factory Mutual (FM) or equivalent and shall be listed in the current UL Fire Protection Equipment Directory or Factory Mutual Approval Guide or equivalent.

8.5 FIRE DETECTION AND ALARM SYSTEM

Smoke detection – see electrical section for more fire alarm and detection details. Alarm systems with manual and/or automatic activation and notification devices shall be installed only where required by NFPA 72, NFPA 101, IBC, or UFC 3-600-01. Required fire detection and alarm systems shall be designed and installed in accordance with NFPA 72, NFPA 101, UFC, and IBC. All alarm and sprinkler systems shall be monitored by a system compatible with the existing base alarm receiving system.

8.6 WATER SUPPLY FOR FIRE PROTECTION

A dedicated fire protection water supply is unavailable for the Class I Warehouse and Entry Control Point project sites. Therefore, alternate methods of design and construction are being instituted. The RSOI Barracks, MWR/Admin/Training and Class I Cold Storage Warehouse facilities do require sprinkler protection (wet pipe type) and a dedicated water tank for sprinkler operation must be designed and constructed per the UFC 3-600-01 requirements. It is assumed that the base water system is not reliable for a wet pipe system; thus the contractor must size the water supply tank for the sprinklers with sufficient quantity as prescribed in the NFPA 13 reference.

8.7 PORTABLE FIRE EXTINGUISHERS

Portable fire extinguishers shall be provided inside all facilities and at exterior locations as required in accordance with NFPA 10. Generally, extinguishers will be of the multi-purpose dry chemical type except for occupancies requiring a special type extinguisher (e.g., carbon dioxide portable fire extinguishers for electrical rooms).

9.0 ELECTRICAL

9.1 GENERAL

Contractor shall design and construct all electrical systems for the facilities to be provided. This includes design, construction, all necessary labor, equipment, and material for a fully functional system. All electrical work to be performed by the Contractor shall be directly supervised by an experience and licensed master electrician. Proposed individuals shall have a valid and current master electrician license or foreign equivalent (e.g, Master Craftsman's diploma). The license shall be issued by a US licensing authority (i.e. State of Texas, City of New York City), or equivalent foreign licensing authority. The Contractor shall submit resumes and copies of licenses (with licensing requirements) for proposed supervising master electricians to the Contracting Officer for review and concurrence. The US Government reserves the right to reject proposed supervising master electricians; decisions by the USG

reference the acceptability of proposed supervision master electricians are final and not subject to review or appeal. Written rationale for rejection will be provided to the Contractor by the Contracting Officer. Rejected personnel shall not be permitted to work at the site in the capacity of supervising electrician.

All electrical work shall be performed by licensed journeyman electricians. No electrical work shall be performed by the Contractor without a supervising master electrician directly overseeing the work. All electrical work shall be certified in writing as meeting all applicable standards, codes, and contract specifications by the supervising master electrician.

9.2 DESIGN CRITERIA

9.2.1 Applicable Standards

a. Design shall be in the required units as stipulated herein.
b. Conflicts between criteria and/or local standards shall be brought to the attention of the Contracting Officer for resolution. In such instances, all available information shall be furnished to the Contracting Officer for approval.
c. All electrical systems and equipment shall be installed in accordance with the requirements set forth in the documents referenced herein.
d. Acceptance Testing: Contractor shall develop and submit for approval complete acceptance test procedures on all systems provided. As a minimum the testing procedures shall comply with the requirements of the National Fire Protection Association (NFPA) and the International Electrical Testing Association Inc. (NETA).

9.3 MATERIAL

9.3.1 General

Unless noted otherwise, all material used shall be in compliance with the requirements of UL standards. In the event that UL compliant materials are not available, Contractor may then select applicable British Standards (BS), IEC, CE, CSA, GS, DIN listed material (or equivalent), but the contractor must prove equivalence and must provide the government with a full copy of the relevant specification(s)/standard(s). Material and equipment installed under this contract shall be for the appropriate application and installed in accordance with manufacturers recommendations.

Equipment enclosure types shall be in compliance with the National Electrical Manufacturer's Association (NEMA) or the International Electro-Technical Committee (IEC) standards.

Major components of equipment shall have the manufacturer's name, address, type or style, voltage and current rating, and catalog number on a non-corrosive and non-heat sensitive plate, securely attached to the equipment. All equipment delivered and placed in storage, prior to installation, shall be protected from the weather, humidity and temperature variation, dirt and dust, and any other contaminants. All equipment shall be in new condition, undamaged and unused.

9.3.2 Standard Product

All material and equipment shall be a standard product of a manufacturer regularly engaged in the manufacture of the product and shall essentially duplicate items that have been in satisfactory use for at least two (2) years prior to bid opening.

9.3.3 Design Conditions

All equipment shall be rated and designed for the maximum ambient temperature and altitude of the construction site. Equipment that is altitude and temperature sensitive, such as generators, shall be derated according to the manufacturer’s recommendations. Generic derating criteria for altitude and for

ambient temperature may be used to approximate the required size of such equipment during the design phase, but a stipulation shall be placed on the construction plans to adjust the size according to the derating criteria specific to the manufacturer's equipment chosen before the equipment is ordered.

9.3.4 Restrictions

Aluminum conductors shall not be specified or used except as bare steel reinforced (ACSR) overhead conductors in an aerial primary distribution system. Aluminum windings shall not be used in transformers.

9.4 DESIGN REQUIREMENTS

9.4.1 Electrical Distribution System

The contractor shall provide generator power as described in the paragraph **Generator Power System** as a prime source.

The contractor shall provide a prime power distribution system to distribute power to the site's facilities and other loads as required. The distribution system shall be underground.

The underground portion of the distribution system shall be in concrete encased ductbanks with the ducts not less than 1220mm below grade. Manholes and handholes shall be provided at changes of direction of more than 40 degrees and elsewhere as required to limit the pulling tension and sidewall pressure on the cables during installation to acceptable levels as defined by the cable manufacturer. Manholes shall be provided for ductbanks with more than 2 ducts. Handholes shall be provided wherever a manhole is not required by quantity of ducts or by cable manufacturer's installation recommendations. Underground ducts shall be not less than 100mm diameter thin-wall PVC.

The contractor shall provide a power plant sized to contain the required generators and their associated an automatic transfer switch (ATS) and main distribution panel. The contractor shall provide all required conduit stub ups to connect all equipment and the future pad-mounted transformer to the ATS and main distribution panel.

The contractor shall provide a street lighting distribution system to supply power to the site's street lighting circuits. The street lighting system shall be underground in direct buried schedule 40 PVC not less then 27mm in diameter and not less than 660mm below grade. The street lighting ducts shall be concrete encased in areas subject to vehicular traffic, such as road crossings and parking areas.

Secondary electrical distribution system shall be 208/120 volt, 3-phase, 4-wire, 60 hertz. Design of the electrical system within facilities shall include, but is not limited to (a) interior secondary power distribution system, (b) lighting and power branch circuit and devices, and (c) fire detection and alarm system. All systems shall be designed for the ultimate demand loads, plus 25% spare capacity.

The contractor shall provide service entrance feeders from the distribution system to the service entrance equipment located inside of each facility and sized to the rating of the service entrance equipment. Service entrance equipment shall include a distribution panelboard sized to supply the total load of each facility. Service entrance feeder lengths shall be kept as short as possible to minimize voltage drop. They shall be underground not less than 1220mm below grade in concrete encased 102mm minimum thin-wall PVC from an automatic transfer switch. A spare conduit of equal size shall be provided.

All panelboards shall be circuit breaker 'bolt-on' type panels. Minimum size circuit breaker shall be rated at no less than 20-amperes. Circuit breakers shall be connected to bus bar(s) within the panelboards. Daisy chain (breaker-to-breaker) connection(s) are not acceptable. Indoor distribution panels shall be flush mounted in finished areas and surface mounted in unfinished areas. All circuit breakers shall be

labeled with an identification number corresponding to the panel schedule. A 3-pole circuit breaker shall be a single unit and not made up of 3 single pole circuit breakers connected with a wire or bridge to make a 3-pole breaker. All branch circuit wiring shall be copper, minimum #4 mm^2 (#12 AWG) installed in metal conduit. Wiring shall be concealed in finished areas and surface mounted in unfinished areas. Flush mounted panels shall be provided with spare empty conduits from panel to unfinished area for future use. All panels shall be provided with a minimum of 25% spare capacity for future load growth. Power receptacles (outlets) shall be duplex type 120 V, NEMA 5-20R rated for 20A or better and shall be compatible with the required secondary power. All splicing and terminations of wires shall be performed in junction or device boxes. Proper wire nuts/connectors shall be used for splicing wire. No twist-wire connections with electrical tape wrapped around it shall be acceptable. All electrical installation shall be in accordance with NFPA 70 (National Electric Code). For large panels (225 Ampere and above) provide an ammeter, voltmeter and kilowatt-hour meter to monitor energy usage. Selector switches shall be provided for each meter to read all 3 phases. Receptacle locations shall be coordinated with architectural requirements.

Contractor shall design and provide circuits for all mechanical equipment and any other equipment that requires power and make the final connections.

All loads shall be coordinated to provide balanced loading. Phase imbalance at each panel shall not exceed 5%.

Voltage Drop for branch circuits shall be limited to no more than 3%; voltage drop for branch and feeder circuits combined shall be limited to no more than 5%.

All circuit breakers shall use down-stream coordination to ensure the breaker nearest a fault or overload is the first to trip.

9.4.1.1 Generator Power System

The generator power system, whether serving as the backup source of power, shall be configured as an N+1 system with the N representing the number of generators needed to supply the site's total load and the +1 representing the number of additional generators of the same size required as spares. The site's total load is defined as the site's total demand load + 25% spare capacity.

Generators shall be derated as necessary for the ambient temperature and altitude of the site. Each generator shall be provided with an automatic load bank matched to 40% of its rated capacity (with load steps every 20% of the load bank's rating) to prevent the generator from "wet stacking" under low load conditions.

The generator power system shall be provided with a make-before-break, 4-pole, automatic transfer switch (ATS) rated for the capacity of the system. The ATS shall be capable of automatically and manually transferring the site's distribution system to generator power upon loss of local utility power and transferring back automatically and manually to local utility power upon its restoration.

The ATS shall be equipped with synchronizing/paralleling equipment to allow the generators to share the load of the site. When generator power is required at least one (1) generator shall be online at all times. When the site's load reaches 90% of the online generator's capacity, the standby generator(s) shall start. The generator that synchronizes first shall come online and share the load equally. When the site's load drops below 80% of the online generators' combined capacity, the generator(s) shall drop off line, one at a time, keeping a minimum of one generator operating online.

Whenever a generator starts, it shall go through a cool down cycle prior to shutdown. All relaying shall be automatically reset for automatic restart and stopping of generators as the load increases or decreases. Load sharing by the standby generator(s) shall be adjustable between 50% and 95% of the load on the online generator(s). Sequence of operation shall be time clock controlled at smaller sites (2 or 3 generators) and shall be PLC controlled at larger sites. A properly sized main switchboard shall be

provided to distribute the power produced by the generator(s) to the facilities on the site.

9.4.2 Lighting

Design levels shall be per IES standards as a minimum. For convenience, the following lighting level table is listed. Note: all spaces listed below may not be within the work required within this contract.

Living room/Quarters	30 FC (320 Lux)
Toilets, Showers, Latrines, washrooms	20 FC (215 Lux)
Mechanical/Electrical rooms	15 FC (160 Lux)
Corridors and Stairways	10 FC (110 Lux)
Offices (private)	30 FC (320 Lux)
Office areas (open)	50 FC (540 Lux)
ECP work spaces (all)	50 FC (540 Lux)
ECP Guard Stations	30 FC (320 Lux)
Auditoriums (assembly)	20 FC (220 Lux)
Conference	30 FC (320 Lux)
All MWR facilities	50 FC (540 Lux)
Warehouse areas	30 FC (320 Lux)
Egress path (incl. exterior)	1 FC (10 Lux)
Areas adjacent to egress path	0.05 FC (0.5 Lux)

FC = FootCandle

Indoor lighting for all areas shall consist of fluorescent surface mounted light fixtures. Exterior lighting shall be HID (metal halide or high pressure sodium) as referenced. Moisture resistant/waterproof fluorescent light fixtures shall be provided in high humidity and wet areas such as latrines, showers and outside. Battery powered ‘emergency’ and ‘exit’ lights shall be provided within each building, as applicable, for safe egress during a power outage. All light fixtures shall be factory finished, complete and operational, to include but not be limited to, lens, globe, lamp, ballast etc. Industrial type fluorescent light fixtures shall not be used. Every room shall be provided with a minimum of one light switch. Light fixtures shall be mounted approximately 2.5-meters (8 feet) to 3.0 meters (10 feet) above finished floor (AFF) minimum unless a high ceiling facility such as a warehouse. Fixtures may be pendant or ceiling mounted, depending on the ceiling type and height. No street lighting is required for these facilities: only building security lighting is permitted.

9.4.3 Light Fixtures

Lighting fixtures shall be a standard manufacturer’s product. Fluorescent surface mounted light fixtures shall be power factor corrected and equipped with standard electronic ballast(s), except in medical facilities where magnetic ballast(s) shall be required. All light fixtures shall properly operate using standard lamps available locally. Fixtures shall be fully factory wired and designed for appropriate application i.e. appropriate for that location where installed.

9.4.4 Emergency “EXIT” Light Fixtures

Emergency “EXIT” light fixture shall be provided in accordance with NFPA requirements. Fixtures shall be single or double sided as required by the location and for wall/ceiling mounting. Unit shall illuminate continuously and be provided with self-contained nickel cadmium battery pack, to operate on floated-battery or trickle charge circuit. Fixture shall operate satisfactorily for 90 minutes during a power outage. Unit shall have test/re-set button and failure indication lamp. Primary operating voltage shall be 120 volts. Lettering “EXIT” shall be color red and not less than 6 inches (150 mm) in height and on matte white background. Illuminations shall be with LEDs.

9.4.5 Above Mirror Lights

Above mirror lights shall be provided in toilet rooms.

9.4.6 Emergency Lighting

Battery powered emergency lights shall be provided within each building per NFPA for safe egress during power outage. Fixtures shall be provided with self-contained nickel cadmium battery pack to operate on stand-by circuit for 90-minute minimum. Unit shall have test/re-set button and failure indication lamp. Normal operating voltage shall be 120 volts. Emergency lighting fixtures shall be connected to the normal lighting system.

9.4.7 Light Switches

Light switch shall be single pole. Minimum of one light switch shall be provided in every room. Lighting in large rooms/areas may be controlled from multiple switches. Three-way or four-way lighting shall be provided in all rooms / areas with multiple entrances.

9.4.8 Receptacles

General-purpose receptacles shall be as required herein. All receptacles shall be duplex, unless otherwise specified in this section, the NEC, or other referenced standard.

Receptacles shall be placed at a maximum of 3-meter (10 feet) intervals. Areas with computer work-stations or similar equipment will have additional receptacles. Sinks will have a receptacle above, with one duplex receptacle serving two sinks that are side-by-side. Receptacles in wet/damp areas or within 1 meter (~3 feet) of sinks, lavatories, or wash-down areas shall be ground fault circuit interrupter (GFCI) type or residual current disconnect (RCD) type, with the trip setting of 10 milliamperes or less. Total number of duplex receptacles shall be limited to six (6) per 20-ampere circuit breaker.

For the RSOI barracks, locate duplex receptacles on all walls, at 2500 mm intervals.
For the MWR facility, locate duplex receptacles on all walls, at 2500 mm intervals
For the existing RSOI admin bldgs, use the existing receptacles.
For the Class I warehouse admin areas, locate receptacles on all walls, at 2500 mm intervals,
For the Class I warehouse facility, locate receptacles at the entrances and as required by the refrigeration storage areas.
For the ECP facilities, locate two duplex at each guard house, two for each work station in the search and biometric buildings, two per workstation in the admin bldg, two for the kennels (GFCI rated), as directed by the contracting officer for the Scanner building, one waterproof for each waiting shelter.

9.4.9 Conductors

All cable and wire conductors shall be copper. Conductor jacket or insulation shall be color coded to satisfy NEC requirements. Phase conductors - Phase A Black; Phase B Red; Phase C Blue; Neutral and grounded conductors as per code requirements The use of 75 or 90 degree C (minimum) terminals and insulated conductors is required. Use of higher degree C rated conductors on circuits with protective device terminals rated at a lower degree C is allowed but must be derated to the rating of the device terminals.

9.4.10 Grounding and Bonding

Grounding and bonding shall comply with the requirements of NFPA 70. Underground connections shall be exothermally welded. All exposed non-current carrying metallic parts of electrical equipment in the electrical system shall be grounded. Insulated grounding conductor (separate from the electrical system neutral conductor) shall be installed in all feeder and branch circuit raceways. Grounding conductor shall be green-colored, unless the local authority requires a different color-coded conductor. Ground rods shall be 20 millimeters (0.75 inches) in diameter and 3 meters (~10 feet) long made of copper-clad steel. Final measurement of the ground resistance shall be in compliance with the requirements of the local

authority but shall not exceed 25 ohms when measured more than 48 hours after rainfall.

9.4.11 Enclosures

Enclosures for exterior and interior applications shall be NEMA Type 3S (IEC Classification IP54) and NEMA Type 1 (IEC Classification IP10) respectively.

9.4.12 Fire Detection & Alarm System

A Fire Detection and Alarm System shall be provided throughout the buildings only when and where required by NFPA 72, NFPA 101, IBC, or UFC and shall be installed in accordance with the requirements of those standards. System shall include, but not be limited to, a Fire Alarm Control Panel (FACP) with required battery backup, remote annunciator, manual pull stations, horns, strobes, and smoke and/or heat detectors (with alarm verification feature). The system shall be capable of automatically transmitting the alarm signal to the local fire department/fire station or other location designated by the Contracting Officer via a method compatible with the existing base system. Fire alarm system shall be complete and a standard product of one manufacturer and shall be compatible with the existing predominant standard system in place at the installation.

9.4.13 Transient Voltage Surge Suppression (TVSS)

Transient Voltage Surge Suppression shall be provided utilizing surge arresters to protect sensitive and critical equipment. As a minimum TVSS protection shall be provided at each panel serving electronic loads and shall be shown on the panel schedule. It is recommended that Metal Oxide Varistors (MOV) technology be used for such applications.

9.4.14 Conduit Raceway System

Metal conduit system shall be complete, to include but not limited to, necessary junction and pull boxes. Smallest conduit size shall be no less than 13mm (0.50 inch) in diameter. All empty conduits shall be furnished with pull wire or cord or rope (depending on the size of conduit and length of run). System design and installation shall be per NFPA 70 requirements. Exterior conductors below grade shall be installed in concrete encased PVC conduit at a depth of 1220 millimeters.

9.4.15 Cable Tray Raceway System

Cable trays shall be ladder type and provided with, but not limited to, splices, end plates, dropouts and miscellaneous hardware. System shall be complete with manufacturer's minimum standard radius and shall be free of burrs and sharp edges. Nominal width of cable tray shall be 300mm (12 inch) and rung spaced at 150mm (6 inch). Nominal depth shall be 103mm (4 inch). System design and installation shall be per NFPA 70 requirements.

9.4.16 Identification Nameplates

Major electrical equipment, such as transformers, panelboards, and load centers, etc. shall be provided with (via screw connections) permanently installed engraved identification nameplates.

9.4.17 Schedules

All panel-boards and load centers shall be provided with a directory installed on the interior access door behind and clear plastic sheet. Directory shall be typed written in English.

9.4.18 Single Line Diagram

Complete single line diagrams shall be provided for all systems installed. All major items in each system shall be identified and labeled for respective ratings. Single line diagrams for each system, installed in a

clear plastic frame, shall be provided and installed with in the same room as the equipment.

9.5 OPERATIONS AND MAINTENANCE (O&M) FOR ELECTRICAL

(a) Contractor is required to provide a 12 month supply of parts for operation and maintenance of equipment according to the manufacturer's recommendations. In addition to this, the contractors shall provide an inventory of all items, location/address stored and secured, and commissioning plans.

(b) The O&M manuals must be provided prior to any training activities. Manuals shall be "tri-lingual" in Dari, Pashto and English.

(c) All control panels shall have tri-lingual name plates in Dari, Pashto and English.

(d) The contractor shall provide an outline of the training lesson plan (to be approved by the Government) prior to conducting training. CD recordings of training on video shall also be provided, after training is conducted.

10.0 COMMUNICATIONS – Telephone and Date Distribution

10.1 GENERAL – Refer to Appendix C for drawings

10.1.2 Communication Systems Design

The communications systems for the ECP, Class 1 and RSOI Facilities at Kandahar Air Field, Afghanistan are to be designed, supplied and constructed by the Contractor. The design and construction of the systems shall be in accordance with the references and the requirements contained herein unless otherwise noted. The design and selection of materials and equipment shall be submitted to the ISEC Engineer at TAC through Contracting Officer for approval. The communication system related submittals including the conduit and fittings, shall be sent to the ISEC Engineer at TAC through the COR for review in lieu of the site office in accordance with AR 25-1 and the MOA between AMC and USACE.

10.2 The contractor shall install a manhole and duct system as described in this narrative. The manholes shall be constructed in accordance with the contact drawings. The maximum distance between manholes/handholes shall not exceed 150 meters. Hand-holes, when used, shall be constructed in accordance with the contract drawings. Manholes shall be equipped with the standard manhole covers as depicted on the drawings and a locking DISA approved secondary lid that fits in the collar under the standard lid. Handholes shall be equipped with a hasp for an external locking capability. The handhole lids shall be dual leaf, and H-20 rated with documentation to verify the H-20 rating. The handhole lids shall be an item manufactured by a firm that normally makes that kind of product.

10.2.1 RSOI Facilities

The Contractor shall install a new manhole and copper cross connect cabinet in the RSOI complex above Motor pool road and connect the manhole with a duct system to the U.S. Army Area Distribution Node (ADN) manhole that is located between Motor Pool Road and Tropic Lightning road. The duct system shall be direct buried PVC conduit in a 2x3 configuration. Two ducts shall be equipped with innerducts. The cross connect cabinet shall be adjacent to the manhole and connect the cabinet to the manhole with six each 100 mm PVC conduits. Conduits from the U.S. Army ADN manhole to the U.S. Army ADN copper cross connect cabinet shall provide a path for copper distribution connection to the RSOI and South Park areas. *Note: Fiber optic connectivity is from the Patch panels in the ADN building whereas copper connectivity is from the cross connect cabinet.*

10.2.1.1 Existing building, MWR/Admin/Training Renovation., The contractor shall install a manhole outside the existing building and install four PVC conduits (two with innerduct) to the downstairs communication room.

10.2.1.2 RSOI (1000 Man Barracks)
The contractor shall install a handhole outside each new building and install two PVC conduits (one with innerduct) to the communications backboard on the first floor.

10.2.2 Class 1 Storage facility
The Class 1 Storage facility will be relocated to the South Park Area between 6th Street and 7th street. The South Park infrastructure project will install a manhole and duct system (NATO) and the Contractor will have to install cables from the U.S ADN between Motor Pool Road and Tropic Lightning road to the Class 1 Storage Facility Office building.
The Contractor shall install a manhole and duct system in the facility to provide service as required. The duct system shall consist of two direct buried conduits, one with innerduct. The Contractor shall connect this manhole and duct system to the NATO system via core drilling and hammer drilling.

10.2.3 ECP
The NATO Infrastructure project will install a manhole and duct system
Along 6th street and this section of the manhole and duct system will be used to house the ECP cables. The Contractor shall install a manhole and duct system in the ECP area and connect it to the NATO manhole and duct system back to the NATO ADN.

10.3 Exterior Conduit

The underground conduit for the manhole and duct system shall be direct buried (1 meter below surface); 110 mm schedule 40, PVC. Conduits shall be equipped with four RUS listed 25mm PVC or PE innerducts or RUS listed multi-duct that has factory installed 1.19 inch PVC conduits. The innerducts shall be installed as indicated in this design narrative. The inner ducts shall be installed in the duct face and secured with properly sized duct plugs which expand to seal the duct if field installed. If multi-ducts are used, the proper fittings shall be used to terminate the innerducts. ABS plastic duct terminators shall be cast into the walls of the manholes and handholes for termination of the conduits. The ducts shall be reinforced concrete encased where a road or taxi way is crossed if installed in a road cut. If the road cannot be cut, the ducts shall be installed by directional boring. The duct shall be listed on the RUS list of materials acceptable for use on RUS projects. Cable racking diagrams (manhole/hand-hole butterflies) shall be provided for all new and existing handholes and manholes that are utilized. The conduit, the conduit fittings (elbows, connectors, couplings etc.) and the solvent cement shall be the same brand. The conduit shall be solvent welded to the terminators. Cable racks with cable hooks, bonding ribbon and braid and all other necessary manhole/handhole hardware shall be installed in accordance with the referenced standards and drawings.

10.4 Exterior Telephone Cable, (OSP)

The Contractor shall install (OSP) copper and fiber optic cable in accordance with this design narrative. The copper cable shall be sized in accordance with the requirements in this design narrative. The OSP cable shall be 24 AWG, RUS PE89 type, foam skin polyolefin, with an outer layer of solid colored polyolefin and a copolymer coated 8 mil aluminum tape shield. The fiber optic cable shall be sized in accordance with the design narrative, and be single mode, RUS PE90 type, with a 6 mil, copolymer coated steel shield. The fiber shall not have any internal splices and have a maximum loss of .4dB/Km at 1310nm and .3dB/Km at 1550nm. The copper and fiber optic cable shall be installed, grounded/bonded, spliced and tested in accordance with RUS standards. 25 pair modules shall be used on copper splices 25 pairs or greater and discrete connectors shall be used on lesser cable splices. The copper splice closures shall be flash tested with nitrogen in accordance with the manufacturer's recommendations. The contractor shall provide encapsulant to encapsulate the closure in the future. The splicing modules/connectors, bonding hardware, splice closures and encapsulant shall be on the RUS list of material acceptable for use on RUS projects, IP 344-2. The fiber optic splice closures shall

be equipped with splice trays that properly hold the fusion splice protectors (stainless steel rod with heat shrink tube). The fiber optic splice closure shall be shall be flash tested with nitrogen in accordance with the manufacturer's recommendations and also be listed in RUS IP 344-2. All bonding hardware shall also be listed in RUS IP 344-2. The outside plant cable (cable size and cable counts) shall be engineered and installed in accordance with the referenced standards. The OSP cable Engineering shall be approved by the ISEC Engineer at TAC or Fort Detrick (through the COR) before any cable is ordered or work is started.

10. Cable Entrance

10.5.1 Copper, Protected Entrance Terminals (PETs)

The Contractor shall install PETs in the communications room where the OSP cable enters the buildings or directly above the incoming conduits below the communications backboard. The PET shall be sized to terminate and protect all incoming outside plant pairs. All PETs above 12 pair (and preferably those below also) shall be constructed in a manner that prevents circuit completion unless a gas tube module is installed. The PETs shall be equipped with heavy duty gas tube protectors. The PETs shall be on the RUS list of material, (Publication IP 344-2). All PETs above 12 pairs shall be equipped with factory installed punch down blocks to terminate the incoming cable. The output from the protector fields shall be connected to factory installed punch down blocks on all PETs greater than 12 pairs. The Contractor shall mount a category 6, 110 blocks beside the PET block and cross connect all outside plant cables to that "subscriber PET block".

10.5.2 Fiber Optic Cable

The fiber optic cable shall be terminated in rack mounted combination unit that shall allow splicing and patching within the same enclosure. The outside plant fiber cable shall be fusion spliced to a single mode fiber pigtails equipped with a factory terminated SC connector. The fusion splices shall be protected by a steel rod and heat shrink tube. The single mode pigtails shall have an insertion loss of <.35dB and a return loss of better than -55dB. The maximum allowable fusion splice loss as measured by the splicing machine shall be .02dB and .3dB as measured by an OTDR. The fiber optic connectors shall be SC type. One factory manufactured single mode fiber optic patch cord, SC-SC, shall be provided per patch panel port. The patch cord shall have a mated pair insertion loss of <.35dB and a mated pair return loss of <-55dB.

10.6 Inside Plant Cable and Outlets

10.6.1 Voice/Data Outlets

The contractor shall install the inside plant cable and outlets. The subscriber cable and data cable shall be minimum 24 AWG, category 6 un-shielded twisted pair (UTP) for voice and data. The telephone/data outlets shall be RJ 45, T568A configuration category 6, UTP module type that snap into the wall plate. The standard outlet configuration shall be a quad plex plate with one voice and one data outlet with the other ports provided with a blank filler plates. The voice cable shall have a gray jacket and the data cable shall have a green jacket. The Contractor shall install a 20 ampere, 120Vac, 60 Hz outlet adjacent to each voice/data outlet.

10.6.2 Wall Phone Outlets

Outlets for wall phones (wall phone outlets) shall be stainless steel wall plates (for the keystone type modules) with phone mounting studs. This outlet module shall be, RJ45, category 6 and shall be the same module as is the one in the voice/data outlet configuration. Provide one wall outlet with telephone mounted close to the door for each communications and utility room. Where wall outlets are required to be weather proof, a NEMA 4 enclosure with integral wall phone jack shall be installed.

10.6.3 SIPR net Outlets

The contractor shall install the SIPR net cable plant and outlets. The SIPR net cable shall be minimum 24 AWG; category 6 shielded twisted pair (STP). The SIPR net outlets shall be RJ 45, T568A configuration category 6, STP module type that snap into the wall plate. The standard outlet configuration shall be a duplex plate with two SIPR net outlets in a DISA approved lock box. The SIPR cable shall have a red jacket. The Contractor shall install a 20 ampere, 120Vac, 60 Hz outlet adjacent to each SIPR net outlet box.

10.6.3 Coax Outlets/Cable

The coax outlets shall consist of a duplex plate, one keystone F type coax connector and one blank filler plate. The Coax cable shall be RG6 with an 18 awg solid copper conductor, and dual shield, (aluminum foil 100%coverage, tinned copper 65%), with a nominal attenuation of .3 dB/100 ft. at 1 Mhz, 2.1 dB/100 ft. at 100 Mhz, 3.1 dB/100 ft. at 200 Mhz, 4.5 dB/100 ft. at 400 Mhz, 6 dB/100 ft. at 700 Mhz, 6.9 dB/100 ft. at 900 Mhz and 7.3 at 1000 Mhz. The Contractor shall install a 20 ampere, 120Vac, 60 Hz outlet adjacent to each voice/data outlet.

10.6.4 Power pole outlets, (open office areas).
Power poles shall be installed in open office areas that will have more than 4 desks. The power poles shall have dual raceways for power and communications and be equipped with two standard voice/data outlets with duplex electrical outlets per every 48 square ft. of open office space.

10.6.5 Printer outlets. There shall be a minimum of one voice/data outlet installed per every 5 outlets installed in the offices areas for printer connections. At minimum, one printer outlet shall be installed per building with communications requirements. The COR shall indicate the location of the outlets.

10.6.6 Outlet Boxes

All telecom and cable television outlets shall be mounted in 119mm steel square boxes, 54mm deep with the proper steel extension/plaster rings to bring the box flush with the wall. SIPR net boxes shall be DISA approved for use on SIPR net systems.

10.6.7 Copper Riser Cable, (Between Communication Rooms)

The copper riser cable shall have a fire-retardant PVC jacket and be CMR rated. The Cable shall have solid, soft bare copper, 22 awg
Conductors insulated with foam polyethylene and a PVC skin. The cable shall be a minimum of 100 pair and the conductor colors shall meet the standard PIC color code. The cable shall have an outer Alvyn sheath and an 8 mil aluminum tape bonded to the Gray PVC outer jacket. The riser cable shall be installed in accordance with the NEC. The copper riser cables shall be terminated in all communications rooms on a factory manufactured category 6, 110 type cross connect distribution frame. The frame shall have a metal back frame with wiring blocks, connecting blocks, cable management troughs, designation strips and all other hardware necessary to make a neat and orderly installation. The Contractor shall install a cross connect (jumper) between the voice block and the riser block to provide a path to the entrance blocks for cross connection to the outside plant.

10.6.8 Fiber Optic Riser Cable (Between Communications Rooms)

The Contractor shall install a 12 strand 50 micron multimode fiber optic cable between the ground floor and first floor communications rooms. The multimode cable shall have a maximum loss of 3.5dB at 850nm and 1.5dB at 1300 dB and a guaranteed 1GBS Ethernet supportable distance of 300 meters @850nm and 1000 meters at 1300nm. The riser cable shall be installed in accordance with the NEC. The fiber optic riser cables shall be terminated in a wall mounted combination unit (splicing and patching) to factory manufactured 50 micron multimode fiber optic pigtails (connectors on one end, bare fiber on the other), via fusion splicing. The maximum splice loss shall be .02dB as measured by the

splicing machine and .2 dB as measured by an OTDR. The fiber optic connectors shall be the same type/brand connectorized Duplex SC panel units as is in the OSP section. Provide twelve (12) each patch cords SC-SC for each patch panel. The length shall be as necessary to connect the patch panel portion of the combination unit to the data equipment in the relay racks. The Pigtails shall have a maximum insertion loss of <.5dB and a return loss of better than -25dB. The patch cords shall have a mated pair insertion loss of <.35dB.

10.6.9 Coax, Riser

The Coax cable shall be RG6 with an 18 awg solid copper conductor, and dual shield, (aluminum foil 100%coverage, tinned copper 65%), with a nominal attenuation of .3 dB/100 ft. at 1 Mhz, 2.1 dB/100 ft. at 100 Mhz, 3.1 dB/100 ft. at 200 Mhz, 4.5 dB/100 ft. at 400 Mhz, 6 dB/100 ft. at 700 Mhz, 6.9 dB/100 ft. at 900 Mhz and 7.3 at 1000 Mhz. The riser cable shall be installed in accordance with the NEC. The coax riser cables shall be terminated on a wall mounted patch panel. The patch panel shall be mounted on a swing down bracket. Provide one factory manufactured patch cord, Type F male-Type F male for each patch panel port.

10.7 Telephone Number Assignments

The contractor shall provide all information necessary to allow the base telephone office personnel to connect dial tone to buildings.

10.8 Data Patch Panels

The contractor shall terminate data cables (from the data outlets) on a rack mounted, category 6, ANSI TIA/EIA T568A configuration UTP patch panel. The largest size patch panel shall be 48 port and the smallest shall be 24 port. One factory manufactured Category 6 rated UTP patch cord shall be provided per patch port.

10.9 Voice Patch Panels

The contractor shall terminate voice cables (from the voice outlets) on rack mounted, category 6, ANSI TIA/EIA T568A configuration UTP patch panels. The largest size patch panel shall be 48 port and the smallest shall be 24 port. One factory manufactured Category 6 rated UTP patch cord (separated pairs – RJ 45) shall be provided per patch panel port to cross connect dial tone from the “Subscriber PET block” (110 block) or the riser blocks to the voice patch panel.

10.10 Relay Racks

10.10.1 Relay Racks, Wall Mounted

Wall mounted relay racks when used, shall be the swing out type. The racks shall be 19 units (972mm) high, 635mm deep, 503 mm wide and have a capacity of 68kg. The rack shall be equipped with 12-24 mounting holes in a 5/8, 5/8, 1/2 inch universal mounting pattern and come with 12 equipment mounting screws. A 20 amp, 120Vac, 60 Hz. duplex receptacle (dedicated circuit) shall be mounted next to each wall mounted relay rack.

10.10.2 Relay Racks, Floor mounted Voice

Floor mounted voice system relay racks shall be a two post type relay rack, 483mm (19 inch) wide, painted welded steel, painted bolted steel or painted, bolted aluminum. One (1) nine (9) outlet strip (120 Vac, 60hz) shall be installed on each back rail. The outlet strips (2) on each relay rack shall not be powered from the same circuit.

10.10.3 Relay Racks, Floor mounted, data systems

Floor mounted data system relay racks, shall be four post type racks, for 483mm (19 inch) wide, painted welded steel, painted bolted steel or painted, bolted aluminum. The four post racks shall be capable of supporting a minimum of 2000 lbs. One (1) nine (9) outlet strip (120 Vac, 60 hz.) shall be installed on each back rail. The outlet strips (2) on each relay rack shall not be powered from the same circuit.

10.10.4 Floor mounted SIPR net cabinet. The SIPR net cabinet shall be a minimum of 42 units high, 26 inches wide, 30 inches deep. The cabinet shall have solid sides, a smoked Plexiglas front with locks front and back, and a mesh back door. The cabinet shall be equipped with fans and two 120Vac 9 outlet strips powered by two separate 20 ampere circuits. The SIPR net cabinet, associated hardware and wiring shall be separated from the non-secure system components by the distances required by NSTISSAM TEMPEST/2/95, RED/BLACK Installation Guidance.

10.11 Cable Raceways

10.11.1 Non-Secure System Cables

Solid bottom cable tray in various sizes and steel conduit shall be used to distribute the station cables. The cable tray shall be supported at manufacturers recommended distances and be sized so that the initial overall fill ratio does not exceed 40%. 25mm steel conduit shall be used to connect the outlets/station cable to the cable tray. No other material except steel shall be used for communications cable conduit. UL listed, Cable ladder rack, 300mm wide, with 50mm high rails and 150mm cable retaining posts shall be installed around the perimeter of the communications rooms and over the racks. Factory made “waterfall” cable ladder hardware shall be installed in the cable ladder over the relay racks to properly manage the exit of cable from the cable rack.

10.11.2 Secure System cable raceway. The SIPR net cable shall be installed in a visible metal cable tray (or other DISA approved raceway) and connected to the outlets via 27mm steel conduit (or other DISA approved raceway) with welded (weld or steel epoxy weld connections) configured as a protective distribution system, (PDS). The Contractor shall ensure that the proper on-base Security authorities in conjunction with TAC approve the PDS design before installation begins. The Contractor shall be responsible for obtaining the approval and certification on the PDS conduit system after installation. The Secure system cable raceways shall be installed in accordance with National Security Telecommunications And Information Systems Security (NSTISS) 7003, Protective Distribution Systems (PDS).

10.12 Communications Rooms

There shall be at least one communication room in the MWR building on each floor. The doors shall swing out. The rooms shall be located so as to provide service within the distance limitations annotated in the latest version of ANSI/TIA/EIA 568B and be sized and outfitted in accordance with the ANSI EIA/TIA 569B, ISEC I3A and the requirements specified in this design narrative. A minimum distance of 1 meter front, back and side, shall be maintained between any cabinet and any other equipment or walls and 1 meter front and back and one side for the four post racks. For design purposes, a two post rack shall be considered the same size as a four post rack. For swing out wall racks, the one meter from the front and one side is required. On two story buildings unless otherwise noted, there shall be a minimum of one communications room on each floor in accordance with ANSI/EIA/TIA 569B and the ISEC I3A. The second floor communications room shall be over top of the first floor communications room.

10.13 Antenna Television Coax Cable System

The system shall consist of coax cable, coax patch panel, patch cords, signal splitters and outlets. There shall be room reserved on the backboard for amplifiers. The Coax outlets in the buildings shall be connected to a patch panel mounted on the backboard. The patch panel shall be mounted on a swing down bracket. The patch panel shall consist of a patch panel frame and the same female type RG 6, F type modules that are used in the wall plates. Provide one, 2 meter RG 6 patch cord (male to male) for

each patch panel port. The splitters shall be commercial rated for heavy duty use. A 20 amp, 120vac, 60hz. Duplex receptacle (dedicated circuit) shall be mounted within .5m of the “amplifier” area.

10.14 Backboards

The communications rooms or rooms housing communication equipment shall have 20mm void free plywood installed on the wall above the entrance conduit. The backboard shall be painted with two coats of fire retardant paint. The plywood shall be installed 458mm aff and 305mm below the ceiling. There shall be at least four 120Vac, 20 ampere, duplex outlets installed on each wall divided over two circuits in communications rooms and four 120Vac, 20 ampere, duplex outlets divided over two circuits near the communications backboard.

10.15 Bonding, Grounding/Labeling. Bonding, grounding and labeling shall be done in accordance with the US. Army I3A requirements.

10.16 The Contractor shall install a Cross connect cabinet in the RSOI area in accordance with the drawing. The cross connect cabinet shall be a steel cabinet and capable of housing cross connect blocks for 5400 copper cable pairs. The cross connect blocks shall have tails and be spliced to the outside plant cables from

10.17 Building communications requirements. The communications requirements for the buildings follow:

10.17.1 RSOI Barracks Buildings (3) Twenty five outside plant copper cable pairs and 12 single mode fiber optic cable strands shall be installed and terminated in the RSOI barracks building on a plywood backboard above the entrance conduits. The fiber optic cables shall be from the ADN portion of the MWR communications room. The contractor shall install one wall mounted swing out relay rack for voice and one for data. There shall be a minimum of 8 wall outlets installed on each floor even spaced. Only communications backboards are required for this building but the rooms having the backboards must be stacked. Termination and riser hardware is required in accordance with ANSI/TIA/EIA/ 568B and the ISEC I3A guide. A minimum of 8 coax outlets per floor shall be installed at locations indicated by the COR.

10.17.1.1 MWR Building, Renovated
The contractor shall calculate the required copper cable pair by taking the actual number of outlets and multiplying by 1.5, then choosing the next available size Outside plant cable to fit the requirement. Two 24 Single mode fiber optic cables, (SIPR and NIPR) shall be installed from the U.S. Army Area Distribution Node (ADN) manhole that is located between Motor Pool Road and Tropic Lightning road to the MWR first floor communications room. There shall be communications rooms installed on each floor sized as required to meet the ISEC I3A requirements and site specific requirements. The first floor communications room shall be used as an ADN meaning that all fiber optic cables serving the RSOI facilities will originate from that room. This will require two relay racks, one SIPR net and one NIPR net. The MWR portion of the building shall be equipped with one voice/data and coax, outlet per every 48 sq. ft of office space, one voice data outlet plus one wall outlet by each door, and two coax outlets mounted on opposite corners 1 meter below the ceiling, for each exercise room, one voice data outlets per every 6 linear foot of wall space in game rooms, and one voice/data outlet per every phone/internet cafe desk space. TV rooms shall have one voice/data outlet on each wall and two Coax outlets on each wall in the location specified by the COR. The Administration Office area (second floor) shall have one voice data outlet or one power pole (for open office area) per every 48 square ft.
of office space. The printer outlet numbers shall be as per paragraph 10.6.5 of this document. The Mayors office area shall be equipped with three SIPR net circuits in a PDS from the second floor communications room. The COR shall indicate the location of the outlets.

10.17.2 ECP
The Contractor shall install a minimum 50 pair copper and a minimum 72 strand single mode fiber optic cable. The guard towers shall be equipped with 25 pair copper with all 25 pairs multipled between the

towers and an individual six strand single mode fiber optic cable per tower. The office areas in the ECP area shall be equipped with one voice/data outlet per every 48 square ft of office space. The buildings with offices shall be equipped with a communications room if the voice and data equipment cannot fit on wall mounted swing out racks. The ECP communication outside plant cable shall meet all of the termination requirements in this section. The contractor shall calculate the required outside plant cable requirement in accordance with the ISEC I3A guide and adjust the size of the cables accordingly. The Contractor shall choose one of the buildings to be used as a distribution point for the fiber optic cables.

10.17.2 Class 1 Yard

A minimum of twenty five (25) outside plant copper cable pairs and 12 single mode fiber optic cable strands shall be installed and terminated in the office building. In offices there shall be one voice/data outlet installed per every 48 sq. ft of office space and meeting rooms shall have a minimum of two standard outlets installed on each long wall and one standard outlet installed on each short wall. The Contractor shall install a coax outlet in every office and meeting room. In large open office areas, power poles shall be installed.

10.18 Cross connect cabinet. The Contractor shall install a cross connect cabinet in the RSOI area by the new manhole connecting the RSOI area to the U.S. Army ADN located between Motor Pool Road and Tropic Lightning road. The cabinet shall be a metal cabinet, of the same manufacturer and type as the ADN cabinets now, and equipped with cross connect blocks for 5400 copper cable pairs. The cross connect blocks shall be equipped with self strip terminals and the same copper splice modules that are in use now by the U.S. Army. The Contractor shall install a 1200 pair copper cable from the U.S Army ADN Cross connect cabinet to the RSOI cross connect cabinet and terminate all 1200 pairs. The Contractor shall splice the outside plant cable to the cross connect block cable tails. All copper distribution cable pairs for the RSOI area shall originate from this cross connect cabinet.

10.19 Testing

The Contractor shall develop and submit for approval, test plans for the following cable systems.

10.19.1 Inside Plant (Premise) Voice/Data Cable

The Contractor shall perform Category 6 link tests in accordance with ANSI/TIA/EIA 568-B.1 and ANSI/TIA/EIA 568-B.2. Test shall include wire map, length, insertion loss, NESXT, PSNEXT, ELFEXT, PSELFEXT, return loss, propagation delay, and delay skew. Cables failing the tests shall be replaced at no additional cost to the Government.

10.19.2 Inside Plant (Premise) Riser Cable

The Contractor shall perform testing on the riser cable pairs in accordance with ANSI/TIA/EIA 568-B.2 and ASTM D 4566. The tests as annotated by ASTM D 4566 shall include DC resistance, DC resistance unbalance, mutual capacitance and capacitance unbalance, pair to ground. Test for characteristic impedance and structural return loss in accordance with ASTM D 4566 Method 3. The Contractor shall test all binder groups for PSNEXT loss in accordance with ASTM D4566. Cables failing the tests shall be replaced at no additional cost to the Government. The riser cables shall not be cross connected during this test. Contractor shall provide the test data from the testing equipment in two (2) hard copies and one (1)_Electronic to the Corps of Engineers or to the COR as a submittal

10.19.3 Inside Plant (Premise) Fiber Optic Cable

The Contractor shall perform optical fiber end-to-end link tests in accordance with ANSI/EIA/TIA-568-B.3. The hard copy printouts shall be provided to the Government. Cables failing the tests shall be replaced at no additional cost to the Government.

10.19.4 Coax

The coax cable shall be swept tested over the full frequency range that will be used. Cables failing the tests shall be removed and replaced at no additional cost to the Government.

10.19.5 Outside plant cable copper and fiber optic

The outside plant cable shall be tested in accordance with RUS Bulletin 1753F-201.

10.20 Communication System Personnel Requirements

10.20.1 Designers. The Designers shall have a minimum ten (10) years documented experience with U.S. Military standards and the RUS standards as well as a minimum of 5 years in category 6 cables and hardware design. The Design personnel shall be submitted through the Contracting Officer to TAC for approval. The design shall not be started until the design personnel are approved.

10.20.2 Installers. The inside plant (premise) installers and supervisors shall have a minimum five years documented experience with category 6 cable and hardware installation, and recent documented factory training and certification from the manufacturer of the category 6 hardware (outlets, patch panels etc.) being used. The Inside plant (premise) installation personnel shall be submitted through the Contracting Officer to TAC for approval. The installation shall not be started until the installation personnel are approved.

10.20.3 Cable Splicers
The splicers shall have seven (7) years documented unsupervised experience with the RUS cable and RUS listed splice closures. The fiber optic splicers shall have 7 years documented un-supervised experience with fusion splicing, 5 years documented un-supervised experience with the brand of fusion splicing machine and 3 years documented un-supervised experience with the model number of fusion splicing machine used. The cable splicing personnel shall be submitted through the Contracting Officer to TAC for approval. The cable splicing shall not be started until the splicing personnel are approved.

-END OF SECTION-

SECTION 01060

SPECIAL CLAUSES FOR SOUTH PARK IMPROVEMENTS

PART 1 GENERAL

1.1 PRECONSTRUCTION CONFERENCE

1.1.1 Schedule of Meeting

At the earliest practicable time, prior to commencement of the work, the Contractor and any Subcontractors whose presence is necessary or requested, shall meet in conference with representatives of the Contracting Officer to discuss and develop a mutual understanding relative to the details of the administration and execution of this contract. This will include but not necessarily be limited to the Contractor's Quality Control (CQC) Program, the Contractors Accident Prevention Program, submittals, correspondence, schedule, access to the work site, security requirements, interface requirements, temporary facilities and services, hazards and risks, working after normal hours or on weekends or holidays, assignment of inspectors, representations, special requirements, phasing, and other aspects of this project that warrant clarification and understanding.

1.1.2 Meeting Minutes

It shall be the responsibility of the Contractors CQC System Manager to prepare detailed minutes of this meeting and submit those minutes to the Contracting Officer for approval within three (3) workdays. Any corrections deemed necessary by the Contracting Officer shall be incorporated and resubmitted within two (2) calendar days after receipt. Upon approval of the minutes by the Contracting Officer, the Contractor shall distribute the minutes to all parties present or concerned.

1.2 AREA USE PLAN

The Contractor shall submit to the Contracting Officer, within seven (7) calendar days after award of this contract, an Area Use Plan designating intended use of all areas within the project boundaries. This plan shall include, but not necessarily be limited to the following: the proposed location and dimensions of any area to be fenced and used by the Contractor; construction plant and building installations/the number of trailers and facilities to be used; avenues of ingress/egress to the fenced areas and details of the fence installation; drawings showing temporary electrical installations; temporary water and sewage disposal installations; material storage areas; hazardous storage areas. Any areas that may have to be graveled shall also be identified. The plan shall also include a narrative description of the building structural system, the site utility system and the office or administration facilities. The Contractor shall also indicate if the use of a supplemental or other staging area is desired. The Contractor shall not begin construction of the mobilization facilities prior to approval by the Contracting Officer of the Area Use Plan described herein.

1.3 CONTRACTOR'S MOBILIZATION AREA

The Contractor will be permitted to use an area designated by the Contracting Officer within the contract limits for operation of his construction equipment and plants, shops, warehouses, and offices. Utilities will be provided for the Contractor as described below. The Contractor is responsible for obtaining any required additional mobilization area above that designated. The construction site shall be cleared of construction debris and other materials and the area restored to its final grade.

1.3.1 Contractor's Temporary Facilities

1.3.1.1 General

All facilities within the Contractor's mobilization area shall be of substantial construction suitable for the local weather conditions. Sanitary facilities shall meet the requirements of Corps of Engineers, Safety and Health Requirements Manual EM 385-1-1. Local nationals will not be granted any privileges under this contract.

1.3.1.2 Administrative Field Offices

The Contractor may provide and maintain administrative field office facilities within the mobilization area at the designated site. Government office and warehouse facilities will not be available to the Contractor's personnel.

1.3.1.3 Storage Area

The Contractor shall construct a temporary 1.8 meter (6 foot) high chain link fence around trailers and materials. The fence shall include plastic strip inserts, colored green or brown, so that visibility through the fence is obstructed. Fence posts may be driven, in lieu of concrete bases, where soil conditions permit. Trailers, materials, or equipment shall not be placed or stored outside the fenced area unless approved in writing by the Contracting Officer.

1.3.1.4 Plant Communication

Whenever the Contractor has the individual elements of its plant so located that operation by normal voice between these elements is not satisfactory, the Contractor shall install a satisfactory means of communication, such as telephone or other suitable devices. If radio communication is approved by Contracting Officer / installation security office, frequency selection shall be approved by Contracting Officer to prevent interference with installation operations. Such devices shall be made available for use by Government personnel.

.

1.3.1.5 Appearance of Mobilization Site Facilities and/or Trailers

Mobilization Site Facilities and/or Trailers utilized by the Contractor for administrative or material storage purposes shall present a clean and neat exterior appearance and shall be in a state of good repair. Trailers or other transportable structures which, in the opinion of the Contracting Officer, require exterior painting or maintenance will not be allowed on the construction site until such work or maintenance has been performed to the satisfaction of the Contracting Officer.

1.3.1.6 Maintenance of Storage Area

Fencing shall be kept in a state of good repair and proper alignment. Should the Contractor elect to traverse unpaved areas which are not established roadways with construction equipment or other vehicles, such areas shall be covered with a layer of gravel as necessary to prevent rutting and the tracking of soil onto paved or established roadways; gravel gradation shall be at the Contractor's discretion.

1.3.1.7 Security Provisions

Adequate outside security lighting shall be provided at the Contractor's temporary facilities. The Contractor shall be responsible for the security of its own facilities and equipment.

1.3.1.8 Sanitation

a. Sanitary Facilities: The Contractor shall provide portable sanitation facilities for the Contractor’s use. The Contractor shall be responsible for maintaining such facilities at no expense to the Government.
b. Trash Disposal: The Contractor shall be responsible for collection and disposal of trash from the work

areas and from the mobilization area. General construction debris and demolition debris shall be collected and transported by the Contractor to a location designated by the Government. Construction debris, waste materials, packaging material and the like shall be removed from the work site daily. Loose debris capable of being windblown, shall be immediately placed in sealed or covered containers to prevent it from being blown onto taxiways or runways. Any dirt or soil that is tracked onto paved or surfaced roadways shall be cleaned daily. Materials resulting from demolition activities that are salvageable shall be stored within the fenced area described above. Stored material not indoors, whether new or salvaged, shall be neatly stacked when stored.

1.3.1.9 Telephone

The Contractor shall make arrangements to install and pay all costs for telephone facilities desired.

1.3.1.10 Restoration of Storage Area

Upon completion of the project and after removal of mobilization facilities, trailers, materials, and equipment from within the fenced area, the fence shall be removed and will become the property of the Contractor. Areas used by the Contractor for the storage of equipment or material, or other use, shall be restored to the original or better condition. Gravel used to traverse unpaved areas shall be removed and all such areas restored to their original conditions.

1.3.2 Protection and Maintenance of Traffic

During construction the Contractor shall provide access and temporary relocated roads as necessary to maintain traffic. The Contractor shall maintain and protect traffic on all affected roads during the construction period except as otherwise specifically directed by the Contracting Officer. Measures for the protection and diversion of traffic, including the provision of watchmen and flagmen, erection of barricades, placing of lights around and in front of equipment and the work, and the erection and maintenance of adequate warning, danger, and direction signs, shall be as required by the Host Nation and base authorities having jurisdiction. The traveling public shall be protected from damage to person and property. The Contractor's traffic on roads selected for hauling material to and from the site shall interfere as little as possible with base traffic. The Contractor shall investigate the adequacy of existing roads and the allowable load limit on these roads. The Contractor shall be responsible for the repair of any damage to roads caused by construction operations.

1.3.2.1 Use of Existing Roads as Haul Routes

The Contractor shall be responsible for coordinating with the base authorities for use of any existing roads as haul routes. Construction, and routing of new haul roads, and/or upgrading of existing roads to carry anticipated construction traffic shall be coordinated with the Base authorities and is the sole responsibility of the Contractor.

1.3.2.2 Employee Parking

The Contractor’s employees may be allowed parking on the military installation as directed by the Contracting Officer. The Contractor must apply for this privilege and may not receive base parking depending upon the Force Protection threat level at Kandahar Air Field. The Contractor is responsible for transporting workers (local nationals) from off post to the worksite, coordinating security identification screening, and cooperating in gate searches with the base authorities. The government reserves the right to terminate any and all contractor parking at any time.

1.3.3 Temporary Project Safety Fencing and Barricades

The Contractor shall impose all measures necessary to limit public access to hazardous areas and to ensure the restriction of workers to the immediate area of the construction and mobilization site. The Contracting Officer may require in writing that the Contractor remove from the work any employee found

to be in violation of this requirement.

1.3.3.1 Barricades

Barricades shall be required whenever safe public access to paved areas such as roads, parking areas or sidewalks is prevented by construction activities or as otherwise necessary to ensure the safety of both pedestrian and vehicular traffic. Barricades shall be securely placed, clearly visible with adequate illumination to provide sufficient visual warning of the hazard during both day and night. Travel to and from the project site shall be restricted to a route approved by the Contracting Officer.

1.3.4 Host Nation Authorizations, Permits and Licenses

It shall be the Contractor's responsibility to obtain such local authorizations, permits and licenses necessary to establish his quarry operations, batching operations and haul routes (See Special Clause entitled: COMPLIANCE WITH HOST COUNTRY RULES AND CUSTOMS).

1.4 RESPONSIBILITY FOR PHYSICAL SECURITY

Prior to mobilization, the Contractor shall submit his proposed means of providing project security to prevent unauthorized access to equipment, facilities, materials and documents, and to safeguard them against sabotage, damage, and theft. The Contractor shall be responsible for physical security of all materials, supplies, and equipment of every description, including property which may be Government-furnished or owned, for all areas occupied jointly by the Contractor and the Government, as well as for all work performed.

1.5 DUST CONTROL

The Contractor shall be required to control objectionable dust in the work areas, access roadways, and haul roads by means of controlled vehicle speeds or dust palliatives. Vehicles transporting sand, cement, gravel or other materials creating a dust problem shall be covered, as directed by the Contracting Officer, or in accordance with local Laws, codes, and regulations.

1.6 DIGGING PERMITS

1.6.1 Requirements for Digging Permits

“Digging” is defined as any excavation greater than 500 mm. Any digging must be coordinated and approved by the Kandahar Base Engineer. The permit process is described here within.

1.6.2 Requests for Digging Permits

Requests for Digging Permits shall be submitted to Contracting Officer a minimum of seven (7) days prior to the start of the work activity covered by the permit. The request for a Digging Permit shall include a narrative description of the work to be performed and a detailed map of the area of the excavation clearly marking the location of all known utilities or other obstructions. If the work activity covered by the Digging Permit request also requires a utility outage, a separate request for the outage shall be submitted in accordance with the paragraph entitled CONNECTIONS TO EXISTING UTILITIES.

1.6.3 Preparation of Requests for Digging Permits

Prior to submitting a request for a Digging Permit, the Contractor shall carefully review the area to be excavated to determine the location of existing utilities and other obstructions. The Contractor will review available drawings and will conduct a visual inspection of the site. The Contractor will utilize underground utility detecting devices such as metal and cable detectors to determine the location of existing utilities. All utility lines found shall be clearly flagged or marked and the location of the utility shall be shown on the drawing to be submitted with the request for Digging Permit.

1.6.4 Existing Underground Utilities

The Contractor shall exercise utmost care in researching locations of existing utilities and reducing damage to existing utilities. Any utilities damaged by the Contractor shall be promptly repaired by the Contractor. The Contracting Officer will review and approve any proposed repairs. Any damage to existing utilities will be immediately reported to the Contracting Officer and the Base Commander.

1.7 CONNECTIONS TO EXISTING UTILITIES

1.7.1 General

Any outage involving disruption of electrical service beyond the site area shall be requested in writing at least ten (10) days in advance of the date requested for the commencement of the outage. The Contractor shall provide a request, detailing the type of outage needed (water, sewer, electrical, steam, etc.), the time needed to perform the work, the reason for the outage, and the known affected facilities. The Contracting Officer shall be contacted prior to the outage to confirm the time and date. If the Contractor fails to initiate work at the approved time, the Contracting Officer may cancel the approved outage and may direct the Contractor to resubmit a new request. No part of the time lost due to the Contractors failure to properly schedule an outage shall be made the subject of claim for extension of time or for excess costs or damages by the Contractor.

1.7.1.1 Performance of Work During Non-Standard Hours

To minimize outage impact to the mission of the installation, all outages shall be scheduled on weekends or from 2100 – 0530 hours on duty days and/or as directed by Contracting Officer Representative (COR). The period proposed for performance of the outage shall include sufficient contingencies to preclude impact to the peak working hours 0530 – 1800 hours during the workweek.

1.7.1.2 Exterior Night Lighting

Exterior night lighting shall be provided in conformance with EM-385-1-1 entitled Safety and Health Requirements Manual.

1.7.2 Existing Underground Utilities

The Contractor is provided notice that existing utilities may be present in the construction area. The Contractor shall exercise the utmost care in researching locations of existing utility lines by implementing control measures to eliminate, or reduce to a level acceptable to the Contracting Officer, the chance of damaging or destroying existing utilities.

1.7.2.1 Use of Underground Utility Detecting Device

Prior to any excavation, a metal and/or cable-detecting device shall be used along the route of the excavation. All underground utilities discovered by this method will be flagged a minimum distance of one-half (1/2) meter on each side of the location.

1.7.2.2 Hand Excavation

Hand excavation methods and special supervisory care shall be used between any flagged markers, in areas of known or suspected hazards, and in areas known or suspected to have multiple and/or concentrated utility lines or connections.

1.7.3 Repair of Damaged Utilities

The Contractor shall be responsible to repair any utilities damaged by him. The method of repair and

schedule for performance of the repair shall be coordinated with, and subject to the approval of, the Contracting Officer. The repair work and any temporary work required to keep the system operational while repairs are being completed, shall be performed at no cost to the Government.

1.8 WATER

The Contractor shall install and maintain necessary supply connections and piping for same, but only at such locations and in such manner as may be approved by the Contracting Officer. Water required for final testing, adjusting and balancing of HVAC systems will be furnished by the Government. Before final acceptance of systems, or facilities, all temporary connections and piping installed by the Contractor shall be removed at his expense in a manner satisfactory to the Contracting Officer.

1.9 NOT USED

1.10 ELECTRICITY (GOVERNMENT PROVIDED)

Electrical service is to be provided by the Government within this contract since electrical power connection shall be to existing nearby Government owned electrical power system. However, the Contractor may be required to provide temporary construction power until permanent power system is connected. The means of doing so, such as by temporary distribution systems, shall be the responsibility of the Contractor. All temporary connections for electricity shall be subject to the approval of the Contracting Officer and shall comply with Corps of Engineers manual EM 385-1-1 entitled Safety and Health Requirements Manual. All temporary lines shall be furnished, installed, connected and maintained by the Contractor in a workmanlike manner satisfactory to the Contracting Officer. Before final acceptance of systems, or facilities, all temporary connections installed by the Contractor shall be removed at his expense in a manner satisfactory to the Contracting Officer. The Government, at times, may not be able to furnish electricity; the contractor is advised to have back-up redundancy in this event.

1.11 WORK OUTSIDE REGULAR HOURS

If the Contractor desires to carry on work outside regular base duty hours, or on holidays, including the following U.S. holidays: New Year's Day, Martin Luther King Jr Birthday, President's Day, Memorial Day, Independence Day, Labor Day, Columbus Day, Veteran's Day, Thanksgiving and Christmas. the Contractor shall submit an application to the Contracting Officer. Due to reliance upon local national laborers and time off due to local observances, there may be disruptions. Potentials dates are the following local observances: National Islamic Holiday of Ashura, Ramadan (actual date varies – check with local authorities).] The Contractor shall allow ample time to enable satisfactory arrangements to be made by the Government for inspecting the work in progress. At night, exterior lighting shall be provided in conformance with EM-385-1-1 entitled "Safety and Health Requirements Manual".

1.12 SCHEDULING OF WORK IN EXISTING FACILITIES

As soon as practicable, but in any event not later than fourteen (14) calendar days after award of this contract, the Contractor shall meet in conference with the Contracting Officer, or his duly authorized representatives, to discuss and develop mutual understanding relative to the scheduling of work in and access to the existing facilities where work has to be performed under this contract, so that the Contractor's proposed construction schedule is coordinated with the operating and security requirements of the installation.

1.13 SPECIAL FACILITIES AND SERVICES TO BE FURNISHED BY THE CONTRACTOR

The Contractor shall furnish the facilities and services listed in this clause for Corps of Engineers personnel and other persons as designated by the Contracting Officer. All facilities, furnishings, materials, and equipment shall be new when furnished at the site. The Contractor shall fully maintain and repair all facilities, furnishings and equipment listed below. All facilities, furnishings, materials, and equipment furnished and/or installed by the Contractor under this clause shall remain the property of the

Contractor at the completion of the contract. Facility structures shall be modular or containerized, suitable for easy movement at a later date.

1.14.1 As-Built Drawing Submittals

a. Government approval is required for As-Built drawings as below in accordance with Section 01335, SUBMITTAL PROCEDURES.

b. Drawings showing final as-built conditions of the project. The local language of Afghanistan shall be added to project As-Built drawings. The final CADD as-built drawings shall consist of **one set** of electronic CADD drawing files in the specified format, and **two half-size and two full-size paper copies** of the approved as-built drawings.

1.14.2 As-Built Drawings

This paragraph covers as-built drawings complete, as a requirement of the contract. The terms "drawings," "contract drawings," "drawing files," "working as-built drawings" and "final as-built drawings" refer to contract drawings which are revised to be used for final as-built drawings.

1.14.2.1 Government Furnished Materials

One set of electronic CADD files in the specified software and format revised to reflect all bid amendments will be provided by the Government at the preconstruction conference for projects requiring CADD file as-built drawings.

1.14.2.2 Working As-Built and Final As-Built Drawings

a. The Contractor shall revise 2 sets of paper drawings by red-line process to show the as-built conditions during the prosecution of the project. These working as-built marked drawings shall be kept current on a weekly basis and at least one set shall be available on the jobsite at all times. Changes from the contract plans which are made in the work or additional information which might be uncovered in the course of construction shall be accurately and neatly recorded as they occur by means of details and notes. Final as-built drawings shall be prepared after the completion of each definable feature of work as listed in the Contractor Quality Control Plan (Foundations, Utilities, Structural Steel, etc., as appropriate for the project). The working as-built marked prints and final as-built drawings will be jointly reviewed for accuracy and completeness by the Contracting Officer and the Contractor prior to submission of each monthly pay estimate. If the Contractor fails to maintain the working and final as-built drawings as specified herein, the Contracting Officer will deduct from the monthly progress payment an amount representing the estimated cost of maintaining the as-built drawings. This monthly deduction will continue until an agreement can be reached between the Contracting Officer and the Contractor regarding the accuracy and completeness of updated drawings. The working and final as-built drawings shall show, but shall not be limited to, the following information:

b. The actual location, kinds and sizes of all sub-surface utility lines. In order that the location of these lines and appurtenances may be determined in the event the surface openings or indicators become covered over or obscured, the as-built drawings shall show, by offset dimensions to two permanently fixed surface features, the end of each run including each change in direction. Valves, splice boxes and similar appurtenances shall be located by dimensioning along the utility run from a reference point. The average depth below the surface of each run shall also be recorded.

c. The location and dimensions of any changes within the building structure.

d. Correct grade, elevations, cross section, or alignment of roads, earthwork, structures or utilities if any changes were made from contract plans.

e. Changes in details of design or additional information obtained from working drawings specified to be

prepared and/or furnished by the Contractor; including but not limited to fabrication, erection, installation plans and placing details, pipe sizes, insulation material, dimensions of equipment foundations, etc.

f. The topography, invert elevations and grades of drainage installed or affected as part of the project construction.

g. Changes or modifications which result from the final inspection.

h. Where contract drawings or specifications present options, only the option selected for construction shall be shown on the final as-built prints.

i. If borrow material for this project is from sources on Government property, or if Government property is used as a spoil area, the Contractor shall furnish a contour map of the final borrow pit/spoil area elevations.

j. Systems designed or enhanced by the Contractor, such as HVAC controls, fire alarm, fire sprinkler, and irrigation systems.

k. Modifications (change order price shall include the Contractor's cost to change working and final as-built drawings to reflect modifications) and compliance with the following procedures.

(1) Directions in the modification for posting descriptive changes shall be followed.

(2) A Modification Circle shall be placed at the location of each deletion.

(3) For new details or sections which are added to a drawing, a Modification Circle shall be placed by the detail or section title.

(4) For minor changes, a Modification Circle shall be placed by the area changed on the drawing (each location).

(5) For major changes to a drawing, a Modification Circle shall be placed by the title of the affected plan, section, or detail at each location.

(6) For changes to schedules or drawings, a Modification Circle shall be placed either by the schedule heading or by the change in the schedule.

(7) The Modification Circle size shall be 12.7 mm 1/2 inch diameter unless the area where the circle is to be placed is crowded. Smaller size circle shall be used for crowded areas.

1.14.3 Drawing Preparation

The as-built drawings shall be modified as may be necessary to correctly show the features of the project as it has been constructed by bringing the contract set into agreement with approved working as-built prints, and adding such additional drawings as may be necessary. These working as-built marked prints shall be neat, legible and accurate. These drawings are part of the permanent records of this project and shall be returned to the Contracting Officer after approval by the Government. Any drawings damaged or lost by the Contractor shall be satisfactorily replaced by the Contractor at no expense to the Government.

1.14.4 Computer Aided Design and Drafting (CADD) Drawings

a. Only personnel proficient in the preparation of CADD drawings shall be employed to modify the contract drawings or prepare additional new drawings. Additions and corrections to the contract drawings shall be equal in quality and detail to that of the originals. Line colors, line weights, lettering, layering conventions, and symbols shall be the same as the original line colors, line weights, lettering,

layering conventions, and symbols. If additional drawings are required, they shall be prepared using the specified electronic file format applying the same graphic standards specified for original drawings. The title block and drawing border to be used for any new final as-built drawings shall be identical to that used on the contract drawings. Additions and corrections to the contract drawings shall be accomplished using CADD files. The Contractor will be furnished "as-designed" drawings in AutoCAD Release 2004 format compatible with a Windows XP operating system. The electronic files will be supplied on compact disc, read-only memory (CD-ROM). The Contractor shall be responsible for providing all program files and hardware necessary to prepare final as-built drawings.

b. Prior to submittal of the first design submittal involving CADD drawings, the Contractor shall prepare one typical CADD drawing for the project and furnish, via ENG Form 4025, the electronic CADD drawing file for review and approval by the Contracting Officer. All Government comments involving changes to this single drawing shall be accomplished and re-submittal(s) made until the Government is satisfied that all CADD Standards are being followed and all subsequent drawings will also be in compliance with these Standards.

c. CADD colors shall be the "base" colors of red, green, and blue. Color code for changes shall be as follows:

(1) Deletions (red) - Deleted graphic items (lines) shall be colored red with red lettering in notes and leaders.

(2) Additions (Green) - Added items shall be drawn in green with green lettering in notes and leaders.

(3) Special (Blue) - Items requiring special information, coordination, or special detailing or detailing notes shall be in blue.

d. The Contract Drawing files shall be renamed in a manner related to the contract number (i.e., 98-C-10.DGN) as instructed in the Pre-Construction conference. Marked-up changes shall be made only to those renamed files. All changes shall be made on the layer/level as the original item. There shall be no deletions of existing lines; existing lines shall be over struck in red. Additions shall be in green with line weights the same as the drawing. Special notes shall be in blue on layer#63.

e. When final revisions have been completed, the cover sheet drawing shall show the wording "RECORD DRAWING AS-BUILT" followed by the name of the Contractor in letters at least 5 mm 3/16 inch high. All other contract drawings shall be marked either "As-Built" drawing denoting no revisions on the sheet or "Revised As-Built" denoting one or more revisions. Original contract drawings shall be dated in the revision block.

f. After Government approval of all of the working as-built drawings for a phase of work, the Contractor shall prepare the final CADD as-built drawings for that phase of work and submit two sets of full size paper copy prints of these drawings for Government review, comparison with approved red-line marked up drawings, and approval. The Government will promptly return one set of prints annotated with any necessary corrections to the CADD file(s) if corrections are required prior to approval. Within 20 days of substantial completion of all phases of work, the Contractor shall submit the final as-built drawing package for the entire project. The submittal shall consist of one set of electronic files on compact disc, read-only memory (CD-ROM), one set of full size paper prints and one set of the approved working as-built drawings. They shall be complete in all details and identical in form and function to the contract drawing files supplied by the Government. Any transactions or adjustments necessary to accomplish this is the responsibility of the Contractor. The Government reserves the right to reject any drawing files it deems incompatible with the CADD system. Upon approval by the Government of the final as-built drawing package for the entire project, the Contractor shall provide the number of as-built copies noted in Paragraph 1.1 of this Section.

g. Paper prints, drawing files and storage media submitted will become the property of the Government

upon final approval. Failure to submit final as-built drawing files and marked prints as specified shall be cause for withholding any payment due the Contractor under this contract. Approval and acceptance of final as-built drawings shall be accomplished before final payment is made to the Contractor.

1.14.5 Payment

No separate payment will be made for as-built drawings required under this contract, and all costs accrued in connection with such drawings shall be considered a subsidiary obligation of the Contractor.

1.15 CERTIFICATES OF COMPLIANCE

Any certificates required for demonstrating proof of compliance of materials with specification requirements shall be executed in accordance with Section 01335 SUBMITTAL PROCEDURES FOR DESIGN/BUILD. Each certificate shall be signed by an official authorized to certify in behalf of the manufacturing company involved and shall contain the name and address of the Contractor, the project name and location, description and the quantity of the items involved, and date or dates of shipment or delivery to which the certificates apply. Copies of laboratory test reports submitted with certificates shall contain the name and address of the testing laboratory and the date or dates of the tests to which the report applies. Certification shall not be construed as relieving the Contractor from furnishing satisfactory material.

1.16 ACCIDENT PREVENTION

The Contractor shall comply with all applicable Host Country laws and with such additional measures as the Contracting Officer may find necessary in accordance with CONTRACT CLAUSE 52.236-13 entitled ACCIDENT PREVENTION (NOV1991)-ALTERNATE 1 (APR 1984). Applicable provisions of the Corps of Engineers manual entitled Safety and Health Requirements Manual EM 385-1-1 will be applied to all work under this contract. The referenced manual may be obtained from the Contracting Officer at the jobsite or from the Afghanistan Engineer District at Kabul, Afghanistan.

1.16.1 Accident Prevention Program

Within seven (7) days after award of this contract, and at least ten (10) days prior to the accident prevention pre-work conference, four (4) copies of the Accident Prevention Plan required by the CONTRACT CLAUSE 52.236-13 entitled ACCIDENT PREVENTION (NOV 1991)- ALTERNATE I shall be submitted for review by the Contracting Officer. The Contractor shall not commence physical work at the site until the Accident Prevention Plan (APP) has been reviewed and accepted by the Contracting Officer. The APP shall meet the requirements listed in Appendix "A" of EM385-1-1. The program shall include the following: TAC Form 61 " Accident Prevention Program Hazard Analysis (Activity Hazard Analysis)" fully completed and signed by an executive officer of the company in block No. 13. The Activity Hazard Analysis is a method in which those hazards likely to cause a serious injury or fatality are analyzed for each phase of operations. Corrective action is planned in advance, which will eliminate the hazards. An analysis is required for each new phase of work. On large or complex jobs the first phase may be presented in detail with the submittal of the Accident Prevention Plan rather than presenting the complete analysis. If the plan is to be presented in phases, a proposed outline for future phases must be submitted as a part of the initial Accident Prevention Plan submittal. Accident Prevention Plans will be reviewed for timeliness and adequacy at least monthly with a signature sheet signed and dated documenting that these reviews took place. Copy of company policy statement of Accident Prevention and any other guidance as required by EM 385-1-1, Appendix A.

1.16.2 Ground Fault Circuit Interrupter (GFCI) Requirement – Overseas Construction

The Corps of Engineers Health and Safety Manual, EM 385-1-1, section 11.C.05.a. states: "The GFCI device shall be calibrated to trip within the threshold values of 5 ma +/- 1 ma as specified in Underwriters Laboratory (UL) Standard 943." A variance from USACE has been granted allowing 10 ma,

in lieu of 5 ma, for overseas activities that use 220 Volts (V)/50 hertz (Hz) electrical power.

1.16.3 Temporary Power - Electrical Distribution Boxes

EM 385-1-1 section 11.A.01.a. states, "All electrical wiring and equipment shall be a type listed by a nationally recognized testing laboratory for the specific application for which it is to be used." This includes temporary electrical distribution boxes. Locally manufactured electrical boxes will not be allowed. Only manufactured electrical distribution boxes that meet the European CE requirements, with 10 ma CE type GFCIs installed shall be allowed.

Contractors shall:

a. Make no modifications that might void any CE or manufacturer certification.

b. Test the installed systems to demonstrate that they operate properly and provide the 10 ma earth leakage protection.

c. Ensure GFCIs will have an integral push-to-test function. The testing shall be performed on a regular basis.

d. Check that proper grounding is checked regularly and flexible cords, connectors, and sockets inspected before each use.

1.17 HAZARDOUS MATERIALS

Should the Contractor encounter asbestos or other hazardous materials, during the construction period of this contract, he shall immediately stop all work activities in the area where the hazardous material is discovered. The Contractor shall then notify the Contracting Officer; identify the area of danger; and not proceed with work in that area until given approval from the Contracting Officer to continue work activities. Hazardous material is considered to be asbestos, explosive devices, toxic waste, or material hazardous to health and safety. The Contractor shall secure the area from daily traffic until it is safe to resume normal activities.

1.18 SPARE PARTS

1.18.1 General

The requirements of this clause are in addition to any requirements for the provision of specific spare parts to be provided by the Contractor included in Technical Provisions. The Contractor shall furnish spare parts as directed by the Contracting Officer under the provisions of this clause for all equipment for which O&M data is to be provided under Clause OPERATION AND MAINTENANCE (O&M) DATA of this contract. The term "spare parts" as used herein shall include spare parts, special tools and test equipment.

1.18.2 Selection of Spare Parts to be Furnished

The Contractor shall provide master parts lists, recommended spare parts lists and lists of special tools and test equipment as a part of the equipment O&M data required by Clause OPERATION AND MAINTENANCE (O&M) DATA. The master parts list shall include the supplier's price for each part. After review of the lists, the Contracting Officer will select spare parts and furnish written direction to the Contractor indicating quantities and types of spare parts to be furnished by the Contractor. Written directions for spare parts orders may be provided on an incremental basis as reviews of O&M data submitted by the Contractor are completed but will not necessarily be issued in the sequence in which the Contractor submitted the equipment O&M data.

1.18.3 Procurement and Delivery of Spare Parts

The Contractor shall procure and be responsible for delivery, receipt, handling, placing in storage, inventory, and turnover to the Contracting Officer all spare parts selected by the Contracting Officer. In addition to the recommended spare parts list required in paragraph SELECTION OF SPARE PARTS TO BE FURNISHED above, the Contractor is responsible to have one (1) year supply of manufacturer's recommended spare parts on site ready to turn over to the Contracting Officer at the time of acceptance of the facility.

1.18.3.1 Shipment and Delivery

The Contractor shall be responsible for the shipment and delivery of spare parts to the location on or near the site in Afghanistan as selected by the Contracting Officer. The Contractor shall provide all manpower and equipment required to receive and place into designated storage areas all spare parts purchased under this clause. The Contractor shall give the Contracting Officer thirty (30) calendar days notice of arrival at the site of the first shipment.

1.18.3.2 Turnover of Spare Parts

The Contractor shall notify the Contracting Officer seventy-two (72) hours prior to delivery of spare parts to the designated storage area. The Contractor and the Contracting Officer will perform a joint inventory of the spare parts and the spare parts will be turned over to the Contracting Officer. Spare parts purchased under this clause shall not be used by the Contractor.

1.18.3.3 Parts and Package Identification

Prior to shipment from point of purchase, each spare part shall be tagged or otherwise marked or labeled. Such labeling may be placed or affixed to the container, box or packaging in which spare parts are located when it is not feasible to place or affix such labeling directly on each spare part. Tags or labels shall include, but not necessarily be limited to; part number, description, parent equipment name and number location, project and/or other data as directed by the Contracting Officer.

1.18.3.4 Preservation and Packaging Instruction

a. Items ordered under this contract shall be preserved and packed for a minimum of three (3) years shelf life storage. All items shall be individually packaged except when the manufacturer specifies that the items are to be used in sets. Appropriate identification labels must be affixed to the items protective box or package. After the spare parts are packaged, the manufacturer shall weigh the spare parts and packaging and place the weight and size of the packaged container on the label with other information as outlined herein. Each item, not normally identified with manufacturer's name and part number, shall have an appropriate label affixed to it with manufacturer's name and part number.

b. Machined spare parts shall be lubricated or coated in order to withstand extensive periods of storage in a highly corrosive atmosphere.

c. Large items (greater than 22.7 kg (50 lbs.), or larger than 0.03 CM (one cubic foot) shall be packaged in waterproof wooden boxes and properly braced. Cushioning shall be used to prevent damage to the item and to the packaging material.

d. Solid state components, such as diodes, transistors, integrated circuits or equipment consisting of such parts that can be damaged as a result of static electricity and other stray electro-magnetic fields shall be packaged in heat-sealed, aluminum foil, laminated, flexible packages.

e. All other spare parts shall be packaged in heat sealed plastic bags or wrap. Delicate and more fragile items such as test equipment shall be cushioned or wrapped with transparent bubble wrap material prior to being inserted into the plastic package.

1.18.4 Warranty

All spare parts provided by the Contractor under this clause are subject to the general warranty clauses of this contract.

1.18.5 Payments for Spare Parts

Payments for spare parts ordered under the paragraph entitled "Selection of Spare Parts To Be Furnished" will be made under the work item of the Work Breakdown Sheet entitled "Spare Parts". Payments for spare parts specifically required elsewhere in this contract shall be considered as part of those equipment costs and shall be included in other payment items as appropriate. Payments for spare parts ordered under this clause shall be based on the invoice price (FOB supplier) plus certified invoice price of surface shipment to the site in Afghanistan. The invoice price (FOB supplier) shall include the separately listed cost for preservation and packaging by the manufacturer as specified herein. The Contractor shall provide invoices and any additional backup, which may be required to demonstrate that the invoices presented represent the cost of spare parts, preservation and packaging, and cost of surface shipment to the site. Payment for handling, delivery, inventory, turnover, customs, overhead or profit shall not be paid or allowed under this Contract Provision, and shall be included in the cost for installation of this equipment under the other appropriate payment items of this contract. Price increases over prices furnished under paragraph SELECTION OF SPARE PARTS TO BE FURNISHED shall be fully substantiated. Payment for spare parts will be made after the spare parts have been accepted at the site by the Contracting Officer. If the total payments under the work item entitled "Spare Parts" does not reduce the balance of this work item to zero, the remaining balance will be deducted from the final contract amount. If orders exceed the work item entitled "Spare Parts", a modification for equitable adjustment will be issued in accordance with Contract Clause 52.243-4 entitled CHANGES. Payments for spare parts ordered under this clause shall constitute full payment for all cost of the spare parts and associated cost of preservation and packaging, and cost of surface shipment to the site. Other ancillary costs shall be included by the Contractor under the other appropriate work items of this contract and no additional cost except as provided herein will be allowed.

1.19 OPERATION AND MAINTENANCE (O&M) DATA

1.19.1 General

The requirements contained herein are in addition to all shop drawings submission requirements stated in other sections of the specifications. The Contractor shall include the provisions for all items required under this clause in all purchase orders and sub-contract agreements. Submittals required hereinafter will not relieve the Contractor of any responsibilities under the Warranty of Construction Provisions of this contract or under the various Guarantee Clauses of the Technical Provisions.

1.19.2 Submittals

The Contractor shall submit all items requiring submission of O&M data under this and other sections of these specifications in accordance with Section 01335 SUBMITTAL PROCEDURES FOR DESIGN/BUILD of the specifications.

1.19.3 Operation and Maintenance (O&M) Data

The Contractor shall furnish operation and maintenance manuals for all facilities constructed under this contract. The manuals shall be loose leaf, indexed and shall consist of manufacturer's brochures, manufacturer's operation and maintenance manuals, service and repair manuals, catalogs, service bulletins, instruction charts, diagrams, other information as necessary to support the operation and maintenance of the end items of equipment, assemblies and systems. Each type of facility (housing, barracks, mosque, etc.) shall be covered by a separate manual (or manuals) consisting of all data pertaining to the equipment and/or systems within that facility. Identical equipment within a single major system shall require only one submittal of data. The Contractor shall furnish all O&M manuals to the Contracting Officer not less than thirty (30) calendar days prior to contract completion. Required number

of submittals (number of sets) shall be as specified in Section 01335 SUBMITTAL PROCEDURES FOR DESIGN/BUILD.

1.19.4 Recommended Spare Parts List

The Contractor shall furnish a recommended spare parts list containing equipment manufacturers' recommendations for five (5) years; two (2) years and one (1) year spare parts stock levels in Afghanistan. Current unit price and effective date, lead time, shelf life for each individual part, and total cost of all recommended parts shall be furnished.

1.19.5 Supplemental Submittals of Data

After initial submittal of O&M manuals and until final acceptance of all equipment, the Contractor shall prepare and deliver to the Contracting Officer supplemental technical data as previously described for all changes, modifications, revisions and substitutions to equipment and components. For equipment or systems introduced into the contract under change order, or modified by change order, supplemental data shall be furnished within forty-five (45) calendar days after issuance of the change order. The supplemental data furnished shall be properly prepared and identified for insertion into the O&M manuals.

1.19.6 Framed Instructions for Systems

Approved wiring and control diagrams showing the complete layout of the entire system, including equipment, piping, valves and control sequence, framed under glass or in approved laminated plastic, shall be posted, where applicable, in all mechanical equipment rooms. In addition, detailed operating instructions explaining safe starting and stopping procedures for all systems shall be prepared in typed form along with the inspections required to insure normal safe operations. The instructions shall be framed as specified above for the wiring and control diagrams and posted beside the diagram. Proposed diagrams, instructions, and other sheets shall be submitted for approval prior to posting. Operating instructions shall be posted before acceptance testing of the systems and verified during acceptance testing.

1.19.7 Additional Submittals/Re-submittals

The Contracting Officer reserves the right to determine whether the above specified information, as furnished by the Contractor, is adequate and complete and to require such additional submittals by the Contractor as necessary to insure that adequate information has been furnished to provide the satisfactory operation and maintenance of the various items of equipment and to fulfill the intent of the specifications. Additional submittals or resubmittals supplementing incorrect or incomplete data shall be made within thirty (30) calendar days after receiving notice by the Contracting Officer. All costs arising from these resubmissions shall be borne by the Contractor.

1.20 INSTRUCTIONS AND TRAINING FOR OPERATION AND MAINTENANCE

1.20.1 General

The Contractor shall be responsible for the instruction and training of operating and maintenance personnel as specified below and in the Technical Provisions of the specifications. Unless otherwise indicated in the Technical Provisions, operating and maintenance instructions shall be given for a minimum period as follows:

Title	Duration of Training
Mechanical Systems	10 Days
Electrical Systems	10 Days

1.20.2 Operation and Maintenance Training

The Contractor shall provide competent instructors for training of personnel designated by the Contracting Officer to operate mechanical and electrical building systems and equipment, perform the required preventive maintenance to minimize breakdown, and to perform necessary repairs when malfunction or breakdown of equipment occurs. Such training shall consist of classroom and on-the-equipment training for the period specified, which shall be completed prior to acceptance of a system or equipment, as applicable. The instructor(s) shall have no other duties during the period of training. Classroom instruction shall not exceed fifty percent (50%) of the total training time, with the balance devoted to on-the-equipment demonstration and familiarization. Emphasis will be given to both electrical and mechanical features, in accordance with approved training plans.

1.20.3 Arrangements

The training shall be for not less than the periods of time specified, five (5) days per week, and eight (8) hours per day, subject to review and approval by the Contracting Officer. Each individual training session shall be presented one time only, shall be video taped in a television system compatible with the local area, and be scheduled in a manner acceptable to the Contracting Officer. At the completion of training, the videotapes shall become the property of the Government. In addition to the Contractor's requirements to video tape each training section, the Government reserves the right to record, in any manner, the subject training material, or training sessions given by the Contractor, without additional cost to the Government.
Recordings obtained will be used in future training by the Government. The operating and maintenance manual data, as specified to be furnished in these Special Clauses, shall be used as the base material for training.

1.20.4 Scheduling

The Contractor shall contact the Contracting Officer for the purpose of preliminary planning, scheduling, and coordination of training, to maximize effectiveness of the training program for available operating and maintenance personnel. The Contractor shall initiate and make arrangements for such contact within thirty (30) calendar days after receipt of notification of award of contract; and shall include all significant times in scheduling and completing training in his PROJECT SCHEDULE. The Contractor shall provide a draft outline of training outline in sufficient detail to provide a broad indication of the type of scope of training to be given. It shall include but not be limited to; (a) a list of subjects to be presented; (b) estimated amounts of classroom and on-the-equipment instruction for each subject; (c) a list of minimum qualifications for instructors; and (d) discussions concerning the types and amounts of visual aids, reference materials, tools and test equipment, mock-up and other training materials that will be employed during training.

1.20.5 Preliminary Plan

The Contractor shall submit seven (7) copies of an outline of his proposed training plan to the Contracting Officer for review and approval not later than 60 calendar days after award of this contract. The plan will be reviewed and coordinated with the content of the O&M manuals.

1.20.6 Plan

The Contractor shall submit seven (7) copies of his proposed training plan to the Contracting Officer for approval not later than thirty (30) calendar days prior to start of any training. The plan shall include the following; (a) a weekly outline showing overall form and design of training presentation; (b) a day-by-day schedule showing time intervals, the major and subordinate subjects to be covered in each, the name of the instructor(s) and qualification summary of each, and identification of related handouts; (c) summary of the number of hours of classroom and on-the-equipment training; (d) a list of reference materials to be provided by the Contractor to the trainees; and (e) a list and description of the training materials to be used, such as text, visual aids, mock-up, tools, etc. The Contractor shall be responsible for furnishing all training materials except the following: The Government will provide space, chairs, and tables for

classroom training, and three (3) sets of the five (5) sets of O&M Manuals required by the Contractor per Section 01335 SUBMITTAL PROCEDURES FOR DESIGN/BUILD of the specifications. Provision of these manuals is solely for reference purposes, and in no way relieves the Contractor from providing all instruction and materials necessary for training personnel designated by the Government. All costs for resubmission of training plans, training materials, etc., as requested by the Contracting Officer shall be borne by the Contractor. Resubmittals shall be made within twenty (20) days of notice from the Contracting Officer.

1.20.7 Attendance Roster/TAC Form 356

The Contractor shall develop an attendance roster or a similar document indicating each student's attendance, prior to the start of each class, subject and/or topic. This includes both "Hands-On" and classroom training. It is strongly recommended that each student trained be required to sign this document at the beginning of each class day for each and every class, subject and/or topic taught on that day. The Contractor's failure to have student attendance verified in writing may be cause for the Government to order the Contractor to repeat schooling where evidence of attendance cannot be verified. No part of the time lost due to such repeat instruction shall be made the subject of claim for extension of time or for excess costs or damage by the Contractor. Within ten (10) working days after completion of Operation and Maintenance Training conducted in accordance with this clause and/or applicable Technical Provision section, the Contractor shall complete and submit TAC Form 356 "Operation and Maintenance Training Validation Certificate". The attendance roster shall be included as an attachment to TAC Form 356.

1.21 CONTRACTOR FURNISHED EQUIPMENT LISTS

The Contractor shall furnish a list of all items, other than integral construction type items, furnished under the contract. Items such as furniture, drapes, rugs, vehicles, office machines, appliances, etc., shall fall under this category. The Contractor's list shall describe the item; give the unit price and total quantities of each. Model and serial numbers for equipment shall be provided when applicable. The Contractor shall keep an up-to-date register of all covered items and make this information available to the Contracting Officer at all times. Prior to acceptance, the Contractor shall submit the complete register to the Contracting Officer.

1.22 TIME EXTENSIONS

1.22.1 General

This provision specifies the procedure for determination of time extensions for unusually severe weather in accordance with the Contract Clause 52.249-10 entitled DEFAULT (FIXED-PRICE CONSTRUCTION) APR 1984. The listing below defines the anticipated monthly unusually severe weather for the contract period and is based on National Oceanic and Atmospheric Administration (NOAA) or similar data for the geographic location of the project. The schedule of anticipated unusually severe weather will constitute the baseline for determining monthly weather time evaluations. Upon award of this contract and continuing throughout the contract each month, actual unusually severe weather days will be recorded on a calendar day basis (including weekends and holidays) and compared to the monthly anticipated unusually severe weather in the schedule below. The term "actual unusually severe weather days" shall include days actually impacted by unusually severe weather. The Contractor's schedule must reflect the anticipated unusually severe weather days on all weather dependent activities.

MONTHLY ANTICIPATED UNUSUALLY SEVERE WEATHER CALENDAR DAYS

January	4 Days
February	2 Days
March	2 Days
April thru December	0 Days

1.22.2 Time Extensions

The number of actual unusually severe weather days shall be calculated chronologically from the first to the last day in each month. Unusually severe weather days must prevent work for fifty percent (50%) or more of the Contractor's workday and delay work critical to the timely completion of the project. If the number of actual unusually severe weather days exceeds the number of days anticipated in the paragraph above, the Contracting Officer will determine whether the Contractor is entitled to a time extension. The Contracting Officer will convert any qualifying delays to calendar days and issue a modification in accordance with the Contract Clause 52.249-10 entitled DEFAULT (FIXED-PRICE CONSTRUCTION) APR 1984.

1.22.3 Other Delays

Construction delays due to full or partial base closures due to incidents such as demonstrations, civil unrest and outright attacks will be examined on an individual basis for consideration of time extensions.

1.23 STANDARDIZATION

Where two or more items of the same type or class of product, system or equipment furnished in this project are required, the units shall be products of the same manufacturer and shall be interchangeable when of the same size, capacity, performance characteristics, and rating. The only exception to this requirement is where the items are interchangeable due to conformance with industry standards (valves, fittings, etc.); they need not be by the same manufacturer. This requirement applies to all manufactured items in the project that normally require repair or replacement during the life of the equipment.

1.24 COMPLIANCE WITH HOST COUNTRY RULES AND CUSTOMS

The laws of Host Country may prohibit access to certain areas of the country that are under military control. The Contractor shall furnish the Contracting Officer the names of personnel, type, and amounts of equipment, dates and length of time required at the site, and the purpose of entering the host country. It is understood that areas to which rights of entry are provided by the Host Government are to be used only for work carried out under the contract and no destruction or damages shall be caused, except through normal usage, without concurrence of the Host Government.

1.24.1 Contractor's Responsibilities

The following items are the sole responsibility of the Contractor to investigate, estimate as to cost, and assume the risk, as normally encountered by Contractors. The Contractor shall be responsible for determining the effect of the following on his own cost of performance of the contract and for including sufficient amount in the contract price:

a. Official language and type of accounts required to satisfy the officials of the Local Government.

b. Entry and exit visas, residence permits, and residence laws applicable to aliens. This includes any special requirements of the Host Government, including those required by local Labor Offices, which the Contractor may have to fulfill before an application for a regular block of visas will be accepted.

c. Passports, health and immunization certificates, and quarantine clearance.

d. Compliance with local labor and insurance laws, including payment of employer's share of contribution, collecting balance from employee and paying into insurance funds.

e. Strikes, demonstrations and work stoppage.

f. Collection through withholding and payment to local Government, of any Host Country income tax on employees subject to tax.

g. Arranging to perform work in the Host Country, to import personnel, to employ non-indigenous labor, to receive payments and to remove such funds from the country.

h. Operating under local laws, practices, customs and controls, and with local unions, in connection with hiring and firing, mandatory wage scales, vacation pay, severance pay, overtime, holiday pay, 7th day of rest, legal notice or pay in lieu thereof for dismissal of employees, slowdown and curtailed schedules during religious holidays and ratio of local labor employed in comparison to others.

i. Possibility of claims in local bureaus, litigation in local courts, or attachment of local bank accounts.

j. Compliance with workmen's compensation laws and contributions into funds. Provisions of necessary medical service for Contractor employees.

k. Special license required by the local Government for setting up and operating any manufacturing plant in the Host Country, e.g. concrete batching, precast concrete, concrete blocks, etc.

l. Sales within the host country of Contractor-owned materials, and equipment.

m. Special licenses for physicians, mechanics, tradesmen, drivers, etc.

n. Identification and/or registration with local police of imported personnel.

o. Stamp tax on documents, payments and payrolls.

p. Base passes for permanent staff, day laborers, motor vehicles, etc.

q. Compliance with all customs and import rules, regulations and restrictions, including, but not limited to, local purchase requirements.

1.25 IDENTIFICATION OF EMPLOYEE'S PERSONNEL AND VEHICULAR ACCESS TO THE PROJECT SITES

The installation security authority maintains the ultimate authority for establishing, monitoring, and enforcing security requirements for the installation security office. All contractor, subcontractor, or vendor personnel and vehicles at any tier working at any location on the installation are subject to a thorough search upon entering, departing, or at any time deemed necessary by the installation security personnel. The Contractor shall be responsible for compliance with all installation security requirements. The Government reserves the right to deny access or to require the contractor to remove any personnel or equipment deemed to be a threat to the security of the installation security office or the installation personnel. The Contractor shall coordinate with the Contracting Officer to ensure that the installation security regulations are followed.

1.25.1 Employee Identification

The Contractor shall be responsible for furnishing to each employee and for requiring each employee engaged on the work, to display identification as approved and directed by the Contracting Officer. Prescribed identification shall immediately be delivered to the Contracting Officer for cancellation upon release of any employee. When required, the Contractor shall obtain and provide fingerprints of persons employed on the project. Contractor and subcontractor personnel shall wear identifying markings on hard hats clearly identifying the company for whom the employee works.

1.25.1.1 Preparation of Identification Badges

The Contractor shall be required to prepare a written application inclusive color photographs and provide all materials and labor necessary to prepare an identification badge, laminated in plastic, containing the

employee's name, badge number, color photo, height and weight, the name of the Contractor's organization and for requiring each employee engaged on the work to display this identification as directed by the Contracting Officer. The Contractor shall submit each application and draft badge through the Contracting Officer to the Base Security Office. A minimum of thirty-five workdays shall be allowed for Government review and certification of badges. The Base Security Office will certify each draft badge by signature, stamp, seal or any combination thereof. Upon certification by the Base Security Office, the badges will be returned to the Contractor for final preparation, lamination, and issuance. Badges shall not be taken out of country during periods of travel or absence. During such periods, the Contractor may be permitted to issue temporary identification badges.

1.25.1.2 Employee Background and Historical Information

The Contractor shall be required to prepare and maintain personal background and historical information forms on each employee. These forms may be reviewed by the Base Security Office. The required information shall include but not necessarily be limited to the following:

a. Full name.
b. Place and date of birth.
c. Three (3) current color photographs.
d. Copy of Citizenship/Nationality identification.
e. Copy of Passport.
f. Copy of drivers license.
g. Police Background Check.
h. Work History.
i. Personal background information.
j. Copy of Work Permit and/or Visa.
k. Permanent home of record and in-country address.
l. Other information mandated by local law, the Base Security Regulations or that may be required to coordinate and process the necessary documentation with the government offices responsible for the approval.
n. Registration, insurance company, policy number and expiration date for each vehicle.

1.25.2 Identification of Contractor Vehicles

The Contractor shall be responsible for requiring each vehicle engaged in the work to display permanent vehicular identification as approved and directed by the Contracting Officer. If acceptable to the Base Security Office and approved by the Contracting Officer, the Contractor may institute a system of non-permanent temporary identification for one-time delivery and transit vehicles. Each Contractor vehicle, machine, piece of equipment, or towed trailers, shall show the Contractor's name such that it is clearly visible on both front doors of the vehicle and both sides of a towed trailer. A valid license plate shall be displayed at all times. Contractor vehicles operated on Government property shall be maintained in a good state of repair, shall be insured, and shall be registered in accordance with Afghan Law.

1.25.3 Security Plan

The Contractor shall submit to the Contracting Officer, within ten (10) calendar days after award of this contract, his proposed personnel and vehicular access plan. This plan shall cover all elements for issuance of the access passes, safeguarding of passes not issued, construction security operations, lost passes, temporary vehicle passes, and collection of passes for employee's and vehicles on 1)- temporary absence; 2)- termination or release; and 3)- termination or completion of contract. The plan shall address in detail the contractors proposed procedures, and organization necessary to produce and maintain effective security within the contract limits twenty-four (24) hours a day seven (7) days a week.

1.26 RADIO TRANSMITTER RESTRICTIONS

To preclude accidental actuation of sensitive electronic equipment, the Contractor shall not use radio-

transmitting equipment without prior approval of the Contracting Officer.

1.27 ON-BASE PHOTOGRAPHY PROHIBITION

The Contractor shall not engage in any form of photography without prior written approval from the Contracting Officer.

1.28 PUBLIC RELEASE OF INFORMATION

1.28.1 Prohibition

There shall be no public release of information or photographs concerning any aspect of the materials or services relating to this bid, contract, purchase order, or other documents resulting there from without the prior written approval of the Contracting Officer.

1.28.2 Subcontract and Purchase Orders

The Contractor agrees to insert the substance of this clause in all purchase orders and subcontract agreements issued under this contract.

1.29 ATTACHMENTS

TAC FORM 61 - Accident Prevention Program Hazard Analysis

TAC FORM 356 - Operation and Maintenance Training Validation Certificate

PART 2 LOCAL CLAUSES

2.1 APPLICATION OF US CRIMINAL JURISDICTION

Reference DODI 5525.11. The contractor is directed to provide all of its personnel working under this contract, and to require all of its subcontractors to provide their personnel, with written notification that - with the exception of nationals of Afghanistan and those ordinarily resident in Afghanistan - contractor and subcontractor personnel, and the dependents of contractor and subcontractor personnel who are residing with such personnel, may be subject to US criminal jurisdiction as provided for in the Military Extraterritorial Jurisdiction Act, 18 USC 3261-3267; see Section 3267(1)(A)(iii)(I) and (2)(A)(iii). A copy of the notice ***shall be furnished to the contracting officer upon award of the contract***, along with a certification by an authorized company representative attesting to the provision of the notification to contractor personnel.

2.2 ATTACKS FROM HOSTILE ENTITIES

This contract is firm fixed-price. Costs incurred in the performance of project execution that arise from the attacks of hostile entities, such as costs arising from damage to or destruction of contractor equipment and facilities, and damage to or destruction of the project prior to Government acceptance, are the sole responsibility of the contractor. The Government makes no guarantee to provide the contractor with security, and bears no obligation to reimburse the contractor for costs arising from the attacks of hostile entities. When appropriate, the Contracting Officer may provide the contractor with an equitable adjustment with respect to time – but not cost – in accordance with clause 52.249-10; see 52.249-10(b)(1)(i) and (2).

2.3 INSTALLATION ACCESS AND BADGING

This contract is firm fixed-price. It is the responsibility of the contractor to be knowledgeable of and to abide by any and all applicable installation access procedures and requirements, to include any and all badging procedures and requirements that may be necessary for contractor access to the project site. Such procedures and requirements may change over the course of contract performance; it is the responsibility of the contractor to plan accordingly in order to meet its existing obligations under this contract. The US Army Corps of Engineers, Afghanistan Engineer District, neither controls nor is responsible for any such installation access procedures, requirements or changes thereto.

2.4 CUSTOMS CLEARANCE

Reference clauses 52.229-6 and 52.225-13. This contract is firm fixed-price. It is the responsibility of the contractor to be knowledgeable of and to abide by any and all applicable customs clearance procedures and requirements that may be necessary for the transportation of supplies and equipment into Afghanistan. Such procedures and requirements may change over the course of contract performance; it is the responsibility of the contractor to plan accordingly in order to meet its existing obligations under this contract. The US Army Corps of Engineers, Afghanistan Engineer District, neither controls nor is responsible for any such customs clearance procedures, requirements or changes thereto.

2.5 TRAVEL WARNINGS

The contractor shall provide all personnel working under this contract, and shall require subcontractors to provide their personnel, with a written notification advising such personnel to be aware of US State Department Travel Warnings with respect to Afghanistan, available at http://travel.state.gov, in the event they wish to consider bringing their dependants into Afghanistan. A copy of the notice ***shall be furnished to the contracting officer upon award of the contract***, along with a certification by an authorized company representative attesting to the provision of the notification to contractor personnel. At no time, subject to the written approval of the contracting officer, may the contractor allow such dependants, or any other unauthorized individuals, to be present on the project site grounds, whether in transit or otherwise.

2.6 DRUG-FREE WORKFORCE

Documentation of the contractor's drug-free workforce program as required by clause 252.223-7004(b) ***shall be furnished to the contracting officer upon award of the contract***.

2.7 COMBATING TRAFFICKING IN PERSONS, COMMERCIAL SEX ACTS, FORCED LABOR

A copy of the employee notification statement as required by clause 252.222-7006(d) ***shall be furnished to the contracting officer upon award of the contract***, along with a certification by an authorized company representative attesting to the provision of the notification to contractor personnel.

-- End of Section --

SECTION 01312

QUALITY CONTROL SYSTEM (QCS) FOR SOUTH PARK IMPROVEMENTS

PART 1: GENERAL

1.1 GENERAL

The Government will use the Resident Management System for Windows (RMS) to assist in its monitoring and administration of this contract. The Contractor shall use the Government-furnished Construction Contractor Module of RMS, referred to as QCS, to record, maintain, and submit various information throughout the contract period. The Contractor module, user manuals, updates, and training information can be downloaded from the RMS web site: the Contractor can obtain the current address from the Government. This joint Government-Contractor use of RMS and QCS will facilitate electronic exchange of information and overall management of the contract. QCS provides the means for the Contractor to input, track, and electronically share information with the Government in the following areas:

- Administration
- Finances
- Quality Control
- Submittal Monitoring
- Scheduling
- Import/Export of Data

1.1.1 Correspondence and Electronic Communications

For ease and speed of communications, both Government and Contractor will, to the maximum extent feasible, exchange correspondence and other documents in electronic format. Correspondence, pay requests and other documents comprising the official contract record shall also be provided in paper format, with signatures and dates where necessary. Paper documents will govern, in the event of discrepancy with the electronic version.

1.1.2 Other Factors

Particular attention is directed to specifications “SUBMITTAL PROCEDURES”, “CONTRACTOR QUALITY CONTROL”, "PROJECT SCHEDULE", and Contract Clause, "Payments", which have a direct relationship to the reporting to be accomplished through QCS. Also, there is no separate payment for establishing and maintaining the QCS database; all costs associated therewith shall be included in the contract pricing for the work.

1.2 QCS SOFTWARE

QCS is a Windows-based program that can be run on a stand-alone personal computer or on a network. Prior to the Pre-Construction Conference, the Contractor shall be responsible to download, install and use the latest version of the QCS software from the Government's RMS Internet Website. Any program updates of QCS will be made available to the Contractor via the Government RMS Website as they become available. It shall be the responsibility of the contractor to maintain the QCS software and install updates as they become available.

1.3 SYSTEM REQUIREMENTS

The following listed hardware and software is the minimum system configuration that the Contractor shall have to run QCS. No separate payment shall be made for updating or maintaining the necessary hardware configurations necessary to run QCS:

Hardware

IBM-compatible PC with 1000 MHz Pentium or higher processor
256+ MB RAM for workstation / 512+ MB RAM for server
1 GB hard drive disk space for sole use by the QCS system
Digital Video Disk (DVD)-Compact Disk (CD) Reader-Writer (RW/ROM)
Monitor with a resolution of AT LEAST 1024x768, 16bit colors
Mouse or other pointing device
Windows compatible printer. (Laser printer must have 4 MB+ of RAM)
Connection to the Internet, minimum 56k BPS

Software

MS Windows 2000 or higher
QAS-Word Processing software: MS Word 2000 or newer
Internet browser supporting HTML 4.0 or higher
Electronic mail (E-mail) MAPI compatible
Virus protection software regularly upgraded with all issued manufacturer's updates

1.4 RELATED INFORMATION

1.4.1 QCS User Guide

After contract award, the Contractor shall download instructions for the installation and use of QCS from the Government RMS Internet Website; the Contractor can obtain the current address from the Government. In case of justifiable difficulties, the Government will provide the Contractor with a CD-ROM containing these instructions.

1.4.2 Contractor Quality Control (CQC) Training

The use of QCS will be discussed with the Contractor's QC System Manager during the mandatory CQC Training class. The government will provide QCS training if requested by the contractor.

1.5 CONTRACT DATABASE

Prior to the pre-construction conference, the Government shall provide the Contractor with basic contract award data to use for QCS. The Government will provide data updates to the Contractor as needed, generally by files attached to E-mail or via CD-ROM. These updates will generally consist of submittal reviews, correspondence status, QA comments, and other administrative and QA data.

1.6 DATABASE MAINTENANCE

The Contractor shall establish, maintain, and update data for the contract in the QCS database throughout the duration of the contract. Data updates to the Government shall be submitted via either E-mail or electronic media with printed/file attachments, e.g., daily reports, schedule updates, payment requests. If permitted by the Contracting Officer. The QCS database typically shall include current data on the following items:

1.6.1 Administration

1.6.1.1 Contractor Information

The database shall contain the Contractor's name, address, telephone numbers, management staff, and other required items. Within 14 calendar days of receipt of QCS software from the Government, the Contractor shall deliver Contractor administrative data in electronic format via E-mail.

1.6.1.2 Subcontractor Information

The database shall contain the name, trade, address, phone numbers, and other required information for all subcontractors. A subcontractor must be listed separately for each trade to be performed. Each subcontractor/trade shall be assigned a unique Responsibility Code, provided in QCS. Within 14 calendar days of receipt of QCS software from the Government, the Contractor shall deliver subcontractor administrative data in electronic format via E-mail.

1.6.1.3 Correspondence

All Contractor correspondence to the Government shall be identified with a serial number. Correspondence initiated by the Contractor's site office shall be prefixed with "S". Letters initiated by the Contractor's home (main) office shall be prefixed with "H". Letters shall be numbered starting from 0001. (e.g., H-0001 or S-0001). The Government's letters to the Contractor will be prefixed with "C".

1.6.1.4 Equipment

The Contractor's QCS database shall contain a current list of equipment planned for use or being used on the jobsite, including the most recent and planned equipment inspection dates.

1.6.1.5 Management Reporting

QCS includes a number of reports that Contractor management can use to track the status of the project. The value of these reports is reflective of the quality of the data input, and is maintained in the various sections of QCS. Among these reports are: Progress Payment Request worksheet, QA/QC comments, Submittal Register Status, Three-Phase Inspection checklists.

1.6.2 Finances

1.6.2.1 Pay Activity Data

The QCS database shall include a list of pay activities that the Contractor shall develop in conjunction with the construction schedule. The sum of all pay activities shall be equal to the total contract amount, including modifications. Pay activities shall be grouped by Contract Line Item Number (CLIN), and the sum of the activities shall equal the amount of each CLIN. The total of all CLINs equals the Contract Amount.

1.6.2.2 Payment Requests

All progress payment requests shall be prepared using QCS. The Contractor shall complete the payment request worksheet and include it with the payment request. The work completed under the contract, measured as percent or as specific quantities, shall be updated at least monthly. After the update, the Contractor shall generate a payment request report using QCS. A signed paper copy of the approved payment request is also required, which shall govern in the event of discrepancy with the electronic version.

1.6.3 Quality Control (QC)

QCS provides a means to track implementation of the 3-phase QC Control System, prepare daily reports, identify and track deficiencies, document progress of work, and support other contractor QC requirements. The Contractor shall maintain this data on a daily basis. Entered data will automatically output to the QCS generated daily report.

1.6.3.1 Daily Contractor Quality Control (CQC) Reports.

QCS includes the means to produce the Daily CQC Report. The Daily CQC Report generated by QCS shall be the Contractor's official report. Data from any supplemental reports by the Contractor shall be summarized and consolidated onto the QCS-generated Daily CQC Report. Daily CQC Reports shall be submitted as required by specification 01451 “CONTRACTOR QUALITY CONTROL”.

1.6.3.2 Deficiency Tracking.

The Contractor shall use QCS to track deficiencies. Deficiencies identified by the Contractor will be numerically tracked using QC punch list items. The Contractor shall maintain a current log of its QC punch list items in the QCS database. The Government will log the deficiencies it has identified using its QA punch list items. The Government's QA punch list items will be included in its export file to the Contractor. The Contractor shall regularly update the correction status of both QC and QA punch list items.

1.6.3.3 Three-Phase Control Meetings

The Contractor shall maintain scheduled and actual dates and times of preparatory and initial control meetings in QCS.

1.6.3.4 Accident/Safety Tracking.

The Government will issue safety comments, directions, or guidance whenever safety deficiencies are observed. The Government's safety comments will be included in its export file to the Contractor. The Contractor shall regularly update the correction status of the safety comments. In addition, the Contractor shall utilize QCS to advise the Government of any accidents occurring on the jobsite. This brief supplemental entry is not to be considered as a substitute for completion of mandatory reports.

1.6.3.5 Features of Work

The Contractor shall include a complete list of the features of work in the QCS database. A feature of work may be associated with multiple pay activities. However, each pay activity (see subparagraph "Pay Activity Data" of paragraph "Finances") will only be linked to a single feature of work.

1.6.3.6 QC Requirements

The Contractor shall develop and maintain a complete list of QC testing, transferred and installed property, and user training requirements in QCS. The Contractor shall update all data on these QC requirements as work progresses, and shall promptly provide this information to the Government via QCS.

1.6.4 Submittal Management

The Contractor shall maintain a complete list of all submittals, including completion of all data columns. Dates on which submittals are received and returned by the Government will be included in its export file to the Contractor. The Contractor shall use QCS to track and transmit all submittals. ENG Form 4025, submittal transmittal form, and the submittal register update, ENG Form 4288, shall be produced using QCS. RMS will be used to update, store and exchange submittal registers and transmittals, but will not be used for storage of actual submittals.

1.6.5 Schedule

The Contractor shall develop a construction schedule consisting of pay activities, in accordance with Specification Section Project Schedule. This schedule shall be input and maintained in the QCS database either manually or by using the Standard Data Exchange Format (SDEF). The updated schedule data shall be included with each pay request submitted by the Contractor.

1.6.6 Requests for Information (RFI)

The Contractor shall use the two-way RFI system contained in QCS for tracking all RFI’s generated during the contract. Hard copies of all RFI’s shall be provided to the government, and will govern in the event of a discrepancy between electronic and printed mediums.

1.6.7 Import/Export of Data

QCS includes the ability to export Contractor data to the Government and to import submittal register and other Government-provided data, and schedule data using SDEF.

1.7 IMPLEMENTATION

Contractor use of QCS as described in the preceding paragraphs is mandatory. The Contractor shall ensure that sufficient resources are available to maintain its QCS database, and to provide the Government with regular database updates. QCS shall be an integral part of the Contractor's management of quality control.

1.8 DATA SUBMISSION VIA COMPUTER DISKETTE OR CD-ROM

The Government-preferred method for Contractor's submission of updates, payment requests, correspondence and other data is by E-mail with file attachment(s). For locations where this is not feasible, the Contracting Officer may permit use of computer diskettes or CD-ROM for data transfer. Data on the disks or CDs shall be exported using the QCS built-in export function.

1.9 MONTHLY COORDINATION MEETING

The Contractor shall update the QCS database each workday. At least monthly, the Contractor shall generate and submit an export file to the Government with schedule update and progress payment request. As required in Contract Clause "Payments", at least one week prior to submittal, the Contractor shall meet with the Government representative to review the planned progress payment data submission for errors and omissions. The Contractor shall make all required corrections prior to Government acceptance of the export file and progress payment request. Payment requests accompanied by incomplete or incorrect data submittals will be returned. The Government will not process progress payments until an acceptable QCS export file is received.

1.10 NOTIFICATION OF NONCOMPLIANCE

The Contracting Officer will notify the Contractor of any detected noncompliance with the requirements of this specification. The Contractor shall take immediate corrective action after receipt of such notice. Such notice, when delivered to the Contractor at the work site, shall be deemed sufficient for the purpose of notification.

-- End of Section --

SECTION 01321

PROJECT SCHEDULE FOR SOUTH PARK IMPROVEMENTS

PART 1 GENERAL

1.1 SUBMITTALS

The following shall be submitted for Government approval in accordance with Section 01335 SUBMITTAL PROCEDURES: SD-07 Schedules Project Schedule; Horizontal Bar Chart and Periodic Payment Request Updates; and Projected Earnings Curve and Periodic Payment Request Updates. Revisions to the Project Schedule and Projected Earnings Curve for Modifications Issued to this Contract shall be coordinated with the Contracting Officer.

PART 2 PRODUCTS (Not Applicable)

PART 3 EXECUTION

3.1 GENERAL

The Contractor shall furnish a Project Schedule as described below. The scheduling of construction shall be the responsibility of the Contractor. Contractor management personnel shall actively participate in its development. Subcontractors and suppliers working on the project should also contribute in developing and maintaining an accurate Project Schedule. The approved Project Schedule shall be used to measure the progress of the work, to aid in evaluating time extensions, and to provide the basis of all progress payments.

3.2 BASIS FOR PAYMENT

The schedule shall be the basis for measuring Contractor progress. Lack of an approved schedule or scheduling personnel shall result in an inability of the Contracting Officer to evaluate Contractor progress for the purposes of payment. Failure of the Contractor to provide all information, as specified below, shall result in the disapproval of the entire Project Schedule submission and the inability of the Contracting Officer to evaluate Contractor progress for payment purposes. In the case where Project Schedule revisions have been directed by the Contracting Officer and those revisions have not been included in the Project Schedule, then the Contracting Officer may hold retainage up to the maximum allowed by contract, each payment period, until revisions to the Project Schedule have been made.

3.3 PROJECT SCHEDULE

3.3.1 Schedule of Construction

Within seven (7) calendar days after notice to proceed, the Contractor shall prepare and submit a Construction Schedule to the Contracting Officer for approval. This schedule shall address each payment line item and/or sub-line item listed in the Proposal Schedule separately.

3.3.2 Non-Compliance

Failure of the Contractor to comply with the requirements of the Contracting Officer shall be grounds for determination by the Contracting Officer that the Contractor is not prosecuting the work with sufficient diligence to ensure completion within the time specified in the contract. Upon making this determination, the Contracting Officer may terminate the Contractor's right to proceed with the work, or any separable part of it, in accordance with the default terms of this contract.

3.3.3 Horizontal Bar Chart

The required schedule shall utilize an automated scheduling program and shall be in the form of a horizontal bar chart. The line or sub-line item schedule of activities shall be listed down the left side of the page. A time scale shall run across the bottom of the page. Each work item shall be represented by a bar starting with the schedule start date and running continuously to the completion date.

3.3.4 Cost

Listed with each work item shall be a corresponding cost representing the total cost, such as material, labor, equipment, and overhead associated with that item. The total cost of the work items shall be equal to the Bid Price for that sub-line item of the Proposal Schedule.

3.3.5 Scheduled Project Completion

The schedule interval shall extend from Notice-To-Proceed to the contract completion date.

3.3.6 Projected Earning Curve

Submitted with the Construction Schedule shall be a Projected Earning Curve. The Projected Earning Curve is a plot of the Contractor's earnings on the vertical axis and the contract duration on the horizontal axis. The earnings figure shall relate to the complete value of the contract and need not reflect each facility separately.

3.3.7 Construction Schedule

The Construction Schedule shall be on one page with a maximum dimension of 90 cm by 120 cm. The Contractor shall submit the Projected Earnings Curve on the same page. The initial submittal shall include one (1) reproducible and four (4) copies, one (1) copy of which will be returned to the Contractor when approved.

3.3.8 Submission With Partial Payment Estimate

Each time the Contractor submits a payment request under this contract he shall also submit three (3) copies of the Bar Chart. The Bar Chart shall be annotated by indicating the percent complete for each activity directly on the bar. The Projected Earnings Curve shall be annotated by plotting actual earnings versus time on the same graph. Those work items reflecting performance which is behind schedule by fifteen (15) calendar days or more shall be fully explained in detail giving the reason for delay and the Contractor's plan for timely completion within the schedule.

3.3.9 Modifications

The Construction Schedule and Projected Earning Curve shall be revised to reflect any and all modifications issued to this contract as they are issued. Format and numbers of copies as defined in paragraph CONSTRUCTION SCHEDULE shall be submitted for approval by the Contracting Officer.

3.4 PERIODIC PROGRESS MEETINGS

Progress meetings to discuss payment shall include a twice monthly on-site meeting or shall be conducted at other regular intervals mutually agreed to at the preconstruction conference. During this meeting the Contractor shall describe, on an activity-by-activity basis, all proposed revisions and adjustments to the project schedule required to reflect the current status of the project. The Contracting Officer will approve activity progress, proposed revisions, and adjustments as appropriate.

3.4.1 Update Submission Following Progress Meeting

A complete update of the project schedule containing all approved progress, revisions, and adjustments, based on the regular progress meeting, shall be submitted not later than four (4) working days after the monthly progress meeting.

3.4.2 Progress Meeting Contents

Update information, including Actual Start Dates, Actual Finish Dates, Remaining Durations, and Cost to Date, shall be subject to the approval of the Contracting Officer.

3.4.3 Earnings Report

A compilation of the Contractor's Total Earnings on the project from the Notice-to-Proceed until the most recent Monthly Progress Meeting shall be recorded. This report shall reflect the Earnings of specific activities based on the agreements made in the field and approved between the Contractor and the Contracting Officer at the most recent Monthly Progress Meeting. Provided that the Contractor has provided a complete schedule update, this report shall serve as the basis of determining Contractor Payment. This report shall: sum all activities and provide a percent complete by individual activity and total project percent complete. The report shall contain, for each activity: activity identification, activity description, original budgeted amount, total quantity, quantity to date, percent complete (based on cost), and earnings to date.

3.4.4 Cost Completion

The earnings for each activity started shall be reviewed. Payment shall be based on earnings for each in-progress or completed activity. Payment for individual activities shall not be made for work that contains quality defects. A portion of the overall project amount may be retained based on delays of activities.

3.4.5 Network Analysis System

The Contractor may, as an option, submit to the Contracting Officer for approval, a time related network analysis in lieu of the previously specified bar chart.

-- End of Section --

SECTION 01335

SUBMITTAL PROCEDURES FOR DESIGN-BUILD PROJECTS FOR SOUTH PARK IMPROVEMENTS

PART 1 GENERAL

1.1 REFERENCE

The publication listed below forms a part of this specification to the extent referenced. The publication is referenced to in the text by basic designation only.

CONSTRUCTION SPECIFICATIONS INSTITUTE

Manual of Practice
Construction Specifications Institute
http://www.csinet.org/s_csi/index.asp
601 Madison Street
Alexandria, Virginia
22314-1791

NATIONAL INSTITUTE OF BUILDING SCIENCES (NIBS)

Unified Master Reference List (UMRL)
National Institute of Building Sciences
1090 Vermont Avenue, NW, Suite 700
Washington, DC 20005-4905
Email: nibs@nibs.org
FAX: (202) 289-1092
Tele: (202) 289-7800

AFGHANISTAN ENGINEER DISTRICT

AFGHANISTAN ENGINEER DISTRICT
http://www.aed.usace.army.mil
U.S. Army Corps of Engineers
Attn.: Qalaa House
APO AE 09356

TRANSATLANTIC PROGRAMS CENTER

Design Instructions Manual

U.S. Army Corps of Engineers
http://www.tac.usace.army.mil/extranet/

Transatlantic Programs Center
201 Prince Frederick Drive
Winchester, Virginia 22602

1.2 SUBMITTAL CLASSIFICATION

Submittals are classified as follows.

1.2.1 DESIGN SUBMITTALS

Contractor Furnished design submittals are the various design documents which primarily consist of field investigations, calculations, design analysis, drawings and specifications. The Design-Build Contractor shall not begin construction work until the Government has reviewed the Design-Build Contractor's concept, intermediate and final designs and has cleared them for construction. Clearance for construction shall not be construed as meaning Government approval. Unless otherwise indicated, the risk for the design is the sole responsibility of the Design-Build Contractor.

There are 3 distinct facility sites associated with this project: (1) RSOI and Admin/MWR facility (2) Class I Warehouse and (3) Entry Control Point (ECP). Each site has unique submittal requirements listed below:

As a minimum for the Class I Warehouse and RSOI Barrack (Admin/MWR building only) projects, design submittals shall be submitted at the following intervals:

General design - 65%

Final design review - 99%

Cleared For Construction review - 100%

As a minimum for the RSOI Barrack (barracks portion only) projects, design submittals shall be submitted at the following intervals:

Final design review - 99%

Cleared For Construction review - 100%

As a minimum for the Entry Control Point, design submittals shall be submitted at the following intervals:

Concept design - 35%

General design - 65%

Final design review - 99%

Cleared For Construction review - 100%

Minimum submission requirements for each phase noted above are further defined in Paragraph 3.9 DESIGN STAGES.

Additional requirements for As-Built drawing requirements are further defined in Section 01780A CLOSEOUT SUBMITTALS, Paragraph 1.2.1.

For design reviews the standard Corps of Engineers method of review is through DrChecks through Projnet https://www.projnet.org/projnet/binKornHome/index.cfm All of AED Design Submittal reviews shall be done through DrChecks$_{SM}$. The Afghanistan Engineer District will complete a review at each of the above design stages and document all comments in DrChecks$_{SM}$. Each of the DrChecks$_{SM}$ comments shall be reviewed by the appropriate Design-Build Contractor discipline to ensure that the comment has been adequately addressed. A Design-Build Contractor response to any DrChecks$_{SM}$ comment of “will comply” is not sufficient. Responses shall describe how the comment was addressed, the applicable drawings sheet which the comment was incorporated and any additional comments and references to the adequacy for the rebuttal.

1.2.2 CONSTRUCTION SUBMITTALS

1.2.2.1 Contractor Furnished Government Approved Construction Submittals (GA)

Government approved construction submittals are primarily related to plans (Contractor Quality Control, Accident Prevention, Resident Management System, Area Use, etc.) schedules (Project Schedule/Network Analysis), and certificates of compliance. They may also include proposed variations to approved design documents in accordance with the paragraph entitled "VARIATIONS".

In addition, GA construction submittals are required for the following:

CIVIL FEATURES

TESTING RESULTS: Data will include information on the locations and depths of all viable water supply sources at the site(s) involved and a water quantity and water quality analysis for each source from the Ministry of Public Health or other certified testing firm.

MECHANICAL FEATURES

EQUIPMENT SUBMITTALS: Manufacturer's standard catalog data, installation, Operation and Maintenance (O&M) manuals and construction details for water wells, water tanks, control valves, pipe insulation, water pumps, air handling units, condensers, variable air volume (VAV) boxes.

TESTING RESULTS: For water tanks, water pumps (including instrumentation), water piping, sprinkler systems, and oxygen systems, submit six (6) copies of each test containing the following information in bound letter-size booklets:

1) The date the tests were performed. 2) A list of equipment used, with calibration certifications. 3) A copy of measurements taken. 4) The parameters to be verified. 5) The condition specified for the parameter. 6) The inspection results, signed, dated, and certified by the installer. The certification shall state that required procedures were accomplished, that the procedures were conducted in compliance the plans and specifications. 7) A description of adjustments performed.

Individual reports shall be provided for storage tank tests, piping tests, system performance tests, high level alarm test, and the system leak tests. Drawings shall be folded blue lines, with the title block visible.

ELECTRICAL FEATURES

PRODUCT DATA and SHOP DRAWINGS: generators (and its auxiliaries), load bank, transformers, substations, panels/switchboards/motor control centers, lightning protection, receptacles, circuit breakers.

DESIGN DATA: lightning protection and grounding.

TEST DATA: Lightning protection and grounding.

ARCHITECTURAL FEATURES

PRODUCT DATA/CATALOGUE CUTS/SHOP DRAWINGS/SCHEDULES: Specialty doors and frames (fire rated, sound rated, bullet resistant, security, overhead rolling); door hardware; windows; metal roofing (including fasteners, flashing, and accessories); building insulation; fire-rated and water-resistant gypsum board; and other specialty products (bullet resistant glazing/panels).

COLOR BOARD: Architectural finishes

PRODUCT DATA/CATALOGUE CUTS/INSTALLATION INSTRUCTIONS: Exterior Insulation and Finish System (EIFS)

SHOP DRAWINGS: Casework/Cabinetry

1.2.2.2 For Information Only Construction Submittals (FIO)

All submittals not requiring Designer of Record or Government approval will be for information only. These construction submittals shall be checked, stamped, signed and dated by the Design-Build Contractor's Quality Control Engineer, certifying that such submittal complies with the contract requirements. All Design-Build

Contractor submittals shall be subject to review by the Government at any time during the course of the contract. Any Contractor submittal found to contain errors or omissions shall be resubmitted as one requiring "approval". No adjustment for time or money will be allowed for corrections required as a result of noncompliance with plans or specifications. Normally submittals For Information Only will not be returned. Approval of the Contracting Officer is not required on FIO submittals. These submittals will be used for information purposes. The Government reserves the right to require the Design-Build Contractor to resubmit any item found not to comply with the contract. This does not relieve the Design-Build Contractor from the obligation to furnish material conforming to the plans and specifications and will not prevent the Contracting Officer from requiring removal and replacement if nonconforming material is incorporated in the work.

1.3 SUBMITTAL CERTIFICATION

The CQC organization shall be responsible for certifying that all submittals and deliverables have been reviewed in detail for completeness, are correct, and are in strict conformance with the contract drawings, specifications, and reference documents.

1.3.1 Effective Quality Control System

The Design-Build Contractor is responsible for quality control and shall establish and maintain an effective quality control system in compliance with Contract Clause 52.236-21 SPECIFICATIONS AND DRAWINGS FOR CONSTRUCTION - ALTERNATE I, and SECTION 01451 CONTRACTOR QUALITY CONTROL.

1.3.1.1 Organizational Responsibility

The quality control system shall cover all design, construction, subcontractor, manufacturer, vendor, and supplier operations at any tier, both onsite and offsite.

1.3.1.2 CQC System Manager Review and Approval

Prior to submittal, all items shall be checked and approved by the Design-Build Contractor's Quality Control (CQC) System Manager. If found to be in strict conformance with the contract requirement, each item shall be stamped, signed, and dated by the CQC System Manager. Copies of the CQC organizations review comments indicating action taken shall be included within each submittal.

1.3.1.3 Determination of Compliance

Each submittal shall be complete and in sufficient detail to allow ready determination of compliance with contract requirements by the Contracting Officer. The contractor shall submit all required documentation with submittals. The U.S. Army Corps of Engineer (USACE) will not accept partial submittals.

1.3.2 Responsibility for Errors or Omissions

It is the sole responsibility of the Design-Build Contractor to ensure that submittals do or do not comply with the contract documents. Government review, clearance for construction, or approval by the Contracting Officer shall not relieve the Design-Build Contractor from responsibility for any errors or omissions in such drawings, nor from responsibility for complying with the requirements of this contract.

1.3.2.1 Government Review

Government review, clearance for construction, or approval of post design construction submittals shall not be construed as a complete check, but will indicate only that the general method of construction, materials, detailing and other information are satisfactory.

1.3.3 Substitutions

After design submittals have been reviewed and cleared for construction by the Contracting Officer, no resubmittal for the purpose of substituting materials or equipment will be considered unless justified as indicated in the paragraph entitled VARIATIONS.

1.3.4 Additional Submittals

In conjunction with Contract Clause 52.236-5 MATERIAL AND WORKMANSHIP, the Contracting Officer may request submittals in addition to those specified when deemed necessary to adequately describe the work.

1.3.5 Untimely and Unacceptable Submittals

If the Design-Build Contractor fails to submit submittals in a timely fashion, or repetitively submits submittals that are incomplete or not in strict conformance with the contract documents, no part of the time lost due to such actions shall be made the subject of claim for extension of time or for excess costs or damages by the Design-Build Contractor.

1.3.6 Stamps

Stamps shall be used by the Design-Build Contractor on all design and post design construction submittals to certify that the submittal meets contract requirements and shall be similar to the following:

Design-Build Contractor (Firm Name)
Contract Number
Contract Name

I certify that this submittal accurate, is in strict conformance with all contract requirements, has been thoroughly coordinated and cross checked against all other applicable disciplines to prevent the omission of vital information, that all conflicts have been resolved, and that repetition has been avoided and, it is complete and in sufficient detail to allow ready determination of compliance with contract requirements by the Contracting Officer.

Name of CQC System Manager: _____

Signature of CQC System Manager: _____

Date: _____

1.4 ENGLISH LANGUAGE

All specifications, drawings, design analysis, design calculations, shop drawings, catalog data, materials lists, and equipment schedules submitted shall be in the English language. However, the local language of host country shall be added to project As-Built drawings.

1.5 UNITS OF MEASUREMENT

Design documents shall be prepared in accordance with the guidance offered in SECTION 01415 METRIC MEASUREMENTS.

The metric units used are the International System of Units (SI) developed and maintained by the General Conference on Weights and Measures (CGPM); the name International System of Units and the international abbreviation SI were adopted by the 11th CGPM in 1960.

1.5.1 Drawings

1.5.1.1 Site Layout

All site layout data shall be dimensioned in meters or coordinates, as appropriate. All details and pipe sizes shall be dimensioned in millimeters.

EXAMPLE: Masonry openings shall be a U.S. module to suit a standard U.S. door. The dimensions of the opening shall be given in SI units. Metric dimensions for site plans shall be in meters and fraction thereof. Dimensions for all other drawings shall be in millimeters using hard metric designations (example: 12 meters = 12 000). Hard metric is defined as utilizing standard metric products and the use of measurements in increments of fifty (50) and one hundred (100) millimeters.

1.5.1.2 Geo-reference

All site plans shall be geo-referenced using the WGS 1984 coordinate system, specifically the following: WGS 1984 UTM one 42 N. If the designer is not able to use the stated coordinate system the coordinate system used shall be correlated to the stated coordinate system. A table shall be provided within the site drawing set cross referencing the WGS84 system to that utilized. This is required to allow AED to incorporate the plans into GIS for storage, map production, and possible geospatial analysis of the different work sites.

1.5.2 Design Calculations

Calculations shall be in SI units to meet the requirements of the design. Quantities on the contract drawings stated in SI units, shall also be stated in SI units in the design analysis to match the drawings.

1.5.3 Specifications

All equipment and products shall be specified according to U.S. standards and described by appropriate units as required herein.

1.6 WITHHOLDING OF PAYMENT FOR SUBMITTALS

1.6.1 Design Submittals

Payment for Design work will not be made in whole or in part until the Government has reviewed and cleared the design for construction.

1.6.2 Construction Submittals

Payment for materials incorporated in the work will not be made if required approvals have not been obtained. In event under separate clause of the contract, the Design-Build Contractor is allowed partial or total invoice payment for materials shipped from the Continental United States (CONUS), and/or stored at the site, the Design-Build Contractor shall with his request for such payment, submit copies of approvals (ENG Form 4025) certifying that the materials that are being shipped and/or stored have been approved and are in full compliance with the contract technical specifications.

PART 2 PRODUCTS

2.1 GENERAL

The following are contract deliverables which expound upon and finalize the design parameters/requirements outlined within the contract documents. They shall be prepared in such a fashion that the Prime Contractor is responsible to the Government and not as an internal document between the Prime Contractor and its Subcontractors, Vendors, Suppliers, etc.

2.2 PROJECT NARRATIVE

The Project Narrative shall be a bound set and shall contain the contract Request For Proposal (RFP) Sections 01010 and 01015 (and any additional RFP sections that are appropriate). The RFP Section 01010 and 01015 shall be the latest version. Any subsequent changes to the RFP shall be clearly marked and highlighted with explanation for the changes. The Project Narrative shall also contain the general description of the project and a discussion of the design approach and design features for the project.

2.3 DESIGN ANALYSIS

2.3.1 Submittal

A design analysis, written in the English Language with SI units of measure shall be submitted for review by the Government. The design analysis is a written explanation of the project design which is expanded and revised (updated) as the design progresses. The design analysis shall contain all explanatory material giving the design rationale for any design decisions which would not be obvious to an engineer reviewing the final drawings and specifications. The design analysis contains the criteria for and the history of the project design, including criteria furnished by the Government, letters, codes, references, conference minutes, and pertinent research. Design calculations, computerized and manual, are included in the design analysis. Narrative descriptions of design solutions are also included. Written material may be illustrated by diagrams and sketches to convey design concepts. Catalog cuts and manufacturer's data for all equipment items, shall be submitted. Copies of all previous design phase review comments and the actions assigned to them shall be included with each submission of the design analysis. Specific requirements for the design analysis, listed by submittal phase, are contained hereinafter.

2.3.2 Format

Format of design analysis shall closely match the standard format referenced within the RFP.

2.4 DESIGN CALCULATIONS

When they are voluminous, they shall be bound separately from the narrative part of the design analysis. The design calculations shall be presented in a clean and legible form incorporating a title page and index for each volume. A table of contents, which shall be an index of the indices, shall be furnished when there is more than one volume. The source of loading conditions, supplementary sketches, graphs, formulae, and references shall be identified. Assumptions and conclusions shall be explained. Calculation sheets shall carry the names or initials of the

computer and the checker and the dates of calculations and checking. No portion of the calculations shall be computed and checked by the same person.

2.4.1 Automatic Data Processing Systems (ADPS)

When ADPS are used to perform design calculations, the design analysis shall include descriptions of the computer programs used and copies of the ADPS input data and output summaries. When the computer output is large, it may be divided into volumes at logical division points.

2.4.1.1 Computer Printouts

Each set of computer printouts shall be preceded by an index and by a description of the computation performed. If several sets of computations are submitted, they shall be accompanied by a general table of contents in addition to the individual indices.

2.4.1.2 Preparation of the Description

Preparation of the description which must accompany each set of ADPS printouts shall include the following.

a. Explain the design method, including assumptions, theories and formulae.

b. Include applicable diagrams, adequately identified.

c. State exactly the computation performed by the computer.

d. Provide all necessary explanations of the computer printout format, symbols, and abbreviations.

e. Use adequate and consistent notation.

f. Provide sufficient information to permit manual checks of the results.

2.5 SPECIFICATIONS

Specifications shall be prepared in accordance with the Construction Specifications Institute (CSI) format. The Design-Build Contractor prepared specifications shall include as a minimum, all applicable specification sections referenced by the CSI. Where the CSI does not reference a specification section for specific work to be performed by this contract, the Design-Build Contractor shall be responsible for creating the required specification.

2.5.1 Preparation of Proprietary Non-Generic Design Documents

During the course of design, the designer shall specify specific proprietary materials, equipment, systems, and patented processes by trade name, make, or catalog number. The subsequent use of construction submittals to supplant and/or supplement incomplete design effort is unacceptable. Design submittals containing non-proprietary and/or generic design criteria where proprietary items are available, will be returned for resubmission.

2.5.2 Use of Unified Facilities Guide Specifications (UFGS)

If UFGS are used, it is the sole responsibility of the Design-Build Contractor to prepare these specifications in strict conformance with the paragraph entitled PREPARATION OF PROPRIETARY NON-GENERIC DESIGN DOCUMENTS. UFGS containing non-proprietary and/or generic design criteria, where proprietary items are available, will be returned for resubmission. If the UFGS contains a "SUBMITTALS" paragraph, the Design-Build Contractor shall delete it and incorporate all required information directly into the design documents. Under no circumstances will the Design-Build Contractor be permitted to use submittals and shop drawings to finalize an incomplete design. UFGS (Uniform Federal Guide Specifications) are required for this project when U.S. products and systems are required or used. Current UFGS information may be obtained at the following location: http://www.wbdg.org/ccb/browse_org.php?o=70.

Specifications for UFGS are in SpecsIntact format. SpecsIntact is government sponsored software used to edit specifications for government contracts. The software is available at the following link: http://specsintact.ksc.nasa.gov/index.asp.

2.5.3 Quality Control and Testing

Specifications shall include required quality control and further indicate all testing to be conducted by the Design-Build Contractor, its subcontractors, vendors and/or suppliers.

2.5.4 Ambiguities and indefinite specifications

Ambiguities, indefinite specification requirements (e.g., highest quality, workmanlike manner, as necessary, where appropriate, as directed etc) and language open to interpretation is unacceptable.

2.5.5 Industry Standards

2.5.5.1 U.S. Industry Standards

The Specifications shall be based on internationally accepted U.S. industry Standards. Customarily accepted publications may be found in the UNIFIED MASTER REFERENCE LIST (UMRL) which may be located at the following URL: http://www.hnd.usace.army.mil/techinfo/UFGS/UFGSref.htm.

To access the UMRL select the “Unified Facilities Guide Specifications” tab and scroll down to Unified Master Reference List (UMRL) (PDF version).

Examples of U.S. standards are: National Fire Protection Association (NFPA), International Building Code (IBC), American Concrete Institute (ACI), American Water Works Association (AWWA), ADAAG (ADA Accessibility Guidelines) for Buildings and Facilities, etc. Standards referenced shall be by specific issue; the revision letter, date or other specific identification shall be included.

This document lists publications referenced in the Unified Facilities Guide Specifications (UFGS) of the Corps of Engineers (USACE), the Naval Facilities Engineering Command (NAVFAC), the Air Force Civil Engineer Support Agency (AFCESA), and the guide specifications of the National Aeronautics and Space Administration (NASA). This document is maintained by the National Institute of Building Sciences (NIBS) based on information provided by the agencies involved and the standards producing organizations. The listing is current with information available to NIBS on the date of this publication.

Standards referenced in specifications and drawings prepared by the Design-Build Contractor shall be by specific issue; the revision letter, date or other specific identification shall be included.

2.5.5.2 Non U.S. Industry Standards

If non U.S. industry standards (e.g., codes, regulations, or technical references and norms) are authorized for use under this contract and are incorporated in the Design-Build Contractor's design, one (1) copy of each standard referenced shall be provided to the Government.

Where a U.S. design and/or construction standard cannot be referenced due to non-availability of products and/or systems, another specification format using the CSI guidelines may be utilized for that particular product and/or system. If a majority of the specifications within this project reference non-U.S. products due to availability and/or other factors, the entire set of specifications are not required to be in UFGS and SpecsIntact format.

2.5.6 Incorporation of Government review comments

Subsequent to submission to the Government, the specifications shall be finalized by the incorporation of Government review comments.

2.6 DRAWINGS

Drawings, prepared in the English language with SI units of measure, are a part of each submittal. The working drawings shall be adequately labeled and cross-referenced for review. Complete, thoroughly checked and coordinated contract

drawings shall be submitted. The contract drawings submitted for final review shall include the drawings previously submitted which have been revised and completed as necessary. The Design-Build Contractor shall have incorporated any design review comments generated by previous design review(s), have completed all of his constructability and coordination checks, and have the drawings in a Ready-to-Build condition. The drawings shall be complete at this time and contain all the details necessary to ensure a clear understanding of the work throughout construction.

2.6.1 Drawing Size

Project is required to be in SI units, all drawings shall be prepared in size "A1" sheets (594mm by 841mm). Design submissions may be prepared in half size (279 mm by 420 mm) to save paper and for ease of review. All final contract drawing sets shall be prepared with full size sheets. Drawings shall be trimmed to size if necessary.

2.6.2 Computer Assisted Design and Drafting (CADD)

Computer Assisted Design and Drafting (CADD) is required for all work related to this contract. The CADD deliverables shall meet the requirements of the AEC CAD Standard Release 3.0. Emphasis is on drawings meeting sheet layout standards, level/layer naming standards and sheet naming conventions. CAD standards may be found at the following link:
https://cadbim.usace.army.mil/default.aspx?p=s&t=13&i=4.
Transatlantic Programs Center Design Instructions Manual, Chapter 22 entitled COMPUTER ASSISTED DESIGN AND DRAFTING. The Contractor shall furnish the digital As-Built drawing files in .DWG file format utilizing AutoDesk AutoCAD release 2004 or later. Drawings prepared in any convention other than CADD, must have approval of the Contracting Officer.

2.6.3 Plotter Prepared Original Drawings

Plotter prepared original drawings shall be prepared on 20 pound bond paper, unless otherwise approved and shall be plotted on the matte side. Raster plotters must provide a minimum resolution of 400 dpi while vector plotters shall provide a minimum resolution of 0.0010 inch with an accuracy of +0.1% of the move and a repeatability error of not more than 0.005 inch. Drawings produced from dot matrix plotters are not acceptable. Plots accompanied by the digital design file may be prepared on vellum: translucent bond is not acceptable. Line density shall be equivalent to that produced by black India ink: half-tones and gray scale plots are not acceptable unless otherwise approved. Manual changes to plotted originals are not acceptable.

2.6.4 Half-Size Reduction

Preparation of all work shall accommodate half size reduction unless project is required to meet SI units or shall be instructed otherwise by the Contracting Officer.

2.6.5 Symbols and Abbreviations

Symbols and abbreviations shall be in accordance with AEC CAD Standard Release 2.0 or later /or conform to the symbols used with a CADD program such AutoDesk AutoCAD release 2004 or greater.

2.6.6 Design Discipline Designation Format

Referencing AEC CAD Standard Release 2.0, the drawing package shall be divided into the following proposed divisions as shown in chronological order: (Note: non-compliance with drawing format is reason for re-submittal).

Use the following for AEC CAD Standard Release 2.0:

Discipline Designation	Discipline
C	Civil
A	Architectural
S	Structural
P	Plumbing
M	Mechanical
E	Electrical
F	Fire Protection

Each drawing for the particular facility shall be designated by the discipline designation and sheet number and shall be consecutive within each discipline. AEC CAD Standard, referenced herein, shall be adhered to, especially with regard to sheet naming, numbering and level/layer naming standards. Copies of level/layer naming standards are available at the following locations (in comma delimited format - .CSV) and may be imported into Microstation and/or AutoCAD release 2004 or later:

Public FTP site:
ftp://anonymous:anonymous@ftp.usace.army.mil/pub/aed/Standards/AEC_Nat_CAD_Std/level_libs/
SharePoint site:
https://aedsharepoint.tac.usace.army.mil/C16/Drawings/Document%20Library/AEC_CAD_level_templates.ZIP

2.6.7 Grouping Drawings

A building or individual facility design shall, except for site development drawings, be grouped in the design drawing package so that a single building may be withdrawn by deleting or removing a consecutive block of sheets.

2.6.8 Title and Revision Block

Title and revision block shall match examples shown in **1335a-Attachments-AED**, Figures 1 through 5, furnished as an attachment to this RFP.

2.6.9 Drawing Scales

The scales indicated on the following list shall, in general, be used for all drawings. The Contractor may, at its option, make exceptions to scales indicated, if approved in writing by the Contracting Officer.

Site, Grading and Utility Plans - 1:500, if in SI units

Key Plans as large as practical

Cross Sections/elevations (as large scale as possible to adequately show required detail) - 1:100, if in SI units

Details - 1:10 minimum, if in SI units

2.6.10 Binding

All volumes of drawing prints shall be firmly bound and shall have covers of heavier bond than the drawing sheets. If posts are used to fasten sheets together, the drilled holes on the bond edges of the sheets shall be on 8-1/2-inch centers.

2.6.11 Typical Sheets

Typical sheets of standard details uniformly used on all buildings are authorized and encouraged. Sheets of standard details may be prepared so that they can be reused if the design package must be divided into separate construction packages. Each typical detail drawing sheet may be limited to a particular design discipline. Standard detail sheets shall be organized by discipline as are the other drawing sheets. Details peculiar to one facility shall not be shown in the standard details but with the group of drawings for the facility to which it pertains.

2.6.12 Sheet page numbers

At initial submission of drawings, all plan sheets shall be numbered sequentially from 1 to “x”, with “x” being the total number of drawings. See Paragraph 2.6.6 Design Discipline Designation Format guidance and “1335a-Attachments-AED, Figure 1 – AED Title Block sheet number/description” for further Sheet Reference Number requirements. Additional drawings not yet developed can be “reserved” in the Index and included in the initial numbering, or can be added later and named as follows.

For an Architectural sheet ADDED immediately after this page,

Sheet Reference Number
A-009
Sheet 09 of 43

the page would be numbered as below:

Sheet Reference Number
A-009A
Sheet 09A of 43

Other architectural, or other discipline, drawings would be likewise added and annotated on the Index sheet and on the individual drawing Sheet Reference Number Block.

2.6.13 Drawing File Number

The File Number is unique to each drawing and is a combination of a project location code, project number, facility designator and the CADD file name. Unassigned numbers or skipped sheets shall be labeled as "Not Used" on the index sheets. Cover sheets are not numbered.

2.6.14 Specifications Placed on the Drawings

Details of standard products or items which are adequately covered by specifications shall not be included on the drawings.

2.6.15 Legends

For each submittal, legends of symbols and lists of abbreviations shall be placed on the drawings. They shall include all of the symbols and abbreviations used in the drawing set, but shall exclude any symbols and abbreviations not used. Since many symbols are limited to certain design disciplines, there is a definite advantage to the use of separate legends on the initial sheet of each design discipline or in the Standard Details package for each discipline. If legends have not been shown by discipline, a legend shall be placed on the first drawing.

2.6.16 Location Grid

To facilitate the location of project elements and the coordination of the various disciplines' drawings, all plans shall indicate a column line or planning grid, and all floor plans (except structural plans) shall show room numbers.

2.6.17 Composite and Key Plans

If the plan of a large building or structure must be placed on two or more sheets in order to maintain proper scale, the total plan shall be placed on one sheet at a

smaller scale. Appropriate key plans and match lines shall appear on segmented drawings. Key plans shall be used not only to relate large scale plans to total floor plans but also to relate individual buildings to complexes of buildings. Key plans shall be drawn in a convenient location and shall indicate the relative location of the represented plan area by crosshatching.

2.6.18 Revisions

Drawing revisions shall be prepared only on the original CADD files. A revision area is required on all sheets.

PART 3 EXECUTION

3.1 GENERAL

3.1.1 Design Concept Coordination Meeting

In addition to regular meetings with the Government the Contractor shall conduct formal status briefings on a two week basis, as a minimum, to provide a management overview of design development. Shortly after contract award the Government may choose to conduct meetings with the Design-Build Contractor to refine proposal concept features. The purpose of the meeting is to assure attention to project requirements and to suggest ways of improving the design prior to tentative level submissions.

3.1.2 Government Design Changes

Government design changes which do not increase construction costs shall be made at no charge to the Government. The Contracting Officer may request design submittals in addition to those listed when deemed necessary to adequately describe the work covered in the contract documents. Submittals shall be made in the respective number of copies and to the respective addresses set forth in the paragraph entitled SUBMITTAL PROCEDURE. Each submittal shall be complete and in sufficient detail to allow ready determination of compliance with contract requirements.

3.2 SUBMITTAL REGISTERS

3.2.1 Contractor-Furnished Design Documents Submittal Register (TAC Form 122-E)

3.2.1.1 General

The Contractor shall submit as part of his Project Schedule, information regarding the submittal and clearance for construction of Contractor furnished design documents. In addition, the Contractor shall provide a complete submittal register in the sample format (TAC Form 122-E - Contractor Furnished Design Documents Submittal Register) which is attached to this section. The Contractor shall, within

seven (7) calendar days after approval of the Project Schedule, submit 3 copies of his finalized Contractor Furnished Design Document Submittal Register to the Contracting Officer for approval. The submittal register shall consist of a tabulation of all the Contractor furnished design documents with the indicated dates integrated into the Design Progress Schedule. The Contractor shall post all actual dates of submittal actions (including clearance for construction) as they occur.

3.2.1.2 Additions or Revisions

Any additions or changes required to be made to the TAC Form 122-E as a result of the Contracting Officer's review shall be incorporated into the TAC Form 122-E by the Contractor and a re-submittal of 65%, 99% and 100% design submittal and (3) copies shall be affected within five (5) calendar days after receipt of the Contracting Officer's review comments. Note: the Class I Warehouse project requires a 35% submittal.

3.2.1.3 Submission Requirements

A copy of the initial TAC Form 122-E and each monthly update prepared by the Contractor, shall be submitted to

AFGHANISTAN ENGINEER DISTRICT

(1) DHL, FEDEX, UPS or any other courier service:
U.S. Army Corps of Engineers
Afghanistan Engineer District
House # 1, St. #1 West
West Wazir Akbar High School
Behind Amani High School
Kabul, Afghanistan
Attn.: Chief, Engineering & Construction Division

3.2.2 Construction Submittal Register (ENG Form 4288)

Attached to this section is ENG Form 4288 which the Contractor is responsible for developing for this contract. All construction submittals shall be shown on this register. The submittal register shall be the controlling document and will be used to control all construction submittals throughout the life of the contract. The Contractor shall maintain and update the register on a monthly basis for the Contracting Officer's approval.

3.3 TRANSMITTAL FORM (ENG Form 4025)

The sample transmittal form (ENG Form 4025) attached to this section shall be used for submitting both design and construction submittals in accordance with the instructions on the reverse side of the form. These forms will be furnished to the Contractor. This form shall be properly completed by filling out all the heading

blank spaces and identifying each item submitted. Special care will be exercised to ensure proper listing of the specification paragraph and/or sheet number of the contract drawings pertinent to the data submitted for each item.

3.4 PROGRESS SCHEDULE

The Contractor shall prepare and submit a design progress schedule to the Contracting Officer. The Critical Path Method (CPM) of network calculation shall be used to generate the Project Schedule. The progress schedule shall show, as a percentage of the total design price, the various items included in the contract and the order in which the Contractor proposes to carry on the work, with dates on which he will start the features of the work and the contemplated dates for completing same. Significant milestones such as review submittals shall be annotated. The Contractor shall assign sufficient technical, supervisory and administrative personnel to insure the prosecution of the work in accordance with the progress schedule. The Contractor shall correct the progress schedule at the end of each month and shall deliver Submittal section AED (3) copies to the Contracting Officer. The approved Project Schedule shall be used to measure the progress of the work, to aid in evaluating time extensions, and to provide the basis of all progress payments.

3.5 SCHEDULING

3.5.1 Design Submittals

Adequate time (a minimum of seven (7) calendar days exclusive of mailing time) shall be allowed for review and clearance for construction. If the Contractor fails to submit design submittals in a timely fashion, or repetitively submits design submittals that are not in strict conformance with the contract documents, no part of the time lost due to such actions shall be made the subject of claim for extension of time or for excess costs or damages by the Contractor.

3.5.2 Post Design Construction Submittals

Submittals covering component items forming a system or items that are interrelated shall be scheduled to be coordinated and submitted concurrently. Certifications to be submitted with the pertinent drawings shall be so scheduled. Adequate time (a minimum of seven (7) calendar days exclusive of mailing time) shall be allowed for review and approval. If the Contractor fails to submit post design construction submittals in a timely fashion, or repetitively submits submittals that are not in strict conformance with the contract documents, no part of the time lost due to actions shall be made the subject of claim for extension of time or for excess costs or damages by the Contractor.

3.6 SUBMITTAL PROCEDURE

3.6.1 Design Submittals

3.6.1.1 Afghanistan Engineer District (AED)

Two (2) half-size hard copies and one (1) soft copy on CD-ROM of all design submittals (calculations, reports of field tests, design analysis, plans, specifications, etc) shall be transmitted to the Government using one of the following addresses, by means of ENG Form 4025:

AFGHANISTAN ENGINEER DISTRICT

(1) DHL, FEDEX, UPS or any other courier service:
U.S. Army Corps of Engineers
Afghanistan Engineer District
House # 1, St. #1 West
West Wazir Akbar High School
Behind Amani High School
Kabul, Afghanistan
Attn.: Chief, Engineering Branch

3.6.1.2 Resident/Area Engineer Office

A complete design submittals shall be provided to the Area and/or Resident Engineer Office such that these are received **at the same time** as these submittals are delivered to the Resident Office the project falls under. At the Pre-Construction meeting, the Contractor will be furnished the Area and/or Resident Office addresses to which these submittals shall be provided. Submit one (1) full size, one (1) half sized (1/2) and CD-ROM.

3.6.2 Deliverables "Cleared for Construction"

Once the Design Documents have been "Cleared for Construction" by the Contracting Officer, the Design-Build Contractor shall clearly identify each document by annotating it as “Cleared for Construction”. One (1) full size, one (1) half (1/2) size hard copy and one (1) CD set of all finalized design documents shall be submitted to the Government as follows:

a. AFGHANISTAN ENGINEER DISTRICT

(1) DHL, FEDEX, UPS or any other courier service:
U.S. Army Corps of Engineers
Afghanistan Engineer District
House # 1, St. #1 West
West Wazir Akbar High School
Behind Amani High School
Kabul, Afghanistan
Attn: Chief, Engineering Branch

b. Area Engineer Office.

3.6.3 Editable CADD Format As-Builts

This is a Design-Build project and in accordance with Contract Clause 52.227-7022 GOVERNMENT RIGHTS (UNLIMITED), the Government has non-exclusive rights to use the design on other projects. Therefore, the As-Builts furnished to the Government must be in an editable format. See Section 01780A CLOSEOUT SUBMITTALS, Paragraphs 1.1 and 1.2, for all requirements associated with submission of editable CADD format As-Builts required as part of this contract.

3.6.4 Digital Transmission of Design Submittals

The Design-Build Contractor may submit design deliverables addressed by this specification in digital format. The following procedure shall be followed:

a. USE OF FILE TRANSFER PROTOCOL (FTP) SERVER. The Design-Build contractor will download all design files on either its own File Transfer Protocol (FTP) Server, the Corps FTP Server or as otherwise directed. Afghanistan Engineer District (AED) prefers that the contractor provide the soft copy of design submittals be burned to CD-ROM and submitted as such. The procedure to be followed will be established at the Pre-Construction Conference and the appropriate log-in and password information will be exchanged between the Government and the Design-Build Contractor.

AED accepts AutoDesk AutoCad release 2004 or higher drawing file format as the standard due to the fact that the local region does not support Microstation.

b. TRANSLATED OR CONVERTED FILES DRAWING FILES. Digital drawing files shall be prepared as indicated in the paragraph entitled COMPUTER ASSISTED DESIGN AND DRAFTING (CADD). Under NO circumstances shall the Design-Build Contractor translate (or convert) the files from AutoDesk AutoCAD to Bentley Microstation.

c. NOTIFICATION. The Design-Build Contractor shall notify all recipients by email that the Design submittal has been downloaded to the designated FTP server or electronically provided on a CD and is ready for Government review. This email shall include a scanned copy of the ENG Form 4025 signed by the Design-Build Contractor’s Contractor Quality Control (CQC) Organization. It shall also include an updated digital copy of TAC Form 122-E. The Government will use the digital submittal as an advance copy pending receipt of an official hardcopy version in accordance with the paragraph entitled SUBMITTAL PROCEDURE. Subsequent to a period of demonstrated successful performance, the Government may elect to eliminate the requirement to submit an official hardcopy version.

The TAC Form 122-E shall be prepared in a spread sheet software that readily allows the file to be saved as a *.CSV file that can subsequently be imported into the Corps of Engineers Resident Management System (RMS) software.

d. RETURN OF GOVERNMENT REVIEWED SUBMITTALS. Subsequent to the Government review, the Eng Form 4025 with comments (if applicable) will be returned to the Design-build Contractor digitally by email. Hardcopies of these documents will subsequently be submitted to the Design-Build Contractor via the United States Postal Service (USPS). The Government may elect to stop sending hardcopies if it deems that digital transmission of design submittals is progressing satisfactorily.

e. SUPPLEMENTAL ACTIONS. All supplemental actions, re-submittals, and subsequently scheduled submissions shall be performed by the Design-Build contractor as indicated within this paragraph.

3.6.2 Post Design Construction Submittals

Two (2) copies of all post design construction submittals shall be transmitted to:

AFGHANISTAN ENGINEER DISTRICT

(1) DHL, FEDEX, UPS or any other courier service:
U.S. Army Corps of Engineers
Afghanistan Engineer District
House # 1, St. #1 West
West Wazir Akbar High School
Behind Amani High School
Kabul, Afghanistan
Attn: Chief, Engineering Branch

3.6.3 Submittal Numbering System

Instructions on the numbering system to be used for construction submittals follows.

3.6.3.1 Submittals

Shop drawings and materials are listed on the Submittal Register (ENG Form 4288) as follows:

a. List is prepared according to contract specifications and drawings, picking up all items involved in the project.

b. This list is divided into sections as indicated in the specifications. For example:

Sec 01015 "Technical Requirements"

Sec 01335 “Design Submittals”
Sec. 02831 "Chain-Link Fence"
Sec. 02710 "Subdrainage System"
Sec 03300 "Concrete For Building Construction"
Sec. 04200 "Masonry"

3.6.3.2 Numbering procedures for transmittal on ENG FORM 4025

Each Specification Section will have various requirements for submittals (design information, product data, test reports, procedures, etc.) to the Government for Approval (GA) or For Information Only (FIO). Items from different Sections cannot be submitted on the same ENG Form 4025. When furnishing one or more items from the same Section at a given time, a single ENG Form 4025 can be used to identify and submit these items. Block ‘b” of the 4025 entitled “DESCRIPTION OF ITEM SUBMITTED” should provide an accurate and unique description of each item being proposed by the Contractor. Item numbers (block “a” of the 4025 entitled “ITEM NO.”) will be automatically generated in QCS for each ENG Form 4025. QCS will track and automatically generate the “ITEM NO.” for all following ENG Form 4025s for the same Section number. To illustrate, a transmittal for the 35% Design Submittal required by Section 01335 might have the following Items:

ITEM NO. 1 Topographic Information
ITEM NO. 2 Geotechnical Report
ITEM NO. 3 Foundation Design
ITEM NO. 4 35% Plans
ITEM NO. 5 Outline of Construction Specifications to be used

If this was the first submittal furnished by the Contractor for Section 01335, then a Transmittal Number of 01335-1 would be generated using QCS. As new transmittals are generated in QCS, the last digit of the transmittal is increased incrementally, as follows:

Transmittal No. 01335-2
Transmittal No. 01335-3
Transmittal No. 01335-4

and so forth. The first transmittal submitted from each Specification Section will be “-1”, in other words, there will never be a “Transmittal No. 01335-0”.

The above illustration is true for all other Specification Sections included in the Request for Proposal or in the Construction Specifications compiled by the Design-Build Contractor in the prosecution of work under the RFP.

For design reviews the standard Corps of Engineers method of review is through DrChecks$_{SM}$ through projnet https://www.projnet.org/projnet/binKornHome/index.cfm All of AED design submittal reviews shall be done through DrChecks$_{SM}$.

3.6.3.3 Re-submittals

Should the Contractor be required to resubmit any transmittal due to one or more items on that transmittal being Coded “C” (Approved, except as noted, Resubmission Required) or “E” (Disapproved) by the Government, it will be accomplished by using QCS to generate the same transmittal number followed by the number "-1" for the first re-submittal, "-2" for the second re-submittal, "-3" for the third re-submittal, etc.

As an example, assume the 65% Design Submittal is provided to the Government as Transmittal 01335-9. Due to omissions or errors in that Submittal which result in a Code “E” being given, then the subsequent 65% Design Resubmittal #1 would be “Transmittal 01335-9.1”. Should a resubmittal again be necessary, it would be Design Resubmittal #2 and would be submitted as “Transmittal 01335-9.2”.

The purpose of this system is to avoid deviations from the Submittal Register and to track submittals in both RMS and DrChecks$_{SM}$. It should be noted that a new transmittal number following the above system CANNOT be generated in QCS unless the prior transmittal has been given a Code, and if the Design-Build Contractor is having difficulty generating the correct transmittal number contact with the COR should be made to accomplish this coding in RMS.

3.6.4 Variations

If design documents or construction submittals show variations from the contract parameters and/or requirements, the Contractor shall justify such variations in writing, at the time of submission. Additionally, the Contractor shall also annotate block "h" entitled "variation" of ENG FORM 4025. After design submittals have been reviewed and cleared for construction by the Contracting Officer, no resubmittal for the purpose of substituting materials, equipment, systems, and patented processes will be considered unless accompanied by the following:

a. Reason or purpose for proposed variation, substitution, or revision.

b. How does quality of variation compare with quality of the specified item? This shall be in the form of a technical evaluation tabulating differences between the item(s) originally specified and what is proposed.

c. Provide a cost comparison. This shall include an acquisition and life cycle cost comparison.

d. For proprietary materials, products, systems, and patented processes a certification signed by an official authorized to certify in behalf of the manufacturing company that the proposed substitution meets or exceeds what was originally specified.

e. For all other actions, a certification signed by a licensed professional engineer or architect certifying that the proposed variation or revision meets or exceeds what was originally specified.

f. Advantage to the Government, if variation is approved, i.e. Operation and Maintenance considerations, better product, etc.

g. Ramifications and impact, if not approved.

If the Government review detects any items not in compliance with contract requirements or items requiring further clarification, the Contractor will be so advised. Lack of notification by the Contracting Officer of any non-complying item does not relieve the Contractor of any contractual obligation.

3.6.5 Non-Compliance

The Contracting Officer will notify the Contractor of any detected noncompliance with the requirements of this specification. The Contractor shall take immediate corrective action after receipt of such notice. Such notice, when delivered to the Contractor at the worksite, shall be deemed sufficient for the purpose of notification. If the Contractor fails or refuses to comply promptly, the Contracting Officer may issue an order stopping all or part of the work until satisfactory corrective action has been taken. No part of the time lost due to such stop orders shall be made the subject of claim for extension of time or for excess costs or damages by the Contractor.

3.7 REVIEW OF CONTRACTOR PREPARED DESIGN DOCUMENTS

3.7.1 General

The work under contract will be subject to continuous review by representatives of the Contracting Officer. Additionally, joint design review conferences with representation by all organizations having a direct interest in the items under review may be held. The Design-Build Contractor shall furnish copies of all drawings and related documents to be reviewed at the review conference on or before the date indicated by the Government. Additional conferences pertaining to specific problems may be requested by the Design-Build Contractor or may be directed by the Contracting Officer as necessary to progress the work. The Design-Build Contractor shall prepare minutes of all conferences and shall furnish two copies to the Contracting Officer within seven (7) days after the conference.

3.7.2 Independent Design Review

The Design-Build Contractor shall have someone other than the Designer or Design Team perform an independent review of all specifications, drawings, design analysis, calculations, and other required data prior to submission to the

Government. Upon completion of this review, the Design-Build Contractor shall certify that each design submittal is complete, accurate, is in strict conformance with all contract requirements, that repetition has been avoided, that all conflicts have been resolved, and that the documents have thoroughly coordinated and cross checked against all the applicable disciplines to prevent the omission of vital information.

3.7.3 Contractor's Quality Control Organization Review

The Contractor shall thoroughly review each submittal prior to submission to the Contracting Officer to assure it is complete, correct and unified. This review shall be for the purposes of eliminating errors, interferences, and inconsistencies, and of incorporating design criteria, review comments, specifications, and any additional information required. The Contractor will give evidence of such review of all items in each submittal ENG Form 4025, by annotating Column “g” (titled “For Contractor Use Code”) of this Form with the letter “A,” meaning the Design-Build Contractor has reviewed it and is indicating it is “Approved as Submitted”. Design submittals submitted to the Contracting Officer without evidence of the above requirements or the Contractor's certified approval will be returned for resubmission. No part of the time lost due to such resubmissions shall be made the subject of claim for extension of time or for excess costs or damages by the Contractor.

3.7.4 Government Review

Within 7 days after Notice to Proceed, the Contractor shall submit, for approval, a complete design schedule with all submittals and review times indicated in calendar dates. The Contractor shall update this schedule monthly. After receipt, the Government will be allowed seven (7) days to review and comment on all Design Submittals, except as noted below. For each design review submittal, comments from the various design sections and from other concerned agencies involved in the review process will be made in the on-line review management system DrChecks$_{SM}$ (https://www.projnet.org/projnet/binKornHome/index.cfm). Contractor shall coordinate with the Contracting Officer and/or Representative(s) to register for DrChecks$_{SM}$ use. The review will be for conformance with the technical requirements of the solicitation and the Successful Offeror's (Contractor's) RFP proposal.

If a design submittal is deficient, it will be returned for correction and resubmission. The review time will begin when the corrected submittal is received. The Design-Build Contractor may be liable for liquidated damages owed to the Government for returned design submittals due to deficiencies.

The contractor shall not begin construction work until the Government has reviewed the Design-Build Contractor's design and has cleared it for construction. Clearance for construction does not mean Government approval. Government review shall not be construed as a complete check but will evaluate the general design approach and adherence to contract parameters. The Government Review is often

limited in time and scope. Therefore, the Design-Build Contractor shall not consider any review performed by the Government as an excuse for incomplete work. Upon completion of the review, all comments will be forwarded to the Contractor. The Contracting Officer will indicate whether the design submittal has or has not been cleared for construction using the following action codes:

A – Cleared for Construction

B – Cleared for Construction, except as noted in attached comments

C – Cleared for Construction, except as noted in attached comments, resubmission required

E - NOT Cleared for Construction, see attached comments, resubmission required

FX – Receipt acknowledged, does not comply as noted with contract requirements.

These codes shall NOT be used by the Design-Build Contractor.

Design submittals Cleared for Construction by the Contracting Officer shall not relieve the Contractor from responsibility for any design errors or omissions and any liability associated with such errors, nor from responsibility for complying with the requirements of this contract.

3.7.4.1 Incorporation of Government Review Comments

If the Contractor disagrees technically with any comment or comments and does not intend to comply with the comment, he must clearly outline, with ample justification, the reasons for noncompliance within five (5) days after close of review period in order that the comment can be resolved. The Contractor shall furnish disposition of all comments in DrChecks$_{SM}$, with the next scheduled submittal. The disposition shall identify action taken with citation of location within the relevant design document. Generalized statements of intention such as "will comply" or "will revise the specification" are not acceptable. The Contractor is cautioned that if he believes the action required by any comment exceeds the requirements of this contract, that he should flag the comment in DrChecks$_{SM}$ as a scope change, and notify the COR in writing immediately. If a design submittal is over one (1) day late in accordance with the latest design schedule, the Government review period may be extended 7 days. Submittals date revisions must be made in writing at least five (5) days prior to the submittal. During the design review process, comments will be made on the design submittals that will change the drawings and specifications. The Government will make no additional payments to the Contractor for the incorporation of comments. Review comments are considered part of the design-build process.

The Contractor will be furnished comments from the Afghanistan Engineer District, Corps of Engineers, Transatlantic Programs Center (TAC), as well as from other concerned agencies involved in the review process. The review will be for conformance with the technical requirements and parameters of the contract documents. The Contractor shall either incorporate each comment or, if the Contractor disagrees technically and does not intend to comply with the comment(s), the contractor shall clearly outline, with ample justification, its reasons for its noncompliance within five (5) days after receipt of the comment(s). Additionally, the Contractor is cautioned in that if it believes the action required by any comment exceeds the requirements of this contract, that he should take no action and notify the Contracting Officer in writing immediately. The disposition of all comments shall be furnished in writing with the next scheduled submittal. The review comments and the submittal material for each design review will become the basis for any ensuing design work. Copies of the design review comments with the action taken on each comment noted, shall be bound in all succeeding volumes of the design analysis.

3.7.4.2 Conferences

As necessary, conferences will be conducted between the Design-Build Contractor and the Government to resolve review comments.

A review conference may be held at the completion of AED review and subsequent Design-Build contractor response for each design submittal. The review conference will be held at the Corps District Office in Kabul, Afghanistan. The Contractor shall bring the personnel that developed the design submittal to the review conference.

3.7.4.3 Design Deficiencies

Design deficiencies noted by the Government shall be corrected prior to the start of design for subsequent features of work which may be affected by, or need to be built upon, the deficient design work.

3.7.5 Design Discrepancies

The Design-Build Contractor shall be responsible for the correction of incomplete design data, omissions, and design discrepancies which become apparent during construction. The Design-Build Contractor shall provide the Contracting Officer with a proposed recommendation for correcting a design error, within three (3) calendar days after notification by the Contracting Officer. The Contracting Officer will notify the Design-Build Contractor of any detected noncompliance with the foregoing requirements. The Design-Build Contractor shall take immediate corrective action after receipt of such notice. Such notice, when delivered to the Design-Build Contractor at the worksite, shall be deemed sufficient for the purpose of notification. If the Design-Build Contractor fails or refuses to comply promptly, the Contracting Officer may issue an order stopping all or part of the work until satisfactory

corrective action has been taken. No part of the time lost due to such stop orders shall be made the subject of claim for extension of time or for excess costs or damages by the Design-Build Contractor. Should extensions of design, fabrication plans and/or specific manufacturer's details be required as a result of a Government issued Change Order, the Government will make an equitable adjustment in accordance with Contract Clause 52.243-4 entitled CHANGES.

3.8 Phased or "Fast-Track" Design

3.8.1 General

If approved by the Government, design and construction sequencing may be effected on an incremental basis as each approved phase or portion (e.g., demolition, geotechnical, site work, exterior utilities, foundations, substructure, superstructure, exterior closure, roofing, interior construction, mechanical, electrical, etc.) of the design is completed.

3.8.1.1 Design Phases

Complete or partial design phasing may or may not have been specified by the Government elsewhere in this contract. For construction sequencing or phasing that the Government has not specifically mandated, the Design-Build Contractor may submit a proposed phasing plan. Design phasing proposed by the Design-Build Contractor shall be submitted to the Government for approval in accordance with TAC Form 122-E CONTRACTOR FURNISHED DESIGN DOCUMENTS.

3.8.2 Sequence of Design-Construction (Fast-Track)

After receipt of the Contract Notice to Proceed (NTP) the Contractor shall initiate design, comply with all design submission requirements and obtain Government review of each submission. The contractor may begin construction on portions of the work for which the Government has reviewed the final design submission and has determined satisfactory for purposes of beginning construction. The Contracting Officer will notify the Contractor when the design is cleared for construction. The Government will not grant any time extension for any design resubmittal required when, in the opinion of the Government, the initial submission failed to meet the minimum quality requirements as set forth in the contract.

3.8.3 Notice-to-Proceed for Limited Construction

If the Government allows the Contractor to proceed with limited construction based on pending minor revisions to the reviewed Final Design submission, no payment will be made for any in-place construction related to the pending revisions until they are completed, resubmitted and are satisfactory to the Government.

3.8.4 In-Place Construction Payment

No payment will be made for any in-place construction until all required submittals have been made, reviewed and are satisfactory to the Government.

3.8.5 Commencement of Construction

Construction of work may begin after receipt of the clearance for construction (Notice to Proceed) for each design phase upon notice from the Contracting Officer. Any work performed by the Contractor prior to receipt of the clearance for construction by the Contracting Officer, shall be at the Contractor's own risk and expense. Work cleared for construction that does not conform to the design parameters and/or requirements of this contract shall be corrected by the Contractor at no additional cost or time to the Government.

3.9 DESIGN STAGES

The Contractor shall schedule the number and composition of the design submittal phases. Design submittals are required at the Concept (35%) (required only for the Entry Control Point project), Preliminary Review (65%), Final (99%) design stages, and at the 100% Cleared for Construction stage. The requirements of each design stage are listed hereinafter. The Contractor shall clearly label and date all design submittals to reflect the current design stage and date of submission to the Government to avoid confusion between current and previous submittals.

The design submittals shall reflect the current stage, whether it be 35% Design Submittal (required only for the Entry Control Point project); 65% Design Submittal; 99% Design Submittal; or 100% Design Submittal.

Any res-ubmittals shall follow the following naming convention: 35% Design Resubmittal #1; 35% Design Resubmittal #2; 35% Design Resubmittal #3, and so forth for all other later Design Re-submittals.

The Contractor use the above nomenclature and date of submission to the Government for Plan Cover Sheets; title blocks for all drawings; all Specification Cover Sheets; all specification pages; all Design Analysis Cover Sheets and associated pages; and similar labeling for all other documents included in the design submittal.

See the attachment titled “01335a-Attachments-AED.pdf” (Figures 1-5) for required Title Block Required Annotations drawing guidance.

The number and contents of the design submittals phases shall be reflected in TAC Form 122-E as well as in the Contractor's design progress schedule.

3.9.1 Concept Review Submittal (35%) **NOTE: ONLY REQUIRED FOR THE ENTRY CONTROL POINT (ECP) PROJECT**

The review of this submittal is primarily to ensure that the Contractor has taken an inventory of the existing conditions at each proposed site, has established the most desirable functional relationships between the various project elements, has provided the technical solution as to how the functional and technical requirements will be met, and to show Contractor compliance (or justify noncompliance) with the design parameters and/or requirements. Refer to requirements herein for specific submittal requirements. As a minimum, the following documents shall be submitted:

a. Complete site topographic survey and Grading Plan.
b. Geotechnical Report, indicating appropriate information for various site characteristics, soil parameters as determined by certified lab tests, assumed building foundation loads and associated settlement estimates, and a recommendation of the foundation systems to be constructed. Other RFP Section 1010 and 1015 requirements for this Report shall also be included.
c. Preliminary Design Analysis, Preliminary Design Calculations, and full plans and specifications for those features of work the Contractor will request Partial Clearance for Construction after Government review of this 35% Submittal.
d. Remaining features of work shown on 35% design complete Plans;
e. Outline of Construction Specification Sections to be used and those Specification items requiring Government Approval (GA).
f. Full design analysis, drawings, specifications and other GA construction submittal information for project components with long ordering, fabrication and delivery times.
g. Site plan showing all traffic lanes with proposed barrier plan and all required dimensions (ie, lane width, etc).

3.9.2 General design (65%):

The review of this submittal is primarily to insure that the contract documents and design analysis are proceeding in a timely manner and that the design criteria are being correctly interpreted. The submittal shall consist of the following:

a. Design Analysis.
b. Draft Construction Specifications (all anticipated sections, edited to include only applicable requirements).
c. Construction Drawings, with full plans and specifications for those features of work the Contractor will again request a Partial Clearance for Construction on after successful and satisfactory Government review.
Environmental permits, as required. When environmental permits are not required, the Contractor shall provide a statement with justification to that effect.

3.9.3 Final Review Submittal 99%

The review of this submittal is to insure that the design is in accordance with directions provided the Contractor during the design process. The only effort remaining between the Final Design Review Submittal and the "Cleared For Construction" Design Review Submittal is the incorporation of all Government

review comments. The Contractor shall submit the following documents for this review:

a. Design Analysis, developed to a 99% design stage. The Design Analysis shall be in its final form. It shall include all backup material previously submitted and revised as necessary. All design calculations shall be included. The Design Analysis shall contain all explanatory material giving the design rationale for any design decisions which would not be obvious to an engineer reviewing the Final Drawings and Specifications.
b. 99% Complete Construction Specifications. The Draft Specifications on all items of work submitted for Final Review shall consist of marked-up proprietary specifications, edited to include all pertinent features of work and removal of all specifications unrelated to the RFP work. All GA Construction Submittals shall be included.
c. 99% Complete Construction Drawings. The Contract Drawings submitted for Final Review shall include the drawings previously submitted which have been revised and completed as necessary. The Contractor is expected to have completed all of his coordination checks and have the drawings in a design complete condition. The drawings shall be finalized at this time including the incorporation of any design review comments generated by all past design reviews. The drawings shall contain all the details necessary to assure a clear understanding of the work throughout construction.
d. All AED DrChecks$_{SM}$ comments from prior reviews (and any re-submittals at these design levels) completely addressed and incorporated into project design, plans and specifications.

3.9.4 "Cleared for Construction" Design Review Submittal (100%)

After the Final Design Review Submittal (99%) review, the Contractor shall revise the Contract Documents by incorporating any comments generated during the Final Design Review Submittal and shall prepare final Construction Specifications. The Contractor shall submit the following documents for the design complete submittal:

a. Design Analysis.
b. Construction Specifications.
c. Construction Drawings.
d. A soft copy (CD) of the design drawings, specifications, and design analysis shall be submitted at this stage and all other subsequent stages of the design process.
e. All AED DrChecks$_{SM}$ comments from prior reviews (and any re-submittals at these design levels) must be completely addressed and incorporated into project design, plans and specifications.

Once the design documents have been "Cleared for Construction" by the Contracting Officer, the Design-Build Contractor shall clearly identify each document by annotating it as "Cleared for Construction."

3.9.5 Partial Design Submittals

In the interest of expediting construction, the Contracting Officer may approve partial design submittals, procurement of materials and equipment, as well as issue the Notice To Proceed (NTP) for construction of those elements of the design which have been cleared for construction. Such partial notices to proceed shall be solely at the discretion of the Contracting Officer.

3.9.6 Design Submittals not in compliance with the contract documents

The Contractor shall, without additional compensation, correct or revise any errors or deficiencies in its design analysis, specifications, and drawings, and promptly furnish a corrected submittal in the form and number of copies as specified for the initial submittal. No part of the time lost due to such resubmissions shall be made the subject of claim for extension of time or for excess costs or damages by the Contractor. If the Contractor considers any correction indicated on the submittals to constitute a change to the contract, a notice shall be given promptly to the Contracting Officer.

3.10 GENERAL DESIGN INSTRUCTIONS

3.10.1 Responsibility of the Design-Build Contractor

3.10.1.1 Professional Quality, Technical Accuracy, and Coordination

The Design-Build Contractor shall be responsible for the professional quality, technical accuracy, and the coordination of all design specifications, drawings, and other services furnished under this contract. Work must be organized in a manner that will assure thorough coordination between various details on drawings, between the various sections of the specifications, and between the drawings and specifications. The Design-Build Contractor shall thoroughly cross-check and coordinate all work until he is professionally satisfied that no conflicts exist, vital information has not been omitted, and that indefinite language open to interpretation has been resolved.

3.10.1.2 Deviating From the “Cleared-For-Construction” Design

(a.) The Contractor must obtain the approval of the Designer of Record (DOR) and the Government’s concurrence for any Contractor proposed revision to the professionally stamped and sealed design reviewed and Cleared for Construction by the Government, before proceeding with the revision.

(b.) The Government reserves the right to non-concur with any revision to the design, which may impact furniture, furnishings, equipment selections or operations decisions that were made, based on the reviewed and cleared for construction design.

(c.) Any revision to the design, which deviates from the contract requirements (i.e., the RFP and the accepted proposal), will require a modification, pursuant to the Changes clause, in addition to Government concurrence. The Government reserves the right to disapprove such a revision.

(d.) Unless the Government initiates a change to the contract requirements, or the Government determines that the Government furnished design criteria are incorrect and must be revised, any Contractor initiated proposed change to the contract requirements, which results in additional cost, shall strictly be at the Contractor's expense.

(e.) The Contractor shall track all approved revisions to the reviewed and cleared for construction design and shall incorporate them into the As-Built design documentation, in accordance with Section 01780A, CLOSEOUT SUBMITTALS, Paragraphs 1.1 and 1.2, which lists all requirements associated with submission of editable CADD format As-Builts required as part of this contract. The Designer of Record shall document its professional concurrence on the As-Builts for any revisions by affixing its stamp and seal on the drawings and specifications.

3.10.1.3 Government Oversight

The extent and character of the work to be done by the Design-Build Contractor shall be subject to the general oversight, supervision, direction, control, and review by the Contracting Officer.

3.10.1.4 Unlimited Drawing Rights

The Government shall have unlimited rights in all drawings, designs, specifications, notes and all other works developed in the performance of this contract, including the right to use same on any other Government design or construction without additional compensation to the Design-Build Contractor. The Design-Build Contractor hereby grants to the Government a paid-up license throughout the world to all such works to which he may assert or establish any claim under design patent or copyright laws.

3.10.1.5 Conflicts

Any conflicts, ambiguities, questions or problems encountered by the Design-Build Contractor in following the criteria shall be immediately submitted in writing to the Contracting Officer with the Design-Build Contractor's recommendations. Prior to submission to the Government the Design-Build Contractor shall take appropriate measures to obtain clarification of design criteria requirements, to acquire all pertinent design information, and to incorporate such information in the work being performed.

3.10.1.6 Design Specialists

Whenever a design specialist is required, the Design-Build Contractor shall submit for the approval by Contracting Officer, the name of the designated specialist along with the individual's educational background, experience, and licenses or registrations held, before design work commences. The design specialists shall be registered architects, registered professional engineers, or recognized consultants with a background of at least five (5) years design experience in the appropriate specialty. Services of design specialists may be required for the following specialties:

Fire Protection	Landscape Design
Medical Design	Stage/Theater Design
Acoustical Design	Interior Design
Educational Design	Security
Telecommunications	Audio Visual, PA, TV, etc.
Geotechnical Design	Hardened Structures
Asbestos Abatement	X-Ray Shielding
EMF Shielding	Site grading

3.10.2 Conduct of Work

3.10.2.1 Performance

Perform the work diligently and aggressively, and promptly advise the Contracting Officer of all significant developments.

3.10.2.2 Telephone Conversations

Prepare a summary, and promptly furnish a copy thereof to the Contracting Officer, of all telephone conversations relating to the design work under this contract.

3.10.2.3 Cooperation with Others

Cooperate fully with other firms, consultants and contractors performing work under the program to which this contract pertains, upon being advised by the Contracting Officer that such firms or individuals have a legitimate interest in the program, have need-to-know status, and proper security clearance where required.

3.10.2.4 Technical Criteria

All designs, drawings, and specifications shall be prepared in accordance with the contract documents and with the applicable publications referenced therein. As soon as possible, the Design-Build Contractor shall obtain copies of all publications applicable to this contract. Availability of publications (where to purchase) is contained in Specification Section 01420 entitled: SOURCES FOR REFERENCE PUBLICATIONS. Any deviations from the technical criteria contained in the contract documents or in the applicable publications, including the use of criteria obtained from the user or other sources, must receive prior approval of the

Contracting Officer. Where the technical criteria contained or referred to herein are not met, the Design-Build Contractor will be required to conform his design to the same at his own time and expense.

3.10.3 Design Priorities

The design of this project shall consider the remote location and harsh environment of this project and the impact this will have on sources of technical supply, the cost of construction, the low level of maintenance, and the difficulty of obtaining replacement parts. Unless stated otherwise in this contract, the following design priorities shall be followed.

3.10.3.1 CONSTRUCTION LIFE-SPAN LEVELS

Permanent Construction. Buildings and facilities shall be designed and constructed to serve a life expectancy of more than 25 years, to be energy efficient, and to have finishes, materials, and systems that are low maintenance and low life-cycle cost.

Semi-Permanent Construction. Buildings and facilities shall be designed and constructed to serve a life expectancy of more than 5 years but less than 25 years, to be energy efficient, and to have finishes, materials, and systems that require a moderate degree of maintenance using the life-cycle cost approach.

Temporary Construction. Buildings and facilities shall be designed and constructed to serve a life expectancy of 2 years or less using low-cost construction, with finishes, materials, and systems that are selected with maintenance factors being a secondary consideration.

Mobilization, Emergency and Contingency Operations Construction. Buildings and facilities shall be designed and constructed to serve a specific mobilization or emergency requirement. Buildings will be austere to minimize construction time and maximize conservation of critical materials. Maintenance factors and longevity will be secondary considerations.

3.10.3.2 Operability

Systems including but not necessarily limited to mechanical, electrical, communications, etc., must be simple to operate and easy to maintain.

3.10.3.3 Standardization

Use of standardized materials, products, equipment, and systems is necessary to minimize the requirements for replacement parts, storage facilities, and service requirements.

3.10.3.4 Overseas Work

Use of construction materials or techniques shall be utilized which are suitable for overseas work in harsh climates and environments.

3.10.4 Topographic Surveys, Easements, and Utilities

Unless otherwise stated in the contract, the Design-Build Contractor will be responsible for detailed topographic mapping, available easements, and utility information for the project.

3.10.4.1 Horizontal and Vertical Control

The mapping shall be based on the base coordinate system. If the base system cannot be found, the surveyor shall use any established monuments. If monuments have been destroyed or do not exist, an assumed horizontal and vertical datum shall be established, using arbitrary coordinates of 10,000n and 10,000e and an elevation of 1,000 meters. The horizontal and vertical control established on site shall be a closed loop with third order accuracy and procedures. Provide three (3) concrete survey monuments at the survey site. All of the control points established at the site shall be plotted at the appropriate coordinate point and shall be identified by name or number, and adjusted elevations. The location of the project site, as determined by the surveyor shall be submitted in writing to the Contracting Officer. The site location shall be identified by temporary markers, approved by the Contracting Officer before proceeding with the surveying work.

3.10.4.2 Topography Requirements

A sufficient quantity of horizontal and vertical control shall be established to provide a detailed topographic survey at 1:500 scale with one quarter meter contour intervals minimum. Intermediate elevations shall be provided as necessary to show breaks in grade and changes in terrain.

The contours shall accurately express the relief detail and topographic shapes. In addition, 90 percent of the elevations or profiles interpolated from the contours shall be correct to within one-half of the contour interval and spot elevations shall be correct within plus or minus 20 millimeters.

Spot elevations affecting design of facilities shall be provided. Specifically, break points or control points in grades of terrain such as tops of hills, bottoms of ditches and gullies, high bank elevations, etc.

All surface and sub-surface structures features within the area to be surveyed shall be shown and identified on the topographic maps. In addition, these features shall be located by sufficient distance ties and labeled on the topographic sheets to permit accurate scaling and identification.

The location and sizes of potable, sanitary, electrical and mechanical utilities within the survey site shall be shown on the survey map. Sanitary manholes and appurtenances shall show top elevations and invert elevations.

3.10.5 Geotechnical Investigation

Unless otherwise stated in the contract, the Design-Build Contractor will be responsible for Geotechnical investigation, including subsurface explorations, sampling, field and laboratory testing, and water studies where applicable.

3.10.6 Cathodic Protection and Earth Resistance

Unless otherwise stated in the contract, the Design-Build Contractor will be responsible for determining whether cathodic protection on buried structures and underground utility systems are needed for special electrical grounding and counterpoise systems, and for gathering the field data necessary for design.

3.10.7 Water Supply and Quality Data

Unless otherwise stated in the contract, the Design-Build Contractor will be responsible for obtaining all water supply and water quality data. This data will include information on the locations and depths of all viable water supply sources at the site(s) involved and a water quantity and water quality analysis for each source.

3.10.8 Occupational Safety and Health Act

The facilities, systems, and equipment designed under this contract shall comply with the Occupational Safety and Health Act (OSHA), Code of Federal Regulations, Title 29, Chapter XVII, Parts 1910 and 1926. Any problems in incorporating these standards due to conflicts with other technical criteria shall be submitted to the Contracting Officer for resolution.

3.10.9 Asbestos Containing Materials

Asbestos containing material (ACM) will not be used in the design of new structures or systems. In the event no other material is available which will perform the required function or where the use of other material would be cost prohibitive, a waiver for the use of asbestos containing materials must be obtained from CETAC.

3.10.9.1 Existing Construction

Asbestos containing materials (ACM) presently included in existing construction to be rehabilitated or otherwise modified as a result of this project shall be removed and a non-asbestos containing material substituted in lieu thereof.

3.10.9.2 Suspected Asbestos Containing Materials

All such structures and systems shall be inspected to determine the presence or probable presence of ACM. When ACM is suspected, a documented survey will be performed. The survey will be developed into an abatement design and will be made a part of the design documents. In the event no other material is available which will perform the required function or the use of a substitute material would be cost prohibitive due to initial cost and tear-out of existing construction, a waiver for the retention of the asbestos containing material must be obtained from the Contracting Officer.

3.11 VALUE METHODOLOGY/VALUE ENGINEERING

The Design-Build Contractor during the course of his design shall be alert for and shall identify those high-cost low-value items or areas which he considers may be accomplished in different ways that will increase the value of the project at the same or less cost. Potential value engineering study items shall be reported to the Value Engineer through the Contracting Officer.

3.11.1 Performance Oriented Value Engineering Change Proposal (VECP)

In reference to Contract Clause 52.248-3, "Value Engineering - Construction", the Government may refuse to entertain a "Value Engineering Change Proposal" (VECP) for those "performance oriented" aspects of the Contract Documents which were addressed in the Design-Build Contractor's accepted contract proposal and which were evaluated in competition with other Proposers for award of this contract. For purposes of this clause, the term "performance oriented" refers to those aspects of the design criteria or other contract requirements which allow the Proposer or the Design-Build Contractor certain latitude, choice of and flexibility to propose in its accepted contract offer a choice of design, technical approach, design solution, construction approach or other approach to fulfill the contract requirements. Such requirements generally tend to be expressed in terms of functions to be performed, performance required or essential physical characteristics, without dictating a specific process or specific design solution for achieving the desired result.

3.11.2 Prescriptive Oriented Value Engineering Change Proposal (VECP)

The Government may consider a VECP for those "prescriptive" aspects of the Solicitation documents, not addressed in the Design-Build Contractor's accepted contract proposal or addressed but evaluated only for minimum conformance with the Solicitation requirements. For purposes of this clause, the term "prescriptive" refers to those aspects of the design criteria or other Solicitation requirements wherein the Government expressed the design solution or other requirements in terms of specific materials, approaches, systems and/or processes to be used. Prescriptive aspects typically allow the Proposers little or no freedom in the choice of design approach, materials, fabrication techniques, methods of installation or other approach to fulfill the contract requirements.

3.12 GOVERNMENT APPROVED CONSTRUCTION SUBMITTALS (Required During Construction)

3.12.1 General

Since this contract requires that the drawings and specifications specify specific proprietary materials, equipment, systems, and patented processes by trade name, make, or catalog number, it is anticipated that construction shop drawings will primarily be limited to testing, construction plans (e.g., Contractor Quality Control, Accident Prevention, Resident Management System, Area Use etc), schedules (Project Schedule/Network Analysis), certificates of compliance, reports, records/statements and variations.

3.12.1.1 Variations

After design submittals have been reviewed and cleared for construction by the Contracting Officer, no submittal for the purpose of substituting materials, equipment, systems, and patented processes will be considered by the Government unless submitted in accordance with the paragraph entitled VARIATIONS.

3.12.1.2 Additional Shop Drawings and Submittals

In accordance with the paragraph entitled DESIGN DISCREPANCIES, the Government may request the Design-Build Contractor to provide additional shop drawing and submittal type data subsequent to completion of the design.

3.12.2 Incomplete Design

The Design-Build Contractor shall not use construction submittals as a means to supplant and/or supplement an incomplete design effort.

3.12.3 Government Approval of Construction Submittals

The approval of construction submittals by the Contracting Officer shall not be construed as a complete check, but will indicate only that the general method of design construction, materials, detailing and other information are satisfactory. Approval will not relieve the Design-Build Contractor of the responsibility for any error which may exist, as it is the sole responsibility of the Design-Build Contractor to certify that each submittal has been reviewed in detail and is in strict conformance with all the contract documents and design criteria referenced therein.

Virtually all design related construction submittals can and must be incorporated directly into the design specifications and drawings prepared by the Design-Build Contractor. Since the Design-Build Contractor has sole responsibility for the design, procurement, and construction, impediments do not exist which would impair his ability to specifically identify what is being furnished to the Government

prior to the start of construction. Generic/non-proprietary specifications are indicative of an incomplete design effort and as such must be rejected as unacceptable

3.12.4 Submittals

Submittals (other than shop drawings) shall be limited to items such as Plans (e.g., Quality Control Plan, Accident Prevention Plan, Area Use Plan etc.),Certificates of Compliance, Installation Instructions, Manufacturer's Catalog Data, Descriptive Literature/Illustrations, Factory and Field Test Reports, Performance and Operational Test Data Reports, Records, Operation and Maintenance Manuals, and required variations.

3.12.5 Government Review

Upon completion of review of construction submittals requiring Government approval, the submittals will be identified as having received approval by being so stamped and dated. Two (2) copies of the submittal will be retained by the Contracting Officer and one (1) copy of the submittal will be returned to the Design-Build Contractor.

3.13 FOR INFORMATION ONLY SUBMITTALS

These submittals shall be checked, stamped, signed and dated by the Design-Build Contractor's Quality Control Engineer, certifying that such submittal complies with the contract requirements. All Contractor submittals shall be subject to review by the Government at any time during the course of the contract. Any Contractor submittal found to contain errors or omissions shall be resubmitted as one requiring "approval". No adjustment for time or money will be allowed for corrections required as a result of noncompliance with plans or specifications. Normally submittals for information only will not be returned. Approval of the Contracting Officer is not required on information only submittals. These submittals will be used for information purposes. The Government reserves the right to require the Design-Build Contractor to resubmit any item found not to comply with the contract. This does not relieve the Design-Build Contractor from the obligation to furnish material conforming to the plans and specifications and will not prevent the Contracting Officer from requiring removal and replacement if nonconforming material is incorporated in the work.

3.16 ATTACHMENTS

The following attachments form an integral part of this specification:

ENG FORM 4025 - Transmittal of Shop Drawings, Equipment Data, Material Samples, or Manufacturer's Certificate of Compliance (2 pages)

TAC FORM 122-E - Contractor Furnished Design Documents Submittal

Register

ENG FORM 4288 - Submittal Register

Figure 1 – From AEC CADD Standards; AED Title Block – sheet number/descriptions

Figure 2 - From AEC CADD Standards; AED Title Block – A-E logo/designed by/reviewed by/submitted by

Figure 3 - From AEC CADD Standards; AED Title Block – Revisions Block dimensioning

Figure 4 - From AEC CADD Standards; AED Title Block Required Notations

Figure 5 – From AEC CADD Standards; Finished Format Size

-- End of Section -

TRANSMITTAL OF SHOP DRAWINGS, EQUIPMENT DATA, MATERIAL SAMPLES, OR MANUFACTURER'S CERTIFICATES OF COMPLIANCE *(Read instructions on the reverse side prior to initiating this form)*	DATE	TRANSMITTAL NO.

SECTION I - REQUEST FOR APPROVAL OF THE FOLLOWING ITEMS *(This section will be initiated by the contractor)*

TO:	FROM:	CONTRACT NO.	CHECK ONE: ☐ THIS IS A NEW TRANSMITTAL ☐ THIS IS A RESUBMITTAL OF TRANSMITTAL _____
SPECIFICATION SEC. NO. *(Cover only one section with each transmittal)*	PROJECT TITLE AND LOCATION		CHECK ONE: THIS TRANSMITTAL IS FOR ☐ FIO ☐ GOV'T. APPROVAL

ITEM NO. *a.*	DESCRIPTION OF ITEM SUBMITTED *(Type size, model number/etc.)* *b.*	MFG OR CONTR. CAT., CURVE DRAWING OR BROCHURE NO. *(See instruction no. 8)* *c.*	NO. OF COPIES *d.*	CONTRACT REFERENCE DOCUMENT		FOR CONTRACTOR USE CODE *g.*	VARIATION *(See instruction No. 6)* *h.*	FOR CE USE CODE *i.*
				SPEC. PARA. NO. *e.*	DRAWING SHEET NO. *f.*			

REMARKS	I certify that the above submitted items have been reviewed in detail and are correct and in strict conformance with the contract drawings and specifications except as other wise stated. _____ NAME AND SIGNATURE OF CONTRACTOR

SECTION II - APPROVAL ACTION

ENCLOSURES RETURNED *(List by Item No.)*	NAME, TITLE AND SIGNATURE OF APPROVING AUTHORITY	DATE

INSTRUCTIONS

1. Section I will be initiated by the Contractor in the required number of copies.

2. Each transmittal shall be numbered consecutively in the space provided for "Transmittal No.". This number, in addition to the contract number, will form a serial number for identifying each submittal. For new submittals or resubmittals mark the appropriate box; on resubmittals, insert transmittal number of last submission as well as the new submittal number.

3. The "Item No." will be the same "Item No." as indicated on ENG FORM 4288-R for each entry on this form.

4. Submittals requiring expeditious handling will be submitted on a separate form.

5. Separate transmittal form will be used for submittals under separate sections of the specifications.

6. A check shall be placed in the "Variation" column when a submittal is not in accordance with the plans and specifications--also, a written statement to that effect shall be included in the space provided for "Remarks".

7. Form is self-transmittal, letter of transmittal is not required.

8. When a sample of material or Manufacturer's Certificate of Compliance is transmitted, indicate "Sample" or "Certificate" in column c, Section I.

9. U.S. Army Corps of Engineers approving authority will assign action codes as indicated below in space provided in Section I, column i to each item submitted. In addition they will ensure enclosures are indicated and attached to the form prior to return to the contractor. The Contractor will assign action codes as indicated below in Section I, column g, to each item submitted.

THE FOLLOWING ACTION CODES ARE GIVEN TO ITEMS SUBMITTED

A	--	Approved as submitted.	E	--	Disapproved (See attached).
B	--	Approved, except as noted on drawings.	F	--	Receipt acknowledged.
C	--	Approved, except as noted on drawings. Refer to attached sheet resubmission required.	FX	--	Receipt acknowledged, does not comply as noted with contract requirements.
D	--	Will be returned by separate correspondence.	G	--	Other *(Specify)*

10. Approval of items does not relieve the contractor from complying with all the requirements of the contract plans and specifications.

(Reverse of ENG Form 4025-R)

Contractor - Furnished Design Documents Submittal Register	Contract Title & Location:	
	Contractor:	Contract Number:

Submittal Identification Nº.	NAS Activity Code	Description of Document (s)	Contractor Submittal Date	Government Action	
				Receipt Date	Construction Clearance Date

TAC Form 122-E
September 2003(R)

SUBMITTAL REGISTER

(ER 415 1-10)

CONTRACT NO.

TITLE AND LOCATION

CONTRACTOR

SPECIFICATION SECTION

ACTIVITY NO a.	TRANS-MITTAL NO. b.	ITEM NO c.	SPECIFICATION PARAGRAPH NUMBER d.	DESCRIPTION OF ITEM SUBMITTED e.	TYPE OF SUBMITTAL: DATA f.	DRAWINGS g.	INSTRUCTIONS h.	SCHEDULES i.	STATEMENTS j.	REPORTS k.	CERTIFICATES l.	SAMPLES m.	RECORDS n.	CLASSIFICATION: INFORMATION ONLY o.	GOVERNMENT APPROVED p.	REVIEWER q.	CONTRACTOR SCHEDULE DATES: SUBMIT r.	APPROVAL NEEDED BY s.	MATERIAL NEEDED BY t.	CONTRACTOR ACTION: CODE u.	DATE v.	SUBMIT TO GOVERN-MENT w.	GOVERNMENT ACTION: CODE x.	DATE y.	REMARKS z.

ENG FORM 4288-R, MAR 95 EDITION OF SEP 93 IS OBSOLETE. PAGE 1 OF ____ PAGES (Proponent: CEMP-CE)

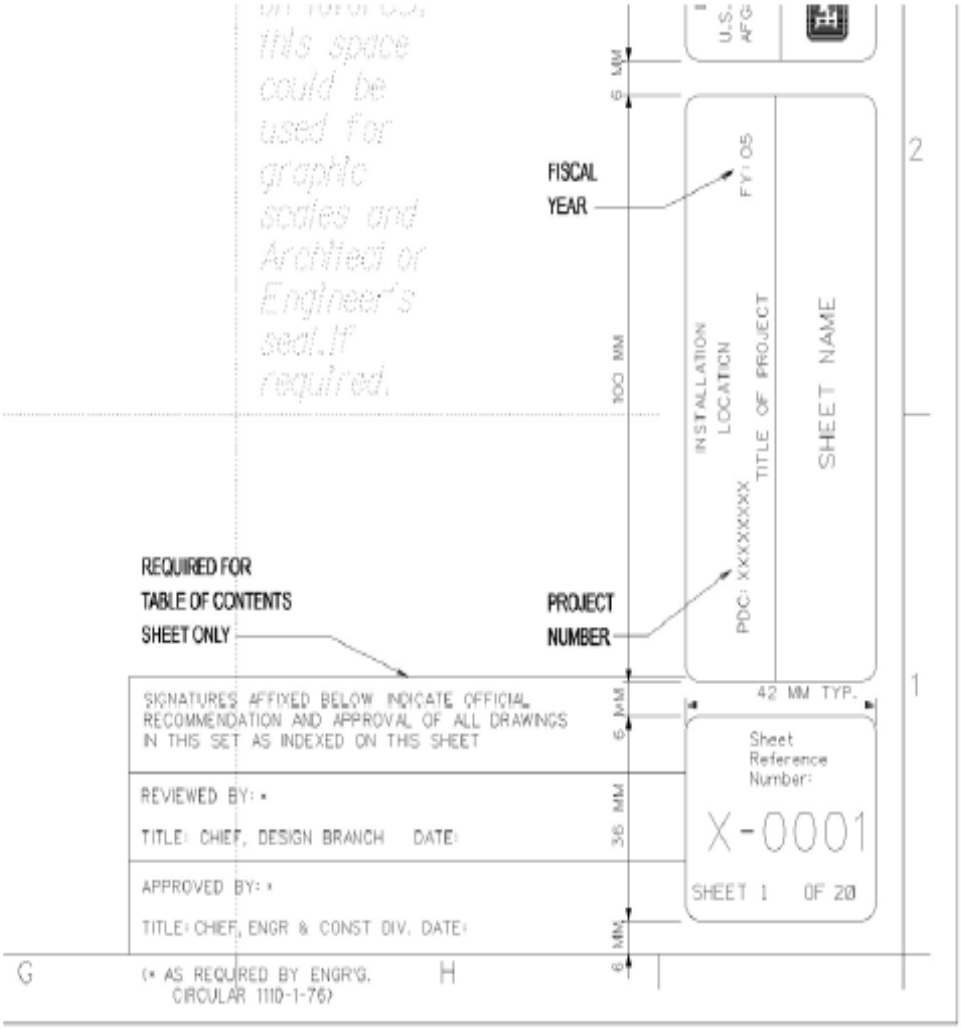

Figure 1- AED Title Block sheet number/description

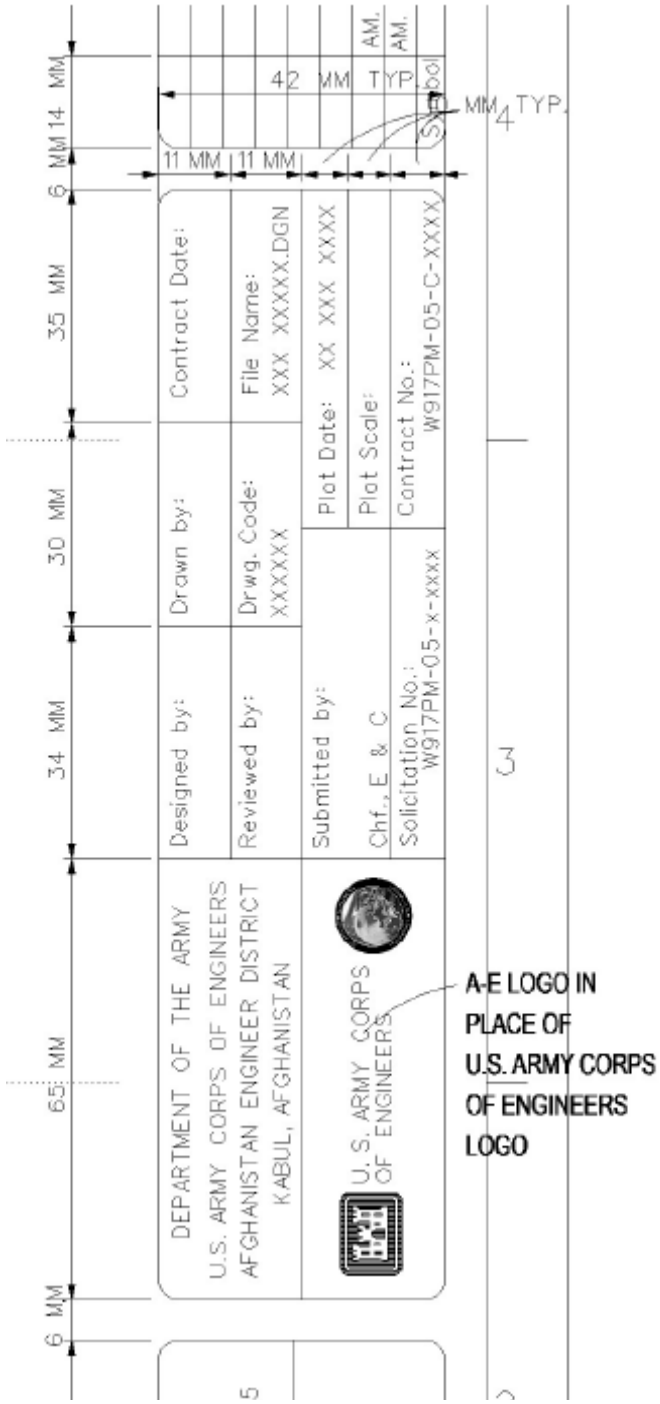

Figure 2- AED Title Block- A-E logo/designed by/reviewed by/submitted by

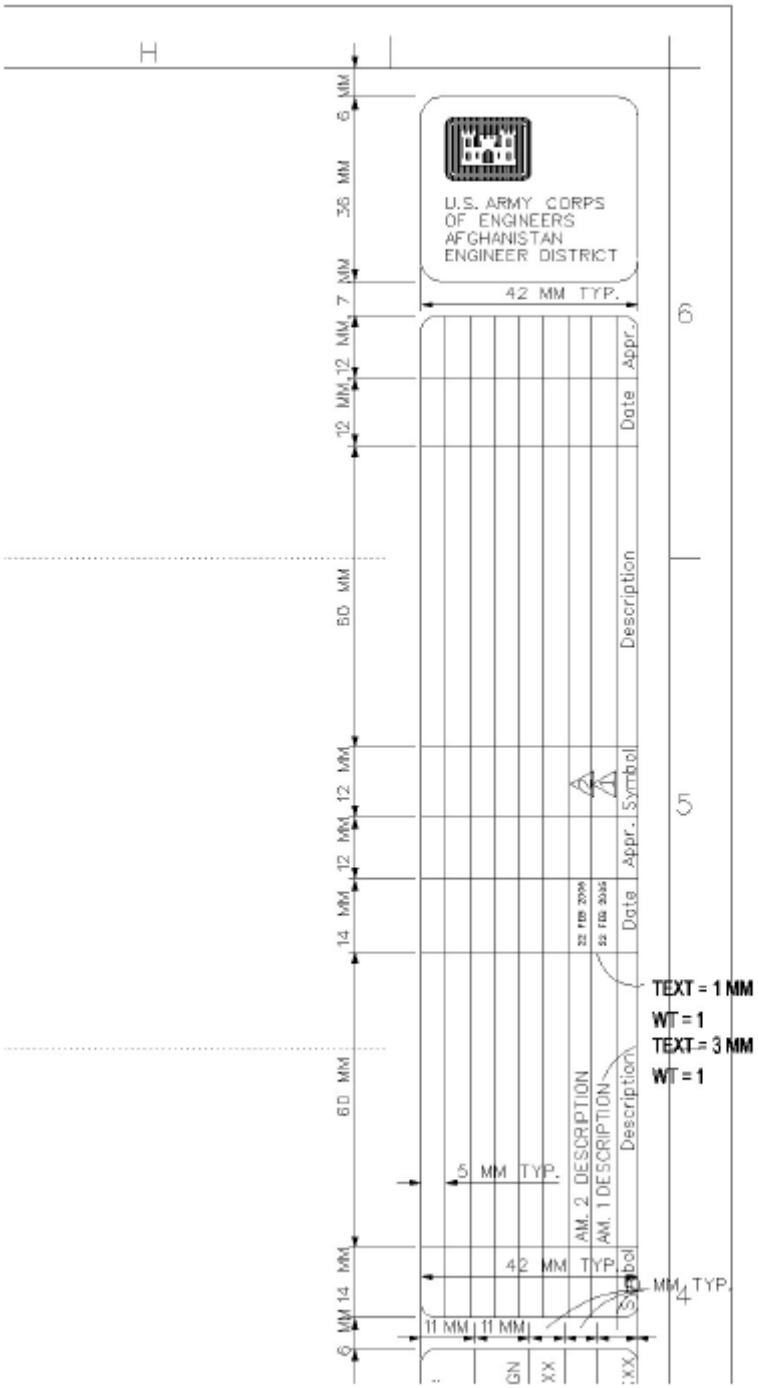

Figure 3- AED Title Block-Revisions Block Dimensioning

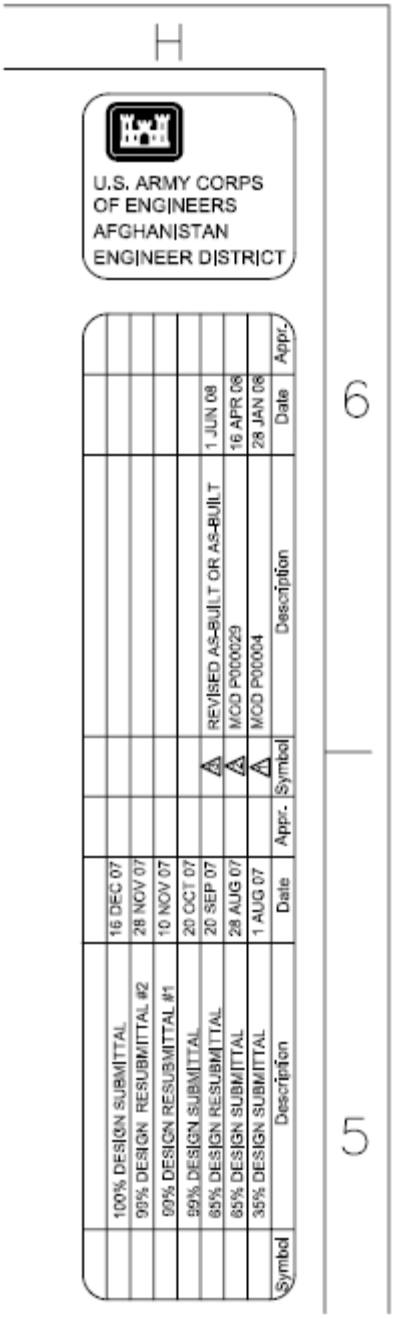

Figure 4- AED Title Block-Revisions Block Required Notations

FINISHED FORMAT SIZE

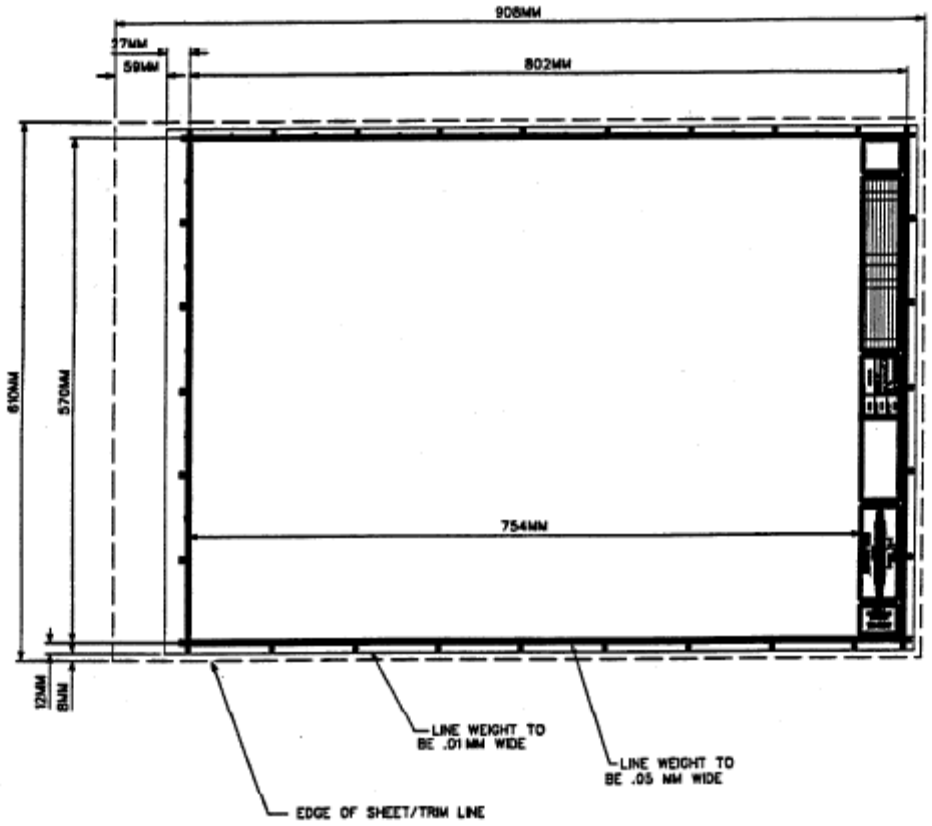

NOTES:

1. SEE FIGURES 6 THRU 9 FOR TITLE BLOCK DEFINITIONS.

Figure 5

SECTION 01415

METRIC MEASUREMENTS FOR SOUTH PARK IMPROVEMENTS

1.1 REFERENCES

The publications listed below form a part of this specification to the extent referenced. The publications are referred to within the text by the basic designation only.

ASTM INTERNATIONAL (ASTM)

ASTM E 621	(1994; R 1999e1) Use of Metric (SI) Units in Building Design and Construction (Committee E-6 Supplement to E380)
ASTM SI 10	(2002) American National Standard for Use of the International System of Units (SI): The Modern Metric System

1.2 GENERAL

This project includes metric units of measurements. The metric units used are the International System of Units (SI) developed and maintained by the General Conference on Weights and Measures (CGPM); the name International System of Units and the international abbreviation SI were adopted by the11th CGPM in 1960. A number of circumstances require that both metric SI units and English inch-pound (I-P) units be included in a section of the specifications. When both metric and I-P measurements are included, the section may contain measurements for products that are manufactured to I-P dimensions and then expressed in mathematically converted metric value(soft metric) or, it may contain measurements for products that are manufactured to an industry recognized rounded metric (hard metric)dimensions but are allowed to be substituted by I-P products to comply with the law. Dual measurements are also included to indicate industry and/or Government standards, test values or other controlling factors, such as the code requirements where I-P values are needed for clarity or to trace back to the referenced standards, test values or codes.

1.3 USE OF MEASUREMENTS IN SPECIFICATIONS

Measurements in specifications shall be either in SI or I-P units as indicated, except for soft metric measurements or as otherwise authorized. When only SI or I-P measurements are specified for a product, the product shall be procured in the specified units (SI or I-P) unless otherwise authorized by the Contracting Officer. The Contractor shall be responsible for all associated labor and materials when authorized to substitute one system of units for another and for the final assembly and performance of the specified work and/or products.

1.3.1 Hard Metric

A hard metric measurement is indicated by an SI value with no expressed correlation to an I-P value. Hard metric measurements are often used for field data such as distance from one point to another or distance above the floor. Products are considered to be hard metric when they are manufactured to metric dimensions or have an industry recognized metric designation.

1.3.2 Soft Metric

a. A soft metric measurement is indicated by an SI value which is a mathematical conversion of the I-P value shown in parentheses (e.g. 38.1 mm (1-1/2 inches)). Soft metric measurements are used for measurements pertaining to products, test values, and other situations where the I-P units are the standard for manufacture,

verification, or other controlling factor. The I-P value shall govern while the metric measurement is provided for information.

b. A soft metric measurement is also indicated for products that are manufactured in industry designated metric dimensions but are required by law to allow substitute I-P products. These measurements are indicated by a manufacturing hard metric product dimension followed by the substitute I-P equivalent value in parentheses (e.g., 190 x 190 x 390 mm (7-5/8 x 7-5/8 x 15-5/8inches)).

1.3.3 Neutral

A neutral measurement is indicated by an identifier which has no expressed relation to either an SI or an I-P value (e.g., American Wire Gage (AWG) which indicates thickness but in itself is neither SI nor I-P).

1.4 COORDINATION

Discrepancies, such as mismatches or product unavailability, arising from use of both metric and non-metric measurements and discrepancies between the measurements in the specifications and the measurements in the drawings shall be brought to the attention of the Contracting Officer for resolution.

1.5 RELATIONSHIP TO SUBMITTALS

Submittals for Government approval or for information only shall cover the SI or I-P products actually being furnished for the project. The Contractor shall submit the required drawings and calculations in the same units used in the contract documents describing the product or requirement unless otherwise instructed or approved. The Contractor shall use ASTM SI 10 and ASTM E 621 as the basis for establishing metric measurements required to be used in submittals.

-- End of Section --

SPECIFICATION SECTION 01451

CONTRACTOR QUALITY CONTROL FOR SOUTH PARK IMPROVEMENTS

PART 1: GENERAL

1.1 REFERENCES

The publications listed below form a part of this specification to the extent referenced. The publications are referred to within the text by the basic designation only.

U.S. ARMY CORPS OF ENGINEERS (USACE)

ER 1110-1-12 (1993)	Quality Management
EM 385-1-1	Safety and Health Requirements Manual

1.2 PAYMENT

Separate payment will not be made for providing and maintaining an effective Quality Control program, and all costs associated therewith shall be included in the applicable unit prices or lump-sum prices contained in the Bidding Schedule.

PART 2PRODUCTS (Not Applicable)

PART 3EXECUTION

3.1 GENERAL REQUIREMENTS

The Contractor is responsible for quality control and shall establish and maintain an effective quality control system in compliance with the Contract Clauses and this specification section. The quality control system shall consist of plans, procedures, and organization necessary to produce an end product which complies with the contract requirements. The system shall cover all construction operations, both onsite and offsite, and shall be keyed to the proposed construction sequence. The site project superintendent will be held responsible for the quality of work on the job and is subject to removal by the Contracting Officer for non-compliance with the quality requirements specified in the contract. The site project superintendent in this context shall be the highest level manager responsible for the overall construction activities at the site, including quality and production. The site project superintendent shall maintain a physical presence at the site at all times, except as otherwise acceptable to the Contracting Officer, and shall be responsible for all construction and construction related activities at the site.

3.2 CQM TRAINING REQUIREMENT

Before project design and construction begin, the Contractor's Quality Control Manager is required to have completed the U.S. Army Corps of Engineers CQM course, or equivalent. The Construction Trades Training Center (CTTC) in Kabul, Afghanistan provides a course that satisfies the requirement. Courses are offered at regular intervals. For enrollment and course information contact CTTC at the following:

Mhd. Haris
e-mail: mharis@afghanreconstruction.org

Telephone: 0700 08 0602

Pervaiz
e-mail: adpzmuj@yahoo.com
Telephone: 0700 61 3133

3.3 QUALITY CONTROL PLAN

The Contractor shall furnish for review by the Government, not later than five (5) days after receipt of Notice-to-Proceed (NTP) the proposed Contractor Quality Control (CQC) Plan. The plan shall identify personnel, procedures, control, instructions, records, and forms to be used.

3.2.1 Content of the CQC Plan

The CQC Plan shall include, as a minimum, the following to cover all construction operations, both on site and off-site, including work by subcontractors, fabricators, suppliers and purchasing agents:

a. A description of the quality control organization, including a chart showing lines of authority and acknowledgment that the CQC staff shall implement the three phase control system for all aspects of the work specified. The staff shall include a CQC System Manager who shall report to the project superintendent.

b. The name, qualifications (in resume format), duties, responsibilities, and authorities of each person assigned a CQC function.

c. A copy of the letter to the CQC System Manager signed by an authorized official of the firm which describes the responsibilities and delegates sufficient authorities to adequately perform the functions of the CQC System Manager, including authority to stop work which is not in compliance with the contract. The CQC System Manager shall issue letters of direction to all other various quality control representatives outlining duties, authorities, and responsibilities. Copies of these letters shall also be furnished to the Government.

d. Procedures for scheduling, reviewing, certifying, and managing submittals, including those of subcontractors, offsite fabricators, suppliers, consultants, and purchasing agents. These procedures shall be in accordance with Specification 01335 SUBMITTAL PROCEDURES.

e. Control, verification, and acceptance testing procedures for each specific test to include the test name, specification paragraph requiring test, feature of work to be tested, test frequency, and person responsible for each test.

f. Procedures for tracking preparatory, initial, and follow-up control phases and control, verification, and acceptance tests including documentation.

g. Procedures for tracking construction deficiencies from identification through acceptable corrective action. These procedures shall establish verification that identified deficiencies have been corrected.

h. Reporting procedures, including proposed reporting formats.

i. A list of the definable features of work. A definable feature of work is a task which is separate and distinct from other tasks, has separate control requirements, and may be identified by different trades or disciplines, or it may be work by the same trade in a different environment. Although each section of the specifications may generally be considered as a definable

feature of work, there are frequently more than one definable features under a particular section. This list will be agreed upon during the coordination meeting.

3.2.2 Additional Requirements for Design Quality Control (DQC) Plan

The following additional requirements apply to the Design Quality Control

(DQC) plan:

(1) The Contractor shall provide and maintain a Design Quality Control (DQC) Plan as an effective quality control program which will assure that all services required by this design contract are performed and provided in a manner that meets professional architectural and engineering quality standards. As a minimum, all documents shall be technically reviewed by competent, independent reviewers identified in the DQC Plan. The same element that produced the product shall not perform the independent technical review (ITR). The Contractor shall correct errors and deficiencies in the design documents prior to submitting them to the Government.

(2) The Contractor shall include the design schedule in the master project schedule, showing the sequence of events involved in carrying out the project design tasks within the specific contract period. This should be at a detailed level of scheduling sufficient to identify all major design tasks, including those that control the flow of work. The schedule shall include review and correction periods associated with each item. This should be a forward planning as well as a project monitoring tool. The schedule reflects calendar days and not dates for each activity. If the schedule is changed, the Contractor shall submit a revised schedule reflecting the change within 7 calendar days. The Contractor shall include in the DQC Plan the discipline-specific checklists to be used during the design and quality control of each submittal. These completed checklists shall be submitted at each design phase as part of the project documentation. Example checklists can be found in ER 1110-1-12.

(3) The DQC Plan shall be implemented by an Design Quality Control Manager who has the responsibility of being cognizant of and assuring that all documents on the project have been coordinated. This individual shall be a person who has verifiable engineering or architectural design experience and is a registered professional engineer or architect. The Contractor shall notify the Contracting Officer, in writing, of the name of the individual, and the name of an alternate person assigned to the position.

The Contracting Officer will notify the Contractor in writing of the acceptance of the DQC Plan. After acceptance, any changes proposed by the Contractor are subject to the acceptance of the Contracting Officer.

3.2.3 Acceptance of Plan

Acceptance of the Contractor's plan is required prior to the start of construction. Acceptance is conditional and will be predicated on satisfactory performance during the construction. The Government reserves the right to require the Contractor to make changes in the CQC plan and operations including removal of personnel, as necessary, to obtain the quality specified.

3.2.4 Notification of Changes

Notification of Changes. After acceptance of the QC plan, the Contractor shall notify the Contracting Officer in writing a minimum of seven calendar days prior to any proposed change. Proposed changes are subject to acceptance by the Contracting Officer.

3.3 COORDINATION MEETING

After the Pre-construction Conference, before start of construction, and prior to acceptance by the Government of the Quality Control Plan, the Contractor shall meet with the Contracting Officer or

Authorized Representative and discuss the Contractor's quality control system. The CQC Plan shall be submitted for review a minimum of 5 calendar days prior to the Coordination Meeting. During the meeting, a mutual understanding of the system details shall be developed, including the forms for recording the CQC operations, control activities, testing, administration of the system for both on-site and off-site work, and the interrelationship of Contractor's Management and control with the Government's Quality Assurance. Minutes of the meeting shall be prepared by the Government and signed by both the Contractor and the Contracting Officer. The minutes shall become a part of the contract file. There may be occasions when subsequent conferences will be called by either party to reconfirm mutual understandings and/or address deficiencies in the CQC system or procedures, which may require corrective action by the Contractor.

3.4 QUALITY CONTROL ORGANIZATION

3.4.1 Personnel Requirements

The requirements for the CQC organization are a CQC System Manager, and sufficient number of additional qualified personnel to ensure safety and contract compliance. Personnel identified in the technical provisions as requiring specialized skills to assure the required work is being performed properly will also be included as part of the CQC organization. The Contractor's CQC staff shall maintain a presence at the site at all times during progress of the work and have complete authority and responsibility to take any action necessary to ensure contract compliance. The CQC staff shall be subject to acceptance by the Contracting Officer. The Contractor shall provide adequate office space, filing systems and other resources as necessary to maintain an effective and fully functional CQC organization. Complete records of all letters, material submittals, shop drawing submittals, schedules and all other project documentation shall be promptly furnished to the CQC organization by the Contractor. The CQC organization shall be responsible to maintain these documents and records at the site at all times, except as otherwise acceptable to the Contracting Officer.

3.4.2 CQC System Manager

The Contractor shall identify an individual within his organization at the site of the work who shall be responsible for overall management of the CQC and have the authority to act in all CQC matters for the Contractor. The CQC system manager shall be a graduate engineer, graduate architect, or a graduate construction manager, with experience on construction projects similar in type to this contract OR a construction person with a minimum of ten (10) years in related work. The CQC System Manager shall be on the site at all times during construction and shall be employed by the Contractor. The CQC System Manager shall be assigned no other duties. An alternate for the CQC System Manager will be identified in the plan to serve in the event of the CQC system manager's absence. The requirements for the alternate will be the same as for the designated CQC manager.

3.4.3 Not Used.

3.4.4 Additional Requirement

In addition to the above experience and/or education requirements, the CQC System Manager shall have completed the course entitled "Construction Quality Management For Contractors". This course is periodically offered by the government, and inquiries as to the next course offering may be directed to the local construction field office.

3.4.5 Organizational Changes

The Contractor shall maintain the CQC staff at full strength at all times. When it is necessary to make changes to the CQC staff, the Contractor shall revise the CQC Plan to reflect the changes and submit the changes to the Contracting Officer for acceptance.

3.5 SUBMITTALS AND DELIVERABLES

Submittals, if needed, shall be made as specified in the STR titled SUBMITTAL PROCEDURES. The CQC organization shall be responsible for certifying that all submittals and deliverables are in compliance with the contract requirements.

3.6 CONTROL

Contractor Quality Control is the means by which the Contractor ensures that the construction, to include that of subcontractors and suppliers, complies with the requirements of the contract. At least three phases of control shall be conducted by the CQC System Manager for each definable feature of the construction work as follows:

3.6.1 Preparatory Phase.

This phase shall be performed prior to beginning work on each definable feature of work, after all required documents and materials are approved/accepted, and after copies are at the work site. This phase shall include:

a. A review of each paragraph of applicable specifications, reference codes, and standards. A copy of those sections of referenced codes and standards, in the English language unless specifically approved otherwise by the Contracting Officer, applicable to that portion of the work to be accomplished in the field shall be made available by the Contractor at the preparatory inspection. These copies shall be maintained in the field and available for use by Government personnel until final acceptance of the work.

b. A review of the contract drawings.

c. A check to assure that all materials and/or equipment have been tested, submitted, and approved.

d. A check to assure that provisions have been made to provide required control inspection and testing.

e. Examination of the work area to assure that all required preliminary work has been completed and is in compliance with the contract.

f. A physical examination of required materials, equipment, and sample work to verify that they are on hand, conform to approved shop drawings or submitted data, and are properly stored.

g. Reviews of the appropriate activity hazard analysis to ensure safety requirements are met.

h. Discussion of procedures for constructing the work including repetitive deficiencies, construction tolerances and workmanship standards for that feature of work.

i. A check to ensure that the Contracting Officer has accepted the portion of the plan for the work to be performed.

j. Discussion of the initial control phase.

k. The Government shall be notified at least 24 hours in advance of beginning any of the required action of the preparatory phase. This phase shall include a meeting conducted by the CQC system manager and attended by the superintendent, other CQC personnel (as applicable), and the foreman responsible for the definable feature. The results of the

preparatory phase actions shall be documented by separate minutes prepared by the CQC system manager and attached to the daily QC report. The Contractor shall instruct applicable workers as to the acceptable level of workmanship required in order to meet contract specifications.

3.6.2 Initial Phase.

This phase shall be accomplished at the beginning of a definable feature of work. The following shall be accomplished:

a. A check of preliminary work to ensure that it is in compliance with contract requirements. Review minutes of the preparatory meeting.

b. Verification of full contract compliance. Verify required control inspection and testing.

c. Establish level of workmanship and verify that it meets minimum acceptable workmanship standards. Compare with sample panels as appropriate.

d. Resolve all differences.

e. Check safety to include compliance with and upgrading of the safety plan and activity hazard analysis. Review the activity analysis with each worker.

f. The Government shall be notified at least 24 hours in advance of beginning the initial phase. Separate minutes of this phase shall be prepared by the CQC system manager and attached to the daily QC report. Exact location of initial phase shall be indicated for future reference and comparison with follow-up phases.

g. The initial phase should be repeated for each new crew to work on-site, or any time acceptable specified quality standards are not being met.

3.6.3 Follow-up Phase.

Daily checks shall be performed to assure continuing compliance with contract requirements, including control testing, until completion of the particular feature of work. The checks shall be made a matter of record in the CQC documentation. Final follow-up checks shall be conducted, and all noted deficiencies corrected, prior to the start of additional features of work that may be affected by the deficient work. The Contractor shall not build upon nor conceal non-conforming work.

3.6.4 Additional Preparatory and Initial Phases

Additional preparatory and initial phases may be required by the Contracting Officer on the same definable features of work if the quality of on-going work is unacceptable; if there are changes in the applicable QC staff or in the on-site production supervision or work crew; if work on a definable feature is resumed after a substantial period of inactivity; or if other problems develop.

3.7 TESTS

3.7.1 Testing Procedure

The Contractor shall perform tests specified or required to verify that control measures are adequate to provide a product that conforms to contract requirements. Upon request, the Contractor shall furnish to the Government duplicate samples of test specimens for possible testing by the

Government. Costs incidental to the transportation of samples or materials shall be borne by the Contractor.

Testing includes operation and/or acceptance tests when specified. A list of tests to be performed shall be furnished as a part of the CQC plan. The list shall give the test name, frequency, specification paragraph containing the test requirements, the personnel and laboratory responsible for each type of test, and an estimate of the number of tests required. The Contractor shall perform the following activities and record and provide the following data:

a. Verify that testing procedures comply with contract requirements.

b. Verify that facilities and testing equipment are available and comply with testing standards.

c. Check test instrument calibration data against certified standards.

d. Verify that recording forms and test identification control number system, including all of the test documentation requirements, have been prepared.

e. Results of all tests taken, both passing and failing tests, shall be recorded on the Quality Control report for the date taken. Specification paragraph/item reference, location where tests were taken, and the sequential control number identifying the test will be given. Actual test reports may be submitted later, if approved by the Contracting Officer, with a reference to the test number and date taken. An information copy of tests performed by an off-site or commercial test facility will be provided directly to the Contracting Officer. Failure to submit timely test reports, as stated, may result in nonpayment for related work performed and disapproval of the test facility for this contract.

3.8 COMPLETION INSPECTION

3.8.1 Punch-Out Inspection

Near the end of the work, or any increment of the work established by a time stated in the SPECIAL CONTRACT REQUIREMENTS Clause, "Commencement, Prosecution, and Completion of Work", or by the specifications, the CQC Manager shall conduct an inspection of the work. A punch list of items which do not conform to the approved drawings and specifications shall be prepared and included in the CQC documentation, as required by paragraph DOCUMENTATION. The list of deficiencies shall include the estimated date by which the deficiencies will be corrected. The CQC System Manager or staff shall make a second inspection to ascertain that all deficiencies have been corrected. Once this is accomplished, the Contractor shall notify the Government that the facility is ready for the Government Pre-Final inspection.

3.8.2 Pre-Final Inspection

The Government will perform the pre-final inspection to verify that the facility is complete and ready to be occupied. A Government Pre-Final Punch List may be developed as a result of this inspection. The Contractor's CQC System Manager shall ensure that all items on this list have been corrected before notifying the Government, so that a Final inspection with the customer can be scheduled. Any items noted on the Pre-Final inspection shall be corrected in a timely manner. These inspections and any deficiency corrections required by this paragraph shall be accomplished within the time slated for completion of the entire work or any particular increment of the work if the project is divided into increments by separate completion dates.

3.8.3 Final Acceptance Inspection

The Contractor's Quality Control Inspection personnel, plus the superintendent or other primary management person, and the Contracting Officer's Representative shall be in attendance at the final acceptance inspection. Additional Government personnel including, but not limited to, those from Base/Post Civil Facility Engineer user groups, and major commands may also be in attendance. The final acceptance inspection will be formally scheduled by the Contracting Officer based upon results of the Pre-Final inspection. Notice shall be given to the Contracting Officer at least 14 days prior to the final acceptance inspection and shall include the Contractor's assurance that all specific items previously identified to the Contractor as being unacceptable, along with all remaining work performed under the contract, will be complete and acceptable by the date scheduled for the final acceptance inspection. Failure of the Contractor to have all contract work acceptably complete for this inspection will be cause for the Contracting Officer to bill the Contractor for the Government's additional inspection cost in accordance with the contract clause titled "Inspection of Construction".

3.9 DOCUMENTATION

The Contractor shall maintain current records providing factual evidence that required quality control activities and/or tests have been performed. These records shall include the work of subcontractors and suppliers and shall be on an acceptable form that includes, as a minimum, the following information:

a. Contractor/subcontractor and their area of responsibility.

b. Operating plant/equipment with hours worked, idle, or down for repair.

c. Work performed each day, giving location, description, and by whom. When Network Analysis (NAS) is used, identify each phase of work performed each day by NAS activity number.

d. Test and/or control activities performed with results and references to specifications/drawings requirements. The control phase shall be identified (Preparatory, Initial, Follow-up). List of deficiencies noted, along with corrective action.

e. Quantity of materials received at the site with statement as to acceptability, storage, and reference to specifications/drawings requirements.

f. Submittals and deliverables reviewed, with contract reference, by whom, and action taken.

g. Offsite surveillance activities, including actions taken.

h. Job safety evaluations stating what was checked, results, and instructions or corrective actions.

i. Instructions given/received and conflicts in plans and/or specifications.

j. Contractor's verification statement.

These records shall indicate a description of trades working on the project; the number of personnel working; weather conditions encountered; and any delays encountered. These records shall cover both conforming and deficient features and shall include a statement that equipment and materials incorporated in the work and workmanship comply with the contract. The original and one copy of these records in report form shall be furnished to the Government daily within forty-eight (48) hours after the date covered by the report, except that reports need not be submitted for days on which no work is performed. As a minimum, one report shall be prepared and submitted for every 7 days of no work and on the last day of a no work period. All calendar days shall be accounted for throughout the

life of the contract. The first report following a day of no work shall be for that day only. Reports shall be signed and dated by the CQC System Manager. The report from the CQC System Manager shall include copies of test reports and copies of reports prepared by all subordinate quality control personnel.

3.10 SAMPLE FORMS

In accordance with Specification 01312 QUALITY CONTROL SYSTEM, the contractor shall use the forms produced by and printed from QCS. Samples of any forms required to meet the requirements of this section which are not produced by that system shall be included in the contractors Quality Control Plan.

3.11 NOTIFICATION OF NONCOMPLIANCE

The Contracting Officer will notify the Contractor of any detected noncompliance with the foregoing requirements. The Contractor shall take immediate corrective action after receipt of such notice. Such notice, when delivered to the Contractor at the work site, shall be deemed sufficient for the purpose of notification. If the Contractor fails or refuses to comply promptly, the Contracting Officer may issue an order stopping all or part of the work until satisfactory corrective action has been taken. No part of the time lost due to such stop orders shall be made the subject of claim for extension of time or for excess costs or damages by the Contractor.

-- End of Section --

SECTION 01525

SAFETY AND OCCUPATIONAL HEALTH REQUIREMENTS FOR SOUTHPARK IMPROVEMENTS

PART 1 GENERAL

For contractor safety on projects associated with this program, compliance with EM 385-1-1 safety requirements will be the long-term goal reached by growing a safety culture. This compliance will, by necessity, be achieved through a phased-in process. In the Commander's letter at the preface of the EM 385-1-1, he acknowledges that in OCONUS locations, strict compliance with the manual may not be possible – and through the hazard analysis process, safety measures can be developed to attain the same degree of safety.

This specification consists of two parts:

1) Sections 1.1 through 3.12.1, which are the standard safety specifications for work in Europe District and;

2) Appendix A, Phasing approach for safety in emerging countries where there is little or no national safety standards.

1.1 REFERENCES

The publications listed below form a part of this specification to the extent referenced. The publications are referred to within the text by the basic designation only.

AMERICAN NATIONAL STANDARDS INSTITUTE (ANSI)

ANSI A10.32	Personal Fall Protection - Safety Requirements for Construction and Demolition Operations
ANSI Z359.1(1992; R 1999)	Safety Requirements for Personal Fall Arrest Systems, Subsystems and Components
ANSI/ASSE A10.34(2001)	Protection of the Public on or Adjacent to Construction Sites
ASME B30.3(1996)	Construction Tower Cranes

ASME INTERNATIONAL (ASME)

ASME B30.22(2000)	Articulating Boom Cranes
ASME B30.5(2004)	Mobile and Locomotive Cranes

NATIONAL FIRE PROTECTION ASSOCIATION (NFPA)

NFPA 10(2002)	Portable Fire Extinguishers
NFPA 241(2000)	Safeguarding Construction, Alteration, and Demolition Operations
NFPA 51B(2003)	Fire Prevention During Welding, Cutting, and Other Hot Work

NFPA 70(2005)	National Electrical Code
NFPA 70E(2004)	Electrical Safety in the Workplace

U.S. ARMY CORPS OF ENGINEERS (USACE)

EM 385-1-1(2003) Safety	Safety and Health Requirements

U.S. NATIONAL ARCHIVES AND RECORDS ADMINISTRATION (NARA)

29 CFR 1910	Occupational Safety and Health Standards (OSHA)
29 CFR 1910.146	Permit-required Confined Spaces
29 CFR 1915	Confined and Enclosed Spaces and Other Dangerous Atmospheres in Shipyard Employment
29 CFR 1919	Gear Certification
29 CFR 1926	Safety and Health Regulations for Construction
29 CFR 1926.500	Fall Protection

1.2 SUBMITTALS

Government approval is required for submittals with a "G" designation; submittals not having a "G" designation are for information only. When used, a designation following the "G" designation identifies the office that will review the submittal for the Government. The following shall be submitted in accordance with SR SUBMITTAL PROCEDURES:

SD-01 Preconstruction Submittals

Accident Prevention Plan (APP); G, ACC

Activity Hazard Analysis (AHA); G, ACC

Crane Critical Lift Plan; G, ACC

Proof of qualification for Crane Operators; G, ACC

SD-06 Test Reports

Reports: Submit reports as their incidence occurs, in accordance with the requirements of the paragraph entitled, "Reports."

Accident Reports

Monthly Exposure Reports

Crane Reports

Regulatory Citations and Violations

SD-07 Certificates

Confined Space Entry Permit

Contractor Safety Self-Evaluation Checklist; G, ACC

Submit one copy of each permit/certificate attached to each Daily Quality Control Report.

1.3 DEFINITIONS

a. Competent Person for Fall Protection. A person who is capable of identifying hazardous or dangerous conditions in the personal fall arrest system or any component thereof, as well as their application and use with related equipment, and has the authority to take prompt corrective measures to eliminate the hazards of falling.

b. High Visibility Accident. Any mishap which may generate publicity and/or high visibility.

c. Medical Treatment. Treatment administered by a physician or by registered professional personnel under the standing orders of a physician. Medical treatment does not include first aid treatment even through provided by a physician or registered personnel.

d. Qualified Person for Fall Protection. A person with a recognized degree or professional certificate, extensive knowledge, training and experience in the field of fall protection who is capable of performing design, analysis, and evaluation of fall protection systems and equipment.

e. Recordable Injuries or Illnesses. Any work-related injury or illness that results in:

(1) Death, regardless of the time between the injury and death, or the length of the illness;

(2) Days away from work (any time lost after day of injury/illness onset);

(3) Restricted work;

(4) Transfer to another job;

(5) Medical treatment beyond first aid;

(6) Loss of consciousness; or

(7) A significant injury or illness diagnosed by a physician or other licensed health care professional, even if it did not result in (1) through (6) above.

f. "USACE" property and equipment specified in USACE EM 385-1-1 should be interpreted as Government property and equipment.

1.4 DRUG PREVENTION PROGRAM

Conduct a proactive drug and alcohol use prevention program for all workers, prime and subcontractor, on the site. Ensure that no employee uses illegal drugs or consumes alcohol during work hours. Ensure there are no employees under the influence of drugs or alcohol during work hours. After accidents, collect blood, urine, or saliva specimens and test the injured and involved employees for the influence of drugs and alcohol. A copy of the test shall be made available to the Contracting Officer upon request.

1.5 REGULATORY REQUIREMENTS

In addition to the detailed requirements included in the provisions of this contract, work performed shall comply with USACE EM 385-1-1, and in particular, the requirements of the European Union Council Directive 92/57/EEC of 24 June 1992 on the implementation of minimum safety and health requirements at temporary or mobile construction sites. Submit matters of interpretation of standards to the appropriate administrative agency for resolution before starting work. Where the requirements of this specification, applicable laws, criteria, ordinances, regulations, and referenced documents vary, the most stringent requirements shall apply.

1.6 SITE QUALIFICATIONS, DUTIES AND MEETINGS

1.6.1 Personnel Qualifications

1.6.1.1 Site Safety and Health Officer (SSHO)

Site Safety and Health Officer (SSHO) shall be provided at the work site at all times to perform safety and occupational health management, surveillance, inspections, and safety enforcement for the Contractor. The Contractor Quality Control (QC) person can only be the SSHO on this project if approved by the Contracting Officer. Any project exceeding 1 Million US dollars in value shall have a full time SSHO. The SSHO shall meet the following requirements: A minimum of 5 years safety work on similar projects; 30-hour OSHA construction safety class or European Union equivalent within the last 5 years; an average of at least 24 hours of formal safety training each year for the past 5 years. Competent person training as needed.

1.6.1.2 Competent Person for Confined Space Entry

Provide a competent person meeting the requirements of EM 385-1-1 who is assigned in writing by the Government Designated Authority (GDA) to assess confined spaces and who possesses demonstrated knowledge, skill and ability to:

a. Identify the structure, location, and designation of confined and permit-required confined spaces where work is done;

b. Calibrate and use testing equipment including but not limited to, oxygen indicators, combustible gas indicators, carbon monoxide indicators, and carbon dioxide indicators, and to interpret accurately the test results of that equipment;

c. Perform all required tests and inspections specified in Section 06.I of EM 385-1-1;

d. Assess hazardous conditions including atmospheric hazards in confined space and adjacent spaces and specify the necessary protection and precautions to be taken;

e. Determine ventilation requirements for confined space entries and operations;

f. Assess hazards associated with hot work in confined and adjacent space and determine fire watch requirements; and,

g. Maintain records required.

1.6.1.3 Crane Operators

Crane operators shall meet the requirements in USACE EM 385-1-1, Section 16 and Appendix G. In addition, crane operators shall be designated as qualified by a source that qualifies crane operators (i.e., union, a government agency, or and organization that tests and qualifies crane operators). Proof of current qualification shall be provided.

1.6.2 Personnel Duties

1.6.2.1 Site Safety and Health Officer (SSHO)/Superintendent

a. Conduct daily safety and health inspections and maintain a written log which includes area/operation inspected, date of inspection, identified hazards, recommended corrective actions, estimated and actual dates of corrections. Safety inspection logs shall be attached to the Contractors' daily quality control report.

b. Conduct mishap investigations and complete required reports. Maintain an accident/injury log such as the OSHA Form 300 or host nation equivalent, and Daily Production reports for prime and sub-contractors.

c. Maintain applicable safety reference material on the job site.

d. Attend the pre-construction conference, pre-work meetings including preparatory inspection meeting, and periodic in-progress meetings.

e. Implement and enforce accepted APPS and AHAs.

f. Maintain a safety and health deficiency tracking system that monitors outstanding deficiencies until resolution. A list of unresolved safety and health deficiencies shall be posted on the safety bulletin board.

g. Ensure sub-contractor compliance with safety and health requirements.

Failure to perform the above duties will result in dismissal of the superintendent and/or SSHO, and a project work stoppage. The project work stoppage will remain in effect pending approval of a suitable replacement.

1.6.3 Meetings

1.6.3.1 Preconstruction Conference

a. Contractor representatives who have a responsibility or significant role in accident prevention on the project shall attend the preconstruction conference. This includes the project superintendent, site safety and health officer, quality control supervisor, or any other assigned safety and health professionals who participated in the development of the APP (including the Activity Hazard Analyses (AHAs) and special plans, program and procedures associated with it).

b. The Contractor shall discuss the details of the submitted APP to include incorporated plans, programs, procedures and a listing of anticipated AHAs that will be developed and implemented during the performance of the contract. This list of proposed AHAs will be reviewed at the conference and an agreement will be reached between the Contractor and the Contracting Officer's representative as to which phases will require an analysis. In addition, a schedule for the preparation, submittal, review, and acceptance of AHAs shall be established to preclude project delays.

c. Deficiencies in the submitted APP will be brought to the attention of the Contractor at the preconstruction conference, and the Contractor shall revise the plan to correct deficiencies and re-submit it for acceptance. Work shall not begin until there is an accepted APP.

d. The functions of a Preconstruction conference may take place at the Post-Award Kickoff meeting for Design Build Contracts.

1.6.3.2 Safety Meetings

Shall be conducted and documented as required by EM 385-1-1. Minutes showing contract title, signatures of attendees and a list of topics discussed shall be attached to the Contractors' daily quality control report.

1.7 TRAINING

1.7.1 New Employee Indoctrination

New employees (prime and sub-contractor) will be informed of specific site hazards before they begin work. Documentation of this orientation shall be kept on file at the project site.

1.7.2 Periodic Training

Provide Safety and Health Training in accordance with USACE EM 385-1-1 and the accepted APP. Ensure all required training has been accomplished for all onsite employees.

1.7.3 Training on Activity Hazard Analysis (AHA)

Prior to beginning a new phase, training will be provided to all affected

1.8 ACCIDENT PREVENTION PLAN (APP)

The Contractor shall use a qualified person to prepare the written site-specific APP in both English and in the host nation language. Prepare the APP in accordance with the format and requirements of USACE EM 385-1-1 and as supplemented herein. Cover all paragraph and subparagraph elements in USACE EM 385-1-1, Appendix A, "Minimum Basic Outline for Accident Prevention Plan". Specific requirements for some of the APP elements are described below. The APP shall be job-specific and shall address any unusual or unique aspects of the project or activity for which it is written. The APP shall interface with the Contractor's overall safety and health program. Any portions of the Contractor's overall safety and health program referenced in the APP shall be included in the applicable APP element and made site-specific. The Government considers the Prime Contractor to be the "controlling authority" for all work site safety and health of the subcontractors. Contractors are responsible for informing their subcontractors of the safety provisions under the terms of the contract and the penalties for noncompliance, coordinating the work to prevent one craft from interfering with or creating hazardous working conditions for other crafts, and inspecting subcontractor operations to ensure that accident prevention responsibilities are being carried out. The APP shall be signed by the person and firm (senior person) preparing the APP, the Contractor, the on-site superintendent, the designated site safety and health officer.

Submit the APP to the Contracting Officer 15 calendar days prior to the date of the preconstruction conference for acceptance. Work cannot proceed without an accepted APP.

Once accepted by the Contracting Officer, the APP and attachments will be enforced as part of the contract. Disregarding the provisions of this contract or the accepted APP will be cause for stopping of work, at the discretion of the Contracting Officer, until the matter has been rectified.

Once work begins, changes to the accepted APP shall be made with the knowledge and concurrence of the Contracting Officer, project superintendent, SSHO and quality control manager. Should any hazard become evident, stop work in the area, secure the area, and develop a plan to remove the hazard. Notify the Contracting Officer within 24 hours of discovery. In the interim, all necessary action shall be taken to restore and maintain safe working conditions in order to safeguard onsite personnel, visitors, the public, and the environment.

Copies of the accepted plan will be maintained at the Contracting Officer's office and at the job site.

The APP shall be continuously reviewed and amended, as necessary, throughout the life of the contract. Unusual or high-hazard activities not identified in the original APP shall be incorporated in the plan as they are discovered.

1.8.1 EM 385-1-1 Contents

In addition to the requirements outlines in Appendix A of USACE EM 385-1-1, the following is required:

a. Names and qualifications (resumes including education, training, experience and certifications) of all site safety and health personnel designated to perform work on this project to include the designated site safety and health officer and other competent and qualified personnel to be. The duties of each position shall be specified.

b. Qualifications of competent and of qualified persons. As a minimum, competent persons shall be designated and qualifications submitted for each of the following major areas: excavation; scaffolding; fall protection; hazardous energy; confined space; health hazard recognition, evaluation and control of chemical, physical and biological agents; personal protective equipment and clothing to include selection, use and maintenance.

c. Confined Space Entry Plan. Develop a confined space entry plan in accordance with USACE EM 385-1-1, Section 06.I, and any other federal, state and local regulatory requirements identified in this contract. Identify the qualified person's name and qualifications, training, and experience. Delineate the qualified person's authority to direct work stoppage in the event of hazardous conditions. Include procedure for rescue by contractor personnel and the coordination with emergency responders. (If there is no confined space work, include a statement that no confined space work exists and none will be created.)

d. Crane Critical Lift Plan. Prepare and sign weight handling critical lift plans for lifts over 75 percent of the capacity of the crane or hoist (or lifts over 50 percent of the capacity of a barge mounted mobile crane's hoists) at any radius of lift; lifts involving more than one crane or hoist; lifts of personnel; and lifts involving non-routine rigging or operation, sensitive equipment, or unusual safety risks. The plan shall be submitted 15 calendar days prior to on-site work and include the requirements of USACE EM 385-1-1, paragraph 16.C.18. and the following:

   (1) For lifts of personnel, the plan shall demonstrate compliance with the requirements of EM 385-1-1, Section 22.F.

   (2) For barge mounted mobile cranes, barge stability calculations identifying barge list and trim based on anticipated loading; and load charts based on calculated list and trim. The amount of list and trim shall be within the crane manufacturer's requirements.

e. Fall Protection and Prevention (FP&P) Plan. The plan shall be site specific and address all fall hazards in the work place and during different phases of construction. It shall address how to protect and prevent workers from falling to lower levels when they are exposed to fall hazards above 1.8 m (6 feet). A qualified person for fall protection shall prepare and sign the plan. The plan shall include fall protection and prevention systems, equipment and methods employed for every phase of work, responsibilities, assisted rescue, self-rescue and evacuation procedures, training requirements, and monitoring methods. Fall Protection and Prevention Plan shall be revised every six months for lengthy projects, reflecting any changes during the course of construction due to changes in personnel, equipment, systems or work habits. The accepted Fall Protection and Prevention Plan shall be kept and maintained at the

job site for the duration of the project. The Fall Protection and Prevention Plan shall be included in the Accident Prevention Plan (APP).

1.9 ACTIVITY HAZARD ANALYSIS (AHA)

The Activity Hazard Analysis (AHA) format shall be in accordance with USACE EM 385-1-1, and shall be written in both English and the host nation language. Submit the AHA for review at least 15 calendar days prior to the start of each phase. Format subsequent AHAs as amendments to the APP. The analysis should be used during daily inspections to ensure the implementation and effectiveness of the activity's safety and health controls.

The AHA list will be reviewed periodically (at least monthly) at the Contractor supervisory safety meeting and updated as necessary when procedures, scheduling, or hazards change.

The activity hazard analyses shall be developed using the project schedule as the basis for the activities performed. Any activities listed on the project schedule will require an AHA. The AHAs will be developed by the contractor, supplier or subcontractor and provided to the prime contractor for submittal to the Contracting Officer.

1.10 DISPLAY OF SAFETY INFORMATION

Within 1 calendar day after commencement of work, erect a safety bulletin board at the job site. The safety bulletin board shall include information and be maintained as required by EM 385-1-1, section 01.A.06.

1.11 SITE SAFETY REFERENCE MATERIALS

Maintain safety-related references applicable to the project. Maintain applicable equipment manufacturer's manuals.

1.12 EMERGENCY MEDICAL TREATMENT

Contractors will arrange for their own emergency medical treatment. The Government has no responsibility to provide emergency medical treatment. Military medical clinics may provide emergency treatment for serious injuries; the contractor is responsible for coordination with the local military medical clinic prior to mobilization.

1.13 REPORTS

1.13.1 Accident Reports

For recordable injuries and illnesses, and property damage accidents resulting in at least $2,000 in damages, the Prime Contractor shall conduct an accident investigation to establish the root cause(s) of the accident, complete the USACE Accident Report Form 3394 and provide the report to the Contracting Officer within 5 calendar day(s) of the accident. The Contracting Officer will provide copies of any required or special forms.

1.13.2 Accident Notification

Notify the Contracting Officer as soon as practical, but not later than four hours, after any accident meeting the definition of Recordable Injuries or Illnesses or High Visibility Accidents, property damage equal to or greater than $2,000. Information shall include contractor name; contract title; type of contract; name of activity, installation or location where accident occurred; date and time of accident; names of personnel injured; extent of property damage, if any; extent of injury, if known, and brief

description of accident (to include type of construction equipment used, PPE used, etc.). Preserve the conditions and evidence on the accident site until the Government investigation team arrives on-site and Government investigation is conducted.

1.13.3 Monthly Exposure Reports

Monthly exposure reporting to the Contracting Officer is required to be attached to the monthly billing request. This report is a compilation of employee-hours worked each month for all site workers, both prime and subcontractor. The Contracting Officer will provide copies of any special forms.

1.13.4 Crane Reports

Submit crane inspection reports required in accordance with USACE EM 385-1-1, Appendix H and as specified herein with Daily Reports of Inspections.

1.14 HOT WORK

Prior to performing "Hot Work" (welding, cutting, etc.) or operating other flame-producing/spark producing devices, a written permit shall be requested from the Installation. CONTRACTORS ARE REQUIRED TO MEET ALL CRITERIA BEFORE A PERMIT IS ISSUED. The Contractor will provide at least two (2) six kilogram ABC rated extinguishers for normal "Hot Work". All extinguishers shall be current inspection tagged, approved safety pin and tamper resistant seal. It is also mandatory to have a designated FIRE WATCH for any "Hot Work" done at this activity. The Fire Watch shall be trained in fire fighting techniques and remain on-site for a minimum of 120 minutes after completion of the task or as specified on the hot work permit.

When starting work in the facility, Contractors shall require their personnel to familiarize themselves with the location of the nearest fire alarm boxes and place in memory the emergency phone numbers. ANY FIRE, NO MATTER HOW SMALL, SHALL BE REPORTED TO THE RESPONSIBLE FIRE DIVISION/DEPARTMENT IMMEDIATELY.

PART 2 PRODUCTS

Not used.

PART 3 EXECUTION

3.1 CONSTRUCTION AND/OR OTHER WORK

Before initiation of work at the job site, an accident prevention plan, written by the Contractor for the specific work and hazards of the contract and implementing in detail the pertinent requirements of EM 385-1-1, will be reviewed and found acceptable by designated Government personnel. Specific requirements for development of the accident prevention plan are found in sections 01.A and Appendix A of EM 385-1-1.

Before beginning each activity involving a type of work presenting hazards not experienced in previous project operations or where a new work crew or subcontractor is to perform the work, activity hazard analysis (AHA) shall be prepared by the Contractor performing the work activity. See paragraph 01.A.09 of EM 385-1-1.

The Contractor shall require subcontractors to submit their plan of operations showing methods they propose to use in accomplishing major phases of work.

The Contractor shall be prepared to discuss the plans in conferences convened by the Contracting Officer prior to starting work on each major phase of operation. Plans shall include all pertinent information such as layout of haul roads, access roads, storage areas, electrical distribution lines, methods of providing minimum exposure to overhead loads, and methods of access to work areas. The plan for accomplishing the initial work phase shall be submitted within 15 calendar days after award of the contract. Plans for subsequent major phases of work shall be submitted not later than 15 calendar days prior to initiation of work on each major phase.

All areas where construction, demolition, alteration, building, or similarly related activities take place, all workers shall have the following minimum personal protective clothing and equipment:

1. Short sleeve shirt.
2. Long trousers.
3. Steel-toed safety boots.
4. Hard hat.

3.1.1 Falling Object Protection

All areas must be barricaded to safeguard employees. When working overhead, barricade the area below to prevent entry by unauthorized employees. Construction warning tape and signs shall be posted so they are clearly visible from all possible access points. When employees are working overhead all tools and equipment shall be secured so that they will not fall. When using guardrail as falling object protection, all openings shall be small enough to prevent passage of potential falling objects.

3.1.2 Hazardous Material Use

Each hazardous material must receive approval prior to being brought onto the job site or prior to any other use in connection with this contract. Allow a minimum of 10 working days for processing of the request for use of a hazardous material. Any work or storage involving hazardous chemicals or materials must be done in a manner that will not expose Government or Contractor employees to any unsafe or unhealthful conditions. Adequate protective measures must be taken to prevent Government or Contractor employees from being exposed to any hazardous condition that could result from the work or storage. The Prime Contractor shall keep a complete inventory of hazardous materials brought onto the work-site. Approval by the Contracting Officer of protective measures and storage area is required prior to the start of the work.

3.1.3 Hazardous Material Exclusions

Notwithstanding any other hazardous material used in this contract, radioactive materials or instruments capable of producing ionizing/non-ionizing radiation (with the exception of radioactive material and devices used in accordance with USACE EM 385-1-1 such as nuclear density meters for compaction testing and laboratory equipment with radioactive sources) as well as materials which contain asbestos, mercury or polychlorinated biphenyls, di-isocynates, lead-based paint are prohibited. The Contracting Officer, upon written request by the Contractor, may consider exceptions to the use of any of the above excluded materials.

3.1.4 Unforeseen Hazardous Material

The design should have identified materials such as PCB, lead paint, and friable and non-friable asbestos. If material, not indicated, that may be hazardous to human health upon disturbance during construction operations is encountered, stop that portion of work and notify the Contracting Officer immediately. Within 14 calendar days the Government will determine if the material is hazardous. If material is not hazardous or poses no danger, the Government will direct the Contractor to proceed without change. If material is hazardous and handling of the material is necessary to accomplish the

work, the Government will issue a modification pursuant to "FAR 52.243-4, Changes" and "FAR 52.236-2, Differing Site Conditions."

3.2 FALL HAZARD PROTECTION AND PREVENTION PROGRAM

The Contractor shall establish a fall protection and prevention program, for the protection of all employees exposed to fall hazards. The program shall include company policy, identify responsibilities, education and training requirements, fall hazard identification, prevention and control measures, inspection, storage, care and maintenance of fall protection equipment and rescue and evacuation procedures.

3.2.1 Training

The Contractor shall institute a fall protection training program. As part of the Fall Hazard Protection and Prevention Program, the Contractor shall provide training for each employee who might be exposed to fall hazards. A competent person for fall protection shall provide the training. Training requirements shall be in accordance with USACE EM 385-1-1, section 21.A.16.

3.2.2 Fall Protection Equipment and Systems

The Contractor shall enforce use of the fall protection equipment and systems designated for each specific work activity in the Fall Protection and Prevention Plan and/or AHA at all times when an employee is exposed to a fall hazard. Employees shall be protected from fall hazards as specified in EM 385-1-1, section 21. In addition to the required fall protection systems, safety skiff, personal floatation devices, life rings etc., are required when working above or next to water in accordance with USACE EM 385-1-1, paragraphs 05.H. and 05.I. Personal fall arrest systems are required when working from an articulating or extendible boom, swing stages, or suspended platform. In addition, personal fall arrest systems are required when operating other equipment such as scissor lifts if the work platform is capable of being positioned outside the wheelbase. The need for tying-off in such equipment is to prevent ejection of the employee from the equipment during raising, lowering, or travel. Fall protection must comply with USACE EM 385-1-1 and host nation requirements, whichever is more stringent.

3.2.2.1 Personal Fall Arrest Equipment

Personal fall arrest equipment, systems, subsystems, and components shall meet ANSI Z359.1 or European Union equivalent. Only a full-body harness with a shock-absorbing lanyard or self-retracting lanyard is an acceptable personal fall arrest body support device. Body belts may only be used as a positioning device system (for uses such as steel reinforcing assembly and in addition to an approved fall arrest system). Harnesses shall have a fall arrest attachment affixed to the body support (usually a Dorsal D-ring) and specifically designated for attachment to the rest of the system. Only locking snap hooks and carabiners shall be used. Webbing, straps, and ropes shall be made of synthetic fiber. The maximum free fall distance when using fall arrest equipment shall not exceed 1.8 m (6 feet). The total fall distance and any swinging of the worker (pendulum-like motion) that can occur during a fall shall always be taken into consideration when attaching a person to a fall arrest system.

3.2.3 Fall Protection for Roofing Work

Fall protection controls shall be implemented based on the type of roof being constructed and work being performed. The roof area to be accessed shall be evaluated for its structural integrity including weight-bearing capabilities for the projected loading.

a. Low Sloped Roofs:

(1) For work within 1.8 m (6 feet) of an edge, on low-slope roofs, personnel shall be protected from falling by use of personal fall arrest systems, guardrails, or safety nets. A safety monitoring system is not adequate fall protection and is not authorized.

(2) For work greater than 1.8 m (6 feet) from an edge, warning lines shall be erected and installed in accordance with USACE EM 385-1-1.

b. Steep-Sloped Roofs: Work on steep-sloped roofs requires a personal fall arrest system, guardrails with toe-boards, or safety nets. This requirement also includes residential or housing type construction.

3.2.4 Existing Anchorage

Existing anchorages, to be used for attachment of personal fall arrest equipment, shall be certified (or re-certified) by a qualified person for fall protection in accordance with ANSI Z359.1 or European Union equivalent. Exiting horizontal lifeline anchorages shall be certified (or re-certified) by a registered professional engineer with experience in designing horizontal lifeline systems.

3.2.5 Horizontal Lifelines

Horizontal lifelines shall be designed, installed, certified and used under the supervision of a qualified person for fall protection as part of a complete fall arrest system which maintains a safety factor of 2.

3.2.6 Guardrails and Safety Nets

Guardrails and safety nets shall be designed, installed and used in accordance with EM 385-1-1 or Host Nation requirements, whichever is more stringent.

3.2.7 Rescue and Evacuation Procedures

When personal fall arrest systems are used, the contractor must ensure that the mishap victim can self-rescue or can be rescued promptly should a fall occur. A Rescue and Evacuation Plan shall be prepared by the contractor and include a detailed discussion of the following: methods of rescue; methods of self-rescue; equipment used; training requirement; specialized training for the rescuers; procedures for requesting rescue and medical assistance; and transportation routes to a medical facility. The Rescue and Evacuation Plan shall be included in the Activity Hazard Analysis (AHA) for the phase of work, in the Fall Protection and Prevention (FP&P) Plan, and the Accident Prevention Plan (APP).

3.3 SCAFFOLDING

Employees shall be provided with a safe means of access to the work area on the scaffold. Climbing of any scaffold braces or supports not specifically designed for access is prohibited. Access to scaffold platforms greater than 6 m in height shall be accessed by use of a scaffold stair system. Vertical ladders commonly provided by scaffold system manufacturers shall not be used for accessing scaffold platforms greater than 6 m in height. The use of an adequate gate is required. Contractor shall ensure that employees are qualified to perform scaffold erection and dismantling. Do not use scaffold without the capability of supporting at least four times the maximum intended load or without appropriate fall protection as delineated in the accepted fall protection and prevention plan. Stationary scaffolds must be attached to structural building components to safeguard against tipping forward or backward. Special care shall be given to ensure scaffold systems are not overloaded. Side brackets used to extend scaffold platforms on self-supported scaffold systems for the storage of material is prohibited. The first tie-in shall be at the height equal to 4 times the width of the smallest dimension of the scaffold base. Work platforms shall be placed on mud sills. Scaffold or work

platform erectors shall have fall protection during the erection and dismantling of scaffolding or work platforms that are more than six feet. Delineate fall protection requirements when working above six feet or above dangerous operations in the Fall Protection and Prevention (FP&P) Plan and Activity Hazard Analysis (AHA) for the phase of work.

3.4 EQUIPMENT

3.4.1 Material Handling Equipment

a. Material handling equipment such as forklifts shall not be modified with work platform attachments for supporting employees unless specifically delineated in the manufacturer's printed operating instructions.

b. The use of hooks on equipment for lifting of material must be in accordance with manufacturer's printed instructions.

c. Operators of forklifts or power industrial trucks shall be trained/licensed in accordance with Host Nation requirements.

3.4.2 Weight Handling Equipment

a. Cranes and derricks shall be equipped as specified in EM-385-1-1 section 16.

b. The Contractor shall notify the Contracting Officer 15 days in advance of any cranes entering the activity so that necessary quality assurance spot checks can be coordinated. Contractor's operator shall remain with the crane during the spot check.

c. The Contractor shall comply with the crane manufacturer's specifications and limitations for erection and operation of cranes and hoists used in support of the work. Erection shall be performed under the supervision of a designated person. All testing shall be performed in accordance with the manufacturer's recommended procedures.

d. Under no circumstance shall a Contractor make a lift at or above 90% of the cranes rated capacity in any configuration.

e. When operating in the vicinity of overhead transmission lines, operators and riggers shall be alert to this special hazard and shall follow the requirements of USACE EM 385-1-1 section 11.

f. Crane suspended personnel work platforms (baskets) shall not be used unless the Contractor proves to the satisfaction of the Contracting Officer that using any other access to the work location would provide a greater hazard to the workers or is impossible. Personnel shall not be lifted with a line hoist or friction crane.

g. Portable fire extinguishers shall be inspected, maintained, and recharged.

h. All employees shall be kept clear of loads about to be lifted and of suspended loads.

i. The Contractor shall use cribbing when performing lifts on outriggers.

j. The crane hook/block must be positioned directly over the load. Side loading of the crane is prohibited.

k. A physical barricade must be positioned to prevent personnel from entering the counterweight swing (tail swing) area of the crane.

l. Certification records which include the date of inspection, signature of the person performing the inspection, and the serial number or other identifier of the crane that was inspected shall always be available for review by Contracting Officer personnel.

m. Written reports listing the load test procedures used along with any repairs or alterations performed on the crane shall be available for review by Contracting Officer personnel.

n. Certify that all crane operators have been trained in proper use of all safety devices (e.g. anti-two block devices).

o. Take steps to ensure that wind speed does not contribute to loss of control of the load during lifting operations. Prior to conducting lifting operations the contractor shall set a maximum wind speed at which a crane can be safely operated based on the equipment being used, the load being lifted, experience of operators and riggers, and hazards on the work site. This maximum wind speed determination shall be included as part of the activity hazard analysis plan for that operation.

3.5 EXCAVATIONS

The competent person for excavations performed as a result of contract work shall be on-site when excavation work is being performed, and shall inspect, and document the excavations daily prior to entry by workers. The competent person must evaluate all hazards, including atmospheric, that may be associated with the work, and shall have the resources necessary to correct hazards promptly.

3.5.1 Utility Locations

Prior to any excavation, all underground utilities in the work area must be positively identified by the contractor utilizing a) a private utility locating service in addition to any station locating service, and/or b) a metal and/or cable-detecting device along the route of the excavation. All underground utilities discovered will be flagged a distance of one-half (1/2) meter on each side of the location, and any markings made during the utility investigation must be maintained throughout the contract.

Damage occurring to existing utilities, when the above procedures are not followed, will be repaired at the Contractor's expense.

3.5.2 Utility Location Verification

The Contractor must physically verify underground utility locations by hand digging using wood or fiberglass handled tools when any adjacent construction work is expected to come within three feet of the underground system. Digging within 0.61 m (2 feet) of a known utility must not be performed by means of mechanical equipment; hand digging shall be used. If construction is parallel to an existing utility the utility shall be exposed by hand digging every 30.5 m (100 feet) if parallel within 1.5 m (5 feet) of the excavation.

3.5.3 Shoring Systems

Trench and shoring systems must be identified in the accepted safety plan and AHA. Manufacture tabulated data and specifications or registered engineer tabulated data for shoring or benching systems shall be readily available on-site for review. Job-made shoring or shielding shall have the registered professional engineer stamp, specifications, and tabulated data. Extreme care must be used when excavating near direct burial electric underground cables.

3.5.4 Trenching Machinery

Trenching machines with digging chain drives shall be operated only when the spotters/laborers are in plain view of the operator. Operator and spotters/laborers shall be provided training on the hazards of the digging chain drives with emphasis on the distance that needs to be maintained when the digging chain is operating. Documentation of the training shall be kept on file at the project site.

3.6 UTILITIES WITHIN CONCRETE SLABS

Utilities located within concrete slabs or pier structures, bridges, and the like, are extremely difficult to identify due to the reinforcing steel used in the construction of these structures. Whenever contract work involves concrete chipping, saw cutting, or core drilling, the existing utility location must be coordinated with station utility departments in addition to a private locating service. Outages to isolate utility systems shall be used in circumstances where utilities are unable to be positively identified. The use of historical drawings does not alleviate the contractor from meeting this requirement.

3.7 ELECTRICAL

3.7.1 Conduct of Electrical Work

Underground electrical spaces must be certified safe for entry before entering to conduct work. Cables that will be cut must be positively identified and de-energized prior to performing each cut. Positive cable identification must be made prior to submitting any outage request for electrical systems. Arrangements are to be coordinated with the Contracting Officer and Station Utilities for identification. The Contracting Officer will not accept an outage request until the Contractor satisfactorily documents that the circuits have been clearly identified. Perform all high voltage cable cutting remotely using hydraulic cutting tool. When racking in or live switching of circuit breakers, no additional person other than the switch operator will be allowed in the space during the actual operation. Plan so that work near energized parts is minimized to the fullest extent possible. Use of electrical outages clear of any energized electrical sources is the preferred method. When working in energized substations, only qualified electrical workers shall be permitted to enter. When work requires Contractor to work near energized circuits as defined by the NFPA 70, high voltage personnel must use personal protective equipment that includes, as a minimum, electrical hard hat, safety shoes, insulating gloves with leather protective sleeves, fire retarding shirts, coveralls, face shields, and safety glasses. In addition, provide electrical arc flash protection for personnel as required by NFPA 70E. Insulating blankets, hearing protection, and switching suits may also be required, depending on the specific job and as delineated in the Contractor's AHA.

3.7.2 Portable Extension Cords

Portable extension cords shall be sized in accordance with manufacturer ratings for the tool to be powered and protected from damage. All damaged extension cords shall be immediately removed from service. Portable extension cords shall meet the requirements of NFPA 70 or European Union equivalent.

3.8 WORK IN CONFINED SPACES

The Contractor shall comply with the requirements in Section 06.I of USACE EM 385-1-1. Any potential for a hazard in the confined space requires a permit system to be used.

a. Entry Procedures. Prohibit entry into a confined space by personnel for any purpose, including hot work, until the qualified person has conducted appropriate tests to ensure the confined or enclosed space is safe for the work intended and that all potential hazards are controlled or eliminated and documented. (See Section 06.I.06 of USACE EM 385-1-1 for entry procedures). All hazards pertaining to the space shall be reviewed with each employee during review of the AHA.

b. Forced air ventilation is required for all confined space entry operations and the minimum air exchange requirements must be maintained to ensure exposure to any hazardous atmosphere is kept below its' action level.

c. Ensure the use of rescue and retrieval devices in confined spaces greater than 1.5 m (5 feet) in depth. Conform to Sections 06.I.08, 06.I.09 and 06.I.10 of USACE EM 385-1-1.

d. Sewer wet wells require continuous atmosphere monitoring with audible alarm for toxic gas detection.

e. Include training information for employees who will be involved as entrants and attendants for the work. Conform to Section 06.I.07 of USACE EM 385-1-1.

f. Daily Entry Permit. Post the permit in a conspicuous place close to the confined space entrance.

3.9 CRYSTALLINE SILICA

Grinding, abrasive blasting, and foundry operations of construction materials containing crystalline silica, shall comply with USACE EM 385-1-1, Appendix C. The Contractor shall develop and implement effective exposure control and elimination procedures to include dust control systems, engineering controls, and establishment of work area boundaries, as well as medical surveillance, training, air monitoring, and personal protective equipment.

3.10 DEMOLITION

3.101.1 Demolition Plan

The Contractor shall submit a written demolition plan for all demolition work to be carried on the site. In addition, the demolition plan shall be signed by a Professional Registered Engineer and meet the requirements of the Corps of Engineers Safety and Health Manual, EM 385-1-1, section 23. The demolition plan shall be submitted to the COR at least 1 week before the beginning of the work, including structural calculations for the demolition, if necessary. The demolition work shall not begin before the Contractor has received a written approval from the COR.

3.12.1 Protection of Personnel

During the demolition work the Contractor shall continuously evaluate the condition of the structure being demolished and take immediate action to protect all personnel working in and around the demolition site. No area, section, or component of floors, roofs, walls, columns, pilasters, or other structural element will be allowed to be left standing without sufficient bracing, shoring, or lateral support to prevent collapse or failure while workers remove debris or perform other work in the immediate area.

3.10.1 Protection of Structures

Floors, roofs, walls, columns, pilasters, and other structural components that are designed and constructed to stand without lateral support or shoring, and are determined to be in stable condition, shall remain standing without additional bracing, shoring, or lateral support until demolished, unless directed otherwise by the COR. The Contractor shall ensure that no elements determined to be unstable are left unsupported and shall be responsible for placing and securing bracing, shoring, or lateral supports as may be required as a result of any cutting, removal, or demolition work performed under this contract.

Interior concrete or masonry walls shall be demolished from the top down unless a Registered Engineer can demonstrate that an alternate method poses no additional safety hazards

3.11 HOUSEKEEPING

3.11.1 Clean-Up

The Contractor shall be responsible for cleaning up. The Contractor shall require his personnel to keep the immediate work site clean of all dirt and debris resulting from work under this contract. Accumulated dirt and debris shall be hauled off and disposed of in accordance with local law and at least once a week by the Contractor. Additionally, all debris in work areas shall be cleaned up daily or more frequently if necessary. Construction debris may be temporarily located in an approved location, however garbage accumulation must be removed each day.

Stairwells used by the Contractor during execution of work shall be cleaned daily. Cloths, mops, and brushes containing combustible materials shall be disposed of or stored outside of the buildings in tight covered metal containers. Paints and thinners shall not be poured into inlets of the interior or exterior sewage system. Paint, stains, and other residues on adjacent surfaces or fixtures caused by the Contractor shall be carefully removed and cleaned to original finish. Upon completion of the work, the Contractor shall remove all construction equipment, materials and debris resulting from the work. The entire work site and the area used by Contractor personnel shall be left clean.

ATTACHMENT

STR 01525O – SAFETY AND OCCUPATIONAL HEALTH PHASING PLAN

- End of Section -

A. PURPOSE AND RESPONSIBILITIES:

1. The purpose of this SOH Phasing Plan is to establish controls and procedures to reduce the safety and occupational health risks on associated projects to an acceptable level. This SOH Phasing Plan is not intended to address all program SOH requirements, but provides general emphasis to certain procedures and requirements addressed in: EM 385-1-1, U.S. Army Corps of Engineers Safety and Health Requirements Manual

2. For contractor safety on projects associated with this program, compliance with EM 385-1-1 safety requirements will be the long-term goal reached by growing a safety culture. This compliance will, by necessity, be achieved through a phased-in process. In the Commander's letter at the preface of the EM 385-1-1, he acknowledges that in OCONUS locations, strict compliance with the manual may not be possible – and through the hazard analysis process, safety measures can be developed to attain the same degree of safety.

a. The exact timeline and methods of compliance, based generally on the Phase plan below will be determined by in-theater Project Delivery Team (PDT) partners responsible for safety, to include USACE Field Engineering/Construction/ Safety personnel, Prime Contractors and Local Subcontractors. The Prime Contractor, in partnership with the USACE and subcontractors, will develop a Safety and occupational Health Plan (SOHP) consisting of a specific Accident Prevention Plan (APP) and Activity Hazard Analysis for each project.

b. Each project SOHP will evolve as a living document, starting by dividing into phases to provide a goal with a timeline. Focus for the project safety program areas will be based on the following time-based phases.

Phase I: "Saving Lives". Establish achievable compliance methods and basic worker safety education to eliminate or reduce to an acceptable level the life-threatening conditions associated with high hazard construction activities.

- The initial high-hazard focus areas shall include:
  - Excavations
  - Fall Hazards
  - Electrical Work
  - Mobile Construction Equipment
  - Machinery
  - Confined Spaces
- Develop a basic worker safety and health practices manual/ guide and associated mandatory training for each Focus area listed above. These will be in English and local language, based on local conditions and practices and targeted at high-hazard activities.
- On all contract sites, the basic life-support will include First Aid Kits, and emergency communication.
- Contractor Accident Prevention Plans, Activity Hazard Analyses, and other safety-related systems under development with assistance by PDT

Phase II: "Building A Safety Culture" (Approximately one year, beginning at end of Phase I) Advanced safety education of local contractors and LN work force. Full contractor compliance with
USACE safety standards related to high-hazard situations, increased application of standards on all work.

- Workforce education and training to include all applicable requirements of EM 385-1-1 and International Safety Standards
- All required Personal Protective Equipment (PPE) available and used by workers in applicable work practices, as outlined in the EM 385-1-1.

- Contractor Accident Prevention Plans, Activity Hazard Analyses, and other safety-related systems refined to meet standard USACE expectations with assistance by PDT
- Standard Contractor Safety administrative responsibilities required, i.e.: Accident reporting, man-hour tracking, training documentation, First Aid personnel certification, fire protection, etc.

Phase III, "Full Performance" (beginning at end of Phase II) Full performance in compliance with EM 385-1-1 and other applicable laws, regulations, design codes and standards.
Where standard compliance is not possible, local methods may be used in accordance with implementing letter of EM 385-1-1 or through formal waiver process.

3. The PDT shall employ the "Plan, Do, Check, Act" process for implementing this SOHP as a living document. Each PDT member is responsible for planning for safety and health management within their area of responsibility, implementing agreed-on mitigation, checking to assure that the SOHP is being implemented and acting to adjust plans and implementation with a goal of continuous improvement. This plan will be reviewed and revised as needed at the initiation of each Phase listed above.

4. The PDT members shall cooperate in developing a listing of potential hazards associated with each project.

B. GOALS AND OBJECTIVES:

1. Goals. The safety and health goals of all projects are:
   a. Be accident free
   b. Detect and address safety and health problems early in the life of each project
   c. Do not accept unnecessary risk
   d. Every team member, to include contractors shall contribute to the safety and health of their fellow team members and assure that the product is free of inherent hazards to the user.
   e. Educate the workforce and promote Safety as a new way of doing business, show how the project and the employee benefit from Safety.

2. Objectives. The safety and health objectives of this program are:
   a. Managers, supervisors, and workers shall be held accountable, based on the current Phase, for safety and health.
   b. Safety and health expectations shall be communicated with the work force in their native language through the use of banners, flyers, and periodic safety meetings
   c. The work force shall have the safety and health training needed to perform the work at hand, based on the Phase.
   d. Injury and property damage shall be avoided through early detection and management of hazards

Phase I Interim Safety and Occupational Health Work Practices for USACE Contractor Projects

Phase I Safety Program

1. Contractors shall strive to maintain full compliance with the USACE Safety Requirements Manual, EM 385-1-1. This may not be easily achieved during this Phase, due to a number of factors. The focus for safety and health efforts during this Phase is Saving Lives – the prevention of deaths, permanently disabling injuries, and major property loss. The goal during this period is to provide the equipment and methods needed to save lives and to train the workforce in working safely and using the correct personal Protective Equipment (PPE).

2. In order to assist in achieving this goal immediately, the following interim standards shall be used (as a minimum acceptable standard) when full compliance with the EM 385-1-1 is not possible. Contractors shall provide these standards in to their workforce in the local language and shall provide training as needed to ensure worker awareness.

Basic Safety and Health Standards for Construction

A. USACE and the contractors must form a team to assure safety on every job site and prevent serious accidents. All unsafe conditions must be reported and the hazard reduced before work may proceed.

B. Personal Protective Equipment (PPE) may not always be available to every worker during this Phase. Where the equipment required by the USACE Safety Manual, EM 385-1-1, cannot be provided in a timely manner, the contractor shall develop methods that will provide a similar degree of safety (as accepted by USACE) and not expose the workers to serious risk. The mandatory minimum standards for all PPE are:

- Footwear: Closed-toe durable shoes or boots shall be worn by all workers on the project site. No sandals or sports shoes will be allowed, at no time will workers be allowed on the project site with bare feet. Safety footwear (steel-toe or other protection) should be worn by workers using steel rollers, tampers, jack hammers or carrying heavy objects (metal, concrete, stone)
- Head Protection: When they are available, hard hats should be worn by all construction workers when they are at the project. Hard Hats must be worn in overhead hazard areas including material hoisting/ lifting operations, areas below scaffolds and other elevated work, in excavations, and low ceiling areas that have sharp or hazardous projections. If they are not available, then workers must be kept away from these and other overhead hazard areas.
- Respirators: Workers exposed to toxic chemicals, vapors, gases and dusts must wear proper respiratory protection. Such exposure is expected in asbestos removal/ repair work, working with paints and solvents in rooms or enclosed spaces, and fuel production facilities. The employer must train the workers in the uses of the respirator and how to properly wear it. The minimum acceptable respirator is a negative pressure filter or cartridge half-face respirator that is correctly equipped for the hazard. Contractors shall consult and follow the ACGIH guidance for length of allowable exposure to the contaminant and workers shall not exceed the recommended time for exposure. Dust Masks will be worn when the work is producing visible dust.
- Eye Protection: Workers shall wear protective glasses, goggles, or visors when exposed to eye hazards. These hazards include concrete dust, stone and concrete chips from hammering, sandblasting, and power tool cutting or milling. Workers performing welding and cutting with torches or arc-welding equipment shall wear the proper shaded lenses in face shields and/ or goggles.
- Hearing Protection: Protective ear plugs shall be worn when workers are exposed to potentially damaging noise including jack hammers, flight line operations, power saws and grinders, and combustion engines without mufflers.
- Gloves: All workers shall have protective gloves appropriate to the task.
- Clothing: Workers shall wear clothing that protects their skin from damage – shirts and long pants at a minimum. Workers exposed to welding operations, chemicals, abrasive blasting, wet concrete, asbestos, and other hazardous contaminants will wear appropriate clothing for the hazard. Workers using power tools or operating equipment shall not wear very loose or flowing clothing that may get caught in the equipment.

C. Work Methods for Highly Hazardous Work: The following types of work and hazards are recognized as the leading cause of serious injuries and deaths in construction work. Each type of work has specific PPE and safety equipment that is required to do the work and also specific

procedures that must be followed every time the work is done. These interim measures are the minimum acceptable precautions. For each project, an Activity Hazard Analysis (AHA) shall be completed and, when possible, compliance with more restrictive methods of the EM 385-1-1 shall be achieved.

Workers shall be trained on the following safety precautions, the nature of the hazards involved, and any additional work methods used before performing each type of work

- Excavations
  - The Site Safety and Health Officer will be contacted for inspection of the work prior to digging. The SSHO will assist in any safety equipment or techniques that are required to avoid injury. They will also provide a safety check on the location to assure the there are no underground hazards at the site.
  - All excavations or unsafe areas will be marked with barricades or warning tape. These warnings must be maintained and visible until the area is restored to a safe condition.
  - When workers will enter trenches, the walls shall be sloped according to the type of soil or shoring, trench boxes, or other structures will be used to protect workers from collapsing walls
  - Soil removed from trenches will not be placed at the edge of the trench – it must be placed back at least 1 meter from the edge.
  - Vehicles and construction equipment must not be parked closer than 2 meters from the edge of an excavation.
  - Excavation walls shall be inspected regularly during each day to check for cracks, bulges, large stones, sandy areas, and failure of the wall. If these conditions are found, nobody may enter the excavation and the damaged area must be dug out or braced.

- Fall Hazards
  - When working above 2 meters from the ground or another level, all workers shall be protected from falling. The SSHO will inspect prior to beginning work to be sure the work methods are safe. Inspection will include work on ladders, scaffolds, and other elevated work areas.
  - Protection systems shall be sturdy railings, walls, or other structures
  - If there are no structures to protect workers, body belts or harnesses shall be used along with lanyards.
  - Body belts should be mainly be used only to prevent a worker from falling over an edge or off a structure.
  - Body belts and harnesses can both be used as fall protection (stopping a falling worker). The lanyard shall be rope strong enough to withstand the shock of stopping the worker's weight, and they shall be as short as possible, to limit the shock force. Lanyards shall never allow a worker to fall more than 2 meters. It is recommended that lanyards without shock absorber devices be no longer than 1 meter.

- Electrical Work
  - All circuits, wires, and electrical devices shall be tested with a volt meter and found to be de-energized before workers touch the energized parts
  - Controls, switches, and other means for energizing the circuit or equipment shall be tagged "do not operate"
  - Workers shall not work closer to energized systems than the distances listed in the USACE manual.

- Temporary electrical systems shall be grounded and tested for good ground resistance before use.
- Power tools shall be protected from water and damage, and their cords must be insulated. Cords must be factory installed or equivalent replacements, including safety grip plug and cord boot.
- Extension cords will be in safe, good working order.

- Mobile Construction Equipment
  - If equipment, particularly cranes, are damaged the repairs shall be done by a competent repair person and verified by the SSHO prior to being brought back into service.
  - Nobody may ride outside the cab of construction equipment. Specifically, no riders may ever be in loader buckets, bulldozer blades, on forklift forks, or suspended by a crane.
  - When workers are nearby, construction equipment must have reverse signal alarms or shall use a spotter standing away from the equipment. The spotter must be visible by the driver and positioned to see the area behind the equipment.
  - Construction equipment must work a safe distance from electrical systems, based on the voltage.
  - Cranes must be used according to the manufacturer. If no manufacturer data is available, a load chart shall be developed by a qualified engineer.
  - Workers should stay out of the radius of the crane boom during a lift.
  - Lifting ropes shall be inspected daily for breaks and failure of hardware and fittings.
  - Nobody shall ever ride the hook or load of a crane.

- Machinery
  - Rotating shafts, wheels, blades, and other hazardous parts shall have guards to prevent workers from being injured.
  - Fuel-powered machinery must not be operated indoors or near enclosed areas without using powered ventilation to prevent toxic CO build-up.
  - Metal housings of electrically powered equipment must be grounded

- Confined Spaces
  - The SSHO will pre-approve any work in a confined space, such as in a tank, sewer, manhole or any other enclosed area. The SSHO will inspect the work and assist with any safety equipment or techniques that are required.
  - All permit-required confined spaces (PRCS) on a project shall have signs prohibiting entry.
  - Entrants, supervisors, and attendants for PRCS shall be properly trained.
  - When available, oxygen/flammable/toxic gas meters shall be used for all PRCS. This equipment must be used to evaluate the air in all spaces known or suspected to have contained flammable or toxic chemicals or contain sewage, rotting vegetation or other organic matter.
  - For spaces not meeting the above criteria, mechanical ventilation fans shall be used to clear the air in the space when meters are not available. Based on the air flow of the fan, it shall exhaust the total volume of the space a minimum of seven times prior to entry.
  - All entrants shall wear a harness, body belt, or other device attached to a rope sufficient to retrieve the worker in an emergency.
  - Permits should be used during PRCS entry. If not possible, then some visible means, such as flags or tags outside the entrance, shall be used so supervisors can see when workers are in the space.

- Gas Cylinders

- Pressurized gas cylinders, such as Oxygen and Acetylene tanks will be stored in a holding stand/ cart to prevent them from falling over. Cylinders will not be placed free on the ground or standing free. If the bottle is not in use the valve will be removed.

D. Child Labor. Minors under the age of 18 may not perform any of the above hazardous work. Additionally, these minors can not perform any hazardous work such as operating dangerous power tools (circular saws, jack hammers, lathes, etc), driving vehicles, be exterior assistants for vehicle operators or operating mobile construction equipment, explosives work, work at heights over 2 meters without standard railings, electrical work, entering excavations, and work with toxic substances.

-- End of Section --

SPECIFICATION SECTION 01770

CLOSEOUT PROCEDURES FOR SOUTH PARK IMPROVEMENTS

PART 1: GENERAL

1.1 SUBMITTALS

Government approval is required for submittals with a "G" designation; submittals not having a "G" designation are for information only. When used, a designation following the "G" designation identifies the office that will review the submittal for the Government. The following shall be submitted in accordance with Section 01335 SUBMITTAL PROCEDURES:

SD-10 Operation and Maintenance Data
Equipment/Product Warranty List; G
Submit Data Package 1 in accordance with Section 01781 OPERATION AND MAINTENANCE DATA.

SD-11 Closeout Submittals
As-Built Drawings; G
Record Of Materials; G
Equipment/Product Warranty Tag; G

1.2 PROJECT RECORD DOCUMENTS

1.2.1 As-Built Drawings

As built drawings shall be submitted in accordance with Section 01780A CLOSEOUT SUBMITTALS

1.2.2 As-Built Record of Materials

Furnish a record of materials.

Where several manufacturers' brands, types, or classes of the item listed have been used in the project, designate specific areas where each item was used. Designations shall be keyed to the areas and spaces depicted on the contract drawing. Furnish the record of materials used in the following format:

MATERIALS DESIGNATION	SPECIFICATION	MANUFACTURER	MATERIALS USED (MANUFACTURER'S DESIGNATION)	WHERE USED

1.3 EQUIPMENT/PRODUCT WARRANTIES

1.3.1 Equipment/Product Warranty List

The Contractor shall develop a warranty management plan which shall contain information relevant to the clause Warranty of Construction. At least 30 days before the planned pre-warranty conference, the Contractor shall submit the warranty management plan for Government approval. The warranty management plan shall include all required actions and documents to assure that the Government

receives all warranties to which it is entitled. The plan shall be in narrative form and contain sufficient detail to render it suitable for use by future maintenance and repair personnel, whether tradesmen, or of engineering background, not necessarily familiar with this contract. The term "status" as indicated below shall include due date and whether item has been submitted or was accomplished. Warranty information made available during the construction phase shall be submitted to the Contracting Officer for approval prior to each monthly pay estimate. Approved information shall be assembled in a binder and shall be turned over to the Government upon acceptance of the work. The construction warranty period shall begin on the date of project acceptance and shall continue for the full product warranty period. A joint 4 month and 9 month warranty inspection shall be conducted, measured from time of acceptance, by the Contractor, Contracting Officer and the Customer Representative. Information contained in the warranty management plan shall include, but shall not be limited to, the following:

a. Roles and responsibilities of all personnel associated with the warranty process, including points of contact and telephone numbers within the organizations of the Contractors, subcontractors, manufacturers or suppliers involved.

b. Listing and status of delivery of all Certificates of Warranty for extended warranty items, to include roofs, HVAC balancing, pumps, motors, transformers, and for all commissioned systems such as fire protection and alarm systems, sprinkler systems, lightning protection systems, etc.

c. A list for each warranted equipment, item, feature of construction or system indicating:

1. Name of item.
2. Model and serial numbers.
3. Location where installed.
4. Name and phone numbers of manufacturers or suppliers.
5. Names, addresses and telephone numbers of sources of spare parts.
6. Warranties and terms of warranty. This shall include one-year overall warranty of construction. Items which have extended warranties shall be indicated with separate warranty expiration dates.
7. Cross-reference to warranty certificates as applicable.
8. Starting point and duration of warranty period.
9. Summary of maintenance procedures required to continue the warranty in force.
10. Cross-reference to specific pertinent Operation and Maintenance manuals.
11. Organization, names and phone numbers of persons to call for warranty service.
12. Typical response time and repair time expected for various warranted equipment.

d. The Contractor's plans for attendance at the 4 and 9 month post-construction warranty inspections conducted by the Government.

e. Procedure and status of tagging of all equipment covered by extended warranties.

f. Copies of instructions to be posted near selected pieces of equipment where operation is critical for warranty and/or safety reasons.

1.3.2 Performance of Warranty Work

In the event the Contractor fails to commence and diligently pursue any construction warranty work required, the Contracting Officer will have the work performed by others, and after completion of the work, will charge the remaining construction warranty funds of expenses incurred by the Government while performing the work, including, but not limited to administrative expenses.

Following oral or written notification of required construction warranty repair work, the Contractor shall respond in a timely manner. Written verification will follow oral instructions. Failure of the Contractor to respond will be cause for the Contracting Officer to proceed against the Contractor.

1.3.3 Pre-Warranty Conference

Prior to contract completion, and at a time designated by the Contracting Officer, the Contractor shall meet with the Contracting Officer to develop a mutual understanding with respect to the requirements of this section. Communication procedures for Contractor notification of construction warranty defects, priorities with respect to the type of defect, reasonable time required for Contractor response, and other details deemed necessary by the Contracting Officer for the execution of the construction warranty shall be established/reviewed at this meeting. In connection with these requirements and at the time of the Contractor's quality control completion inspection, the Contractor shall furnish the name, telephone number and address of a licensed and bonded company which is authorized to initiate and pursue construction warranty work action on behalf of the Contractor. This point of contact will be located within the local service area of the warranted construction, shall be continuously available, and shall be responsive to Government inquiry on warranty work action and status. This requirement does not relieve the Contractor of any of its responsibilities in connection with other portions of this provision.

1.3.4 Warranty Tags

At the time of installation, each warranted item shall be tagged with a durable, oil and water resistant tag approved by the Contracting Officer. Each tag shall be attached with a copper wire and shall be sprayed with a silicone waterproof coating. The date of acceptance and the QC signature shall remain blank until project is accepted for beneficial occupancy. The tag shall show the following information.

a. Type of product/material _____
b. Model number _____
c. Serial number_____
d. Contract number _____
e. Warranty period _____ from _____ to _____
f. Inspector's signature _____
g. Construction Contractor_____
Address _____
Telephone number_____
h. Warranty contact _____
Address _____
Telephone number_____
i. Warranty response time priority code _____
j. WARNING - PROJECT PERSONNEL TO PERFORM ONLY OPERATIONAL MAINTENANCE DURING THE WARRANTY PERIOD.

1.4 MECHANICAL TESTING AND BALANCING

All contract requirements for testing/adjusting/balancing shall be fully completed, including all testing, prior to contract completion date. The time required to complete all testing/adjusting/balancing is included in the allotted calendar days for completion.

1.5 FINAL CLEANING

The premises shall be left broom clean. Stains, foreign substances, and temporary labels shall be removed from surfaces. Carpet and soft surfaces shall be vacuumed. Equipment and fixtures shall be cleaned to a sanitary condition. Filters of operating equipment shall be replaced. Debris shall be removed from roofs, drainage systems, gutters, and downspouts. Paved areas shall be swept and landscaped areas shall be raked clean. The site shall have waste, surplus materials, and rubbish removed. The project area shall have temporary structures, barricades, project signs, and construction facilities removed. A list of completed clean-up items shall be submitted on the day of final inspection.

PART 2 PRODUCTS

Not used.

PART 3 EXECUTION

Not used.

-- End of Section --

SECTION 01780A

CLOSEOUT SUBMITTALS FOR SOUTHPARK IMPROVEMENTS

PART 1 GENERAL

1.1 SUBMITTALS

Government approval is required for submittals with a "G" designation; submittals not having a "G" designation are for Contractor Quality Control approval. When used, a designation following the "G" designation identifies the office that will review the submittal for the Government. The following shall be submitted in accordance with Section 01335 SUBMITTAL PROCEDURES:

SD-02 Shop Drawings

As-Built Drawings

Drawings showing final as-built conditions of the project. The local language of Afghanistan shall be added to project As-Built drawings. The final CADD as-built drawings shall consist of **2 set[s]** of electronic CADD drawing files in the specified format, and **2 half-size and two full-size paper copies** of the approved as-built drawings.

SD-03 Product Data

As-Built Record of Equipment and Materials

Two copies of the record listing the as-built materials and equipment incorporated into the construction of the project.

Warranty Management Plan

One set of the warranty management plan containing information relevant to the warranty of materials and equipment incorporated into the construction project, including the starting date of warranty of construction. The Contractor shall furnish with each warranty the name, address, and telephone number of each of the guarantor's representatives nearest to the project location.

Warranty Tags

Two record copies of the warranty tags showing the layout and design.

Final Cleaning

Two copies of the listing of completed final clean-up items.

1.2 PROJECT RECORD DOCUMENTS

1.2.1 As-Built Drawings

This paragraph covers as-built drawings complete, as a requirement of the contract. The terms "drawings," "contract drawings," "drawing files," "working as-built drawings" and "final as-built drawings" refer to contract drawings which are revised to be used for final as-built drawings.

1.2.1.1 Government Furnished Materials

One set of electronic CADD files in the specified software and format revised to reflect all bid amendments will be provided by the Government at the preconstruction conference for projects requiring CADD file as-built drawings.

1.2.1.2 Working As-Built and Final As-Built Drawings

a. The Contractor shall revise 2 sets of paper drawings by red-line process to show the as-built conditions during the prosecution of the project. These working as-built marked drawings shall be kept current on a weekly basis and at least one set shall be available on the jobsite at all times. Changes from the contract plans which are made in the work or additional information which might be uncovered in the course of construction shall be accurately and neatly recorded as they occur by means of details and notes. Final as-built drawings shall be prepared after the completion of each definable feature of work as listed in the Contractor Quality Control Plan (Foundations, Utilities, Structural Steel, etc., as appropriate for the project). The working as-built marked prints and final as-built drawings will be jointly reviewed for accuracy and completeness by the Contracting Officer and the Contractor prior to submission of each monthly pay estimate. If the Contractor fails to maintain the working and final as-built drawings as specified herein, the Contracting Officer will deduct from the monthly progress payment an amount representing the estimated cost of maintaining the as-built drawings. This monthly deduction will continue until an agreement can be reached between the Contracting Officer and the Contractor regarding the accuracy and completeness of updated drawings. The working and final as-built drawings shall show, but shall not be limited to, the following information:

b. The actual location, kinds and sizes of all sub-surface utility lines. In order that the location of these lines and appurtenances may be determined in the event the surface openings or indicators become covered over or obscured, the as-built drawings shall show, by offset dimensions to two permanently fixed surface features, the end of each run including each change in direction. Valves, splice boxes and similar appurtenances shall be located by dimensioning along the utility run from a reference point. The average depth below the surface of each run shall also be recorded.

c. The location and dimensions of any changes within the building structure.

d. Correct grade, elevations, cross section, or alignment of roads, earthwork, structures or utilities if any changes were made from contract plans.

e. Changes in details of design or additional information obtained from working drawings

specified to be prepared and/or furnished by the Contractor; including but not limited to fabrication, erection, installation plans and placing details, pipe sizes, insulation material, dimensions of equipment foundations, etc.

f. The topography, invert elevations and grades of drainage installed or affected as part of the project construction.

g. Changes or modifications which result from the final inspection.

h. Where contract drawings or specifications present options, only the option selected for construction shall be shown on the final as-built prints.

i. If borrow material for this project is from sources on Government property, or if Government property is used as a spoil area, the Contractor shall furnish a contour map of the final borrow pit/spoil area elevations.

j. Systems designed or enhanced by the Contractor, such as HVAC controls, fire alarm, fire sprinkler, and irrigation systems.

k. Modifications (change order price shall include the Contractor's cost to change working and final as-built drawings to reflect modifications) and compliance with the following procedures.

(1) Directions in the modification for posting descriptive changes shall be followed.

(2) A Modification Circle shall be placed at the location of each deletion.

(3) For new details or sections which are added to a drawing, a Modification Circle shall be placed by the detail or section title.

(4) For minor changes, a Modification Circle shall be placed by the area changed on the drawing (each location).

(5) For major changes to a drawing, a Modification Circle shall be placed by the title of the affected plan, section, or detail at each location.

(6) For changes to schedules or drawings, a Modification Circle shall be placed either by the schedule heading or by the change in the schedule.

(7) The Modification Circle size shall be 12.7 mm 1/2 inch diameter unless the area where the circle is to be placed is crowded. Smaller size circle shall be used for crowded areas.

1.2.1.3 Drawing Preparation

The as-built drawings shall be modified as may be necessary to correctly show the features of the project as it has been constructed by bringing the contract set into agreement with approved working as-built prints, and adding such additional drawings as may be necessary. These

working as-built marked prints shall be neat, legible and accurate. These drawings are part of the permanent records of this project and shall be returned to the Contracting Officer after approval by the Government. Any drawings damaged or lost by the Contractor shall be satisfactorily replaced by the Contractor at no expense to the Government.

1.2.1.4 Computer Aided Design and Drafting (CADD) Drawings

a. Only personnel proficient in the preparation of CADD drawings shall be employed to modify the contract drawings or prepare additional new drawings. Additions and corrections to the contract drawings shall be equal in quality and detail to that of the originals. Line colors, line weights, lettering, layering conventions, and symbols shall be the same as the original line colors, line weights, lettering, layering conventions, and symbols. If additional drawings are required, they shall be prepared using the specified electronic file format applying the same graphic standards specified for original drawings. The title block and drawing border to be used for any new final as-built drawings shall be identical to that used on the contract drawings. Additions and corrections to the contract drawings shall be accomplished using CADD files. The Contractor will be furnished "as-designed" drawings in AutoCAD Release 2007 or Microstation V8 format compatible with a Windows XP operating system. The electronic files will be supplied on compact disc, read-only memory (CD-ROM). The Contractor shall be responsible for providing all program files and hardware necessary to prepare final as-built drawings.

b. Prior to submittal of the first design submittal involving CADD drawings, the Contractor shall prepare one typical CADD drawing for the project and furnish, via ENG Form 4025, the electronic CADD drawing file for review and approval by the Contracting Officer. All Government comments involving changes to this single drawing shall be accomplished and resubmittal(s) made until the Government is satisfied that all CADD Standards are being followed and all subsequent drawings will also be in compliance with these Standards.

c. CADD colors shall be the "base" colors of red, green, and blue. Color code for changes shall be as follows:

(1) Deletions (red) - Deleted graphic items (lines) shall be colored red with red lettering in notes and leaders.

(2) Additions (Green) - Added items shall be drawn in green with green lettering in notes and leaders.

(3) Special (Blue) - Items requiring special information, coordination, or special detailing or detailing notes shall be in blue.

d. The Contract Drawing files shall be renamed in a manner related to the contract number (i.e., 98-C-10.DGN) as instructed in the Pre-Construction conference. Marked-up changes shall be made only to those renamed files. All changes shall be made on the layer/level as the original item. There shall be no deletions of existing lines; existing lines shall be over struck in red. Additions shall be in green with line weights the same as the drawing. Special notes shall be in blue on layer#63.

e. When final revisions have been completed, the cover sheet drawing shall show the wording "RECORD DRAWING AS-BUILT" followed by the name of the Contractor in letters at least 5 mm 3/16 inch high. All other contract drawings shall be marked either "As-Built" drawing denoting no revisions on the sheet or "Revised As-Built" denoting one or more revisions. Original contract drawings shall be dated in the revision block.

f. After Government approval of all of the working as-built drawings for a phase of work, the Contractor shall prepare the final CADD as-built drawings for that phase of work and submit two sets of full size paper copy prints of these drawings for Government review, comparison with approved red-line marked up drawings, and approval. The Government will promptly return one set of prints annotated with any necessary corrections to the CADD file(s) if corrections are required prior to approval. Within 20 days of substantial completion of all phases of work, the Contractor shall submit the final as-built drawing package for the entire project. The submittal shall consist of one set of electronic files on compact disc, read-only memory (CD-ROM), one set of full size paper prints and one set of the approved working as-built drawings. They shall be complete in all details and identical in form and function to the contract drawing files supplied by the Government. Any transactions or adjustments necessary to accomplish this is the responsibility of the Contractor. The Government reserves the right to reject any drawing files it deems incompatible with the CADD system. Upon approval by the Government of the final as-built drawing package for the entire project, the Contractor shall provide the number of as-built copies noted in Paragraph 1.1 of this Section.

g. Paper prints, drawing files and storage media submitted will become the property of the Government upon final approval. Failure to submit final as-built drawing files and marked prints as specified shall be cause for withholding any payment due the Contractor under this contract. Approval and acceptance of final as-built drawings shall be accomplished before final payment is made to the Contractor.

1.2.1.5 Payment

No separate payment will be made for as-built drawings required under this contract, and all costs accrued in connection with such drawings shall be considered a subsidiary obligation of the Contractor.

1.2.2 As-Built Record of Equipment and Materials

The Contractor shall furnish one copy of preliminary record of equipment and materials used on the project 15 days prior to final inspection. This preliminary submittal will be reviewed and returned 2 days after final inspection with Government comments. Two sets of final record of equipment and materials shall be submitted 10 days after final inspection. The designations shall be keyed to the related area depicted on the contract drawings. The record shall list the following data:

RECORD OF DESIGNATED EQUIPMENT AND MATERIALS DATA

Description	Specification Section	Manufacturer and Catalog, Model, and Serial Number	Composition and Size	Where Used

1.2.3 Final Approved Shop Drawings

The Contractor shall furnish final approved project shop drawings 30 days after transfer of the completed facility.

1.2.4 Construction Contract Specifications

The Contractor shall furnish final as-built construction contract specifications, including modifications thereto, 30 days after transfer of the completed facility.

1.2.5 Real Property Equipment

The Contractor shall furnish a list of installed equipment furnished under this contract. The list shall include all information usually listed on manufacturer's name plate. The "EQUIPMENT-IN-PLACE LIST" shall include, as applicable, the following for each piece of equipment installed: description of item, location (by room number), model number, serial number, capacity, name and address of manufacturer, name and address of equipment supplier, condition, spare parts list, manufacturer's catalog, and warranty. A draft list shall be furnished at time of transfer. The final list shall be furnished 30 days after transfer of the completed facility.

1.3 WARRANTY MANAGEMENT

1.3.1 Warranty Management Plan

The Contractor shall develop a warranty management plan which shall contain information relevant to the clause Warranty of Construction. At least 30 days before the planned pre-warranty conference, the Contractor shall submit the warranty management plan for Government approval. The warranty management plan shall include all required actions and documents to assure that the Government receives all warranties to which it is entitled. The plan shall be in narrative form and contain sufficient detail to render it suitable for use by future maintenance and repair personnel, whether tradesmen, or of engineering background, not necessarily familiar with this contract. The term "status" as indicated below shall include due date and whether item has been submitted or was accomplished. Warranty information made available during the construction phase shall be submitted to the Contracting Officer for approval prior to each monthly pay estimate. Approved information shall be assembled in a binder and shall be turned over to the Government upon acceptance of the work. The construction warranty period shall

begin on the date of project acceptance and shall continue for the full product warranty period. A joint 4 month and 9 month warranty inspection shall be conducted, measured from time of acceptance, by the Contractor, Contracting Officer and the Customer Representative. Information contained in the warranty management plan shall include, but shall not be limited to, the following:

a. Roles and responsibilities of all personnel associated with the warranty process, including points of contact and telephone numbers within the organizations of the Contractors, subcontractors, manufacturers or suppliers involved.

b. Listing and status of delivery of all Certificates of Warranty for extended warranty items, to include roofs, HVAC balancing, pumps, motors, transformers, and for all commissioned systems such as fire protection and alarm systems, sprinkler systems, lightning protection systems, etc.

c. A list for each warranted equipment, item, feature of construction or system indicating:

1. Name of item.
2. Model and serial numbers.
3. Location where installed.
4. Name and phone numbers of manufacturers or suppliers.
5. Names, addresses and telephone numbers of sources of spare parts.
6. Warranties and terms of warranty. This shall include one-year overall warranty of construction. Items which have extended warranties shall be indicated with separate warranty expiration dates.
7. Cross-reference to warranty certificates as applicable.
8. Starting point and duration of warranty period.
9. Summary of maintenance procedures required to continue the warranty in force.
10. Cross-reference to specific pertinent Operation and Maintenance manuals.
11. Organization, names and phone numbers of persons to call for warranty service.
12. Typical response time and repair time expected for various warranted equipment.

d. The Contractor's plans for attendance at the 4 and 9 month post-construction warranty inspections conducted by the Government.

e. Procedure and status of tagging of all equipment covered by extended warranties.

f. Copies of instructions to be posted near selected pieces of equipment where operation is critical for warranty and/or safety reasons.

1.3.2 Pre-Warranty Conference

Prior to contract completion, and at a time designated by the Contracting Officer, the Contractor shall meet with the Contracting Officer to develop a mutual understanding with respect to the requirements of this section. Communication procedures for Contractor notification of construction warranty defects, priorities with respect to the type of defect, reasonable time

required for Contractor response, and other details deemed necessary by the Contracting Officer for the execution of the construction warranty shall be established/reviewed at this meeting. In connection with these requirements and at the time of the Contractor's quality control completion inspection, the Contractor shall furnish the name, telephone number and address of a licensed and bonded company which is authorized to initiate and pursue construction warranty work action on behalf of the Contractor. This point of contact will be located within the local service area of the warranted construction, shall be continuously available, and shall be responsive to Government inquiry on warranty work action and status. This requirement does not relieve the Contractor of any of its responsibilities in connection with other portions of this provision.

1.3.3 Contractor's Response to Construction Warranty Service Requirements

Following oral or written notification by the Contracting Officer, the Contractor shall respond to construction warranty service requirements in accordance with the "Construction Warranty Service Priority List" and the three categories of priorities listed below. The Contractor shall submit a report on any warranty item that has been repaired during the warranty period. The report shall include the cause of the problem, date reported, corrective action taken, and when the repair was completed. If the Contractor does not perform the construction warranty within the timeframes specified, the Government will perform the work and backcharge the construction warranty payment item established.

a. First Priority Code 1. Perform onsite inspection to evaluate situation, and determine course of action within 4 hours, initiate work within 6 hours and work continuously to completion or relief.

b. Second Priority Code 2. Perform onsite inspection to evaluate situation, and determine course of action within 8 hours, initiate work within 24 hours and work continuously to completion or relief.

c. Third Priority Code 3. All other work to be initiated within 3 work days and work continuously to completion or relief.

d. The "Construction Warranty Service Priority List" is as follows:

Code 1-Air Conditioning Systems

1) Recreational support.
2) Air conditioning leak in part of building, if causing damage.
3) Air conditioning system not cooling properly.

Code 1-Doors

1) Overhead doors not operational, causing a security, fire, or safety problem.
2) Interior, exterior personnel doors or hardware, not functioning properly, causing a security, fire, or safety problem.

Code 3-Doors

1) Overhead doors not operational.

2) Interior/exterior personnel doors or hardware not functioning properly.

Code 1-Electrical

1) Power failure (entire area or any building operational after 1600 hours).
2) Security lights
3) Smoke detectors

Code 2-Electrical

1) Power failure (no power to a room or part of building).
2) Receptacle and lights (in a room or part of building).

Code 3-Electrical

Street lights.

Code 1-Gas

1) Leaks and breaks.
2) No gas to family housing unit or cantonment area.

Code 1-Heat

1) Area power failure affecting heat.
2) Heater in unit not working.

Code 2-Kitchen Equipment

1) Dishwasher not operating properly.
2) All other equipment hampering preparation of a meal.

Code 1-Plumbing

1) Hot water heater failure.
2) Leaking water supply pipes.

Code 2-Plumbing

1) Flush valves not operating properly.
2) Fixture drain, supply line to commode, or any water pipe leaking.
3) Commode leaking at base.

Code 3 –Plumbing

Leaky faucets.

Code 3-Interior

1) Floors damaged.
2) Paint chipping or peeling.
3) Casework.

Code 1-Roof Leaks

Temporary repairs will be made where major damage to property is occurring.

Code 2-Roof Leaks

Where major damage to property is not occurring, check for location of leak during rain and complete repairs on a Code 2 basis.

Code 2-Water (Exterior)

No water to facility.

Code 2-Water (Hot)

No hot water in portion of building listed.

Code 3-All other work not listed above.

1.3.5 Warranty Tags

At the time of installation, each warranted item shall be tagged with a durable, oil and water resistant tag approved by the Contracting Officer. Each tag shall be attached with a copper wire and shall be sprayed with a silicone waterproof coating. The date of acceptance and the QC signature shall remain blank until project is accepted for beneficial occupancy. The tag shall show the following information.

a. Type of product/material_____.

b. Model number_____.

c. Serial number_____.

d. Contract number_____.

e. Warranty period_____from_____to_____.

f. Inspector's signature_____.

g. Construction Contractor_____.
Address_____. Telephone number_____.

h. Warranty contact_____.
Address_____. Telephone number_____.

i. Warranty response time priority code_____.

j. WARNING - PROJECT PERSONNEL TO PERFORM ONLY OPERATIONAL MAINTENANCE DURING THE WARRANTY PERIOD.

1.4 MECHANICAL TESTING, ADJUSTING, BALANCING, AND COMMISSIONING

Prior to final inspection and transfer of the completed facility; all reports, statements, certificates, and completed checklists for testing, adjusting, balancing, and commissioning of mechanical systems shall be submitted to and approved by the Contracting Officer as specified inapplicable technical specification sections.

1.5 OPERATION AND MAINTENANCE MANUALS

Three (3) copies of all Operation and Maintenance (O&M) manuals shall be submitted as follows:

AFGHANISTAN ENGINEER DISTRICT

(1) DHL, FEDEX, UPS or any other courier service:

U.S. Army Corps of Engineers
Afghanistan Engineer District
House # 1, St. #1 West
West Wazir Akbar High School
Behind Amani High School
Kabul, Afghanistan
Attn: Chief, Engineering Branch

or

(2) U.S. Postal Service:
U.S. Army Corps of Engineers
Afghanistan Engineer District (CEAED-EC)
Attn.: Chief, Engineering Division
APO AE 09356

Operation manuals and maintenance manuals shall be provided in a common volume, complete, clearly differentiated and separately indexed.

1.6 FINAL CLEANING

The premises shall be left broom clean. Stains, foreign substances, and temporary labels shall be removed from surfaces. Carpet and soft surfaces shall be vacuumed. Equipment and fixtures shall be cleaned to a sanitary condition. Filters of operating equipment shall be replaced. Debris shall be removed from roofs, drainage systems, gutters, and downspouts. Paved areas shall be swept and landscaped areas shall be raked clean. The site shall have waste, surplus materials, and rubbish removed. The project area shall have temporary structures, barricades, project signs, and construction facilities removed. A list of completed clean-up items shall be submitted on the day of final inspection.

PART 2 PRODUCTS (NOT USED)

PART 3 EXECUTION (NOT USED)

-- End of Section -

SECTION 01781

OPERATION AND MAINTENANCE DATA
SOUTH PARK IMPROVEMENTS PROJECT

PART 1GENERAL

1.1 SUBMISSION OF OPERATION AND MAINTENANCE DATA

Submit Operation and Maintenance (O&M) Data specifically applicable to this contract and a complete and concise depiction of the provided equipment, product, or system. Organize and present information in sufficient detail to clearly explain O&M requirements at the system, equipment, component, and subassembly level. Include an index preceding each submittal. Submit in accordance with this section and Section 01335 SUBMITTAL PROCEDURES.

1.1.1 Package Quality

Documents must be fully legible. Poor quality copies and material with hole punches obliterating the text or drawings will not be accepted.

1.1.2 Package Content

Data package content shall be as shown in the paragraph titled "Schedule of Operation and Maintenance Data Packages." Comply with the data package requirements specified in the individual technical sections, including the content of the packages and addressing each product, component, and system designated for data package submission.

1.1.3 Changes to Submittals

Manufacturer-originated changes or revisions to submitted data shall be furnished by the Contractor if a component of an item is so affected subsequent to acceptance of the O&M Data. Changes, additions, or revisions required by the Contracting Officer for final acceptance of submitted data, shall be submitted by the Contractor within 30 calendar days of the notification of this change requirement.

1.2 TYPES OF INFORMATION REQUIRED IN O&M DATA PACKAGES

1.2.1 Operating Instructions

Include specific instructions, procedures, and illustrations for the following phases of operation:

1.2.1.1 Safety Precautions

List personnel hazards and equipment or product safety precautions for all operating conditions.

1.2.1.2 Operator Prestart

Include procedures required to set up and prepare each system for use.

1.2.1.3 Startup, Shutdown, and Post-Shutdown Procedures

Provide narrative description for Startup, Shutdown and Post-shutdown operating procedures including the control sequence for each procedure.

1.2.1.4 Normal Operations

Provide narrative description of Normal Operating Procedures. Include Control Diagrams with data to explain operation and control of systems and specific equipment.

1.2.1.5 Emergency Operations

Include Emergency Procedures for equipment malfunctions to permit a short period of continued operation or to shut down the equipment to prevent further damage to systems and equipment. Include Emergency Shutdown Instructions for fire, explosion, spills, or other foreseeable contingencies. Provide guidance and procedures for emergency operation of all utility systems including required valve positions, valve locations and zones or portions of systems controlled.

1.2.1.6 Operator Service Requirements

Include instructions for services to be performed by the operator such as lubrication, adjustment, inspection, and recording gage readings.

1.2.1.7 Environmental Conditions

Include a list of Environmental Conditions (temperature, humidity, and other relevant data) that are best suited for the operation of each product, component or system. Describe conditions under which the item equipment should not be allowed to run.

1.2.2 Preventive Maintenance

Include the following information for preventive and scheduled maintenance to minimize corrective maintenance and repair.

1.2.2.1 Lubrication Data

Include preventative maintenance lubrication data, in addition to instructions for lubrication provided under paragraph titled "Operator Service Requirements":

a. A table showing recommended lubricants for specific temperature ranges and applications.
b. Charts with a schematic diagram of the equipment showing lubrication points, recommended types and grades of lubricants, and capacities.
c. A Lubrication Schedule showing service interval frequency.

1.2.2.2 Preventive Maintenance Plan and Schedule

Include manufacturer's schedule for routine preventive maintenance, inspections, tests and adjustments required to ensure proper and economical operation and to minimize corrective maintenance. Provide manufacturer's projection of preventive maintenance work-hours on a daily, weekly, monthly, and annual basis including craft requirements by type of craft. For periodic calibrations, provide manufacturer's specified frequency and procedures for each separate operation.

1.2.3 Corrective Maintenance (Repair)

Include manufacturer's recommended procedures and instructions for correcting problems and making repairs.

1.2.3.1 Troubleshooting Guides and Diagnostic Techniques

Include step-by-step procedures to promptly isolate the cause of typical malfunctions. Describe clearly why the checkout is performed and what conditions are to be sought. Identify tests or inspections and test equipment required to determine whether parts and equipment may be reused or require replacement.

1.2.3.2 Wiring Diagrams and Control Diagrams

Wiring diagrams and control diagrams shall be point-to-point drawings of wiring and control circuits including factory-field interfaces. Provide a complete and accurate depiction of the actual job specific wiring and control work. On diagrams, number electrical and electronic wiring and pneumatic control tubing and the terminals for each type, identically to actual installation configuration and numbering.

1.2.3.3 Maintenance and Repair Procedures

Include instructions and a list of tools required to repair or restore the product or equipment to proper condition or operating standards.

1.2.3.4 Removal and Replacement Instructions

Include step-by-step procedures and a list required tools and supplies for removal, replacement, disassembly, and assembly of components, assemblies, subassemblies, accessories, and attachments. Provide tolerances, dimensions, settings and adjustments required. Instructions shall include a combination of text and illustrations.

1.2.3.5 Spare Parts and Supply Lists

Include lists of spare parts and supplies required for maintenance and repair to ensure continued service or operation without unreasonable delays. Special consideration is required for facilities at remote locations. List spare parts and supplies that have a long lead-time to obtain.

1.2.4 Corrective Maintenance Work-Hours

Include manufacturer's projection of corrective maintenance work-hours including requirements by type of craft. Corrective maintenance that requires completion or participation of the equipment manufacturer shall be identified and tabulated separately.

1.2.5 Appendices

Provide information required below and information not specified in the preceding paragraphs but pertinent to the maintenance or operation of the product or equipment. Include the following:

1.2.6 Parts Identification

Provide identification and coverage for all parts of each component, assembly, subassembly, and accessory of the end items subject to replacement. Include special hardware requirements, such as requirement to use high-strength bolts and nuts. Identify parts by make, model, serial number, and source of supply to allow reordering without further identification. Provide clear and legible illustrations, drawings, and exploded views to enable easy identification of the items. When illustrations omit the part numbers and description, both the illustrations and separate listing shall show the index, reference, or key number that will cross-reference the illustrated part to the listed part. Parts shown in the listings shall be grouped by components, assemblies, and subassemblies in accordance with the manufacturer's standard practice. Parts data may cover more than one model or series of equipment, components, assemblies, subassemblies, attachments, or accessories, such as

typically shown in a master parts catalog

1.2.6.1 Warranty Information

List and explain the various warranties and include the servicing and technical precautions prescribed by the manufacturers or contract documents in order to keep warranties in force. Include warranty information for primary components such as the compressor of air conditioning system.

1.2.6.2 Personnel Training Requirements

Provide information available from the manufacturers that is needed for use in training designated personnel to properly operate and maintain the equipment and systems.

1.2.6.3 Testing Equipment and Special Tool Information

Include information on test equipment required to perform specified tests and on special tools needed for the operation, maintenance, and repair of components.

1.2.6.4 Contractor Information

Provide a list that includes the name, address, and telephone number of the General Contractor and each Subcontractor who installed the product or equipment, or system. For each item, also provide the name address and telephone number of the manufacturer's representative and service organization most convenient to the project site. Provide the name, address, and telephone number of the product, equipment, and system manufacturers.

PART 2PRODUCTS

Not used.

PART 3EXECUTION

3.1 TRAINING

Unless provided for elsewhere, the Contractor shall provide operational and maintenance training for all systems furnished under this contract in accordance with this section. The training shall not take place until the operation and maintenance manuals are submitted and approved.

Training will be given to personnel responsible for the operation and maintenance of the system at the installation. Orient training to the specific system being installed under this contract. Use operation and maintenance manual as the primary instructional aid in contractor provided activity personnel training. Manuals shall be delivered for each trainee with two additional sets delivered for archiving at the project site. Submit a training course schedule, syllabus, and training materials 14 days prior to the start of training. Obtain approval of the training course before beginning that phase of training. Furnish a qualified instructor approved by the system manufacturer to conduct training for the specific system.

Training manuals shall include an agenda, defined objectives and a detailed description of the subject matter for each lesson. Furnish audio-visual equipment and all other training materials and supplies. A training day is defined as 8 hours of classroom or lab instruction, including two 15 minute breaks and excluding lunch time, Monday through Friday, during the daytime shift in effect at the training facility. For guidance, the Contractor should assume the attendees will have a high school education.

The Contractor shall videotape the training session on VHS tapes and provide the tapes to the Government.

-- End of Section --

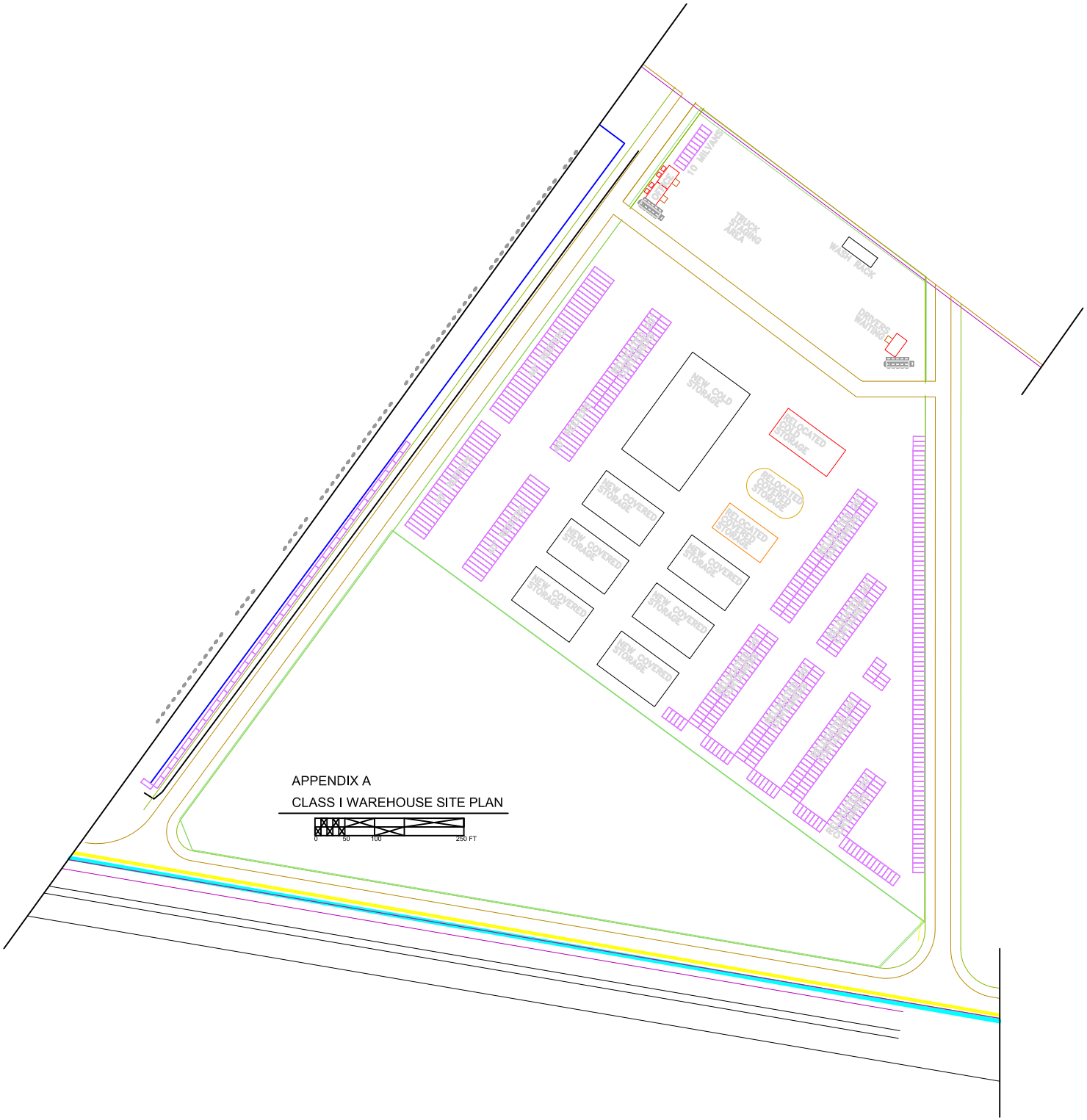

APPENDIX A

CLASS I WAREHOUSE SITE PLAN

APPENDIX A

ENTRY CONTROL POINT PLAN

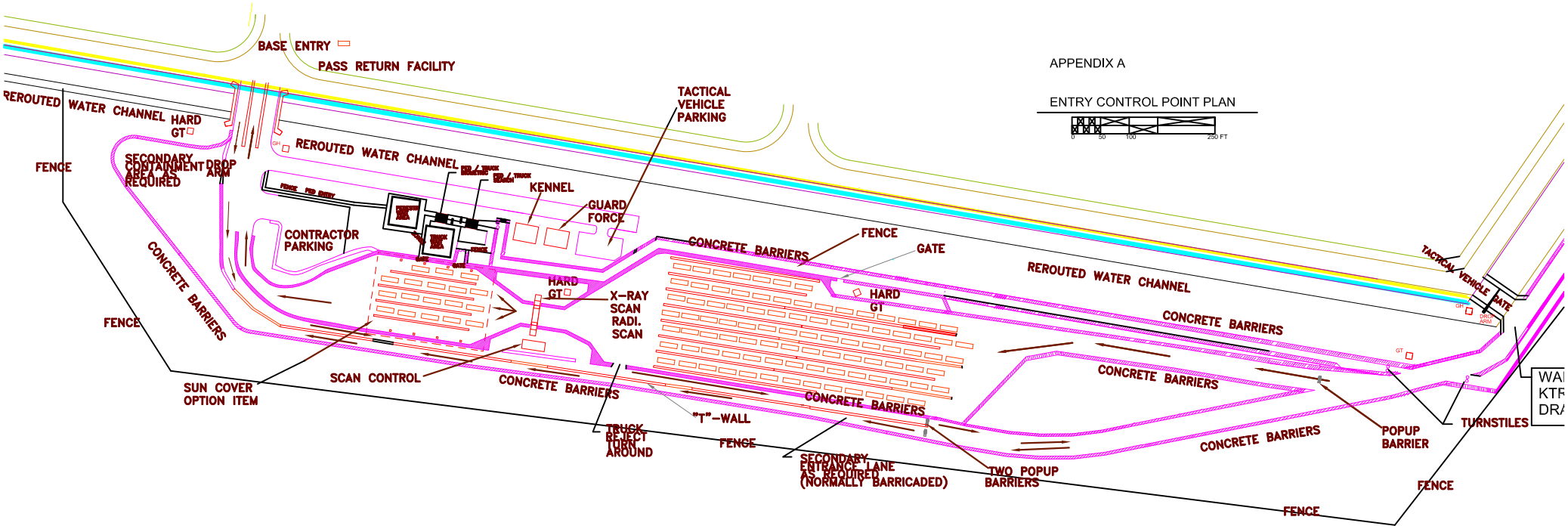

APPENDIX A

ENTRY CONTROL POINT PLAN

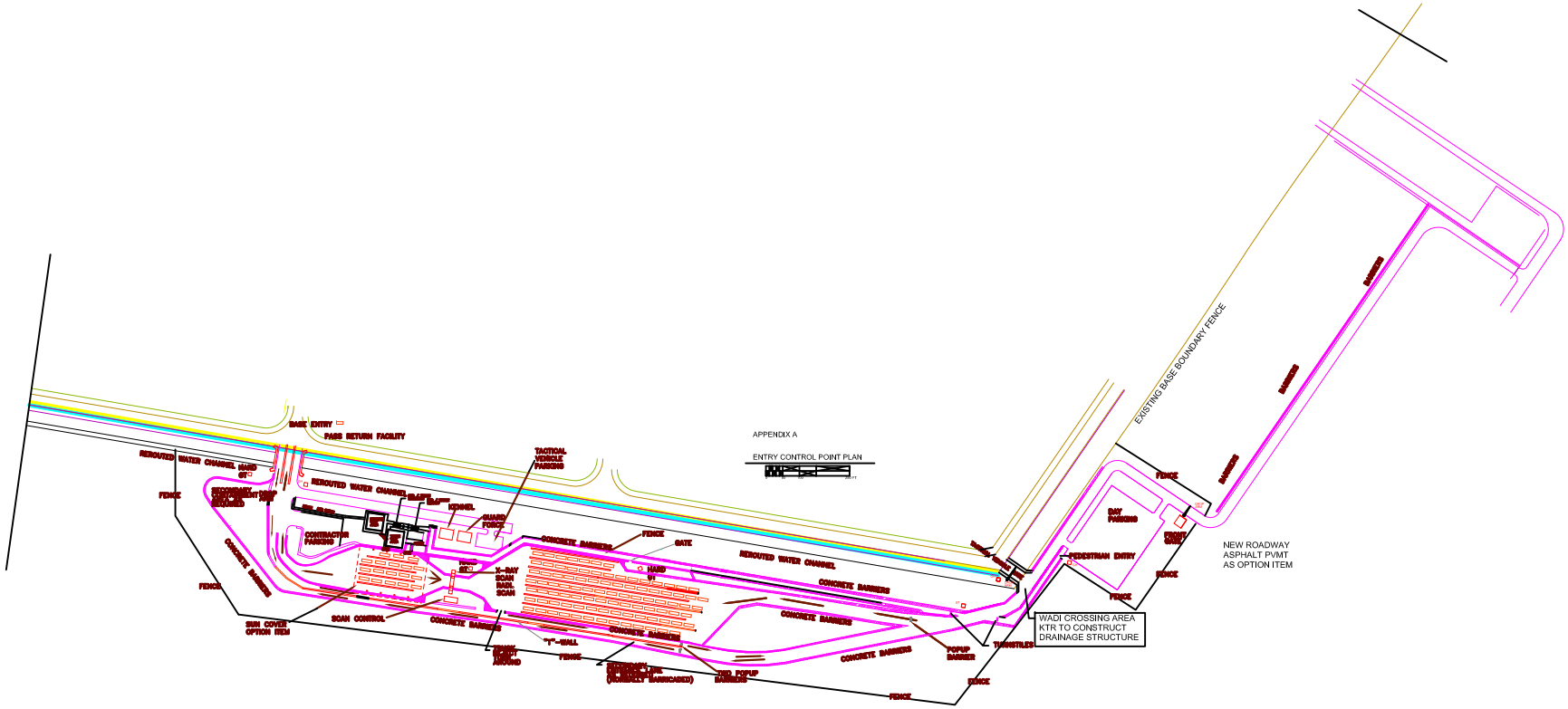

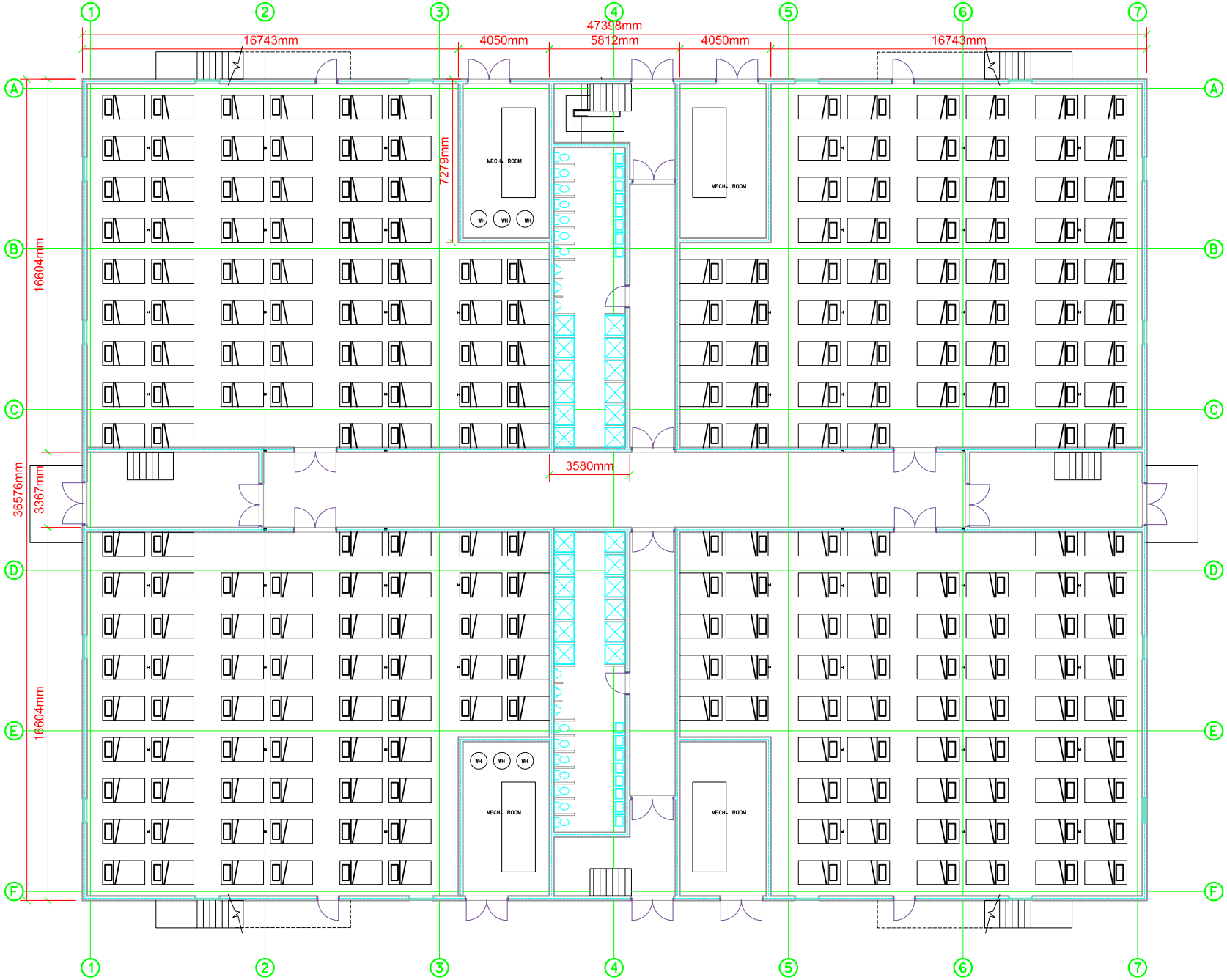

APP A - RSOI BARRACKS FIRST FLOOR PLAN

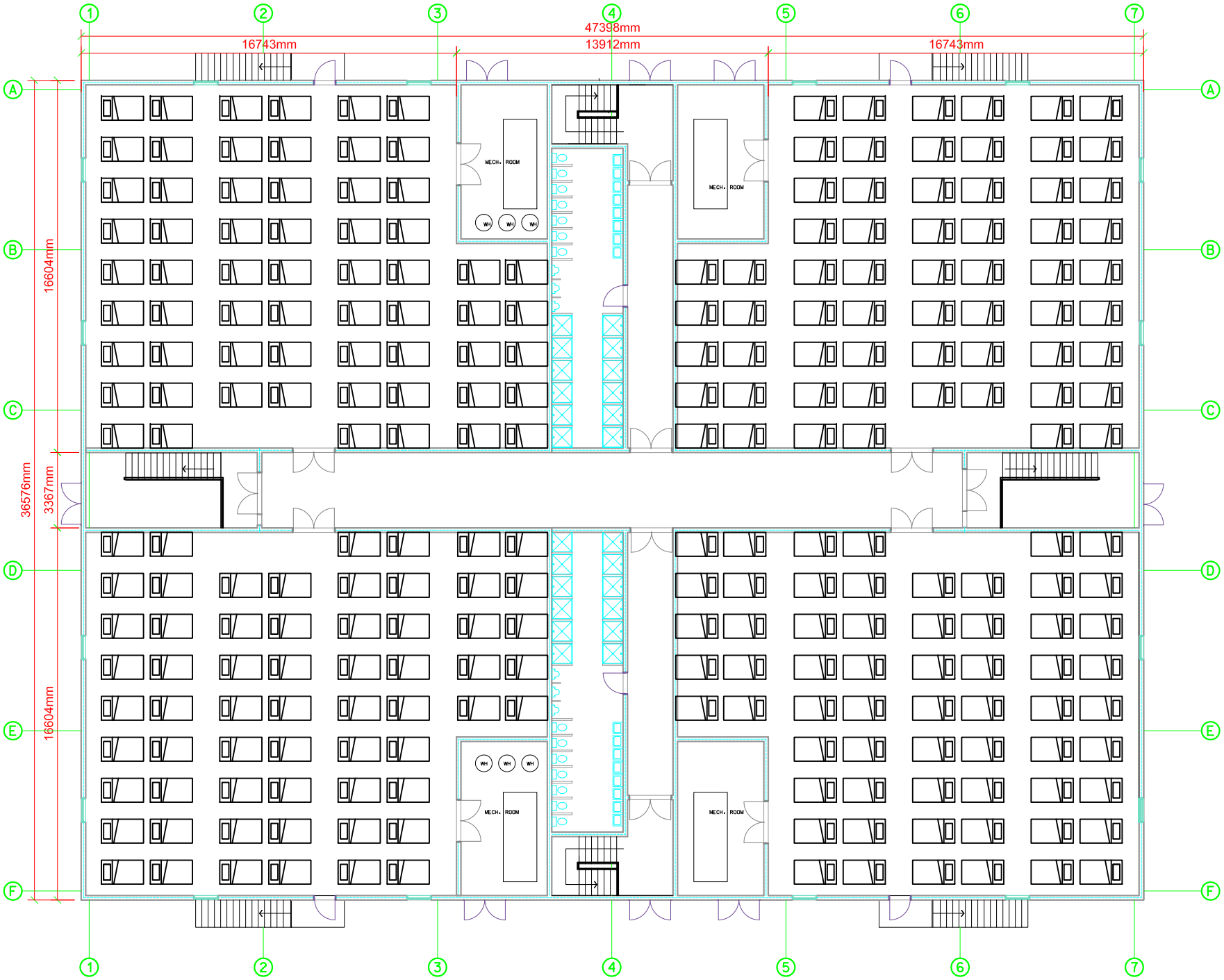

APP A - RSOI BARRACKS SECOND FLOOR PLAN

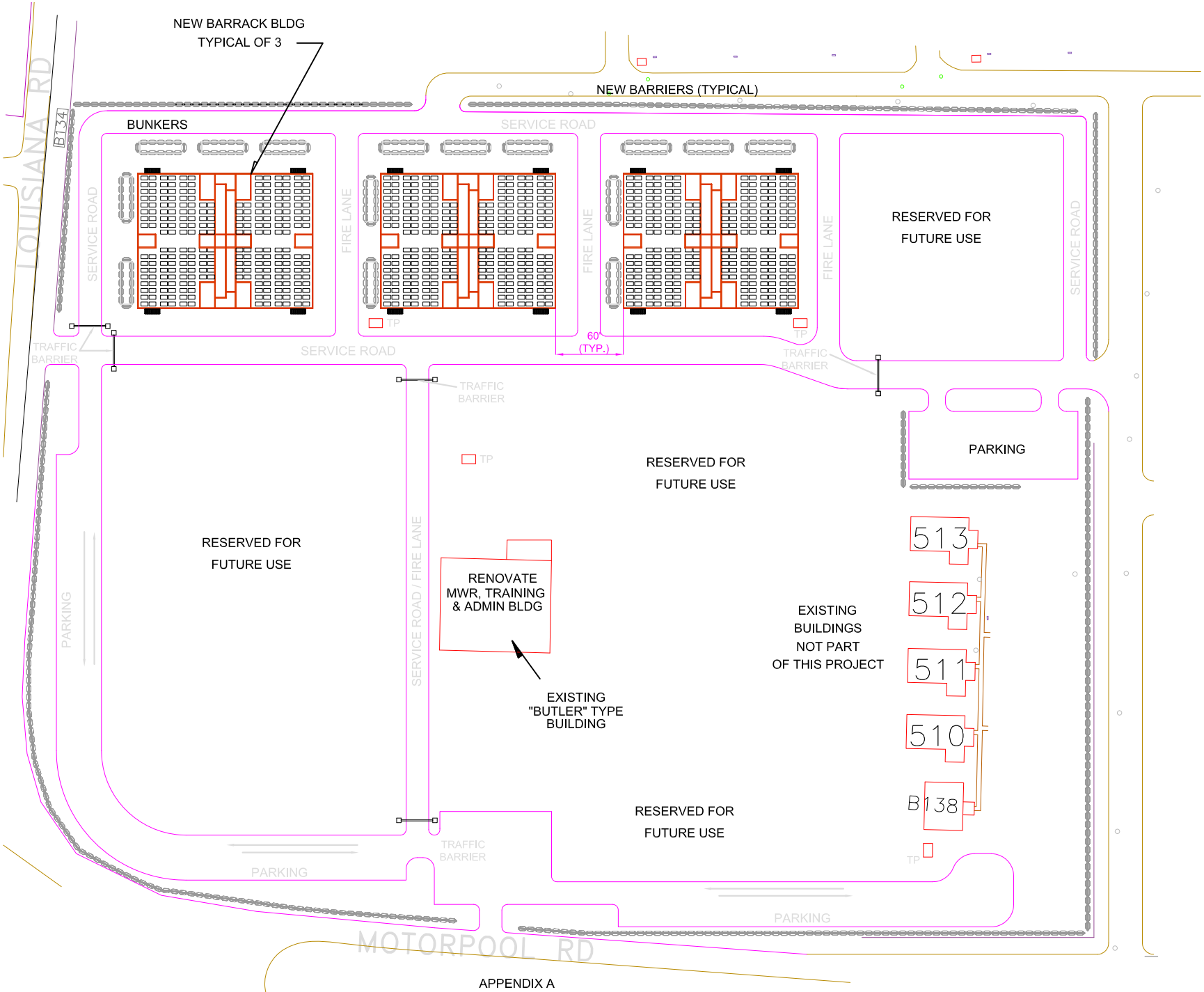

APPENDIX A

NEW RSOI COMPLEX

0 50 150 FT

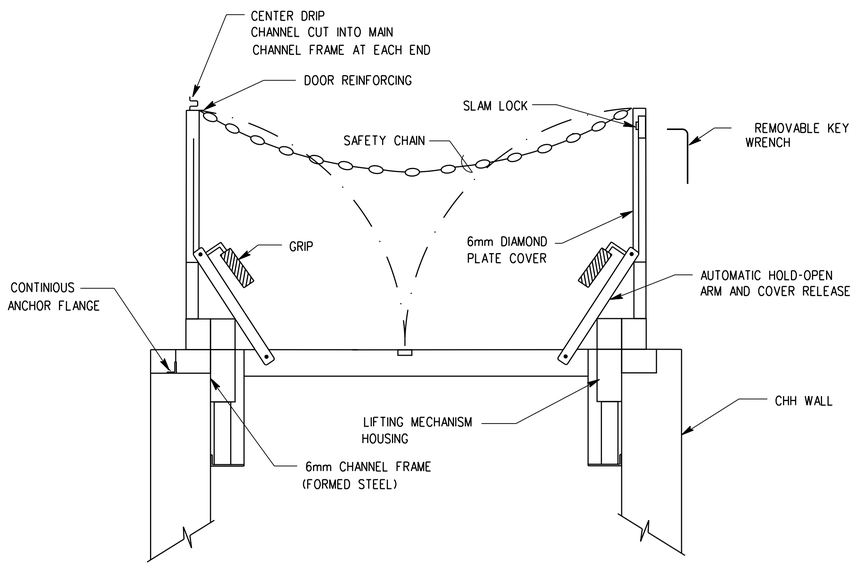

COVER DESIGNED TO WITHSTAND H20 WHEEL LOADING SUITABLE FOR USE IN OFF STREET LOCATIONS WHERE NOT SUBJECTED TO HIGH DENSITY TRAFFIC. COVER TO HAVE DOCUMENTED VERIFICATION TO THE AASHTO H20 LOAD RATING.

COMMUNICATION HANDHOLE COVER

NOT TO SCALE

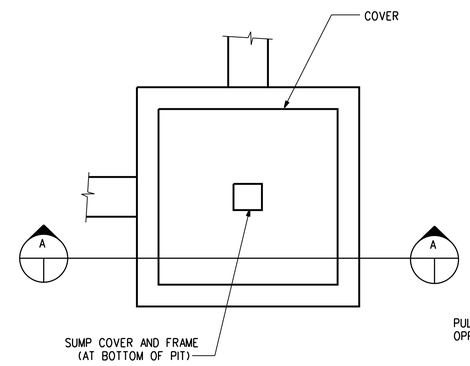

PLAN

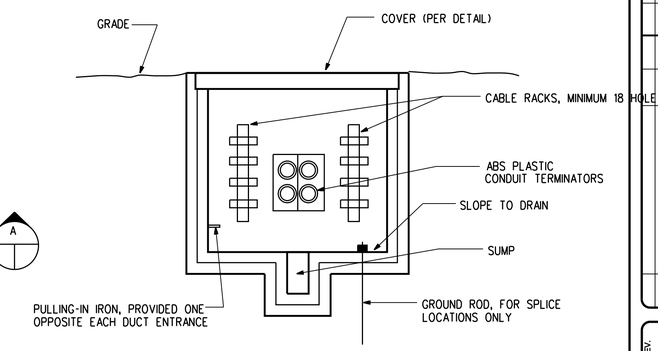

SECTION "A-A"

BONDING RIBBON TO BE INSTALLED AROUND THE PERIMETER OF THE HANDHOLE.

MINIMUM CONCRETE THICKNESS	
HANDHOLE WALLS TOP AND FLOOR	205mm

CONSTRUCTION REQUIREMENTS				
MINIMUM REQUIREMENTS				
TYPE	HEIGHT	LENGTH	WIDTH	SUMP DEPTH
THH	NOTE 1	1.2m	1.2m	.25m

NOTE:
1. HEIGHT REQUIORED FOR MINIMUM CONDUIT DEPTHS INDICATED

MINIMUM REINFORCING

1. BARS WILL BE A MINIMUM OF 13 0 ROUND DEFORMED.
2. WALLS AND FLOOR WILL HAVE BARS AT 200mm MAXIMUM ON CENTERS WITH A MINIMUM 300 mm HOOK AT CORNERS AND INTERSECTIONS.
3. THE TOP SHALL HAVE BARS INSTALLED AS SHOWN AT A MINIMUM OF 50mm FROM THE OPENING AND WITH A MINIMUM 100mm SPACING BETWEEN BARS.

COMMUNICATION HANDHOLE DETAIL

NOT TO SCALE

US ARMY CORPS
OF ENGINEERS
AFGHANISTAN
ENGINEER DISTRICT

SYMBOL	DESCRIPTION	DATE	APPR.	SYMBOL	DESCRIPTION	DATE	APPR.

DESIGNED BY: DWN BY: CKD BY: REVIEWED BY: SUBMITTED BY:
DATE: XX-XX-XX REV. —
DESIGN FILE NO.
DRAWING CODE:
FILE NAME:
PLOT SCALE:
PLOT DATE: XX-XX-XX

U.S. ARMY ENGINEER DISTRICT, AFGHANISTAN
CORPS OF ENGINEERS
APO AE 98338

ENGINEERING AND CONSTRUCTION DIVISION

PROJECT NO.XXXX
PROJECT TITLE
INSTALLATION NAME

DRAWING TITLE

SHEET REFERENCE NUMBER:
X-XXX
SHEET — OF —

A1 Size 594mm x 841mm

NOTES

NOTE 1. 47 HOLE CABLE RACK MOUNTED ON STAND OFF BRACKET.

NOTE 2. 47 HOLE CABLE RACK MOUNTED DIRECTLY TO THE WALL.

NOTE 3. BONDING RIBBON TO BE 1.6mm THICK, 9.5mm WIDE, TINNED COPPER.

NOTE 4. GROUND ROD TO BE 20mm IN DIAMETER, 3 METERS LONG COPPER CLAD STEEL GROUND ROD CAN BE INSTALLED IN SUMP OR OUTSIDE THE MANHOLE AND A #6 COPPER WIRE BROUGHT IN VIA A WATER TIGHT SLEEVE. GROUND WIRE, #6 COPPER TO BE EXOTHERMIC WELDED TO GROUND ROD AND CONNECTED TO BONDING RIBBON VIA A PROPER CLAMP, GROUND RESISTANCE TO BE A MINIMUM 25 OHMS.

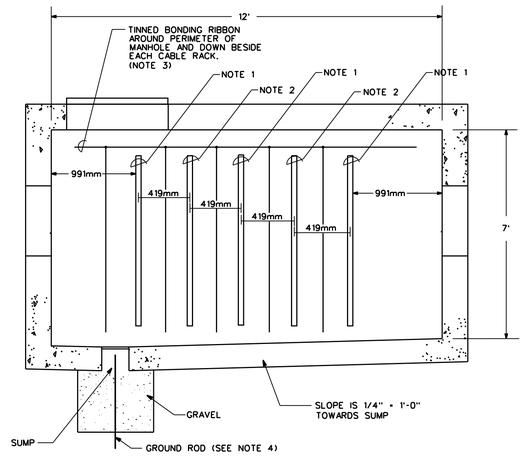

12 FT. MANHOLE CABLE RACK INSTALLATION
SIDE VIEW
NOT TO SCALE

NOTE: SIDE WINDOWS NOT SHOWN FOR CLARITY.

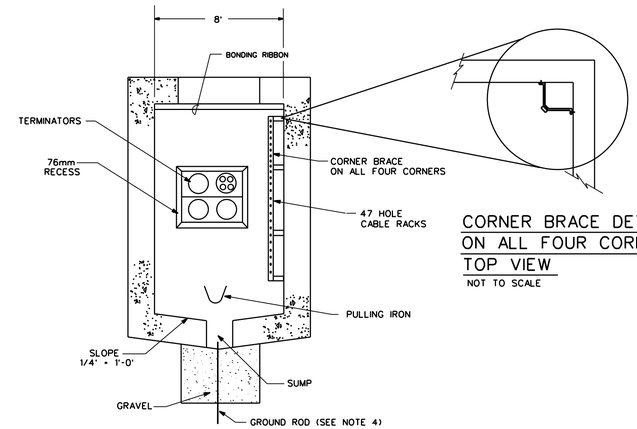

CORNER BRACE DETAIL
ON ALL FOUR CORNERS
TOP VIEW
NOT TO SCALE

MANHOLE CABLE RACK INSTALLATION
END VIEW
NOT TO SCALE

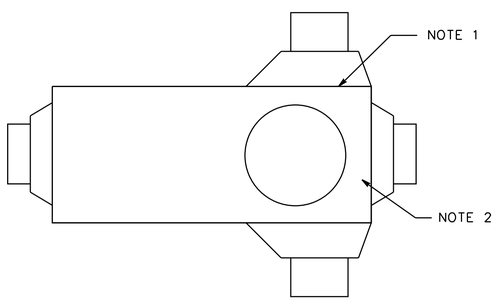

TYPICAL MANHOLE TYPE J
NOT TO SCALE

NOTE 1. SIDE WINDOW RECESS TO BE 203mm.

NOTE 2. END WALL WINDOW RECESS TO BE 76mm.

	A	B	C	D	E	F	G	H	I
MANHOLE	31-7/8	2	3-1/4	32	2	30	41	49	10

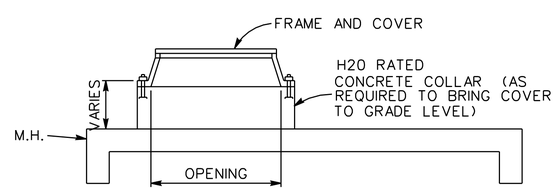

MANHOLE NECK DETAIL TYPE J
NOT TO SCALE

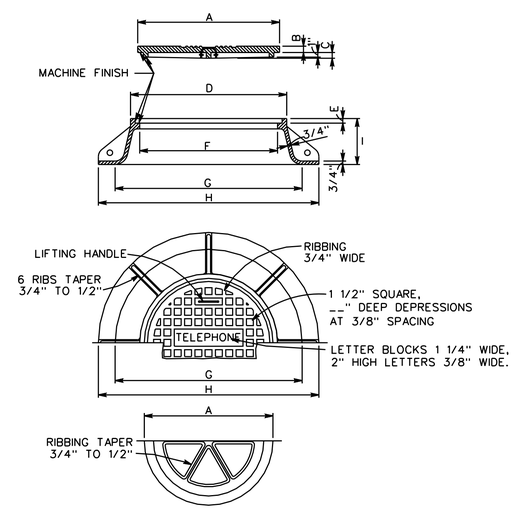

TYPE" B" MANHOLE FRAME AND COVER DETAILS
NOT TO SCALE

US ARMY CORPS OF ENGINEERS
AFGHANISTAN ENGINEER DISTRICT

SYMBOL	DESCRIPTION	DATE	APPR.	SYMBOL	DESCRIPTION	DATE	APPR.

DESIGNED BY: DATE: XX-XX-XX REV. ___
DWN BY: CKD BY: DESIGN FILE NO. ___
REVIEWED BY: DRAWING CODE: ___
SUBMITTED BY: FILE NAME: ___ PLOT SCALE: ___ PLOT DATE: XX-XX-XX

U.S. ARMY ENGINEER DISTRICT, AFGHANISTAN
CORPS OF ENGINEERS
APO AE 96338

ENGINEERING AND CONSTRUCTION DIVISION

PROJECT NO.XXXX
PROJECT TITLE
INSTALLATION NAME

DRAWING TITLE

SHEET REFERENCE NUMBER:
X-XXX
SHEET — OF —

A1 Size 594mm x 841mm

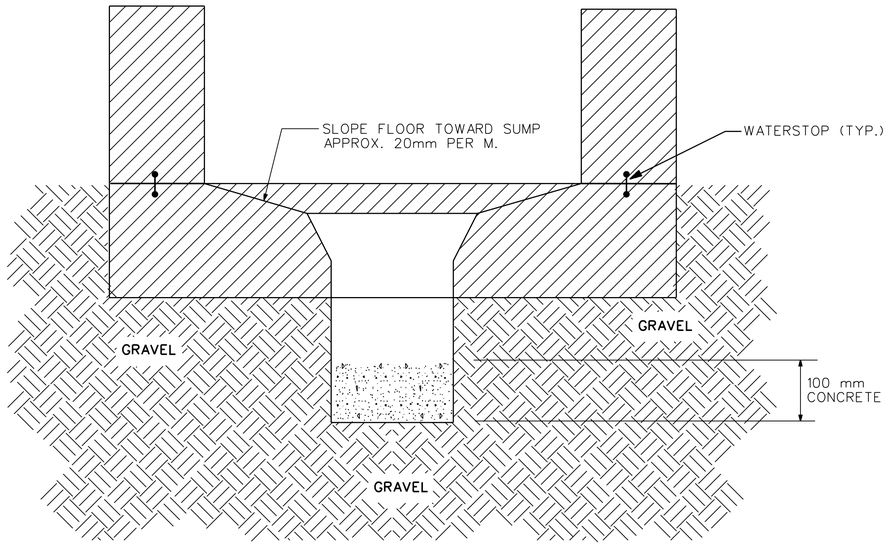

MANHOLE SUMP AND DRAIN CONSTRUCTION

N.T.S.

TYPICAL MANHOLE FLOOR TYPE J

NOT TO SCALE

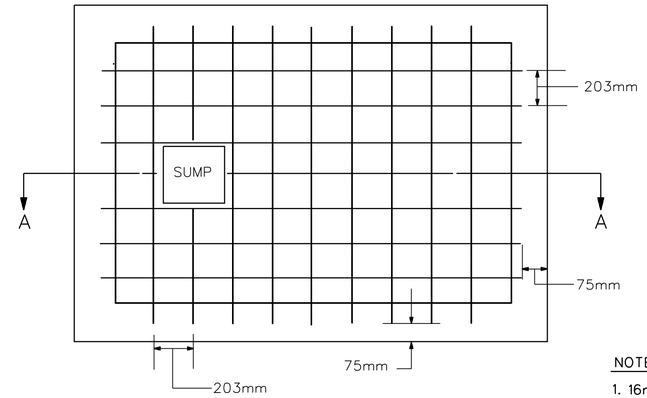

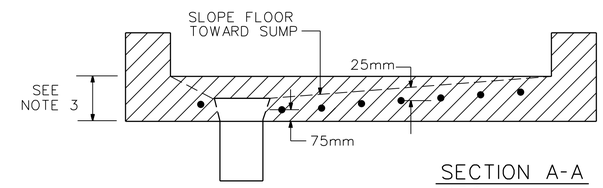

SECTION A-A

N.T.S.

NOTES:

1. 16mm ROUND DEFORMED BARS SPACED 203mm O.C.
2. PROVIDE A MINIMUM OF 51mm OF CONCRETE BELOW AND ABOVE BARS.
3. LOWEST BAR TO HAVE 75mm OF CONCRETE BETWEEN BAR AND GROUND,

TYPICAL WALL REINFORCING WITH CONDUIT WINDOW

NOT TO SCALE

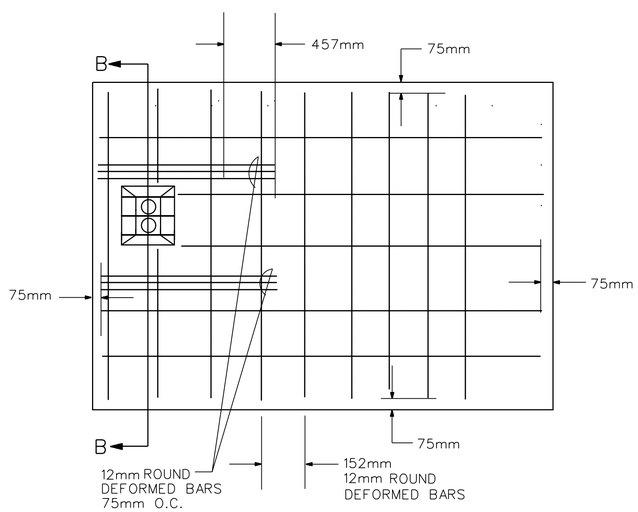

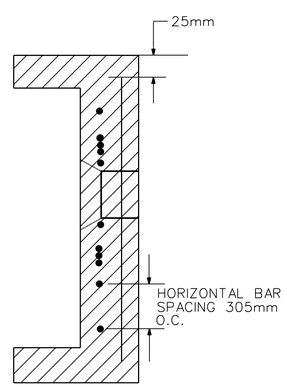

SECTION B-B

N.T.S.

TYPICAL ROOF REINFORCEMENT TYPE J MANHOLE

NOT TO SCALE

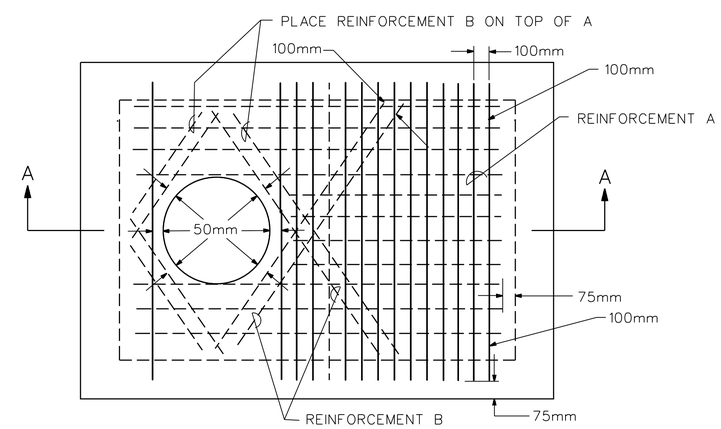

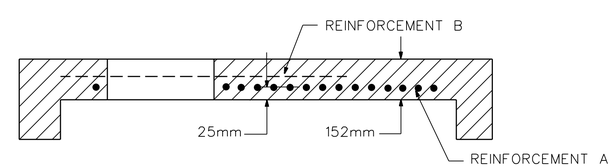

NOTE:

REINFORCEMENT TO CONSIST OF 12mm ROUND DEFORMED BARS.

SECTION A-A

N.T.S.

US ARMY CORPS OF ENGINEERS AFGHANISTAN ENGINEER DISTRICT

SYMBOL	DESCRIPTION	DATE	APPR.	SYMBOL	DESCRIPTION	DATE	APPR.

DESIGNED BY: DWN BY: CKD BY: REVIEWED BY: SUBMITTED BY: DATE: XX-XX-XX DESIGN FILE NO. DRAWING CODE: FILE NAME: PLOT SCALE: PLOT DATE: XX-XX-XX REV. —

U.S. ARMY ENGINEER DISTRICT, AFGHANISTAN CORPS OF ENGINEERS APO AE 96338

ENGINEERING AND CONSTRUCTION DIVISION

PROJECT NO.XXXX
PROJECT TITLE
INSTALLATION NAME

DRAWING TITLE

SHEET REFERENCE NUMBER:

X-XXX

SHEET — OF —

A1 Size 594mm x 841mm

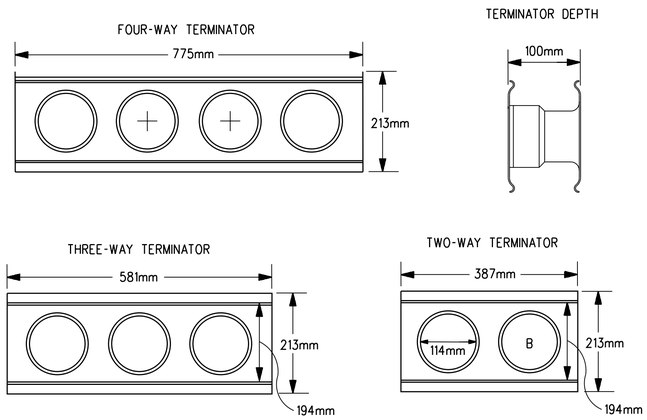

GENERAL NOTES:

1. TERMINATORS SHALL BE CONNECTED ("INTERLOCKED") TO FORM PANELS AS REQUIRED BY DUCT CONFIGURATION.
2. REINFORCING BARS WILL BE INSTALLED BETWEEN THE TERMINATORS.
3. DUCT TERMINATORS WILL BE SIZED FOR 114mm OUTER DIAMETER (4.5 INCH OD).

DUCT TERMINATORS

NOT TO SCALE

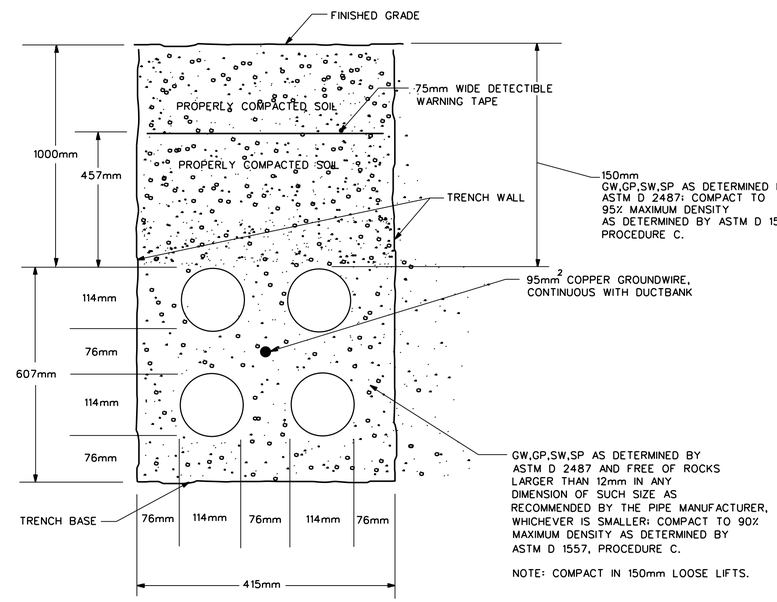

DIRECT BURRIED DUCTBANK

NOT TO SCALE

US ARMY CORPS OF ENGINEERS AFGHANISTAN ENGINEER DISTRICT

SYMBOL	DESCRIPTION	DATE	APPR.	SYMBOL	DESCRIPTION	DATE	APPR.

DESIGNED BY: DATE: XX-XX-XX REV. ___
DWN BY: CKD BY: DESIGN FILE NO.
REVIEWED BY: DRAWING CODE:
SUBMITTED BY: FILE NAME: PLOT SCALE: PLOT DATE: XX-XX-XX

U.S. ARMY ENGINEER DISTRICT, AFGHANISTAN
CORPS OF ENGINEERS
APO AE 96338

ENGINEERING AND CONSTRUCTION DIVISION

PROJECT NO XXXX
PROJECT TITLE
INSTALLATION NAME

DRAWING TITLE

SHEET REFERENCE NUMBER:
X-XXX
SHEET — OF —

A1 Size 594mm x 841mm

PROCEDURES FOR BRINGING MATERIAL ONTO BASE

1. The Contractor needs to provide the Corps with the following information prior to bringing materials onto base:

    a. Date materials / tools / equipment are to be delivered to base

    b. A precise list of materials / tools / equipment the Contractor is delivering to base

    c. Driver name(s) of delivery trucks / equipment

    d. Information on delivery trucks / equipment, i.e. make, model, license plate, number, picture, etc …

    e. Tazkera numbers of driver(s)

2. Once this information is provided to the Corps, preferably three days in advance, Commander Davis, COMKAF Security Officer, has to sign off on it. Once it has been approved, four copies will be made. Keep the original one on-file.

3. If the Contractor plans on bringing in materials / tools / equipment for an extended time-period, i.e. one or two weeks, a letter can cover the time-period as long as, all materials / tools / equipment and associated dates are known, the driver(s) do not change and the delivery vehicles do not change.

4. The ECP-3 commander can sign off on letters if the Contractor plans on hand-carrying in samples, tools, etc …

5. Before Contractor plans on bringing in materials / tools / equipment through ECP-3, either via hand-carrying or delivery truck, they need to have one of the signed, original letters in their possession.

6. Every time a Contractor wants to bring materials / tools / equipment on-base, they need a letter.

7. When a Contractor wants to bring materials / tools / equipment off-base, they will also need a letter, which follows the same procedures above.

Kandahar Air Field (KAF) Policy for Escorting Privileges and Badging

Effective 10 December 2008, temporary badges will no longer be issued to Local Nationals (LNs) to work on base. If a LN wants to work on base, they must go through the vetting process. If they are granted either RED or YELLOW Badges, they will need to be escorted.

For Military and Civilians to get escort privileges for LNs on KAF, they must first attend the Escort Training Class held every Sunday at 1030 hours at Chai House, located across the ECP-3 parking area. The class is ½ hour long and is limited to 30 persons, so first come, first serve. After taking the course, the badge will be ready for pick-up at ECP-3 in approximately a week's time. After receiving the badge, both Military and Civilians will be allowed to escort up to five combined RED and YELLOW Badged workers.

For LNs to get "Trusted Agent" status and thus, be able to escort fellow LNs on base, they will need to meet the following requirements:

1. Must currently hold a GREEN Unescorted Badge
2. Must speak conversational English, fluently
3. Must have worked 2 consecutive years on KAF (Documentation required)

If a LN meets these requirements, they must attend the Escort Training Class before they will be allowed to escort up to three combined RED and YELLOW Badged workers.

One way a LN can gain base access and not have to be escorted is to apply and receive a GREEN Badge. In order to receive one, they will need to meet the following requirements:

1. Must speak conversational English, fluently
2. Must have held a RED or YELLOW badge for the past six (6) months
3. Must not have any derogatory information on their records

Below is a general summary of the escort restrictions and LN badge restrictions:

	Escort Restrictions
Military	Up to 5 combined RED or YELLOW Badged Workers
Civilians	Up to 5 combined RED or YELLOW Badged Workers
Trusted Agent	Up to 3 combined RED or YELLOW Badged Workers

Type of Badge	**LN Badge Restrictions**
Red Badge	Must be escorted at ALL times
Yellow Badge	Must be escorted at ALL times with the exception while they are at the designated job area
Green Badge	Does not have to be escorted
"Trusted Agent" Badge	Does not have to be escorted and can escort up to three combined RED and YELLOW Badge holders

KAF Badge Request Form – This is the form LNs must fill out to begin the badging process. After all correct information is inputted, return the form to ECP-3. After they have had enough time to review, they will call the Authorized Requestor to set up an appointment with the Applicant. **(NOTE: "KAF Registration Number" refers to contract registration number given from J1 Contracting. In order to obtain this, fill out the Contract Registration Form)**

COMKAF Force Protection Screening Cell Badge Application Checklist – Along with each badge request form, the Authorized Requestor should fill out this form to show the Applicant meets the requested badge requirements.

Memorandum Letter – The Authorized Requestor needs to fill out this memo as to justify why the LN should receive their requesting badging.

Contract Registration Form – Along with this form, provide J1 Contracting with a copy of the contract, typically the first few pages. J1 is located at COMKAF Headquarters and is open Mondays through Fridays, 1000 – 1200 hours.

Copy of Full-Size Tazkera – This shall be submitted with badge application along with other documentation below, excluding Contract Registration Form.

KAF BADGE REQUEST FORM

BADGE SCREENING OFFICE ISAF / TCN PRE-SCREENING CERTIFICATION	IRIS/BATS: YES NO	FPSC INITIALS _____ DATE _____
ISAF / LEP (CIRCLE ONE)	* INITIAL SCREEN / RE-SCREEN	ADMIN. CHANGE
	* Employee has NEVER had a badge on KAF *or* anywhere in Afghanistan (CIRCLE ONE)	

PPLICANT NAME:	LAST NAME, FIRST M.I. SIGNATURE DATE			
PP# or TAZKARA:		EMPLOYEE# (IF KNOWN):		
LANGUAGES SPOKEN		NATIONALITY		
DATE OF REQUEST		RESIDE ON BASE	YES	NO
EMPLOYER: (unit, contractor)				
	TELEPHONE No. / EMAIL ADDRESS	KAF REGISTRATION NUMBER		
EMPLOYEE JOB TITLE:				
AUTHORIZED REQUESTOR:	LAST NAME, FIRST M.I. SIGNATURE DATE			
ACCESS LEVEL REQUESTED	TRUSTED AGENT	UNESCORTED	WORK AREA ONLY	ESCORTED
	(CIRCLE ONE)			

PRIVILEGES REQUESTED (CIRCLE ONE)					
POV	YES	NO	CELL PHONE	YES	NO
COV	YES	NO	LAPTOP	YES	NO
USB	YES	NO	CAMERA	YES	NO
RADIO	YES	NO			
NOTES:					
FPSC:	Rank, LAST NAME, FIRST M.I. SIGNATURE DATE				

APPLICANT FULL NAME:		COMPANY	
TAZKARA# PASSPORT#		VISA EXP or BK / PG / REG	

NATIONALITY:		ETHNICITY:		TRIBE	
LANGUAGES: (PRIMARY FIRST)	PASHTO DARI URDU ENGLISH	CELL #			
RELIGION:	SUNNI - SHIITE - OTHER	EDUCATION:	YEARS DEGREE	MARRIED:	YES - NO

COUNTRY OF BIRTH:		DISTRICT:		DOB	
PROVINCE:		CITY / VILLAGE:			

PRESENT ADDRESS:						
	COUNTRY	PROVINCE	DISTRICT	VILLAGE	FROM	UNTIL
PREVIOUSLY LIVED:						
	COUNTRY	PROVINCE	DISTRICT	VILLAGE	FROM	UNTIL
PREVIOUSLY LIVED:						
	COUNTRY	PROVINCE	DISTRICT	VILLAGE	FROM	UNTIL

PRESENT JOB						
	EMPLOYER	JOB TITLE	SUPERVISOR	Country/City	FROM	UNTIL
PREVIOUS JOB						
	EMPLOYER	JOB TITLE	SUPERVISOR	Country/City	FROM	UNTIL
PREVIOUS JOB						
	EMPLOYER	JOB TITLE	SUPERVISOR	Country/City	FROM	UNTIL

FAMILY FATHER:					
	FULL NAME	DOB	AGE	LIVES WHERE?	JOB
OTHER FAMILY MEMBERS					
	FULL NAME	DOB	AGE	LIVES WHERE?	JOB
OTHER FAMILY MEMBERS					
	FULL NAME	DOB	AGE	LIVES WHERE?	JOB
OTHER FAMILY MEMBERS					
	FULL NAME	DOB	AGE	LIVES WHERE?	JOB
OTHER FAMILY MEMBERS					
	FULL NAME	DOB	AGE	LIVES WHERE?	JOB

Military Service: Yes No

Driver's License: Yes No and Number:_____

NOTE: **Current as of:_____**

COMKAF FORCE PROTECTION SCREENING CELL
BADGE APPLICATION CHECKLIST

EMPLOYER (UNIT/COMPANY)		
	TELEPHONE No. / EMAIL ADDRESS:	KAF REGISTRATION No.
PREV. EMPLOYER (UNIT/COMPANY)		
	TELEPHONE No. / EMAIL ADDRESS:	TERMINATION DATE:
APPLICANT NAME	LAST NAME, FIRST M.I.	PASSPORT/TAZKERIA No.
	NATIONALITY:	SPOKEN LANGUAGES:

BADGE REQUESTED	ISAF	TCN	LEP
	(CIRCLE ONE)		

GENERAL REQUIREMENTS	(CHECK ONE) YES	NO	N/A
Is the IBRF-B Badge Request Form completed, signed and attached?			
Is the justification letter completed, signed and attached?			
Are the privileges and access level requested justified in the letter?			
Is the Biographic Datasheet completed and attached?			
Does the applicants original Tazkera have a recent likeness photo (no more than 5 years old)?			
Does the applicants Tazkera have all authenticating stamps and signature or thumb print?			
Does the applicant have a valid passport/visa for entry into Afghanistan?			
If driving privileges are requested, is a copy of their current drivers license attached?			
If POV (personally-owned vehicle) is requested, is there a separate justification letter (signed by an O-5 or above)?			

	ACCESS LEVEL REQUIREMENTS	(CHECK ONE) YES	NO	N/A
TRUSTED AGENT	Does the applicant currently hold a green Unescorted badge?			
	Does the applicant speak conversational English?			
	Does the applicant have 2 consecutive years documented time working on KAF?			
UNESCORTED	Does the applicant speak conversational English?			
	Has the applicant currently held a red or yellow badge for the past 6 months?			
	Does the applicant have any derogatory information on record?			
WORK AREA ONLY	Are the primary and secondary work areas listed in the justification letter and ID Request Form?(For both LEP and TCN Badges)			
AUTHORIZED REQUESTER	LAST NAME, FIRST M.I. SIGNATURE DATE			

[COMPANY LETTERHEAD]

[Company Routing Symbol or File Name]
[KAF Registration Number]

[date]

MEMORANDUM FOR DCOM, FORCE PROTECTION WING

TO: Security Officer, Kandahar Airfield

THRU: Contracting Officer [or TRCO, or other control officer], [National Contingent]
[address on KAF]

SUBJECT: Letter of Justification

REF: COMKAF SOP 379 : KAF Badging Policy & Procedures

1. Per instructions contained in Section VIII, Para. 4.a.(4), of the reference, [employee name], [Tazkara or passport no.], is employed with this [company name] as a/an [job title]. His duties are to [describe in detail functions to justify Unescorted or Work Area access.]

2. He is required by contract to hold or use the following items in order to perform his duties.:

Privately-owned vehicle (POV)	(Specify why member requires the following items)
Company-owned vehicle (COV)	
USB flash drive	
Two-way radio	
Cellphone	
Camera	
Laptop	

3. The point of contact for this letter of authorization is the undersigned.

[sample signature]

[FULL NAME] (Authorized Requestor)
[title of senior company representative]
[Afghanistan city address]

COMKAF
Contractors Registration Form

KAF Registration Number (Assigned by COMKAF)

Name company			
Name principal		**Employees on KAF (total/local/foreign)**	/ /
Nation of registration		**Date of last base in brief:**	
Duration contract		**Principal**	
Contract expiry date		**Foremen**	
Renewal date		**Augmentees**	
Contract sponsor			
Nation embedded with			

Contact information

	Phone	Cell phone	E-mail
Principal			
Alternate			
Logistics/Engineering			
Sponsor			

Vehicles

Type and numbers
/
/
/
/
/
/

Sample Window Plate

Company Name	/ Jones Concrete
Registration Number	/ Reg # 0001
Vehicle Number	/ Veh # .1234

Heavy machinery

Type and numbers	Type and numbers
/	/
/	/
/	/
/	/
/	/
/	/
/	/
/	/
/	/
/	/
/	/

Logistic Arrangements

Medical	
Feeding	
Ablutions	
Water	
Electric	
Laundry	
Waste Disposal	

Accommodations

Style	Location

Projects (description and location)

Sub-contracted companies

Name company	Number of employees	Nation

For assistance in completing this form contact:
COMKAF J1 Services Office located in Room 11 at TLS Building
or by calling 685-1118 or 685-1117

NOTE: IF THERE ARE ANY CHANGES IN THE DATA ABOVE PLEASE INFORM COMKAF IMMEDIATELY