US Army Corps
of Engineers
Afghanistan Engineer District

FACILITIES OF HIGHER EDUCATION

Funded and directed by:
United States Agency for International
Development (USAID)
The Afghanistan Ministry of Higher Education

Kunduz
Design/Build
Project Specifications
and Drawings

April 2009

THIS IS A SINGLE-PHASE REQUEST FOR PROPOSAL

TABLE OF CONTENTS

DESIGN BUILD SPECIFICATIONS
FOR
Facilties of Higher Education at Kunduz,
Afghanistan

SOLICITATION, OFFER, AND AWARD *(Construction, Alteration, or Repair)*	1. SOLICITATION NO. W917PM-09-R-0061	2. TYPE OF SOLICITATION [ ] SEALED BID (IFB) [X] NEGOTIATED *(RFP)*	3. DATE ISSUED 01-May-2009	PAGE OF PAGES 3 OF 257

IMPORTANT - The "offer" section on the reverse must be fully completed by offeror.

4. CONTRACT NO.	5. REQUISITION/PURCHASE REQUEST NO. W26WKS90971055	6. PROJECT NO.

7. ISSUED BY CODE W917PM	8. ADDRESS OFFER TO *(If Other Than Item 7)* CODE
AFGHANISTAN ENGINEER DISTRICT US ARMY CORPS OF ENGINEERS KABU APO AE 09356 TEL: FAX:	**See Item** TEL: FAX:

9. FOR INFORMATION CALL:	A. NAME DEMETRIA CHUNN	B. TELEPHONE NO. *(Include area code)* *(NO COLLECT CALLS)*

SOLICITATION

NOTE: In sealed bid solicitations "offer" and "offeror" mean "bid" and "bidder".

10. THE GOVERNMENT REQUIRES PERFORMANCE OF THE WORK DESCRIBED IN THESE DOCUMENTS *(Title, identifying no., date):*

This project consists of the design and construction of a Facility of Higher Education (FoHE) facilities for the Ministry of Higher Education to instruct trainers of teachers, instruct teachers at the provincial level, and provide continuing education in order to upgrade teacher qualifications and standardize certification levels of teachers nationwide in Afghanistan. Design drawings, included as part of this solicitation package, are to be followed by the contractor, but shall not limit the contractor in design efforts. Faculties of Higher Education building shall be constructed within the Afghanistan provinces on property owned by Provincial Department of Higher Education.

The approximate building size will be 1800SM and house 400 personnel in classrooms designed for 40 students.
The magnitude of this procurement in terms of price is between $1,000,000 and $5,000,000 Dollars

The NAICS Code for this procurement is 236220. This procurement is contingent upon the availability of funds.

The POC for this solicitation is Demetria Chunn, Contract Specialist, email: demetria.chunn@usace.army.mil

11. The Contractor shall begin performance within 10 calendar days and complete it within 365 calendar days after receiving
[ ] award, [X] notice to proceed. This performance period is [X] mandatory, [ ] negotiable. *(See* 52.211-10 *.)*

12 A. THE CONTRACTOR MUST FURNISH ANY REQUIRED PERFORMANCE AND PAYMENT BONDS? *(If "YES," indicate within how many calendar days after award in Item 12B.)* [ ] YES [X] NO	12B. CALENDAR DAYS

13. ADDITIONAL SOLICITATION REQUIREMENTS:

A. Sealed offers in original and 2 copies to perform the work required are due at the place specified in Item 8 by 05:00 PM *(hour)* local time 22 May 2009 *(date).* If this is a sealed bid solicitation, offers must be publicly opened at that time. Sealed envelopes containing offers shall be marked to show the offeror's name and address, the solicitation number, and the date and time offers are due.

B. An offer guarantee [ ] is, [X] is not required.

C. All offers are subject to the (1) work requirements, and (2) other provisions and clauses incorporated in the solicitation in full text or by reference.

D. Offers providing less than 120 calendar days for Government acceptance after the date offers are due will not be considered and will be rejected.

SOLICITATION, OFFER, AND AWARD (Continued)

(Construction, Alteration, or Repair)

OFFER ***(Must be fully completed by offeror)***

14. NAME AND ADDRESS OF OFFEROR *(Include ZIP Code)*	15. TELEPHONE NO. *(Include area code)*
	16. REMITTANCE ADDRESS *(Include only if different than Item 14)* **See Item 14**
CODE / FACILITY CODE	

17. The offeror agrees to perform the work required at the prices specified below in strict accordance with the terms of this solicitation, if this offer is accepted by the Government in writing within _____ calendar days after the date offers are due. *(Insert any number equal to or greater than the minimum requirements stated in Item 13D. Failure to insert any number means the offeror accepts the minimum in Item 13D.)*

AMOUNTS	SEE SCHEDULE OF PRICES

18. The offeror agrees to furnish any required performance and payment bonds.

19. ACKNOWLEDGMENT OF AMENDMENTS

(The offeror acknowledges receipt of amendments to the solicitation -- give number and date of each)

AMENDMENT NO.										
DATE										

20A. NAME AND TITLE OF PERSON AUTHORIZED TO SIGN OFFER *(Type or print)*	20B. SIGNATURE	20C. OFFER DATE

AWARD ***(To be completed by Government)***

21. ITEMS ACCEPTED:

22. AMOUNT	23. ACCOUNTING AND APPROPRIATION DATA

24. SUBMIT INVOICES TO ADDRESS SHOWN IN *(4 copies unless otherwise specified)*	**ITEM**	25. OTHER THAN FULL AND OPEN COMPETITION PURSUANT TO ☐ 10 U.S.C. 2304(c) ☐ 41 U.S.C. 253(c)
26. ADMINISTERED BY CODE		27. PAYMENT WILL BE MADE BY: CODE

CONTRACTING OFFICER WILL COMPLETE ITEM 28 OR 29 AS APPLICABLE

☐ 28. NEGOTIATED AGREEMENT *(Contractor is required to sign this document and return _ _ copies to issuing office.)* Contractor agrees to furnish and deliver all items or perform all work, requisitions identified on this form and any continuation sheets for the consideration stated in this contract. The rights and obligations of the parties to this contract shall be governed by (a) this contract award, (b) the solicitation, and (c) the clauses, representations, certifications, and specifications or incorporated by reference in or attached to this contract.

☐ 29. AWARD *(Contractor is not required to sign this document.)* Your offer on this solicitation, is hereby accepted as to the items listed. This award consummates the contract, which consists of (a) the Government solicitation and your offer, and (b) this contract award. No further contractual document is necessary.

30A. NAME AND TITLE OF CONTRACTOR OR PERSON AUTHORIZED TO SIGN *(Type or print)*		31A. NAME OF CONTRACTING OFFICER *(Type or print)* TEL: EMAIL:	
30B. SIGNATURE	30C. DATE	31B. UNITED STATES OF AMERICA BY	31C. AWARD DATE

SECTION 00010 SOLICITATION CONTRACT FORM

SECTION 00010 PROPOSAL SCHEDULE

Provide a price for all items.

KUNDUZ PROPOSAL SCHEDULE				
CLIN	**DESCRIPTION**	**QTY**	**UNIT**	**PRICE**
0001	**DBA INSURANCE**	1	LS	**$**
0002	**DESIGN**			
0002AA	SURVEY	1	LS	**$**
0002AB	DESIGN COSTS	1	LS	**$**
0002AC	AS-BUILT DRAWINGS	1	LS	**$**
	0002 SUB-TOTAL DESIGN			**$**
0003	**MOBILIZATION & DEMOBILIZATION**			
0003AA	MOBILIZATION	1	LS	**$**
0003AB	DEMOBILIZATION	1	LS	**$**
0003AC	SECURITY ESTABLISHMENT AND SUSTAINMENT	1	LS	**$**
	0003 SUB-TOTAL MOBILIZATION & DEMOBILIZATION			**$**
0004	**CONSTRUCTION**			
0004AA	EDUCATION BUILDING 1,402 M^2	1	LS	**$**
0004AB	SEWAGE TREATMENT SYSTEM (INCLUDING COLLECTION AND TREATMENT SYSTEM ON SITE)	1	LS	**$**
0004AC	WATER SYSTEM (WELL HOUSE, WELL, WATER TREATMENT SYSTEM AND WATER DISTRIBUTION)	1	LS	**$**

0004AD	SITE ELECTRICAL DISTRIBUTION SYSTEM	1	LS	**$**
0004AE	EXTERIOR HANDICAP RAMP TO SECOND FLOOR	1	LS	**$**
0004 SUB-TOTAL CONSTRUCTION				**$**

0005 OPTIONS				
0005AA	UXO/MINE REMOVAL	1	LS	**$**
0005AB	POWER GENERATION SYSTEM (GENERATOR SETS AND DISTRIBUTION SYSTEM)	1	LS	**$**
0005AC	ADDITIONAL 6M X 18M STRUCTURAL BAY WITH FOUR (4) CLASSROOMS [TWO (2) CLASSROOMS ON EACH FLOOR 216 M^2 TOTAL ADDITIONAL FLOOR SPACE].	1	LS	**$**
0005AD	STANDING SEAM METAL ROOF	1	LS	**$**
0005 SUB-TOTAL OPTIONS				**$**
TOTAL KUNDUZ BASE PROPOSAL (CLINS 0001 + 0002 + 0003 + 0004)				**$**
TOTAL KUNDUZ PROPOSAL INCLUDING OPTIONS (CLINS 0001 + 0002 + 0003 + 0004 + 0005)				**$**

PROPOSAL NOTES

1. PROPOSAL SCHEDULE: The Contractor shall provide a price for all items, including those labeled, "Options." The Government will evaluate the Contractor's entire proposal to determine which proposal provides the lowest price and is otherwise technically acceptable in all factors and that firm will be selected for award. See schedule at the end of this section.

2. Only one contract for the entire schedule will be awarded under this solicitation. This project will be awarded as a firm fixed price contract. This project will be awarded as a lump sum contract. This Proposal Schedule is an accounting tool for allocating funds to applicable budget.

3. All costs associated with this project (i.e., security, insurance, structures, etc.) shall be included in the line items in the bidding schedule.

4. The option items may be exercised anytime after contract award as long as the contractor is given a 60 days' notice of the Government's desire to exercise the option before the end of the base contract. The Option may be exercised unilaterally within 30 days of the end of the base contract. If the Government exercises the option with less than 30 days remaining on the base contract then the action must be bilateral.

5. Numerical annotations on the Proposal Schedule will reflect Western standards of punctuation,,,i.e…One Million Dollars is represented by the figure $1,000,000.00. Fifty Thousand Dollars is $50,000.00. Forty Eight Thousand, Three Hundred Thirty two Dollars and 12 Cents is represented as $48,332.32.

SECTION 00110 PROPOSAL PREPARATION

1. INQUIRIES

Perspective offerors should submit inquiries related to this solicitation by writing or calling the following (collect calls will not be accepted):

All questions will be submitted in writing by letter or e-mail to:

U.S. Army Corps of Engineers (USACE)
Afghanistan Engineer District (AED)
Qalaa House, Attention:
Ms. Demetria Chunn, Contract Specialist
Kabul, Afghanistan

E-MAIL ADDRESS: demetria.chunn@usace.army.mil

Please include the solicitation number, and project title with your questions. Written inquiries must be received by this office not later than 10 calendar days prior to the date set for receipt of offers.

Oral explanations or instructions are not binding. Any information given to an offeror which impacts the solicitation and/or offer will be given in the form of a written amendment to the solicitation.

As this is a competitive negotiation acquisition, there is no public bid opening and no information will be given out as to the number of offerors or the results of the competition until all awards are made.

2. DIRECTIONS FOR SUBMITTING PROPOSALS

Offers must be in sealed envelopes/packages, marked and addressed as follows:

MARK PACKAGES:
Solicitation Number: W917PM-09-R-0061
Offer Closing Date: 22 MAY 2009
Offer Closing Time: 5 p.m. Kabul Time
(LOCAL KABUL TIME)

ADDRESS PACKAGES TO:
U.S. Army Corps of Engineers (USACE)
Afghanistan Engineer District (AED)
Qalaa House, Attention: Demetria Chunn
Kabul, Afghanistan

Special Instruction Pertaining to Hand Carried Offers: Hand-carried offers must be delivered to the USACE AED offices, Qalaa House, Kabul, Afghanistan. Offerors who desire to hand-deliver their offers must notify the Contract Specialist **in advance** in order to be met at the entrance gate to Qalaa House Compound.

3. PREPROPOSAL CONFERENCE / SITE VISIT

No Pre-Proposal Conference/Site-Visit is set for this acquisition at this time. If a Pre-Proposal Conference/Site-Visit is scheduled it will be announced by Solicitation Amendment.

IMPORTANT NOTES-(1) Remarks and explanations addressed during the conference shall not qualify or alter the terms and conditions of the solicitation. (2) The terms and conditions of the solicitation remain unchanged unless the solicitation is formally amended in writing.

4. TELEGRAPHIC OFFERS - - TELEGRAPHIC OFFERS ARE NOT ACCEPTABLE.

However, offers may be withdrawn by written or telegraphic notice. Any telegram to withdraw an offer sent to this office must be received in the office designated in the Request for Proposal (RFP) for receipt of offers not later than the exact date and time set for receipt of proposals. A telegraphic withdrawal of an offer received in such office by telephone from the receiving telegraph office not later than the exact date and time set for receipt of proposals shall be considered. However, the telephone message shall be confirmed by the telegraph company by sending a copy of the written telegram that formed the basis for the telephone call. The written telegram shall be sealed in an envelope by a proper official and sent to the office designated in the RFP for receipt of offers. The official shall write on the envelope (1) the date and time of receipt and by whom, and (2) the number of the RFP, and shall sign the envelope. The offeror is responsible to inform the telegraph company of these requirements. No one from this office will be dispatched to the local telegraph office to pick up any telegram for any reason.

5. FACSIMILE OFFERS

Facsimile offers, modifications thereto, or cancellations of offers will not be accepted.

Facsimile and email responses to acknowledge Solicitation Amendments are not allowed. Only hard copy acknowledgements of amendments are permitted.

6. PROPOSAL SUBMISSION REQUIREMENTS AND INSTRUCTIONS

a. REQUIREMENT FOR SEPARATE PRICE AND TECHNICAL PROPOSALS.

(1) Each Offeror must submit both a Price Proposal and a Technical Proposal. The Price Proposal and the Technical Proposal must be submitted as separate volumes. Ensure that the outside of each separate volume is clearly marked to indicate its contents; and the identity of the offeror. Additionally, clearly identify the “original” cost/price proposal and the “original” technical proposal on the outside cover.

(2) Both the Price Proposal and the Technical Proposal must be received by the closing date and time set for receipt of proposals.

(3) No dollar amounts from the Price Proposal are to be included in the Technical Proposal.

(4) All information intended to be evaluated as part of the Technical Proposal must be submitted as part of the Technical Proposal. Do not merely cross-reference similar material in the Price Proposal, or vice versa. Also, do not include links to websites in lieu of incorporating information into your proposal.

(5) Do not include exceptions to the terms and conditions of the solicitation in either the technical or price proposal. Should the offer include any standard company terms and conditions that conflict with the terms and conditions of the solicitation, the offer may be determined "unacceptable" and thus ineligible for award. Should the offeror have any questions related to specific terms and conditions, these should be resolved prior to submission of the offer. Notwithstanding the above, the Offeror must clearly describe in the Proposal Cover Sheet submitted with the Price Proposal any exceptions to the contractual and/or technical terms and conditions of the solicitation contained in the Offer.

b. DISCUSSIONS. The Government **does not** intend to enter into discussions with offerors prior to determining those contractors within the competitive range, in accordance with FAR 52.215-1, Instructions to Offerors—Competitive Acquisitions, Alternate I. However, the Government retains the right to engage in discussions if it is in the Government’s best interest.

c. COST OR PRICING DATA. Offerors are not required to submit Cost or Pricing Data with their offers.

d. GENERAL INSTRUCTIONS.

(1) Submit only the hard-copy paper documents unless electronic files are specifically authorized and/or required elsewhere in this section. Do not submit excess information, to include audio-visual materials, electronic media, etc. Do not submit Compact Discs (CDs).

(2) Use only 8 ½ by 11 inch paper for hard copy submissions, unless another paper size is specifically authorized elsewhere in this section for a particular submission. Do not use fold-outs (e.g., 11" x 14" or 11" x 17" sheets) unless specifically authorized in this section for a particular submission. Do not use a font size smaller than 10, an unusual font style such as script, or condensed print for any submission. All page margins must be at least 1 inch wide, but may include headers and footers.

(3) The preferred method for assembling your proposals is to use three-ring binders; however, the use of pressboard or other report covers with compression or other type fasteners is acceptable. Do not use spring clamps or exceed the recommended capacity of the fastener or binder. **Do not use plastic multi-hole/spiral binding systems, heat binding systems, or other systems which do not facilitate the ready insertion of additional pages.**

(4) "Confidential" projects cannot be submitted to demonstrate capability unless all of the information required for evaluation as specified herein can be provided to the Government as part of the Offeror's technical proposal. Offerors that include in their proposals information that they do not want disclosed to the public for any purpose, or used by the Government except for evaluation purposes, must be clearly marked in accordance with the instructions at FAR 52.215-1, "Instructions to Offerors—Competitive Acquisition", paragraph (e), "Restriction on disclosure and use of data".

(5) In the case of an Offeror that is part of a large, multi-segmented business concern, provide information directly pertaining to the specific segment of the business concern (i.e., the division, group, unit, etc.) that will perform work under the prospective contract.

(6) For submissions with page limitations, the pages will be counted as follows: One side of the paper is one page; information on both the back and front of one sheet of paper will be counted as two pages. Where authorized, fold-out pages (11" x 14" or 11" x 17") will count as one page. Pages furnished for organizational purposes only, such as a "Table of Contents" or divider tabs, are not included in the page limitation.

e. SPECIFIC INSTRUCTIONS FOR THE PRICE PROPOSAL

(1) Number of Sets of the Price Proposal. Submit the ORIGINAL and ONE additional hard copy sets of the Price Proposal.

(2) Size Restrictions and Page Limits. Use only 8 ½" x 11" pages. There are no page limits set for the price proposal. However, limit your response to information required by this solicitation. Excess information will not be considered in the Government's evaluation.

(3) Format and Contents of the Price Proposal and List of Tabs. The Price Proposal shall be appropriately labeled as such and shall be organized as indicated in the following chart. Note: If the Offeror is not required to submit any information under a listed Tab in accordance with the instructions below, that tab can be omitted. However, do not renumber the subsequent tabs.

TAB	CONTENTS OF THE PRICE PROPOSAL
#1	The Proposal Cover Sheet
#2	The SF 1442 and Acknowledgement of Amendments
#3	Section 00010, Pricing Schedule
#4	Representations, Certifications, and Other Statements of Offerors
#5	JV Agreement, if applicable.

(4) Detailed Submission Instructions for the Price Proposal

TAB 1: The proposal cover sheet is required by FAR 52.215-1(2) (c) (i)-(v) and must be submitted by all offerors. This provision, titled "Instructions to Offerors—Competitive Acquisition," and the format for the proposal cover sheet are furnished elsewhere in this section.

TAB 2: The SF 1442, Solicitation, Offer, and Award is to be completed by all Offerors and duly executed with an original signature by an official authorized to bind the company in accordance with FAR 4.102.

Any and all amendments must be acknowledged by all Offerors in accordance with the instructions on the Standard Form 30, Amendment of Solicitation.

TAB 3: Section 00010 is to be completed in its entirety by all Offerors. See Section 00010 with attached notes, for further instructions.

TAB 4: All Offerors must have electronically completed the annual representations and certifications on the "Online Representations and Certifications Application" (ORCA) website or respond with the completed representations / certifications found in the solicitation.. The offerors are responsible for ensuring that these on-line Representations and Certifications are updated as necessary to reflect changes, but at least annually to ensure that they are kept current, accurate and complete. Additionally, the offeror must also complete and return the "Representations, Certifications, and Other Statements of Offerors" included in the solicitation. If the offeror is a Joint Venture, all participants must separately complete both the ORCA Representations and Certifications.

TAB 5: If the Offeror is a Joint Venture (JV), include a copy of the JV Agreement. If a JV Agreement has not yet been finalized/approved, indicate its status. JV Agreements must clearly indicate the percentages of the JV participants, in particular the percent of the controlling party, and a clear delineation of responsibilities and authorities between the JV parties.

f. SPECIFIC INSTRUCTIONS FOR THE TECHNICAL PROPOSAL

(1) Number of Sets of the Technical Proposal. Submit the ORIGINAL and ONE (1) additional set of the written Technical Proposal, with each set separately packaged.

(2) Format and Contents of the Technical Proposal and List of Tabs. The original and all copies of the technical proposal will be appropriately labeled as such. Each set shall be organized using the tabs specified in the following chart. Note: The main tabs directly correlate to the evaluation factors identified in Section 00120.

TAB	CONTENTS OF THE TECHNICAL PROPOSAL
Factor #1	EXPERIENCE
Factor #2	PERSONNEL
Factor #3	PAST PERFORMANCE

(3) Page Limitations. See paragraphs 6.d.(2) and 6.d.(6) above for format and page count instructions. The following page limitations are established for each factor described above:

- Factor #1, Experience – Limited to 5 pages (a maximum of 5 forms)
- Factor #2, Personnel – Limited to 1 page for each resume provided
- Factor #3, Past Performance – No page limitation

Tables of content, proposal cover letters, and tabs between proposal information do not count toward any page limitations in the proposal.

(4) Detailed Submission Requirements for the Technical Proposal. The following is a detailed description of the information to be submitted under each TAB.

(i) **TAB 1: FACTOR 1, EXPERIENCE:** Demonstrate the experience of the offeror and/or proposed team, including sub-contractors, on projects same/similar to that described in the solicitation for same/similar construction work as that within this solicitation.

The Contractor shall complete a minimum of three (3), but no more than five (5), "Experience Information" forms, attached at the end of this section, in response to this factor. All blocks must be filled in and all data should be accurate, current, and complete. All projects submitted must have been underway or completed with the last 3 years. At least two (2) of the projects provided must be valued at over $500,000.00.

If any of the information required is not included in the form then the contractor will be considered non-responsive and evaluated as unacceptable.

(ii) **TAB 2: FACTOR 2, PERSONNEL**: The offeror must provide resume data for the following key personnel: Project Manager, Safety Officer, Project Architect, Senior Structual Engineer, Senior Civil Engineer, Senior Electrical Engineer, Quality Control Manager, and Construction Superintendent.

Resume information to be provided shall be limited to no more than one (1) page per person and shall include the following information as a minimum:

- Name and title
- Project assignment
- Name of firm with which associated
- Years experience with this firm and with other firms
- Education degree(s), year, specialization, if applicable
- Active professional registration, year first registered, if applicable
- Other experience and qualifications relevant to same/similar work required under this contract

All key personnel should have a degree in the field of work governed by the position they are assigned to and a minimum of five (5) years of professional experience in their field. For example, a Civil Engineer must have a degree in Civil Engineering and 5 years of professional civil engineering experience.

(iii) **TAB 3: FACTOR 3, PAST PERFORMANCE:** For the projects listed under Factor 1 – Experience, provide letters of recommendations, commendations and/or awards. The Contractor Performance Assessment Reporting System (to include ACASS, CCASS, and CPARS) will be utilized to validate past performance ratings on Department of Defense contracts, as well as any other past performance information the Government has available to evaluate a contractor's past performance.

The Government may contact references provided as part of Factor 1 – Experience for information regarding the offeror's past performance on the project and for the purposes of assessing and verifying the scope of the work performed. Offerors should provide accurate, current, and complete contact information for references provided in the project descriptions.

7. Proposal Cover Sheet

PROPOSAL COVER SHEET

1. Solicitation Number:

2. The name, address, and telephone and facsimile numbers of the Offeror (and electronic address if available):

3. A statement specifying the extent of agreement with all terms, conditions, and provisions included in the solicitation and agreement to furnish any or all items upon which prices are offered at the price set opposite each item. Statement to include any exceptions in technical or cost/price proposal or exceptions inherent in Offeror's standard terms and conditions.

4. Names, titles, and telephone and facsimile numbers (and electronic addresses if available) of persons authorized to negotiate on the Offeror's behalf with the Government in connection with this solicitation:

5. Name, title, and signature of person authorized to sign the proposal. Proposals signed by an agent shall be accompanied by evidence of that agent's authority, unless that evidence has been previously furnished to the issuing office.

8. SOURCE SELECTION USING THE LOW-PRICED, TECHNICALLY ACCEPTABLE PROCESS. An evaluation for acceptability will be performed on each proposal in accordance with FAR 15.101-2(b)(3). The proposal that provides the lowest price and is otherwise technically acceptable in all factors will be selected for award. To be considered technically acceptable, no technical factor in the proposal may be determined to be unacceptable. The failure of a proposal to meet any of the factors will result in a technically unacceptable rating and preclude award. See also Section 00120.

(End)

EXPERIENCE INFORMATION

(To be completed by Contractor)

1. Contractor: **Name:** **Address:**	**2. Contract /Task Order(TO) /Purchase Order (PO) Number:**
	3. Contract/TO/PO Dollar Value:
	4. Contract/TO /PO Status: ☐ **Active** ☐ **Complete** **Completion Date (w/ extensions):**

5. Project Title:

Location:

_____

_

6. Project Description:

7. Project Owner or Project Manager for the Client – provide:
Name:

Address:

Telephone Number and E-mail:

SECTION 00120 PROPOSAL EVALUATION

SECTION 00120
LOW-PRICED, TECHNICALLY ACCEPTABLE (LPTA)

1. ELIGIBILITY FOR CONTRACT AWARD. In accordance with the FAR, no contract shall be entered into unless the contracting officer ensures that all requirements of law, executive orders, regulations, and all other applicable procedures, including clearances and approvals, have been met. This includes the FAR requirement that no award shall be made unless the contracting officer makes an affirmative determination of responsibility. To be determined responsible, a prospective contractor must meet the general standards in FAR Part 9 and any special standards set forth in the solicitation.

2. SOURCE SELECTION USING THE LOW-PRICED, TECHNICALLY ACCEPTABLE PROCESS. An evaluation for acceptability will be performed on each proposal in accordance with FAR 15.101-2(b)(3). The proposal that provides the lowest price and is otherwise technically acceptable in all factors will be selected for award. To be considered technically acceptable, no technical factor in the proposal may be determined to be unacceptable. The failure of a proposal to meet any of the factors will result in a technically unacceptable rating and preclude award.

3. BASIS OF AWARD. Award will be made on the basis of the lowest evaluated price of proposals meeting or exceeding the acceptability standards for non-cost factors. Tradeoffs are not permitted. Proposals are evaluated for acceptability but not ranked using non-cost/price factors.

4. EVALUATION OF THE PRICE PROPOSALS

a. Price will be evaluated and considered but will not be scored or combined with other aspects of the proposal evaluation. The proposed prices will be analyzed for reasonableness. They may also be analyzed to determine whether they are realistic for the work to be performed, reflect a clear understanding of the requirements, and are consistent with the information provided by the Offeror. Additionally, all offers will be analyzed for unbalanced pricing.

b. The otherwise technically-acceptable, lowest-priced offeror may be required to confirm its price on a CLIN, element, or total price basis, and/or provide additional information in support of their price, prior to contract award at the Government's request and discretion.

5. **EVALUATION OF THE TECHNICAL PROPOSAL.** The Technical Proposal will be evaluated based on the following evaluation criteria:

a. **FACTOR 1: EXPERIENCE:** The Government will review the project experience of the offeror, including subcontractors, on projects provided in response to Section 00110, Factor 1. Offerors must meet all of the following minimum acceptability standards to receive a "GO" on this factor:

- Offeror must have at least three (3) projects that are same/similar to that of the work found in this solicitation; AND
- At least two (2) of the projects submitted must be valued at over $500,000.00, and they must have been completed, or underway, within the last 3 years.

Failure to demonstrate the minimally acceptability standards under this factor will result in a "NO GO" rating and possible elimination from further consideration for contract award.

b. **FACTOR 2: PERSONNEL:** The Government will review the resumes provided in response to Section 00110, Factor 2. Offerors must demonstrate all of the following minimum acceptability standards to receive a "GO" on this factor.

The offeror must demonstrate in all resumes that the key personnel proposed have:

- a degree in the field of work governed by the position they are assigned to; AND
- a minimum of five (5) years of professional experience in their field; AND
- experience on projects same/similar to the work in this solicitation working in the position they are assigned to under this contract.

Failure to demonstrate the minimally acceptability standards under this factor will result in a "NO GO" rating and possible elimination from further consideration for contract award.

c. **FACTOR 3: PAST PERFORMANCE:** The Government will review the letters of reference submitted by the offeror in response to Section 00110, Factor 1, and may contact points of contacts listed on the "Experience Information" forms submitted under Factor 1. Offerors must demonstrate the following minimum acceptability standards to receive a "GO" on this factor:

- All past or current references must recommend either hiring or using the offeror again for future work and/or reflect positive performance of the work requirements.

Failure to demonstrate the minimally acceptable criteria under this factor will result in a "NO GO" rating and elimination from further consideration for contract award. Offerors with no past performance information will receive a "NO GO" rating for this factor.

6. GENERAL TECHNICAL CRITERIA

a. Material omission(s) may cause the technical proposal to be rejected as unacceptable.

b. Proposals which are generic, vague, or lacking in detail may be considered unacceptable. The offeror's failure to include information that the Government has indicated should be included may result in the proposal being found deficient if inadequate detail is provided.

c. The Government cannot make award based on a deficient offer. Therefore, receipt of a "NO GO" determination of acceptability for any factor will make the offer ineligible for award, unless the Government elects to enter into discussions with that Offeror and all deficiencies are remedied in a revised proposal.

7. AGREEMENT AND RESPONSIBILITY CONSIDERATIONS

a. Other Factors: The Contracting Officer shall consider several factors in the selection process which are important, but not quantified, such as:

(1) Agreement by the offeror to all general and special contract provisions and clauses.

(2) Determination of responsibility of the contractor by the Contracting Officer in accordance with the provisions of the Federal Acquisition Regulation, Part 9.1. In order to be determined responsible, a prospective contractor must:

(a) Have adequate financial resources to perform the contract or the ability to obtain them.

(b) Be able to comply with the required or proposed delivery or performance schedule taking into consideration all existing commercial and Governmental business commitments.;

(c) Have a satisfactory performance record.

(d) Have a satisfactory record of integrity and business ethics.

(e) Have the necessary organization, experience, accounting and operational controls, and technical skills, or the ability to obtain them.

(f) Have the necessary production, construction, and technical equipment and facilities, or the ability to obtain them.

(g) Be otherwise qualified and eligible to receive an award under applicable laws and regulations.

Section 00100 Bidding Schedule/Instructions to Bidders

SECTION 00100 CLAUSES INCORPORATED BY FULL TEXT

52.214-5000 APPARENT CLERICAL MISTAKES (MAR 1995)—EFARS

(a) For the purpose of initial evaluations of bids, the following will be utilized in the resolving arithmetic discrepancies found on the face of bidding schedule as submitted by the bidder:
(1) Obviously misplaced decimal points will be corrected;
(2) Discrepancy between unit price and extended price, the unit price will govern;
(3) Apparent errors in extension of unit prices will be corrected;
(4) Apparent errors in addition of lump-sum and extended prices will be corrected.
(b) For the purpose of bid evaluation, the government will proceed on the assumption that the bidder intends his bid to be evaluated on basis of the unit prices, the totals arrived at by resolution of arithmetic discrepancies as provided above and the bid will be so reflected on the abstract of bids.
(c) These correction procedures shall not be used to resolve any ambiguity concerning which bid is low.

(End of statement)

52.215-1 INSTRUCTIONS TO OFFERORS--COMPETITIVE ACQUISITION (JAN 2004)

(a) Definitions. As used in this provision--

“Discussions” are negotiations that occur after establishment of the competitive range that may, at the Contracting Officer's discretion, result in the offeror being allowed to revise its proposal.

“In writing or written” means any worded or numbered expression which can be read, reproduced, and later communicated, and includes electronically transmitted and stored information.

“Proposal modification” is a change made to a proposal before the solicitation's closing date and time, or made in response to an amendment, or made to correct a mistake at any time before award.

“Proposal revision” is a change to a proposal made after the solicitation closing date, at the request of or as allowed by a Contracting Officer as the result of negotiations.

“Time”, if stated as a number of days, is calculated using calendar days, unless otherwise specified, and will include Saturdays, Sundays, and legal holidays. However, if the last day falls on a Saturday, Sunday, or legal holiday, then the period shall include the next working day.

(b) Amendments to solicitations. If this solicitation is amended, all terms and conditions that are not amended remain unchanged. Offerors shall acknowledge receipt of any amendment to this solicitation by the date and time specified in the amendment(s).

(c) Submission, modification, revision, and withdrawal of proposals. (1) Unless other methods (e.g., electronic commerce or facsimile) are permitted in the solicitation, proposals and modifications to proposals shall be submitted in paper media in sealed envelopes or packages (i) addressed to the office specified in the solicitation, and (ii) showing the time and date specified for receipt, the solicitation number, and the name and address of the offeror. Offerors using commercial carriers should ensure that the proposal is marked on the outermost wrapper with the information in paragraphs (c)(1)(i) and (c)(1)(ii) of this provision.

(2) The first page of the proposal must show--

(i) The solicitation number;

(ii) The name, address, and telephone and facsimile numbers of the offeror (and electronic address if available);

(iii) A statement specifying the extent of agreement with all terms, conditions, and provisions included in the solicitation and agreement to furnish any or all items upon which prices are offered at the price set opposite each item;

(iv) Names, titles, and telephone and facsimile numbers (and electronic addresses if available) of persons authorized to negotiate on the offeror's behalf with the Government in connection with this solicitation; and

(v) Name, title, and signature of person authorized to sign the proposal. Proposals signed by an agent shall be accompanied by evidence of that agent's authority, unless that evidence has been previously furnished to the issuing office.

(3) Submission, modification, or revision, of proposals.

(i) Offerors are responsible for submitting proposals, and any modifications, or revisions, so as to reach the Government office designated in the solicitation by the time specified in the solicitation. If no time is specified in the solicitation, the time for receipt is 4:30 p.m., local time, for the designated Government office on the date that proposal or revision is due.

(ii)(A) Any proposal, modification, or revision received at the Government office designated in the solicitation after the exact time specified for receipt of offers is “late” and will not be considered unless it is received before award is made, the Contracting Officer determines that accepting the late offer would not unduly delay the acquisition; and--

(1) If it was transmitted through an electronic commerce method authorized by the solicitation, it was received at the initial point of entry to the Government infrastructure not later than 5:00 p.m. one working day prior to the date specified for receipt of proposals; or

(2) There is acceptable evidence to establish that it was received at the Government installation designated for receipt of offers and was under the Government's control prior to the time set for receipt of offers; or

(3) It is the only proposal received.

(B) However, a late modification of an otherwise successful proposal that makes its terms more favorable to the Government, will be considered at any time it is received and may be accepted.

(iii) Acceptable evidence to establish the time of receipt at the Government installation includes the time/date stamp of that installation on the proposal wrapper, other documentary evidence of receipt maintained by the installation, or oral testimony or statements of Government personnel.

(iv) If an emergency or unanticipated event interrupts normal Government processes so that proposals cannot be received at the office designated for receipt of proposals by the exact time specified in the solicitation, and urgent Government requirements preclude amendment of the solicitation, the time specified for receipt of proposals will be deemed to be extended to the same time of day specified in the solicitation on the first work day on which normal Government processes resume.

(v) Proposals may be withdrawn by written notice received at any time before award. Oral proposals in response to oral solicitations may be withdrawn orally. If the solicitation authorizes facsimile proposals, proposals may be withdrawn via facsimile received at any time before award, subject to the conditions specified in the provision at 52.215-5, Facsimile Proposals. Proposals may be withdrawn in person by an offeror or an authorized representative,

if the identity of the person requesting withdrawal is established and the person signs a receipt for the proposal before award.

(4) Unless otherwise specified in the solicitation, the offeror may propose to provide any item or combination of items.

(5) Offerors shall submit proposals in response to this solicitation in English, unless otherwise permitted by the solicitation, and in U.S. dollars, unless the provision at FAR 52.225-17, Evaluation of Foreign Currency Offers, is included in the solicitation.

(6) Offerors may submit modifications to their proposals at any time before the solicitation closing date and time, and may submit modifications in response to an amendment, or to correct a mistake at any time before award.

(7) Offerors may submit revised proposals only if requested or allowed by the Contracting Officer.

(8) Proposals may be withdrawn at any time before award. Withdrawals are effective upon receipt of notice by the Contracting Officer.

(d) Offer expiration date. Proposals in response to this solicitation will be valid for the number of days specified on the solicitation cover sheet (unless a different period is proposed by the offeror).

(e) Restriction on disclosure and use of data. Offerors that include in their proposals data that they do not want disclosed to the public for any purpose, or used by the Government except for evaluation purposes, shall--

(1) Mark the title page with the following legend: This proposal includes data that shall not be disclosed outside the Government and shall not be duplicated, used, or disclosed--in whole or in part--for any purpose other than to evaluate this proposal. If, however, a contract is awarded to this offeror as a result of--or in connection with-- the submission of this data, the Government shall have the right to duplicate, use, or disclose the data to the extent provided in the resulting contract. This restriction does not limit the Government's right to use information contained in this data if it is obtained from another source without restriction. The data subject to this restriction are contained in sheets [insert numbers or other identification of sheets]; and

(2) Mark each sheet of data it wishes to restrict with the following legend: Use or disclosure of data contained on this sheet is subject to the restriction on the title page of this proposal.

(f) Contract award. (1) The Government intends to award a contract or contracts resulting from this solicitation to the responsible offeror(s) whose proposal(s) represents the best value after evaluation in accordance with the factors and subfactors in the solicitation.

(2) The Government may reject any or all proposals if such action is in the Government's interest.

(3) The Government may waive informalities and minor irregularities in proposals received.

(4) The Government intends to evaluate proposals and award a contract without discussions with offerors (except clarifications as described in FAR 15.306(a)). Therefore, the offeror's initial proposal should contain the offeror's best terms from a cost or price and technical standpoint. The Government reserves the right to conduct discussions if the Contracting Officer later determines them to be necessary. If the Contracting Officer determines that the number of proposals that would otherwise be in the competitive range exceeds the number at which an efficient competition can be conducted, the Contracting Officer may limit the number of proposals in the competitive range to the greatest number that will permit an efficient competition among the most highly rated proposals.

(5) The Government reserves the right to make an award on any item for a quantity less than the quantity offered, at the unit cost or prices offered, unless the offeror specifies otherwise in the
proposal.

(6) The Government reserves the right to make multiple awards if, after considering the additional administrative costs, it is in the Government's best interest to do so.

(7) Exchanges with offerors after receipt of a proposal do not constitute a rejection or counteroffer by the Government.

(8) The Government may determine that a proposal is unacceptable if the prices proposed are materially unbalanced between line items or subline items. Unbalanced pricing exists when, despite an acceptable total evaluated price, the price of one or more contract line items is significantly overstated or understated as indicated by the application of cost or price analysis techniques. A proposal may be rejected if the Contracting Officer determines that the lack of balance poses an unacceptable risk to the Government.

(9) If a cost realism analysis is performed, cost realism may be considered by the source selection authority in evaluating performance or schedule risk.

(10) A written award or acceptance of proposal mailed or otherwise furnished to the successful offeror within the time specified in the proposal shall result in a binding contract without further action by either party.

(11) If a post-award debriefing is given to requesting offerors, the Government shall disclose the following information, if applicable:

(i) The agency's evaluation of the significant weak or deficient factors in the debriefed offeror's offer.

(ii) The overall evaluated cost or price and technical rating of the successful and the debriefed offeror and past performance information on the debriefed offeror.

(iii) The overall ranking of all offerors, when any ranking was developed by the agency during source selection.

(iv) A summary of the rationale for award.

(v) For acquisitions of commercial items, the make and model of the item to be delivered by the successful offeror.

(vi) Reasonable responses to relevant questions posed by the debriefed offeror as to whether source-selection procedures set forth in the solicitation, applicable regulations, and other applicable authorities were followed by the agency.

(End of provision)

52.215-20 REQUIREMENTS FOR COST OR PRICING DATA OR INFORMATION OTHER THAN COST OR PRICING DATA (OCT 1997)

(a) Exceptions from cost or pricing data. (1) In lieu of submitting cost or pricing data, offerors may submit a written request for exception by submitting the information described in the following subparagraphs. The Contracting Officer may require additional supporting information, but only to the extent necessary to determine whether an exception should be granted, and whether the price is fair and reasonable.

(i) Identification of the law or regulation establishing the price offered. If the price is controlled under law by periodic rulings, reviews, or similar actions of a governmental body, attach a copy of the controlling document, unless it was previously submitted to the contracting office.

(ii) Commercial item exception. For a commercial item exception, the offeror shall submit, at a minimum, information on prices at which the same item or similar items have previously been sold in the commercial market that is adequate for evaluating the reasonableness of the price for this acquisition. Such information may include--

(A) For catalog items, a copy of or identification of the catalog and its date, or the appropriate pages for the offered items, or a statement that the catalog is on file in the buying office to which the proposal is being submitted. Provide a copy or describe current discount policies and price lists (published or unpublished), e.g., wholesale, original equipment manufacturer, or reseller. Also explain the basis of each offered price and its relationship to the established catalog price, including how the proposed price relates to the price of recent sales in quantities similar to the proposed quantities;

(B) For market-priced items, the source and date or period of the market quotation or other basis for market price, the base amount, and applicable discounts. In addition, describe the nature of the market;

(C) For items included on an active Federal Supply Service Multiple Award Schedule contract, proof that an exception has been granted for the schedule item.

(2) The offeror grants the Contracting Officer or an authorized representative the right to examine, at any time before award, books, records, documents, or other directly pertinent records to verify any request for an exception under this provision, and the reasonableness of price. For items priced using catalog or market prices, or law or regulation , access does not extend to cost or profit information or other data relevant solely to the offeror's determination of the prices to be offered in the catalog or marketplace.

(b) Requirements for cost or pricing data. If the offeror is not granted an exception from the requirement to submit cost or pricing data, the following applies:

(1) The offeror shall prepare and submit cost or pricing data and supporting attachments in accordance with Table 15-2 of FAR 15.408.

As soon as practicable after agreement on price, but before contract award (except for unpriced actions such as letter contracts), the offeror shall submit a Certificate of Current Cost or Pricing Data, as prescribed by FAR 15.406-2.

(End of provision)

52.216-1 TYPE OF CONTRACT (APR 1984)

The Government contemplates award of a Firm Fixed Price contract resulting from this solicitation.

(End of provision)

52.217-5 EVALUATION OF OPTIONS (JUL 1990)

Except when it is determined in accordance with FAR 17.206(b) not to be in the Government's best interests, the Government will evaluate offers for award purposes by adding the total price for all options to the total price for the basic requirement. Evaluation of options will not obligate the Government to exercise the option(s).

(End of provision)

52.222-22 PREVIOUS CONTRACTS AND COMPLIANCE REPORTS (FEB 1999)

The offeror represents that --

(a) ( ) It has, ( ) has not participated in a previous contract or subcontract subject to the Equal Opportunity clause of this solicitation;

(b) ( ) It has, ( ) has not, filed all required compliance reports; and

(c) Representations indicating submission of required compliance reports, signed by proposed subcontractors, will be obtained before subcontract awards.

(End of provision)

52.222-23 NOTICE OF REQUIREMENT FOR AFFIRMATIVE ACTION TO ENSURE EQUAL EMPLOYMENT OPPORTUNITY FOR CONSTRUCTION (FEB 1999)

(a) The offeror's attention is called to the Equal Opportunity clause and the Affirmative Action Compliance Requirements for Construction clause of this solicitation.

(b) The goals for minority and female participation, expressed in percentage terms for the Contractor's aggregate workforce in each trade on all construction work in the covered area, are as follows:

Goals for minority participation for each trade	Goals for female participation for each trade
Please contact the Office of Federal Contract Complaince Programs as appropriate	Please contact the Office of Federal Contract Complaince Programs as appropriate

These goals are applicable to all the Contractor's construction work performed in the covered area. If the Contractor performs construction work in a geographical area located outside of the covered area, the Contractor shall apply the goals established for the geographical area where the work is actually performed. Goals are published periodically in the Federal Register in notice form, and these notices may be obtained from any Office of Federal Contract Compliance Programs office.

(c) The Contractor's compliance with Executive Order 11246, as amended, and the regulations in 41 CFR 60-4 shall be based on (1) its implementation of the Equal Opportunity clause, (2) specific affirmative action obligations required by the clause entitled "Affirmative Action Compliance Requirements for Construction," and (3) its efforts to meet the goals. The hours of minority and female employment and training must be substantially uniform throughout the length of the contract, and in each trade. The Contractor shall make a good faith effort to employ minorities and women evenly on each of its projects. The transfer of minority or female employees or trainees from Contractor to Contractor, or from project to project, for the sole purpose of meeting the Contractor's goals shall be a violation of the contract, Executive Order 11246, as amended, and the regulations in 41 CFR 60-4. Compliance with the goals will be measured against the total work hours performed.

(d) The Contractor shall provide written notification to the Deputy Assistant Secretary for Federal Contract Compliance, U.S. Department of Labor, within 10 working days following award of any construction subcontract in excess of $10,000 at any tier for construction work under the contract resulting from this solicitation. The notification shall list the --

(1) Name, address, and telephone number of the subcontractor;

(2) Employer's identification number of the subcontractor;

(3) Estimated dollar amount of the subcontract;

(4) Estimated starting and completion dates of the subcontract; and

(5) Geographical area in which the subcontract is to be performed.

(e) As used in this Notice, and in any contract resulting from this solicitation, the "covered area" is Afghanistan.

(End of provision)

52.232-18 AVAILABILITY OF FUNDS (APR 1984)

Funds are not presently available for this contract. The Government's obligation under this contract is contingent upon the availability of appropriated funds from which payment for contract purposes can be made. No legal liability on the part of the Government for any payment may arise until funds are made available to the Contracting Officer for this contract and until the Contractor receives notice of such availability, to be confirmed in writing by the Contracting Officer.

(End of clause)

52.233-2 SERVICE OF PROTEST (SEP 2006)

(a) Protests, as defined in section 33.101 of the Federal Acquisition Regulation, that are filed directly with an agency, and copies of any protests that are filed with the Government Accountability Office (GAO), shall be served on the Contracting Officer (addressed as follows) by obtaining written and dated acknowledgment of receipt from U.S. Army Corps of Engineers, House 1, Street 1, West Wazir Akbar Khan (behind Aman High School), Kabul Afghanistan.

(b) The copy of any protest shall be received in the office designated above within one day of filing a protest with the GAO.

(End of provision)

52.252-1 SOLICITATION PROVISIONS INCORPORATED BY REFERENCE (FEB 1998)

This solicitation incorporates one or more solicitation provisions by reference, with the same force and effect as if they were given in full text. Upon request, the Contracting Officer will make their full text available. The offeror is cautioned that the listed provisions may include blocks that must be completed by the offeror and submitted with its quotation or offer. In lieu of submitting the full text of those provisions, the offeror may identify the provision by paragraph identifier and provide the appropriate information with its quotation or offer. Also, the full text of a solicitation provision may be accessed electronically at this/these address(es):

www.arnet.gov or www.farsite.hill.af.mil

(End of provision)

SECTION 00150 THE DESIGN/BUILD PROCESS

PART 1 - GENERAL

1. DESIGN/BUILD (DB) PROCESS

The facility shall be designed and built by a single DB contractor. The DB contractor may be a single firm or a team of firms that includes registered Architects and engineers either employed by or subcontracted to the DB contractor. Licensing jurisdiction of Architects and Engineers of record shall be within nations approved to bid on this work, and shall be verifiable. The DB contractor shall be the Architect/Engineer-of-Record, whether the DB contractor utilizes services of licensed architects and engineers employed by its firm or subcontracts with independent architectural and/or engineering firm(s). The DB contractor shall be solely liable for design errors and/or omissions and should be insured as the A-E firm against design errors and omissions.

Section 00555, DESIGN CONCEPT DOCUMENTS identifies project documents furnished herewith to be used as the basis for the project design and construction documents. The successful Offeror shall be required to complete the design and construction documentation, and construct the project in compliance with these completed requirements.

2. OUTLINE DESCRIPTION OF THE DB PHASE

No work can begin on any phase of the process until an authorization Letter to Commence for that phase is issued.

2.1 PROPOSAL PHASE

The Proposal Phase includes the period from the time from the issuance of the Request for Proposals (RFP) through the selection process and the final award of the DB contract.

The proposals to be submitted include a Management/Technical Proposal and a Cost/Price Proposal. The contents and organization of the proposal is described in SECTION 00110 - PROPOSAL PREPARATION. The Government will evaluate and award the DB contract to a single Offeror based upon the criteria which are outlined in SECTION 00120 - PROPOSAL EVALUATION AND CONTRACT AWARD.

2.2 DESIGN PHASE

The successful DB contractor shall develop and submit for review two submittals. The DB contractor is encouraged to develop and submit multiple cost saving proposals for innovative design alternatives.

2.2.1 The Design Phase will consist of two parts as follows:

a. Part 1 will be the basic services required to develop the first submittal which represents: 100% complete drawings and specifications for site preparation work, utility construction, paving, foundation, and structural diaphragm of all work and approximately 65% complete drawings and specifications of all other required construction documents. Part I also includes incorporating the revisions identified in the First submittal review.

After approval of the Part 1 drawings and specification submittal, the Government may issue a Letter of Authorization to commence with the Build Phase for all site and off-site utilities, clearing, grubbing, rough grading the site, demolition work, parking lot base course, foundation, and structural framing.

A pre-design meeting will be conducted to distribute as-built drawings to the DB contractor, finalize and clarify technical information, and clarify other necessary information.

b. Part 2 shall include all design services required to complete the second design submittal (100%). Part 2 design shall not begin until an approval of the Part 1 submittal is issued.

3. BUILD PHASE

The Build Phase will be initiated by an authorization letter.

The authorization letter will be provided separately by the Contracting Officer for each phase of the work. The Government may give the DB Contractor authorization for the Build Phase for portions of the work following review and approval of the First Design Submittal.

Weekly coordination meetings will be held at which, as a minimum, the DB Contractor's Project Manager, a representative of the Designer, the site Superintendent, and the Contractor's Quality Control Manager shall be present.

4. PROJECT SCHEDULE:

The following is a ***suggested*** internal design schedule and is subject to modification by the Offeror to suit their particular method of operation. Overall time constraints are required and cannot be changed except by contract modification. Prospective offerors shall be required to submit a complete schedule for design and construction that meets or exceeds the overall time goals of the Government for this project.

Notice to Proceed	following Award of Contract (upon written notification)
Design Phase, Part 1 – Basic Services Pre-design Meeting	within 7 days from Award of Contract
First Design Submittal Due ***(65% design submittal - site design at 100% completion level)***	within 45 days following Award of Contract
Submittal Review Conference ***(location TBD)***	within 14 days following 65 percent submittal
Authorization to Commence Design Phase Part 2	Upon approval of first design submittal
Build Phase authorization to commence site preparation, utilities, and foundation construction	Upon approval of corrected first design submittal
Design Phase, Part 2 Second Design Submittal Due ***(99% design submittal - 100% completion level for other than site work)***	45 days from Authorization for Design Phase, Part 2
Submittal Review Conference ***(location TBD)***	within 14 days following 100 percent submittal
Incorporate Changes to Submittals ***(Re-Submit for Review and Approval – 100% design submittal)***	within 14 days following review conference
Build Phase Authorization for Remainder of Work	Upon approval of Second design Submittal
Construction Duration:	

Total Design and Construction Period	365 days (performance period include design and construction phases)

Liquidated damages in the amount of $1,650.00 for every calendar day of delay shall be assessed and charged to the Contractor.

All days are in calendar days.

PART 2 - PRODUCTS (NOT APPLICABLE)

PART 3 - EXECUTION (NOT APPLICABLE)

END OF SECTION

SECTION 00555 DESIGN CONCEPT DOCUMENTS

PART 1 GENERAL

1.1 GENERAL

This section identifies documents issued with this RFP which establish the concept or basis for the project design. These requirements are minimum standards and may be exceeded by the Offeror. Deviations from these concepts and standards may be approved if considered by the Government to be in its best interests.

The extent of development of these requirements in no way relieves the successful Offeror from the responsibility of completing the design, construction documentation, and construction of the facility in conformance with applicable criteria and codes.

1.2 ENGINEERING AND DESIGN CRITERIA

General design requirements are set forth in this RFP herein. The Specifications Divisions 02 thru 16 are the primary specifications criteria for the design and construction of the project. No design criteria will be furnished by the Afghanistan Engineer District except that which may be required for design and is not available from commercial sources or from the Construction Criteria Base (CCB) or 'Techinfo' website located at http://www.wbdg.org/ccb/ . The references within CCB must be obtained by the A/E if the criteria are required or desired. All design, unless otherwise specified, shall be based on nationally recognized industry standard, criteria, and practice.

1.3 APPENDIX DOCUMENTS

See Appendices for further technical requirements, criteria and parameters that are a part of this contract.

1.4 SPECIFICATIONS

Specifications included herein shall be utilized as design criteria and minimum standards for the corresponding construction work. The successful Offeror shall develop complete construction specifications using the criteria included in these specifications.

The Government will provide Division 1 specifications sections as required, to the successful Offeror; and these sections shall be included in the final construction specifications without change. The Design Build Contractor shall furnish these specifications on electronic media for the production of construction specifications when requested. These specifications shall be submitted together with other required contractor prepared project construction documents during the Second Design Submittal of the Design Phase, Part II.

1.5 ORDER OF PRECEDENCE

In case of conflict, duplication, or overlap of design criteria specified in the documents referenced in this section, the following order of precedence shall be followed:

1. General written design requirements within RFP narrative.
2. General guidance from referenced publications herein.
3. Drawings.

1.6 MANDATORY CRITERIA

Portions of the design criteria documents provide mandatory criteria. Mandatory criteria consists of drawings, schematics, specifications, and other requirements which shall not be altered or modified for proposal submittal or subsequent final design except for minor adjustments for coordination or except for cost reduction proposals as specified in Section 00150 - THE DESIGN BUILD PROCESS. Non-mandatory criteria shall be considered minimum requirements and may be enhanced, improved, or substituted to better suit design requirements or to improve evaluation consideration. Mandatory requirements are as listed below. All other design criteria shall be considered non-mandatory.

Work Plan
Boundary survey plan
Topographic survey plan
Any mandatory criteria referenced within Project Program.
Any other criteria listed herein which is listed, shown or implied as mandatory.

1.7 ADDITIONAL DOCUMENTS/CRITERIA FURNISHED BY THE GOVERNMENT

The following documents will be furnished to the Design/Build Contractor when requested by the Offeror or Contractor:

Design Criteria published by the Government such as Technical Manuals (TM), Engineer Manuals (EM), Engineer Technical Letters (ETL) and other documents related to the design referenced herein which are not available on the Internet, including the CCB website.

Commercial design criteria and specifications will not be furnished by the Government.

Conversion of electronic media to other formats shall be the responsibility of the Design Build Contractor.

PART 2 PRODUCTS (Not Applicable)

PART 3 EXECUTION (Not Applicable)

-- End of Section --

SECTION 00600 – REPRESENTATIONS AND CERTIFICATIONS

SECTION 00600 CLAUSES INCORPORATED BY FULL TEXT

52.204-3 TAXPAYER IDENTIFICATION (OCT 1998)

(a) Definitions.

Common parent, as used in this provision, means that corporate entity that owns or controls an affiliated group of corporations that files its Federal income tax returns on a consolidated basis, and of which the offeror is a member.

Taxpayer Identification Number (TIN), as used in this provision, means the number required by the Internal Revenue Service (IRS) to be used by the offeror in reporting income tax and other returns. The TIN may be either a Social Security Number or an Employer Identification Number.

(b) All offerors must submit the information required in paragraphs (d) through (f) of this provision to comply with debt collection requirements of 31 U.S.C. 7701(c) and 3325(d), reporting requirements of 26 U.S.C. 6041, 6041A, and 6050M, and implementing regulations issued by the IRS. If the resulting contract is subject to the payment reporting requirements described in Federal Acquisition Regulation (FAR) 4.904, the failure or refusal by the offeror to furnish the information may result in a 31 percent reduction of payments otherwise due under the contract.

(c) The TIN may be used by the Government to collect and report on any delinquent amounts arising out of the offeror's relationship with the Government (31 U.S.C. 7701(c)(3)). If the resulting contract is subject to the payment reporting requirements described in FAR 4.904, the TIN provided hereunder may be matched with IRS records to verify the accuracy of the offeror's TIN.

(d) Taxpayer Identification Number (TIN).

___ TIN:.----------

___ TIN has been applied for.

___ TIN is not required because:

___ Offeror is a nonresident alien, foreign corporation, or foreign partnership that does not have income effectively connected with the conduct of a trade or business in the United States and does not have an office or place of business or a fiscal paying agent in the United States;

___ Offeror is an agency or instrumentality of a foreign government;

___ Offeror is an agency or instrumentality of the Federal Government.

(e) Type of organization.

___ Sole proprietorship;

___ Partnership;

___ Corporate entity (not tax-exempt);

___ Corporate entity (tax-exempt);

___ Government entity (Federal, State, or local);

___ Foreign government;

___ International organization per 26 CFR 1.6049-4;

___ Other----------

(f) Common parent.

___ Offeror is not owned or controlled by a common parent as defined in paragraph (a) of this provision.

___ Name and TIN of common parent:

Name----------

TIN----------

(End of provision)

52.204-8 ANNUAL REPRESENTATIONS AND CERTIFICATIONS (FEB 2009)

(a)(1) The North American Industry Classification System (NAICS) code for this acquisition is ---------- [insert NAICS code].

(2) The small business size standard is ---------- [insert size standard].

(3) The small business size standard for a concern which submits an offer in its own name, other than on a construction or service contract, but which proposes to furnish a product which it did not itself manufacture, is 500 employees.

(b)(1) If the clause at 52.204-7, Central Contractor Registration, is included in this solicitation, paragraph (d) of this provision applies.

(2) If the clause at 52.204-7 is not included in this solicitation, and the offeror is currently registered in CCR, and has completed the ORCA electronically, the offeror may choose to use paragraph (d) of this provision instead of completing the corresponding individual representations and certifications in the solicitation. The offeror shall indicate which option applies by checking one of the following boxes:

(__) Paragraph (d) applies.

(__) Paragraph (d) does not apply and the offeror has completed the individual representations and certifications in the solicitation.

(c)(1) The following representations or certifications in ORCA are applicable to this solicitation as indicated:

(i) 52.203-2, Certificate of Independent Price Determination. This provision applies to solicitations when a firm-fixed-price contract or fixed-price contract with economic price adjustment is contemplated, unless--

(A) The acquisition is to be made under the simplified acquisition procedures in Part 13;

(B) The solicitation is a request for technical proposals under two-step sealed bidding procedures; or

(C) The solicitation is for utility services for which rates are set by law or regulation.

(ii) 52.203-11, Certification and Disclosure Regarding Payments to Influence Certain Federal Transactions. This provision applies to solicitations expected to exceed $100,000.

(iii) 52.204-3, Taxpayer Identification. This provision applies to solicitations that do not include the clause at 52.204-7, Central Contractor Registration.

(iv) 52.204-5, Women-Owned Business (Other Than Small Business).This provision applies to solicitations that--

(A) Are not set aside for small business concerns;

(B) Exceed the simplified acquisition threshold; and

(C) Are for contracts that will be performed in the United States or its outlying areas.

(v) 52.209-5, Certification Regarding Responsibility Matters. This provision applies to solicitations where the contract value is expected to exceed the simplified acquisition threshold.

(vi) 52.214-14, Place of Performance--Sealed Bidding. This provision applies to invitations for bids except those in which the place of performance is specified by the Government.

(vii) 52.215-6, Place of Performance. This provision applies to solicitations unless the place of performance is specified by the Government.

(viii) 52.219-1, Small Business Program Representations (Basic & Alternate I). This provision applies to solicitations when the contract will be performed in the United States or its outlying areas.

(A) The basic provision applies when the solicitations are issued by other than DoD, NASA, and the Coast Guard.

(B) The provision with its Alternate I applies to solicitations issued by DoD, NASA, or the Coast Guard.

(ix) 52.219-2, Equal Low Bids. This provision applies to solicitations when contracting by sealed bidding and the contract will be performed in the United States or its outlying areas.

(x) 52.222-22, Previous Contracts and Compliance Reports. This provision applies to solicitations that include the clause at 52.222-26, Equal Opportunity.

(xi) 52.222-25, Affirmative Action Compliance. This provision applies to solicitations, other than those for construction, when the solicitation includes the clause at 52.222-26, Equal Opportunity.

(xii) 52.222-38, Compliance with Veterans' Employment Reporting Requirements. This provision applies to solicitations when it is anticipated the contract award will exceed the simplified acquisition threshold and the contract is not for acquisition of commercial items.

(xiii) 52.223-1, Biobased Product Certification. This provision applies to solicitations that require the delivery or specify the use of USDA-designated items; or include the clause at 52.223-2, Affirmative Procurement of Biobased Products Under Service and Construction Contracts.

(xiv) 52.223-4, Recovered Material Certification. This provision applies to solicitations that are for, or specify the use of, EPA-designated items.

(xv) 52.225-2, Buy American Act Certificate. This provision applies to solicitations containing the clause at 52.225-1.

(xvi) 52.225-4, Buy American Act--Free Trade Agreements—Israeli Trade Act Certificate. (Basic, Alternate I, and Alternate II) This provision applies to solicitations containing the clause at 52.225-3.

(A) If the acquisition value is less than $25,000, the basic provision applies.

(B) If the acquisition value is $25,000 or more but is less than $50,000, the provision with its Alternate I applies.

(C) If the acquisition value is $50,000 or more but is less than $67,826, the provision with its Alternate II applies.

(xvii) 52.225-6, Trade Agreements Certificate. This provision applies to solicitations containing the clause at 52.225-5.

(xviii) 52.225-20, Prohibition on Conducting Restricted Business Operations in Sudan--Certification.

(xix) 52.226-2, Historically Black College or University and Minority Institution Representation. This provision applies to--

(A) Solicitations for research, studies, supplies, or services of the type normally acquired from higher educational institutions; and

(B) For DoD, NASA, and Coast Guard acquisitions, solicitations that contain the clause at 52.219-23, Notice of Price Evaluation Adjustment for Small Disadvantaged Business Concerns.

(2) The following certifications are applicable as indicated by the Contracting Officer:

(Contracting Officer check as appropriate.)

----(i) 52.219-19, Small Business Concern Representation for the Small Business Competitiveness Demonstration Program.

------(ii) 52.219-21, Small Business Size Representation for Targeted Industry Categories Under the Small Business Competitiveness Demonstration Program.

------(iii) 52.219-22, Small Disadvantaged Business Status.

------(A) Basic.

------(B) Alternate I.

------(iv) 52.222-18, Certification Regarding Knowledge of Child Labor for Listed End Products.

------(v) 52.222-48, Exemption from Application of the Service Contract Act to Contracts for Maintenance, Calibration, or Repair of Certain Equipment Certification.

------(vi) 52.222-52 Exemption from Application of the Service Contract Act to Contracts for Certain Services--Certification.

------(vii) 52.223-9, with its Alternate I, Estimate of Percentage of Recovered Material Content for EPA-Designated Products (Alternate I only).

------(viii) 52.223-13, Certification of Toxic Chemical Release Reporting.

------(ix) 52.227-6, Royalty Information.

------ (A) Basic.

------ (B) Alternate I.

------(x) 52.227-15, Representation of Limited Rights Data and Restricted Computer Software.

(d) The offeror has completed the annual representations and certifications electronically via the Online Representations and Certifications Application (ORCA) website at http://orca.bpn.gov. After reviewing the ORCA database information, the offeror verifies by submission of the offer that the representations and certifications currently posted electronically that apply to this solicitation as indicated in paragraph (c) of this provision have been entered or updated within the last 12 months, are current, accurate, complete, and applicable to this solicitation (including the business size standard applicable to the NAICS code referenced for this solicitation), as of the date of this offer and are incorporated in this offer by reference (see FAR 4.1201); except for the changes identified below (offeror to insert changes, identifyingchange by clause number, title, date). These amended representation(s) and/or certification(s) are also incorporated in this offer and are current, accurate, and complete as of the date of this offer.

FAR Clause	Title	Date	Change
------	----------	------	------

Any changes provided by the offeror are applicable to this solicitation only, and do not result in an update to the representations and certifications posted on ORCA.

(End of Provision)

52.209-5 CERTIFICATION REGARDING RESPONSIBILITY MATTERS (DEC 2008)

(a)(1) The Offeror certifies, to the best of its knowledge and belief, that-

(i) The Offeror and/or any of its Principals-

(A) Are ( ) are not ( ) presently debarred, suspended, proposed for debarment, or declared ineligible for the award of contracts by any Federal agency;

(B) Have ( ) have not ( ), within a three-year period preceding this offer, been convicted of or had a civil judgment rendered against them for: commission of fraud or a criminal offense in connection with obtaining, attempting to obtain, or performing a public (Federal, state, or local) contract or subcontract; violation of Federal or state antitrust statutes relating to the submission of offers; or commission of embezzlement, theft, forgery, bribery, falsification or destruction of records, making false statements, tax evasion, violating Federal criminal tax laws, or receiving stolen property; and

(C) Are ( ) are not ( ) presently indicted for, or otherwise criminally or civilly charged by a governmental entity with, commission of any of the offenses enumerated in paragraph (a)(1)(i)(B) of this provision.; and

(D) Have [ballot], have not [ballot], within a three-year period preceding this offer, been notified of any delinquent Federal taxes in an amount that exceeds $3,000 for which the liability remains unsatisfied.

(1) Federal taxes are considered delinquent if both of the following criteria apply:

(i) The tax liability is finally determined. The liability is finally determined if it has been assessed. A liability is not finally determined if there is a pending administrative or judicial challenge. In the case of a judicial challenge to the liability, the liability is not finally determined until all judicial appeal rights have been exhausted.

(ii) The taxpayer is delinquent in making payment. A taxpayer is delinquent if the taxpayer has failed to pay the tax liability when full payment was due and required. A taxpayer is not delinquent in cases where enforced collection action is precluded.

(2) Examples. (i) The taxpayer has received a statutory notice of deficiency, under I.R.C. Sec. 6212, which entitles the taxpayer to seek Tax Court review of a proposed tax deficiency. This is not a delinquent tax because it is not a final tax liability. Should the taxpayer seek Tax Court review, this will not be a final tax liability until the taxpayer has exercised all judicial appeal rights.

(ii) The IRS has filed a notice of Federal tax lien with respect to an assessed tax liability, and the taxpayer has been issued a notice under I.R.C. Sec. 6320 entitling the taxpayer to request a hearing with the IRS Office of Appeals contesting the lien filing, and to further appeal to the Tax Court if the IRS determines to sustain the lien filing. In the course of the hearing, the taxpayer is entitled to contest the underlying tax liability because the taxpayer has had no prior opportunity to contest the liability. This is not a delinquent tax because it is not a final tax liability. Should the taxpayer seek tax court review, this will not be a final tax liability until the taxpayer has exercised all judicial appeal rights.

(iii) The taxpayer has entered into an installment agreement pursuant to I.R.C. Sec. 6159. The taxpayer is making timely payments and is in full compliance with the agreement terms. The taxpayer is not delinquent because the taxpayer is not currently required to make full payment.

(iv) The taxpayer has filed for bankruptcy protection. The taxpayer is not delinquent because enforced collection action is stayed under 11 U.S.C. 362 (the Bankruptcy Code).

(ii) The Offeror has ( ) has not ( ), within a three-year period preceding this offer, had one or more contracts terminated for default by any Federal agency.

(2) Principal, for the purposes of this certification, means an officer, director, owner, partner, or a person having primary management or supervisory responsibilities within a business entity (e.g., general manager; plant manager; head of a subsidiary, division, or business segment; and similar positions).

(b) The Offeror shall provide immediate written notice to the Contracting Officer if, at any time prior to contract award, the Offeror learns that its certification was erroneous when submitted or has become erroneous by reason of changed circumstances.

(c) A certification that any of the items in paragraph (a) of this provision exists will not necessarily result in withholding of an award under this solicitation. However, the certification will be considered in connection with a determination of the Offeror's responsibility. Failure of the Offeror to furnish a certification or provide such additional information as requested by the Contracting Officer may render the Offeror nonresponsible.

(d) Nothing contained in the foregoing shall be construed to require establishment of a system of records in order to render, in good faith, the certification required by paragraph (a) of this provision. The knowledge and information of an Offeror is not required to exceed that which is normally possessed by a prudent person in the ordinary course of business dealings.

(e) The certification in paragraph (a) of this provision is a material representation of fact upon which reliance was placed when making award. If it is later determined that the Offeror knowingly rendered an erroneous certification, in addition to other remedies available to the Government, the Contracting Officer may terminate the contract resulting from this solicitation for default.

(End of provision)

52.230-1 COST ACCOUNTING STANDARDS NOTICES AND CERTIFICATION (OCT 2008)

Note: This notice does not apply to small businesses or foreign governments. This notice is in three parts, identified by Roman numerals I through III.

Offerors shall examine each part and provide the requested information in order to determine Cost Accounting Standards (CAS) requirements applicable to any resultant contract.

If the offeror is an educational institution, Part II does not apply unless the contemplated contract will be subject to full or modified CAS coverage pursuant to 48 CFR 9903.201-2(c)(5) or 9903.201-2(c)(6), respectively.

I. DISCLOSURE STATEMENT--COST ACCOUNTING PRACTICES AND CERTIFICATION

(a) Any contract in excess of $650,000 resulting from this solicitation will be subject to the requirements of the Cost Accounting Standards Board (48 CFR Chapter 99), except for those contracts which are exempt as specified in 48 CFR 9903.201-1.

(b) Any offeror submitting a proposal which, if accepted, will result in a contract subject to the requirements of 48 CFR Chapter 99 must, as a condition of contracting, submit a Disclosure Statement as required by 48 CFR 9903.202. When required, the Disclosure Statement must be submitted as a part of the offeror's proposal under this solicitation unless the offeror has already submitted a Disclosure Statement disclosing the practices used in connection with the pricing of this proposal. If an applicable Disclosure Statement has already been submitted, the offeror may satisfy the requirement for submission by providing the information requested in paragraph (c) of Part I of this provision.

CAUTION: In the absence of specific regulations or agreement, a practice disclosed in a Disclosure Statement shall not, by virtue of such disclosure, be deemed to be a proper, approved, or agreed-to practice for pricing proposals or accumulating and reporting contract performance cost data.

(c) Check the appropriate box below:

(1) Certificate of Concurrent Submission of Disclosure Statement.

The offeror hereby certifies that, as a part of the offer, copies of the Disclosure Statement have been submitted as follows: (i) original and one copy to the cognizant Administrative Contracting Officer (ACO) or cognizant Federal agency official authorized to act in that capacity (Federal official), as applicable, and (ii) one copy to the cognizant Federal auditor.

(Disclosure must be on Form No. CASB DS-1 or CASB DS-2, as applicable. Forms may be obtained from the cognizant ACO or Federal official and/or from the loose-leaf version of the Federal Acquisition Regulation.)

Date of Disclosure Statement: _____ Name and Address of Cognizant ACO or Federal Official Where Filed: _____

The offeror further certifies that the practices used in estimating costs in pricing this proposal are consistent with the cost accounting practices disclosed in the Disclosure Statement.

(2) Certificate of Previously Submitted Disclosure Statement.

The offeror hereby certifies that the required Disclosure Statement was filed as follows:

Date of Disclosure Statement: _____ Name and Address of Cognizant ACO or Federal Official Where Filed: _____

The offeror further certifies that the practices used in estimating costs in pricing this proposal are consistent with the cost accounting practices disclosed in the applicable Disclosure Statement.

(3) Certificate of Monetary Exemption.

The offeror hereby certifies that the offeror, together with all divisions, subsidiaries, and affiliates under common control, did not receive net awards of negotiated prime contracts and subcontracts subject to CAS totaling more than $50 million (of which at least one award exceeded $1 million) in the cost accounting period immediately preceding the period in which this proposal was submitted. The offeror further certifies that if such status changes before an award resulting from this proposal, the offeror will advise the Contracting Officer immediately.

(4) Certificate of Interim Exemption.

The offeror hereby certifies that (i) the offeror first exceeded the monetary exemption for disclosure, as defined in (3) of this subsection, in the cost accounting period immediately preceding the period in which this offer was submitted and (ii) in accordance with 48 CFR 9903.202-1, the offeror is not yet required to submit a Disclosure Statement. The offeror further certifies that if an award resulting from this proposal has not been made within 90 days after the end of that period, the offeror will immediately submit a revised certificate to the Contracting Officer, in the form specified under subparagraph (c)(1) or (c)(2) of Part I of this provision, as appropriate, to verify submission of a completed Disclosure Statement.

CAUTION: Offerors currently required to disclose because they were awarded a CAS-covered prime contract or subcontract of $50 million or more in the current cost accounting period may not claim this exemption (4). Further, the exemption applies only in connection with proposals submitted before expiration of the 90-day period following the cost accounting period in which the monetary exemption was exceeded.

II. COST ACCOUNTING STANDARDS--ELIGIBILITY FOR MODIFIED CONTRACT COVERAGE

If the offeror is eligible to use the modified provisions of 48 CFR 9903.201-2(b) and elects to do so, the offeror shall indicate by checking the box below. Checking the box below shall mean that the resultant contract is subject to the Disclosure and Consistency of Cost Accounting Practices clause in lieu of the Cost Accounting Standards clause.

( ) The offeror hereby claims an exemption from the Cost Accounting Standards clause under the provisions of 48 CFR 9903.201-2(b) and certifies that the offeror is eligible for use of the Disclosure and Consistency of Cost Accounting Practices clause because during the cost accounting period immediately preceding the period in which this proposal was submitted, the offeror received less than $50 million in awards of CAS-covered prime contracts and subcontracts. The offeror further certifies that if such status changes before an award resulting from this proposal, the offeror will advise the Contracting Officer immediately.

CAUTION: An offeror may not claim the above eligibility for modified contract coverage if this proposal is expected to result in the award of a CAS-covered contract of $50 million or more or if, during its current cost accounting period, the offeror has been awarded a single CAS-covered prime contract or subcontract of $25 million or more.

III. ADDITIONAL COST ACCOUNTING STANDARDS APPLICABLE TO EXISTING CONTRACTS

The offeror shall indicate below whether award of the contemplated contract would, in accordance with subparagraph (a)(3) of the Cost Accounting Standards clause, require a change in established cost accounting practices affecting existing contracts and subcontracts.

( ) YES ( ) NO

(End of clause)

SECTION 00700 CONTRACT CLAUSES

SECTION 00700 CLAUSES INCORPORATED BY REFERENCE

52.202-1	Definitions	JUL 2004
52.203-3	Gratuities	APR 1984
52.203-5	Covenant Against Contingent Fees	APR 1984
52.203-6	Restrictions On Subcontractor Sales To The Government	SEP 2006
52.203-7	Anti-Kickback Procedures	JUL 1995
52.203-12	Limitation On Payments To Influence Certain Federal Transactions	SEP 2007
52.204-4	Printed or Copied Double-Sided on Recycled Paper	AUG 2000
52.209-6	Protecting the Government's Interest When Subcontracting With Contractors Debarred, Suspended, or Proposed for Debarment	SEP 2006
52.215-11	Price Reduction for Defective Cost or Pricing Data--Modifications	OCT 1997
52.215-13	Subcontractor Cost or Pricing Data--Modifications	OCT 1997
52.215-21	Requirements for Cost or Pricing Data or Information Other Than Cost or Pricing Data--Modifications	OCT 1997
52.222-21	Prohibition Of Segregated Facilities	FEB 1999
52.222-26	Equal Opportunity	MAR 2007
52.222-27	Affirmative Action Compliance Requirements for Construction	FEB 1999
52.222-35	Equal Opportunity For Special Disabled Veterans, Veterans of the Vietnam Era, and Other Eligible Veterans	SEP 2006
52.222-37	Employment Reports On Special Disabled Veterans, Veterans Of The Vietnam Era, and Other Eligible Veterans	SEP 2006
52.222-50	Combating Trafficking in Persons	FEB 2009
52.225-13	Restrictions on Certain Foreign Purchases	JUN 2008
52.225-14	Inconsistency Between English Version And Translation Of Contract	FEB 2000
52.227-4	Patent Indemnity-Construction Contracts	DEC 2007
52.228-3	Worker's Compensation Insurance (Defense Base Act)	APR 1984
52.229-6	Taxes--Foreign Fixed-Price Contracts	JUN 2003
52.232-5	Payments under Fixed-Price Construction Contracts	SEP 2002
52.232-17	Interest	OCT 2008
52.232-18	Availability Of Funds	APR 1984
52.232-38	Submission of Electronic Funds Transfer Information with Offer	MAY 1999
52.233-1	Disputes	JUL 2002
52.233-3	Protest After Award	AUG 1996
52.233-4	Applicable Law for Breach of Contract Claim	OCT 2004
52.236-2	Differing Site Conditions	APR 1984
52.236-5	Material and Workmanship	APR 1984
52.236-6	Superintendence by the Contractor	APR 1984
52.236-7	Permits and Responsibilities	NOV 1991
52.236-8	Other Contracts	APR 1984
52.236-9	Protection of Existing Vegetation, Structures, Equipment, Utilities, and Improvements	APR 1984
52.236-10	Operations and Storage Areas	APR 1984
52.236-11	Use and Possession Prior to Completion	APR 1984
52.236-12	Cleaning Up	APR 1984

52.236-13 Alt I	Accident Prevention (Nov 1991) - Alternate I	NOV 1991
52.236-15	Schedules for Construction Contracts	APR 1984
52.236-17	Layout of Work	APR 1984
52.236-21 Alt I	Specifications and Drawings for Construction (Feb 1997) - Alternate I	APR 1984
52.236-26	Preconstruction Conference	FEB 1995
52.236-27	Site Visit (Construction)	FEB 1995
52.242-13	Bankruptcy	JUL 1995
52.242-14	Suspension of Work	APR 1984
52.243-4	Changes	JUN 2007
52.244-5	Competition In Subcontracting	DEC 1996
52.246-21	Warranty of Construction	MAR 1994
52.247-34	F.O.B. Destination	NOV 1991
52.247-63	Preference For U.S. Flag Air Carriers	JUN 2003
52.248-3	Value Engineering-Construction	SEP 2006
52.249-2 Alt I	Termination for Convenience of the Government (Fixed-Price) (May 2004) - Alternate I	SEP 1996
52.249-10 Alt I	Default (Fixed-Price Construction) (Apr 1984) Alternate I	APR 1984
52.253-1	Computer Generated Forms	JAN 1991
252.201-7000	Contracting Officer's Representative	DEC 1991
252.203-7001	Prohibition On Persons Convicted of Fraud or Other Defense-Contract-Related Felonies	DEC 2008
252.204-7000	Disclosure Of Information	DEC 1991
252.204-7003	Control Of Government Personnel Work Product	APR 1992
252.209-7004	Subcontracting With Firms That Are Owned or Controlled By The Government of a Terrorist Country	DEC 2006
252.215-7000	Pricing Adjustments	DEC 1991
252.215-7002	Cost Estimating System Requirements	DEC 2006
252.222-7002	Compliance With Local Labor Laws (Overseas)	JUN 1997
252.223-7004	Drug Free Work Force	SEP 1988
252.225-7003	Report of Intended Performance Outside the United States and Canada--Submission with Offer	DEC 2006
252.225-7005	Identification Of Expenditures In The United States	JUN 2005
252.225-7041	Correspondence in English	JUN 1997
252.227-7013	Rights in Technical Data--Noncommercial Items	NOV 1995
252.227-7022	Government Rights (Unlimited)	MAR 1979
252.227-7023	Drawings and Other Data to become Property of Government	MAR 1979
252.227-7030	Technical Data--Withholding Of Payment	MAR 2000
252.227-7033	Rights in Shop Drawings	APR 1966
252.231-7000	Supplemental Cost Principles	DEC 1991
252.232-7003	Electronic Submission of Payment Requests and Receiving Reports	MAR 2008
252.232-7008	Assignment of Claims (Overseas)	JUN 1997
252.232-7010	Levies on Contract Payments	DEC 2006
252.233-7001	Choice of Law (Overseas)	JUN 1997
252.236-7000	Modification Proposals-Price Breakdown	DEC 1991
252.236-7001	Contract Drawings, and Specifications	AUG 2000
252.236-7008	Contract Prices-Bidding Schedules	DEC 1991
252.243-7001	Pricing Of Contract Modifications	DEC 1991
252.243-7002	Requests for Equitable Adjustment	MAR 1998
252.247-7023	Transportation of Supplies by Sea	MAY 2002
252.247-7024	Notification Of Transportation Of Supplies By Sea	MAR 2000

SECTION 00700 CLAUSES INCORPORATED BY FULL TEXT

52.215-19 NOTIFICATION OF OWNERSHIP CHANGES (OCT 1997)

(a) The Contractor shall make the following notifications in writing:

(1) When the Contractor becomes aware that a change in its ownership has occurred, or is certain to occur, that could result in changes in the valuation of its capitalized assets in the accounting records, the Contractor shall notify the Administrative Contracting Officer (ACO) within 30 days.

(2) The Contractor shall also notify the ACO within 30 days whenever changes to asset valuations or any other cost changes have occurred or are certain to occur as a result of a change in ownership.

(b) The Contractor shall--

(1) Maintain current, accurate, and complete inventory records of assets and their costs;

(2) Provide the ACO or designated representative ready access to the records upon request;

(3) Ensure that all individual and grouped assets, their capitalized values, accumulated depreciation or amortization, and remaining useful lives are identified accurately before and after each of the Contractor's ownership changes; and

(4) Retain and continue to maintain depreciation and amortization schedules based on the asset records maintained before each Contractor ownership change.

The Contractor shall include the substance of this clause in all subcontracts under this contract that meet the applicability requirement of FAR 15.408(k).

(End of clause)

52.222-29 NOTIFICATION OF VISA DENIAL (JUN 2003)

It is a violation of Executive Order 11246 for a Contractor to refuse to employ any applicant or not to assign any person hired in the United States, Puerto Rico, the Northern Mariana Islands, American Samoa, Guam, the U.S. Virgin Islands, or Wake Island, on the basis that the individual's race, color, religion, sex, or national origin is not compatible with the policies of the country where or for whom the work will be performed (41 CFR 60-1.10). The Contractor shall notify the U.S. Department of State, Assistant Secretary, Bureau of Political-Military Affairs (PM), 2201 C Street NW., Room 6212, Washington, DC 20520, and the U.S. Department of Labor, Deputy Assistant Secretary for Federal Contract Compliance, when it has knowledge of any employee or potential employee being denied an entry visa to a country where this contract will be performed, and it believes the denial is attributable to the race, color, religion, sex, or national origin of the employee or potential employee.

(End of clause)

52.232-34 PAYMENT BY ELECTRONIC FUNDS TRANSFER—OTHER THAN CENTRAL CONTRACTOR REGISTRATION (MAY 1999)

(a) Method of payment. (1) All payments by the Government under this contract shall be made by electronic funds transfer (EFT) except as provided in paragraph (a)(2) of this clause. As used in this clause, the term “EFT” refers to the funds transfer and may also include the payment information transfer.

(2) In the event the Government is unable to release one or more payments by EFT, the Contractor agrees to either--

(i) Accept payment by check or some other mutually agreeable method of payment; or

(ii) Request the Government to extend payment due dates until such time as the Government makes payment by EFT (but see paragraph (d) of this clause).

(b) Mandatory submission of Contractor's EFT information. (1) The Contractor is required to provide the Government with the information required to make payment by EFT (see paragraph (j) of this clause). The Contractor shall provide this information directly to the office designated in this contract to receive that information (hereafter: “designated office”') by 7 days after Noticeof Award. If more than one designated office is named for the contract, the Contractor shall provide a separate notice to each office. In the event that the EFT information changes, the Contractor shall be responsible for providing the updated information to the designated office(s).

(2) If the Contractor provides EFT information applicable to multiple contracts, the Contractor shall specifically state the applicability of this EFT information in terms acceptable to the designated office. However, EFT information supplied to a designated office shall be applicable only to contracts that identify that designated office as the office to receive EFT information for that contract.

(c) Mechanisms for EFT payment. The Government may make payment by EFT through either the Automated Clearing House (ACH) network, subject to the rules of the National Automated Clearing House Association, or the Fedwire Transfer System. The rules governing Federal payments through the ACH are contained in 31 CFR part 210.

(d) Suspension of payment. (1) The Government is not required to make any payment under this contract until after receipt, by the designated office, of the correct EFT payment information from the Contractor. Until receipt of the correct EFT information, any invoice or contract financing request shall be deemed not to be a proper invoice for the purpose of prompt payment under this contract. The prompt payment terms of the contract regarding notice of an improper invoice and delays in accrual of interest penalties apply.

(2) If the EFT information changes after submission of correct EFT information, the Government shall begin using the changed EFT information no later than 30 days after its receipt by the designated office to the extent payment is made by EFT. However, the Contractor may request that no further payments be made until the updated EFT information is implemented by the payment office. If such suspension would result in a late payment under the prompt payment terms of this contract, the Contractor's request for suspension shall extend the due date for payment by the number of days of the suspension.

(e) Liability for uncompleted or erroneous transfers. (1) If an uncompleted or erroneous transfer occurs because the Government used the Contractor's EFT information incorrectly, the Government remains responsible for--

(i) Making a correct payment;

(ii) Paying any prompt payment penalty due; and

(iii) Recovering any erroneously directed funds.

(2) If an uncompleted or erroneous transfer occurs because the Contractor's EFT information was incorrect, or was revised within 30 days of Government release of the EFT payment transaction instruction to the Federal Reserve System, and--

(i) If the funds are no longer under the control of the payment office, the Government is deemed to have made payment and the Contractor is responsible for recovery of any erroneously directed funds; or

(ii) If the funds remain under the control of the payment office, the Government shall not make payment and the provisions of paragraph (d) shall apply.

(f) EFT and prompt payment. A payment shall be deemed to have been made in a timely manner in accordance with the prompt payment terms of this contract if, in the EFT payment transaction instruction released to the Federal Reserve System, the date specified for settlement of the payment is on or before the prompt payment due date, provided the specified payment date is a valid date under the rules of the Federal Reserve System.

(g) EFT and assignment of claims. If the Contractor assigns the proceeds of this contract as provided for in the assignment of claims terms of this contract, the Contractor shall require as a condition of any such assignment, that the assignee shall provide the EFT information required by paragraph (j) of this clause to the designated office, and shall be paid by EFT in accordance with the terms of this clause. In all respects, the requirements of this clause shall apply to the assignee as if it were the Contractor. EFT information that shows the ultimate recipient of the transfer to be other than the Contractor, in the absence of a proper assignment of claims acceptable to the Government, is incorrect EFT information within the meaning of paragraph (d) of this clause.

(h) Liability for change of EFT information by financial agent. The Government is not liable for errors resulting from changes to EFT information provided by the Contractor's financial agent.

(i) Payment information. The payment or disbursing office shall forward to the Contractor available payment information that is suitable for transmission as of the date of release of the EFT instruction to the Federal Reserve System. The Government may request the Contractor to designate a desired format and method(s) for delivery of payment information from a list of formats and methods the payment office is capable of executing. However, the Government does not guarantee that any particular format or method of delivery is available at any particular payment office and retains the latitude to use the format and delivery method most convenient to the Government. If the Government makes payment by check in accordance with paragraph (a) of this clause, the Government shall mail the payment information to the remittance address in the contract.

(j) EFT information. The Contractor shall provide the following information to the designated office. The Contractor may supply this data for this or multiple contracts (see paragraph (b) of this clause). The Contractor shall designate a single financial agent per contract capable of receiving and processing the EFT information using the EFT methods described in paragraph (c) of this clause.

(1) The contract number (or other procurement identification number).

(2) The Contractor's name and remittance address, as stated in the contract(s).

(3) The signature (manual or electronic, as appropriate), title, and telephone number of the Contractor official authorized to provide this information.

(4) The name, address, and 9-digit Routing Transit Number of the Contractor's financial agent.

(5) The Contractor's account number and the type of account (checking, saving, or lockbox).

(6) If applicable, the Fedwire Transfer System telegraphic abbreviation of the Contractor's financial agent.

(7) If applicable, the Contractor shall also provide the name, address, telegraphic abbreviation, and 9-digit Routing Transit Number of the correspondent financial institution receiving the wire transfer payment if the Contractor's financial agent is not directly on-line to the Fedwire Transfer System; and, therefore, not the receiver of the wire transfer payment.

(End of clause)

52.236-1 PERFORMANCE OF WORK BY THE CONTRACTOR (APR 1984)

The Contractor shall perform on the site, and with its own organization, work equivalent to at least 12% (twelve) percent of the total amount of work to be performed under the contract. This percentage may be reduced by a supplemental agreement to this contract if, during performing the work, the Contractor requests a reduction and the Contracting Officer determines that the reduction would be to the advantage of the Government.

(End of clause)

52.249-5000 BASIS FOR SETTLEMENT OF PROPOSALS

Actual costs will be used to determine equipment costs for a settlement proposal submitted on the total cost basis under FAR 49.206-2(b). In evaluating a terminations settlement proposal using the total cost basis, the following principles will be applied to determine allowable equipment costs:

(1) Actual costs for each piece of equipment, or groups of similar serial or series equipment, need not be available in the contractor's accounting records to determine total actual equipment costs.

(2) If equipment costs have been allocated to a contract using predetermined rates , those charges will be adjusted to actual costs.

(3) Recorded job costs adjusted for unallowable expenses will be used to determine equipment operating expenses.

(4) Ownership costs (depreciation) will be determined using the contractor's depreciation schedule (subject to the provisions of FAR 31.205-11).

(5) License, taxes, storage and insurance costs are normally recovered as an indirect expense and unless the contractor charges these costs directly to contracts, they will be recovered through the indirect expense rate.

(End of Clause)

52.252-2 CLAUSES INCORPORATED BY REFERENCE (FEB 1998)

This contract incorporates one or more clauses by reference, with the same force and effect as if they were given in full text. Upon request, the Contracting Officer will make their full text available. Also, the full text of a clause may be accessed electronically at this/these address(es):

www.arnet.gov or www.farsite.hill.af.mil

(End of clause)

252.204-7004 CENTRAL CONTRACTOR REGISTRATION (52.204-7) ALTERNATE A (SEP 2007)

(a) Definitions. As used in this clause--

“Central Contractor Registration (CCR) database” means the primary Government repository for contractor information required for the conduct of business with the Government.

“Commercial and Government Entity (CAGE) code” means--

(1) A code assigned by the Defense Logistics Information Service (DLIS) to identify a commercial or Government entity; or

(2) A code assigned by a member of the North Atlantic Treaty Organization that DLIS records and maintains in the CAGE master file. This type of code is known as an “NCAGE code.”

“Data Universal Numbering System (DUNS) number” means the 9-digit number assigned by Dun and Bradstreet, Inc. (D&B) to identify unique business entities.

“Data Universal Numbering System +4 (DUNS+4) number” means the DUNS number assigned by D&B plus a 4-character suffix that may be assigned by a business concern. (D&B has no affiliation with this 4-character suffix.) This 4-character suffix may be assigned at the discretion of the business concern to establish additional CCR records for identifying alternative Electronic Funds Transfer (EFT) accounts (see Subpart 32.11 of the Federal Acquisition Regulation) for the same parent concern.

“Registered in the CCR database” means that--

(1) The Contractor has entered all mandatory information, including the DUNS number or the DUNS+4 number, into the CCR database;

(2) The Contractor's CAGE code is in the CCR database; and

(3) The Government has validated all mandatory data fields, to include validation of the Taxpayer Identification Number (TIN) with the Internal Revenue Service, and has marked the records ``Active." The Contractor will be required to provide consent for TIN validation to the Government as part of the CCR registration process.

(b)(1) By submission of an offer, the offeror acknowledges the requirement that a prospective awardee shall be registered in the CCR database prior to award, during performance, and through final payment of any contract, basic agreement, basic ordering agreement, or blanket purchasing agreement resulting from this solicitation.

(2) The offeror shall enter, in the block with its name and address on the cover page of its offer, the annotation "DUNS" or "DUNS +4" followed by the DUNS or DUNS +4 number that identifies the offeror's name and address exactly as stated in the offer. The DUNS number will be used by the Contracting Officer to verify that the offeror is registered in the CCR database.

(c) If the offeror does not have a DUNS number, it should contact Dun and Bradstreet directly to obtain one.

(1) An offeror may obtain a DUNS number-

(i) If located within the United States, by calling Dun and Bradstreet at 1-866-705-5711 or via the Internet at http://www.dnb.com; or

(ii) If located outside the United States, by contacting the local Dun and Bradstreet office.

(2) The offeror should be prepared to provide the following information:

(i) Company legal business.

(ii) Tradestyle, doing business, or other name by which your entity is commonly recognized.

(iii) Company Physical Street Address, City, State, and Zip Code.

(iv) Company Mailing Address, City, State and Zip Code (if separate from physical).

(v) Company Telephone Number.

(vi) Date the company was started.

(vii) Number of employees at your location.

(viii) Chief executive officer/key manager.

(ix) Line of business (industry).

(x) Company Headquarters name and address (reporting relationship within your entity).

(d) If the Offeror does not become registered in the CCR database in the time prescribed by the Contracting Officer, the Contracting Officer will proceed to award to the next otherwise successful registered Offeror.

(e) Processing time, which normally takes 48 hours, should be taken into consideration when registering. Offerors who are not registered should consider applying for registration immediately upon receipt of this solicitation.

(f) The Contractor is responsible for the accuracy and completeness of the data within the CCR database, and for any liability resulting from the Government's reliance on inaccurate or incomplete data. To remain registered in the CCR database after the initial registration, the Contractor is required to review and update on an annual basis from the date of initial registration or subsequent updates its information in the CCR database to ensure it is current, accurate and complete. Updating information in the CCR does not alter the terms and conditions of this contract and is not a substitute for a properly executed contractual document.

(g)
(1)
(i) If a Contractor has legally changed its business name, "doing business as" name, or division name (whichever is shown on the contract), or has transferred the assets used in performing the contract, but has not completed the necessary requirements regarding novation and change-of-name agreements in Subpart 42.12, the Contractor shall provide the responsible Contracting Officer a minimum of one business day's written notification of its intention to (A) change the name in the CCR database; (B) comply with the requirements of Subpart 42.12 of the FAR; and (C) agree in writing to the timeline and procedures specified by the responsible Contracting Officer. The Contractor must provide with the notification sufficient documentation to support the legally changed name.

(ii) If the Contractor fails to comply with the requirements of paragraph (g)(1)(i) of this clause, or fails to perform the agreement at paragraph (g)(1)(i)(C) of this clause, and, in the absence of a properly executed novation or change-of-name agreement, the CCR information that shows the Contractor to be other than the Contractor indicated in the contract will be considered to be incorrect information within the meaning of the "Suspension of Payment" paragraph of the electronic funds transfer (EFT) clause of this contract.

(2) The Contractor shall not change the name or address for EFT payments or manual payments, as appropriate, in the CCR record to reflect an assignee for the purpose of assignment of claims (see FAR Subpart 32.8, Assignment of Claims). Assignees shall be separately registered in the CCR database. Information provided to the Contractor's

CCR record that indicates payments, including those made by EFT, to an ultimate recipient other than that Contractor will be considered to be incorrect information within the meaning of the "Suspension of payment" paragraph of the EFT clause of this contract.

(h) Offerors and Contractors may obtain information on registration and annual confirmation requirements via the internet at http://www.ccr.gov or by calling 1-888-227-2423, or 269-961-5757.

(End of clause)

252.225-7040 CONTRACTOR PERSONNEL AUTHORIZED TO ACCOMPANY U.S. ARMED FORCES DEPLOYED OUTSIDE THE UNITED STATES (JAN 2009)

(a) Definitions. As used in this clause--Combatant Commander means the commander of a unified or specified combatant command established in accordance with 10 U.S.C. 161.

Designated operational area means a geographic area designated by the combatant commander or subordinate joint force commander for the conduct or support of specified military operations.

Law of war means that part of international law that regulates the conduct of armed hostilities. The law of war encompasses all international law for the conduct of hostilities binding on the United States or its individual citizens, including treaties and international agreements to which the United States is a party, and applicable customary international law.

Subordinate joint force commander means a sub-unified commander or joint task force commander.

(b) General.

(1) This clause applies when Contractor personnel are authorized to accompany U.S. Armed Forces deployed outside the United States in--

(i) Contingency operations;

(ii) Humanitarian or peacekeeping operations; or

(iii) Other military operations or military exercises, when designated by the Combatant Commander.

(2) Contract performance in support of U.S. Armed Forces deployed outside the United States may require work in dangerous or austere conditions. Except as otherwise provided in the contract, the Contractor accepts the risks associated with required contract performance in such operations.

(3) Contractor personnel are civilians accompanying the U.S. Armed Forces.

(i) Except as provided in paragraph (b)(3)(ii) of this clause, Contractor personnel are only authorized to use deadly force in self-defense.

(ii) Contractor personnel performing security functions are also authorized to use deadly force when such force reasonably appears necessary to execute their security mission to protect assets/persons, consistent with the terms and conditions contained in their contract or with their job description and terms of employment.

(iii) Unless immune from host nation jurisdiction by virtue of an international agreement or international law, inappropriate use of force by contractor personnel authorized to accompany the U.S. Armed Forces can subject such personnel to United States or host nation prosecution and civil liability (see paragraphs (d) and (j)(3) of this clause).

(4) Service performed by Contractor personnel subject to this clause is not active duty or service under 38 U.S.C. 106 note.

(c) Support. (1)(i) The Combatant Commander will develop a security plan for protection of Contractor personnel in locations where there is not sufficient or legitimate civil authority, when the Combatant Commander decides it is in the interests of the Government to provide security because--

(A) The Contractor cannot obtain effective security services;

(B) Effective security services are unavailable at a reasonable cost; or

(C) Threat conditions necessitate security through military means.

(ii) The Contracting Officer shall include in the contract the level of protection to be provided to Contractor personnel.

(iii) In appropriate cases, the Combatant Commander may provide security through military means, commensurate with the level of security provided DoD civilians.

(2)(i) Generally, all Contractor personnel authorized to accompany the U.S. Armed Forces in the designated operational area are authorized to receive resuscitative care, stabilization, hospitalization at level III military treatment facilities, and assistance with patient movement in emergencies where loss of life, limb, or eyesight could occur. Hospitalization will be limited to stabilization and short-term medical treatment with an emphasis on return to duty or placement in the patient movement system.

(ii) When the Government provides medical treatment or transportation of Contractor personnel to a selected civilian facility, the Contractor shall ensure that the Government is reimbursed for any costs associated with such treatment or transportation.

(iii) Medical or dental care beyond this standard is not authorized unless specified elsewhere in this contract.

(3) Unless specified elsewhere in this contract, the Contractor is responsible for all other support required for its personnel engaged in the designated operational area under this contract.

(4) Contractor personnel must have a letter of authorization issued by the Contracting Officer in order to process through a deployment center or to travel to, from, or within the designated operational area. The letter of authorization also will identify any additional authorizations, privileges, or Government support that Contractor personnel are entitled to under this contract.

(d) Compliance with laws and regulations. (1) The Contractor shall comply with, and shall ensure that its personnel authorized to accompany U.S. Armed Forces deployed outside the United States as specified in paragraph (b)(1) of this clause are familiar with and comply with, all applicable--

(i) United States, host country, and third country national laws;

(ii) Provisions of the law of war, as well as any other applicable treaties and international agreements;

(iii) United States regulations, directives, instructions, policies, and procedures; and

(iv) Orders, directives, and instructions issued by the Combatant Commander, including those relating to force protection, security, health, safety, or relations and interaction with local nationals.

(2) The Contractor shall institute and implement an effective program to prevent violations of the law of war by its employees and subcontractors, including law of war training in accordance with paragraph (e)(1)(vii) of this clause.

(e) Pre-deployment requirements.

(1) The Contractor shall ensure that the following requirements are met prior to deploying personnel authorized to accompany U.S. Armed Forces. Specific requirements for each category may be specified in the statement of work or elsewhere in the contract.

(i) All required security and background checks are complete and acceptable.

(ii) All deploying personnel meet the minimum medical screening requirements and have received all required immunizations as specified in the contract. The Government will provide, at no cost to the Contractor, any theater-specific immunizations and/or medications not available to the general public.

(iii) Deploying personnel have all necessary passports, visas, and other documents required to enter and exit a designated operational area and have a Geneva Conventions identification card, or other appropriate DoD identity credential, from the deployment center. Any Common Access Card issued to deploying personnel shall contain the access permissions allowed by the letter of authorization issued in accordance with paragraph (c)(4) of this clause.

(iv) Special area, country, and theater clearance is obtained for personnel. Clearance requirements are in DoD Directive 4500.54, Official Temporary Duty Abroad, and DoD 4500.54-G, DoD Foreign Clearance Guide. Contractor personnel are considered non-DoD personnel traveling under DoD sponsorship.

(v) All personnel have received personal security training. At a minimum, the training shall--

(A) Cover safety and security issues facing employees overseas;

(B) Identify safety and security contingency planning activities; and

(C) Identify ways to utilize safety and security personnel and other resources appropriately.

(vi) All personnel have received isolated personnel training, if specified in the contract, in accordance with DoD Instruction 1300.23, Isolated Personnel Training for DoD Civilian and Contractors.

(vii) Personnel have received law of war training as follows:

(A) Basic training is required for all Contractor personnel authorized to accompany U.S. Armed Forces deployed outside the United States. The basic training will be provided through--

(1) A military-run training center; or

(2) A Web-based source, if specified in the contract or approved by the Contracting Officer.

(B) Advanced training, commensurate with their duties and responsibilities, may be required for some Contractor personnel as specified in the contract.

(2) The Contractor shall notify all personnel who are not a host country national, or who are not ordinarily resident in the host country, that--

(i) Such employees, and dependents residing with such employees, who engage in conduct outside the United States that would constitute an offense punishable by imprisonment for more than one year if the conduct had been engaged in within the special maritime and territorial jurisdiction of the United States, may potentially be subject to the criminal jurisdiction of the United States in accordance with the Military Extraterritorial Jurisdiction Act of 2000 (18 U.S.C. 3621, et seq.);

(ii) Pursuant to the War Crimes Act (18 U.S.C. 2441), Federal criminal jurisdiction also extends to conduct that is determined to constitute a war crime when committed by a civilian national of the United States;

(iii) Other laws may provide for prosecution of U.S. nationals who commit offenses on the premises of U.S. diplomatic, consular, military or other U.S. Government missions outside the United States (18 U.S.C. 7(9)); and

(iv) In time of declared war or a contingency operation, Contractor personnel authorized to accompany U.S. Armed Forces in the field are subject to the jurisdiction of the Uniform Code of Military Justice under 10 U.S.C. 802(a)(10).

(f) Processing and departure points. Deployed Contractor personnel shall--

(1) Process through the deployment center designated in the contract, or as otherwise directed by the Contracting Officer, prior to deploying. The deployment center will conduct deployment processing to ensure visibility and accountability of Contractor personnel and to ensure that all deployment requirements are met, including the requirements specified in paragraph (e)(1) of this clause;

(2) Use the point of departure and transportation mode directed by the Contracting Officer; and

(3) Process through a Joint Reception Center (JRC) upon arrival at the deployed location. The JRC will validate personnel accountability, ensure that specific designated operational area entrance requirements are met, and brief Contractor personnel on theater-specific policies and procedures.

(g) Personnel data.

(1) The Contractor shall enter before deployment and maintain data for all Contractor personnel that are authorized to accompany U.S. Armed Forces deployed outside the United States as specified in paragraph (b)(1) of this clause. The Contractor shall use the Synchronized Predeployment and Operational Tracker (SPOT) web-based system, at http://www.dod.mil/bta/products/spot.html, to enter and maintain the data.

(2) The Contractor shall ensure that all employees in the database have a current DD Form 93, Record of Emergency Data Card, on file with both the Contractor and the designated Government official. The Contracting Officer will inform the Contractor of the Government official designated to receive this data card.

(h) Contractor personnel.

(1) The Contracting Officer may direct the Contractor, at its own expense, to remove and replace any Contractor personnel who jeopardize or interfere with mission accomplishment or who fail to comply with or violate applicable requirements of this contract. Such action may be taken at the Government's discretion without prejudice to its rights under any other provision of this contract, including the Termination for Default clause.

(2) The Contractor shall have a plan on file showing how the Contractor would replace employees who are unavailable for deployment or who need to be replaced during deployment. The Contractor shall keep this plan current and shall provide a copy to the Contracting Officer upon request. The plan shall--

(i) Identify all personnel who are subject to military mobilization;

(ii) Detail how the position would be filled if the individual were mobilized; and

(iii) Identify all personnel who occupy a position that the Contracting Officer has designated as mission essential.

(3) Contractor personnel shall report to the Combatant Commander or a designee, or through other channels such as the military police, a judge advocate, or an inspector general, any suspected or alleged conduct for which there is credible information that such conduct--

(i) Constitutes violation of the law of war; or

(ii) Occurred during any other military operations and would constitute a violation of the law of war if it occurred during an armed conflict.

(i) Military clothing and protective equipment.

(1) Contractor personnel are prohibited from wearing military clothing unless specifically authorized in writing by the Combatant Commander. If authorized to wear military clothing, Contractor personnel must--

(i) Wear distinctive patches, arm bands, nametags, or headgear, in order to be distinguishable from military personnel, consistent with force protection measures; and

(ii) Carry the written authorization with them at all times.

(2) Contractor personnel may wear military-unique organizational clothing and individual equipment (OCIE) required for safety and security, such as ballistic, nuclear, biological, or chemical protective equipment.

(3) The deployment center, or the Combatant Commander, shall issue OCIE and shall provide training, if necessary, to ensure the safety and security of Contractor personnel.

(4) The Contractor shall ensure that all issued OCIE is returned to the point of issue, unless otherwise directed by the Contracting Officer.

(j) Weapons.

(1) If the Contractor requests that its personnel performing in the designated operational area be authorized to carry weapons, the request shall be made through the Contracting Officer to the Combatant Commander, in accordance with DoD Instruction 3020.41, paragraph 6.3.4.1 or, if the contract is for security services, paragraph 6.3.5.3. The Combatant Commander will determine whether to authorize in-theater Contractor personnel to carry weapons and what weapons and ammunition will be allowed.

(2) If the Contracting Officer, subject to the approval of the Combatant Commander, authorizes the carrying of weapons--

(i) The Contracting Officer may authorize the Contractor to issue Contractor-owned weapons and ammunition to specified employees; or

(ii) The Local Combatant Commander may issue Government-furnished weapons and ammunition to the Contractor for issuance to specified Contractor employees.

(3) The Contractor shall ensure that its personnel who are authorized to carry weapons--

(i) Are adequately trained to carry and use them--

(A) Safely;

(B) With full understanding of, and adherence to, the rules of the use of force issued by the Combatant Commander; and

(C) In compliance with applicable agency policies, agreements, rules, regulations, and other applicable law;

(ii) Are not barred from possession of a firearm by 18 U.S.C. 922; and

(iii) Adhere to all guidance and orders issued by the Combatant Commander regarding possession, use, safety, and accountability of weapons and ammunition.

(4) Whether or not weapons are Government-furnished, all liability for the use of any weapon by Contractor personnel rests solely with the Contractor and the Contractor employee using such weapon.

(5) Upon redeployment or revocation by the Combatant Commander of the Contractor's authorization to issue firearms, the Contractor shall ensure that all Government-issued weapons and unexpended ammunition are returned as directed by the Contracting Officer.

(k) Vehicle or equipment licenses. Contractor personnel shall possess the required licenses to operate all vehicles or equipment necessary to perform the contract in the designated operational area.

(l) Purchase of scarce goods and services. If the Combatant Commander has established an organization for the designated operational area whose function is to determine that certain items are scarce goods or services, the Contractor shall coordinate with that organization local purchases of goods and services designated as scarce, in accordance with instructions provided by the Contracting Officer.

(m) Evacuation.

(1) If the Combatant Commander orders a mandatory evacuation of some or all personnel, the Government will provide assistance, to the extent available, to United States and third country national Contractor personnel.

(2) In the event of a non-mandatory evacuation order, unless authorized in writing by the Contracting Officer, the Contractor shall maintain personnel on location sufficient to meet obligations under this contract.

(n) Next of kin notification and personnel recovery.

(1) The Contractor shall be responsible for notification of the employee-designated next of kin in the event an employee dies, requires evacuation due to an injury, or is isolated, missing, detained, captured, or abducted.

(2) In the case of isolated, missing, detained, captured, or abducted Contractor personnel, the Government will assist in personnel recovery actions in accordance with DoD Directive 2310.2, Personnel Recovery.

(o) Mortuary affairs. Mortuary affairs for Contractor personnel who die while accompanying the U.S. Armed Forces will be handled in accordance with DoD Directive 1300.22, Mortuary Affairs Policy.

(p) Changes. In addition to the changes otherwise authorized by the Changes clause of this contract, the Contracting Officer may, at any time, by written order identified as a change order, make changes in the place of performance or Government-furnished facilities, equipment, material, services, or site. Any change order issued in accordance with this paragraph (p) shall be subject to the provisions of the Changes clause of this contract.

(q) Subcontracts. The Contractor shall incorporate the substance of this clause, including this paragraph (q), in all subcontracts when subcontractor personnel are authorized to accompany U.S. Armed Forces deployed outside the United States in--

(1) Contingency operations;

(2) Humanitarian or peacekeeping operations; or

(3) Other military operations or military exercises, when designated by the Combatant Commander.

(End of clause)

252.225-7040 CONTRACTOR PERSONNEL AUTHORIZED TO ACCOMPANY U.S. ARMED FORCES DEPLOYED OUTSIDE THE UNITED STATES (JAN 2009)

(a) Definitions. As used in this clause--Combatant Commander means the commander of a unified or specified combatant command established in accordance with 10 U.S.C. 161.

Designated operational area means a geographic area designated by the combatant commander or subordinate joint force commander for the conduct or support of specified military operations.

Law of war means that part of international law that regulates the conduct of armed hostilities. The law of war encompasses all international law for the conduct of hostilities binding on the United States or its individual citizens, including treaties and international agreements to which the United States is a party, and applicable customary international law.

Subordinate joint force commander means a sub-unified commander or joint task force commander.

(b) General.

(1) This clause applies when Contractor personnel are authorized to accompany U.S. Armed Forces deployed outside the United States in--

(i) Contingency operations;

(ii) Humanitarian or peacekeeping operations; or

(iii) Other military operations or military exercises, when designated by the Combatant Commander.

(2) Contract performance in support of U.S. Armed Forces deployed outside the United States may require work in dangerous or austere conditions. Except as otherwise provided in the contract, the Contractor accepts the risks associated with required contract performance in such operations.

(3) Contractor personnel are civilians accompanying the U.S. Armed Forces.

(i) Except as provided in paragraph (b)(3)(ii) of this clause, Contractor personnel are only authorized to use deadly force in self-defense.

(ii) Contractor personnel performing security functions are also authorized to use deadly force when such force reasonably appears necessary to execute their security mission to protect assets/persons, consistent with the terms and conditions contained in their contract or with their job description and terms of employment.

(iii) Unless immune from host nation jurisdiction by virtue of an international agreement or international law, inappropriate use of force by contractor personnel authorized to accompany the U.S. Armed Forces can subject such personnel to United States or host nation prosecution and civil liability (see paragraphs (d) and (j)(3) of this clause).

(4) Service performed by Contractor personnel subject to this clause is not active duty or service under 38 U.S.C. 106 note.

(c) Support. (1)(i) The Combatant Commander will develop a security plan for protection of Contractor personnel in locations where there is not sufficient or legitimate civil authority, when the Combatant Commander decides it is in the interests of the Government to provide security because--

(A) The Contractor cannot obtain effective security services;

(B) Effective security services are unavailable at a reasonable cost; or

(C) Threat conditions necessitate security through military means.

(ii) The Contracting Officer shall include in the contract the level of protection to be provided to Contractor personnel.

(iii) In appropriate cases, the Combatant Commander may provide security through military means, commensurate with the level of security provided DoD civilians.

(2)(i) Generally, all Contractor personnel authorized to accompany the U.S. Armed Forces in the designated operational area are authorized to receive resuscitative care, stabilization, hospitalization at level III military treatment facilities, and assistance with patient movement in emergencies where loss of life, limb, or eyesight could occur. Hospitalization will be limited to stabilization and short-term medical treatment with an emphasis on return to duty or placement in the patient movement system.

(ii) When the Government provides medical treatment or transportation of Contractor personnel to a selected civilian facility, the Contractor shall ensure that the Government is reimbursed for any costs associated with such treatment or transportation.

(iii) Medical or dental care beyond this standard is not authorized unless specified elsewhere in this contract.

(3) Unless specified elsewhere in this contract, the Contractor is responsible for all other support required for its personnel engaged in the designated operational area under this contract.

(4) Contractor personnel must have a letter of authorization issued by the Contracting Officer in order to process through a deployment center or to travel to, from, or within the designated operational area. The letter of authorization also will identify any additional authorizations, privileges, or Government support that Contractor personnel are entitled to under this contract.

(d) Compliance with laws and regulations. (1) The Contractor shall comply with, and shall ensure that its personnel authorized to accompany U.S. Armed Forces deployed outside the United States as specified in paragraph (b)(1) of this clause are familiar with and comply with, all applicable--

(i) United States, host country, and third country national laws;

(ii) Provisions of the law of war, as well as any other applicable treaties and international agreements;

(iii) United States regulations, directives, instructions, policies, and procedures; and

(iv) Orders, directives, and instructions issued by the Combatant Commander, including those relating to force protection, security, health, safety, or relations and interaction with local nationals.

(2) The Contractor shall institute and implement an effective program to prevent violations of the law of war by its employees and subcontractors, including law of war training in accordance with paragraph (e)(1)(vii) of this clause.

(e) Pre-deployment requirements.

(1) The Contractor shall ensure that the following requirements are met prior to deploying personnel authorized to accompany U.S. Armed Forces. Specific requirements for each category may be specified in the statement of work or elsewhere in the contract.

(i) All required security and background checks are complete and acceptable.

(ii) All deploying personnel meet the minimum medical screening requirements and have received all required immunizations as specified in the contract. The Government will provide, at no cost to the Contractor, any theater-specific immunizations and/or medications not available to the general public.

(iii) Deploying personnel have all necessary passports, visas, and other documents required to enter and exit a designated operational area and have a Geneva Conventions identification card, or other appropriate DoD identity credential, from the deployment center. Any Common Access Card issued to deploying personnel shall contain the access permissions allowed by the letter of authorization issued in accordance with paragraph (c)(4) of this clause.

(iv) Special area, country, and theater clearance is obtained for personnel. Clearance requirements are in DoD Directive 4500.54, Official Temporary Duty Abroad, and DoD 4500.54-G, DoD Foreign Clearance Guide. Contractor personnel are considered non-DoD personnel traveling under DoD sponsorship.

(v) All personnel have received personal security training. At a minimum, the training shall--

(A) Cover safety and security issues facing employees overseas;

(B) Identify safety and security contingency planning activities; and

(C) Identify ways to utilize safety and security personnel and other resources appropriately.

(vi) All personnel have received isolated personnel training, if specified in the contract, in accordance with DoD Instruction 1300.23, Isolated Personnel Training for DoD Civilian and Contractors.

(vii) Personnel have received law of war training as follows:

(A) Basic training is required for all Contractor personnel authorized to accompany U.S. Armed Forces deployed outside the United States. The basic training will be provided through--

(1) A military-run training center; or

(2) A Web-based source, if specified in the contract or approved by the Contracting Officer.

(B) Advanced training, commensurate with their duties and responsibilities, may be required for some Contractor personnel as specified in the contract.

(2) The Contractor shall notify all personnel who are not a host country national, or who are not ordinarily resident in the host country, that--

(i) Such employees, and dependents residing with such employees, who engage in conduct outside the United States that would constitute an offense punishable by imprisonment for more than one year if the conduct had been engaged in within the special maritime and territorial jurisdiction of the United States, may potentially be subject to the criminal jurisdiction of the United States in accordance with the Military Extraterritorial Jurisdiction Act of 2000 (18 U.S.C. 3621, et seq.);

(ii) Pursuant to the War Crimes Act (18 U.S.C. 2441), Federal criminal jurisdiction also extends to conduct that is determined to constitute a war crime when committed by a civilian national of the United States;

(iii) Other laws may provide for prosecution of U.S. nationals who commit offenses on the premises of U.S. diplomatic, consular, military or other U.S. Government missions outside the United States (18 U.S.C. 7(9)); and

(iv) In time of declared war or a contingency operation, Contractor personnel authorized to accompany U.S. Armed Forces in the field are subject to the jurisdiction of the Uniform Code of Military Justice under 10 U.S.C. 802(a)(10).

(f) Processing and departure points. Deployed Contractor personnel shall--

(1) Process through the deployment center designated in the contract, or as otherwise directed by the Contracting Officer, prior to deploying. The deployment center will conduct deployment processing to ensure visibility and accountability of Contractor personnel and to ensure that all deployment requirements are met, including the requirements specified in paragraph (e)(1) of this clause;

(2) Use the point of departure and transportation mode directed by the Contracting Officer; and

(3) Process through a Joint Reception Center (JRC) upon arrival at the deployed location. The JRC will validate personnel accountability, ensure that specific designated operational area entrance requirements are met, and brief Contractor personnel on theater-specific policies and procedures.

(g) Personnel data.

(1) The Contractor shall enter before deployment and maintain data for all Contractor personnel that are authorized to accompany U.S. Armed Forces deployed outside the United States as specified in paragraph (b)(1) of this clause. The Contractor shall use the Synchronized Predeployment and Operational Tracker (SPOT) web-based system, at http://www.dod.mil/bta/products/spot.html, to enter and maintain the data.

(2) The Contractor shall ensure that all employees in the database have a current DD Form 93, Record of Emergency Data Card, on file with both the Contractor and the designated Government official. The Contracting Officer will inform the Contractor of the Government official designated to receive this data card.

(h) Contractor personnel.

(1) The Contracting Officer may direct the Contractor, at its own expense, to remove and replace any Contractor personnel who jeopardize or interfere with mission accomplishment or who fail to comply with or violate applicable requirements of this contract. Such action may be taken at the Government's discretion without prejudice to its rights under any other provision of this contract, including the Termination for Default clause.

(2) The Contractor shall have a plan on file showing how the Contractor would replace employees who are unavailable for deployment or who need to be replaced during deployment. The Contractor shall keep this plan current and shall provide a copy to the Contracting Officer upon request. The plan shall--

(i) Identify all personnel who are subject to military mobilization;

(ii) Detail how the position would be filled if the individual were mobilized; and

(iii) Identify all personnel who occupy a position that the Contracting Officer has designated as mission essential.

(3) Contractor personnel shall report to the Combatant Commander or a designee, or through other channels such as the military police, a judge advocate, or an inspector general, any suspected or alleged conduct for which there is credible information that such conduct--

(i) Constitutes violation of the law of war; or

(ii) Occurred during any other military operations and would constitute a violation of the law of war if it occurred during an armed conflict.

(i) Military clothing and protective equipment.

(1) Contractor personnel are prohibited from wearing military clothing unless specifically authorized in writing by the Combatant Commander. If authorized to wear military clothing, Contractor personnel must--

(i) Wear distinctive patches, arm bands, nametags, or headgear, in order to be distinguishable from military personnel, consistent with force protection measures; and

(ii) Carry the written authorization with them at all times.

(2) Contractor personnel may wear military-unique organizational clothing and individual equipment (OCIE) required for safety and security, such as ballistic, nuclear, biological, or chemical protective equipment.

(3) The deployment center, or the Combatant Commander, shall issue OCIE and shall provide training, if necessary, to ensure the safety and security of Contractor personnel.

(4) The Contractor shall ensure that all issued OCIE is returned to the point of issue, unless otherwise directed by the Contracting Officer.

(j) Weapons.

(1) If the Contractor requests that its personnel performing in the designated operational area be authorized to carry weapons, the request shall be made through the Contracting Officer to the Combatant Commander, in accordance with DoD Instruction 3020.41, paragraph 6.3.4.1 or, if the contract is for security services, paragraph 6.3.5.3. The Combatant Commander will determine whether to authorize in-theater Contractor personnel to carry weapons and what weapons and ammunition will be allowed.

(2) If the Contracting Officer, subject to the approval of the Combatant Commander, authorizes the carrying of weapons--

(i) The Contracting Officer may authorize the Contractor to issue Contractor-owned weapons and ammunition to specified employees; or

(ii) The Local US Military Combatant Commander may issue Government-furnished weapons and ammunition to the Contractor for issuance to specified Contractor employees.

(3) The Contractor shall ensure that its personnel who are authorized to carry weapons--

(i) Are adequately trained to carry and use them--

(A) Safely;

(B) With full understanding of, and adherence to, the rules of the use of force issued by the Combatant Commander; and

(C) In compliance with applicable agency policies, agreements, rules, regulations, and other applicable law;

(ii) Are not barred from possession of a firearm by 18 U.S.C. 922; and

(iii) Adhere to all guidance and orders issued by the Combatant Commander regarding possession, use, safety, and accountability of weapons and ammunition.

(4) Whether or not weapons are Government-furnished, all liability for the use of any weapon by Contractor personnel rests solely with the Contractor and the Contractor employee using such weapon.

(5) Upon redeployment or revocation by the Combatant Commander of the Contractor's authorization to issue firearms, the Contractor shall ensure that all Government-issued weapons and unexpended ammunition are returned as directed by the Contracting Officer.

(k) Vehicle or equipment licenses. Contractor personnel shall possess the required licenses to operate all vehicles or equipment necessary to perform the contract in the designated operational area.

(l) Purchase of scarce goods and services. If the Combatant Commander has established an organization for the designated operational area whose function is to determine that certain items are scarce goods or services, the Contractor shall coordinate with that organization local purchases of goods and services designated as scarce, in accordance with instructions provided by the Contracting Officer.

(m) Evacuation.

(1) If the Combatant Commander orders a mandatory evacuation of some or all personnel, the Government will provide assistance, to the extent available, to United States and third country national Contractor personnel.

(2) In the event of a non-mandatory evacuation order, unless authorized in writing by the Contracting Officer, the Contractor shall maintain personnel on location sufficient to meet obligations under this contract.

(n) Next of kin notification and personnel recovery.

(1) The Contractor shall be responsible for notification of the employee-designated next of kin in the event an employee dies, requires evacuation due to an injury, or is isolated, missing, detained, captured, or abducted.

(2) In the case of isolated, missing, detained, captured, or abducted Contractor personnel, the Government will assist in personnel recovery actions in accordance with DoD Directive 2310.2, Personnel Recovery.

(o) Mortuary affairs. Mortuary affairs for Contractor personnel who die while accompanying the U.S. Armed Forces will be handled in accordance with DoD Directive 1300.22, Mortuary Affairs Policy.

(p) Changes. In addition to the changes otherwise authorized by the Changes clause of this contract, the Contracting Officer may, at any time, by written order identified as a change order, make changes in the place of performance or Government-furnished facilities, equipment, material, services, or site. Any change order issued in accordance with this paragraph (p) shall be subject to the provisions of the Changes clause of this contract.

(q) Subcontracts. The Contractor shall incorporate the substance of this clause, including this paragraph (q), in all subcontracts when subcontractor personnel are authorized to accompany U.S. Armed Forces deployed outside the United States in--

(1) Contingency operations;

(2) Humanitarian or peacekeeping operations; or

(3) Other military operations or military exercises, when designated by the Combatant Commander.

(End of clause)

252.225-7043 ANTITERRORISM/FORCE PROTECTION POLICY FOR DEFENSE CONTRACTORS OUTSIDE THE UNITED STATES (MAR 2006)

(a) Definition. United States, as used in this clause, means, the 50 States, the District of Columbia, and outlying areas.

(b) Except as provided in paragraph (c) of this clause, the Contractor and its subcontractors, if performing or traveling outside the United States under this contract, shall--

(1) Affiliate with the Overseas Security Advisory Council, if the Contractor or subcontractor is a U.S. entity;

(2) Ensure that Contractor and subcontractor personnel who are U.S. nationals and are in-country on a non-transitory basis, register with the U.S. Embassy, and that Contractor and subcontractor personnel who are third country nationals comply with any security related requirements of the Embassy of their nationality;

(3) Provide, to Contractor and subcontractor personnel, antiterrorism/force protection awareness information commensurate with that which the Department of Defense (DoD) provides to its military and civilian personnel and their families, to the extent such information can be made available prior to travel outside the United States; and

(4) Obtain and comply with the most current antiterrorism/force protection guidance for Contractor and subcontractor personnel.

(c) The requirements of this clause do not apply to any subcontractor that is--

(1) A foreign government;

(2) A representative of a foreign government; or

(3) A foreign corporation wholly owned by a foreign government.

(d) Information and guidance pertaining to DoD antiterrorism/force protection can be obtained from Combined Secuirty Transistion Command, Afghanistan, (CSTC-A) Camp Eggers, Kabul, Afghanistan.

(End of clause)

252.225-7044 BALANCE OF PAYMENTS PROGRAM--CONSTRUCTION MATERIAL (JAN 2009)

(a) Definitions. As used in this clause--

Commercially available off-the-shelf (COTS) item--

(1) Means any item of supply (including construction material) that is--

(i) A commercial item (as defined in paragraph (1) of the definition of ``commercial item'' in section 2.101 of the Federal Acquisition Regulation);

(ii) Sold in substantial quantities in the commercial marketplace; and

(iii) Offered to the Government, under a contract or subcontract at any tier, without modification, in the same form in which it is sold in the commercial marketplace; and

(2) Does not include bulk cargo, as defined in section 3 of the Shipping Act of 1984 (46 U.S.C. 40102), such as agricultural products and petroleum products.

“Component” means any article, material, or supply incorporated directly into construction material.

“Construction material” means an article, material, or supply brought to the construction site by the Contractor or a subcontractor for incorporation into the building or work. The term also includes an item brought to the site preassembled from articles, materials, or supplies. However, emergency life safety systems, such as emergency lighting, fire alarm, and audio evacuation systems, that are discrete systems incorporated into a public building or work and that are produced as complete systems, are evaluated as a single and distinct construction material

regardless of when or how the individual parts or components of those systems are delivered to the construction site. Materials purchased directly by the Government are supplies, not construction material.

“Cost of components” means--

(1) For components purchased by the Contractor, the acquisition cost, including transportation costs to the place of incorporation into the end product (whether or not such costs are paid to a domestic firm), and any applicable duty (whether or not a duty-free entry certificate is issued); or

(2) For components manufactured by the Contractor, all costs associated with the manufacture of the component, including transportation costs as described in paragraph (1) of this definition, plus allocable overhead costs, but excluding profit. Cost of components does not include any costs associated with the manufacture of the construction material.

“Domestic construction material” means--

(1) An unmanufactured construction material mined or produced in the United States; or

(2) A construction material manufactured in the United States, if--

(i) The cost of its components mined, produced, or manufactured in the United States exceeds 50 percent of the cost of all its components. Components of foreign origin of the same class or kind for which nonavailability determinations have been made are treated as domestic; or

(ii) The construction material is a COTS item.

``United States" means the 50 States, the District of Columbia, and outlying areas.

(b) Domestic preference. This clause implements the Balance of Payments Program by providing a preference for domestic construction material. The Contractor shall use only domestic construction material in performing this contract, except for—

(1) Construction material valued at or below the simplified acquisition threshold in part 2 of the Federal Acquisition Regulation; or

(2) The construction material or components listed by the Government as follows:

Sand, cement, asphalt, gravel and other soil materials, stone, concrete masonry units, fired brick, reinforcing steel, electrical materials, fencing, gypsum wall board, roofing materials, paint, valves floor tiles, acoustical ceiling panels, and other systems steel joist, miscellaneous metal and building insulations.

(End of clause)

252.229-7000 INVOICES EXCLUSIVE OF TAXES OR DUTIES (JUNE 1997)

Invoices submitted in accordance with the terms and conditions of this contract shall be exclusive of all taxes or duties for which relief is available.

(End of clause)

252.229-7001 TAX RELIEF (JUN 1997)

(a) Prices set forth in this contract are exclusive of all taxes and duties from which the United States Government is exempt by virtue of tax agreements between the United States Government and the Contractor's government. The following taxes or duties have been excluded from the contract price:

“Reference the exchange of diplomatic notes between the USA and Afghanistan dated September 26, 2002, December 12, 2002 and May 28, 2003; and/or successor notes or agreements as applicable.”

(b) The Contractor's invoice shall list separately the gross price, amount of tax deducted, and net price charged.

(c) When items manufactured to United States Government specifications are being acquired, the Contractor shall identify the materials or components intended to be imported in order to ensure that relief from import duties is obtained. If the Contractor intends to use imported products from inventories on hand, the price of which includes a factor for import duties, the Contractor shall ensure the United States Government's exemption from these taxes. The Contractor may obtain a refund of the import duties from its government or request the duty-free import of an amount of supplies or components corresponding to that used from inventory for this contract.
(End of clause)

SECTION 00800 SPECIAL CONTRACT REQUIREMENTS

SECTION 00800 CLAUSES INCORPORATED BY REFERENCE

52.211-13	Time Extensions	SEP 2000
52.246-12	Inspection of Construction	AUG 1996
252.232-7003	Electronic Submission of Payment Requests and Receiving Reports	MAR 2008

SECTION 00800 CLAUSES INCORPORATED BY FULL TEXT

52.211-10 COMMENCEMENT, PROSECUTION, AND COMPLETION OF WORK (APR 1984)

The Contractor shall be required to (a) commence work under this contract within 7 (seven) calendar days after the date the Contractor receives the notice to proceed, (b) prosecute the work diligently, and (c) complete the entire work ready for use not later than 365 calendar days. The time stated for completion shall include final cleanup of the premises.

(End of clause)

52.211-12 LIQUIDATED DAMAGES--CONSTRUCTION (SEP 2000)

(a) If the Contractor fails to complete the work within the time specified in the contract, the Contractor shall pay liquidated damages to the Government in the amount of $1,650.00 for each calendar day of delay until the work is completed or accepted.

(b) If the Government terminates the Contractor's right to proceed, liquidated damages will continue to accrue until the work is completed. These liquidated damages are in addition to excess costs of repurchase under the Termination clause.

(End of clause)

52.232-5000 PAYMENT FOR MATERIALS DELIVERED OFF-SITE (MAR 1995)—EFARS

(a) Pursuant to FAR clause 52.232-5, Payments Under Fixed Priced Construction Contracts, materials delivered to the contractor at locations other than the site of the work may be taken into consideration in making payments if included in payment estimates and if all the conditions of the General Provisions are fulfilled. Payment for items delivered to locations other than the work site will be limited to: (1) materials required by the technical provisions; or (3) materials that have been fabricated to the point where they are identifiable to an item of work required under this contract.

(b) Such payment will be made only after receipt of paid or receipted invoices or invoices with canceled check showing title to the items in the prime contractor and including the value of material and labor incorporated into the item. In addition to petroleum products, payment for materials delivered off-site is limited to the following items: NONE

(End of clause)

52.236-4 PHYSICAL DATA (APR 1984)

Data and information furnished or referred to below is for the Contractor's information. The Government shall not be responsible for any interpretation of or conclusion drawn from the data or information by the Contractor.

(a) The indications of physical conditions on the drawings and in the specifications are the result of site investigations by personal investigation of in place facilities, photographs, and previous plans and drawings.

(b) Weather conditions: Please contact local weather authorities for an assessment of normal weather conditions for the time period covered by this contract requirement. One service available for weather information is located at : http://weather.noaa.gov/weather/AF_cc.html.

(c) Transportation facilities: Offerors should investigate the availability of road, rail and other transportation methods for the area concerned.

(End of clause)

SECTION 01010 SCOPE OF WORK

1. GENERAL

This project consists of the design and construction of a Facility of Higher Education (FoHE) facilities for the Ministry of Higher Education to instruct trainers of teachers, instruct teachers at the provincial level, and provide continuing education in order to upgrade teacher qualifications and standardize certification levels of teachers nationwide in Afghanistan. This is a classroom building and is considered an educational occupancy. Its function is to train future teachers in a classroom setting. Additional spaces are required for admin functions. In totality, the facility is designed for classroom and admin functions with incumbent toilet and utility spaces; there are no other functions. Design drawings, included as part of this solicitation package, are to be followed by the contractor, but shall not limit the contractor in design efforts. These drawings shall be further developed for complete building design and shall be site adapted requiring a unique site design that must be submitted to the government as part of the submittal and design process. Such site designs will include all utilities required for the facility. The project facility is defined as the design, material, labor, and equipment to construct buildings, utilities and other infrastructure for these Faculties of Higher Education (FHE). The work within this contract shall meet and be constructed in accordance with International Building Codes (IBC), NFPA-101 Life Safety Code, and applicable local standards. Any standard that can be determined to be substantially equivalent to the standards specified in this document may be used, but it is the Contractor's responsibility to show the equivalency of the alternate standard, and the Contracting Officer must approve its use. A partial listing of references is included herein. The contractor shall comply with the requirements of the contract and the Technical Requirements section 01015 for accomplishment of work within this scope. The contractor shall be responsible for demolitions of existing buildings, site grading and drainage plan, clearing and grubbing, and debris removal on each site as per the Technical Requirements of this contract. This is a site adapt project, the site is procured, the contractor is responsible for constructing the facility on the site and any required utilities that are further described within the RFP package.

1.1 English Language Requirement
All information shall be presented in English. The Contractor shall have a minimum of one English-speaking representative to communicate with the COR at all times when work is in progress.

1.2 Period of Performance
All work under this contract shall be completed within three hundred and sixty five **(365)** calendar days after notice to proceed (to include time required for government review of design submittals).

1.3 Submittals
The contractor shall design and construct the facilities mentioned herein in accordance to the contract requirements. The contractor shall be responsible for design and construction submittals**.** Submittals and a Submittal Register are required as specified in Section 01335 of the Basic Contract.

1.4 Cost Estimate
The contractor shall prepare a parametric construction cost estimate. The contractor shall prepare a thorough, well-supported, estimate reflecting the final design features, construction schedule and conditions, and any construction phasing requirements. The cost estimate shall be submitted as part of the submittals required for this contract.

1.5 CQM TRAINING REQUIREMENT: Before project design and construction begin, the Contractor's Quality Control Manager is required to have completed the U.S. Army Corps of Engineers CQM course, or equivalent. The Commercial Technical Training Center (CTTC), operated by the United Rehabilitation Bureau in Jalalabad, Afghanistan, provides a course that satisfies the requirement. Courses are offered at regular intervals. For enrollment and course information contact CTTC at the following:

1.5.A. Dr Pervez Mojadidi
Project Manager, United Rehabilitation Bureau
Email: adpzmuj@yahoo.com
Phone: (93) 0700-613-133, 0786489933

1.5.B. Engr. Said Wali Shinwari
Director, United Rehabilitation Bureau

Email: urb1992@yahoo.com
Phone: (93) 0700-287-626, 0797520380

1.5.C. USACE Guide Specification 01451, entitled “Contractor Quality Control”, 3.5.D. requires approval of the Contractor's CQC Plan. That approval is contingent upon the successful completion of this course by the Contractor’s Quality Control Manager.

A copy of the course completion certificate shall be included in the Design Analysis submittal.

2. LOCATION

Faculties of Higher Education building shall be constructed within the Afghanistan provinces on property owned by Provincial Department of Higher Education:

Kunduz,
Approximate GPS coordinates N 36.71118º E 68.86447º

Land ownership document for Kunduz University (Kunduz.LD.pdf) is attached.

Depth to water table approximately 20 meters – verify

3. UNEXPLODED ORDNANCE (UXO)

3.1 UXO Clearance

The contractor shall search, identify and clear all mines and unexploded ordnances (UXO’s) from the entire site. The contractor shall provide the government a letter indicating that the site is clear of mines and UXO’s and is available for construction operations to proceed. All mine and UXO clearing shall be done in accordance with the International Mine Action Standards (IMAS) and clearance shall be accomplished to the anticipated foundation depth. These standards can be found at http://www.mineactionstandards.org. Work will not commence in any area that has not been cleared. For any and all areas on or around the site, it is the responsibility of the Contractor to be aware of the risk of encountering mines and UXO’s and to take all actions necessary to assure a safe work area to perform the requirements of this contract. The Contractor assumes the risk of any and all personal injury, property damage or other liability, arising out of and resulting from any Contractor action hereunder. In any case the Contractor shall be responsible for identifying all mines and UXO’s within the entire site. Once the mines and UXO’s are identified, the Contractor shall place them in a location in accordance with IMAS. This work shall proceed in phases, concurrently with other construction efforts as determined by the contractor. If a UXO/mine is encountered after site clearance and during project construction, UXO/mine disposal shall be handled in accordance with Section 01015, Technical Requirements.

4. SUMMARY OF WORK

All requirements set forth in the Scope of Work, but not included in the Technical Requirements, shall be considered as set forth in both, and vice versa. Provide heating and ventilation for this facility. All toilets shall be eastern -style. All eastern-style toilets shall face North or South.

All standard construction amenities and details such as heating, lighting, site drainage, utility connections, etc. shall be implied as a design and construction requirement. Drawings referenced are contained in the appendix.

Design and Construct circulation pathways and exit stairs in accordance with building code references herein. Fire sprinkler system is not required. The facility shall comply with all other safety requirements as required within references. Smoke detectors and fire alarm systems shall be installed in accordance with requirements herein.

4.0.1 Bid Items (detailed in specifications section 00010 of this contract).

<u>Base Bid</u>
Survey

Design
As-built Drawings
Mobilization/Demobilization
Security Establishment and Sustainment
Education Building
Sewage Treatment
Water Well System
Handicap Ramp

Options to the Base Bid
UXO de-mining
Power Generation
Additional Structural Bay for Education Building (1st floor)
Additional Structural Bay for Education Building (2nd floor)
Standing Seam Roof

4.1 Contractor Requirements
The contractor shall design and construct the facilities as a design-build contract and in accordance with the requirements stated in Section 01015: TECHNICAL REQUIREMENTS. Refer to subsequent paragraphs for more specifics about required spaces. The design and construction work shall include, but not be limited to, that described herein. All requirements set forth in the Scope of Work, but not included in the Technical Requirements, shall be considered as set forth in both, and vice versa. Contractor shall design the FHE compound for a population based on a 40:1 student to educator ratio for the number of classrooms and laboratories being provided in the base bid plus any classrooms in awarded bid options. Additional staff requirements to be considered include 6 administrators and 10 miscellaneous staff. All utility systems shall be designed to accommodate the total facility population indicated above. All rooms shall be heated with electrical heaters and cooled by means of windows, ventilation fans, and ceiling fans.

4.1.1 Master Planning
The Contractor shall prepare a site Master Plan based on information contained in the Request for Proposal. The development of the master plan will include participation in a design charrette that will be conducted at the Corps of Engineers Headquarters Office in Kabul. As part of the site Master Plan, the contractor shall:

a. Perform a soil/geotechnical survey of each site accomplished by a geotechnical professional engineer.
b. Perform a site survey to include a topography survey noting all utilities, structures, obstacles, vegetation, and livestock on the site.
c. Provide a site grading and drainage plan. The grading plan shall show finished floor elevations no less than 200mm above finished grade and shall show grading away from all buildings at a 2% slope for 2.5m on all sides of the building.
d. Provide site cut and fill calculations and profiles of the buildings, water, and sanitary sewer.
e. All buildings and foundations shall have proper fill material and compacted to 95% proctor and CBR compaction tested.

4.1.2 Water System
Design a potable water system, to include a ground well water source, water well pump, and bladder type hydro-pneumatic tank, and underground pipe distribution system. Assume that the well shall be constructed to deliver a minimum 414 kPa (60 psi) at a flow rate of 36 lpm (9.5 gpm). The two hydro-pneumatic tanks shall provide for a capacity of 500 liters (132 gallons) each. The hydro-pneumatic tanks and distribution system shall be designed to provide a minimum 276 kPa (40 psi) at the second level at all points in the system. Minimum pressures of 207 kPa (30 psi), under peak domestic flow conditions, can be tolerated in small areas as long as all peak flow requirements can be satisfied. Maximum water pressures in distribution mains and service lines shall not exceed 517 kPa (60 psi) at ground elevation. Provide an enclosed water well house to contain the well hydro-pneumatic tanks and chlorination system.

Provide a hand pump backup well. This may be included in the casing with the electric pump or in a separate smaller well. The capacity for the hand pump does not need to meet daily usage requirements but should be designed to extract as much flow as possible.

4.1.3 Sanitary Sewer System

Sanitary sewer system shall consist of piping and a septic system. Septic system shall consist of a septic tank and drainage leach field which will be no less than 60 meters away from the water well. The sewage collection system and effluent disposal shall be designed to accommodate the building population using an average 190 liters per person per day. The septic system shall be gravity fed and shall use the natural topography of the site. A percolation test shall be performed to determine if it is feasible to put in a drain field. Contractor shall submit method for doing a percolation test. If percolation rates are not between 1 to 48 min/cm then the COR shall be notified for further direction. Measured percolation rates shall be used to design the system.

4.1.4 Site Electrical Distribution System

POWER SYSTEM: The contractor shall design a power system for supply and distribution to all buildings to include generator* with fuel storage (* only if the option is exercised), and underground electrical distribution. All electrical design and installation shall meet NEC (NFPA 70) requirements. Conductors and circuits shall be sized for the specific loads. If the power generation option is exercised, the power plant shall include a prime power generator, switchgear, and all appurtenances necessary to meet the electrical demand plus 25% spare capacity.

Contractor shall design all interior electrical systems as described in section 01015 Technical Requirements and shall design and install any required exterior lighting, as described in section 01015.

4.1.5 Power Generation System

GENERATORS: Contractor shall connect to local power grid where available. The power generation option, and the design and installation of generators, shall only be exercised where reliable power is not available locally 24 hours per day.

GENERATOR FUEL STORAGE: If the power generation option is exercised, the Contractor shall provide a design for low-profile fuel storage tanks that can accommodate a 30 day fuel supply based on the generator operating at 100% load.

4.1.6 Education Building (2 stories)

Construct a new reinforced concrete classroom facility with CMU in-fill walls and built-up roofing (with optional metal roof) as detailed on the plans in the appendix of this RFP. The function of the facility is solely classroom instruction and shall be designed as an educational occupancy.

4.1.7 Building Architectural Details (Note: specific details regarding room size and construction are shown on the drawings in the attached appendix of this RFP)

a. Provide classrooms with white boards and tack boards as indicated in the attached conceptual drawings. Classrooms are required for instruction.
b. Provide 4 Laboratory Classrooms. Provide lab counters with sinks as shown on the attached conceptual drawings. These lab classrooms are required for sciences, languages and computer applications.
c. Provide Archive- Library room as indicated in the attached conceptual drawings. Construct wood book shelves around all perimeter walls (both exterior and interior sides). Wood shelves shall be 1500 mm each unit, 1750 mm in height, each shelf fixed @ 350 mm spacing, each shelf max loading @ 20 kgs.
d. Provide storage rooms with steel or wood shelves as indicated in the attached conceptual drawings.
e. Provide separate latrine rooms for males and females as indicated in the attached conceptual drawings. All toilets shall face north and south for cultural reasons.
f. Provide office space for: 6 administrative staff and two private offices
g. Provide building entrance reception area.
h. Provide speaker intercom system for the building.

i. Provide electrical utilities room on both floors.
j. Provide fire protection measures (smoke detectors, extinguishers, fire rated walls, etc).
k. Base bid roof shall be a Built-up Roof. Roof section is concrete slab one-way sloped structure, slope pitch to be determined by contractor as part of the design based upon climatic and elevation conditions of each site to resist snow and rain/moisture intrusion. The concrete roof section shall be constructed via a built-up asphalt roofing membrane section. Optional bid item roof shall be standing seam as illustrated. Requirements for roofs are indicated in section 01015.
l. Provide a HDCP (handicap) concrete ramp to the second floor via one exterior stair (that is, on one side of the building). Maximum slope shall not exceed 12%. Ramp shall be 1500 mm width with walls (1100 mm height) and railings (865 mm AFF each side for railings). An intermediate landing is required between the first and second floors, sized at 1500 x 1500 mm. Landings (1500 x 1500 mm) are required at both first and second floors. Refer to Uniform Federal Accessibility Standards, available on the web, for exact requirements.

4.1.8 HVAC

Environmental control of the facilities shall be achieved by HVAC equipment proposed by the contractor and approved by the U.S. Government. See section 01015 for technical requirements. Note only heating and ventilation are required for this project; no air conditioning is required.

4.1.9 Demolition and Grading

Minor site demolition is required prior to construction of new work. Grading at the site is required and shall conform to requirements within references herein.

4.1.10 Life Safety

Design and Construct circulation pathways and exit stairs in accordance with building code references herein. Fire sprinkler system is not required. The facility shall comply with all other safety requirements as required within references. Smoke detectors and fire alarm systems shall be installed in accordance with requirements herein. The intent of the life safety is to provide sufficient protected exit pathways via one hour fire rated corridors for the occupants to exit the building in the event of a fire or other emergency. The contractor is to design this facility with personal life safety as the highest design objective.

4.1.11 Lighting

General lighting shall be provided as indicated and shall meet recommendations from IESNA for each building type and function within each building. Design and installation shall meet NEC 70 requirements.

Exterior lighting shall be high intensity discharge luminaries on 10 meter high minimum spun aluminum or galvanized steel poles. If to be installed on an existing installation, type of luminaries shall match existing predominant type within installation.

4.1.12 Electrical

All electrical design and installation shall meet NFPA 70 (NEC 2005) requirements. Electrical receptacles shall be provided as indicated. Conductors and circuits shall be sized for the specific loads. Secondary power shall be 380/220 Volts, 3-phase, 4 wire, 50 Hz.

4.1.13 Foundation Design

Foundations, including subgrade, shall be designed and constructed based on recommendations from geotechnical investigation required herein. Foundation shall be placed below the frost line depth as determined by the geotechnical report for each site.

4.2 Security Establishment and Sustainment

The Contractor shall provide GENERAL perimeter force protection security for developing the site. Security may include but is not limited to temporary fences and private security guards. Perimeter security shall prevent unauthorized site access and provide site protection to the contractor's work force and government personnel for the duration of the project in facing minor enemy attack. The Contractor shall provide a statement describing what measures, facilities and task force have included and for how long in corresponding to the price proposal Item of

"Security Establishment and Sustainment". The Contractor is responsible for providing security of the site; however, local police and ANA units should be coordinated to support the security of the site.

5. COMPLETION OF WORK
All work required under this contract shall be completed within three hundred and sixty five **(365)** calendar days from Notice to Proceed (NTP) for site work. Site work construction will not be allowed to proceed until demining is complete or until sufficient engineering analysis and plans have been produced by the contractor and the government has granted clearance. Liquidated damages in the amount of $1700.00 for every calendar day of delay shall be assessed and charged to the Contractor.

6. REFERENCES
Refer to Section 01015 for required references.

-- End of Section --

SECTION 01015 TECHNICAL REQUIREMENTS

1. GENERAL

1.1 The Contractor shall site design and construct the education facilities in accordance with the design-build contract and shall comply with technical requirements contained herein. The Contractor shall provide design and construction using the best blend of cost, construction efficiency, system durability, ease of maintenance and environmental compatibility. The contractor shall demolish and remove any and all existing structures and debris on the site prior to construction.

1.2 ASBESTOS CONTAINING MATERIALS
Asbestos containing material (ACM) shall not be used in the design and construction of this project. If no other material is available which will perform the required function or where the use of other material would be cost prohibitive, a waiver for the use of asbestos containing materials must be obtained from the Contracting Officer. ACM is defined as containing more than 1% ACM by weight.

1.3 SAFETY

1.4.1 Unexploded Ordnance (UXO)
It is the responsibility of the Contractor to be aware of the risk of encountering UXO/mines and to take all actions necessary to assure a safe work area to perform the requirements of this contract. If during construction, the contractor becomes aware of or encounters UXO/mines or potential UXO/mines, the contractor shall immediately notify the COR, mitigate any delays to scheduled or unscheduled contract work, and clear/remove the UXO/mines. The contractor may only provide clearance/removal services via UN MAC accredited entities. Clearance/removal may only be undertaken in accordance with IMAS. The Contractor assumes the risk of any and all personal injury, property damage or other liability arising out of or resulting from any Contractor action taken hereunder.

Scrap metal shall be the property of the Host Government. The scrap metal on site shall be moved to an area away from the site perimeter as directed by the Contracting Officer's Representative and left for the Host Government to remove and/or salvage.

NOTE: For previous UXO/mine information, the following points of contact from the UN Mine Action Center of Afghanistan are provided:

Mohammad Sediq, Chief of Operations,
Email: sediq@unmaca.org

Cell: +93 070 295207

Hansie Heymans, Chief Information Officer,
Email: hansie@unmaca.org
Cell: +93 070 294286

1.4.1.1 Explosives Safety

1.4.1.1.1 General Safety Considerations

General safety considerations applicable to personnel, both essential and non-essential, at project sites where UXO may be encountered include:

a. Do not carry fire or spark-producing devices.
b. Do not conduct explosive or explosive-related operations without approved procedures and proper supervision and UXO safety support.
c. Do not become careless by reason of familiarity with UXO or the reported probability level of UXO contamination.
d. Do not conduct explosive or potentially explosive operations during inclement weather.
e. Avoid contact with UXO except during UXO clearance operations.
f. Conduct UXO-related operations during daylight hours only.
g. Employ the "buddy system" at all times.

1.4.1.1.2 Activity Hazard Analysis (AHA) briefings

a. Activity Hazard Analysis's shall be prepared in accordance with the Corps of Engineers Safety and Health Requirements Manual, EM 385-1-1.

b. Hazard analyses will be prepared and briefed by personnel that are knowledgeable in UXO and explosives safety standards and requirements. These personnel should understand the specific operational requirement and hazard analysis methodologies. A hazard analysis will be performed for each activity to determine the significance of any potential explosive-related hazards. Explosive residues may be discovered or exposed during UXO operations in the form of powder or various granular and powder based pellets. These contaminants can enter the body through the skin or by ingestion if proper personal hygiene practices are not followed. Explosive fillers such as white phosphorus are dangerously reactive in air and acute exposure can result in serious injury to the skin, eyes, and mucous membranes. They are also a fire hazard.

Safety requirements (or alternatives) that will either eliminate the identified hazards, mitigate or control them to reduce the associated risks to an acceptable level will be developed. The adequacy of the operational and support procedures that will be implemented to eliminate, control, or abate identified hazards or risks will then be evaluated and a second risk assessment completed to verify that a satisfactory safety level has been achieved.

1.4.1.2 Notification of Noncompliance

The Contracting Officer will notify the Contractor of any detected noncompliance with the foregoing requirements. The Contractor shall take immediate corrective action after receipt of such notice. Such notice, when delivered to the Contractor at the work site, shall be deemed sufficient for the purpose of notification. If the Contractor fails or refuses to comply promptly, the Contracting Officer may issue an order stopping all or part of the work until satisfactory corrective action has been taken. The Contractor shall make no part of the time lost due to such stop orders the subject of claim for extension of time or for excess costs or damages.

1.4 LIMITATION OF WORKING SPACE

The Contractor shall, except where required for service connections or other special reason(s), confine his operations strictly within the boundaries of the site. Workmen will not be permitted to trespass on adjoining property. Any operations or use of space outside the boundaries of the site shall be by arrangement with all interested parties. It must be emphasized that the Contractor must take all practical steps to prevent his workmen from entering adjoining property and in the event of trespass occurring the Contractor will be held entirely

responsible.

Areas located immediately outside the construction area might contain mines and unexploded ordnance (UXO). Contractors assume all risks when venturing in or out of the designated work area.

1.5 TEMPORARY STRUCTURES

The Contractor shall erect suitable temporary fences, lighting, and necessary structures to safeguard the site, materials and plant against damage or theft and for the protection of the general public and shall adequately maintain the same throughout the course of the contract.

1.6 SUBCONTRACTORS

Compliance with the provisions of this section by subcontractors will be the responsibility of the contractor.

1.7 LIST OF CODES AND TECHNICAL CRITERIA:

The following codes and technical criteria and those referenced therein shall be required for this project. References within each reference below shall be required and adhered to. This list is not exhaustive and is not necessarily complete.

AABC - Associated Air Balance Council (National Standards for total System Balance)
ACI 318 Building Code Requirements for Structural Concrete (latest edition), American Concrete Institute
American Water Works Association, ANSI/AWWA C651-99 standard
ARI - Air Conditioning and Refrigeration Institute
ASCE 7-02, Minimum Design Loads for Buildings and Other Structures, 2002
ASHRAE Standard 55-2004, Thermal Environmental Conditions for Human Occupancy
ASHRAE Standard 62.1-2004, Ventilation for Acceptable Indoor Air Quality
ASME - American Society for Mechanical Engineering
ASTM - American Society for Testing and Materials
EIA ANSI/TIA/EIA-607: (1994) Commercial Building Grounding/Bonding Requirement Standard.
Factory Mutual (FM) Approval Guide-Fire Protection (2002).
IBC - International Building Codes, 2006 (and its referenced codes including those inset below):
  IMC – International Mechanical Code
  IPC – International Plumbing Code
Lighting Handbook, IESNA, latest edition
National Electrical Safety Code (NESC), Institute of Electrical and Electronic Engineers (IEEE C2), 2002 edition
NFPA 10, Portable Fire Extinguishers, 2002 edition
NFPA 70, National Electrical Code, 2005 edition
NFPA 72, National Fire Alarm Code, 2002 edition
NFPA 75, Standard for the Protection of Information Technology Equipment
NFPA 80, Standard for Fire Doors and Other Opening Protectives, 2007 edition
NFPA 101, Life Safety Code, 2006 edition
NFPA 110, Standard for Emergency and Standby Power Systems, 2005 edition
Plumbing and Drainage Institute (PDI-WH-201) water hammer arrestors
International Mine Action Standards, latest edition; (see http://www.mineactionstandards.org for copy of standards)
TM 5-805-4 Noise and Vibration
UFC 1-200-01, Design: General Building Requirements, 20 June 2005
UFC 1-300-07A Design Build Technical Requirements
UFC 3-230-03a, Water Supply, 16 Jan 2004
UFC 3-230-04a, Water Distribution, 16 Jan 2004
UFC 3-230-08a, Water Supply: Water Treatment, 16 Jan 2004
UFC 3-230-09a, Water Supply: Water Storage, 16 Jan 2004
UFC 3-230-10a, Water Supply: Water Distribution, 16 Jan 2004
UFC 3-230-13a, Water Supply: Pumping Stations, 16 Jan 2004
UFC 3-230-17FA, Drainage in Areas Other than Airfields, 16 Jan 2004
UFC 3-240-04a, Wastewater Collection, 16 Jan 2004

UFC 3-240-07FA, Sanitary and Industrial Wastewater Collection-Gravity Sewers and Appurtenances
UFC 1-300-09N, Design Procedures, 25 May 2005
UFC 3-310-01, Structural Load Data, 25 May 2005
UFC 3-501-03N, Electrical Engineering Preliminary Considerations, 16 Jan 2004
UFC 3-520-01, Interior Electrical Systems, 10 June 2002
UFC 3-530-01AN, Design: Interior and Exterior Lighting and Controls, 19 Aug 2005
UFC 3-540-04N Design: Diesel Electric Generating Plants, 16 Jan 2004
UFC 3-550-03FA Design: Electrical Power Supply and Distribution Systems, 1 Mar 2005
UFC 3-600-01, Design: Fire Protection Engineering for Facilities, 26 Sept 2006
UFC 4-010-01, Design: Minimum DoD Antiterrorism Standards for Buildings, 22 Jan 2007
UFC 4-010-02, DoD Minimum Antiterrorism Standoff Distances for Buildings, 19 Jan 2007
UFC 4-020-04FA, Electronic Security Systems: Security Engineering, 1 Mar 2005
UFC 4-021-01, Design and O&M: Mass Notification Systems, draft 1 May 2006
UFC 3-580-01 Telecommunications Building Cabling Systems Planning and Design
Underwriters' Laboratories (UL) Fire Protection Equipment Directory (2002)
UL Standards (as applicable)
UL 752, Bullet Resisting Equipment, 2000 or later
USCINCCENT OPORD 97-1

The publications to be taken into consideration shall be those of the most recent editions. Standards other than those mentioned above may be accepted if the standards chosen are internationally recognized and meet the minimum requirements of the specified standards. The Contractor shall be prepared to submit proof of this if requested by the Contracting Officer.

2. SITE DEVELOPMENT:

2.1 GENERAL
The project includes furnishing all materials, equipment and labor for designing, constructing site grading, water, and sanitary sewer.

2.2 ENVIRONMENTAL PROTECTION

2.2.1 Applicable regulations
The Contractor shall comply with all Host Nation laws, rules, regulations or standards concerning environmental pollution control and abatement with regard to discharge of liquid waste into natural streams or manmade channels. The contractor shall review host nation and U.S. Government environmental regulations with the contracting officer prior to design and discharge of any liquid wastes into natural streams or manmade channels.

2.2.2 Notification
The Contracting Officer will notify the Contractor in writing of any observed non-compliance with the foregoing provisions. The Contractor shall immediately take corrective action. If the Contractor fails or refuses to promptly take corrective action, the Contracting Officer may issue an order stopping all or part of the work until satisfactory corrective action has been taken. No extension of time or damages will be awarded to the Contractor unless it was later determined that the Contractor was in compliance.

2.2.3 Spillages
Measures shall be taken to prevent chemicals, fuels, oils, greases, bituminous materials, waste washings, herbicides and insecticides, and construction materials from polluting the construction site and surrounding area.

2.2.4 Disposal
Disposal materials, wastes, effluents, trash, garbage, oil, grease, chemicals, etc., shall be taken to a dumpsite off site and subject to the approval of the Contracting Officer. Burning at the project site for the disposal of refuse and debris will not be permitted.

2.3 CIVIL SITE DEVELOP\MENT

2.3.1 Site Plan

The contractor shall locate the facilities in general agreement with the requirements in the Scope of Work 01010. All buildings, roads, parking areas, entry control points, walls, fences, utility structures, and other site features shall be clearly defined and dimensioned on the site Master Plan. The contractor shall perform and provide a geotechnical survey and topographic survey of the site and adapt the facilities in accordance to the topographic data. The contractor shall use the natural grade as much as possible when designing and constructing the gravity sanitary sewer system.

The site plan shall show geometric design of the site, including applicable dimensions of all exterior facilities, mechanical equipment, utilities, etc. Required facilities are described in the following sections of this specification.

All site plans and site master plans shall be drawn in the following projection and datum for incorporation into the U.S. Army Corps of Engineers GIS system:

WGS 1984 UTM Zone 42 N

2.3.2 Demolition

Demolition shall include removal of all structures, foundations, pavements, and utilities, and clearing and grubbing. All refuse and debris shall be disposed of off site. Holes and depressions shall be backfilled. Fill materials shall be composed of satisfactory soils or aggregates defined in ASTM D 2487 as GW, GP, GM, SP, SM, SW, CL-ML. Minimum soil compaction shall be 95 percent of maximum density as defined in ASTM D 1557.

2.3.3 Grading and Drainage

The contractor will provide all necessary site grading to insure adequate drainage so that no areas will be flooded due to a rainfall of a 10-year frequency. Drainage of the area should be compatible with the existing terrain. Building floor elevation shall be a minimum 200mm above grade and slope away from the building on all sides at a minimum of 2% for 2.5 meters.

2.3.3.1 Site Grading Plan and Storm Water Drainage

The contractor shall design a site grading plan that provides positive drainage and minimizes the requirement for major structures in a cost effective manner.

2.3.4 Civil Utilities

2.3.4.1 General

The design of the water and sanitary systems shall be sized to provide flow and discharge based on a fixture unit basis. The design drawings shall show all utility lines, line sizes, valves, manholes, disinfection systems, and applicable details associated with water and sanitary system designs. Specifications covering water lines, valves, pumps, controls, sanitary sewers and storm sewers shall be submitted as part of the design and shall require standard materials that are available in-country. Contractor shall install and connect exterior sanitary sewer collection and water supply piping to service connection points of each facility requiring such.

2.3.4.2 Water

2.3.4.2.1 General Water

Design and construction shall serve the demand. The Contractor shall install water service connections to include all pipe, valves, fittings and appurtenances. The required Average Daily Demand (ADD) is described in the Scope of Work Section 01010. In the event potable or non-potable use water is required prior to completion of the water facilities infrastructure the Contractor may be issued a Request for Proposal to provide non-potable (tank truck) and potable (bottled or other reliable source) consumption. Provide a minimum of one (1) outside water hydrant (hose spigot) per building to be used for landscaping purposes. Provide freeze protection measures for water supply lines.

2.3.4.3 Well

The well shall be constructed in accordance with AWWA A100 Water Wells. Well shall be installed to prevent

aquifer contamination by the drilling operation and equipment, intra- and inter-aquifer contamination, and vertical seepage of surface water adjacent to the well into the subsurface, especially the well intake zone.

2.3.4.3.1 Capacity Test

The Contractor shall furnish and install an approved temporary test pump, with discharge piping of sufficient size and length to conduct the water being pumped to point of discharge, and equipment necessary for measuring the rate of flow and water level in the well. An 8 hour step-drawdown capacity test shall be run with the pumping rate and drawdown at the pump well and observation wells recorded every 1/2 minute during the first 5 minutes after starting the pump; then every 5 minutes for an hour; then every 20 minutes for 2 hours. From this point on, readings taken at hourly intervals, until the water level stabilizes, shall be sufficient. Observation wells (existing well) shall be read on the same schedule as the pump well. During the step-drawdown test, the pumping rate shall be increased in steps at 2 hour intervals. Specific capacity shall be measured for each step. The well shall be "step" tested at rates of approximately 1/2, 3/4, 1 and 1 ½ times the design capacity of 137 gpm. When the pump is shut off, water level readings shall be taken during the rebound period for the same intervals of time as the drawdown test. The record of the test, in triplicate, shall be delivered to the Contracting Officer.

2.3.4.3.2 Water Quality Sampling and Analysis

The Contractor shall perform water quality sampling and testing at the source. The Contractor shall utilize well-qualified and equipped testing capability in the project site area, if available. If professional testing services are not available in the area, the Contractor will submit an alternative practical testing source for approval. Raw water quality criteria for Water Quality and Criteria Standards, and shall address the following: PH, turbidity, conductivity, oxidation reduction potential, total dissolved solids, color, odor, total coliform/fecal coliform (bacteria) an indicator of the presence of E. coli. These baseline parameters are a partial list as presented in TM5-813-3/AFM 88-10 APPENDIX A.

2.3.4.3.3 Well House

At new well, construct a permanent well house with concrete slab floor. The floor of the well house shall slope away from the casing approximately 3 mm per 300 mm (1/8” per foot) and drain to the outside. Floor of well house shall be above flood plain. The well house design should be such that the well pump, motor and drop pipe could be removed readily and accessible via an insulated and lockable roof hatch above. Provide a small window for natural light located high up on the room. The entry door shall be lockable and insulated and made of metal with a metal frame. The well house shall protect valves, hydropneumatic tanks and pumping equipment plus provide freeze protection for the pump discharge piping beyond the check valve. The well house shall be insulated and a heating unit installed. The well shall be protected from unauthorized use by a chain-link security fence with lockable gate. Provide outriggers, barbed wire and concertina wire on fence and gate.

2.3.4.3.4 Raw Water Disinfection

Contractor shall perform disinfection of the well water in accordance with AWWA A 100 or equivalent. Bacteriological samples shall be collected and examined in accordance with Standard Methods for the Examination of Water and Wastewater by a qualified lab as approved by the Contracting Officer.

2.3.4.3.5 Water Filtration

The Contractor shall install an in-line, fully automatic, self-cleaning, sediment filtration unit. The filter shall be able to meet or exceed applicable standards for water quality. The Contractor shall install and use filtration unit in accordance with manufacturer’s recommendations.

2.3.4.3.6 Hydro-pneumatic Storage Tank

The Contractor shall provide two 500 liter bladder type hydro-pneumatic expansion tanks. The storage facility shall be located above drainage areas and locations subject to flooding as approved by the Contracting Officer.

2.3.4.3.7 Disinfection & Chlorination System

Use hypochlorite compounds for disinfection. A hypo-chlorinator shall be used to feed a sodium hypochlorite solution of 5-15% available chlorine into the system. Hypochlorite compound may be a liquid or solid form. The hypo chlorination system shall consist of a chemical solution tank for hypochlorite, diaphragm-type pump, power supply, water pump, pressure switch and storage tank (optional hydro-pneumatic/storage). The pump shall feed a

hypochlorite solution in proportion to the water demand. The hypo-chlorinator shall have a pumping rate, liters per day (lpd) (gallons per day (gpd)) adequate to deliver 5 percent (%) available hypochlorite solution adjustable to the quantity of water being produced from the source. Dosage rate will vary somewhat depending on actual pump production rate and available residual chlorine in the system. Contractor shall determine the required dosage rate milligrams per liter (mg/l) to maintain the required chlorine residual (usually 0.2-0.4mg/l) in the distribution system. Chlorine solution tank shall be large enough to hold a three days supply of hypochlorite solution. A fresh solution shall be prepared every two or three days because the solution may lose its strength over time and this will affect the actual chlorine feed rate. The hypochlorite shall be stored in a cool dry place. Sodium hypochlorite can lose from two to four percent of its available chlorine content per month at room temperature. Contractor shall verify required minimum residual chlorine in accordance with local requirements verified and approved by the Contracting Officer. The chlorination system shall have the capability for manually adjusting the dosage rate and be installed in such a manner that the system can be easily disconnected and bypassed in the event of health safety or routine maintenance and repair. Disinfection of water mains shall be in accordance with AWWA standard C651-86 and disinfection of storage facilities in accordance with AWWA standard C652-86.

2.3.4.3.8 Chlorine Shelter

Contractor shall furnish a shelter as per chlorine manufacturer's installation requirements. The Contractor shall provide manufacturers catalog information and shop drawing to the Contracting Officer for approval.

2.3.4.4 Water Distribution System

2.3.4.4.1 General

The Contractor shall provide a water distribution system described as follows: Pipe diameters used in the network shall be as calculated, using ductile iron (DI) conforming to AWWA C151, installed in accordance with C 600 or polyvinyl chloride (PVC) as per ASTM D 1784 and 1785. All pipes and joints shall be capable of at least 1.03 Mpa (150 psi) and 1.38 (200psi) hydrostatic test pressure unless otherwise specified. Pipes should be adequate to carry the maximum quantity of water at acceptable velocities 0.9 to 1.5m/sec (3 to 5 ft/sec) at maximum flows not to exceed 2.8m/sec (9.2ft/sec) with working pressures of 240kPa (35psi) to 350kPa (50psi). **Minimum pressure shall be 276kPa (40psi) to** all points of the distribution system and **maximum pressure shall be 517kPa (60psi)**. Pipe service connections from the distribution main to the building shall be either Polyvinyl Chloride (PVC) plastic Schedule 80 ASTM D 1785 or copper tubing conforming to ASTM B 88M, Type K, annealed. After choosing piping material type, use similar piping materials for all buildings for efficiency of future maintenance activities. Water supply distribution shall connect to a building service at a point approximately 1.5m (5 feet) outside the building or structure to which the service is required. Adequate cover must be provided for frost protection. A minimum cover of 800mm (2'-8") is required to protect the water distribution system against freezing. Water lines less than 1.25 meters (4 feet) deep under road crossings shall have a reinforced concrete cover of at least 150 mm (6 inch) thickness around the pipe.

2.3.4.4.2 Pipe

2.3.4.4.2.1 The Contractor shall provide pipe of adequate strength, durability and be corrosion resistant with no adverse effect on water quality. The exterior surface of the pipe must be corrosion resistant. If the pipe is installed underground pipe shall be encased with polyethylene in accordance with AWWA C105. Water distribution pipe material shall be PVC or Ductile Iron (DI). Ductile iron pipe shall conform to AWWA C104, et al. DI fittings shall be suitable for 1.03MPa (150psi) pressure unless otherwise specified. Fittings for mechanical joint pipe shall conform to AWWA C110. Fittings for use with push-on joint pipe shall conform to AWWA C110 and C111. Fittings and specials shall be cement mortar lined (standard thickness) in accordance with C104. Polyvinyl Chloride (PVC) pipe shall conform to ASTM D 1785. Plastic pipe coupling and fittings shall be manufactured of material conforming to ASTM D 1784, Class 12454B. PVC screw joint shall be in accordance with ASTM D 1785, etal, Schedules 40, 80 and 120. PVC pipe couplings and fittings shall be manufactured of material conforming to ASTM D 1784, Class 12454B. Pipe less than 80mm (3 inch) screw joint, shall conform to dimensional requirements of ASTM D schedule 80. Elastomeric gasket-joint, shall conform to dimensional requirements of ASTM D 1785 Schedule 40, All pipe and joints shall be capable of 1.03 Mpa (150psi) working pressure and 1.38 Mpa (200psi) hydrostatic test pressure. Pressure water lines crossing roads or parking areas shall be encased in concrete for a distance of 2.7m on each side of the road or parking lot crossing.

2.3.4.4.2.2 Hydrostatic, Leakage and Disinfection tests

The Contracting Officer will be notified not less than 48 hours in advance of any water piping test and will be given full access for monitoring testing procedures and results. Where any section of water line is provided with concrete thrust blocking for fittings or hydrants tests shall not be made until at least 5 days after installation of the concrete thrust blocking, unless otherwise approved.

2.3.4.4.2.3 Pressure Test

After the pipe is laid, the joints completed, and the trench partially backfilled leaving the joints exposed for examination, the newly laid piping or any valved section of piping shall, unless otherwise specified, be subjected for 1 hour to a hydrostatic pressure test of 1.03 MPa (150 psi). Each valve shall be opened and closed several times during the test. Exposed pipe, joints, fittings, hydrants and valves shall be carefully examined during the partially opened trench test. Joints showing visible leakage shall be replaced or remade as necessary. Cracked or defective pipe, joints, fittings, hydrants and valves discovered following this pressure test shall be removed and replaced and retested until the test results are satisfactory.

2.3.4.4.2.4 Leakage Test

Leakage test shall be conducted after the pressure tests have been satisfactorily completed. The duration of each leakage test shall be at least 2 hours and during the test the water line shall be subjected to not less than 1.03 MPa (150psi). Leakage is defined as the quantity of water to be supplied into the newly laid pipe, or any valved or approved section, necessary to maintain pressure to within 34.5kPa (5 psi) of the specified leakage test pressure after the pipe has been filled with water and the air expelled. Pipe installation will not be accepted if leakage exceeds the allowable leakage, which is determined by the following formula:

L = 0.0001351ND (P raised to 0.5 power) L = Allowable leakage in gallons per hour N = Number of joints in the length of pipeline tested D = Nominal diameter of the pipe in inches P = Average test pressure during the leakage test, in psi gauge

Should any test of pipe disclose leakage greater than that calculated by the above formula, the defective joints shall be located and repaired until the leakage is within the specified allowance, without additional cost to the government.

2.3.4.4.3 Bacteriological Disinfection

2.3.4.4.3.1 Disinfection Procedure

Before acceptance of potable water operation, each unit of completed waterline shall be disinfected as prescribed by AWWA C651. After pressure tests have been completed, the unit to be disinfected shall be thoroughly flushed with water until all entrained dirt and mud have been removed before introducing the chlorinating material. Flushing will be performed in a manner and sequence that will prevent recontamination of pipe that has previously been disinfected. The chlorinating material shall be liquid chlorine, calcium hypochlorite, or sodium hypochlorite. The chlorinating material shall provide a dosage of not less than 50 ppm and shall be introduced into the water lines in an approved manner. Polyvinyl Chloride (PVC) pipelines shall be chlorinated using only the above-specified chlorinating material in solution. The agent shall not be introduced into the line in a dry solid state. The treated water shall be retained in the pipe long enough to destroy all non-spore forming bacteria. Except where a shorter period is approved, the retention time shall be at least 24 hours and shall produce not less than 25 ppm of free chlorine residual throughout the line at the end of the retention period. Valves on the lines being disinfected shall be opened and closed several times during the contact period. The line shall then be flushed with clean water until the residual chlorine is reduced to less than 1.0 ppm.

2.3.4.4.3.2 Sampling

For each building connected to the water system, personnel from the Contractor's commercial laboratory shall take at least 3 water samples from different points, approved by the Contracting Officer, in proper sterilized containers and perform a bacterial examination in accordance with approved methods. The commercial laboratory shall be verified to be qualified by the appropriate authority for examination of potable water.

2.3.4.4.3.3 Acceptance Requirements

The disinfection shall be repeated until tests indicate the absence of pollution for at least 2 full days. The unit will not be accepted until satisfactory bacteriological results have been obtained.

2.3.4.4.4 Time for making Tests

Except for joint material setting or where concrete thrust blocks necessitate a 5-day delay, pipeline jointed with rubber gaskets, mechanical or push-on joints, or couplings may be subjected to hydrostatic pressure, inspected and tested for leakage at any time after partial completion of backfill.

2.3.4.4.5 Concurrent Tests

The Contractor may elect to conduct the hydrostatic tests using either or both of the following procedures. Regardless of the sequence of tests employed, the results of pressure tests, leakage tests, and disinfection shall be recorded for submission and approval. Replacement, repair or retesting required shall be accomplished by the Contractor at no additional cost to the Government.

a. Pressure test and leakage test may be conducted concurrently,

b. Hydrostatic tests and disinfection may be conducted concurrently, using water treated for disinfection to accomplish the hydrostatic tests. If water is lost when treated for disinfection and air is admitted to the unit being tested, or if any repair procedure results in contamination of the unit, disinfection shall be re-accomplished.

2.3.4.4.6 Valves

Valves (Gate valves w/box) shall be placed at all pipe network tee and cross intersections and the number of valves shall be one less than the number of lines leading into and away from the intersection. For isolation purposes valves shall be spaced not to exceed 3600 mm (12 feet). Gate valves shall be in accordance with AWWA C 500 and/or C509. Butterfly valves (rubber seated) shall be in accordance with C504 etal. The valves and valve boxes shall be constructed to allow a normal valve key to be readily used to open or close the valve. Provide traffic-rated valve boxes. Provide concrete pad, 1 meter (3'-4") square, for all valve boxes.

2.3.4.4.7 Vacuum and Air Release Valves

Air release valves are required to evacuate air from the main high points in the line when it is filled with water, and to allow the discharge of air accumulated under pressure. Vacuum relief valves are needed to permit air to enter a line when it is being emptied of water or subjected to vacuum. Contractor shall submit manufacturer's data for properly sized combination air and vacuum release valves and determine their locations on the distribution system subject to review and approval of the Contracting Officer.

2.3.4.4.8 Blow-Off Valves

The Contractor shall provide 40-50mm (1-5/8" – 2") blow-off valves at ends of dead end mains. Valves should be installed at low points in the mains where the flushing water can be readily discharged to natural or manmade drainage ditches, swales or other.

2.3.4.4.9 Thrust Blocking

Contractor shall provide concrete thrust blocking at any point where the layout of the system changes the direction of the flow, increases the velocity, or decreases or stops the flow. At these points, the pipes and fittings must be anchored and kept from moving or pulling apart by the use of thrust blocks installed against undisturbed earth.

2.3.4.5 Sanitary Sewer

2.3.4.5.1 General

The Contractor shall use the surveyed topographic information that show vegetation, drainage channels and other land surface features such as underground utilities and related structures that may influence the design and layout of the collection system. The sanitary sewer shall be gravity fed sewer lines. Sanitary sewers less than 1.25 meters (4 feet) under road crossings shall have reinforced concrete cover at least 150 mm (6 inch) thick around the pipe.

Exterior sanitary sewer line construction shall include service to the building as described in the Scope of Work Section 01010. Contractor shall design sanitary sewer collection, treatment system using approved field survey data and finished floor elevations. Main collection sewers will follow the most feasible route to the point of discharge. The sewer collection, treatment system shall be designed to accommodate the initial occupancy and a reasonable expansion capability. All sewers shall be located outside of the roadways as much as practical, and minimize the number of roadway crossings. To the extent practical, a sewer from one building shall not be constructed under another building, or remain in service where a building is subsequently constructed over it. Construction required shall include appurtenant structures and building sewers to points of connection with building drains 1.5m (5 feet) outside the building to which the sewer collection system is to be connected.

The Contractor shall use the following criteria where possible to provide a layout which is practical, economical and meets hydraulic requirements: 1) Follow slopes of natural topography, 2) avoid routing sewers through areas which require extensive restoration or underground demolition, 3) Avoid areas of high groundwater and placement of sewer below the groundwater table, 4) locate manholes at change in direction, size or slope of gravity sewers, 5) use straight sections between manholes, curved alignment shall not be permitted 6) avoid placing manholes where the tops will be submerged or subject to surface water inflow, 7) evaluate alternative sewer routes where applicable, 8) verify that final routing selected is the most cost effective alternative that meets service requirements. In the event that facilities to be provided under the contract must be occupied prior to completion of permanent wastewater infrastructure, the Contractor will be responsible for providing temporary portable shower and bathroom facilities.

2.3.4.5.2 Protection of Water Supplies
The Contractor shall ensure that the sewer design meets the following criteria:

2.3.4.5.3 Sanitary sewers shall be located no closer than 60m (197 feet) horizontally to water wells or reservoirs to be used for potable water supply.

2.3.4.5.4 Sanitary sewers shall be no closer than 3 m (10 feet) horizontally to potable water lines; where the bottom of the water pipe will be at least 300mm (12 inches) above the top of the sanitary sewer, horizontal spacing shall be a minimum of 1.8 m (6 feet).

2.3.4.5.5 Sanitary sewers crossing above potable water lines shall be constructed of suitable pressure pipe or fully encased in concrete for a distance of 2.7m (9 feet) on each side of the crossing. Pressure pipe will be as required for force mains in accordance with local standards and shall have no joint closer than 1 meter (3 feet) horizontally to the crossing, unless the joint is encased in concrete.

2.3.4.5.6 Sanitary sewer crossing roads or parking areas shall be encased in concrete for a distance of 2.7m on each side of the road or parking lot crossing. Pressure pipe will be as required for force mains in accordance with local standards and shall have no joint closer than 1 meter (3 feet) horizontally to the crossing, unless the joint is encased in concrete.

2.3.4.5.7 Quantity of Wastewater
The sewage collection system and effluent disposal shall be designed to accommodate the building population using an average 190 liters per person per day. Design criteria guideline shall be based on average influent wastewater characteristics as BOD of 400mg/l, SS of 400mg/l, BOD load of 750ppd, and SS load of 750ppd.

2.3.4.5.8 Gravity Sewer
Sanitary sewers shall be designed to flow at a maximum of 90 to 95 percent full. Sanitary sewer velocities shall be designed to provide a minimum velocity of 0.6 meters per second (mps) or 2.0 feet per second (fps) at the ADD flow rate and a minimum velocity of 0.8 to 1.05 mps (2.5-3.5fps) at the peak diurnal flow rate. In no case shall the velocity drop below 0.3 mps, (1.0 fps) to prevent settlement of organic solids suspended in the wastewater. Pipe slopes shall be sufficient to provide the required minimum velocities and depths of cover on the pipe. Unless otherwise indicated (see Building Connections and Service Lines), gravity sewer pipe shall be installed in straight and true runs in between manholes with constant slope and direction. Adequate cover must be provided for frost protection. A minimum cover of 800 mm (2’-8”) will be required to protect the sewer against freezing.

2.3.4.5.9 Manholes

The Contractor shall provide standard depth manholes (MH), (depth may vary) an inside dimension of 1.2 meters (4 feet). Manholes shall be made of cast-in-place reinforced concrete with reinforced concrete cover. Alternate pre-cast manhole option shall taper to a 750 mm (30-inch) cast iron frame that provides a minimum clear opening of 600 mm (24 inches). In every case, the manholes, frames and covers shall be traffic rated, H-20 load rating. All manholes shall be provided with a concrete bench with a flow line trough, smoothly formed to guide waste flow to the outlet pipe from the inlet pipe(s). The top surface of the bench shall be above the crown of all pipes within the manhole. All surfaces of the bench shall be sloped smoothly toward the trough to guide flow, even under peak flow conditions.

2.3.4.5.9.1 Manhole Design Requirements

Manholes are required at junctions of gravity sewers and at each change in pipe direction, size or slope, except as noted hereinafter for building connections.

2.3.4.5.9.2 Spacing

The distance between manholes must not exceed 120 m (400 ft) in sewers of less than 460 mm (18 inches) in diameter. For sewers 460 mm (18 inches) and larger, and for outfalls from wastewater treatment facilities, a spacing of up to 180 m (600 ft) is allowed provided the velocity is sufficient to prevent the sedimentation of solids.

2.3.4.5.9.3 Pipe Connections

The crown of the outlet pipe from a manhole shall be on line with or below the crown of the inlet pipe.

2.3.4.5.9.4 Frames and Covers

Frames and covers shall be cast iron, or ductile iron, traffic rated in either case to an H-20 load rating. Cast iron frames and covers shall be traffic rated, circular with vent holes.

2.3.4.5.9.5 Steps for Manholes

Steps shall be cast iron, polyethylene coated, at least 15 mm (5/8 inch) thick, not less than 400mm (16 inches) in width, spaced 300 mm (12 inches) on center.

2.3.4.5.10 Pipe

Pipe shall conform to the respective specifications and other requirements as follows: Provide Polyvinyl Vinyl Chloride (PVC) conforming to ASTM D 3034, Type PSM with a maximum SDR of 35, size 380 mm (15inch) or less in diameter. PVC shall be certified as meeting the requirements of ASTM D 1784, cell Class 12454 B.

2.3.4.5.10.1 Fittings

Fittings shall be compatible with pipe supplied and shall have a strength not less than that of the pipe. Fittings shall conform to the respective specifications and requirements as follows: provide PVC fittings conforming to ASTM D 3034 for type PSM pipe.

2.3.4.5.10.2 Joints

Joints installation requirements shall comply with the manufacturers installation instructions. Flexible plastic pipe (PVC or high density polyethylene pipe) gasketed joints shall conform to ASTM D3212.

2.3.4.5.10.3 Branch Connections

Branch connections shall be made by use of regular fittings or solvent-cemented saddles as approved. Saddles for PVC pipe shall conform to Table 4 of ASTM D 3034.

2.3.4.5.10.4 The minimum depth of the cover over the pipe crown shall be 0.8m (2'-8").

2.3.4.5.11 Building Connections and Service Lines

Building connections and service lines will be planned to eliminate as many bends as practical and provide

convenience in rodding. Bends greater than 45 degrees made with one fitting should be avoided; combinations of elbows such as 45-45 degrees should be used with a cleanout provided. Connections to other sewers will be made directly to the pipe with standard fittings rather than through manholes. However, a manhole must be used if the connection is more than 31m from the building cleanout. Cleanouts shall be provided outside of the building. Service connection lines will be a minimum of 100 mm (4 inch) diameter and laid at a minimum 1% grade, but up to 2% as design parameters dictate. Service laterals shall be 150 mm (6 inch) and sloped to maintain the minimum velocity as described in paragraph "Gravity Sewer."

2.3.4.5.12 Cleanouts

Cleanouts must be installed on all sewer-building connections to provide a means for inserting cleaning rods into the underground pipe. Install manufactured wye fittings. In lieu of a wye fitting, an inspection chamber may be installed. The inspection chamber shall be of the same construction as a manhole. Preferably the cleanout will be of the same diameter as the building sewer, and never be smaller than 100 mm (4 inch).

2.3.4.5.13 Field Quality Control

2.3.4.5.13.1 Field Tests and Inspections

The Contracting Officer will conduct field inspections and witness field tests specified in this section. The Contractor shall perform field tests and provide labor, equipment and incidentals required for testing.

Check each straight run of pipeline for gross deficiencies by holding a light in a manhole; it shall show a practically a full circle of light through the pipeline when viewed from the adjoining end of the line. When pressure piping is used in a non-pressure line for non-pressure use, test this piping as specified for non-pressure pipe.

Test lines for leakage by either infiltration tests or exfiltration tests. Prior to testing for leakage, backfill trench up to at least lower half of the pipe. When necessary to prevent pipeline movement during testing, place additional backfill around pipe to prevent movement during testing, but leaving joints uncovered to permit inspection. When leakage or pressure drop exceeds the allowable amount specified, make satisfactory correction and retest pipeline section in the same manner. Correct visible leaks regardless of leakage test results.

Infiltration tests and ex-filtration tests: Perform these tests for sewer lines made of specified material, not only concrete, in accordance with ASTM C 969M, ASTM C 969. Make calculations in accordance with the Appendix to ASTM C 969M, ASTM 969.

2.3.4.5.14 Deflection Testing

Deflection testing will not be required, however, field quality control shall ensure that all piping is installed in accordance with deflection requirements established by the manufacturer.

2.3.4.5.15 Wastewater Treatment System

The wastewater treatment system and effluent disposal shall be designed to accommodate the compound's current demand. The Contractor shall use a wastewater treatment system, such as, a subsurface absorption field, whenever possible. Design requirements and criteria for treatment systems shall be in accordance with guidelines outlined in TM 5-814-3/AFM 88-11, Volume III Domestic Wastewater Treatment and UFC 3-240-02N Wastewater Treatment Systems Augmenting Handbook. Minimum acceptable percolation rates for absorption field and mound systems are categorized as slow permeable 3 to 120 min/in (1-48 min/cm). The sewage treatment system shall be sited the maximum distance possible from the working areas, public use areas and proposed facility. Septic systems shall be designed and installed in accordance with UFC 3-240-03.

3. ARCHITECTURAL REQUIREMENTS

3.1 GENERAL

All material approved shall become standardized material to be used throughout the facilities under contract. Different sub-contractors shall not use different material or standards under the contract. Intent of the project is to use locally procured materials (unless specified otherwise) and labor to the maximum extent possible while satisfying seismic building code. Conflicts between criteria shall be brought to the attention of the Contracting

Officer for resolution. In such instances, the Contractor shall furnish all available information with justification to the Contracting Officer.

3.2 DESIGN CRITERIA

The Codes, Standards, and Regulations listed herein shall be used in the construction of this project. The publications shall be the most recent editions. Standards other than those mentioned may be accepted provided they meet the minimum requirements and the contractor shall submit proof of equivalency to the Contracting Officer for approval.

IBC- International Building Code
NFPA-101- National Fire Protection Association, Life Safety Code.

3.3 LIFE SAFETY/ FIRE PROTECTION/ HANDICAPPED ACCESSIBILITY

To the extent possible, all facilities will be designed in accordance with recognized industry standards for life safety and building egress. An adequate fire alarm system, fire extinguishers, and smoke alarms shall all be included as required. Due to the lack of adequate water volume and pressure, sprinkler systems are not feasible. The facility shall comply with all other safety requirements of NFPA 101. In keeping with the intended function of these facilities, handicapped accessibility will be incorporated into this project to the greatest extent possible. Elevators shall not be required. At least one exterior handicapped access ramp shall be installed and shall extend to the second floor. The maximum slope of the ramp shall not exceed 8.5% and shall not exceed 10m in length without a landing platform. The interior width of the ramp shall not be less than one (1) meter.

3.4 ANTITERRORISM/ FORCE PROTECTION

Force protection/anti-terrorism measures for this location are not required.

3.5 EXCAVATION

Trench excavation shall be made for concrete footings. Trenches shall be a minimum of .8 meter deep. Trenches deeper than 1.5 meters shall have protective shoring to protect workers or have the sides of the trench sloped back at a slope of 1.5:1. Care shall be taken when backfilling of foundation trenches to avoid damage to walls. Any excess dirt shall become the property of the Contractor and shall be removed from the site to a location approved by the Contracting Officer.

3.6 CONCRETE

Place 100 mm (4”) of capillary water barrier below areas to receive a concrete slab on properly compacted soil free of organic material. Concrete flooring in wet areas shall slope to the floor drain and not allow for water to puddle. Concrete slabs in all areas shall not be placed prior to inspection and approval of piping and sub-surface by the Contracting Officer. Foundation trenches shall be level and free of loose material. Trenches shall be inspected and approved by the Contracting Officer prior to placing of any concrete foundations. See paragraph 5 for structural characteristics of concrete and reinforcing steel for foundations and slabs.

3.7 MASONRY

Storage of masonry materials shall be in a dry place or materials shall be covered with a plastic protective layer. Cover open walls each day to keep them protected and dry. Concrete masonry units (CMU) for exterior walls shall be either 200 mm or 300 mm wide x 400 mm x 200 mm high as shown on drawings. All cells shall be fully grouted and reinforced in exterior and shear walls. They shall be installed in running bond level and plumb. Mortar joints shall be 9 mm on all sides between CMU. Joints shall be struck with a concave tool to provide a smooth recessed curved surface. Install only quality units. The surface shall be free of chips, cracks, or other imperfections that would detract from the overall appearance of the finished wall. Defective CMU or mortar shall be rejected.

3.8 METAL

3.8.1 Steel Roof Joists

At the contractor’s option, steel roof framing may be designed and installed in lieu of the roof structure noted in specifications 01010. Steel roof joists shall be placed according to the roof design and roof manufacturer specifications. Steel “Z” purlins shall be installed perpendicular to the steel beams. Use continuous metal roof

sheets from ridge to eave to avoid constructing roof seams. In lieu of the continuous metal roof sheets, the Contractor can submit a plan for roofing seams; however, the plan must show a detail of how leaks will be avoided, and the Contracting Officer before application must approve the plan. Steel "hat channels" shall be installed on the bottom side of steel beams for the installation of gypsum board with screws. Provide all necessary metal framing for roof fascia and soffits. See structural paragraph for structural characteristics of steel joists.

3.8.2 Metal Window Sills
Galvanized metal window sills, 1 mm (20 gage), shall be installed on the exterior of all windows. The metal window sills shall have a turn down of 50 mm over the exterior masonry and stucco. Metal sills shall extend from side to side of the masonry opening in a single piece. Extend the metal windowsill a minimum of 20 mm under the bottom of the aluminum windows. Install masonry mortar as required for a smooth surface under the window sills. Sills shall slope a minimum of 6mm to the exterior and not allow water to puddle.

3.8.3 Metal Fascia and soffit
Metal fascia and soffit shall be prefinished, 24 gauge, galvanized, sheet metal to match roof color. Fascia shall extend minimum 100mm up under roofing and shall have a drip edge at the bottom. Soffit shall be vented with at least 30% free area for proper venting of the attic space. Laps at joints in fascia and soffit cover pieces shall be minimum 150mm.

3.8.4 Steel Handrails
Steel handrails shall be steel pipe conforming to ASTM A 53/A 53M, and shall have a nominal diameter of 50mm. Handrails shall be designed to resist a concentrated load of 490 N in any direction at any point on the top of the rail or 290 N applied horizontally to the top of the rail, whichever is more severe. Installation of handrails shall be with expansion shields and bolts into masonry and/or concrete. Railings shall be hot dipped galvanized and shop painted. Pipe collars of the same material and finish as the handrail shall be provided.

3.8.5 Safety Nosings for Concrete Treads
Safety nosings shall be cast iron with cross-hatched abrasive surfaces. Nosings shall be 100mm wide, 6mm thick, and shall terminate not more than 150mm from both ends of treads. Provide safety nosings with anchors embedded a minimum of 20mm in the concrete with tops flush with the top of the traffic surface.

3.9 CARPENTRY

3.9.1 METAL ROOF and WOOD FRAMING
Roof framing details noted below if the optional metal roofing is used.

3.9.2 Lumber
Mark each piece of framing and board lumber or each bundle of small pieces of lumber with the grade mark and the species. Distinguish structural, framing, and board lumbers.

3.9.3 Preservative Treated Lumber
The contractor shall be responsible for the quality of treated wood products which shall be inspected in accordance with AWPA M2. Treated lumber shall be in compliance with applicable AWPA treatment standards and shall be marked in accordance with AWPA M6 and shall.

3.9.4 Preservative Treatment
Treat wood products with waterborne wood preservatives conforming to AWPA P5. Peassure treatment of wood products shall conform to the requirements of AWPA U1 and AWPA T1. Pressure-treated wood products shall not contain arsenic, chromium, or other agents classified as carcinogenic, or possibly carcinogenic to humans. All lumber and wood work for ground contact, contact with masonry and concrete, and for underground uses shall be preservative treated.

3.9.5 Natural Decay and Insect Resistant Wood
Natural decay-resistant and insect-resistant wood may be used as an alternative to preservative treated wood.

3.9.6 Structural Lumber
Except where a specific grade is indicated or specified, any of the species and grades shall have allowable unit stresses in kPa per code requirements. Use for rafters, beams, and all other members shall be stress rated. Design of members and fastenings shall conform to AITC OT-01.

3.9.7 Framing Lumber and Board Lumber
Framing lumber such as studs, plates, caps, collar beams, cant strips, bucks, sleepers, nailing strips, and nailers, and board lumber such as roof sheathing shall be the species and grades per WWPA G-5.

3.9.8 Hardware
Unless otherwise indicated or specified, rough hardware shall be the type and size necessary for project requirements. Sizes, types, and spacings of fastenings of manufactured building materials shall be as recommended by the product manufacturer unless otherwise indicated or specified. Hardware exposed to the weather or embedded or in contact with preservative treated wood, exterior masonry, or concrete walls shall be zinc coated.

3.9.8.1 Bolts, Nuts, Studs, and Rivets
ANSI B18.2.1, ANSI B18.5.2.1M, ASME B18.5.2.2M, ASME B18.2.2, and ASTM A 687.

3.9.8.2 Anchor Bolts
ASTM A 307, size as indicated, complete with nuts and washers.

3.9.8.3 Lag Screws and Lag Bolts
ANSI B18.2.1.

3.9.8.4 Nails
Nails shall be the size and type best suited for the purpose and shall conform to ASTM F 547. Nails shall be hot-dipped galvanized when used on exterior work.

3.10 INSULATION

3.10.1 Board Insulation
Provide only thermal insulating materials recommended by the manufacturer for the type of application indicated. Board thermal insulation shall conform to the following standard: Extruded Preformed Cellular Polystyrene: ASTM C 578.

3.10.1.1 Thermal Resistance
Minimum R-values for board insulation shall be R-20 for wall insulation and R-30 for ceilings.

3.10.2 ACCESSORIES

3.10.2.1 Adhesive
As recommended by the insulation manufacturer

3.10.2.2 Mechanical Fasteners
Corrosion resistant fasteners as recommended by the insulation manufacturer.

3.10.3 INSTALLATION
Apply board directly to masonry with adhesive or fasteners as recommended by the insulation manufacturer. Apply in parallel courses with joints breaking midway over the course below. Put end in moderate contact with adjoining insulation without forcing. Cut and shape as required to fit around wall penetrations, projections or openings to accommodate conduit or other services. Seal around cut-outs with sealant.

3.11 ROOFING AND WEATHER PROOFING

3.11.1.1 BUILT UP ROOFING

The proposed base bid roofing is a one-way sloped concrete slab (deck); minimum slope is 250mm per meter. (Actual slope shall be determined by the contractor as part of the design, dependent upon site climatic and elevation conditions). Weather proofing shall be constructed by a built-up roofing section. The building up roofing construction is composed of the following layers on the concrete roofing deck (1) water proof reinforced bitumen roofing felt layer (adhered to concrete deck by mastic) at 100 mm overlapping per ASTM D 6380-03 requirements under (2) asphalt-aggregate course layer, applied at a rate of 2.9 kg/SM embedded with gravel at 19.5 kg/SM. The aggregate for roofing shall meet ASTM 1863 requirements, roofing asphalt shall meet ASTM D 312 or European equivalent as determined by the Contracting Officer.

3.11.1.2 SLOPED ROOFS*
On sloping roofs provide and install prefinished, .70 mm (24 gauge) galvanized steel in standing seam design. Color to be selected by the Contacting Officer. Metal roofing shall be anchored to the wood deck sheathing or steel "Z" purlins using fasteners as recommended by the roofing manufacturer or, at minimum, 300 mm on center at all seams. Roof sealant or adhesive shall be placed over any exposed fasteners. Roofing system shall include all edge, ridge and penetration flashings necessary for a watertight installation and as described in this section. Provide continuous vents on all roof ridges. (* Applicable only if the Standing Seam Metal Roof Option is exercised)

3.11.2 FLASHING AND SHEET METAL

3.11.2.1 Materials
Any metal listed by ASTM, DIN, BS or EN standards. Manual for a particular item may be used, unless otherwise specified or indicated. Materials shall conform to the requirements specified below and to the thicknesses and configurations established in ASTM, DIN, BS or EN standards. Different items need not be of the same metal, except that if copper is selected for any exposed item, all exposed items shall be copper.

3.11.2.1.1 Steel Sheet, Zinc-Coated (Galvanized)
Zinc coated steel conforming to ASTM A 525, DIN BS or EN Standards.

3.11.2.1.2 Aluminum wall capping and expansion joint profiles.
Aluminum wall capping conforming to ASTM B 209 M, DIN 18339, BS or EN Standards.

3.11.2.2 General
Downspouts shall be designed and fabricated on site. Unless otherwise specified or indicated, exposed edges shall be folded back to form a 13 mm (1/2 inch) hem on the concealed side, and bottom edges of exposed vertical surfaces shall be angled to form drips. Bituminous cement shall not be placed in contact with roofing membranes other than built-up roofing.

3.11.2.3 Wall, Floor, Ceiling Expansion Joints Over Plaster
Expansion joints shall be provided as specified in ASTM, DIN 18339, BS or EN Standards.

3.11.2.4 Connections and Jointing

3.11.2.4.1 Soldering
Soldering shall apply to copper, and stainless steel items. Edges of sheet metal shall be pre-tinned before soldering is begun. Soldering shall be done slowly with well heated soldering irons so as to thoroughly heat the seams and completely sweat the solder through the full width of the seam. Edges of stainless steel to be pre-tinned shall be treated with soldering acid flux. Soldering shall follow immediately after application of the flux. Upon completion of soldering, the acid flux residue shall be thoroughly cleaned from the sheet metal with a water solution of washing soda and rinsed with clean water.

3.11.2.4.2 Seaming
Flat-lock and soldered-lap seams shall finish not less than 25 mm. wide. Unsoldered plain-lap seams shall lap not less than 75 mm. unless otherwise specified. Flat seams shall be made in the direction of the flow.

3.11.2.4.3 Cleats

A continuous cleat shall be provided where indicated or specified to secure loose edges of the sheet metalwork. Butt joints of cleats shall be spaced approximately 3 mm. apart. The cleat shall be fastened to supporting wood construction with nails evenly spaced not over 300 mm. on centers. Where the fastening is to be made to concrete or masonry, screws shall be used and shall be driven in expansion shields set in concrete or masonry.

3.11.2.5 Downspouts
Downspouts and gutters shall be installed as indicated. Downspouts shall be rigidly attached to the building. Supports for downspouts shall be spaced according to manufacturer's recommendations.

3.11.2.6 Flashing
Flashing shall be installed at locations indicated and as specified below. Sealing shall be according to the flashing manufacturer's recommendations. Flashings shall be installed at intersections of roof with vertical surfaces and at projections through roof, except that flashing for heating and plumbing, including piping, roof and floor drains, and for electrical conduit projections through roof or walls are specified in other sections. Except as otherwise indicated, counter flashings shall be provided over base flashings. Perforations in flashings made by masonry anchors shall be installed on top of joint reinforcement. Lashing shall be formed to direct water to the outside of the system.

3.11.2.6.1 Through-wall Flashing
Through-wall flashing includes sill, lintel, and spandrel flashing. The flashing shall be laid with a layer of mortar above and below the flashing so that the total thickness of the two layers of the mortar and flashing are the same thickness as the regular mortar joints. Flashing shall not extend further in to the masonry backup wall than the first mortar joint. Joints in flashing shall be lapped and sealed. Flashing shall be one piece for lintels and sills.

3.11.2.6.2 Lintel Flashing
Lintel flashing shall extend the full length of lintel. Flashing shall extend through the wall one masonry course above the lintels and shall be bent down over the vertical leg of the outer steel lintel angle not less than 50 mm, or shall be applied over top of masonry and pre-cast concrete lintels. Bed joints of lintels at joints shall be under laid with sheet metal bond breaker.

3.11.2.6.3 Sill Flashing
Sill flashing shall extend the full width of the sill and not less than 100 mm beyond ends of sill except at joint where the flashing shall be terminated at the end of the sill.

3.11.2.6.4 Wall Capping
Wall Capping shall be installed according to the manufacturer's recommendations.

3.11.3 SEALANTS

3.11.3.1 Interior Sealant
ASTM C 834 or ASTM C 920, Type S or M, Grade NS, Class 12.5, Use NT, DIN, BS, or EN equal standards.

3.11.3.2 Exterior Sealant
For joints in vertical and horizontal surfaces, provide ASTM C 920, Type S or M, Grade NS, DIN, BS, or EN equal standards.

3.11.3.3 Floor Joint Sealant
(ASTM C 920) Type S or M, Grade P, class 25, use T

3.11.3.4 Primers
Provide a non-staining, quick-drying type and consistency recommended by the sealant manufacturer for the particular application.

3.11.3.5 Bond Breakers

Provide the type and consistency recommended by the sealant manufacturer to prevent adhesion of the sealant to backing or to bottom of the joint.

3.11.3.6 Backstops
Backing shall be 25 to 33 percent oversize for closed cell and 40 to 50 percent oversize for open cell material, unless otherwise indicated.

3.11.3.7 Cleaning Solvents
Provide type(s) recommended by the sealant manufacturer except for aluminum and bronze surfaces that will be in contact with sealant.

3.11.3.8 Surface Preparation
Surfaces shall be clean, dry to the touch, and free from dirt frost, moisture, grease, oil, wax, lacquer, paint, or other foreign matter that would tend to destroy or impair adhesion. Oil and grease shall be removed with solvent and surfaces shall be wiped dry with clean cloths. When resealing an existing joint, remove existing calk or sealant prior to applying new sealant. For surface types not listed below, the sealant manufacturer shall be contacted for specific recommendations.

3.11.3.9 Masking Tape
Masking tape shall be placed on the finish surface on one or both sides of a joint cavity to protect adjacent finish surfaces from primer or sealant smears. Masking tape shall be removed within 10 minutes after joint has been filled and tooled.

3.11.3.10 Backstops
Install backstops dry and free of tears or holes. Tightly pack the back or bottom of joint cavities with backstop material to provide a joint of the depth specified.

3.11.3.11 Primer
Immediately prior to application of the sealant, clean out loose particles from joints. Where recommended by sealant manufacturer, apply primer to joints in concrete masonry units, wood, and other porous surfaces in accordance with sealant manufacturer's instructions. Do not apply primer to exposed finish surfaces.

3.11.3.12 Bond Breaker
Provide bond breakers to the back or bottom of joint cavities, as recommended by the sealant manufacturer for each type of joint and sealant used, to prevent sealant from adhering to these surfaces. Carefully apply the bond breaker to avoid contamination of adjoining surfaces or breaking bond with surfaces other than those covered by the bond breaker.

3.11.3.13 Sealants
Provide a sealant compatible with the material(s) to which it is applied. Do not use a sealant that has exceeded shelf life or has jelled and can not be discharged in a continuous flow from the gun. Apply the sealant in accordance with the manufacturer's instructions with a gun having a nozzle that fits the joint width. Force sealant into joints to fill the joints solidly without air pockets. Tool sealant after application to ensure adhesion. Sealant shall be uniformly smooth and free of wrinkles. Upon completion of sealant application, roughen partially filled or unfilled joints, apply sealant, and tool smooth as specified. Sealer shall be applied over the sealant when and as specified by the sealant manufacturer.

3.11.3.14 Protection
Protect areas adjacent to joints from sealant smears. Masking tape may be used for this purpose if removed 5 to 10 minutes after the joint is filled.

3.11.3.15 Final Cleaning
Upon completion of sealant application, remove remaining smears and stains and leave the work in a clean and neat condition.

a. Masonry and Other Porous Surfaces: Immediately scrape off fresh sealant that has been smeared on masonry and rub clean with a solvent as recommended by the sealant manufacturer. Allow excess sealant to cure for 24 hour then remove by wire brushing or sanding.

b. Metal and Other Non-Porous Surfaces: Remove excess sealant with a solvent-moistened cloth.

3.12 WINDOWS, DOORS & GLAZING

3.12.1 WINDOWS

3.12.1.1 Materials

A. Aluminum Extrusions: Provide alloy and temper recommended by the window manufacturer for the strength, corrosion resistance, and application of required finish, meeting the DIN 1725 raw material requirements, but not less than 215 N/mm2 ultimate tensile strength and not less than 1.5 mm thick at any location for main frame and sash members.

B. Fasteners: Provide aluminum, nonmagnetic stainless steel, epoxy adhesive, or other materials warranted by the manufacturer to be non-corrosive and compatible with aluminum window members, trim, hardware, anchors, and other components of window units.

1. Reinforcement: Where fasteners screw-anchor into aluminum less than 0.125 inch thick, reinforce the interior with aluminum or nonmagnetic stainless steel to receive screw threads or provide standard non-corrosive pressed-in splined grommet nuts.

2. Exposed Fasteners: Except where unavoidable for application of hardware, do not use exposed fasteners. For application of hardware, use fasteners that match the finish of the member or hardware being fastened, as appropriate.

C. Anchors, Clips, and Window Accessories: Fabricate anchors, clips, and window accessories of aluminum, nonmagnetic stainless steel, or hot-dip zinc-coated steel or iron complying with the requirements of DIN 1748; provide sufficient strength to withstand design pressure indicated. As a minimum provide 3 anchors on each side of the frame.

D. Compression-Type Glazing Strips and Weatherstripping: Unless otherwise indicated, and at the manufacturer's option, provide compressible stripping for glazing and weatherstripping such as molded EPDM or neoprene gaskets.

E. Sealant: For sealants required within fabricated window units, provide type recommended by the manufacturer for joint size and movement. Sealant shall remain permanently elastic non-shrinking, and non-migrating. Comply with Sealants of these specifications for selection and installation of sealants.

F. Wire Fabric Insect Screen shall be permanently fixed to the exterior, except for guard towers.

3.12.1.2 Hardware

General: Provide the manufacturer's standard hardware fabricated from aluminum, stainless steel, or other corrosion-resistant material compatible with aluminum and of sufficient strength to perform the function for which it is intended.

3.12.1.3 Fixed, Casement, and Horizontal Sliding Windows

All windows shall utilize laminated and insulating glazing consisting of two panes of 6mm laminated glazing separated by minimum 12mm airspace..

3.12.1.4 Fabrication

Provide aluminum windows with factory finish in all buildings to fit the masonry openings. Window openings shall be provided with insect screening. Provide a locking device on the interior of each window. Provide anchors on each side of the frame into the adjoining masonry, 3 on each side. Provide weather stripping system for all exterior

windows and doors.

3.12.1.5 Finishes
Apply compliance with paint manufacturer's specifications for cleaning, conversion coating, and painting.

3.12.1.6 Inspection
Inspect openings before beginning installation. Verify that rough or masonry opening is correct and the sill plate is level. Masonry surfaces shall be visibly dry and free of excess mortar, sand, and other construction debris.

3.12.1.7 Installation
Comply with manufacturer's specifications and recommendations for installation of window units, hardware, operators, and other components of the work. Set window units plumb, level, and true to line, without warp or rack of frames or sash. Provide proper support and anchor securely in place. Set sill members and other members in a bed of compound or with joint fillers or
gaskets, as shown, to provide weathertight construction. Refer to the Sealant sections for compounds, fillers, and gaskets to be installed concurrently with window units. Coordinate installation with wall flashings and other components of the work.

3.12.1.8 Adjusting
Adjust operating sash and hardware to provide a tight fit at contact points and at weatherstripping for smooth operation and a weathertight closure.

3.12.1.9 Cleaning
Clean aluminum surfaces promptly after installation of windows. Exercise care to avoid damage to protective coatings and finishes. Remove excess glazing and sealant compounds, dirt, and other substances. Lubricate hardware and other moving parts.

3.12.2 DOORS
All exterior doors (entry and exist doors) shall be heavy duty metal doors with metal frames. Interior door shall be solid core wood doors with steel frames. Corridor doors shall have 20 minute fire rating. All glazed doors shall have glazing in the upper half of the door, Glazing in fire rated doors shall be fire rated and not exceed 0.77 SM (100 sq inches). Commercial (industrial) grade duty lock sets and hardware shall be used on all doors. Provide (3) industrial grade heavy hinges on all doors. Hinges shall be the 5 knuckle type or equivalent. Provide door handles and locksets that can be locked with a key on all doors. All door locks shall have a thumb latch on inside of door such that no key is necessary to exit the room or building. Coordinate the final keying schedule with Contracting Officer prior to ordering lock sets. Generally each building should have 8 master keys fitting all locks, 8 sub-master keys fitting all exterior doors and 3 keys each for each interior door. Include 25% spare key blanks for the amount of keys provided per building. Provide numbering system identifying key to associated room door. All glazing in or adjacent to doors shall be fire rated or tempered per IBC. Provide weather stripping system for all exterior doors.

3.12.2.1 Exterior Steel Doors
SDI A250.8, except as specified otherwise. Prepare doors to receive specified hardware. Undercut where indicated. Exterior doors shall have top edge closed flush and sealed to prevent water intrusion. Doors shall be 44.5 mm thick, unless otherwise indicated. Doors shall be constructed using heavy gauge steel with minimum thickness of 1.2 mm.

3.12.2.1.1 Accessories

3.12.2.1.1.1 Louvers: Not used.

3.12.2.1.1.2 Astragals: (only used for laboratories)

For interior pairs of fire rated wood laboratory doors, provide stainless steel astragals complying with NFPA 80 for fire rated assemblies and NFPA 105 for smoke control assemblies.

3.12.2.1.1.3 Moldings
Provide moldings around glass of exterior doors. Provide non-removable moldings on outside of exterior doors .

3.12.2.1.2 Standard Steel Frames
SDI A250.8, except as otherwise specified. Form frames to sizes and shapes indicated, with welded corners or knock-down field-assembled corners. Provide steel frames for doors, transoms, sidelights, mullions, cased openings, and interior glazed panels, unless otherwise indicated.

3.12.2.1.3 Welded Frames
Continuously weld frame faces at corner joints. Mechanically interlock or continuously weld stops and rabbets. Grind welds smooth.

3.12.2.1.4 Mullions and Transom Bars
Mullions and transom bars shall be closed or tubular construction and shall member with heads and jambs butt-welded thereto or knock-down for field assembly. Bottom of door mullions shall have adjustable floor anchors and spreader connections.

3.12.2.1.5 Stops and Beads
Form stops and beads from 0.9 mm thick steel. Provide for glazed and other openings in standard steel frames. Secure beads to frames with oval-head, countersunk Phillips self-tapping sheet metal screws or concealed clips and fasteners. Space fasteners approximately 300 to 400 mm on centers. Miter molded shapes at corners. Butt or miter square or rectangular beads at corners.

3.12.2.1.6 Anchors
Provide anchors to secure the frame to adjoining construction. Provide steel anchors, zinc-coated or painted with rust-inhibitive paint, anchors not lighter than 1.2 mm thick.

3.12.2.1.6.1 Wall Anchors
Provide at least three anchors for each jamb.

a. Masonry: Provide anchors of corrugated or perforated steel straps or 5 mm diameter steel wire, adjustable or T-shaped;

b. Completed openings: Secure frames to previously placed concrete or masonry with expansion bolts

3.12.2.1.6.2 Floor Anchors
Provide floor anchors drilled for 10 mm anchor bolts at bottom of each jamb member. [Where floor fill occurs, terminate bottom of frames at the indicated finished floor levels and support by adjustable extension clips resting on and anchored to the structural slabs.

3.12.2.1.7 Weather-stripping, Integral Gasket
All exterior doors shall have weather-stripping. Black synthetic rubber gasket with tabs for factory fitting into factory slotted frames, or extruded neoprene foam gasket made to fit into a continuous groove formed in the frame, may be provided in lieu of head and jamb seals. Insert gasket in groove after frame is finish painted.

3.12.2.1.8 Hardware Preparation
Provide minimum hardware reinforcing gages as specified in ANSI A250.6. Drill and tap doors and frames to receive finish hardware. Prepare doors and frames for hardware in accordance with the applicable requirements of SDI A250.8 and ANSI A250.6. For additional requirements refer to BHMA A115. Drill and tap for surface-applied hardware at the project site. Build additional reinforcing for surface-applied hardware into the door at the factory. Locate hardware in accordance with the requirements of SDI A250.8, as applicable. Punch door frames, with the exception of frames that will have weather-stripping or lightproof or soundproof gasketing, to receive a minimum of two rubber or vinyl door silencers on lock side of single doors and one silencer for each leaf at heads of double doors. Set lock strikes out to provide clearance for silencers.

3.12.2.1.9 Finishes
All surfaces of doors and frames shall be thoroughly cleaned, chemically treated and factory primed with a rust inhibiting coating as specified in SDI A250.8, or paintable A25 galvannealed steel without primer. Where coating is removed by welding, apply touchup of factory primer.

3.12.2.1.10 Fabrication and Workmanship
Finished doors and frames shall be strong and rigid, neat in appearance, and free from defects, waves, scratches, cuts, dents, ridges, holes, warp, and buckle. Molded members shall be clean cut, straight, and true, with joints coped or mitered, well formed, and in true alignment. Dress exposed welded and soldered joints smooth. Design door frame sections for use with the wall construction indicated. Corner joints shall be well formed and in true alignment. Conceal fastenings where practicable. On wraparound frames for masonry partitions, provide a throat opening 3 mm larger than the actual masonry thickness. Design other frames in exposed masonry walls or partitions to allow sufficient space between the inside back of trim and masonry to receive calking compound.

3.12.2.1.11 Grouted Frames
For frames to be installed in exterior walls and to be filled with mortar or grout, fill the stops with strips of rigid insulation to keep the grout out of the stops and to facilitate installation of stop-applied head and jamb seals.

3.12.2.1.12 Fire and Smoke Doors and Frames
The requirements of NFPA 80 and NFPA 105 respectfully shall take precedence over details indicated or specified.

3.12.2.13 Installation

3.12.2.1.13.1 Frames
Set frames in accordance with SDI 105. Plumb, align, and brace securely until permanent anchors are set. Anchor bottoms of frames with expansion bolts or powder-actuated fasteners. Build in or secure wall anchors to adjoining construction. Backfill frames with mortar. When an additive is provided in the mortar, coat inside of frames with corrosion-inhibiting bituminous material. For frames in exterior walls, ensure that stops are filled with rigid insulation before grout is placed.

3.12.2.1.13.2 Doors
Hang doors in accordance with clearances specified in SDI A250.8. After erection and glazing, clean and adjust hardware.

3.12.2.1.13.3 Fire and Smoke Doors and Frames
Install fire doors and frames, including hardware, in accordance with NFPA 80. Most notable are panic hardware installed for exterior exit doors.

3.12.2.1.14 Protection and Cleaning
Protect doors and frames from damage. Repair damaged doors and frames prior to completion and acceptance of the project or replace with new, as directed. Wire brush rusted frames until rust is removed. Clean thoroughly. Apply an all-over coat of rust-inhibitive paint of the same type used for shop coat. Upon completion, clean exposed surfaces of doors and frames thoroughly. Remove mastic smears and other unsightly marks.

3.12.2.2 Interior Wood Doors
Provide doors that are wood, solid core, 900 and 1350 mm Wide x 2100 mm. High x 45 mm. Thick with steel frame to match new door masonry openings. All glazed doors shall have 5 mm. single tempered glazing, 20 minute fire rated for corridor doors.

3.12.2.2.1 Accessories

3.12.2.2.1.1 Door Louvers – do not use, door undercuts are to be used for transfer ventilation.

3.12.2.2.1.2 Astragals (only used for laboratories)

For interior pairs of fire rated wood laboratory doors, provide stainless steel astragals complying with NFPA 80 for fire rated assemblies and NFPA 105 for smoke control assemblies.

3.12.2.2.2 Pre-fitting
At the Contractor's option, doors may be provided factory pre-fit. Doors shall be sized and machined at the factory by the door manufacturer in accordance with the standards under which they are produced. The work shall include sizing, beveled edges, mortising, and drilling for hardware and providing necessary beaded openings for glass and louvers. Provide the door manufacturer with the necessary hardware samples, and frame and hardware schedules as required to coordinate the work.

3.12.2.2.3 Finishes
Provide door finish colors as selected by the Contracting Officer from the color selection samples.

3.12.2.2.4 Installation
Before installation, seal top and bottom edges of doors with the approved water-resistant sealer. Seal cuts made on the job immediately after cutting using approved water-resistant sealer. Fit, trim, and hang doors with a 2 mm minimum, 3 mm maximum clearance at sides and top, and a 5 mm minimum, 6 mm maximum clearance over thresholds. Provide 10 mm minimum, 11 mm maximum clearance at bottom where no threshold occurs. Bevel edges of doors at the rate of 3

mm in 50 mm. Door warp shall not exceed 6 mm when measured in accordance with WDMA I.S. 1-A.

3.12.3. GLAZING
ASTM C 1036, or ASTM C 1172 or equal.

3.12.3.1 Temper Glass
Tempered glass shall be kind FT fully tempered flat type. Class 1 clear, condition A uncoated surface, Quality q3-glazing select, conforming to ASTM, DIN, BS or EN standards. Color shall be clear.

3.12.3.2 Laminated Glass
Laminated glass shall be constructed out of two, 3mm glass panes bonded together with a minimum .75mm polyvinyl-butyral (PVB) interlayer.

3.12.3.3 Insulated Glass
All exterior glazing shall be insulated, constructed of two panes of laminated glass separated by a hermetically sealed 12mm airspace.

3.12.3.4 Glazing Accessories

3.12.3.4.1 Sealant
Sealant shall be elastomeric conforming to ASTM, DIN, BS, or EN standards. Type S or M, Grade NS, Class 12.5, Use G, of type chemically compatible with setting blocks, preformed sealing tape and sealants used in manufacturing insulation glass. Color of sealant shall be as selected from manufacturer’s full range of standard colors by Contracting Officer.

3.12.3.4.2 Glazing Gaskets
Glazing gaskets shall be extruded with continuous integral locking projection designed to engage into metal glass holding members to provide a watertight seal during dynamic loading, building movements and thermal movements. Glazing gaskets for a single glazed opening shall be continuous one-piece units with factory-fabricated injection-molded corners free of flashing and burrs. Glazing gaskets shall be in lengths or units recommended by manufacturer to ensure against pull-back at corners.

3.12.3.4.3 Fixed Glazing Gaskets
Fixed glazing gaskets shall be closed-cell (sponge) smooth extruded compression gaskets of cured elastomeric virgin neoprene compounds conforming to ASTM, DIN, BS. Or EN standards.

3.12.3.4.4 Wedge Glazing Gaskets
Wedge glazing gaskets shall be high-quality extrusions of cured elastomeric virgin neoprene compounds, ozone resistant, conforming to ASTM, DIN, BS, or EN standards.

3.12.3.4.5 Putty and glazing Compound
Glazing compound shall conform to ASTM, DIN, BS, or EN standards for face-glazing metal sash. Putty shall be linseed oil type conforming to DIN, BS, or EN standards for face-glazing primed wood sash. Putty and glazing compounds shall not be used with insulating glass or laminated glass.

3.12.3.4.6 Setting and Edge Blocking
Neoprene setting blocks shall be dense extruded type conforming to ASTM, DIN, BS, or EN standards. Silicone setting blocks shall be required when blocks are in contact with silicone sealant. Profiles, lengths and locations shall be as required and recommended in writing by glass manufacturer.

3.12.3.5 Preparation
Openings and framing systems scheduled to receive glass shall be examined for compliance with glass manufacturer's recommendations including size, squareness, offsets at corners, presence and function of weep system, face and edge clearance requirements and effective sealing between joints of glass-framing members. Detrimental materials shall be removed from glazing rabbet and glass surfaced and wiped dry with solvent. Glazing surfaces shall be dry and free of frost.

3.12.3.6 Installation
Glass and glazing work shall be performed in accordance with, glass manufacturer's instructions and warranty requirements. Glass shall be installed with factory labels intact and removed only when instructed. Edges and corners shall not be ground, nipped or cut after leaving factory. Springing, forcing or twisting of units during installation will not be permitted.

3.12.3.7 Cleaning
Upon completion of project, outside surfaces of glass shall be washed clean and the inside surfaces of glass shall be washed and polished in accordance with glass manufacturer's recommendations.

3.12.3.8 Protection
Glass work shall be protected immediately after installation. Glazed openings shall be identified with suitable warning tapes, cloth, or paper flags, attached with non-staining adhesives. Reflective glass shall be protected with a protective material to eliminate any contamination of the reflective coating. Protective material shall be placed far enough away from the coated glass to allow air to circulate to reduce heat buildup and moisture accumulation on the glass. Glass units which are broken, chipped, cracked, abraded, or otherwise damaged during construction activities shall be removed and replaced with new units.

3.13 FINISHES
All finishes, colors and materials shall be as indicated in the conceptual drawings.

3.13.1 EXTERIOR INSULATION AND FINISH SYSTEM (EIFS)
EIFS shall be a job-fabricated exterior wall covering consisting of insulation board, reinforcing fabric, base coat, finish coat, adhesive and mechanical fasteners as applicable. The system components shall be compatible with each other and with the substrate as recommended or approved by, and the products of, a single manufacturer regularly engaged in furnishing EIFS. Manufacturer shall have been in the practice of manufacturing and designing EIFS for a period of not less than 5 years, and shall have been involved in at least five projects similar to this project in size, scope, and complexity, in the same or similar climate as this project. The EIFS installer shall be trained by the EIFS manufacturer to perform the system installation and shall have successfully installed at least five projects at or near the size and complexity of this project. EIFS color shall match color indicated in the drawings.

3.13.2 STUCCO
Where EIFS products or installers are not readily available for installation, the exterior of all buildings may be

stucco over insulation. Complete system design shall be provided indicating a durable system that will provided adequate support for the stucco finish. A temperature of between 4 and 27 degrees C shall exist for a period of not less than 48 hours prior to application of plaster and for a period of at least 48 hours after plaster has set. Control joints shall be designed for expansion and contraction of plaster work due to thermal exposure. Control joints shall comprise of back to back casing beads. Install new stucco in 2 coats. The first coat shall be a scratch coat approximately 1 cm thick. Allow 7 days to cure. The second coat shall be finish stucco, smooth finish, approximately 1 cm thick. Allow 7 days to cure before painting. Stucco showing over sanding, cracks, blisters, pits, checks, discoloration or other defects is not acceptable. Defective plaster work shall be removed and replaced with new plaster at the expense of the Contractor. Patching of defective work will be permitted only when approved by the Contracting Officer. Patching shall match existing work in texture and color. All exterior color finish shall be integral with the stucco finish. No painted stucco shall be permitted due to minimize future maintenance. Color shall match colors indicated in the drawings.

3.13.3 Interior walls shall be plaster applied in a similar manner as exterior stucco. Paint with 2 coats of semi-gloss paint with less than .06% lead by weight. Color shall be as indicated in the conceptual drawings.

3.13.4 Ceilings: shall be plaster applied in 2 coats over wire mesh, which is to be stapled to the 20 mm x 60 mm wood battens. Paint ceiling with 2 coats of flat white, with less than .06% lead by weight, except in toilet rooms where ceiling paint shall be semi-gloss.

3.13.5 Paint all exposed exterior wood with 2 coats of gloss enamel, color to be selected by the Contracting Officer.

3.13.6 Exposed exterior steel trim, frames, doors and pipe railings: Paint with one coat oil-based primer, with 2 coats of oil-based alkyd gloss enamel, color to be selected by the Contracting Officer from the color board provided by the Contractor.

3.13.7 Exposed wood trim, frames and doors: Paint with one coat oil-based primer, 2 coats of gloss enamel, color to be selected by the Contracting Officer from the color board provided by the Contractor

3.13.8 Tile: Tile work shall not be performed unless the substrate and ambient temperature is at least 10 degrees C and rising. Temperature shall be maintained above 10 degrees C while the work is being performed and for at least 7 days after completion of work. Upon completion, tile surfaces shall be thoroughly cleaned in accordance with manufacturer's approved cleaning instructions. Acid shall not be used for cleaning glazed tile. Floor tile with resinous grout or with factory mixed grout shall be cleaned in accordance with instructions of the grout manufacturer. After the grout has set, tile wall surfaces shall be given a protective coat of a non-corrosive soap or other approved method of protection.

3.13.8.1 Floors in wet areas shall be 300 mm x 300 mm terrazzo tile with thin set mortar. Joints shall be 2-3 mm. Waterproof gray grout shall be applied the full depth of the tile. Floors shall slope, minimum 1/50, to floor drains. Slope shall be obtained with sloping mortar bed of minimum 20 mm thickness. Provide continuous waterproofing membrane beneath sloping mortar bed, turn up wall 300 mm behind wall base. Membrane shall be fully sealed at joints and shall shed water into body of floor drain. Color of tile shall be selected by the Contracting Officer from samples provided by the Contractor.

3.13.8.2 Floors in administration areas, classrooms, corridors, and all rooms unless indicated or stated otherwise shall be terrazzo flooring**.** Color of tile shall be selected by the Contracting Officer from samples provided by the Contractor.

3.13.8.3 All other floors (storage and electrical rooms) are to be sealed concrete.

3.14 SPECIALTIES

3.14.1 Mirrors
0.6 m x 0.9 m, 6 mm plate glass or stainless steel, shall be mounted above all lavatories. Mount bottom of mirrors 1.1m above finished floor.

3.14.2 Toilet Paper Holders
Toilet paper holders, stainless steel, shall be installed approximately 200 mm above floor in Eastern Toilets 600 mm above floor.

3.14.3 Light Duty Metal Shelf
Provide a 600 mm long, light duty stainless steel shelf and brackets over each lavatory.

4. STRUCTURAL

The Contractor should use the following American standards to provide sound structural design if local standards are not available, relevant, or applicable. The Contractor shall follow American Concrete Institute Standards for design and installation of all concrete structures.

Concrete (ASTM-. C 31M)	210.0 kg./sq.cm (f'c), minimum specified compressive strength @ 28 days
Steel Reinforcement	4218.0 kg./sq.cm(Fy= 60.0 ksi),yield strength.
Welded Wire Fabric	ASTM A185
Anchor Bolts	ASTM A307 using A36 steel.
Concrete Masonry Units	ASTM C90, Type I (normal wt, moisture Cntrl).
Mortar	ASTM C270, Type S (Ultimate compressive strength of 130.0 kg/sq. cm.)
Proportion	1 part cement, 0-1/2 part lime and 4-1/2 parts aggregate
Grout	ASTM C476 (Slump between 200 mm to 250 and Compressive Strength 14 MPa (2000 psi) at 28 days.
Joint Reinforcement	Standard 9 gage minimum, Ladder Type
Structural Steel	ASTM A36: 2530.0 kg./sq.cm (Fy = 36,000psi)
Welding	AWS (American Welding Society) D1.1-2002.

4.1 GENERAL

The project consists of various structures. The new buildings shall be provided with a reinforced concrete slab foundation that is properly placed on suitable compacted ground area and shall be in accordance with the recommendations from the geotechnical investigation. The reinforced concrete foundation shall be designed by the Contractor. Building foundations shall be founded a minimum of 800 mm below grade.

4.2 DESIGN

Design shall be performed and design documents signed by a registered professional architect and/or engineer (qualifications as determined by the COR). Calculations shall be in SI (metric) units of measurements. All components of the building shall be designed and constructed to support safely all loads without exceeding the allowable stress for the materials of construction in the structural members and connections. All building exterior walls shall be constructed with reinforced CMU or reinforced concrete unless otherwise stated in Sections 1010 or 1015.

4.3 DEAD AND LIVE LOADS

Dead loads consist of the weight of all materials of construction incorporated in the buildings. Live loads used for design shall be in accordance with the Structural Load Data, UFC 3-310-01 as referenced herein.

4.4 WIND LOADS

Wind loads shall be calculated using a "3-second gust" wind speed of 135 km/hr.

4.5 SEISMIC

The building and all parts thereof shall be designed for the seismic requirements as defined by the International Building Code referenced herein. Spectral ordinates shall be S_s = 1.28g and S_1 = 0.51g.

4.6 STRUCTURAL CONCRETE

Concrete structural elements shall be designed and constructed in accordance with the provisions of the American Concrete Institute, Building Code Requirements for Structural Concrete, ACI 318, latest edition. A minimum specified compressive strength at 28 days of 21 MPa (3000 psi) shall be used for design and construction of all concrete, except that 24 MPa (3500 psi) shall be used for Shotcrete applications. Reinforcing steel shall be deformed bars conforming to American Society for Testing and Materials (ASTM) publication ASTM a 615, Deformed and Plain Billet-Steel Bars for Concrete Reinforcement. Concrete at or below grade shall have maximum water-cement ration of 0.50. No concrete shall be placed when the ambient air temperature exceeds 32 degrees C (90 degrees F) unless an appropriate chemical retardant is used. In all cases when concrete is placed at 32 degrees C (90 degrees F) or hotter it shall be covered and kept continuously wet for a minimum of 48 hours. Concrete members at or below grade shall have a minimum concrete cover over reinforcement of 75 mm (3 inch).

4.7 MASONRY

Masonry shall be designed and constructed in accordance with the provisions of Building Code Requirements for Masonry Structures, ACI 530/ASCE 5/TMS 402, latest editions. Mortar shall be Type S and conform to ASTM C 270, latest edition. Masonry shall not be used below grade, unless for fully grouted and reinforced foundation stem walls. All cells of exterior and shear walls shall be fully grouted and reinforced.

4.8 STRUCTURAL STEEL

Structural steel shall be designed and constructed in accordance with the provisions of American Institute of Steel Construction (AISC), Specifications for Structural Steel Buildings, 9th Edition. Design of cold-formed steel structural members shall be in accordance with the provisions of American Iron and Steel Institute (AISI), Specifications for Design of Cold-Formed Steel Structural Members.

.

4.9 METAL DECK

Deck units shall conform to SDI Pub. No. 29. Panels of maximum possible lengths shall be used to minimize end laps. Deck units shall be fabricated in lengths to span three or more supports with flush, telescoped or nested 50 mm (2 inch) laps at ends, and interlocking, or nested side laps. Metal deck units shall be fabricated of steel thickness required by the design and shall be galvanized.

4.10OPEN WEB STEEL JOIST

Open web steel joists shall conform to SJI Specifications and Tables. Joists shall be designed to support the loads given in the standard load tables of SJI Specifications and Tables.

4.11FOUNDATIONS

Foundations shall be in accordance with the Geotechnical requirements of this RFP.

5. GEOTECHNICAL

Existing geotechnical information is not available at the project site. Any site-specific geotechnical data required to develop foundations, materials, earthwork, and other geotechnical related design and construction activities for this project shall be the Contractor's responsibility. The Contractor shall develop all pertinent geotechnical design and construction parameters by appropriate field and laboratory investigations and analyses. The geotechnical information shall include, but not limited to, boring locations on site plan, particle size & distribution, liquid & plastic limit test, moisture & density test, and allowable soil bearing capacity & foundation recommendation, etc.

6. MECHANICAL

6.1 GENERAL

The work covered by this section consists of design, supply, fabrication and installation of new building heating and ventilation (HV) systems. It also includes the delivery to site, erection, setting to work, adjusting, testing, balancing and handing over in perfect operating and running condition all of the HV equipment including all necessary associated mechanical works.

6.2 SPECIALIST SUB-CONTRACTORS QUALIFICATIONS

The heating and ventilation works shall be executed by an air-conditioning specialist sub-contractor experienced in the design and construction of these types of systems.

6.3 CODES, STANDARDS AND REGULATIONS
The equipment, materials and works covered under the heating and ventilation services shall conform to the referenced standards, codes and regulations where applicable except where otherwise mentioned under each particular clause.

6.4 DESIGN CONDITIONS (note only heating and ventilation are required for this project; no air-conditioning is required).

6.4.1 OUTSIDE DESIGN CONDITIONS (Contractor shall verify the ambient conditions with available and reliable local weather data.)

6.4.2 INDOOR DESIGN CONDITIONS

Administrative buildings	Cooling: Ceiling Fans; Heating 20 C (68 F)
Classrooms/Labs	Cooling: Ceiling Fans; Heating 20 C (68 F)
Bathrooms	Heating 20 C (68 F)

6.4.3 Noise Levels
Noise levels inside occupied spaces generated by HV systems shall not exceed NC 35

6.4.4 Internal Loads
a. Occupancy: Use ASHRAE standards to calculate sensible and latent heat from people
b. Lighting (Fluor.): 21.5 W/m2 (2 W/Ft2) maximum (however lighting levels shall meet minimum requirements)
c. Outdoor Air: 34 CMH/Person (20 CFM)
Latrine – 85 CMH/WC or Urinal (50 CFM) exhaust.

6.4.5 Thermal Performance
Assemblies shall meet the requirements of TI-800, Design Criteria, UFC 3-400-01 Design: Energy Conservation, and ASHRAE Standard 90.1, latest editions, but shall meet the following minimum requirements:

Assembly	Minimum Thermal Value
Exterior walls (above grade)	RSI 2.288 (R 20)
Ceilings/roof	RSI 5.28 (R 30)
Floor (over unheated space)	RSI 5.28 (R 30)
Exterior doors	RSI 0.25 (R 1.43)
Exterior windows/(glazing within doors)	RSI 0.308(R 1.75)
Skylights	RSI 0.18 (R 1.02)

6.5 VENTILATION AND EXHAUST SYSTEMS

6.5.1 VENTILATION AND EXHAUST SYSTEMS
All fans shall be used for building ventilation and pressurization with capacities to be selected for minimum noise level generated. Unit mounted fans either used for supply or exhaust shall be centrifugal forward curved, backward inclined, or airfoil fans with non-overloading characteristics of high efficiency and quiet running design. The fans shall be of the heavy-duty type with durable construction and proved performance in a desert environment. Each exhaust fan shall be provided with motorized or gravity dampers which close automatically when the fan is not running. Also, each fan shall be complete with vibration isolator, external lubricators, and all accessories and sound attenuators as necessary.
Supply intake openings shall be provided with motorized dampers which are interlocked with the exhaust fan. The dampers open or close when the exhaust fan is on or off respectively.
Exhaust fans shall be centrifugal wall mounted type. Intake openings shall be provided with motorized dampers which are interlocked with the exhaust fans. The systems shall consist of centrifugal fan, ductwork, exhaust grills, and interlock controls. Toilet and Wash Area: Minimum exhaust ventilation shall be the larger of 35 m3/h / m2

floor or 85 m3/h / toilet (WC). At extreme cold in winter these values can be reduced for short periods to 10 m3/h / m2 or 40 m3/h / toilet (WC) to conserve heat.

To reduce sand and dirt migration, outside air intakes shall be located as high as possible within architectural constraints. The intakes shall be sized so that free air velocities are below 2.5 m/s (500 fpm). For inhabited buildings locate all air intakes at least 1.5 (center-line of intake) meters above the ground. Each air intake shall be provided with a motorized damper which is interlocked with the exhaust fan.

Ceiling Fans. Ceiling fans are required for all rooms for summer usage. The fans shall be of the heavy-duty type with durable construction and proved performance in a desert environment. Provide 1320mm blade ceiling fans at one per 40 square meters of floor space. Fans shall have reversible motors. Center or distribute evenly in room. Coordinate placement with the lighting plan to prevent conflict or casting shadows. Fan mount shall be flush, standard, or angle mount depending on ceiling height. Fan shall be mounted such that the fan blade is approximately 2.44 meters above the finished floor. The fan shall be provided with out light kit. The finish shall be factory painted white. The controls shall be from either a single pole switch or from two 3 way switches to provide on/off operation. The electrical supply shall be 220volts, single phase, and 50 hertz. Install per manufacturers' instructions.

6.5.2 SUBMITTALS

The Contractor shall submit the following for the equipment to be provided under this section of the specification: manufacturer's data including performance characteristics at design conditions; catalog cuts showing dimensions, performance data, electrical requirements, compliance with standards as stated in paragraph CODES, STANDARDS AND REGULATIONS; drawings indicating location and installation details.

6.6 ELECTRIC RESISTANCE HEATERS

6.6.1 CABINET HEATER

Cabinet heaters shall be installed in all spaces. Provide a self contained electric heating unit, recessed mounted in wall or structure, with fan and heating elements. Provide control-circuit terminals and single source of power supply with disconnect. Heating wire element shall be nickel chromium. Include limit controls for overheat protection of heaters. Heater fans shall be three speeds and controlled by the thermostat. Provide tamper resistant integral thermostat.

6.6.2 SUBMITTALS

The Contractor shall submit the following for the equipment to be provided
under this section of the specification: manufacturer's data including performance characteristics at design conditions; catalog cuts showing dimensions, performance data, electrical requirements, compliance with standards as stated in paragraph CODES, STANDARDS AND REGULATIONS; drawings indicating location and installation details.

7. PLUMBING

7.1 SCOPE OF WORK.

7.1.1 GENERAL

The Contractor shall design and build domestic cold and hot water systems, waste, drain and vent systems, required in the facilities identified in Section 1010 Scope of Work and as described herein.

The work covered in this scope also includes the delivery to site, erection, setting to work, adjusting, testing and balancing and handing over in full operating condition all of the plumbing equipment and associated plumbing works.

7.1.2 SUB-CONTRACTOR QUALIFICATIONS

The plumbing systems shall be executed by a plumbing specialist subcontractor experienced in the design and construction of these types of systems.

7.1.3 STANDARD PRODUCTS
All materials and equipment shall be standard product of a manufacturer regularly engaged in the manufacture of the product and shall duplicate items that have been in satisfactory use for at least two (2) years prior to bid opening.

7.2 CODES, STANDARDS AND REGULATIONS
The design and installation of equipment, materials and work covered under the plumbing services shall conform to the following standards, codes and regulations where applicable except where otherwise indicated under particular clause(s). The publications to be taken into consideration shall be those of the most recent editions. Standards other than those mentioned herein may be accepted provided that the standards chosen are internationally recognized and meet the minimum requirements of the specified standards. The Contractor shall submit proof of equivalency if requested by the Contracting Officer.

IPC – International Plumbing Code

NFPA - National Fire Protection Association

ASHRAE – American Society of Heating, Refrigeration and Air-Conditioning Engineers

ASME – American Society of Mechanical Engineers

ASTM – American Society for Testing and Materials

AWS – American Welding Society

7.3 PLUMBING SYSTEMS REQUIREMENTS

7.3.1 WATER
Domestic cold shall be provided in the facilities to serve the water usage and plumbing fixtures provided for the facility. Water service to each facility shall enter the building via the mechanical room. The building service line shall be provided with a shut off valve installed either outside in a valve pit or inside the mechanical room or similar spaces. Water piping shall not be installed in or under the concrete foundation. All water piping shall be routed parallel to the building lines and concealed in all finished areas. Insulation shall be provided where required to control sweating of pipes or to provide protection from freezing.
Piping penetrating concrete foundation, floors and walls shall be provided with a pipe sleeve.

7.3.2 PIPING MATERIALS
Domestic water shall be distributed by means of standard weight (schedule 40) galvanized steel pipe. Waste and vent piping can be made of either galvanized steel pipe (schedule 40), or Polyvinyl Vinyl Chloride (PVC) conforming to ASTM D 2665. Corrosion protection shall be provided if galvanized piping comes in contact with earth or masonry floors, walls or ceilings.

7.3.3 PLUMBING FIXTURES
The following typical plumbing fixtures shall be provided: ALL FIXTURES AND ACCESSORIES MUST BE HEAVY INDUSTRIAL GRADE IN QUALITY AS DETERMINED AND APPROVED BY THE CONTRACTING OFFICER'S REPRESENTATIVE

a. Eastern Water Closet (P-1) with flush tank assembly. **.** Provide acid resisting fired porcelain enameled cast iron water closet complete with rotating No-Hub 'P' trap and No-Hub coupling to meet piping requirements. Eastern Style water closet shall be furnished with integral non-skid foot pads and bowl wash down non-splashing flushing rim. The water closet shall be completely self supporting requiring no external mounting hardware and shall be flush with floor. The Eastern Style water closet shall incorporate waterproofing membrane flashing flange. Provide a cold water spigot 300mm above finished floor on the right (from a perspective of standing inside of the cubicle and looking out) sidewall of the cubicle. Spigot

shall have a flexible hose and spray nozzle such that the occupant can wash over the water closet. Toilets shall be oriented north and south. Toilets shall not face east or west.

b. Lavatories (P-2). Enameled cast iron, wall or counter mounted. Brass fittings provided for water supplies. (To be used in American or Afghan/American mixed facilities only.)

c. Floor Sink (P-3). Provide floor sink, circular or square, with 300mm overall width or diameter and 250 nominal overall depth. Acid resistant enamel interior with cast iron body, aluminum sediment bucket and perforated grate of cast iron. Outlet size as indicated on plans.

d. Provide P-Traps per International Plumbing Code IPC for all fixture drains, floor and trench drains, and shower drains. P-traps shall have minimum of 50 mm water seal.

7.4 WASTE, DRAIN AND VENT SYSTEM

Floor drains shall be provided in each room that contains a water source. Floor drains shall be provided in the mechanical equipment and toilet rooms as required. Floor drains shall be provided next to the electric water heaters. All waste and vent piping shall be provided in accordance with the latest edition of IPC. Drain outlet shall use p-trap system to trap sewer gases. P-trap drain should be a one-piece system without removable parts.
Every trap and trapped fixture shall be vented in accordance with the IPC.

7.5 TESTING AND COMMISSIONING

The Contractor shall test all piping systems in accordance with IPC International Plumbing Code. The final test shall include a smoke test for drainage and vent system and pressure test for the domestic water piping. After completing the work, the Contractor shall demonstrate that all plumbing systems operate to fully satisfy the function for which these systems have been designed. The Contractor shall test, adjust, balance and regulate the system and its controls as necessary until the required designed conditions are met. The Contractor shall include tests for interlocks, safety cutouts and other protective devices to demonstrate safe operation. All such tests shall be carried out in the presence of the Contracting Officer and full written records of the test data and final settings shall be submitted to the Contracting Officer. After all tests are complete, the entire domestic hot and cold water distribution system shall be disinfected. The system shall not be accepted until satisfactory bacteriological results have been obtained.

8. FIRE PROTECTION

8.1 GENERAL

Facility construction and fire protection systems shall be installed in accordance with the publications listed herein and the publications referenced therein. Where a conflict occurs among various criteria, the more stringent requirement shall take precedence.

8.2 BUILDING CONSTRUCTION

Building construction shall conform to fire resistance requirements, allowable floor area, building height limitations and building separation distance requirements of the building code. All corridor walls shall be one hour fire rated; all corridor doors shall be 20 minute fire rated. All storage and electrical room walls shall be one hour fire rated with 45 minute rated fire doors. There is no sprinkler protection system for this facility.

8.3 LIFE SAFETY

Facilities features will be provided in accordance with NFPA 101, among other references, to assure protection of occupants from fire or similar emergencies.

8.4 FIRE PROTECTION EQUIPMENT

All fire protection equipment shall be listed by Underwriters' Laboratories (UL) or approved by Factory Mutual (FM) or equivalent as determined by the COR and shall be listed in the current UL Fire Protection Equipment Directory or Factory Mutual Approval Guide or equivalent. Contractor is responsible to prove fire protection equipment is equal to the UL or FM standards.

8.5 FIRE ALARM AND DETECTION

Smoke detection– see electrical section for more fire alarm and detection details. Smoke detectors are required by NFPA 101 and 72. Smoke detectors shall have back up battery power and be installed according to all applicable fire protection codes. Smoke detectors shall be two-wire photo-electric type. Fire alarm evacuation systems shall be provided as required by NFPA 101 or IBC and listed herein. Smoke detection is hard wired, all cabling in conduit, supported by no more than 3000 mm intervals to the conventional Fire Alarm Control Panel (FACP). The FACP shall be located near the building main entrance. Manual pull stations for alarm activation shall be located within 1500 mm of each exterior exit. Pull stations shall accompany with alarm bells. Bell audible signal shall be at 85 dB level. The alarm system shall be class B, style C as described in the NFPA 72.

8.6 WATER SUPPLY FOR FIRE PROTECTION

A dedicated fire protection water supply is unavailable.

8.7 PORTABLE FIRE EXTINGUISHERS

Portable fire extinguishers shall be provided inside all facilities and at exterior locations as required in accordance with NFPA 10. Generally, extinguishers will be of the multi-purpose dry chemical type except for occupancies requiring a special type extinguisher (e.g., carbon dioxide portable fire extinguishers for electrical rooms and laboratories).

9. ELECTRICAL

9.1 GENERAL

Contractor shall design and construct all electrical systems for the facility. This includes design, construction, all necessary labor, equipment, and material for a fully functional system. Secondary electrical distribution system shall be 220/380 volt, 3-phase, 4 wire, 50 hertz. Design of the electrical system within facilities shall include, but is not limited to (a) interior secondary power distribution system, (b) lighting and power branch circuit and devices, and (c) fire detection and alarm system. All systems shall be designed for the ultimate demand loads, plus 25% spare capacity.

9.2 DESIGN CRITERIA

9.2.1 APPLICABLE STANDARDS

a. Design shall be in the required units as stipulated herein.
b. Conflicts between criteria and/or local standards shall be brought to the attention of the Contracting Officer for resolution. In such instances, all available information shall be furnished to the Contracting Officer for approval.
c. All electrical systems and equipment shall be installed in accordance with NFPA code requirements.
d. Acceptance Testing: Contractor shall develop and submit for approval complete acceptance test procedures on all systems provided. As a minimum the testing procedures shall comply with the requirements of NFPA 70 (NEC) and International Electrical Testing Association Inc. (NETA).
e. Any other applicable references listed herein, including the following:

ANSI/IEEE Std 81-1983
ANSI/NETA ETT-2000
ANSI/NETA MTS 7.2.2-2001
ANSI/TIA/EIA-568 Commercial Building Telecommunications Cabling Standard
ANSI/TIA/EIA-569 Commercial Building Standard for Telecommunication Pathways and Spaces
EIA ANSI/TIA/EIA-607: (1994) Commercial Building Grounding/Bonding Requirement Standard.
ETL 1110-3-412 Transformer Application Guide
ETL 1110-3-502, Telephone and Network Distribution System Design and Implementation Guide.
Factory Mutual (FM) Approval Guide-Fire Protection (2002).
IBC - International Building Code
IMC – International Mechanical Code
IPC – International Plumbing Code
IEEE C2 National Electrical Safety Code (NESC)
IEEE 48 IEEE Standard Test Procedures and Requirements for Alternating- Current Cable Terminations 2.5 kV

Through 765 Kv
IEEE Std 62™-1995 (R2005)
IEEE Std 81.2-1991
IEEE 100
IEEE 241 - 1990
IEEE 242 - 2001
IEEE standard 400-1991
IEEE standard 519-1992
IEEE C57.12.22
IEEE C57.12.34
IEEE C57.12.28
IEEE C57.12.80
IESNA Lighting Handbook
International Electrical Testing Association Inc. (NETA) Acceptance Testing Specifications for Electrical Power Distribution Equipment and Systems
NFPA 10, Portable Fire Extinguishers
NFPA 70, National Electrical Code
NFPA 72, National Fire Alarm Code, 2002 edition
NFPA 90A, Air Conditioning and Ventilating Systems, 2002 edition
NFPA 101, Life Safety Code, 2003 edition
NFPA 780, Lightning Protection
TM 5-811-3 Electrical Design: Lightning and Static Electricity Protection
UFC 3 410-01FA Heating, Ventilating and Air Conditioning
UFC 3 410-02A Heating, Ventilation and Air Conditioning (HVAC) Control Systems
UFC 3-520-01 Interior Electrical Systems, 10 June 2002
UFC 3-530-01AN Design: Interior and Exterior Lighting and Controls 19 Aug 2005
UFC 3-550-03FA Electrical Power Supply and Distribution
UFC 3-600-01 Fire Protection Engineering for Facilities
Underwriters' Laboratories (UL) Fire Protection Equipment Directory (2002).

9.3 MATERIAL

9.3.1 GENERAL
Unless noted otherwise, all material used shall be in compliance with the requirements of UL standards. In the event that UL compliant materials are not available, Contractor may then select applicable British Standards (BS), IEC, CE, CSA, GS, DIN listed material (or equivalent), but the contractor must prove equivalence and must provide the government with a full copy of the relevant specification(s)/standard(s). Material and equipment installed under this contract shall be for the appropriate application and installed in accordance with manufacturers recommendations.

Equipment enclosure types shall be in compliance with the National Electrical Manufacturer's Association (NEMA) or the International Electro-Technical Committee (IEC) standards.

Material and equipment installed under this contract shall be for the appropriate application. Materials and equipment shall be installed in accordance with recommendations of the manufacturer. Major components of equipment shall have the manufacturer's name, address, type or style, voltage and current rating, and catalog number on a non-corrosive and non-heat sensitive plate, securely attached to the equipment. All equipment delivered and placed in storage, prior to installation, shall be protected from the weather, humidity and temperature variation, dirt and dust, and any other contaminants. All equipment shall be in new condition, undamaged and unused.

9.3.2 STANDARD PRODUCT
All material and equipment shall be a standard product of a manufacturer regularly engaged in the manufacture of the product and shall essentially duplicate items that have been in satisfactory use for at least two (2) years prior to bid opening.

9.3.3 DESIGN CONSITIONS
All equipment shall be rated and designed for 49 degrees Celsius (120 degrees Fahrenheit) and minimum elevation of 1800 meters (6000 feet) above sea level.

9.3.4 RESTRICTIONS
Aluminum conductors shall not be specified or used. Aluminum windings shall not be used in transformers.

Transformer(s) shall be ANSI-style, pad-mounted, dead front type. "Pad mount", "dead front" and "pad mount, dead front transformer" are defined and described in the IEEE standards listed above in the standards section.

9.4 DESIGN REQUIREMENTS

9.4.1 ELECTRICAL DISTRIBUTION SYSTEM
Contractor shall perform a load calculation to determine the number of required transformers or generators to feed the facilities in this project with the required spare capacity. In the event the existing transformer(s), if present, cannot support the load of the entire facilities package, the contractor shall notify the Contracting Officer. In such instances the contractor shall provide all the information regarding the required number of the new transformers to the Contracting Officer. Design and installation of any additional feeders required from the ATS(s) will be the responsibility of the contractor. Contractor shall limit power interruption to other services already connected. All wiring shall be run and pulled through conduits.

On-site generator power: Generator shall be provided for on site power when power from a local grid is unavailable or is unreliable for providing power 24 hours a day. Generator shall be pad mounted within an enclosure rated for exterior use. Generator shall be fitted with load bank matched to the load. Generator shall be sized for total electrical load plus twenty five percent (25 %) spare capacity minimum. Fuel storage capacity shall be based on usage at total electrical load for a minimum of 30 days at full load for the entire duration. Fuel storage shall either be in aboveground single wall steel tank(s) with containment pit or underground double wall with leak detection. The contractor shall provide and install properly sized service entrance feeder from the generator system to the service entrance equipment located inside the facility. Service entrance equipment shall include a distribution panel board properly sized to feed the facility. Contractor shall coordinate with the Contracting Officer in locating the main distribution panel board(s) as close as possible to the corresponding ATS.

Existing or FUTURE electrical distribution grid (including prime power): Contractor shall connect to local power grid and install generator to provide backup for the local utility supply when service is unreliable 24 hours a day. Transformers shall be sized at 125% of the total calculated demand load. Transformers shall be fully enclosed, outdoor rated, dead-front type, complete from a single manufacturer. Backup generator shall be sized to provide backup power for 125% of the maximum calculated demand load.

All panel boards shall be circuit breaker 'bolt-on' type panels. Minimum size circuit breaker shall be rate at no less than 20-amperes. Circuit breakers shall be connected to bus bar(s) within the panel boards. Daisy chain (breaker-to-breaker) connection(s) are not acceptable. Indoor distribution panels shall be flush mount in finished areas and surface mounted in unfinished areas. All circuit breakers shall be labeled with an identification number corresponding to the panel schedule. A 3-pole circuit breaker shall be a single unit and not made up of 3 single pole circuit breakers connected with a wire or bridged to make a 3-pole breaker. All wiring shall be copper, minimum 4.0mm sq (# 12 AWG) installed in metal conduit. Wiring shall be recessed in finished areas and surface mounted in unfinished areas. Flush mounted panels shall be provided with spare empty conduits from panel to unfinished area for future use. All panels shall be provided with a minimum of 25% spare capacity for future load growth. Electrical receptacles shall be duplex type 220 V, 50 hertz, type CEE 7/7 with Earth Ground rated for 20A or better and shall be compatible with the required secondary power. All splicing and terminations of wires shall be performed in junction or device boxes. Proper wire nuts/connectors shall be used for splicing wire. No twist-wire connections with electrical tape wrapped around it will be accepted. All electrical installations shall be in accordance with NFPA 70 (National Electric Code). For large panels, 225 Ampere and above, provide an ammeter, voltmeter and kilowatt-hour meter to monitor energy usage. A selector switch shall be provided for reading all 3 phases. Circuits shall be provided for all mechanical equipment and final connections made. Receptacle locations shall be coordinated with architectural requirements.

Contractor shall provide circuits for all mechanical equipment and any other equipment that requires power and make the final connections.

All loads shall be coordinated to provide balanced loading. Phase imbalance at each panel shall not exceed 5%.

Voltage Drop for branch circuits shall be limited to no more than 3%; voltage drop for branch and feeder circuits combined shall be limited to no more than 5%.

All circuit breakers shall use down-stream coordination to ensure the breaker nearest a fault or overload is the first to trip.

9.4.2 LIGHTING

Design levels shall be per IES standards as a minimum. For convenience, the following lighting level table is listed. Note: all spaces listed below may not be within the work required within this contract.

Classrooms/Labs	50 FC (500 Lux)
Toilets, Showers, Latrines, washrooms	20 FC (200 Lux)
Mechanical/Electrical rooms	15 FC (160 Lux)
Corridors and Stairways	20 FC (200 Lux)
Offices (private)	50 FC (500 Lux)
Offices (open)	30 FC (300 Lux)
Egress path (incl. exterior)	01 FC (10 Lux)
Areas adjacent to egress path	0.05 FC (0.5 Lux)
Auditoriums (assembly)	20 FC (220 Lux)

Indoor lighting for all areas shall consist of fluorescent light fixtures. Exterior lighting shall be installed at all three building exits. Moisture resistant/waterproof fluorescent light fixtures shall be provided in high humidity and wet areas such as latrines and showers. Battery powered 'emergency' and 'exit' lights shall be provided within each building, as applicable, for safe egress during a power outage. All light fixtures shall be factory finished, complete and operational, to include but not be limited to, lens, globe, lamp, ballast etc. Industrial type fluorescent light fixtures shall not be used. Every room shall be provided with a minimum of one light switch. Light fixtures shall be mounted approximately 2.5-meters (8 feet) above finished floor (AFF), minimum. Fixtures are pendant or ceiling mounted depending on the ceiling type and height.

9.4.3 LIGHT FIXTURES

Lighting fixtures shall be a standard manufacturer's product. Fluorescent mounted light fixtures shall be power factor corrected and equipped with standard electronic ballast(s). All light fixtures shall properly operate using standard lamps available locally. Fixtures shall be fully factory wired and designed for appropriate application, i.e. appropriate for the location where installed.

9.4.4 EMERGENCY "EXIT" LIGHT FIXTURES

Emergency "EXIT" light fixture shall be provided in accordance with NFPA requirements. Fixtures shall be for wall/ceiling mounting. Unit shall illuminate continuously and be provided with self-contained nickel cadmium battery pack, to operate on floated-battery or trickle charge circuit. Fixture shall operate satisfactorily for 90 minutes during a power outage. Unit shall have test/re-set and lamp failure indication buttons. Primary operating voltage shall be 220 volts. Lettering "EXIT" shall be color red and not less than 6 inches (150 mm) in height and on matte white background in English and or local language. Illuminations shall be with LEDs.

9.4.5 ABOVE MIRROR LIGHTS

Above mirror lights shall be provided in toilet rooms.

9.4.6 EMERGENCY LIGHTING

Battery powered emergency lights shall be provided within each building per NFPA for safe egress during power

outage. Fixtures shall be provided with self-contained nickel cadmium battery pack to operate on stand-by circuit for 90-minute minimum. Unit shall have test/re-set and lamp failure indication buttons. Primary operating voltage shall be 220 volts. Emergency lighting fixtures shall be connecting to normal lighting system.

9.4.7 LIGHT SWITCHES

Light switch shall be single pole. Minimum of one light switch shall be provided in every room. Lighting in large rooms/areas may be controlled from multiple switches. Three-way lighting shall be provided in all rooms / areas with multiple entrances.

9.4.8 RECEPTACLES

General-purpose receptacles shall be as required herein. All receptacles shall be duplex, unless otherwise specified in this section, section 01010, the NEC, or other referenced standard.
Receptacles shall be placed at maximum 3-meter (10 feet) intervals in general or as shown on the drawings. Areas with computer work-stations or similar equipment will have additional receptacles. Sinks will have a receptacle above, with one dual receptacle serving two sinks that are side-by-side. Receptacles in wet/damp areas or within 2 meter (~6 feet) of sinks, lavatories, etc shall be ground fault circuit interrupter (GFCI) type or Residual Current Disconnect (RCD) type, with the trip setting of 10 milliamperes or less. Total number of duplex receptacles shall be limited to six (6) per 20-ampere circuit breaker.

9.4.9 CONDUCTORS

All cable and wire conductors shall be copper. Conductor jacket or insulation shall be color coded to satisfy NEC requirements. The use of 75 or 90 degree C (minimum) terminals and insulated conductors is required. Use of 75 degree C conductors on circuits with protective device terminals rated for 60 degree C is inappropriate.

9.4.10 GROUNDING AND BONDING

Grounding and bonding shall comply with the requirements of NFPA 70. Underground connections shall be exothermal welded. All exposed non-current carrying metallic parts of electrical equipment in the electrical system shall be grounded. Insulated grounding conductor (separate from the electrical system neutral conductor) shall be installed in all feeder and branch circuit raceways. Grounding conductor shall be green-colored, unless the local authority requires a different color-coded conductor. Ground rods shall be copper-clad steel. Final measurement of the ground resistance shall be in compliance with the requirements of the local authority but shall not exceed 25 ohms when measured less than 48 hours after rainfall.

9.4.11 ENCLOSURES

Enclosures for exterior and interior applications shall be NEMA Type 3S (IEC Classification IP54) and NEMA Type 1 (IEC Classification IP10), respectively.

9.4.12 FIRE DETECTION & ALARM SYSTEM

A complete Fire Detection and Alarm System shall be provided throughout the buildings and installed in accordance with NFPA 72 requirements. System shall include, but shall not be limited to, addressable Fire Alarm Control Panel (FACP), manual pull stations, horns, strobes, and smoke and/or heat detectors with alarm verification feature. Fire alarm system shall be complete and a standard product of one manufacturer. All fire alarm system cabling shall be metal mounted conduit, supported at no more than 3000 mm intervals.

9.4.13 TRANSIENT VOLTAGE SURGE SUPPRESSION (TVSS)

Transient Voltage Surge Suppression shall be provided utilizing surge arresters to protect sensitive and critical equipment. At a minimum, TVSS protection shall be provided at each panel. It is recommended that Metal Oxide Varistors (MOV) technology be used for such application.

9.4.14 CONDUIT RACEWAY SYSTEM

Metal conduit system shall be complete, to include but not limited to, necessary junction and pull-boxes. Smallest conduit size shall be no less than 20mm (0.75 inch) in diameter. All empty conduits shall be furnished with pullwire. System design and installation shall be per NFPA 70 requirements. Exterior conductors shall be installed in PVC conduit at a depth below the frost line, but not less than 24-inches.

9.4.15 IDENTIFICATION NAMEPLATES
Major electrical equipment, such as transformers, panel boards, and load centers, etc. shall be provided with permanently installed engraved identification nameplates.

9.4.16 SCHEDULES
All panel boards and load centers shall be provided with a panel schedule. Schedule shall be typed written in English.

9.4.17 SINGLE LINE DIAGRAM
Complete single line diagrams shall be provided for all systems installed. All major items in each system shall be identified and labeled for respective rating. Single line diagrams for each system, installed in a clear plastic frame, shall be provided.

10. COMMUNICATIONS – Public Address, Telecommunications, and Data Distribution

10.1 GENERAL
The Contractor shall provide a data cabling system with conduit for computer systems. The Contractor shall provide two telephone/data boxes for workstations in offices. Conference rooms shall have two telephone/data boxes on each interior wall, three interior walls per conference room. Each box shall have dual RJ-45 outlets, one for telephone and one for data. Interior copper cable to each outlet shall be 4 pair, unshielded twisted pair (UTP), Category 5e or better. Two runs of Category 5e (UTP) or better data cable shall be installed from each junction box back to the patch panel in the communications room and labeled on both ends with room number and jack number. Contractor shall be responsible for providing one enclosed 480 mm wide, 1800 mm tall communications equipment rack with top-mounted cooling fans and front & rear closing doors. Contractor shall provide two 480 mm 48-port patch-panel mounted in the rack. Contractor shall coordinate the location of the communications rack (first or second floor) with the Contracting Officer Representative (COR). Corps of Engineers Representative (COR) shall punch-down the Category 5e cabling at both the patch panel and at the data/communications jacks in the bedrooms/offices/workstations/conference rooms. Termination configuration shall be EIA/TIA T568B. A Corps of Engineers representative shall test each cable run and data jack after it has been installed. Two 100 mm empty conduits shall be provided from the communications room to the outside to facilitate future telephone cabling installation into the building. Two additional 100 mm empty conduits shall be provided between the communications rooms on each floor. Provide all empty conduits with a pull rope. The system shall provide cable connection from the location identified on the drawings for the communications equipment. The computer equipment is to be provided by others. The incoming communications cabling connection to the building is to be provided by others. The Contractor's system shall be fully capable of interface with the future equipment and future connection to the site and data systems. The contractor is to submit a computing cable plan with conduit as part of the design submittal, based upon the individual requirements of each project location site. Properly sized metallic conduit shall be used as appropriate to distribute the telephone/data cabling throughout the building. Minimum conduit size shall be 20 mm inside diameter. Data/communications face plates shall be surface mounted to the wall.

10.2 PUBLIC ADDRESS
The Contractor shall provide a commercial grade Public Address system, with control panel located in the Administrative area. Each occupied space shall have a speaker in addition to the corridor speakers as noted on the drawings, to include all cabling and conduits. System shall be procured complete as one package from commercial manufacturer, delivered to site and installed. Public address speaker zoning shall be determined at each site as directed by the COR. Public address panel shall be capable of providing at least 5 zones. Public address system is separate and not connected to the fire alarm or any other system. All cabling shall be installed in metal conduit, exposed. Surface mounted conduits shall be supported at no greater than 3000 mm intervals.

- END OF SECTION -

SECTION 01060 SPECIAL CLAUSES

PART 1 GENERAL

1.1 PRECONSTRUCTION CONFERENCE

1.1.1 Schedule of Meeting

At the earliest practicable time, prior to commencement of the work, the Contractor and any Subcontractors whose presence is necessary or requested, shall meet in conference with representatives of the Contracting Officer to discuss and develop a mutual understanding relative to the details of the administration and execution of this contract. This will include but not necessarily be limited to the Contractor's Quality Control (CQC) Program, the Contractors Accident Prevention Program, submittals, correspondence, schedule, access to the work site, security requirements, interface requirements, temporary facilities and services, hazards and risks, working after normal hours or on weekends or holidays, assignment of inspectors, representations, special requirements, phasing, and other aspects of this project that warrant clarification and understanding.

1.1.2 Meeting Minutes

It shall be the responsibility of the Contractors CQC System Manager to prepare detailed minutes of this meeting and submit those minutes to the Contracting Officer for approval within three (3) workdays. Any corrections deemed necessary by the Contracting Officer shall be incorporated and resubmitted within two (2) calendar days after receipt. Upon approval of the minutes by the Contracting Officer, the Contractor shall distribute the minutes to all parties present or concerned.

1.2 AREA USE PLAN

The Contractor shall submit to the Contracting Officer, within ten (10) calendar days after award of this contract, an Area Use Plan designating intended use of all areas within the project boundaries. This plan shall include, but not necessarily be limited to the following: the proposed location and dimensions of any area to be fenced and used by the Contractor; construction plant and building installations/the number of trailers and facilities to be used; avenues of ingress/egress to the fenced areas and details of the fence installation; drawings showing temporary electrical installations; temporary water and sewage disposal installations; material storage areas; hazardous storage areas. Any areas that may have to be graveled shall also be identified. The plan shall also include a narrative description of the building structural system, the site utility system and the office or administration facilities. The Contractor shall also indicate if the use of a supplemental or other staging area is desired. The Contractor shall not begin construction of the mobilization facilities prior to approval by the Contracting Officer of the Area Use Plan described herein.

1.3 CONTRACTOR'S MOBILIZATION AREA

The Contractor will be permitted to use an area designated by the Contracting Officer within the contract limits for operation of his construction equipment and plants, shops, warehouses, and offices. The Contractor is responsible for obtaining any required additional mobilization area above that designated. The construction site shall be cleared of construction debris and other materials and the area restored to its final grade.

1.3.1 Contractor's Temporary Facilities

1.3.1.1 General

All facilities within the Contractor's mobilization area shall be of substantial construction suitable for the local weather conditions. Sanitary facilities shall meet the requirements of Corps of Engineers, Safety and Health Requirements Manual EM 385-1-1. Local nationals will not be granted any privileges under this contract.

1.3.1.2 Administrative Field Offices

The Contractor may provide and maintain administrative field office facilities within the mobilization area at the designated site. Government office and warehouse facilities will not be available to the Contractor's personnel.

1.3.1.3 Storage Area

The Contractor shall construct a temporary 1.8 meter (6 foot) high chain link fence around trailers and materials. The fence shall include plastic strip inserts, colored green or brown, so that visibility through the fence is obstructed. Fence posts may be driven, in lieu of concrete bases, where soil conditions permit. Trailers, materials, or equipment shall not be placed or stored outside the fenced area unless approved in writing by the Contracting Officer.

1.3.1.4 Plant Communication

Whenever the Contractor has the individual elements of its plant so located that operation by normal voice between these elements is not satisfactory, the Contractor shall install a satisfactory means of communication, such as telephone or other suitable devices. These devices shall be made available for use by Government personnel.

.

1.3.1.5 Appearance of Mobilization Site Facilities and/or Trailers

Mobilization Site Facilities and/or Trailers utilized by the Contractor for administrative or material storage purposes shall present a clean and neat exterior appearance and shall be in a state of good repair. Trailers or other transportable structures which, in the opinion of the Contracting Officer, require exterior painting or maintenance will not be allowed on the construction site until such work or maintenance has been performed to the satisfaction of the Contracting Officer.

1.3.1.6 Maintenance of Storage Area

Fencing shall be kept in a state of good repair and proper alignment. Should the Contractor elect to traverse unpaved areas which are not established roadways with construction equipment or other vehicles, such areas shall be covered with a layer of gravel as necessary to prevent rutting and the tracking of soil onto paved or established roadways; gravel gradation shall be at the Contractor's discretion.

1.3.1.7 Security Provisions

Adequate outside security lighting shall be provided at the Contractor's temporary facilities. The Contractor shall be responsible for the security of its own facilities and equipment.

1.3.1.8 Sanitation

a. Sanitary Facilities: The Contractor shall provide portable sanitation facilities for the Contractor’s use. The Contractor shall be responsible for maintaining such facilities at no expense to the Government.

b. Trash Disposal: The Contractor shall be responsible for collection and disposal of trash from the work areas and from the mobilization area. General construction debris and demolition debris shall be collected and transported by the Contractor to a location designated by the Government. Construction debris, waste materials, packaging material and the like shall be removed from the work site daily. Loose debris capable of being windblown, shall be immediately placed in sealed or covered containers to prevent it from being blown onto taxiways or runways. Any dirt or soil that is tracked onto paved or surfaced roadways shall be cleaned daily. Materials resulting from demolition activities that are salvageable shall be stored within the fenced area described above. Stored material not indoors, whether new or salvaged, shall be neatly stacked when stored.

1.3.1.9 Telephone

The Contractor shall make arrangements to install and pay all costs for telephone facilities desired.

1.3.1.10 Restoration of Storage Area

Upon completion of the project and after removal of mobilization facilities, trailers, materials, and equipment from within the fenced area, the fence shall be removed and will become the property of the Contractor. Areas used by the Contractor for the storage of equipment or material, or other use, shall be restored to the original or better condition. Gravel used to traverse unpaved areas shall be removed and all such areas restored to their original conditions.

1.3.2 Protection and Maintenance of Traffic

During construction the Contractor shall provide access and temporary relocated roads as necessary to maintain traffic. The Contractor shall maintain and protect traffic on all affected roads during the construction period except as otherwise specifically directed by the Contracting Officer. Measures for the protection and diversion of traffic, including the provision of watchmen and flagmen, erection of barricades, placing of lights around and in front of equipment and the work, and the erection and maintenance of adequate warning, danger, and direction signs, shall be as required by the Host Nation and base authorities having jurisdiction. The traveling public shall be protected from damage to person and property. The Contractor's traffic on roads selected for hauling material to and from the site shall interfere as little as possible with base traffic. The Contractor shall investigate the adequacy of existing roads and the allowable load limit on these roads. The Contractor shall be responsible for the repair of any damage to roads caused by construction operations.

1.3.2.1 Use of Existing Roads as Haul Routes

The Contractor shall be responsible for coordinating with the local authorities for use of any existing roads as haul routes. Construction, and routing of new haul roads, and/or upgrading of existing roads to carry anticipated construction traffic shall be coordinated with the Base authorities and is the sole responsibility of the Contractor.

1.3.3 Temporary Project Safety Fencing and Barricades

The Contractor shall impose all measures necessary to limit public access to hazardous areas and to ensure the restriction of workers to the immediate area of the construction and mobilization site. The Contracting Officer may require in writing that the Contractor remove from the work any employee found to be in violation of this requirement.

1.3.3.1 Barricades

Barricades shall be required whenever safe public access to paved areas such as roads, parking areas or sidewalks is prevented by construction activities or as otherwise necessary to ensure the safety of both pedestrian and vehicular traffic. Barricades shall be securely placed, clearly visible with adequate illumination to provide sufficient visual warning of the hazard during both day and night. Travel to and from the project site shall be restricted to a route approved by the Contracting Officer.

1.3.4 Host Nation Authorizations, Permits and Licenses

It shall be the Contractor's responsibility to obtain such local authorizations, permits and licenses necessary to establish his quarry operations, batching operations and haul routes (See Special Clause entitled: COMPLIANCE WITH HOST COUNTRY RULES AND CUSTOMS).

1.3.5 Construction Signs

At each construction site the contractor shall fabricate and install a display sign marked with the US Agency for International Development (USAID) red, white, and blue emblem. The sign shall be erected at an early date in the construction phase and be replaced by a permanent sign, plate or plaque, marked with the USAID red, white, and blue emblem, at the end of construction. The signs and plaques must be professionally fabricated of high quality materials as approved by the Contracting Officer. The layout and design of the signs and plaques will be provided to the contractor by the government at the pre-construction meeting.

1.4 RESPONSIBILITY FOR PHYSICAL SECURITY

Prior to mobilization, the Contractor shall submit his proposed means of providing project security to prevent unauthorized access to equipment, facilities, materials and documents, and to safeguard them against sabotage, damage, and theft. The Contractor shall be responsible for physical security of all materials, supplies, and equipment of every description, including property which may be Government-furnished or owned, for all areas occupied jointly by the Contractor and the Government, as well as for all work performed.

1.5 DUST CONTROL

The Contractor shall be required to control objectionable dust in the work areas, access roadways, and haul roads by means of controlled vehicle speeds or dust palliatives. Vehicles transporting sand, cement, gravel or other materials creating a dust problem shall be covered, as directed by the Contracting Officer, or in accordance with local Laws, codes, and regulations.

1.6 DIGGING PERMITS

1.6.1 Existing Underground Utilities

The Contractor shall exercise utmost care in researching locations of existing utilities and reducing damage to existing utilities. Any utilities damaged by the Contractor shall be promptly repaired by the Contractor. The Contracting Officer will review and approve any proposed repairs. Any damage to existing utilities will be immediately reported to the Contracting Officer.

1.7 CONNECTIONS TO EXISTING UTILITIES

1.7.1 General

Any outage involving disruption of electrical service beyond the site area shall be requested in writing at least ten (10) days in advance of the date requested for the commencement of the outage. The Contractor shall provide a request, detailing the type of outage needed (water, sewer, electrical, steam, etc.), the time needed to perform the work, the reason for the outage, and the known affected facilities. The Contracting Officer shall be contacted prior to the outage to confirm the time and date. If the Contractor fails to initiate work at the approved time, the Contracting Officer may cancel the approved outage and may direct the Contractor to resubmit a new request. No part of the time lost due to the Contractors failure to properly schedule an outage shall be made the subject of claim for extension of time or for excess costs or damages by the Contractor.

1.7.1.1 Not used.

1.7.1.2 Exterior Night Lighting

Exterior night lighting shall be provided in conformance with EM-385-1-1 entitled Safety and Health Requirements Manual.

1.7.2 Existing Underground Utilities

The Contractor is provided notice that existing utilities may be present in the construction area. The Contractor shall exercise the utmost care in researching locations of existing utility lines by implementing control measures

to eliminate, or reduce to a level acceptable to the Contracting Officer, the chance of damaging or destroying existing utilities.

1.7.2.1 Use of Underground Utility Detecting Device

Prior to any excavation, a metal and/or cable-detecting device shall be used along the route of the excavation. All underground utilities discovered by this method will be flagged a minimum distance of one-half (1/2) meter on each side of the location.

1.7.2.2 Hand Excavation

Hand excavation methods and special supervisory care shall be used between any flagged markers, in areas of known or suspected hazards, and in areas known or suspected to have multiple and/or concentrated utility lines or connections.

1.7.3 Repair of Damaged Utilities

The Contractor shall be responsible to repair any utilities damaged by him. The method of repair and schedule for performance of the repair shall be coordinated with, and subject to the approval of, the Contracting Officer. The repair work and any temporary work required to keep the system operational while repairs are being completed, shall be performed at no cost to the Government.

1.8 WATER

The Contractor shall install and maintain necessary supply connections and piping for same, but only at such locations and in such manner as may be approved by the Contracting Officer. Water required for final testing, adjusting and balancing of HVAC systems will be furnished by the Government. Before final acceptance of systems, or facilities, all temporary connections and piping installed by the Contractor shall be removed at his expense in a manner satisfactory to the Contracting Officer.

1.9 NOT USED

1.10 ELECTRICITY (CONTRACTOR PROVIDED)

Electrical service is not available for use under this contract; therefore all electric current required by the Contractor shall be the responsibility of the Contractor, furnished at his own expense. The Contractor shall provide diesel generators to meet his demand requirements. The means of doing so, such as by temporary distribution systems, shall be the responsibility of the Contractor. All temporary connections for electricity shall be subject to the approval of the Contracting Officer and shall comply with Corps of Engineers manual EM 385-1-1 entitled Safety and Health Requirements Manual. All temporary lines shall be furnished, installed, connected and maintained by the Contractor in a workmanlike manner satisfactory to the Contracting Officer. Before final acceptance of systems, or facilities, all temporary connections installed by the Contractor shall be removed at his expense in a manner satisfactory to the Contracting Officer.

1.11 WORK OUTSIDE REGULAR HOURS

If the Contractor desires to carry on work outside regular duty hours, or on holidays (including the following U.S. holidays: New Year's Day, Martin Luther King Jr's Birthday, George Washington's Birthday, Memorial Day, Independence Day, Labor Day, Columbus Day, Veteran's Day, Thanksgiving and Christmas), he shall submit an application to the Contracting Officer. The Contractor shall allow ample time to enable satisfactory arrangements to be made by the Government for inspecting the work in progress. At night, exterior lighting shall be provided in conformance with EM-385-1-1 entitled "Safety and Health Requirements Manual".

1.12 NOT USED

1.13 NOT USED

1.14 NOT USED

1.15 CERTIFICATES OF COMPLIANCE

Any certificates required for demonstrating proof of compliance of materials with specification requirements shall be executed in accordance with Section 01335 SUBMITTAL PROCEDURES FOR DESIGN/BUILD. Each certificate shall be signed by an official authorized to certify in behalf of the manufacturing company involved and shall contain the name and address of the Contractor, the project name and location, description and the quantity of the items involved, and date or dates of shipment or delivery to which the certificates apply. Copies of laboratory test reports submitted with certificates shall contain the name and address of the testing laboratory and the date or dates of the tests to which the report applies. Certification shall not be construed as relieving the Contractor from furnishing satisfactory material.

1.16 ACCIDENT PREVENTION

The Contractor shall comply with all applicable Host Country laws and with such additional measures as the Contracting Officer may find necessary in accordance with CONTRACT CLAUSE 52.236-13 entitled ACCIDENT PREVENTION (NOV1991)-ALTERNATE 1 (APR 1984). Applicable provisions of the Corps of Engineers manual entitled Safety and Health Requirements Manual EM 385-1-1 will be applied to all work under this contract. The referenced manual may be obtained from the Contracting Officer at the jobsite or from the Afghanistan Engineer District at Kabul, Afghanistan.

1.16.1 Accident Prevention Program

Within fifteen (15) days after award of this contract, and at least ten (10) days prior to the accident prevention pre-work conference, four (4) copies of the Accident Prevention Plan required by the CONTRACT CLAUSE 52.236-13 entitled ACCIDENT PREVENTION (NOV 1991)- ALTERNATE I shall be submitted for review by the Contracting Officer. The Contractor shall not commence physical work at the site until the Accident Prevention Plan (APP) has been reviewed and accepted by the Contracting Officer. The APP shall meet the requirements listed in Appendix "A" of EM385-1-1. The program shall include the following: TAC Form 61 " Accident Prevention Program Hazard Analysis (Activity Hazard Analysis)" fully completed and signed by an executive officer of the company in block No. 13. The Activity Hazard Analysis is a method in which those hazards likely to cause a serious injury or fatality are analyzed for each phase of operations. Corrective action is planned in advance, which will eliminate the hazards. An analysis is required for each new phase of work. On large or complex jobs the first phase may be presented in detail with the submittal of the Accident Prevention Plan rather than presenting the complete analysis. If the plan is to be presented in phases, a proposed outline for future phases must be submitted as a part of the initial Accident Prevention Plan submittal. Accident Prevention Plans will be reviewed for timeliness and adequacy at least monthly with a signature sheet signed and dated documenting that these reviews took place. Copy of company policy statement of Accident Prevention and any other guidance as required by EM 385-1-1, Appendix A.

1.16.2 Ground Fault Circuit Interrupter (GFCI) Requirement – Overseas Construction

The Corps of Engineers Health and Safety Manual, EM 385-1-1, section 11.C.05.a. states: "The GFCI device shall be calibrated to trip within the threshold values of 5 ma +/- 1 ma as specified in Underwriters Laboratory (UL) Standard 943." A variance from USACE has been granted allowing 10 ma, in lieu of 5 ma, for overseas activities that use 220 Volts (V)/50 hertz (Hz) electrical power.

1.16.3 Temporary Power - Electrical Distribution Boxes

EM 385-1-1 section 11.A.01.a. states, "All electrical wiring and equipment shall be a type listed by a nationally recognized testing laboratory for the specific application for which it is to be used." This includes temporary electrical distribution boxes. Locally manufactured electrical boxes will not be allowed. Only manufactured

electrical distribution boxes that meet the European CE requirements, with 10 ma CE type GFCIs installed shall be allowed.

Contractors shall:

a. Make no modifications that might void any CE or manufacturer certification.

b. Test the installed systems to demonstrate that they operate properly and provide the 10 ma earth leakage protection.

c. Ensure GFCIs will have an integral push-to-test function. The testing shall be performed on a regular basis.

d. Check that proper grounding is checked regularly and flexible cords, connectors, and sockets inspected before each use.

1.17 HAZARDOUS MATERIALS

Should the Contractor encounter asbestos or other hazardous materials, during the construction period of this contract, he shall immediately stop all work activities in the area where the hazardous material is discovered. The Contractor shall then notify the Contracting Officer; identify the area of danger; and not proceed with work in that area until given approval from the Contracting Officer to continue work activities. Hazardous material is considered to be asbestos, explosive devices, toxic waste, or material hazardous to health and safety. The Contractor shall secure the area from daily traffic until it is safe to resume normal activities.

1.18 SPARE PARTS

1.18.1 General

The requirements of this clause are in addition to any requirements for the provision of specific spare parts to be provided by the Contractor included in Technical Provisions. The Contractor shall furnish spare parts as directed by the Contracting Officer under the provisions of this clause for all equipment for which O&M data is to be provided under Clause OPERATION AND MAINTENANCE (O&M) DATA of this contract. The term "spare parts" as used herein shall include spare parts, special tools and test equipment.

1.18.2 Selection of Spare Parts to be Furnished

The Contractor shall provide master parts lists, recommended spare parts lists and lists of special tools and test equipment as a part of the equipment O&M data required by Clause OPERATION AND MAINTENANCE (O&M) DATA. The master parts list shall include the supplier's price for each part. After review of the lists, the Contracting Officer will select spare parts and furnish written direction to the Contractor indicating quantities and types of spare parts to be furnished by the Contractor. Written directions for spare parts orders may be provided on an incremental basis as reviews of O&M data submitted by the Contractor are completed but will not necessarily be issued in the sequence in which the Contractor submitted the equipment O&M data.

1.18.3 Procurement and Delivery of Spare Parts

The Contractor shall procure and be responsible for delivery, receipt, handling, placing in storage, inventory, and turnover to the Contracting Officer all spare parts selected by the Contracting Officer. In addition to the recommended spare parts list required in paragraph SELECTION OF SPARE PARTS TO BE FURNISHED above, the Contractor is responsible to have one (1) year supply of manufacturer's recommended spare parts on site ready to turn over to the Contracting Officer at the time of acceptance of the facility.

1.18.3.1 Shipment and Delivery

The Contractor shall be responsible for the shipment and delivery of spare parts to the location on or near the site

in Afghanistan as selected by the Contracting Officer. The Contractor shall provide all manpower and equipment required to receive and place into designated storage areas all spare parts purchased under this clause. The Contractor shall give the Contracting Officer thirty (30) calendar days notice of arrival at the site of the first shipment.

1.18.3.2 Turnover of Spare Parts

The Contractor shall notify the Contracting Officer seventy-two (72) hours prior to delivery of spare parts to the designated storage area. The Contractor and the Contracting Officer will perform a joint inventory of the spare parts and the spare parts will be turned over to the Contracting Officer. Spare parts purchased under this clause shall not be used by the Contractor.

1.18.3.3 Parts and Package Identification

Prior to shipment from point of purchase, each spare part shall be tagged or otherwise marked or labeled. Such labeling may be placed or affixed to the container, box or packaging in which spare parts are located when it is not feasible to place or affix such labeling directly on each spare part. Tags or labels shall include, but not necessarily be limited to; part number, description, parent equipment name and number location, project and/or other data as directed by the Contracting Officer.

1.18.3.4 Preservation and Packaging Instruction

a. Items ordered under this contract shall be preserved and packed for a minimum of three (3) years shelf life storage. All items shall be individually packaged except when the manufacturer specifies that the items are to be used in sets. Appropriate identification labels must be affixed to the items protective box or package. After the spare parts are packaged, the manufacturer shall weigh the spare parts and packaging and place the weight and size of the packaged container on the label with other information as outlined herein. Each item, not normally identified with manufacturer's name and part number, shall have an appropriate label affixed to it with manufacturer's name and part number.

b. Machined spare parts shall be lubricated or coated in order to withstand extensive periods of storage in a highly corrosive atmosphere.

c. Large items (greater than 50 lbs., or larger than one cubic foot) shall be packaged in waterproof wooden boxes and properly braced. Cushioning shall be used to prevent damage to the item and to the packaging material.

d. Solid state components, such as diodes, transistors, integrated circuits or equipment consisting of such parts that can be damaged as a result of static electricity and other stray electro-magnetic fields shall be packaged in heat-sealed, aluminum foil, laminated, flexible packages.

e. All other spare parts shall be packaged in heat sealed plastic bags or wrap. Delicate and more fragile items such as test equipment shall be cushioned or wrapped with transparent bubble wrap material prior to being inserted into the plastic package.

1.18.4 Warranty

All spare parts provided by the Contractor under this clause are subject to the general warranty clauses of this contract.

1.18.5 Payments for Spare Parts

Payments for spare parts ordered under the paragraph entitled "Selection of Spare Parts To Be Furnished" will be made under the work item of the Work Breakdown Sheet entitled "Spare Parts". Payments for spare parts specifically required elsewhere in this contract shall be considered as part of those equipment costs and shall be included in other payment items as appropriate. Payments for spare parts ordered under this clause shall be based

on the invoice price (FOB supplier) plus certified invoice price of surface shipment to the site in Afghanistan. The invoice price (FOB supplier) shall include the separately listed cost for preservation and packaging by the manufacturer as specified herein. The Contractor shall provide invoices and any additional backup, which may be required to demonstrate that the invoices presented represent the cost of spare parts, preservation and packaging, and cost of surface shipment to the site. Payment for handling, delivery, inventory, turnover, customs, overhead or profit shall not be paid or allowed under this Contract Provision, and shall be included in the cost for installation of this equipment under the other appropriate payment items of this contract. Price increases over prices furnished under paragraph SELECTION OF SPARE PARTS TO BE FURNISHED shall be fully substantiated. Payment for spare parts will be made after the spare parts have been accepted at the site by the Contracting Officer. If the total payments under the work item entitled "Spare Parts" does not reduce the balance of this work item to zero, the remaining balance will be deducted from the final contract amount. If orders exceed the work item entitled "Spare Parts", a modification for equitable adjustment will be issued in accordance with Contract Clause 52.243-4 entitled CHANGES. Payments for spare parts ordered under this clause shall constitute full payment for all cost of the spare parts and associated cost of preservation and packaging, and cost of surface shipment to the site. Other ancillary costs shall be included by the Contractor under the other appropriate work items of this contract and no additional cost except as provided herein will be allowed.

1.19 NOT USED

1.20 NOT USED

1.21 CONTRACTOR FURNISHED EQUIPMENT LISTS

The Contractor shall furnish a list of all items, other than integral construction type items, furnished under the contract. Items such as furniture, drapes, rugs, vehicles, office machines, appliances, etc., shall fall under this category. The Contractor's list shall describe the item; give the unit price and total quantities of each. Model and serial numbers for equipment shall be provided when applicable. The Contractor shall keep an up-to-date register of all covered items and make this information available to the Contracting Officer at all times. Prior to acceptance, the Contractor shall submit the complete register to the Contracting Officer.

1.22 TIME EXTENSIONS FOR UNUSUALLY SEVERE WEATHER

1.22.1 General

This provision specifies the procedure for determination of time extensions for unusually severe weather in accordance with the Contract Clause 52.249-10 entitled DEFAULT (FIXED-PRICE CONSTRUCTION) APR 1984. The listing below defines the anticipated monthly unusually severe weather for the contract period and is based on National Oceanic and Atmospheric Administration (NOAA) or similar data for the geographic location of the project. The schedule of anticipated unusually severe weather will constitute the baseline for determining monthly weather time evaluations. Upon award of this task order and continuing throughout the contract each month, actual unusually severe weather days will be recorded on a calendar day basis (including weekends and holidays) and compared to the monthly anticipated unusually severe weather in the schedule below. The term "actual unusually severe weather days" shall include days actually impacted by unusually severe weather. The Contractor's schedule must reflect the anticipated unusually severe weather days on all weather dependent activities.

MONTHLY ANTICIPATED UNUSUALLY SEVERE WEATHER CALENDAR DAYS

January	4 Days
February	2 Days
March	2 Days
April thru December	0 Days

1.22.2 Time Extensions

The number of actual unusually severe weather days shall be calculated chronologically from the first to the last day in each month. Unusually severe weather days must prevent work for fifty percent (50%) or more of the Contractor's workday and delay work critical to the timely completion of the project. If the number of actual unusually severe weather days exceeds the number of days anticipated in the paragraph above, the Contracting Officer will determine whether the Contractor is entitled to a time extension. The Contracting Officer will convert any qualifying delays to calendar days and issue a modification in accordance with the Contract Clause 52.249-10 entitled DEFAULT (FIXED-PRICE CONSTRUCTION) APR 1984.

1.23 STANDARDIZATION

Where two or more items of the same type or class of product, system or equipment furnished in this project are required, the units shall be products of the same manufacturer and shall be interchangeable when of the same size, capacity, performance characteristics, and rating. The only exception to this requirement is where the items are interchangeable due to conformance with industry standards (valves, fittings, etc.); they need not be by the same manufacturer. This requirement applies to all manufactured items in the project that normally require repair or replacement during the life of the equipment.

1.24 COMPLIANCE WITH HOST COUNTRY RULES AND CUSTOMS

The laws of Host Country may prohibit access to certain areas of the country that are under military control. The Contractor shall furnish the Contracting Officer the names of personnel, type, and amounts of equipment, dates and length of time required at the site, and the purpose of entering the host country. It is understood that areas to which rights of entry are provided by the Host Government are to be used only for work carried out under the contract and no destruction or damages shall be caused, except through normal usage, without concurrence of the Host Government.

1.24.1 Contractor's Responsibilities

The following items are the sole responsibility of the Contractor to investigate, estimate as to cost, and assume the risk, as normally encountered by Contractors. The Contractor shall be responsible for determining the effect of the following on his own cost of performance of the contract and for including sufficient amount in the contract price:

a. Official language and type of accounts required to satisfy the officials of the Local Government.

b. Entry and exit visas, residence permits, and residence laws applicable to aliens. This includes any special requirements of the Host Government, including those required by local Labor Offices, which the Contractor may have to fulfill before an application for a regular block of visas will be accepted.

c. Passports, health and immunization certificates, and quarantine clearance.

d. Compliance with local labor and insurance laws, including payment of employer's share of contribution, collecting balance from employee and paying into insurance funds.

e. Strikes, demonstrations and work stoppage.

f. Collection through withholding and payment to local Government, of any Host Country income tax on employees subject to tax.

g. Arranging to perform work in the Host Country, to import personnel, to employ non-indigenous labor, to receive payments and to remove such funds from the country.

h. Operating under local laws, practices, customs and controls, and with local unions, in connection with hiring and firing, mandatory wage scales, vacation pay, severance pay, overtime, holiday pay, 7th day of rest, legal

notice or pay in lieu thereof for dismissal of employees, slowdown and curtailed schedules during religious holidays and ratio of local labor employed in comparison to others.

i. Possibility of claims in local bureaus, litigation in local courts, or attachment of local bank accounts.

j. Compliance with workmen's compensation laws and contributions into funds. Provisions of necessary medical service for Contractor employees.

k. Special license required by the local Government for setting up and operating any manufacturing plant in the Host Country, e.g. concrete batching, precast concrete, concrete blocks, etc.

l. Sales within the host country of Contractor-owned materials, and equipment.

m. Special licenses for physicians, mechanics, tradesmen, drivers, etc.

n. Identification and/or registration with local police of imported personnel.

o. Stamp tax on documents, payments and payrolls.

p. Base passes for permanent staff, day laborers, motor vehicles, etc.

q. Compliance with all customs and import rules, regulations and restrictions, including, but not limited to, local purchase requirements.

1.25 IDENTIFICATION OF EMPLOYEE'S PERSONNEL AND VEHICULAR ACCESS TO THE PROJECT SITES

1.25.1 Employee Identification

The Contractor shall be responsible for furnishing to each employee and for requiring each employee engaged on the work, to display identification as approved and directed by the Contracting Officer. Prescribed identification shall immediately be delivered to the Contracting Officer for cancellation upon release of any employee. When required, the Contractor shall obtain and provide fingerprints of persons employed on the project. Contractor and subcontractor personnel shall wear identifying markings on hard hats clearly identifying the company for whom the employee works.

1.25.3 Security Plan

The Contractor shall submit to the Contracting Officer, within ten (10) calendar days after award of this task order, his proposed personnel and vehicular access plan. The plan shall address in detail the contractors proposed procedures, and organization necessary to produce and maintain effective security within the contract limits twenty-four (24) hours a day seven (7) days a week.

1.26 RADIO TRANSMITTER RESTRICTIONS

To preclude accidental actuation of sensitive electronic equipment, the Contractor shall not use radio-transmitting equipment without prior approval of the Contracting Officer.

1.27 NOT USED

1.28 PUBLIC RELEASE OF INFORMATION

1.28.1 Prohibition

There shall be no public release of information or photographs concerning any aspect of the materials or services

relating to this bid, contract, purchase order, or other documents resulting there from without the prior written approval of the Contracting Officer.

1.28.2 Subcontract and Purchase Orders

The Contractor agrees to insert the substance of this clause in all purchase orders and subcontract agreements issued under this contract.

1.29 ATTACHMENTS

TAC FORM 61 - Accident Prevention Program Hazard Analysis

TAC FORM 356 - Operation and Maintenance Training Validation Certificate

-- End of Section --

SECTION 01312A QUALITY CONTROL SYSTEM (QCS)

1.1 GENERAL

The Government will use the Resident Management System for Windows (RMS) to assist in its monitoring and administration of this contract. The Contractor shall use the Government-furnished Construction Contractor Module of RMS, referred to as QCS, to record, maintain, and submit various information throughout the contract period. The Contractor module, user manuals, updates, and training information can be downloaded from the RMS web site. This joint Government-Contractor use of RMS and QCS will facilitate electronic exchange of information and overall management of the contract. QCS provides the means for the Contractor to input, track, and electronically share information with the Government in the following areas:

Administration
Finances
Quality Control
Submittal Monitoring
Scheduling
Import/Export of Data

1.1.1 Correspondence and Electronic Communications

For ease and speed of communications, both Government and Contractor will, to the maximum extent feasible, exchange correspondence and other documents in electronic format. Correspondence, pay requests and other documents comprising the official contract record shall also be provided in paper format, with signatures and dates where necessary. Paper documents will govern, in the event of discrepancy with the electronic version.

1.1.2 Other Factors

Particular attention is directed to Contract Clause, "Schedules for Construction Contracts", Contract Clause,

"Payments", Section 01321, PROJECT SCHEDULE, Section 01335, SUBMITTAL PROCEDURES, and Section 01451, CONTRACTOR QUALITY CONTROL, which have a direct relationship to the reporting to be accomplished through QCS. Also, there is no separate payment for establishing and maintaining the QCS database; all costs associated therewith shall be included in the contract pricing for the work.

1.2 QCS SOFTWARE

QCS is a Windows-based program that can be run on a stand-alone personal computer or on a network. The Government will make available the QCS software to the Contractor after award of the construction contract. Prior to the Pre-Construction Conference, the Contractor shall be responsible to download, install and use the latest version of the QCS software from the Government's RMS Internet Website. Upon specific justification and request by the Contractor, the Government can provide QCS on 3-1/2 inch high-density diskettes or CD-ROM. Any program updates of QCS will be made available to the Contractor via the Government RMS Website as they become available.

1.3 SYSTEM REQUIREMENTS

The following is the minimum system configuration that the Contractor shall have to run QCS:

QCS and QAS System

Hardware

IBM-compatible PC with 1000 MHz Pentium or higher processor

256+ MB RAM for workstation / 512+ MB RAM for server

1 GB hard drive disk space for sole use by the QCS system

3 1/2 inch high-density floppy drive

Compact Disk (CD) Reader 8x speed or higher

SVGA or higher resolution monitor (1024x768, 256 colors)

Mouse or other pointing device

Windows compatible printer. (Laser printer must have 4 MB+ of RAM)

Connection to the Internet, minimum 56k BPS

Software

MS Windows 2000 or higher

QAS-Word Processing software: MS Word 2000 or newer

Latest version of: Netscape Navigator, Microsoft Internet Explorer, or other browser that supports HTML 4.0 or higher

Electronic mail (E-mail) MAPI compatible

Virus protection software that is regularly upgraded with all issued manufacturer's updates

1.4 RELATED INFORMATION

1.4.1 QCS User Guide

After contract award, the Contractor shall download instructions for the installation and use of QCS from the Government RMS Internet Website; the Contractor can obtain the current address from the Government. In case of justifiable difficulties, the Government will provide the Contractor with a CD-ROM containing these instructions.

1.4.2 Contractor Quality Control (CQC) Training

The use of QCS will be discussed with the Contractor's QC System Manager during the mandatory CQC Training class.

1.5 CONTRACT DATABASE

Prior to the pre-construction conference, the Government shall provide the Contractor with basic contract award data to use for QCS. The Government will provide data updates to the Contractor as needed, generally by files attached to E-mail. These updates will generally consist of submittal reviews, correspondence status, QA comments, and other administrative and QA data.

1.6 DATABASE MAINTENANCE

The Contractor shall establish, maintain, and update data for the contract in the QCS database throughout the duration of the contract. The Contractor shall establish and maintain the QCS database at the Contractor's site office. Data updates to the Government shall be submitted by E-mail with file attachments, e.g., daily reports, schedule updates, payment requests. If permitted by the Contracting Officer, a data diskette or CD-ROM may be used instead of E-mail (see Paragraph DATASUBMISSION VIA COMPUTER DISKETTE OR CD-ROM). The QCS database typically shall include current data on the following items:

1.6.1 Administration

1.6.1.1 Contractor Information

The database shall contain the Contractor's name, address, telephone numbers, management staff, and other required items. Within 14 calendar days of receipt of QCS software from the Government, the Contractor shall deliver Contractor administrative data in electronic format via E-mail.

1.6.1.2 Sub-Contractor Information

The database shall contain the name, trade, address, phone numbers, and other required information for all sub-Contractors. A sub-Contractor must be listed separately for each trade to be performed. Each sub-Contractor/trade shall be assigned a unique Responsibility Code, provided in QCS. Within 14 calendar days of receipt of QCS software from the Government, the Contractor shall deliver sub-Contractor administrative data in electronic format via E-mail.

1.6.1.3 Correspondence

All Contractor correspondence to the Government shall be identified with a serial number. Correspondence initiated by the Contractor's site office shall be prefixed with "S". Letters initiated by the Contractor's home (main) office shall be prefixed with "H". Letters shall be numbered starting from 0001 (e.g., H-0001 or S-0001). The Government's letters to the Contractor will be prefixed with "C".

1.6.1.4 Equipment

The Contractor's QCS database shall contain a current list of equipment planned for use or being used on the jobsite, including the most recent and planned equipment inspection dates.

1.6.1.5 Management Reporting

QCS includes a number of reports that Contractor management can use to track the status of the project. The value of these reports is reflective of the quality of the data input, and is maintained in the various sections of QCS. Among these reports are: Progress Payment Request worksheet, QA/QC comments, Submittal Register Status, Three-Phase Inspection checklists.

1.6.2 Finances

1.6.2.1 Pay Activity Data

The QCS database shall include a list of pay activities that the Contractor shall develop in conjunction with the construction schedule. The sum of all pay activities shall be equal to the total contract amount, including modifications. Pay activities shall be grouped by Contract Line Item Number (CLIN), and the sum of the activities shall equal the amount of each CLIN. The total of all CLINs equals the Contract Amount.

1.6.2.2 Payment Requests

All progress payment requests shall be prepared using QCS. The Contractor shall complete the payment request worksheet and include it with the payment request. The work completed under the contract, measured as percent or as specific quantities, shall be updated at least monthly. After the update, the Contractor shall generate a payment request report using QCS. The Contractor shall submit the payment requests with supporting data by E-mail with file attachment(s). If permitted by the Contracting Officer, a data diskette may be used instead of E-mail. A signed paper copy of the approved payment request is also required, which shall govern in the event of discrepancy with the electronic version.

1.6.3 Quality Control (QC)

QCS provides a means to track implementation of the 3-phase QC Control System, prepare daily reports, identify and track deficiencies, document progress of work, and support other Contractor QC requirements. The Contractor shall maintain this data on a daily basis. Entered data will automatically output to the QCS generated daily report. The Contractor shall provide the Government a Contractor Quality Control (CQC) Plan within the time required in Section 01451, Contractor QUALITY CONTROL. Within seven calendar days of Government acceptance, the Contractor shall submit a data diskette or CD-ROM reflecting the information contained in the accepted CQC Plan: schedule, pay activities, features of work, submittal register, QC requirements, and equipment list.

1.6.3.1 Daily Contractor Quality Control (CQC) Reports.

QCS includes the means to produce the Daily CQC Report. The Contractor may use other formats to record basic QC data. However, the Daily CQC Report generated by QCS shall be the Contractor's official report. Data from any supplemental reports by the Contractor shall be summarized and consolidated onto the QCS-generated Daily CQC Report. Daily CQC Reports shall be submitted as required by Section 01451A, Contractor QUALITY CONTROL. Reports shall be submitted electronically to the Government using E-mail or diskette within 24 hours after the date covered by the report. Use of either mode of submittal shall be coordinated with the Government representative. The Contractor shall also provide the Government a signed, printed copy of the daily CQC report.

1.6.3.2 Deficiency Tracking.

The Contractor shall use QCS to track deficiencies. Deficiencies identified by the Contractor will be numerically tracked using QC punch list items. The Contractor shall maintain a current log of its QC punch list items in the

QCS database. The Government will log the deficiencies it has identified using its QA punch list items. The Government's QA punch list items will be included in its export file to the Contractor. The Contractor shall regularly update the correction status of both QC and QA punch list items.

1.6.3.3 Three-Phase Control Meetings

The Contractor shall maintain scheduled and actual dates and times of preparatory and initial control meetings in QCS.

1.6.3.4 Accident/Safety Tracking.

The Government will issue safety comments, directions, or guidance whenever safety deficiencies are observed. The Government's safety comments will be included in its export file to the Contractor. The Contractor shall regularly update the correction status of the safety comments. In addition, the Contractor shall utilize QCS to advise the Government of any accidents occurring on the jobsite. This brief supplemental entry is not to be considered as a substitute for completion of mandatory reports, e.g., ENG Form 3394 and OSHA Form 300.

1.6.3.5 Features of Work

The Contractor shall include a complete list of the features of work in the QCS database. A feature of work may be associated with multiple pay activities. However, each pay activity (see subparagraph "Pay Activity Data" of paragraph "Finances") will only be linked to a single feature of work.

1.6.3.6 QC Requirements

The Contractor shall develop and maintain a complete list of QC testing, transferred and installed property, and user training requirements in QCS. The Contractor shall update all data on these QC requirements as work progresses, and shall promptly provide this information to the Government via QCS.

1.6.4 Submittal Management

The Government will provide the initial submittal register in electronic format. Thereafter, the Contractor shall maintain a complete list of all submittals, including completion of all data columns. Dates on which submittals are received and returned by the Government will be included in its export file to the Contractor. The Contractor shall use QCS to track and transmit all submittals. ENG Form 4025, submittal transmittal form, and the submittal register update shall be produced using QCS. RMS will be used to update, store and exchange submittal registers and transmittals, but will not be used for storage of actual submittals.

1.6.5 Schedule

The Contractor shall develop a construction schedule consisting of pay activities, in accordance with Contract Clause "Schedules for Construction Contracts", or Section 01321, PROJECT SCHEDULE, as applicable. This schedule shall be input and maintained in the QCS database. The updated schedule data shall be included with each pay request submitted by the Contractor.

1.6.6 Import/Export of Data

QCS includes the ability to export Contractor data to the Government and to import submittal register and other Government-provided data, and schedule data using SDEF.

1.7 IMPLEMENTATION

Contractor use of QCS as described in the preceding paragraphs is mandatory. The Contractor shall ensure that

sufficient resources are available to maintain its QCS database, and to provide the Government with regular database updates. QCS shall be an integral part of the Contractor's management of quality control.

1.8 DATA SUBMISSION VIA COMPUTER DISKETTE OR CD-ROM

The Government-preferred method for Contractor's submission of updates, payment requests, correspondence and other data is by E-mail with file attachment(s). For locations where this is not feasible, the Contracting Officer may permit use of computer diskettes or CD-ROM for data transfer. Data on the disks or CDs shall be exported using the QCS built-in export function. If used, diskettes and CD-ROMs will be submitted in accordance with the following:

1.8.1 File Medium

The Contractor shall submit required data on 3-1/2 inch double-sided high-density diskettes formatted to hold 1.44 MB of data, capable of running under Microsoft Windows 95 or newer. Alternatively, CD-ROMs may be used. They shall conform to industry standards used in the United States. All data shall be provided in English.

1.8.2 Disk or CD-ROM Labels

The Contractor shall affix a permanent exterior label to each diskette and CD-ROM submitted. The label shall indicate in English, the QCS file name, full contract number, contract name, project location, data date, name, and telephone number of person responsible for the data.

1.8.3 File Names

The Government will provide the file names to be used by the Contractor with the QCS software.

1.9 MONTHLY COORDINATION MEETING

The Contractor shall update the QCS database each workday. At least monthly, the Contractor shall generate and submit an export file to the Government with schedule update and progress payment request. As required in Contract Clause "Payments", at least one week prior to submittal, the Contractor shall meet with the Government representative to review the planned progress payment data submission for errors and omissions. The Contractor shall make all required corrections prior to Government acceptance of the export file and progress payment request. Payment requests accompanied by incomplete or incorrect data submittals will be returned. The Government will not process progress payments until an acceptable QCS export file is received.

1.10 NOTIFICATION OF NONCOMPLIANCE

The Contracting Officer will notify the Contractor of any detected noncompliance with the requirements of this specification. The Contractor shall take immediate corrective action after receipt of such notice. Such notice, when delivered to the Contractor at the work site, shall be deemed sufficient for the purpose of notification.

-- End of Section -

SECTION 01321 PROJECT SCHEDULE

PART 1 GENERAL

1.1 SUBMITTALS

The following shall be submitted for Government approval in accordance with Section 01335 SUBMITTAL PROCEDURES: SD-07 Schedules Project Schedule. Horizontal Bar Chart and Periodic Payment Request Updates. Projected Earnings Curve and Periodic Payment Request Updates. Revisions to the Project Schedule and Projected Earnings Curve for Modifications Issued to this Contract shall be coordinated with the Contracting Officer.

PART 2 PRODUCTS (Not Applicable)

PART 3 EXECUTION

3.1 GENERAL

The Contractor shall furnish a Project Schedule as described below. The scheduling of construction shall be the responsibility of the Contractor. Contractor management personnel shall actively participate in its development. Subcontractors and suppliers working on the project should also contribute in developing and maintaining an accurate Project Schedule. The approved Project Schedule shall be used to measure the progress of the work, to aid in evaluating time extensions, and to provide the basis of all progress payments.

3.2 BASIS FOR PAYMENT

The schedule shall be the basis for measuring Contractor progress. Lack of an approved schedule or scheduling personnel shall result in an inability of the Contracting Officer to evaluate Contractor progress for the purposes of payment. Failure of the Contractor to provide all information, as specified below, shall result in the disapproval of the entire Project Schedule submission and the inability of the Contracting Officer to evaluate Contractor progress for payment purposes. In the case where Project Schedule revisions have been directed by the Contracting Officer and those revisions have not been included in the Project Schedule, then the Contracting Officer may hold retainage up to the maximum allowed by contract, each payment period, until revisions to the Project Schedule have been made.

3.3 PROJECT SCHEDULE

3.3.1 Schedule of Construction

Within seven (7) calendar days after award of the contract, the Contractor shall prepare and submit a Construction Schedule to the Contracting Officer for approval. This schedule shall address each payment line item and/or sub-line item listed in the Proposal Schedule separately.

3.3.2 Non-Compliance

Failure of the Contractor to comply with the requirements of the Contracting Officer shall be grounds for determination by the Contracting Officer that the Contractor is not prosecuting the work with sufficient diligence to ensure completion within the time specified in the contract. Upon making this determination, the Contracting Officer may terminate the Contractor's right to proceed with the work, or any separable part of it, in accordance with the default terms of this contract.

3.3.3 Horizontal Bar Chart

The required schedule shall utilize an automated scheduling program and shall be in the form of a horizontal bar chart. The line or sub-line item schedule of activities shall be listed down the left side of the page. A time scale shall run across the bottom of the page. Each work item shall be represented by a bar starting with the schedule start date and running continuously to the completion date.

3.3.4 Cost

Listed with each work item shall be a corresponding cost representing the total cost, such as material, labor, equipment, and overhead associated with that item. The total cost of the work items shall be equal to the Bid Price for that sub-line item of the Proposal Schedule.

3.3.5 Scheduled Project Completion

The schedule interval shall extend from Notice-To-Proceed to the contract completion date.

3.3.6 Projected Earning Curve

Submitted with the Construction Schedule shall be a Projected Earning Curve. The Projected Earning Curve is a plot of the Contractor's earnings on the vertical axis and the contract duration on the horizontal axis. The earnings figure shall relate to the complete value of the contract and need not reflect each facility separately.

3.3.7 Construction Schedule

The Construction Schedule shall be on one page with a maximum dimension of 90 cm by 120 cm. The Contractor shall submit the Projected Earnings Curve on the same page. The initial submittal shall include one (1) reproducible and four (4) copies, one (1) copy of which will be returned to the Contractor when approved.

3.3.8 Submission With Partial Payment Estimate

Each time the Contractor submits a payment request under this contract he shall also submit three (3) copies of the Bar Chart. The Bar Chart shall be annotated by indicating the percent complete for each activity directly on the bar. The Projected Earnings Curve shall be annotated by plotting actual earnings versus time on the same graph. Those work items reflecting performance which is behind schedule by fifteen (15) calendar days or more shall be fully explained in detail giving the reason for delay and the Contractor's plan for timely completion within the schedule.

3.3.9 Modifications

The Construction Schedule and Projected Earning Curve shall be revised to reflect any and all modifications issued to this contract as they are issued. Format and numbers of copies as defined in paragraph CONSTRUCTION SCHEDULE shall be submitted for approval by the Contracting Officer.

3.4 PERIODIC PROGRESS MEETINGS

Progress meetings to discuss payment shall include a monthly on-site meeting or shall be conducted at other regular intervals mutually agreed to at the preconstruction conference. During this meeting the Contractor shall describe, on an activity-by-activity basis, all proposed revisions and adjustments to the project schedule required to reflect the current status of the project. The Contracting Officer will approve activity progress, proposed revisions, and adjustments as appropriate.

3.4.1 Update Submission Following Progress Meeting

A complete update of the project schedule containing all approved progress, revisions, and adjustments, based on the regular progress meeting, shall be submitted not later than four (4) working days after the monthly progress meeting.

3.4.2 Progress Meeting Contents

Update information, including Actual Start Dates, Actual Finish Dates, Remaining Durations, and Cost to Date, shall be subject to the approval of the Contracting Officer.

3.4.3 Earnings Report

A compilation of the Contractor's Total Earnings on the project from the Notice-to-Proceed until the most recent Monthly Progress Meeting. This report shall reflect the Earnings of specific activities based on the agreements made in the field and approved between the Contractor and the Contracting Officer at the most recent Monthly Progress Meeting. Provided that the Contractor has provided a complete schedule update, this report shall serve as the basis of determining Contractor Payment. This report shall: sum all activities and provide a percent complete by individual activity and total project percent complete. The report shall contain, for each activity: activity identification, activity description, original budgeted amount, total quantity, quantity to date, percent complete (based on cost), and earnings to date.

3.4.4 Cost Completion

The earnings for each activity started shall be reviewed. Payment shall be based on earnings for each in-progress or completed activity. Payment for individual activities shall not be made for work that contains quality defects. A portion of the overall project amount may be retained based on delays of activities.

3.4.5 Network Analysis System

The Contractor may, as an option, submit to the Contracting Officer for approval, a time related network analysis in lieu of the previously specified bar chart.

-- End of Section --

SECTION 01335 SUBMITTAL PROCEDURES FOR DESIGN-BUILD PROJECTS

PART 1 GENERAL

1.1 REFERENCE

The publication listed below forms a part of this specification to the extent referenced. The publication is referenced to in the text by basic designation only.

CONSTRUCTION SPECIFICATIONS INSTITUTE

Manual of Practice
Construction Specifications Institute
http://www.csinet.org/s_csi/index.asp
601 Madison Street
Alexandria, Virginia
22314-1791

NATIONAL INSTITUTE OF BUILDING SCIENCES (NIBS)

Unified Master Reference List (UMRL)

National Institute of Building Sciences
1090 Vermont Avenue, NW, Suite 700
Washington, DC 20005-4905
Email: nibs@nibs.org
FAX: (202) 289-1092
Tele: (202) 289-7800

AFGHANISTAN ENGINEER DISTRICT

AFGHANISTAN ENGINEER DISTRICT
http://www.aed.usace.army.mil
U.S. Army Corps of Engineers
Attn.: Qalaa House
APO AE 09356

TRANSATLANTIC PROGRAMS CENTER

Design Instructions Manual

U.S. Army Corps of Engineers
http://www.tac.usace.army.mil/extranet/
Transatlantic Programs Center
201 Prince Frederick Drive
Winchester, Virginia 22602

1.2 SUBMITTAL CLASSIFICATION

Submittals are classified as follows.

1.2.1 DESIGN SUBMITTALS

Contractor Furnished design submittals are the various design documents which primarily consist of field investigations, calculations, design analysis, drawings and specifications. The Design-Build Contractor shall not begin construction work until the Government has reviewed the Design-Build Contractor's concept, intermediate and final designs and has cleared them for construction. Clearance for construction shall not be construed as meaning Government approval. Unless otherwise indicated, the risk for the design is the sole responsibility of the Design-Build Contractor.

As a minimum, design submittals shall be submitted at the following intervals:

General design - 65%

Final design review - 99%

Cleared For Construction review - 100%

Minimum submission requirements for each phase noted above are further defined in Paragraph 3.9 DESIGN STAGES.

Additional requirements for As-Built drawing requirements are further defined in Section 01780A CLOSEOUT SUBMITTALS, Paragraph 1.2.1.

For design reviews the standard Corps of Engineers method of review is through DrChecks through Projnet
https://www.projnet.org/projnet/binKornHome/index.cfm
All of AED Design Submittal reviews shall be done through DrChecks$_{SM}$.

The Afghanistan Engineer District will complete a review at each of the above design stages and document all comments in DrChecks$_{SM}$. Each of the DrChecks$_{SM}$ comments shall be reviewed by the appropriate Design-Build Contractor discipline to ensure that the comment has been adequately addressed. A Design-Build Contractor response to any DrChecks$_{SM}$ comment of "will comply" is not sufficient. Responses shall describe how the comment was addressed, the applicable drawings sheet which the comment was incorporated and any additional comments and references to the adequacy for the rebuttal.

1.2.2 CONSTRUCTION SUBMITTALS

1.2.2.1 Contractor Furnished Government Approved Construction Submittals (GA)

Government approved construction submittals are primarily related to plans (Contractor Quality Control, Accident Prevention, Resident Management System, Area Use, etc.) schedules (Project Schedule/Network Analysis), and certificates of compliance. They may also include proposed variations to approved design documents in accordance with the paragraph entitled "VARIATIONS".

In addition, GA construction submittals are required for the following:

MECHANICAL FEATURES

EQUIPMENT SUBMITTALS: Manufacturer's standard catalog data, installation, Operation and Maintenance (O&M) manuals for water tanks, control valves, pipe insulation, water pumps, air handling units, condensers, variable air volume (VAV) boxes.

TESTING RESULTS: For water tanks, water pumps (including instrumentation), water piping, sprinkler systems, and oxygen systems, submit six (6) copies of each test containing the following information in bound letter-size booklets:

1) The date the tests were performed. 2) A list of equipment used, with calibration certifications. 3) A copy of measurements taken. 4) The parameters to be verified. 5) The condition specified for the parameter. 6) The inspection results, signed, dated, and certified by the installer. The certification shall state that required procedures were accomplished, that the procedures were conducted in compliance the plans and specifications. 7) A description of adjustments performed.

Individual reports shall be provided for storage tank tests, piping tests, system performance tests, high level alarm test, and the system leak tests. Drawings shall be folded blue lines, with the title block visible.

ELECTRICAL FEATURES

PRODUCT DATA and SHOP DRAWINGS: generators (and its auxiliaries), load bank, transformers, substations, panels/switchboards/motor control centers, lightning protection, receptacles, circuit breakers.

DESIGN DATA: lightning protection and grounding.

TEST DATA: Lightning protection and grounding.

ARCHITECTURAL FEATURES

PRODUCT DATA/CATALOGUE CUTS/SHOP DRAWINGS/SCHEDULES: Specialty doors and frames (fire rated, sound rated, bullet resistant, security, overhead rolling); door hardware; windows; metal roofing (including fasteners, flashing, and accessories); building insulation; fire-rated and water-resistant gypsum board; and other specialty products (bullet resistant glazing/panels).

COLOR BOARD: Architectural finishes

PRODUCT DATA/CATALOGUE CUTS/INSTALLATION INSTRUCTIONS: Exterior Insulation and Finish System (EIFS)

SHOP DRAWINGS: Casework/Cabinetry

1.2.2.2 For Information Only Construction Submittals (FIO)

All submittals not requiring Designer of Record or Government approval will be for information only. These construction submittals shall be checked, stamped, signed and dated by the Design-Build Contractor's Quality Control Engineer, certifying that such submittal complies with the contract requirements. All Design-Build Contractor submittals shall be subject to review by the Government at any time during the course of the contract. Any Contractor submittal found to contain errors or omissions shall be resubmitted as one requiring "approval". No adjustment for time or money will be allowed for corrections required as a result of noncompliance with plans or specifications. Normally submittals For Information Only will not be returned. Approval of the Contracting Officer is not required on FIO submittals. These submittals will be used for information purposes. The Government reserves the right to require the Design-Build Contractor to resubmit any item found not to comply with the contract. This does not relieve the Design-Build Contractor from the obligation to furnish material conforming to the plans and specifications and will not prevent the Contracting Officer from requiring removal and replacement if nonconforming material is incorporated in the work.

1.3 SUBMITTAL CERTIFICATION

The CQC organization shall be responsible for certifying that all submittals and deliverables have been reviewed in detail for completeness, are correct, and are in strict conformance with the contract drawings, specifications, and reference documents.

1.3.1 Effective Quality Control System

The Design-Build Contractor is responsible for quality control and shall establish and maintain an effective quality control system in compliance with Contract Clause 52.236-21 SPECIFICATIONS AND DRAWINGS FOR CONSTRUCTION - ALTERNATE I, and SECTION 01451 CONTRACTOR QUALITY CONTROL.

1.3.1.1 Organizational Responsibility

The quality control system shall cover all design, construction, subcontractor, manufacturer, vendor, and supplier operations at any tier, both onsite and offsite.

1.3.1.2 CQC System Manager Review and Approval

Prior to submittal, all items shall be checked and approved by the Design-Build Contractor's Quality Control (CQC) System Manager. If found to be in strict conformance with the contract requirement, each item shall be stamped, signed, and dated by the CQC System Manager. Copies of the CQC organizations review comments indicating action taken shall be included within each submittal.

1.3.1.3 Determination of Compliance

Each submittal shall be complete and in sufficient detail to allow ready determination of compliance with contract requirements by the Contracting Officer. The contractor shall submit all required documentation with submittals. The U.S. Army Corps of Engineer (USACE) will not accept partial submittals.

1.3.2 Responsibility for Errors or Omissions

It is the sole responsibility of the Design-Build Contractor to ensure that submittals do or do not comply with the contract documents. Government review, clearance for construction, or approval by the Contracting Officer shall not relieve the Design-Build Contractor from responsibility for any errors or omissions in such drawings, nor from responsibility for complying with the requirements of this contract.

1.3.2.1 Government Review

Government review, clearance for construction, or approval of post design construction submittals shall not be construed as a complete check, but will indicate only that the general method of construction, materials, detailing and other information are satisfactory.

1.3.3 Substitutions

After design submittals have been reviewed and cleared for construction by the Contracting Officer, no resubmittal for the purpose of substituting materials or equipment will be considered unless justified as indicated in the paragraph entitled VARIATIONS.

1.3.4 Additional Submittals

In conjunction with Contract Clause 52.236-5 MATERIAL AND WORKMANSHIP. The Contracting Officer may request submittals in addition to those specified when deemed necessary to adequately describe the work.

1.3.5 Untimely and Unacceptable Submittals

If the Design-Build Contractor fails to submit submittals in a timely fashion, or repetitively submits submittals that are incomplete or not in strict conformance with the contract documents, no part of the time lost due to such actions shall be made the subject of claim for extension of time or for excess costs or damages by the Design-Build Contractor.

1.3.6 Stamps

Stamps shall be used by the Design-Build Contractor on all design and post design construction submittals to certify that the submittal meets contract requirements and shall be similar to the following:

Design-Build Contractor (Firm Name)
Contract Number
Contract Name

I certify that this submittal accurate, is in strict conformance with all contract requirements, has been thoroughly coordinated and cross checked against all other applicable disciplines to prevent the omission of vital information, that all conflicts have been resolved, and that repetition has been avoided and, it is complete and in sufficient detail to allow ready determination of compliance with contract requirements by the Contracting Officer.

Name of CQC System Manager: _____

Signature of CQC System Manager: _____

Date: _____

1.4 ENGLISH LANGUAGE

All specifications, drawings, design analysis, design calculations, shop drawings, catalog data, materials lists, and equipment schedules submitted shall be in the English language. However, the local language of host country shall be added to project As-Built drawings.

1.5 UNITS OF MEASUREMENT

Design documents shall be prepared in accordance with the guidance offered in SECTION 01415 METRIC MEASUREMENTS.

The metric units used are the International System of Units (SI) developed and maintained by the General Conference on Weights and Measures (CGPM); the name International System of Units and the international abbreviation SI were adopted by the 11th CGPM in 1960.

1.5.1 Drawings

1.5.1.1 Site Layout

All site layout data shall be dimensioned in meters or coordinates, as appropriate. All details and pipe sizes shall be dimensioned in millimeters.

EXAMPLE: Masonry openings shall be a U.S. module to suit a standard U.S. door. The dimensions of the opening shall be given in SI units. Metric dimensions for site plans shall be in meters and fraction thereof. Dimensions for all other drawings shall be in millimeters using hard metric designations (example: 12 meters = 12 000). Hard metric is defined as utilizing standard metric products and the use of measurements in increments of fifty (50) and one hundred (100) millimeters.

1.5.1.2 Georeference

All site plans shall be geo-referenced using the WGS 1984 coordinate system, specifically the following: WGS 1984 UTM one 42 N. If the designer is not able to use the stated coordinate system the coordinate system used shall be correlated to the stated coordinate system. A table shall be provided within the site drawing set cross referencing the WGS84 system to that utilized. This is required to allow AED to incorporate the plans into GIS for storage, map production, and possible geospatial analysis of the different work sites.

1.5.2 Design Calculations

Calculations shall be in SI units to meet the requirements of the design. Quantities on the contract drawings stated in SI units, shall also be stated in SI units in the design analysis to match the drawings.

1.5.3 Specifications

All equipment and products shall be specified according to U.S. standards and described by appropriate units as required herein.

1.6 WITHHOLDING OF PAYMENT FOR SUBMITTALS

1.6.1 Design Submittals

Payment for Design work will not be made in whole or in part until the Government has reviewed and cleared the design for construction.

1.6.2 Construction Submittals

Payment for materials incorporated in the work will not be made if required approvals have not been obtained. In event under separate clause of the contract, the Design-Build Contractor is allowed partial or total invoice payment for materials shipped from the Continental United States (CONUS), and/or stored at the site, the Design-Build Contractor shall with his request for such payment, submit copies of approvals (ENG Form 4025)

certifying that the materials that are being shipped and/or stored have been approved and are in full compliance with the contract technical specifications.

PART 2 PRODUCTS

2.1 GENERAL

The following are contract deliverables which expound upon and finalize the design parameters/requirements outlined within the contract documents. They shall be prepared in such a fashion that the Prime Contractor is responsible to the Government and not as an internal document between the Prime Contractor and its Subcontractors, Vendors, Suppliers, etc.

2.2 PROJECT NARRATIVE

The Project Narrative shall be a bound set and shall contain the contract Request For Proposal (RFP) Sections 01010 and 01015 (and any additional RFP sections that are appropriate). The RFP Section 01010 and 01015 shall be the latest version. Any subsequent changes to the RFP shall be clearly marked and highlighted with explanation for the changes.
The Project Narrative shall also contain the general description of the project and a discussion of the design approach and design features for the project.

2.3 DESIGN ANALYSIS

2.3.1 Submittal

A design analysis, written in the English Language with SI units of measure shall be submitted for review by the Government. The design analysis is a written explanation of the project design which is expanded and revised (updated) as the design progresses. The design analysis shall contain all explanatory material giving the design rationale for any design decisions which would not be obvious to an engineer reviewing the final drawings and specifications. The design analysis contains the criteria for and the history of the project design, including criteria furnished by the Government, letters, codes, references, conference minutes, and pertinent research. Design calculations, computerized and manual, are included in the design analysis. Narrative descriptions of design solutions are also included. Written material may be illustrated by diagrams and sketches to convey design concepts. Catalog cuts and manufacturer's data for all equipment items, shall be submitted. Copies of all previous design phase review comments and the actions assigned to them shall be included with each submission of the design analysis. Specific requirements for the design analysis, listed by submittal phase, are contained hereinafter.

2.3.2 Format

Format of design analysis shall closely match the standard format referenced within the RFP.

2.4 DESIGN CALCULATIONS

When they are voluminous, they shall be bound separately from the narrative part of the design analysis. The design calculations shall be presented in a clean and legible form incorporating a title page and index for each volume. A table of contents, which shall be an index of the indices, shall be furnished when there is more than one volume. The source of loading conditions, supplementary sketches, graphs, formulae, and references shall be identified. Assumptions and conclusions shall be explained. Calculation sheets shall carry the names or initials of the computer and the checker and the dates of calculations and checking. No portion of the calculations shall be computed and checked by the same person.

2.4.1 Automatic Data Processing Systems (ADPS)

When ADPS are used to perform design calculations, the design analysis shall include descriptions of the computer programs used and copies of the ADPS input data and output summaries. When the computer output is large, it may be divided into volumes at logical division points.

2.4.1.1 Computer Printouts

Each set of computer printouts shall be preceded by an index and by a description of the computation performed. If several sets of computations are submitted, they shall be accompanied by a general table of contents in addition to the individual indices.

2.4.1.2 Preparation of the Description

Preparation of the description which must accompany each set of ADPS printouts shall include the following.

a. Explain the design method, including assumptions, theories and formulae.

b. Include applicable diagrams, adequately identified.

c. State exactly the computation performed by the computer.

d. Provide all necessary explanations of the computer printout format, symbols, and abbreviations.

e. Use adequate and consistent notation.

f. Provide sufficient information to permit manual checks of the results.

2.5 SPECIFICATIONS

Specifications shall be prepared in accordance with the Construction Specifications Institute (CSI) format. The Design-Build Contractor prepared specifications shall include as a minimum, all applicable specification sections referenced by the CSI. Where the CSI does not reference a specification section for specific work to be performed by this contract, the Design-Build Contractor shall be responsible for creating the required specification.

2.5.1 Preparation of Proprietary Non-Generic Design Documents

During the course of design, the designer shall specify specific proprietary materials, equipment, systems, and patented processes by trade name, make, or catalog number. The subsequent use of construction submittals to supplant and/or supplement incomplete design effort is unacceptable. Design submittals containing non-proprietary and/or generic design criteria where proprietary items are available, will be returned for resubmission.

2.5.2 Use of Unified Facilities Guide Specifications (UFGS)

If UFGS are used, it is the sole responsibility of the Design-Build Contractor to prepare these specifications in strict conformance with the paragraph entitled PREPARATION OF PROPRIETARY NON-GENERIC DESIGN DOCUMENTS. UFGS containing non-proprietary and/or generic design criteria, where proprietary items are available, will be returned for resubmission. If the UFGS contains a “SUBMITTALS” paragraph, the Design-Build Contractor shall delete it and incorporate all required information directly into the design documents. Under no circumstances will the Design-Build Contractor be permitted to use submittals and shop drawings to finalize an incomplete design. UFGS (Uniform Federal Guide Specifications) are required for this project when U.S. products and systems are required or used. Current UFGS information may be obtained at the following location: http://www.wbdg.org/ccb/browse_org.php?o=70.

Specifications for UFGS are in SpecsIntact format. SpecsIntact is government sponsored software used to edit specifications for government contracts. The software is available at the following link: http://specsintact.ksc.nasa.gov/index.asp.

2.5.3 Quality Control and Testing

Specifications shall include required quality control and further indicate all testing to be conducted by the Design-Build Contractor, its subcontractors, vendors and/or suppliers.

2.5.4 Ambiguities and indefinite specifications

Ambiguities, indefinite specification requirements (e.g., highest quality, workmanlike manner, as necessary, where appropriate, as directed etc) and language open to interpretation is unacceptable.

2.5.5 Industry Standards

2.5.5.1 U.S. Industry Standards

The Specifications shall be based on internationally accepted U.S. industry Standards. Customarily accepted publications may be found in the UNIFIED MASTER REFERENCE LIST (UMRL) which may be located at the following URL: http://www.hnd.usace.army.mil/techinfo/UFGS/UFGSref.htm.

To access the UMRL select the “Unified Facilities Guide Specifications” tab and scroll down to Unified Master Reference List (UMRL) (PDF version).

Examples of U.S. standards are: National Fire Protection Association (NFPA), International Building Code (IBC), American Concrete Institute (ACI), American Water Works Association (AWWA), ADAAG (ADA Accessibility Guidelines) for Buildings and Facilities, etc. Standards referenced shall be by specific issue; the revision letter, date or other specific identification shall be included.

This document lists publications referenced in the Unified Facilities Guide Specifications (UFGS) of the Corps of Engineers (USACE), the Naval Facilities Engineering Command (NAVFAC), the Air Force Civil Engineer Support Agency (AFCESA), and the guide specifications of the National Aeronautics and Space Administration (NASA). This document is maintained by the National Institute of Building Sciences (NIBS) based on information provided by the agencies involved and the standards producing organizations. The listing is current with information available to NIBS on the date of this publication.

Standards referenced in specifications and drawings prepared by the Design-Build Contractor shall be by specific issue; the revision letter, date or other specific identification shall be included.

2.5.5.2 Non U.S. Industry Standards

If non U.S. industry standards (e.g., codes, regulations, or technical references and norms) are authorized for use under this contract and are incorporated in the Design-Build Contractor's design, one (1) copy of each standard referenced shall be provided to the Government.

Where a U.S. design and/or construction standard cannot be referenced due to non-availability of products and/or systems, another specification format using the CSI guidelines may be utilized for that particular product and/or system. If a majority of the specifications within this project reference non-U.S. products due to availability and/or other factors, the entire set of specifications are not required to be in UFGS and SpecsIntact format.

2.5.6 Incorporation of Government review comments

Subsequent to submission to the Government, the specifications shall be finalized by the incorporation of Government review comments.

2.6 DRAWINGS

Drawings, prepared in the English language with SI units of measure, are a part of each submittal. The working drawings shall be adequately labeled and cross-referenced for review. Complete, thoroughly checked and coordinated contract drawings shall be submitted. The contract drawings submitted for final review shall include the drawings previously submitted which have been revised and completed as necessary. The Design-Build Contractor shall have incorporated any design review comments generated by previous design review(s), have completed all of his constructability and coordination checks, and have the drawings in a Ready-to-Build condition. The drawings shall be complete at this time and contain all the details necessary to ensure a clear understanding of the work throughout construction.

2.6.1 Drawing Size

Project is required to be in SI units, all drawings shall be prepared in size "A1" sheets (594mm by 841mm). Design submissions may be prepared in half size (279 mm by 420 mm) to save paper and for ease of review. All final contract drawing sets shall be prepared with full size sheets. Drawings shall be trimmed to size if necessary.

2.6.2 Computer Assisted Design and Drafting (CADD)

Computer Assisted Design and Drafting (CADD) is required for all work related to this contract. The CADD deliverables shall meet the requirements of the AEC CAD Standard Release 2.0. Emphasis is on drawings meeting sheet layout standards, level/layer naming standards and sheet naming conventions. CAD standards may be found at the following link: https://tsc.wes.army.mil/products/standards/aec/aecstdweb.asp. Transatlantic Programs Center Design Instructions Manual, Chapter 22 entitled COMPUTER ASSISTED DESIGN AND DRAFTING. The Contractor shall furnish the digital As-Built drawing files in .DWG file format utilizing AutoDesk AutoCAD release 2004 or later. Drawings prepared in any convention other than CADD, must have approval of the Contracting Officer.

2.6.3 Plotter Prepared Original Drawings

Plotter prepared original drawings shall be prepared on 20 pound bond paper, unless otherwise approved and shall be plotted on the matte side. Raster plotters must provide a minimum resolution of 400 dpi while vector plotters shall provide a minimum resolution of 0.0010 inch with an accuracy of +0.1% of the move and a repeatability error of not more than 0.005 inch. Drawings produced from dot matrix plotters are not acceptable. Plots accompanied by the digital design file may be prepared on vellum: translucent bond is not acceptable. Line density shall be equivalent to that produced by black India ink: half-tones and gray scale plots are not acceptable unless otherwise approved. Manual changes to plotted originals are not acceptable.

2.6.4 Half-Size Reduction

Preparation of all work shall accommodate half size reduction unless project is required to meet SI units or shall be instructed otherwise by the Contracting Officer.

2.6.5 Symbols and Abbreviations

Symbols and abbreviations shall be in accordance with AEC CAD Standard Release 2.0 or later /or conform to the symbols used with a CADD program such AutoDesk AutoCAD release 2004 or greater.

2.6.6 Design Discipline Designation Format

Referencing AEC CAD Standard Release 2.0, the drawing package shall be divided into the following proposed divisions as shown in chronological order:

Use the following for AEC CAD Standard Release 2.0:

Discipline Designation	Discipline
C	Civil
A	Architectural
S	Structural
P	Plumbing
M	Mechanical
E	Electrical
F	Fire Protection

Each drawing for the particular facility shall be designated by the discipline designation and sheet number and shall be consecutive within each discipline. AEC CAD Standard, referenced herein, shall be adhered to, especially with regard to sheet naming, numbering and level/layer naming standards. Copies of level/layer naming standards are available at the following locations (in comma delimited format - .CSV) and may be imported into Microstation and/or AutoCAD release 2004 or later:

Public FTP site:
ftp://anonymous:anonymous@ftp.usace.army.mil/pub/aed/Standards/AEC_Nat_CAD_Std/level_libs/
SharePoint site:
https://aedsharepoint.tac.usace.army.mil/C16/Drawings/Document%20Library/AEC_CAD_level_templates.ZIP

2.6.7 Grouping Drawings

A building or individual facility design shall, except for site development drawings, be grouped in the design drawing package so that a single building may be withdrawn by deleting or removing a consecutive block of sheets.

2.6.8 Title and Revision Block

Title and revision block shall match examples shown in **1335a-Attachments-AED**, Figures 1 through 5, furnished as an attachment to this RFP.

2.6.9 Drawing Scales

The scales indicated on the following list shall, in general, be used for all drawings. The Contractor may, at its option, make exceptions to scales indicated, if approved in writing by the Contracting Officer.

Site, Grading and Utility Plans - 1:500, if in SI units

Key Plans as large as practical

Cross Sections/elevations (as large scale as possible to adequately show required detail) - 1:100, if in SI units

Details - 1:10 minimum, if in SI units

2.6.10 Binding

All volumes of drawing prints shall be firmly bound and shall have covers of heavier bond than the drawing sheets. If posts are used to fasten sheets together, the drilled holes on the bond edges of the sheets shall be on 8-1/2-inch centers.

2.6.11 Typical Sheets

Typical sheets of standard details uniformly used on all buildings are authorized and encouraged. Sheets of standard details may be prepared so that they can be reused if the design package must be divided into separate construction packages. Each typical detail drawing sheet may be limited to a particular design discipline. Standard detail sheets shall be organized by discipline as are the other drawing sheets. Details peculiar to one facility shall not be shown in the standard details but with the group of drawings for the facility to which it pertains.

2.6.12 Sheet page numbers

At initial submission of drawings, all plan sheets shall be numbered sequentially from 1 to "x", with "x" being the total number of drawings. See Paragraph 2.6.6 Design Discipline Designation Format guidance and "1335a-Attachments-AED, Figure 1 – AED Title Block sheet number/description" for further Sheet Reference Number requirements. Additional drawings not yet developed can be "reserved" in the Index and included in the initial numbering, or can be added later and named as follows.

For an Architectural sheet ADDED immediately after this page,

Sheet Reference Number
A-009
Sheet 09 of 43

the page would be numbered as below:

Sheet Reference Number
A-009A
Sheet 09A of 43

Other architectural, or other discipline, drawings would be likewise added and annotated on the Index sheet and on the individual drawing Sheet Reference Number Block.

2.6.13 Drawing File Number

The File Number is unique to each drawing and is a combination of a project location code, project number, facility designator and the CADD file name. Unassigned numbers or skipped sheets shall be labeled as "Not Used" on the index sheets. Cover sheets are not numbered.

2.6.14 Specifications Placed on the Drawings

Details of standard products or items which are adequately covered by specifications shall not be included on the drawings.

2.6.15 Legends

For each submittal, legends of symbols and lists of abbreviations shall be placed on the drawings. They shall include all of the symbols and abbreviations used in the drawing set, but shall exclude any symbols and abbreviations not used. Since many symbols are limited to certain design disciplines, there is a definite advantage to the use of separate legends on the initial sheet of each design discipline or in the Standard Details package for each discipline. If legends have not been shown by discipline, a legend shall be placed on the first drawing.

2.6.16 Location Grid

To facilitate the location of project elements and the coordination of the various disciplines' drawings, all plans shall indicate a column line or planning grid, and all floor plans (except structural plans) shall show room numbers.

2.6.17 Composite and Key Plans

If the plan of a large building or structure must be placed on two or more sheets in order to maintain proper scale, the total plan shall be placed on one sheet at a smaller scale. Appropriate key plans and match lines shall appear on segmented drawings. Key plans shall be used not only to relate large scale plans to total floor plans but also to relate individual buildings to complexes of buildings. Key plans shall be drawn in a convenient location and shall indicate the relative location of the represented plan area by crosshatching.

2.6.18 Revisions

Drawing revisions shall be prepared only on the original CADD files. A revision area is required on all sheets.

PART 3 EXECUTION

3.1 GENERAL

3.1.1 Design Concept Coordination Meeting

In addition to regular meetings with the Government the Contractor shall conduct formal status briefings on a monthly basis, as a minimum, to provide a management overview of design development. Shortly after contract award the Government may choose to conduct meetings with the Design-Build Contractor to refine proposal concept features. The purpose of the meeting is to assure attention to project requirements and to suggest ways of improving the design prior to tentative level submissions.

3.1.2 Government Design Changes

Government design changes which do not increase construction costs shall be made at no charge to the Government. The Contracting Officer may request design submittals in addition to those listed when deemed necessary to adequately describe the work covered in the contract documents. Submittals shall be made in the respective number of copies and to the respective addresses set forth in the paragraph entitled SUBMITTAL PROCEDURE. Each submittal shall be complete and in sufficient detail to allow ready determination of compliance with contract requirements.

3.2 SUBMITTAL REGISTERS

3.2.1 Contractor-Furnished Design Documents Submittal Register (TAC Form 122-E)

3.2.1.1 General

The Contractor shall submit as part of his Project Schedule, information regarding the submittal and clearance for construction of Contractor furnished design documents. In addition, the Contractor shall provide a complete submittal register in the sample format (TAC Form 122-E - Contractor Furnished Design Documents Submittal Register) which is attached to this section. The Contractor shall, within fifteen (15) calendar days after approval of the Project Schedule, submit 3 copies of his finalized Contractor Furnished Design Document Submittal Register to the Contracting Officer for approval. The submittal register shall consist of a tabulation of all the Contractor furnished design documents with the indicated dates integrated into the Design Progress Schedule. The Contractor shall post all actual dates of submittal actions (including clearance for construction) as they occur.

3.2.1.2 Additions or Revisions

Any additions or changes required to be made to the TAC Form 122-E as a result of the Contracting Officer's review shall be incorporated into the TAC Form 122-E by the Contractor and a re-submittal of 35% and 100% design submittal and (3) copies shall be affected within five (5) calendar days after receipt of the Contracting Officer's review comments.

3.2.1.3 Submission Requirements

A copy of the initial TAC Form 122-E and each monthly update prepared by the Contractor, shall be submitted to

AFGHANISTAN ENGINEER DISTRICT

(1) DHL, FEDEX, UPS or any other courier service:
U.S. Army Corps of Engineers
Afghanistan Engineer District
House # 1, St. #1 West
West Wazir Akbar High School
Behind Amani High School
Kabul, Afghanistan
Attn.: Chief, Engineering & Construction Division

or

(2) U.S. Postal Service:
U.S. Army Corps of Engineers
Afghanistan Engineer District (CEAED-EC)
Attn.: Chief, Engineering & Construction Division
APO AE 09356

3.2.2 Construction Submittal Register (ENG Form 4288)

Attached to this section is ENG Form 4288 which the Contractor is responsible for developing for this contract. All construction submittals shall be shown on this register. The submittal register shall be the controlling document and will be used to control all construction submittals throughout the life of the contract. The Contractor shall maintain and update the register on a monthly basis for the Contracting Officer's approval.

3.3 TRANSMITTAL FORM (ENG Form 4025)

The sample transmittal form (ENG Form 4025) attached to this section shall be used for submitting both design and construction submittals in accordance with the instructions on the reverse side of the form. These forms will be furnished to the Contractor. This form shall be properly completed by filling out all the heading blank spaces and identifying each item submitted. Special care will be exercised to ensure proper listing of the specification paragraph and/or sheet number of the contract drawings pertinent to the data submitted for each item.

3.4 PROGRESS SCHEDULE

The Contractor shall prepare and submit a design progress schedule to the Contracting Officer. The Critical Path Method (CPM) of network calculation shall be used to generate the Project Schedule. The progress schedule shall show, as a percentage of the total design price, the various items included in the contract and the order in which the Contractor proposes to carry on the work, with dates on which he will start the features of the work and the contemplated dates for completing same. Significant milestones such as review submittals shall be annotated. The Contractor shall assign sufficient technical, supervisory and administrative personnel to insure the prosecution of the work in accordance with the progress schedule. The Contractor shall correct the progress schedule at the end of each month and shall deliver Submittal section AED (3) copies to the

Contracting Officer. The approved Project Schedule shall be used to measure the progress of the work, to aid in evaluating time extensions, and to provide the basis of all progress payments.

3.5 SCHEDULING

3.5.1 Design Submittals

Adequate time (a minimum of fourteen (14) calendar days exclusive of mailing time) shall be allowed for review and clearance for construction. If the Contractor fails to submit design submittals in a timely fashion, or repetitively submits design submittals that are not in strict conformance with the contract documents, no part of the time lost due to such actions shall be made the subject of claim for extension of time or for excess costs or damages by the Contractor.

3.5.2 Post Design Construction Submittals

Submittals covering component items forming a system or items that are interrelated shall be scheduled to be coordinated and submitted concurrently. Certifications to be submitted with the pertinent drawings shall be so scheduled. Adequate time (a minimum of fourteen (14) calendar days exclusive of mailing time) shall be allowed for review and approval. If the Contractor fails to submit post design construction submittals in a timely fashion, or repetitively submits submittals that are not in strict conformance with the contract documents, no part of the time lost due to actions shall be made the subject of claim for extension of time or for excess costs or damages by the Contractor.

3.6 SUBMITTAL PROCEDURE

3.6.1 Design Submittals

3.6.1.1 Afghanistan Engineer District (AED)

Two (2) half-size hard copies and one (1) soft copy on CD-ROM of all design submittals (calculations, reports of field tests, design analysis, plans, specifications, etc) shall be transmitted to the Government using one of the following addresses, by means of ENG Form 4025:

AFGHANISTAN ENGINEER DISTRICT

(1) DHL, FEDEX, UPS or any other courier service:
U.S. Army Corps of Engineers
Afghanistan Engineer District
House # 1, St. #1 West
West Wazir Akbar High School
Behind Amani High School
Kabul, Afghanistan
Attn.: Chief, Engineering Branch

or

(2) U.S. Postal Service:
U.S. Army Corps of Engineers
Afghanistan Engineer District (CEAED-EC)
Attn.: Qalaa House
APO AE 09356

3.6.1.2 Resident/Area Engineer Office

Complete design submittals shall be provided to the Area and/or Resident Engineer Office such that these are received **at the same time** as these submittals are delivered to the AED address in Para. 3.6.1.1. At the Pre-Construction meeting, the Contractor will be furnished the Area and/or Resident Office addresses to which these submittals shall be provided.

3.6.1.3 Deliverables "Cleared for Construction"

Once the Design Documents have been "Cleared for Construction" by the Contracting Officer, the Design-Build Contractor shall clearly identify each document by annotating it as “Cleared for Construction”. One (1) complete hardcopy and CD set of all finalized design documents shall be submitted to the Government as follows:

a. AFGHANISTAN ENGINEER DISTRICT

(1) DHL, FEDEX, UPS or any other courier service:
U.S. Army Corps of Engineers
Afghanistan Engineer District
House # 1, St. #1 West
West Wazir Akbar High School
Behind Amani High School
Kabul, Afghanistan
Attn: Chief, Engineering Branch

or

(2) U.S. Postal Service:
U.S. Army Corps of Engineers
Afghanistan Engineer District (CEAED-EC)
Attn.: Chjef, Engineering Branch
APO AE 09356

b. Area Engineer Office.

c. Resident Engineer Office.

3.6.1.4 Editable CADD Format As-Builts

This is a Design-Build project and in accordance with Contract Clause 52.227-7022 GOVERNMENT RIGHTS (UNLIMITED), the Government has non-exclusive rights to use the design on other projects. Therefore, the As-Builts furnished to the Government must be in an editable format. See Section 01780A CLOSEOUT SUBMITTALS, Paragraphs 1.1 and 1.2, for all requirements associated with submission of editable CADD format As-Builts required as part of this contract.

3.6.1.5 Digital Transmission of Design Submittals

The Design-Build Contractor may submit design deliverables addressed by this specification in digital format. The following procedure shall be followed:

a. USE OF FILE TRANSFER PROTOCOL (FTP) SERVER. The Design-Build contractor will download all design files on either its own File Transfer Protocol (FTP) Server, the Corps FTP Server or as otherwise directed. Afghanistan Engineer District (AED) prefers that the contractor provide the soft copy of design submittals be burned to CD-ROM and submitted as such. The procedure to be followed will be established at the Pre-Construction Conference and the appropriate log-in and password information will be exchanged between the Government and the Design-Build Contractor.

AED accepts AutoDesk AutoCad release 2004 or higher drawing file format as the standard due to the fact that the local region does not support Microstation.

b. TRANSLATED OR CONVERTED FILES DRAWING FILES. Digital drawing files shall be prepared as indicated in the paragraph entitled COMPUTER ASSISTED DESIGN AND DRAFTING (CADD). Under NO circumstances shall the Design-Build Contractor translate (or convert) the files from AutoDesk AutoCAD to Bentley Microstation.

c. NOTIFICATION. The Design-Build Contractor shall notify all recipients by email that the Design submittal has been downloaded to the designated FTP server or electronically provided on a CD and is ready for Government review. This email shall include a scanned copy of the ENG Form 4025 signed by the Design-Build Contractor's Contractor Quality Control (CQC) Organization. It shall also include an updated digital copy of TAC Form 122-E. The Government will use the digital submittal as an advance copy pending receipt of an official hardcopy version in accordance with the paragraph entitled SUBMITTAL PROCEDURE. Subsequent to a period of demonstrated successful performance, the Government may elect to eliminate the requirement to submit an official hardcopy version.

The TAC Form 122-E shall be prepared in a spread sheet software that readily allows the file to be saved as a *.CSV file that can subsequently be imported into the Corps of Engineers Resident Management System (RMS) software.

d. RETURN OF GOVERNMENT REVIEWED SUBMITTALS. Subsequent to the Government review, the Eng Form 4025 with comments (if applicable) will be returned to the Design-build Contractor digitally by email. Hardcopies of these documents will subsequently be submitted to the Design-Build Contractor via the United States Postal Service (USPS). The Government may elect to stop sending hardcopies if it deems that digital transmission of design submittals is progressing satisfactorily.

e. SUPPLEMENTAL ACTIONS. All supplemental actions, resubmittals, and subsequently scheduled submissions shall be performed by the Design-Build contractor as indicated within this paragraph.

3.6.2 Post Design Construction Submittals

Two (2) copies of all post design construction submittals shall be transmitted to:

AFGHANISTAN ENGINEER DISTRICT

(1) DHL, FEDEX, UPS or any other courier service:
U.S. Army Corps of Engineers
Afghanistan Engineer District
House # 1, St. #1 West
West Wazir Akbar High School
Behind Amani High School
Kabul, Afghanistan
Attn: Chief, Engineering Branch

(2) U.S. Postal Service:
U.S. Army Corps of Engineers
Afghanistan Engineer District (CEAED-EC)
Attn.: Chief, Engineering Branch
APO AE 09356

3.6.3 Submittal Numbering System

Instructions on the numbering system to be used for construction submittals follows.

3.6.3.1 Submittals

Shop drawings and materials are listed on the Submittal Register (ENG Form 4288) as follows:

a. List is prepared according to contract specifications and drawings, picking up all items involved in the project.

b. This list is divided into sections as indicated in the specifications. For example:

Sec 01015	"Technical Requirements"
Sec 01335	"Design Submittals"
Sec. 02831	"Chain-Link Fence"
Sec. 02710	"Subdrainage System"
Sec 03300	"Concrete For Building Construction"
Sec. 04200	"Masonry"

3.6.3.2 Numbering procedures for transmittal on ENG FORM 4025

3.6.3.2 Numbering procedures for transmittal on ENG FORM 4025

Each Specification Section will have various requirements for submittals (design information, product data, test reports, procedures, etc.) to the Government for Approval (GA) or For Information Only (FIO). Items from different Sections cannot be submitted on the same ENG Form 4025. When furnishing one or more items from the same Section at a given time, a single ENG Form 4025 can be used to identify and submit these items. Block 'b" of the 4025 entitled "DESCRIPTION OF ITEM SUBMITTED" should provide an accurate and unique description of each item being proposed by the Contractor. Item numbers (block "a" of the 4025 entitled "ITEM NO.") will be automatically generated in QCS for each ENG Form 4025. QCS will track and automatically generate the "ITEM NO." for all following ENG Form 4025s for the same Section number. To illustrate, a transmittal for the 65% Design Submittal required by Section 01335 might have the following Items:

ITEM NO. 1	Topographic Information
ITEM NO. 2	Geotechnical Report
ITEM NO. 3	Foundation Design
ITEM NO. 4	65% Plans
ITEM NO. 5	Outline of Construction Specifications to be used

If this was the first submittal furnished by the Contractor for Section 01335, then a Transmittal Number of 01335-1 would be generated using QCS. As new transmittals are generated in QCS, the last digit of the transmittal is increased incrementally, as follows:

Transmittal No. 01335-2
Transmittal No. 01335-3
Transmittal No. 01335-4

and so forth. The first transmittal submitted from each Specification Section will be "-1", in other words, there will never be a "Transmittal No. 01335-0".

The above illustration is true for all other Specification Sections included in the Request for Proposal or in the Construction Specifications compiled by the Design-Build Contractor in the prosecution of work under the RFP.

For design reviews the standard Corps of Engineers method of review is through DrChecks$_{SM}$ through projnet https://www.projnet.org/projnet/binKornHome/index.cfm All of AED design submittal reviews shall be done through DrChecks$_{SM}$.

3.6.3.3 Resubmittals

Should the Contractor be required to resubmit any transmittal due to one or more items on that transmittal being Coded “C” (Approved, except as noted, Resubmission Required) or “E” (Disapproved) by the Government, it will be accomplished by using QCS to generate the same transmittal number followed by the number "-1" for the first resubmittal, "-2" for the second resubmittal, "-3" for the third resubmittal, etc.

As an example, assume the 65% Design Submittal is provided to the Government as Transmittal 01335-9. Due to omissions or errors in that Submittal which result in a Code “E” being given, then the subsequent 65% Design Resubmittal #1 would be “Transmittal 01335-9.1”. Should a resubmittal again be necessary, it would be Design Resubmittal #2 and would be submitted as “Transmittal 01335-9.2”.

The purpose of this system is to avoid deviations from the Submittal Register and to track submittals in both RMS and DrChecks$_{SM}$. It should be noted that a new transmittal number following the above system CANNOT be generated in QCS unless the prior transmittal has been given a Code, and if the Design-Build Contractor is having difficulty generating the correct transmittal number contact with the COR should be made to accomplish this coding in RMS.

3.6.4 Variations

If design documents or construction submittals show variations from the contract parameters and/or requirements, the Contractor shall justify such variations in writing, at the time of submission. Additionally, the Contractor shall also annotate block "h" entitled "variation" of ENG FORM 4025. After design submittals have been reviewed and cleared for construction by the Contracting Officer, no resubmittal for the purpose of substituting materials, equipment, systems, and patented processes will be considered unless accompanied by the following:

a. Reason or purpose for proposed variation, substitution, or revision.

b. How does quality of variation compare with quality of the specified item? This shall be in the form of a technical evaluation tabulating differences between the item(s) originally specified and what is proposed.

c. Provide a cost comparison. This shall include an acquisition and life cycle cost comparison.

d. For proprietary materials, products, systems, and patented processes a certification signed by an official authorized to certify in behalf of the manufacturing company that the proposed substitution meets or exceeds what was originally specified.

e. For all other actions, a certification signed by a licensed professional engineer or architect certifying that the proposed variation or revision meets or exceeds what was originally specified.

f. Advantage to the Government, if variation is approved, i.e. Operation and Maintenance considerations, better product, etc.

g. Ramifications and impact, if not approved.

If the Government review detects any items not in compliance with contract requirements or items requiring further clarification, the Contractor will be so advised. Lack of notification by the Contracting Officer of any non-complying item does not relieve the Contractor of any contractual obligation.

3.6.5 Non-Compliance

The Contracting Officer will notify the Contractor of any detected noncompliance with the requirements of this specification. The Contractor shall take immediate corrective action after receipt of such notice. Such notice,

when delivered to the Contractor at the worksite, shall be deemed sufficient for the purpose of notification. If the Contractor fails or refuses to comply promptly, the Contracting Officer may issue an order stopping all or part of the work until satisfactory corrective action has been taken. No part of the time lost due to such stop orders shall be made the subject of claim for extension of time or for excess costs or damages by the Contractor.

3.7 REVIEW OF CONTRACTOR PREPARED DESIGN DOCUMENTS

3.7.1 General

The work under contract will be subject to continuous review by representatives of the Contracting Officer. Additionally, joint design review conferences with representation by all organizations having a direct interest in the items under review may be held. The Design-Build Contractor shall furnish copies of all drawings and related documents to be reviewed at the review conference on or before the date indicated by the Government. Additional conferences pertaining to specific problems may be requested by the Design-Build Contractor or may be directed by the Contracting Officer as necessary to progress the work. The Design-Build Contractor shall prepare minutes of all conferences and shall furnish two copies to the Contracting Officer within seven (7) days after the conference.

3.7.2 Independent Design Review

The Design-Build Contractor shall have someone other than the Designer or Design Team perform an independent review of all specifications, drawings, design analysis, calculations, and other required data prior to submission to the Government. Upon completion of this review, the Design-Build Contractor shall certify that each design submittal is complete, accurate, is in strict conformance with all contract requirements, that repetition has been avoided, that all conflicts have been resolved, and that the documents have thoroughly coordinated and cross checked against all the applicable disciplines to prevent the omission of vital information.

3.7.3 Contractor's Quality Control Organization Review

The Contractor shall thoroughly review each submittal prior to submission to the Contracting Officer to assure it is complete, correct and unified. This review shall be for the purposes of eliminating errors, interferences, and inconsistencies, and of incorporating design criteria, review comments, specifications, and any additional information required. The Contractor will give evidence of such review of all items in each submittal ENG Form 4025, by annotating Column “g” (titled “For Contractor Use Code”) of this Form with the letter “A,” meaning the Design-Build Contractor has reviewed it and is indicating it is “Approved as Submitted”. Design submittals submitted to the Contracting Officer without evidence of the above requirements or the Contractor's certified approval will be returned for resubmission. No part of the time lost due to such resubmissions shall be made the subject of claim for extension of time or for excess costs or damages by the Contractor.

3.7.4 Government Review

Within 14 days after Notice to Proceed, the Contractor shall submit, for approval, a complete design schedule with all submittals and review times indicated in calendar dates. The Contractor shall update this schedule monthly. After receipt, the Government will be allowed fourteen (14) days to review and comment on all Design Submittals, except as noted below. For each design review submittal, comments from the various design sections and from other concerned agencies involved in the review process will be made in the on-line review management system DrChecks$_{SM}$ (https://www.projnet.org/projnet/binKornHome/index.cfm). Contractor shall coordinate with the Contracting Officer and/or Representative(s) to register for DrChecks$_{SM}$ use. The review will be for conformance with the technical requirements of the solicitation and the Successful Offeror's (Contractor's) RFP proposal.

If a design submittal is deficient, it will be returned for correction and resubmission. The review time will begin when the corrected submittal is received. The Design-Build Contractor may be liable for liquidated damages owed to the Government for returned design submittals due to deficiencies.

The contractor shall not begin construction work until the Government has reviewed the Design-Build Contractor's design and has cleared it for construction. Clearance for construction does not mean Government approval. Government review shall not be construed as a complete check but will evaluate the general design approach and adherence to contract parameters. The Government Review is often limited in time and scope. Therefore, the Design-Build Contractor shall not consider any review performed by the Government as an excuse for incomplete work. Upon completion of the review, all comments will be forwarded to the Contractor. The Contracting Officer will indicate whether the design submittal has or has not been cleared for construction using the following action codes:

A – Cleared for Construction

B – Cleared for Construction, except as noted in attached comments

C – Cleared for Construction, except as noted in attached comments, resubmission required

E - NOT Cleared for Construction, see attached comments, resubmission required

FX – Receipt acknowledged, does not comply as noted with contract requirements.

These codes shall NOT be used by the Design-Build Contractor.

Design submittals Cleared for Construction by the Contracting Officer shall not relieve the Contractor from responsibility for any design errors or omissions and any liability associated with such errors, nor from responsibility for complying with the requirements of this contract.

3.7.4.1 Incorporation of Government Review Comments

If the Contractor disagrees technically with any comment or comments and does not intend to comply with the comment, he must clearly outline, with ample justification, the reasons for noncompliance within five (5) days after close of review period in order that the comment can be resolved. The Contractor shall furnish disposition of all comments in DrChecks$_{SM}$, with the next scheduled submittal. The disposition shall identify action taken with citation of location within the relevant design document. Generalized statements of intention such as "will comply" or "will revise the specification" are not acceptable. The Contractor is cautioned that if he believes the action required by any comment exceeds the requirements of this contract, that he should flag the comment in DrChecks$_{SM}$ as a scope change, and notify the COR in writing immediately. If a design submittal is over one (1) day late in accordance with the latest design schedule, the Government review period may be extended 7 days. Submittals date revisions must be made in writing at least five (5) days prior to the submittal. During the design review process, comments will be made on the design submittals that will change the drawings and specifications. The Government will make no additional payments to the Contractor for the incorporation of comments. Review comments are considered part of the design-build process.

The Contractor will be furnished comments from the Afghanistan Engineer District, Corps of Engineers, Transatlantic Programs Center (TAC), as well as from other concerned agencies involved in the review process. The review will be for conformance with the technical requirements and parameters of the contract documents. The Contractor shall either incorporate each comment or, if the Contractor disagrees technically and does not intend to comply with the comment(s), the contractor shall clearly outline, with ample justification, its reasons for its noncompliance within five (5) days after receipt of the comment(s). Additionally, the Contractor is cautioned in that if it believes the action required by any comment exceeds the requirements of this contract,

that he should take no action and notify the Contracting Officer in writing immediately. The disposition of all comments shall be furnished in writing with the next scheduled submittal. The review comments and the submittal material for each design review will become the basis for any ensuing design work. Copies of the design review comments with the action taken on each comment noted, shall be bound in all succeeding volumes of the design analysis.

3.7.4.2 Conferences

As necessary, conferences will be conducted between the Design-Build Contractor and the Government to resolve review comments.

A review conference may be held at the completion of AED review and subsequent Design-Build contractor response for each design submittal. The review conference will be held at the Corps District Office in Kabul, Afghanistan. The Contractor shall bring the personnel that developed the design submittal to the review conference.

3.7.4.3 Design Deficiencies

Design deficiencies noted by the Government shall be corrected prior to the start of design for subsequent features of work which may be affected by, or need to be built upon, the deficient design work.

3.7.5 Design Discrepancies

The Design-Build Contractor shall be responsible for the correction of incomplete design data, omissions, and design discrepancies which become apparent during construction. The Design-Build Contractor shall provide the Contracting Officer with a proposed recommendation for correcting a design error, within three (3) calendar days after notification by the Contracting Officer. The Contracting Officer will notify the Design-Build Contractor of any detected noncompliance with the foregoing requirements. The Design-Build Contractor shall take immediate corrective action after receipt of such notice. Such notice, when delivered to the Design-Build Contractor at the worksite, shall be deemed sufficient for the purpose of notification. If the Design-Build Contractor fails or refuses to comply promptly, the Contracting Officer may issue an order stopping all or part of the work until satisfactory corrective action has been taken. No part of the time lost due to such stop orders shall be made the subject of claim for extension of time or for excess costs or damages by the Design-Build Contractor. Should extensions of design, fabrication plans and/or specific manufacturer's details be required as a result of a Government issued Change Order, the Government will make an equitable adjustment in accordance with Contract Clause 52.243-4 entitled CHANGES.

3.8 Phased or "Fast-Track" Design

3.8.1 General

If approved by the Government, design and construction sequencing may be effected on an incremental basis as each approved phase or portion (e.g., demolition, geotechnical, site work, exterior utilities, foundations, substructure, superstructure, exterior closure, roofing, interior construction, mechanical, electrical, etc.) of the design is completed.

3.8.1.1 Design Phases

Complete or partial design phasing may or may not have been specified by the Government elsewhere in this contract. For construction sequencing or phasing that the Government has not specifically mandated, the Design-Build Contractor may submit a proposed phasing plan. Design phasing proposed by the Design-Build Contractor shall be submitted to the Government for approval in accordance with TAC Form 122-E CONTRACTOR FURNISHED DESIGN DOCUMENTS.

3.8.2 Sequence of Design-Construction (Fast-Track)

After receipt of the Contract Notice to Proceed (NTP) the Contractor shall initiate design, comply with all design submission requirements and obtain Government review of each submission. The contractor may begin construction on portions of the work for which the Government has reviewed the final design submission and has determined satisfactory for purposes of beginning construction. The Contracting Officer will notify the Contractor when the design is cleared for construction. The Government will not grant any time extension for any design resubmittal required when, in the opinion of the Government, the initial submission failed to meet the minimum quality requirements as set forth in the contract.

3.8.3 Notice-to-Proceed for Limited Construction

If the Government allows the Contractor to proceed with limited construction based on pending minor revisions to the reviewed Final Design submission, no payment will be made for any in-place construction related to the pending revisions until they are completed, resubmitted and are satisfactory to the Government.

3.8.4 In-Place Construction Payment

No payment will be made for any in-place construction until all required submittals have been made, reviewed and are satisfactory to the Government.

3.8.5 Commencement of Construction

Construction of work may begin after receipt of the clearance for construction (Notice to Proceed) for each design phase. Any work performed by the Contractor prior to receipt of the clearance for construction, shall be at the Contractor's own risk and expense. Work cleared for construction that does not conform to the design parameters and/or requirements of this contract shall be corrected by the Contractor at no additional cost or time to the Government.

3.9 DESIGN STAGES

The Contractor shall schedule the number and composition of the design submittal phases. Design submittals are required at the Preliminary Review (65%), Final (99%) design stages, and at the 100% Cleared for Construction stage. The requirements of each design stage are listed hereinafter. The Contractor shall clearly label and date all design submittals to reflect the current design stage and date of submission to the Government to avoid confusion between current and previous submittals.

The design submittals shall reflect the current stage, whether it be 65% Design Submittal; 99% Design Submittal; or 100% Design Submittal.

Any resubmittals shall follow the following naming convention: 65% Design Resubmittal #1; 65% Design Resubmittal #2; 65% Design Resubmittal #3, and so forth for all other later Design Resubmittals.

The Contractor use the above nomenclature and date of submission to the Government for Plan Cover Sheets; title blocks for all drawings; all Specification Cover Sheets; all specification pages; all Design Analysis Cover Sheets and associated pages; and similar labeling for all other documents included in the design submittal.

See the attachment titled “01335a-Attachments-AED.pdf” (Figures 1-5) for required Title Block Required Annotations drawing guidance.

The number and contents of the design submittals phases shall be reflected in TAC Form 122-E as well as in the Contractor's design progress schedule.

3.9.1 Concept Review Submittal (35%)

The review of this submittal is primarily to ensure that the Contractor has taken an inventory of the existing conditions at each proposed site, has established the most desirable functional relationships between the various project elements, has provided the technical solution as to how the functional and technical requirements will be met, and to show Contractor compliance (or justify noncompliance) with the design parameters and/or requirements. Refer to requirements herein for specific submittal requirements. As a minimum, the following documents shall be submitted:

a. Complete site topographic survey and Grading Plan.
b. Geotechnical Report, indicating appropriate information for various site characteristics, soil parameters as determined by certified lab tests, assumed building foundation loads and associated settlement estimates, and a recommendation of the foundation systems to be constructed. Other RFP Section 1010 and 1015 requirements for this Report shall also be included.
c. Preliminary Design Analysis, Preliminary Design Calculations, and full plans and specifications for those features of work the Contractor will request Partial Clearance for Construction after Government review of this 35% Submittal.
d. Remaining features of work shown on 35% design complete Plans;
e. Outline of Construction Specification Sections to be used and those Specification items requiring Government Approval (GA).
f. Full design analysis, drawings, specifications and other GA construction submittal information for project components with long ordering, fabrication and delivery times.

3.9.2 General design (65%):

The review of this submittal is primarily to insure that the contract documents and design analysis are proceeding in a timely manner and that the design criteria are being correctly interpreted. The submittal shall consist of the following:

a. All items required in a normal 35% submittal as indicated above
b. Design Analysis.
c. Draft Construction Specifications (all anticipated sections, edited to include only applicable requirements).
d. Construction Drawings, with full plans and specifications for those features of work the Contractor will again request a Partial Clearance for Construction on after successful and satisfactory Government review. Environmental permits, as required. When environmental permits are not required, the Contractor shall provide a statement with justification to that effect.

3.9.3 Final Review Submittal 100%

The review of this submittal is to insure that the design is in accordance with directions provided the Contractor during the design process. The only effort remaining between the Final Design Review Submittal and the "Cleared For Construction" Design Review Submittal is the incorporation of all Government review comments. The Contractor shall submit the following documents for this review:

a. Design Analysis, developed to a 99% design stage. The Design Analysis shall be in its final form. It shall include all backup material previously submitted and revised as necessary. All design calculations shall be included. The Design Analysis shall contain all explanatory material giving the design rationale for any design decisions which would not be obvious to an engineer reviewing the Final Drawings and Specifications.
b. 99% Complete Construction Specifications. The Draft Specifications on all items of work submitted for Final Review shall consist of marked-up proprietary specifications, edited to include all pertinent features of work and removal of all specifications unrelated to the RFP work. All GA Construction Submittals shall be included.
c. 99% Complete Construction Drawings. The Contract Drawings submitted for Final Review shall include the drawings previously submitted which have been revised and completed as necessary. The Contractor is expected to have completed all of his coordination checks and have the drawings in a design complete condition. The drawings shall be finalized at this time including the incorporation of any design review

comments generated by all past design reviews. The drawings shall contain all the details necessary to assure a clear understanding of the work throughout construction.

d. All AED DrChecks$_{SM}$ comments from prior reviews (and any resubmittals at these design levels) completely addressed and incorporated into project design, plans and specifications.

3.9.4 "Cleared for Construction" Design Review Submittal (100%)

After the Final Design Review Submittal (99%) review, the Contractor shall revise the Contract Documents by incorporating any comments generated during the Final Design Review Submittal and shall prepare final Construction Specifications. The Contractor shall submit the following documents for the design complete submittal:

a. Design Analysis.
b. Construction Specifications.
c. Construction Drawings.
d. A soft copy (CD) of the design drawings, specifications, and design analysis shall be submitted at this stage and all other subsequent stages of the design process.
e. All AED DrChecks$_{SM}$ comments from prior reviews (and any resubmittals at these design levels) must be completely addressed and incorporated into project design, plans and specifications.

Once the design documents have been "Cleared for Construction" by the Contracting Officer, the Design-Build Contractor shall clearly identify each document by annotating it as "Cleared for Construction."

3.9.5 Partial Design Submittals

In the interest of expediting construction, the Contracting Officer may approve partial design submittals, procurement of materials and equipment, as well as issue the Notice To Proceed (NTP) for construction of those elements of the design which have been cleared for construction. Such partial notices to proceed shall be solely at the discretion of the Contracting Officer.

3.9.6 Design Submittals not in compliance with the contract documents

The Contractor shall, without additional compensation, correct or revise any errors or deficiencies in its design analysis, specifications, and drawings, and promptly furnish a corrected submittal in the form and number of copies as specified for the initial submittal. No part of the time lost due to such resubmissions shall be made the subject of claim for extension of time or for excess costs or damages by the Contractor. If the Contractor considers any correction indicated on the submittals to constitute a change to the contract, a notice shall be given promptly to the Contracting Officer.

3.10 GENERAL DESIGN INSTRUCTIONS

3.10.1 Responsibility of the Design-Build Contractor

3.10.1.1 Professional Quality, Technical Accuracy, and Coordination

The Design-Build Contractor shall be responsible for the professional quality, technical accuracy, and the coordination of all design specifications, drawings, and other services furnished under this contract. Work must be organized in a manner that will assure thorough coordination between various details on drawings, between the various sections of the specifications, and between the drawings and specifications. The Design-Build Contractor shall thoroughly cross-check and coordinate all work until he is professionally satisfied that no conflicts exist, vital information has not been omitted, and that indefinite language open to interpretation has been resolved.

3.10.1.2 Deviating From The “Cleared-For-Construction” Design

(a.) The Contractor must obtain the approval of the Designer of Record (DOR) and the Government's concurrence for any Contractor proposed revision to the professionally stamped and sealed design reviewed and Cleared for Construction by the Government, before proceeding with the revision.

(b.) The Government reserves the right to non-concur with any revision to the design, which may impact furniture, furnishings, equipment selections or operations decisions that were made, based on the reviewed and cleared for construction design.

(c.) Any revision to the design, which deviates from the contract requirements (i.e., the RFP and the accepted proposal), will require a modification, pursuant to the Changes clause, in addition to Government concurrence. The Government reserves the right to disapprove such a revision.

(d.) Unless the Government initiates a change to the contract requirements, or the Government determines that the Government furnished design criteria are incorrect and must be revised, any Contractor initiated proposed change to the contract requirements, which results in additional cost, shall strictly be at the Contractor's expense.

(e.) The Contractor shall track all approved revisions to the reviewed and cleared for construction design and shall incorporate them into the As-Built design documentation, in accordance with Section 01780A, CLOSEOUT SUBMITTALS, Paragraphs 1.1 and 1.2, which lists all requirements associated with submission of editable CADD format As-Builts required as part of this contract. The Designer of Record shall document its professional concurrence on the As-Builts for any revisions by affixing its stamp and seal on the drawings and specifications.

3.10.1.3 Government Oversight

The extent and character of the work to be done by the Design-Build Contractor shall be subject to the general oversight, supervision, direction, control, and review by the Contracting Officer.

3.10.1.4 Unlimited Drawing Rights

The Government shall have unlimited rights in all drawings, designs, specifications, notes and all other works developed in the performance of this contract, including the right to use same on any other Government design or construction without additional compensation to the Design-Build Contractor. The Design-Build Contractor hereby grants to the Government a paid-up license throughout the world to all such works to which he may assert or establish any claim under design patent or copyright laws.

3.10.1.5 Conflicts

Any conflicts, ambiguities, questions or problems encountered by the Design-Build Contractor in following the criteria shall be immediately submitted in writing to the Contracting Officer with the Design-Build Contractor's recommendations. Prior to submission to the Government the Design-Build Contractor shall take appropriate measures to obtain clarification of design criteria requirements, to acquire all pertinent design information, and to incorporate such information in the work being performed.

3.10.1.6 Design Specialists

Whenever a design specialist is required, the Design-Build Contractor shall submit for the approval by Contracting Officer, the name of the designated specialist along with the individual's educational background, experience, and licenses or registrations held, before design work commences. The design specialists shall be registered architects, registered professional engineers, or recognized consultants with a background of at least five (5) years design experience in the appropriate specialty. Services of design specialists may be required for the following specialties:

Fire Protection	Landscape Design
Medical Design	Stage/Theater Design
Acoustical Design	Interior Design
Educational Design	Security
Telecommunications	Audio Visual, PA, TV, etc.
Geotechnical Design	Hardened Structures
Asbestos Abatement	X-Ray Shielding
EMF Shielding	Site grading

3.10.2 Conduct of Work

3.10.2.1 Performance

Perform the work diligently and aggressively, and promptly advise the Contracting Officer of all significant developments.

3.10.2.2 Telephone Conversations

Prepare a summary, and promptly furnish a copy thereof to the Contracting Officer, of all telephone conversations relating to the design work under this contract.

3.10.2.3 Cooperation with Others

Cooperate fully with other firms, consultants and contractors performing work under the program to which this contract pertains, upon being advised by the Contracting Officer that such firms or individuals have a legitimate interest in the program, have need-to-know status, and proper security clearance where required.

3.10.2.4 Technical Criteria

All designs, drawings, and specifications shall be prepared in accordance with the contract documents and with the applicable publications referenced therein. As soon as possible, the Design-Build Contractor shall obtain copies of all publications applicable to this contract. Availability of publications (where to purchase) is contained in Specification Section 01420 entitled: SOURCES FOR REFERENCE PUBLICATIONS. Any deviations from the technical criteria contained in the contract documents or in the applicable publications, including the use of criteria obtained from the user or other sources, must receive prior approval of the Contracting Officer. Where the technical criteria contained or referred to herein are not met, the Design-Build Contractor will be required to conform his design to the same at his own time and expense.

3.10.3 Design Priorities

The design of this project shall consider the remote location and harsh environment of this project and the impact this will have on sources of technical supply, the cost of construction, the low level of maintenance, and the difficulty of obtaining replacement parts. Unless stated otherwise in this contract, the following design priorities shall be followed.

3.10.3.1 CONSTRUCTION LIFE-SPAN LEVELS

Permanent Construction. Buildings and facilities shall be designed and constructed to serve a life expectancy of more than 25 years, to be energy efficient, and to have finishes, materials, and systems that are low maintenance and low life-cycle cost.

Semi-Permanent Construction. Buildings and facilities shall be designed and constructed to serve a life expectancy of more than 5 years but less than 25 years, to be energy efficient, and to have finishes, materials, and systems that require a moderate degree of maintenance using the life-cycle cost approach.

Temporary Construction. Buildings and facilities shall be designed and constructed to serve a life expectancy of 2 years or less using low-cost construction, with finishes, materials, and systems that are selected with maintenance factors being a secondary consideration.

Mobilization, Emergency and Contingency Operations Construction. Buildings and facilities shall be designed and constructed to serve a specific mobilization or emergency requirement. Buildings will be austere to minimize construction time and maximize conservation of critical materials. Maintenance factors and longevity will be secondary considerations.

3.10.3.2 Operability

Systems including but not necessarily limited to mechanical, electrical, communications, etc., must be simple to operate and easy to maintain.

3.10.3.3 Standardization

Use of standardized materials, products, equipment, and systems is necessary to minimize the requirements for replacement parts, storage facilities, and service requirements.

3.10.3.4 Overseas Work

Use of construction materials or techniques shall be utilized which are suitable for overseas work in harsh climates and environments.

3.10.4 Topographic Surveys, Easements, and Utilities

Unless otherwise stated in the contract, the Design-Build Contractor will be responsible for detailed topographic mapping, available easements, and utility information for the project.

3.10.4.1 Horizontal and Vertical Control

The mapping shall be based on the base coordinate system. If the base system cannot be found, the surveyor shall use any established monuments. If monuments have been destroyed or do not exist, an assumed horizontal and vertical datum shall be established, using arbitrary coordinates of 10,000n and 10,000e and an elevation of 1,000 meters. The horizontal and vertical control established on site shall be a closed loop with third order accuracy and procedures. Provide three (3) concrete survey monuments at the survey site. All of the control points established at the site shall be plotted at the appropriate coordinate point and shall be identified by name or number, and adjusted elevations. The location of the project site, as determined by the surveyor shall be submitted in writing to the Contracting Officer. The site location shall be identified by temporary markers, approved by the Contracting Officer before proceeding with the surveying work.

3.10.4.2 Topography Requirements

A sufficient quantity of horizontal and vertical control shall be established to provide a detailed topographic survey at 1:500 scale with one quarter meter contour intervals minimum. Intermediate elevations shall be provided as necessary to show breaks in grade and changes in terrain.

The contours shall accurately express the relief detail and topographic shapes. In addition, 90 percent of the elevations or profiles interpolated from the contours shall be correct to within one-half of the contour interval and spot elevations shall be correct within plus or minus 20 millimeters.

Spot elevations affecting design of facilities shall be provided. Specifically, break points or control points in grades of terrain such as tops of hills, bottoms of ditches and gullies, high bank elevations, etc.

All surface and sub-surface structures features within the area to be surveyed shall be shown and identified on the topographic maps. In addition, these features shall be located by sufficient distance ties and labeled on the topographic sheets to permit accurate scaling and identification.

The location and sizes of potable, sanitary, electrical and mechanical utilities within the survey site shall be shown on the survey map. Sanitary manholes and appurtenances shall show top elevations and invert elevations.

3.10.5 Geotechnical Investigation

Unless otherwise stated in the contract, the Design-Build Contractor will be responsible for Geotechnical investigation, including subsurface explorations, sampling, field and laboratory testing, and water studies where applicable.

3.10.6 Cathodic Protection and Earth Resistance

Unless otherwise stated in the contract, the Design-Build Contractor will be responsible for determining whether cathodic protection on buried structures and underground utility systems are needed for special electrical grounding and counterpoise systems, and for gathering the field data necessary for design.

3.10.7 Water Supply and Quality Data

Unless otherwise stated in the contract, the Design-Build Contractor will be responsible for obtaining all water supply and water quality data. This data will include information on the locations and depths of all viable water supply sources at the site(s) involved and a water quantity and water quality analysis for each source.

3.10.8 Occupational Safety and Health Act

The facilities, systems, and equipment designed under this contract shall comply with the Occupational Safety and Health Act (OSHA), Code of Federal Regulations, Title 29, Chapter XVII, Parts 1910 and 1926. Any problems in incorporating these standards due to conflicts with other technical criteria shall be submitted to the Contracting Officer for resolution.

3.10.9 Asbestos Containing Materials

Asbestos containing material (ACM) will not be used in the design of new structures or systems. In the event no other material is available which will perform the required function or where the use of other material would be cost prohibitive, a waiver for the use of asbestos containing materials must be obtained from CETAC.

3.10.9.1 Existing Construction

Asbestos containing materials (ACM) presently included in existing construction to be rehabilitated or otherwise modified as a result of this project shall be removed and a non-asbestos containing material substituted in lieu thereof.

3.10.9.2 Suspected Asbestos Containing Materials

All such structures and systems shall be inspected to determine the presence or probable presence of ACM. When ACM is suspected, a documented survey will be performed. The survey will be developed into an abatement design and will be made a part of the design documents. In the event no other material is available which will perform the required function or the use of a substitute material would be cost prohibitive due to initial cost and tear-out of existing construction, a waiver for the retention of the asbestos containing material must be obtained from the Contracting Officer.

3.11 VALUE METHODOLOGY/VALUE ENGINEERING

The Design-Build Contractor during the course of his design shall be alert for and shall identify those high-cost low-value items or areas which he considers may be accomplished in different ways that will increase the value of the project at the same or less cost. Potential value engineering study items shall be reported to the Value Engineer through the Contracting Officer.

3.11.1 Performance Oriented Value Engineering Change Proposal (VECP)

In reference to Contract Clause 52.248-3, "Value Engineering - Construction", the Government may refuse to entertain a "Value Engineering Change Proposal" (VECP) for those "performance oriented" aspects of the Contract Documents which were addressed in the Design-Build Contractor's accepted contract proposal and which were evaluated in competition with other Proposers for award of this contract. For purposes of this clause, the term "performance oriented" refers to those aspects of the design criteria or other contract requirements which allow the Proposer or the Design-Build Contractor certain latitude, choice of and flexibility to propose in its accepted contract offer a choice of design, technical approach, design solution, construction approach or other approach to fulfill the contract requirements. Such requirements generally tend to be expressed in terms of functions to be performed, performance required or essential physical characteristics, without dictating a specific process or specific design solution for achieving the desired result.

3.11.2 Prescriptive Oriented Value Engineering Change Proposal (VECP)

The Government may consider a VECP for those "prescriptive" aspects of the Solicitation documents, not addressed in the Design-Build Contractor's accepted contract proposal or addressed but evaluated only for minimum conformance with the Solicitation requirements. For purposes of this clause, the term "prescriptive" refers to those aspects of the design criteria or other Solicitation requirements wherein the Government expressed the design solution or other requirements in terms of specific materials, approaches, systems and/or processes to be used. Prescriptive aspects typically allow the Proposers little or no freedom in the choice of design approach, materials, fabrication techniques, methods of installation or other approach to fulfill the contract requirements.

3.12 GOVERNMENT APPROVED CONSTRUCTION SUBMITTALS (Required During Construction)

3.12.1 General

Since this contract requires that the drawings and specifications specify specific proprietary materials, equipment, systems, and patented processes by trade name, make, or catalog number, it is anticipated that construction shop drawings will primarily be limited to testing, construction plans (e.g., Contractor Quality Control, Accident Prevention, Resident Management System, Area Use etc), schedules (Project Schedule/Network Analysis), certificates of compliance, reports, records/statements and variations.

3.12.1.1 Variations

After design submittals have been reviewed and cleared for construction by the Contracting Officer, no submittal for the purpose of substituting materials, equipment, systems, and patented processes will be considered by the Government unless submitted in accordance with the paragraph entitled VARIATIONS.

3.12.1.2 Additional Shop Drawings and Submittals

In accordance with the paragraph entitled DESIGN DISCREPANCIES, the Government may request the Design-Build Contractor to provide additional shop drawing and submittal type data subsequent to completion of the design.

3.12.2 Incomplete Design

The Design-Build Contractor shall not use construction submittals as a means to supplant and/or supplement an incomplete design effort.

3.12.3 Government Approval of Construction Submittals

The approval of construction submittals by the Contracting Officer shall not be construed as a complete check, but will indicate only that the general method of design construction, materials, detailing and other information are satisfactory. Approval will not relieve the Design-Build Contractor of the responsibility for any error which may exist, as it is the sole responsibility of the Design-Build Contractor to certify that each submittal has been reviewed in detail and is in strict conformance with all the contract documents and design criteria referenced therein.

Virtually all design related construction submittals can and must be incorporated directly into the design specifications and drawings prepared by the Design-Build Contractor. Since the Design-Build Contractor has sole responsibility for the design, procurement, and construction, impediments do not exist which would impair his ability to specifically identify what is being furnished to the Government prior to the start of construction. Generic/non-proprietary specifications are indicative of an incomplete design effort and as such must be rejected as unacceptable

3.12.4 Submittals

Submittals (other than shop drawings) shall be limited to items such as Plans (e.g., Quality Control Plan, Accident Prevention Plan, Area Use Plan etc.),Certificates of Compliance, Installation Instructions, Manufacturer's Catalog Data, Descriptive Literature/Illustrations, Factory and Field Test Reports, Performance and Operational Test Data Reports, Records, Operation and Maintenance Manuals, and required variations.

3.12.5 Government Review

Upon completion of review of construction submittals requiring Government approval, the submittals will be identified as having received approval by being so stamped and dated. Two (2) copies of the submittal will be retained by the Contracting Officer and one (1) copy of the submittal will be returned to the Design-Build Contractor.

3.13 FOR INFORMATION ONLY SUBMITTALS

These submittals shall be checked, stamped, signed and dated by the Design-Build Contractor's Quality Control Engineer, certifying that such submittal complies with the contract requirements. All Contractor submittals shall be subject to review by the Government at any time during the course of the contract. Any Contractor submittal found to contain errors or omissions shall be resubmitted as one requiring "approval". No adjustment for time or money will be allowed for corrections required as a result of noncompliance with plans or specifications. Normally submittals for information only will not be returned. Approval of the Contracting Officer is not required on information only submittals. These submittals will be used for information purposes. The Government reserves the right to require the Design-Build Contractor to resubmit any item found not to comply with the contract. This does not relieve the Design-Build Contractor from the obligation to furnish material conforming to the plans and specifications and will not prevent the Contracting Officer from requiring removal and replacement if nonconforming material is incorporated in the work.

3.16 ATTACHMENTS

The following attachments form an integral part of this specification:

ENG FORM 4025 - Transmittal of Shop Drawings, Equipment Data, Material Samples, or Manufacturer's Certificate of Compliance (2 pages)

TAC FORM 122-E - Contractor Furnished Design Documents Submittal

Register

ENG FORM 4288 - Submittal Register

Figure 1 – From AEC CADD Standards; AED Title Block – sheet number/descriptions

Figure 2 - From AEC CADD Standards; AED Title Block – A-E logo/designed by/reviewed by/submitted by

Figure 3 - From AEC CADD Standards; AED Title Block – Revisions Block dimensioning

Figure 4 - From AEC CADD Standards; AED Title Block Required Notations

Figure 5 – From AEC CADD Standards; Finished Format Size

-- End of Section -

SECTION 01415 METRIC MEASUREMENTS

1.1 REFERENCES

The publications listed below form a part of this specification to the extent referenced. The publications are referred to within the text by the basic designation only.

ASTM INTERNATIONAL (ASTM)

ASTM E 621	(1994; R 1999e1) Use of Metric (SI) Units in Building Design and Construction (Committee E-6 Supplement to E380)
ASTM SI 10	(2002) American National Standard for Use of the International System of Units (SI): The Modern Metric System

1.2 GENERAL

This project includes metric units of measurements. The metric units used are the International System of Units (SI) developed and maintained by the General Conference on Weights and Measures (CGPM); the name International System of Units and the international abbreviation SI were adopted by the11th CGPM in 1960. A number of circumstances require that both metric SI units and English inch-pound (I-P) units be included in a section of the specifications. When both metric and I-P measurements are included, the section may contain measurements for products that are manufactured to I-P dimensions and then expressed in mathematically converted metric value(soft metric) or, it may contain measurements for products that are manufactured to an industry recognized rounded metric (hard metric)dimensions but are allowed to be substituted by I-P products to comply with the law. Dual measurements are also included to indicate industry and/or Government standards, test values or other controlling factors, such as the code requirements where I-P values are needed for clarity or to trace back to the referenced standards, test values or codes.

1.3 USE OF MEASUREMENTS IN SPECIFICATIONS

Measurements in specifications shall be either in SI or I-P units as indicated, except for soft metric

measurements or as otherwise authorized. When only SI or I-P measurements are specified for a product, the product shall be procured in the specified units (SI or I-P) unless otherwise authorized by the Contracting Officer. The Contractor shall be responsible for all associated labor and materials when authorized to substitute one system of units for another and for the final assembly and performance of the specified work and/or products.

1.3.1 Hard Metric

A hard metric measurement is indicated by an SI value with no expressed correlation to an I-P value. Hard metric measurements are often used for field data such as distance from one point to another or distance above the floor. Products are considered to be hard metric when they are manufactured to metric dimensions or have an industry recognized metric designation.

1.3.2 Soft Metric

a. A soft metric measurement is indicated by an SI value which is a mathematical conversion of the I-P value shown in parentheses (e.g. 38.1 mm (1-1/2 inches)). Soft metric measurements are used for measurements pertaining to products, test values, and other situations where the I-P units are the standard for manufacture, verification, or other controlling factor. The I-P value shall govern while the metric measurement is provided for information.

b. A soft metric measurement is also indicated for products that are manufactured in industry designated metric dimensions but are required by law to allow substitute I-P products. These measurements are indicated by a manufacturing hard metric product dimension followed by the substitute I-P equivalent value in parentheses (e.g., 190 x 190 x 390 mm (7-5/8 x 7-5/8 x 15-5/8inches)).

1.3.3 Neutral

A neutral measurement is indicated by an identifier which has no expressed relation to either an SI or an I-P value (e.g., American Wire Gage (AWG) which indicates thickness but in itself is neither SI nor I-P).

1.4 COORDINATION

Discrepancies, such as mismatches or product unavailability, arising from use of both metric and non-metric measurements and discrepancies between the measurements in the specifications and the measurements in the drawings shall be brought to the attention of the Contracting Officer for resolution.

1.5 RELATIONSHIP TO SUBMITTALS

Submittals for Government approval or for information only shall cover the SI or I-P products actually being furnished for the project. The Contractor shall submit the required drawings and calculations in the same units used in the contract documents describing the product or requirement unless otherwise instructed or approved. The Contractor shall use ASTM SI 10 and ASTM E 621 as the basis for establishing metric measurements required to be used in submittals.

-- End of Section -

SECTION 01451 CONTRACTOR QUALITY CONTROL

SPECIFICATION

Revised 16 December 2008

PART 1 - GENERAL:

1.1. REFERENCES: The publications listed below form a part of this specification to the extent referenced. The publications are referred to within the text by the basic designation only.

1.1.A. U.S. ARMY CORPS OF ENGINEERS (USACE):

1.1.A.1. ER 1110-1-12 (1993)	Quality Management
1.1.A.2. EM 385-1-1	Safety and Health Requirements Manual

1.1.B. ASTM INTERNATIONAL (ASTM):

1.1.B.1. ASTM D 3740	(2004) Minimum Requirements for Agencies Engaged in the Testing and/or Inspection of Soil and Rock as Used in Engineering Design and Construction
1.1.B.2. ASTM E 329	(2003) Agencies Engaged in the Testing and/or Inspection of Materials Used in Construction

1.2. PAYMENT: Separate payment will not be made for providing and maintaining an effective Quality Control program, and all costs associated therewith shall be included in the applicable unit prices or lump-sum prices contained in the Bidding Schedule.

PART 2 - PRODUCTS: (Not Applicable)

PART 3 - EXECUTION:

3.1. GENERAL REQUIREMENTS: The Contractor is responsible for quality control and shall establish and maintain an effective quality control system in compliance with the Contract Clauses and this specification section. The quality control system shall consist of plans, procedures, and organization necessary to produce an end product which complies with the contract requirements. The system shall cover all construction operations, both onsite and offsite, and shall be keyed to the proposed construction sequence. The site project superintendent will be held responsible for the quality of work on the job and is subject to removal by the Contracting Officer for non-compliance with the quality requirements specified in the contract. The site project superintendent in this context shall be the highest level manager responsible for the overall construction activities at the site, including quality and production. The site project superintendent shall maintain a physical presence at the site at all times, except as otherwise acceptable to the Contracting Officer, and shall be responsible for all construction and construction related activities at the site.

3.2. CQM TRAINING REQUIREMENT: Before project design and construction begin, the Contractor's Quality Control Manager is required to have completed the U.S. Army Corps of Engineers CQM course, or equivalent. The Commercial Technical Training Center (CTTC), operated by the United Rehabilitation Bureau in Jalalabad, Afghanistan, provides a course that satisfies the requirement. Courses are offered at regular intervals. For enrollment and course information contact CTTC at the following:

3.2.A. Dr Pervez Mojadidi
Project Manager, United Rehabilitation Bureau
Email: adpzmuj@yahoo.com
Phone: (93) 0700-613-133, 0786489933

3.2.B. Engr. Said Wali Shinwari
Director, United Rehabilitation Bureau
Email: urb1992@yahoo.com
Phone: (93) 0700-287-626, 0797520380

3.3. QUALITY CONTROL PLAN: The Contractor shall furnish for review by the Government, not later than five (5) days after receipt of Notice-to-Proceed (NTP) the proposed Contractor Quality Control (CQC) Plan. The plan shall identify personnel, procedures, control, instructions, records, and forms to be used.

3.3.A. Content of the CQC Plan: The CQC Plan shall include, as a minimum, the following to cover all construction operations, both on site and off-site, including work by subcontractors, fabricators, suppliers and purchasing agents:

3.3.A.1. A description of the quality control organization, including a chart showing lines of authority and acknowledgment that the CQC staff shall implement the three phase control system for all aspects of the work specified. The staff shall include a CQC System Manager who shall report to the project superintendent.

3.3.A.2. The name, qualifications (in resume format), duties, responsibilities, and authorities of each person assigned a CQC function.

3.3.A.3. A copy of the letter to the CQC System Manager signed by an authorized official of the firm which describes the responsibilities and delegates sufficient authorities to adequately perform the functions of the CQC System Manager, including authority to stop work which is not in compliance with the contract. The CQC System Manager shall issue letters of direction to all other various quality control representatives outlining duties, authorities, and responsibilities. Copies of these letters shall also be furnished to the Government.

3.3.A.4. Procedures for scheduling, reviewing, certifying, and managing submittals, including those of subcontractors, offsite fabricators, suppliers, consultants, and purchasing agents. These procedures shall be in accordance with Specification 01335 SUBMITTAL PROCEDURES.

3.3.A.5. Control, verification, and acceptance testing procedures for each specific test to include the test name, specification paragraph requiring test, feature of work to be tested, test frequency, and person responsible for each test.

3.3.A.6. Procedures for tracking preparatory, initial, and follow-up control phases and control, verification, and acceptance tests including documentation.

3.3.A.7. Procedures for tracking construction deficiencies from identification through acceptable corrective action. These procedures shall establish verification that identified deficiencies have been corrected.

3.3.A.8. Reporting procedures, including proposed reporting formats.

3.3.A.9. A list of the definable features of work. A definable feature of work is a task which is separate and distinct from other tasks, has separate control requirements, and may be identified by different trades or disciplines, or it may be work by the same trade in a different environment. Although each section of the specifications may generally be considered as a definable feature of work, there are frequently more than one definable features under a particular section. This list will be agreed upon during the coordination meeting.

3.3.B. Additional Requirements for Design Quality Control (DQC) Plan. The following additional requirements apply to the Design Quality Control (DQC) plan:

3.3.B.1. The Contractor shall provide and maintain a Design Quality Control (DQC) Plan as an effective quality control program which will assure that all services required by this design contract are performed and provided in a manner that meets professional architectural and engineering quality standards. As a minimum, all documents shall be technically reviewed by competent, independent reviewers identified in the DQC Plan. The same element that produced the product shall not perform the independent technical review (ITR). The Contractor shall correct errors and deficiencies in the design documents prior to submitting them to the Government.

3.3.B.2. The Contractor shall include the design schedule in the master project schedule, showing the sequence of events involved in carrying out the project design tasks within the specific contract period. This should be at a detailed level of scheduling sufficient to identify all major design tasks, including those that control the flow of work. The schedule shall include review and correction periods associated with each item. This should be a forward planning as well as a project monitoring tool. The schedule reflects calendar days and not dates for each activity. If the schedule is changed, the Contractor shall submit a revised schedule reflecting the change within 7 calendar days. The Contractor shall include in the DQC Plan the discipline-specific checklists to be used during the design and quality control of each submittal. These completed checklists shall be submitted at each design phase as part of the project documentation. Example checklists can be found in ER 1110-1-12.

3.3.B.3. The DQC Plan shall be implemented by a Design Quality Control Manager who has the responsibility of being cognizant of and assuring that all documents on the project have been coordinated. This individual shall be a person who has verifiable engineering or architectural design experience and is a registered professional engineer or architect. The Contractor shall notify the Contracting Officer, in writing, of the name of the individual, and the name of an alternate person assigned to the position.

3.3.C. Acceptance of Plan:

3.3.C.1. The Contracting Officer will notify the Contractor in writing of the acceptance of the DQC Plan. After acceptance, any changes proposed by the Contractor are subject to the acceptance of the Contracting Officer.

3.3.C.2. Acceptance of the Contractor's plan is required prior to the start of construction. Acceptance is conditional and will be predicated on satisfactory performance during the construction. The Government reserves the right to require the Contractor to make changes in the CQC plan and operations including removal of personnel, as necessary, to obtain the quality specified.

3.3.D. Notification of Changes: Notification of Changes. After acceptance of the QC plan, the Contractor shall notify the Contracting Officer in writing a minimum of seven calendar days prior to any proposed change. Proposed changes are subject to acceptance by the Contracting Officer.

3.4. COORDINATION MEETING: After the Pre-construction Conference, before start of construction, and prior to acceptance by the Government of the Quality Control Plan, the Contractor shall meet with the Contracting Officer or Authorized Representative and discuss the Contractor's quality control system. The CQC Plan shall be submitted for review a minimum of 5 calendar days prior to the Coordination Meeting. During the meeting, a mutual understanding of the system details shall be developed, including the forms for recording the CQC operations, control activities, testing, administration of the system for both on-site and off-site work, and the interrelationship of Contractor's Management and control with the Government's Quality Assurance. Minutes of the meeting shall be prepared by the Government and signed by both the Contractor and the Contracting Officer. The minutes shall become a part of the contract file. There may be occasions when subsequent conferences will be called by either party to reconfirm mutual understandings and/or address deficiencies in the CQC system or procedures, which may require corrective action by the Contractor.

3.5. QUALITY CONTROL ORGANIZATION:

3.5.A. Personnel Requirements: The requirements for the CQC organization are a CQC System Manager, and sufficient number of additional qualified personnel to ensure safety and contract compliance. Personnel identified in the technical provisions as requiring specialized skills to assure the required work is being performed properly will also be included as part of the CQC organization. The Contractor's CQC staff shall maintain a presence at the site at all times during progress of the work and have complete authority and responsibility to take any action necessary to ensure contract compliance. The CQC staff shall be subject to acceptance by the Contracting Officer. The Contractor shall provide adequate office space, filing systems and other resources as necessary to maintain an effective and fully functional CQC organization. Complete records of all letters, material submittals, shop drawing submittals, schedules and all other project documentation shall be promptly furnished to the CQC organization by the Contractor. The CQC organization shall be responsible to maintain these documents and records at the site at all times, except as otherwise acceptable to the Contracting Officer.

3.5.B. CQC System Manager: The Contractor shall identify an individual within his organization at the site of the work who shall be responsible for overall management of the CQC and have the authority to act in all CQC matters for the Contractor. The CQC system manager shall be a graduate engineer, graduate architect, or a graduate construction manager, with experience on construction projects similar in type to this contract OR a construction person with a minimum of ten (10) years in related work. The CQC System Manager shall be on the site at all times during construction and shall be employed by the Contractor. The CQC System Manager shall be assigned no other duties. An alternate for the CQC System Manager will be identified in the plan to serve in the event of the CQC system manager's absence. The requirements for the alternate will be the same as for the designated CQC manager.

3.5.C. CQC Personnel: In addition to CQC personnel specified elsewhere in the contract, the Contractor shall provide as part of the CQC organization specialized personnel to assist the CQC System Manager for the following areas: electrical, mechanical, civil, structural, environmental, architectural, materials technician, and submittals clerk. These individuals shall be directly employed by the prime Contractor and may not be employed by a supplier or sub-Contractor on this project; be responsible to the CQC System Manager; be physically present at the construction site during work on their areas of responsibility; have the necessary education and/or experience in accordance with the experience matrix listed herein. These individuals may perform other duties but must be allowed sufficient time to perform their assigned quality control duties as described in the Quality Control Plan.

Experience Matrix		
	Area:	**Qualifications:**
a.	Civil	Graduate Civil Engineer with2 years experience in the type of work being performed on this project or technician with 5 yrs related experience
b.	Mechanical	Graduate Mechanical Engineer with 2 yrs experience or person with 5 yrs related experience
c.	Electrical	Graduate Electrical Engineer with 2 yrs related experience or person with 5 yrs related experience
d.	Structural	Graduate Structural Engineer with 2 yrs experience or person with5 yrs related experience
e.	Architectural	Graduate Architect with 2 yrs experience or person with 5 yrs related experience
f.	Environmental	Graduate Environmental Engineer with 3 yrs experience
g.	Submittals	Submittal Clerk with 1 yr experience
h.	Occupied family housing	Person, customer relations type, coordinator experience
i.	Concrete, Pavements and Soils	Materials Technician with 2 yrs experience for the appropriate area

j.	Testing, Adjusting and Balancing(TAB) Personnel	Specialist must be a member of AABC or an experienced technician of the firm certified by the NEBB.
k.	Design Quality Control Manager	Registered Architect or Professional Engineer

3.5.D. Additional Requirements: In addition to the above experience and/or education requirements, the CQC System Manager shall have completed the course entitled "Construction Quality Management For Contractors". This course is periodically offered by the government, and inquiries as to the next course offering may be directed to the local construction field office.

3.5.E. Organizational Changes: The Contractor shall maintain the CQC staff at full strength at all times. When it is necessary to make changes to the CQC staff, the Contractor shall revise the CQC Plan to reflect the changes and submit the changes to the Contracting Officer for acceptance.

3.6. SUBMITTALS AND DELIVERABLES: Submittals, if needed, shall be made as specified in the STR titled SUBMITTAL PROCEDURES. The CQC organization shall be responsible for certifying that all submittals and deliverables are in compliance with the contract requirements.

3.7. CONTROL: Contractor Quality Control is the means by which the Contractor ensures that the construction, to include that of subcontractors and suppliers, complies with the requirements of the contract. At least three phases of control shall be conducted by the CQC System Manager for each definable feature of the construction work as follows:

3.7.A. Preparatory Phase: This phase shall be performed prior to beginning work on each definable feature of work, after all required documents and materials are approved/accepted, and after copies are at the work site. This phase shall include:

3.7.A.1. A review of each paragraph of applicable specifications, reference codes, and standards. A copy of those sections of referenced codes and standards, in the English language unless specifically approved otherwise by the Contracting Officer, applicable to that portion of the work to be accomplished in the field shall be made available by the Contractor at the preparatory inspection. These copies shall be maintained in the field and available for use by Government personnel until final acceptance of the work.

3.7.A.2. A review of the contract drawings.

3.7.A.3. A check to assure that all materials and/or equipment have been tested, submitted, and approved.

3.7.A.4. A check to assure that provisions have been made to provide required control inspection and testing.

3.7.A.5. Examination of the work area to assure that all required preliminary work has been completed and is in compliance with the contract.

3.7.A.6. A physical examination of required materials, equipment, and sample work to verify that they are on hand, conform to approved shop drawings or submitted data, and are properly stored.

3.7.A.7. Reviews of the appropriate activity hazard analysis to ensure safety requirements are met.

3.7.A.8. Discussion of procedures for constructing the work including repetitive deficiencies, construction tolerances and workmanship standards for that feature of work.

3.7.A.9. A check to ensure that the Contracting Officer has accepted the portion of the plan for the work to be performed.

3.7.A.10. Discussion of the initial control phase.

3.7.A.11. The Government shall be notified at least 24 hours in advance of beginning any of the required action of the preparatory phase. This phase shall include a meeting conducted by the CQC system manager and attended by the superintendent, other CQC personnel (as applicable), and the foreman responsible for the definable feature. The results of the preparatory phase actions shall be documented

by separate minutes prepared by the CQC system manager and attached to the daily QC report. The Contractor shall instruct applicable workers as to the acceptable level of workmanship required in order to meet contract specifications.

3.7.B. Initial Phase: This phase shall be accomplished at the beginning of a definable feature of work. The following shall be accomplished:

3.7.B.1. A check of preliminary work to ensure that it is in compliance with contract requirements. Review minutes of the preparatory meeting.

3.7.B.2. Verification of full contract compliance. Verify required control inspection and testing.

3.7.B.3. Establish level of workmanship and verify that it meets minimum acceptable workmanship standards. Compare with sample panels as appropriate.

3.7.B.4. Resolve all differences.

3.7.B.5. Check safety to include compliance with and upgrading of the safety plan and activity hazard analysis. Review the activity analysis with each worker.

3.7.B.6. The Government shall be notified at least 24 hours in advance of beginning the initial phase. Separate minutes of this phase shall be prepared by the CQC system manager and attached to the daily QC report. Exact location of initial phase shall be indicated for future reference and comparison with follow-up phases.

3.7.B.7. The initial phase should be repeated for each new crew to work on-site, or any time acceptable specified quality standards are not being met.

3.7.C. Follow-up Phase: Daily checks shall be performed to assure continuing compliance with contract requirements, including control testing, until completion of the particular feature of work. The checks shall be made a matter of record in the CQC documentation. Final follow-up checks shall be conducted, and all noted deficiencies corrected, prior to the start of additional features of work that may be affected by the deficient work. The Contractor shall not build upon nor conceal non-conforming work.

3.7.D. Additional Preparatory and Initial Phases: Additional preparatory and initial phases may be required by the Contracting Officer on the same definable features of work if the quality of on-going work is unacceptable; if there are changes in the applicable QC staff or in the on-site production supervision or work crew; if work on a definable feature is resumed after a substantial period of inactivity; or if other problems develop.

3.8. TESTS:

3.8.A. Testing Procedure: The Contractor shall perform tests specified or required to verify that control measures are adequate to provide a product that conforms to contract requirements. Upon request, the Contractor shall furnish to the Government duplicate samples of test specimens for possible testing by the Government. Costs incidental to the transportation of samples or materials shall be borne by the Contractor. Testing includes operation and/or acceptance tests when specified. A list of tests to be performed shall be furnished as a part of the CQC plan. The list shall give the test name, frequency, specification paragraph containing the test requirements, the personnel and laboratory responsible for each type of test, and an estimate of the number of tests required. The Contractor shall perform the following activities and record and provide the following data:

3.8.A.1. Verify that testing procedures comply with contract requirements.

3.8.A.2. Verify that facilities and testing equipment are available and comply with testing standards.

3.8.A.3. Check test instrument calibration data against certified standards.

3.8.A.4. Verify that recording forms and test identification control number system, including all of the test documentation requirements, have been prepared.

3.8.A.5. Results of all tests taken, both passing and failing tests, shall be recorded on the Quality Control report for the date taken. Specification paragraph/item reference, location where tests were taken, and the sequential control number identifying the test will be given. Actual test reports may be submitted later, if approved by the Contracting Officer, with a reference to the test number and date taken. An information copy of tests performed by an off-site or commercial test facility will be provided directly to

the Contracting Officer. Failure to submit timely test reports, as stated, may result in nonpayment for related work performed and disapproval of the test facility for this contract.

3.8.B. Testing Laboratories:

3.8.B.1. Capability Check: - The Government reserves the right to check laboratory equipment in the proposed laboratory for compliance with the standards set forth in the contract specifications and to check the laboratory technician's testing procedures and techniques. Laboratories utilized for testing soils, concrete, asphalt, and steel shall meet criteria detailed in ASTM D 3740 and ASTM E 329.

3.8.B.2. Capability Recheck: - If the selected laboratory fails the capability check, the Contractor will be assessed a charge of $1000 to reimburse the Government for each succeeding recheck of the laboratory or the checking of a subsequently selected laboratory. Such costs will be deducted from the contract amount due the Contractor.

3.8.B.3. Onsite Laboratory: - The Government reserves the right to utilize the Contractor's control testing laboratory and equipment to make assurance tests, and to check the Contractor's testing procedures, techniques, and test results at no additional cost to the Government.

3.8.B.4. Furnishing or Transportation of Samples for Testing: - Costs incidental to the transportation of samples or materials shall be borne by the Contractor. Coordination for each specific test, exact delivery location, and dates will be made through the Area Office. Samples of materials for test verification and acceptance testing by the Government shall be delivered to the Corps of Engineers Division Laboratory, f.o.b., at the following address:

For delivery by mail:
US Army Corps of Engineers
Afghanistan Engineer District (AED)
Attn.: Qalaa House
APO AE 09356

For other deliveries:
U.S. Army Corps of Engineers
House # 1 , St. # 1 West
West Wazir Akbar Khan
Behind Amani High School
Kabul, Afghanistan

3.9. COMPLETION INSPECTION:

3.9.A. Punch-Out Inspection: Near the end of the work, or any increment of the work established by a time stated in the SPECIAL CONTRACT REQUIREMENTS Clause, "Commencement, Prosecution, and Completion of Work", or by the specifications, the CQC Manager shall conduct an inspection of the work. A punch list of items which do not conform to the approved drawings and specifications shall be prepared and included in the CQC documentation, as required by paragraph DOCUMENTATION. The list of deficiencies shall include the estimated date by which the deficiencies will be corrected. The CQC System Manager or staff shall make a second inspection to ascertain that all deficiencies have been corrected. Once this is accomplished, the Contractor shall notify the Government that the facility is ready for the Government Pre-Final inspection.

3.9.B. Pre-Final Inspection: The Government will perform the pre-final inspection to verify that the facility is complete and ready to be occupied. A Government Pre-Final Punch List may be developed as a result of this inspection. The Contractor's CQC System Manager shall ensure that all items on this list have been corrected before notifying the Government, so that a Final inspection with the customer can be scheduled. Any items noted on the Pre-Final inspection shall be corrected in a timely manner. These inspections and any deficiency corrections required by this paragraph shall be accomplished within the time slated for

completion of the entire work or any particular increment of the work if the project is divided into increments by separate completion dates.

3.9.C. Final Acceptance Inspection: The Contractor's Quality Control Inspection personnel, plus the superintendent or other primary management person, and the Contracting Officer's Representative shall be in attendance at the final acceptance inspection. Additional Government personnel including, but not limited to, those from Base/Post Civil Facility Engineer user groups, and major commands may also be in attendance. The final acceptance inspection will be formally scheduled by the Contracting Officer based upon results of the Pre-Final inspection. Notice shall be given to the Contracting Officer at least 14 days prior to the final acceptance inspection and shall include the Contractor's assurance that all specific items previously identified to the Contractor as being unacceptable, along with all remaining work performed under the contract, will be complete and acceptable by the date scheduled for the final acceptance inspection. Failure of the Contractor to have all contract work acceptably complete for this inspection will be cause for the Contracting Officer to bill the Contractor for the Government's additional inspection cost in accordance with the contract clause titled "Inspection of Construction".

3.10. DOCUMENTATION: The Contractor shall maintain current records providing factual evidence that required quality control activities and/or tests have been performed.

3.10.A. These records shall include the work of subcontractors and suppliers and shall be on an acceptable form that includes, as a minimum, the following information:

3.10.A.1. Contractor/subcontractor and their area of responsibility.

3.10.A.2. Operating plant/equipment with hours worked, idle, or down for repair.

3.10.A.3. Work performed each day, giving location, description, and by whom. When Network Analysis (NAS) is used, identify each phase of work performed each day by NAS activity number.

3.10.A.4. Test and/or control activities performed with results and references to specifications/drawings requirements. The control phase shall be identified (Preparatory, Initial, Follow-up). List of deficiencies noted, along with corrective action.

3.10.A.5. Quantity of materials received at the site with statement as to acceptability, storage, and reference to specifications/drawings requirements.

3.10.A.6. Submittals and deliverables reviewed, with contract reference, by whom, and action taken.

3.10.A.7. Offsite surveillance activities, including actions taken.

3.10.A.8. Job safety evaluations stating what was checked, results, and instructions or corrective actions.

3.10.A.9. Instructions given/received and conflicts in plans and/or specifications.

3.10.A.10. Contractor's verification statement.

3.10.B. These records shall indicate a description of trades working on the project; the number of personnel working; weather conditions encountered; and any delays encountered. These records shall cover both conforming and deficient features and shall include a statement that equipment and materials incorporated in the work and workmanship comply with the contract. The original and one copy of these records in report form shall be furnished to the Government daily within forty-eight (48) hours after the date covered by the report, except that reports need not be submitted for days on which no work is performed. As a minimum, one report shall be prepared and submitted for every 7 days of no work and on the last day of a no work period. All calendar days shall be accounted for throughout the life of the contract. The first report following a day of no work shall be for that day only. Reports shall be signed and dated by the CQC System Manager. The report from the CQC System Manager shall include copies of test reports and copies of reports prepared by all subordinate quality control personnel.

3.11. SAMPLE FORMS: In accordance with Specification 01312 QUALITY CONTROL SYSTEM, the contractor shall use the forms produced by and printed from QCS. Samples of any forms required to meet the requirements of this section which are not produced by that system shall be included in the contractors Quality Control Plan.

3.12. NOTIFICATION OF NONCOMPLIANCE: The Contracting Officer will notify the Contractor of any detected noncompliance with the foregoing requirements. The Contractor shall take immediate corrective action

after receipt of such notice. Such notice, when delivered to the Contractor at the work site, shall be deemed sufficient for the purpose of notification. If the Contractor fails or refuses to comply promptly, the Contracting Officer may issue an order stopping all or part of the work until satisfactory corrective action has been taken. No part of the time lost due to such stop orders shall be made the subject of claim for extension of time or for excess costs or damages by the Contractor.

-- End Section --

SECTION 01525 SAFETY AND OCCUPATIONAL HEALTH REQUIREMENTS

PART 1 GENERAL

For contractor safety on projects associated with this program, compliance with EM 385-1-1 safety requirements will be the long-term goal reached by growing a safety culture. This compliance will, by necessity, be achieved through a phased-in process. In the Commander's letter at the preface of the EM 385-1-1, he acknowledges that in OCONUS locations, strict compliance with the manual may not be possible – and through the hazard analysis process, safety measures can be developed to attain the same degree of safety.

This specification consists of two parts:

1) Sections 1.1 through 3.12.1, which are the standard safety specifications for work in Europe District and;

2) Appendix A, Phasing approach for safety in emerging countries where there is little or no national safety standards.

1.1 REFERENCES

The publications listed below form a part of this specification to the extent referenced. The publications are referred to within the text by the basic designation only.

AMERICAN NATIONAL STANDARDS INSTITUTE (ANSI)

ANSI A10.32	Personal Fall Protection - Safety Requirements for Construction and Demolition Operations
ANSI Z359.1(1992; R 1999)	Safety Requirements for Personal Fall Arrest Systems, Subsystems and Components
ANSI/ASSE A10.34(2001)	Protection of the Public on or Adjacent to Construction Sites
ASME B30.3(1996)	Construction Tower Cranes

ASME INTERNATIONAL (ASME)

ASME B30.22(2000)	Articulating Boom Cranes
ASME B30.5(2004)	Mobile and Locomotive Cranes

NATIONAL FIRE PROTECTION ASSOCIATION (NFPA)

NFPA 10(2002)	Portable Fire Extinguishers
NFPA 241(2000)	Safeguarding Construction, Alteration, and Demolition Operations
NFPA 51B(2003)	Fire Prevention During Welding, Cutting, and Other Hot Work
NFPA 70(2005)	National Electrical Code
NFPA 70E(2004)	Electrical Safety in the Workplace

U.S. ARMY CORPS OF ENGINEERS (USACE)

EM 385-1-1(2003) Safety	Safety and Health Requirements

U.S. NATIONAL ARCHIVES AND RECORDS ADMINISTRATION (NARA)

29 CFR 1910	Occupational Safety and Health Standards (OSHA)
29 CFR 1910.146	Permit-required Confined Spaces
29 CFR 1915	Confined and Enclosed Spaces and Other Dangerous Atmospheres in Shipyard Employment
29 CFR 1919	Gear Certification
29 CFR 1926	Safety and Health Regulations for Construction
29 CFR 1926.500	Fall Protection

1.2 SUBMITTALS

Government approval is required for submittals with a "G" designation; submittals not having a "G" designation are for information only. When used, a designation following the "G" designation identifies the office that will review the submittal for the Government. The following shall be submitted in accordance with SR SUBMITTAL PROCEDURES:

SD-01 Preconstruction Submittals

Accident Prevention Plan (APP); G, ACC

Activity Hazard Analysis (AHA); G, ACC

Crane Critical Lift Plan; G, ACC

Proof of qualification for Crane Operators; G, ACC

SD-06 Test Reports

Reports: Submit reports as their incidence occurs, in accordance with the requirements of the paragraph entitled, "Reports."

Accident Reports

Monthly Exposure Reports

Crane Reports

Regulatory Citations and Violations

SD-07 Certificates

Confined Space Entry Permit

Contractor Safety Self-Evaluation Checklist; G, ACC

Submit one copy of each permit/certificate attached to each Daily Quality Control Report.

1.3 DEFINITIONS

a. Competent Person for Fall Protection. A person who is capable of identifying hazardous or dangerous conditions in the personal fall arrest system or any component thereof, as well as their application and use with related equipment, and has the authority to take prompt corrective measures to eliminate the hazards of falling.

b. High Visibility Accident. Any mishap which may generate publicity and/or high visibility.

c. Medical Treatment. Treatment administered by a physician or by registered professional personnel under the standing orders of a physician. Medical treatment does not include first aid treatment even through provided by a physician or registered personnel.

d. Qualified Person for Fall Protection. A person with a recognized degree or professional certificate, extensive knowledge, training and experience in the field of fall protection who is capable of performing design, analysis, and evaluation of fall protection systems and equipment.

e. Recordable Injuries or Illnesses. Any work-related injury or illness that results in:

(1) Death, regardless of the time between the injury and death, or the length of the illness;

(2) Days away from work (any time lost after day of injury/illness onset);

(3) Restricted work;

(4) Transfer to another job;

(5) Medical treatment beyond first aid;

(6) Loss of consciousness; or

(7) A significant injury or illness diagnosed by a physician or other licensed health care professional, even if it did not result in (1) through (6) above.

f. "USACE" property and equipment specified in USACE EM 385-1-1 should be interpreted as Government property and equipment.

1.4 DRUG PREVENTION PROGRAM

Conduct a proactive drug and alcohol use prevention program for all workers, prime and subcontractor, on the site. Ensure that no employee uses illegal drugs or consumes alcohol during work hours. Ensure there are no employees under the influence of drugs or alcohol during work hours. After accidents, collect blood, urine, or saliva specimens and test the injured and involved employees for the influence of drugs and alcohol. A copy of the test shall be made available to the Contracting Officer upon request.

1.5 REGULATORY REQUIREMENTS

In addition to the detailed requirements included in the provisions of this contract, work performed shall comply with USACE EM 385-1-1, and in particular, the requirements of the European Union Council Directive 92/57/EEC of 24 June 1992 on the implementation of minimum safety and health requirements at temporary or mobile construction sites. Submit matters of interpretation of standards to the appropriate administrative agency for resolution before starting work. Where the requirements of this specification, applicable laws, criteria, ordinances, regulations, and referenced documents vary, the most stringent requirements shall apply.

1.6 SITE QUALIFICATIONS, DUTIES AND MEETINGS

1.6.1 Personnel Qualifications

1.6.1.1 Site Safety and Health Officer (SSHO)

Site Safety and Health Officer (SSHO) shall be provided at the work site at all times to perform safety and occupational health management, surveillance, inspections, and safety enforcement for the Contractor. The Contractor Quality Control (QC) person can only be the SSHO on this project if approved by the Contracting Officer. Any project exceeding 1 Million US dollars in value shall have a full time SSHO. The SSHO shall meet the following requirements: A minimum of 5 years safety work on similar projects; 30-hour OSHA construction safety class or European Union equivalent within the last 5 years; an average of at least 24 hours of formal safety training each year for the past 5 years. Competent person training as needed.

1.6.1.2 Competent Person for Confined Space Entry

Provide a competent person meeting the requirements of EM 385-1-1 who is assigned in writing by the Government Designated Authority (GDA) to assess confined spaces and who possesses demonstrated knowledge, skill and ability to:

a. Identify the structure, location, and designation of confined and permit-required confined spaces where work is done;

b. Calibrate and use testing equipment including but not limited to, oxygen indicators, combustible gas indicators, carbon monoxide indicators, and carbon dioxide indicators, and to interpret accurately the test results of that equipment;

c. Perform all required tests and inspections specified in Section 06.I of EM 385-1-1;

d. Assess hazardous conditions including atmospheric hazards in confined space and adjacent spaces and specify the necessary protection and precautions to be taken;

e. Determine ventilation requirements for confined space entries and operations;

f. Assess hazards associated with hot work in confined and adjacent space and determine fire watch requirements; and,

g. Maintain records required.

1.6.1.3 Crane Operators

Crane operators shall meet the requirements in USACE EM 385-1-1, Section 16 and Appendix G. In addition, crane operators shall be designated as qualified by a source that qualifies crane operators (i.e., union, a government agency, or and organization that tests and qualifies crane operators). Proof of current qualification shall be provided.

1.6.2 Personnel Duties

1.6.2.1 Site Safety and Health Officer (SSHO)/Superintendent

a. Conduct daily safety and health inspections and maintain a written log which includes area/operation inspected, date of inspection, identified hazards, recommended corrective actions, estimated and actual dates of corrections. Safety inspection logs shall be attached to the Contractors' daily quality control report.

b. Conduct mishap investigations and complete required reports. Maintain an accident/injury log such as the OSHA Form 300 or host nation equivalent, and Daily Production reports for prime and sub-contractors.

c. Maintain applicable safety reference material on the job site.

d. Attend the pre-construction conference, pre-work meetings including preparatory inspection meeting, and periodic in-progress meetings.

e. Implement and enforce accepted APPS and AHAs.

f. Maintain a safety and health deficiency tracking system that monitors outstanding deficiencies until resolution. A list of unresolved safety and health deficiencies shall be posted on the safety bulletin board.

g. Ensure sub-contractor compliance with safety and health requirements.

Failure to perform the above duties will result in dismissal of the superintendent and/or SSHO, and a project work stoppage. The project work stoppage will remain in effect pending approval of a suitable replacement.

1.6.3 Meetings

1.6.3.1 Preconstruction Conference

a. Contractor representatives who have a responsibility or significant role in accident prevention on the project shall attend the preconstruction conference. This includes the project superintendent, site safety and health officer, quality control supervisor, or any other assigned safety and health professionals who participated in the development of the APP (including the Activity Hazard Analyses (AHAs) and special plans, program and procedures associated with it).

b. The Contractor shall discuss the details of the submitted APP to include incorporated plans, programs, procedures and a listing of anticipated AHAs that will be developed and implemented during the performance of the contract. This list of proposed AHAs will be reviewed at the conference and an agreement will be reached between the Contractor and the Contracting Officer's representative as to which phases will require an analysis. In addition, a schedule for the preparation, submittal, review, and acceptance of AHAs shall be established to preclude project delays.

c. Deficiencies in the submitted APP will be brought to the attention of the Contractor at the preconstruction conference, and the Contractor shall revise the plan to correct deficiencies and re-submit it for acceptance. Work shall not begin until there is an accepted APP.

d. The functions of a Preconstruction conference may take place at the Post-Award Kickoff meeting for Design Build Contracts.

1.6.3.2 Safety Meetings

Shall be conducted and documented as required by EM 385-1-1. Minutes showing contract title, signatures of attendees and a list of topics discussed shall be attached to the Contractors' daily quality control report.

1.7 TRAINING

1.7.1 New Employee Indoctrination

New employees (prime and sub-contractor) will be informed of specific site hazards before they begin work. Documentation of this orientation shall be kept on file at the project site.

1.7.2 Periodic Training

Provide Safety and Health Training in accordance with USACE EM 385-1-1 and the accepted APP. Ensure all required training has been accomplished for all onsite employees.

1.7.3 Training on Activity Hazard Analysis (AHA)

Prior to beginning a new phase, training will be provided to all affected

1.8 ACCIDENT PREVENTION PLAN (APP)

The Contractor shall use a qualified person to prepare the written site-specific APP in both English and in the host nation language. Prepare the APP in accordance with the format and requirements of USACE EM 385-1-1 and as supplemented herein. Cover all paragraph and subparagraph elements in USACE EM 385-1-1, Appendix A, "Minimum Basic Outline for Accident Prevention Plan". Specific requirements for some of the APP elements are described below. The APP shall be job-specific and shall address any unusual or unique aspects of the project or activity for which it is written. The APP shall interface with the Contractor's overall safety and health program. Any portions of the Contractor's overall safety and health program referenced in the APP shall be included in the applicable APP element and made site-specific. The Government considers the Prime Contractor to be the "controlling authority" for all work site safety and health of the subcontractors. Contractors are responsible for informing their subcontractors of the safety provisions under the terms of the contract and the penalties for noncompliance, coordinating the work to prevent one craft from interfering with or creating hazardous working conditions for other crafts, and inspecting subcontractor operations to ensure that accident prevention responsibilities are being carried out. The APP shall be signed by the person and firm (senior person) preparing the APP, the Contractor, the on-site superintendent, the designated site safety and health officer.

Submit the APP to the Contracting Officer 15 calendar days prior to the date of the preconstruction conference for acceptance. Work cannot proceed without an accepted APP.

Once accepted by the Contracting Officer, the APP and attachments will be enforced as part of the contract. Disregarding the provisions of this contract or the accepted APP will be cause for stopping of work, at the discretion of the Contracting Officer, until the matter has been rectified.

Once work begins, changes to the accepted APP shall be made with the knowledge and concurrence of the Contracting Officer, project superintendent, SSHO and quality control manager. Should any hazard become evident, stop work in the area, secure the area, and develop a plan to remove the hazard. Notify the Contracting Officer within 24 hours of discovery. In the interim, all necessary action shall be taken to restore and maintain safe working conditions in order to safeguard onsite personnel, visitors, the public, and the environment.

Copies of the accepted plan will be maintained at the Contracting Officer's office and at the job site.

The APP shall be continuously reviewed and amended, as necessary, throughout the life of the contract. Unusual or high-hazard activities not identified in the original APP shall be incorporated in the plan as they are discovered.

1.8.1 EM 385-1-1 Contents

In addition to the requirements outlines in Appendix A of USACE EM 385-1-1, the following is required:

a. Names and qualifications (resumes including education, training, experience and certifications) of all site safety and health personnel designated to perform work on this project to include the designated site safety and health officer and other competent and qualified personnel to be. The duties of each position shall be specified.

b. Qualifications of competent and of qualified persons. As a minimum, competent persons shall be designated and qualifications submitted for each of the following major areas: excavation; scaffolding; fall protection; hazardous energy; confined space; health hazard recognition, evaluation and control of chemical, physical and biological agents; personal protective equipment and clothing to include selection, use and maintenance.

c. Confined Space Entry Plan. Develop a confined space entry plan in accordance with USACE EM 385-1-1, Section 06.I, and any other federal, state and local regulatory requirements identified in this contract. Identify the qualified person's name and qualifications, training, and experience. Delineate the qualified person's authority to direct work stoppage in the event of hazardous conditions. Include procedure for rescue by contractor personnel and the coordination with emergency responders. (If there is no confined space work, include a statement that no confined space work exists and none will be created.)

d. Crane Critical Lift Plan. Prepare and sign weight handling critical lift plans for lifts over 75 percent of the capacity of the crane or hoist (or lifts over 50 percent of the capacity of a barge mounted mobile crane's hoists) at any radius of lift; lifts involving more than one crane or hoist; lifts of personnel; and lifts involving non-routine rigging or operation, sensitive equipment, or unusual safety risks. The plan shall be submitted 15 calendar days prior to on-site work and include the requirements of USACE EM 385-1-1, paragraph 16.C.18. and the following:

(1) For lifts of personnel, the plan shall demonstrate compliance with the requirements of EM 385-1-1, Section 22.F.

(2) For barge mounted mobile cranes, barge stability calculations identifying barge list and trim based on anticipated loading; and load charts based on calculated list and trim. The amount of list and trim shall be within the crane manufacturer's requirements.

e. Fall Protection and Prevention (FP&P) Plan. The plan shall be site specific and address all fall hazards in the work place and during different phases of construction. It shall address how to protect and prevent workers from falling to lower levels when they are exposed to fall hazards above 1.8 m (6 feet). A qualified person for fall protection shall prepare and sign the plan. The plan shall include fall protection and prevention systems, equipment and methods employed for every phase of work, responsibilities, assisted rescue, self-rescue and evacuation procedures, training requirements, and

monitoring methods. Fall Protection and Prevention Plan shall be revised every six months for lengthy projects, reflecting any changes during the course of construction due to changes in personnel, equipment, systems or work habits. The accepted Fall Protection and Prevention Plan shall be kept and maintained at the job site for the duration of the project. The Fall Protection and Prevention Plan shall be included in the Accident Prevention Plan (APP).

1.9 ACTIVITY HAZARD ANALYSIS (AHA)

The Activity Hazard Analysis (AHA) format shall be in accordance with USACE EM 385-1-1, and shall be written in both English and the host nation language. Submit the AHA for review at least 15 calendar days prior to the start of each phase. Format subsequent AHAs as amendments to the APP. The analysis should be used during daily inspections to ensure the implementation and effectiveness of the activity's safety and health controls.

The AHA list will be reviewed periodically (at least monthly) at the Contractor supervisory safety meeting and updated as necessary when procedures, scheduling, or hazards change.

The activity hazard analyses shall be developed using the project schedule as the basis for the activities performed. Any activities listed on the project schedule will require an AHA. The AHAs will be developed by the contractor, supplier or subcontractor and provided to the prime contractor for submittal to the Contracting Officer.

1.10 DISPLAY OF SAFETY INFORMATION

Within 1 calendar day after commencement of work, erect a safety bulletin board at the job site. The safety bulletin board shall include information and be maintained as required by EM 385-1-1, section 01.A.06.

1.11 SITE SAFETY REFERENCE MATERIALS

Maintain safety-related references applicable to the project. Maintain applicable equipment manufacturer's manuals.

1.12 EMERGENCY MEDICAL TREATMENT

Contractors will arrange for their own emergency medical treatment. The Government has no responsibility to provide emergency medical treatment. Military medical clinics may provide emergency treatment for serious injuries; the contractor is responsible for coordination with the local military medical clinic prior to mobilization.

1.13 REPORTS

1.13.1 Accident Reports

For recordable injuries and illnesses, and property damage accidents resulting in at least $2,000 in damages, the Prime Contractor shall conduct an accident investigation to establish the root cause(s) of the accident, complete the USACE Accident Report Form 3394 and provide the report to the Contracting Officer within 5 calendar day(s) of the accident. The Contracting Officer will provide copies of any required or special forms.

1.13.2 Accident Notification

Notify the Contracting Officer as soon as practical, but not later than four hours, after any accident meeting the definition of Recordable Injuries or Illnesses or High Visibility Accidents, property damage equal to or greater than $2,000. Information shall include contractor name; contract title; type of contract; name of activity, installation or location where accident occurred; date and time of accident; names of personnel injured; extent

of property damage, if any; extent of injury, if known, and brief description of accident (to include type of construction equipment used, PPE used, etc.). Preserve the conditions and evidence on the accident site until the Government investigation team arrives on-site and Government investigation is conducted.

1.13.3 Monthly Exposure Reports

Monthly exposure reporting to the Contracting Officer is required to be attached to the monthly billing request. This report is a compilation of employee-hours worked each month for all site workers, both prime and subcontractor. The Contracting Officer will provide copies of any special forms.

1.13.4 Crane Reports

Submit crane inspection reports required in accordance with USACE EM 385-1-1, Appendix H and as specified herein with Daily Reports of Inspections.

1.14 HOT WORK

Prior to performing "Hot Work" (welding, cutting, etc.) or operating other flame-producing/spark producing devices, a written permit shall be requested from the Installation. CONTRACTORS ARE REQUIRED TO MEET ALL CRITERIA BEFORE A PERMIT IS ISSUED. The Contractor will provide at least two (2) six kilogram ABC rated extinguishers for normal "Hot Work". All extinguishers shall be current inspection tagged, approved safety pin and tamper resistant seal. It is also mandatory to have a designated FIRE WATCH for any "Hot Work" done at this activity. The Fire Watch shall be trained in fire fighting techniques and remain on-site for a minimum of 120 minutes after completion of the task or as specified on the hot work permit.

When starting work in the facility, Contractors shall require their personnel to familiarize themselves with the location of the nearest fire alarm boxes and place in memory the emergency phone numbers. ANY FIRE, NO MATTER HOW SMALL, SHALL BE REPORTED TO THE RESPONSIBLE FIRE DIVISION/DEPARTMENT IMMEDIATELY.

PART 2 PRODUCTS

Not used.

PART 3 EXECUTION

3.1 CONSTRUCTION AND/OR OTHER WORK

Before initiation of work at the job site, an accident prevention plan, written by the Contractor for the specific work and hazards of the contract and implementing in detail the pertinent requirements of EM 385-1-1, will be reviewed and found acceptable by designated Government personnel. Specific requirements for development of the accident prevention plan are found in sections 01.A and Appendix A of EM 385-1-1.

Before beginning each activity involving a type of work presenting hazards not experienced in previous project operations or where a new work crew or subcontractor is to perform the work, activity hazard analysis (AHA) shall be prepared by the Contractor performing the work activity. See paragraph 01.A.09 of EM 385-1-1.

The Contractor shall require subcontractors to submit their plan of operations showing methods they propose to use in accomplishing major phases of work.

The Contractor shall be prepared to discuss the plans in conferences convened by the Contracting Officer prior to starting work on each major phase of operation. Plans shall include all pertinent information such as layout

of haul roads, access roads, storage areas, electrical distribution lines, methods of providing minimum exposure to overhead loads, and methods of access to work areas. The plan for accomplishing the initial work phase shall be submitted within 15 calendar days after award of the contract. Plans for subsequent major phases of work shall be submitted not later than 15 calendar days prior to initiation of work on each major phase.

All areas where construction, demolition, alteration, building, or similarly related activities take place, all workers shall have the following minimum personal protective clothing and equipment:

1. Short sleeve shirt.
2. Long trousers.
3. Steel-toed safety boots.
4. Hard hat.

3.1.1 Falling Object Protection

All areas must be barricaded to safeguard employees. When working overhead, barricade the area below to prevent entry by unauthorized employees. Construction warning tape and signs shall be posted so they are clearly visible from all possible access points. When employees are working overhead all tools and equipment shall be secured so that they will not fall. When using guardrail as falling object protection, all openings shall be small enough to prevent passage of potential falling objects.

3.1.2 Hazardous Material Use

Each hazardous material must receive approval prior to being brought onto the job site or prior to any other use in connection with this contract. Allow a minimum of 10 working days for processing of the request for use of a hazardous material. Any work or storage involving hazardous chemicals or materials must be done in a manner that will not expose Government or Contractor employees to any unsafe or unhealthful conditions. Adequate protective measures must be taken to prevent Government or Contractor employees from being exposed to any hazardous condition that could result from the work or storage. The Prime Contractor shall keep a complete inventory of hazardous materials brought onto the work-site. Approval by the Contracting Officer of protective measures and storage area is required prior to the start of the work.

3.1.3 Hazardous Material Exclusions

Notwithstanding any other hazardous material used in this contract, radioactive materials or instruments capable of producing ionizing/non-ionizing radiation (with the exception of radioactive material and devices used in accordance with USACE EM 385-1-1 such as nuclear density meters for compaction testing and laboratory equipment with radioactive sources) as well as materials which contain asbestos, mercury or polychlorinated biphenyls, di-isocynates, lead-based paint are prohibited. The Contracting Officer, upon written request by the Contractor, may consider exceptions to the use of any of the above excluded materials.

3.1.4 Unforeseen Hazardous Material

The design should have identified materials such as PCB, lead paint, and friable and non-friable asbestos. If material, not indicated, that may be hazardous to human health upon disturbance during construction operations is encountered, stop that portion of work and notify the Contracting Officer immediately. Within 14 calendar days the Government will determine if the material is hazardous. If material is not hazardous or poses no danger, the Government will direct the Contractor to proceed without change. If material is hazardous and handling of the material is necessary to accomplish the work, the Government will issue a modification pursuant to "FAR 52.243-4, Changes" and "FAR 52.236-2, Differing Site Conditions."

3.2 FALL HAZARD PROTECTION AND PREVENTION PROGRAM

The Contractor shall establish a fall protection and prevention program, for the protection of all employees exposed to fall hazards. The program shall include company policy, identify responsibilities, education and

training requirements, fall hazard identification, prevention and control measures, inspection, storage, care and maintenance of fall protection equipment and rescue and evacuation procedures.

3.2.1 Training

The Contractor shall institute a fall protection training program. As part of the Fall Hazard Protection and Prevention Program, the Contractor shall provide training for each employee who might be exposed to fall hazards. A competent person for fall protection shall provide the training. Training requirements shall be in accordance with USACE EM 385-1-1, section 21.A.16.

3.2.2 Fall Protection Equipment and Systems

The Contractor shall enforce use of the fall protection equipment and systems designated for each specific work activity in the Fall Protection and Prevention Plan and/or AHA at all times when an employee is exposed to a fall hazard. Employees shall be protected from fall hazards as specified in EM 385-1-1, section 21. In addition to the required fall protection systems, safety skiff, personal floatation devices, life rings etc., are required when working above or next to water in accordance with USACE EM 385-1-1, paragraphs 05.H. and 05.I. Personal fall arrest systems are required when working from an articulating or extendible boom, swing stages, or suspended platform. In addition, personal fall arrest systems are required when operating other equipment such as scissor lifts if the work platform is capable of being positioned outside the wheelbase. The need for tying-off in such equipment is to prevent ejection of the employee from the equipment during raising, lowering, or travel. Fall protection must comply with USACE EM 385-1-1 and host nation requirements, whichever is more stringent.

3.2.2.1 Personal Fall Arrest Equipment

Personal fall arrest equipment, systems, subsystems, and components shall meet ANSI Z359.1 or European Union equivalent. Only a full-body harness with a shock-absorbing lanyard or self-retracting lanyard is an acceptable personal fall arrest body support device. Body belts may only be used as a positioning device system (for uses such as steel reinforcing assembly and in addition to an approved fall arrest system). Harnesses shall have a fall arrest attachment affixed to the body support (usually a Dorsal D-ring) and specifically designated for attachment to the rest of the system. Only locking snap hooks and carabiners shall be used. Webbing, straps, and ropes shall be made of synthetic fiber. The maximum free fall distance when using fall arrest equipment shall not exceed 1.8 m (6 feet). The total fall distance and any swinging of the worker (pendulum-like motion) that can occur during a fall shall always be taken into consideration when attaching a person to a fall arrest system.

3.2.3 Fall Protection for Roofing Work

Fall protection controls shall be implemented based on the type of roof being constructed and work being performed. The roof area to be accessed shall be evaluated for its structural integrity including weight-bearing capabilities for the projected loading.

a. Low Sloped Roofs:

(1) For work within 1.8 m (6 feet) of an edge, on low-slope roofs, personnel shall be protected from falling by use of personal fall arrest systems, guardrails, or safety nets. A safety monitoring system is not adequate fall protection and is not authorized.

(2) For work greater than 1.8 m (6 feet) from an edge, warning lines shall be erected and installed in accordance with USACE EM 385-1-1.

b. Steep-Sloped Roofs: Work on steep-sloped roofs requires a personal fall arrest system, guardrails with toe-boards, or safety nets. This requirement also includes residential or housing type construction.

3.2.4 Existing Anchorage

Existing anchorages, to be used for attachment of personal fall arrest equipment, shall be certified (or re-certified) by a qualified person for fall protection in accordance with ANSI Z359.1 or European Union equivalent. Exiting horizontal lifeline anchorages shall be certified (or re-certified) by a registered professional engineer with experience in designing horizontal lifeline systems.

3.2.5 Horizontal Lifelines

Horizontal lifelines shall be designed, installed, certified and used under the supervision of a qualified person for fall protection as part of a complete fall arrest system which maintains a safety factor of 2.

3.2.6 Guardrails and Safety Nets

Guardrails and safety nets shall be designed, installed and used in accordance with EM 385-1-1 or Host Nation requirements, whichever is more stringent.

3.2.7 Rescue and Evacuation Procedures

When personal fall arrest systems are used, the contractor must ensure that the mishap victim can self-rescue or can be rescued promptly should a fall occur. A Rescue and Evacuation Plan shall be prepared by the contractor and include a detailed discussion of the following: methods of rescue; methods of self-rescue; equipment used; training requirement; specialized training for the rescuers; procedures for requesting rescue and medical assistance; and transportation routes to a medical facility. The Rescue and Evacuation Plan shall be included in the Activity Hazard Analysis (AHA) for the phase of work, in the Fall Protection and Prevention (FP&P) Plan, and the Accident Prevention Plan (APP).

3.3 SCAFFOLDING

Employees shall be provided with a safe means of access to the work area on the scaffold. Climbing of any scaffold braces or supports not specifically designed for access is prohibited. Access to scaffold platforms greater than 6 m in height shall be accessed by use of a scaffold stair system. Vertical ladders commonly provided by scaffold system manufacturers shall not be used for accessing scaffold platforms greater than 6 m in height. The use of an adequate gate is required. Contractor shall ensure that employees are qualified to perform scaffold erection and dismantling. Do not use scaffold without the capability of supporting at least four times the maximum intended load or without appropriate fall protection as delineated in the accepted fall protection and prevention plan. Stationary scaffolds must be attached to structural building components to safeguard against tipping forward or backward. Special care shall be given to ensure scaffold systems are not overloaded. Side brackets used to extend scaffold platforms on self-supported scaffold systems for the storage of material is prohibited. The first tie-in shall be at the height equal to 4 times the width of the smallest dimension of the scaffold base. Work platforms shall be placed on mud sills. Scaffold or work platform erectors shall have fall protection during the erection and dismantling of scaffolding or work platforms that are more than six feet. Delineate fall protection requirements when working above six feet or above dangerous operations in the Fall Protection and Prevention (FP&P) Plan and Activity Hazard Analysis (AHA) for the phase of work.

3.4 EQUIPMENT

3.4.1 Material Handling Equipment

a. Material handling equipment such as forklifts shall not be modified with work platform attachments for supporting employees unless specifically delineated in the manufacturer's printed operating instructions.

b. The use of hooks on equipment for lifting of material must be in accordance with manufacturer's printed instructions.

c. Operators of forklifts or power industrial trucks shall be trained/licensed in accordance with Host Nation requirements.

3.4.2 Weight Handling Equipment

a. Cranes and derricks shall be equipped as specified in EM-385-1-1 section 16.

b. The Contractor shall notify the Contracting Officer 15 days in advance of any cranes entering the activity so that necessary quality assurance spot checks can be coordinated. Contractor's operator shall remain with the crane during the spot check.

c. The Contractor shall comply with the crane manufacturer's specifications and limitations for erection and operation of cranes and hoists used in support of the work. Erection shall be performed under the supervision of a designated person. All testing shall be performed in accordance with the manufacturer's recommended procedures.

d. Under no circumstance shall a Contractor make a lift at or above 90% of the cranes rated capacity in any configuration.

e. When operating in the vicinity of overhead transmission lines, operators and riggers shall be alert to this special hazard and shall follow the requirements of USACE EM 385-1-1 section 11.

f. Crane suspended personnel work platforms (baskets) shall not be used unless the Contractor proves to the satisfaction of the Contracting Officer that using any other access to the work location would provide a greater hazard to the workers or is impossible. Personnel shall not be lifted with a line hoist or friction crane.

g. Portable fire extinguishers shall be inspected, maintained, and recharged.

h. All employees shall be kept clear of loads about to be lifted and of suspended loads.

i. The Contractor shall use cribbing when performing lifts on outriggers.

j. The crane hook/block must be positioned directly over the load. Side loading of the crane is prohibited.

k. A physical barricade must be positioned to prevent personnel from entering the counterweight swing (tail swing) area of the crane.

l. Certification records which include the date of inspection, signature of the person performing the inspection, and the serial number or other identifier of the crane that was inspected shall always be available for review by Contracting Officer personnel.

m. Written reports listing the load test procedures used along with any repairs or alterations performed on the crane shall be available for review by Contracting Officer personnel.

n. Certify that all crane operators have been trained in proper use of all safety devices (e.g. anti-two block devices).

o. Take steps to ensure that wind speed does not contribute to loss of control of the load during lifting operations. Prior to conducting lifting operations the contractor shall set a maximum wind speed at which a crane can be safely operated based on the equipment being used, the load being lifted, experience of operators and riggers, and hazards on the work site. This maximum wind speed determination shall be included as part of the activity hazard analysis plan for that operation.

3.5 EXCAVATIONS

The competent person for excavations performed as a result of contract work shall be on-site when excavation work is being performed, and shall inspect, and document the excavations daily prior to entry by workers. The competent person must evaluate all hazards, including atmospheric, that may be associated with the work, and shall have the resources necessary to correct hazards promptly.

3.5.1 Utility Locations

Prior to any excavation, all underground utilities in the work area must be positively identified by the contractor utilizing a) a private utility locating service in addition to any station locating service, and/or b) a metal and/or cable-detecting device along the route of the excavation. All underground utilities discovered will be flagged a distance of one-half (1/2) meter on each side of the location, and any markings made during the utility investigation must be maintained throughout the contract.

Damage occurring to existing utilities, when the above procedures are not followed, will be repaired at the Contractor's expense.

3.5.2 Utility Location Verification

The Contractor must physically verify underground utility locations by hand digging using wood or fiberglass handled tools when any adjacent construction work is expected to come within three feet of the underground system. Digging within 0.61 m (2 feet) of a known utility must not be performed by means of mechanical equipment; hand digging shall be used. If construction is parallel to an existing utility the utility shall be exposed by hand digging every 30.5 m (100 feet) if parallel within 1.5 m (5 feet) of the excavation.

3.5.3 Shoring Systems

Trench and shoring systems must be identified in the accepted safety plan and AHA. Manufacture tabulated data and specifications or registered engineer tabulated data for shoring or benching systems shall be readily available on-site for review. Job-made shoring or shielding shall have the registered professional engineer stamp, specifications, and tabulated data. Extreme care must be used when excavating near direct burial electric underground cables.

3.5.4 Trenching Machinery

Trenching machines with digging chain drives shall be operated only when the spotters/laborers are in plain view of the operator. Operator and spotters/laborers shall be provided training on the hazards of the digging chain drives with emphasis on the distance that needs to be maintained when the digging chain is operating. Documentation of the training shall be kept on file at the project site.

3.6 UTILITIES WITHIN CONCRETE SLABS

Utilities located within concrete slabs or pier structures, bridges, and the like, are extremely difficult to identify due to the reinforcing steel used in the construction of these structures. Whenever contract work involves concrete chipping, saw cutting, or core drilling, the existing utility location must be coordinated with station utility departments in addition to a private locating service. Outages to isolate utility systems shall be used in circumstances where utilities are unable to be positively identified. The use of historical drawings does not alleviate the contractor from meeting this requirement.

3.7 ELECTRICAL

3.7.1 Conduct of Electrical Work

Underground electrical spaces must be certified safe for entry before entering to conduct work. Cables that will be cut must be positively identified and de-energized prior to performing each cut. Positive cable identification must be made prior to submitting any outage request for electrical systems. Arrangements are to be coordinated with the Contracting Officer and Station Utilities for identification. The Contracting Officer will not accept an outage request until the Contractor satisfactorily documents that the circuits have been clearly identified. Perform all high voltage cable cutting remotely using hydraulic cutting tool. When racking in or live switching of circuit breakers, no additional person other than the switch operator will be allowed in the space during the actual operation. Plan so that work near energized parts is minimized to the fullest extent possible. Use of electrical outages clear of any energized electrical sources is the preferred method. When working in energized substations, only qualified electrical workers shall be permitted to enter. When work requires Contractor to work near energized circuits as defined by the NFPA 70, high voltage personnel must use personal protective equipment that includes, as a minimum, electrical hard hat, safety shoes, insulating gloves with leather protective sleeves, fire retarding shirts, coveralls, face shields, and safety glasses. In addition, provide electrical arc flash protection for personnel as required by NFPA 70E. Insulating blankets, hearing protection, and switching suits may also be required, depending on the specific job and as delineated in the Contractor's AHA.

3.7.2 Portable Extension Cords

Portable extension cords shall be sized in accordance with manufacturer ratings for the tool to be powered and protected from damage. All damaged extension cords shall be immediately removed from service. Portable extension cords shall meet the requirements of NFPA 70 or European Union equivalent.

3.8 WORK IN CONFINED SPACES

The Contractor shall comply with the requirements in Section 06.I of USACE EM 385-1-1. Any potential for a hazard in the confined space requires a permit system to be used.

a. Entry Procedures. Prohibit entry into a confined space by personnel for any purpose, including hot work, until the qualified person has conducted appropriate tests to ensure the confined or enclosed space is safe for the work intended and that all potential hazards are controlled or eliminated and documented. (See Section 06.I.06 of USACE EM 385-1-1 for entry procedures). All hazards pertaining to the space shall be reviewed with each employee during review of the AHA.

b. Forced air ventilation is required for all confined space entry operations and the minimum air exchange requirements must be maintained to ensure exposure to any hazardous atmosphere is kept below its' action level.

c. Ensure the use of rescue and retrieval devices in confined spaces greater than 1.5 m (5 feet) in depth. Conform to Sections 06.I.08, 06.I.09 and 06.I.10 of USACE EM 385-1-1.

d. Sewer wet wells require continuous atmosphere monitoring with audible alarm for toxic gas detection.

e. Include training information for employees who will be involved as entrants and attendants for the work. Conform to Section 06.I.07 of USACE EM 385-1-1.

f. Daily Entry Permit. Post the permit in a conspicuous place close to the confined space entrance.

3.9 CRYSTALLINE SILICA

Grinding, abrasive blasting, and foundry operations of construction materials containing crystalline silica, shall comply with USACE EM 385-1-1, Appendix C. The Contractor shall develop and implement effective exposure control and elimination procedures to include dust control systems, engineering controls, and establishment of work area boundaries, as well as medical surveillance, training, air monitoring, and personal protective equipment.

3.10 DEMOLITION

3.101.1 Demolition Plan

The Contractor shall submit a written demolition plan for all demolition work to be carried on the site. In addition, the demolition plan shall be signed by a Professional Registered Engineer and meet the requirements of the Corps of Engineers Safety and Health Manual, EM 385-1-1, section 23. The demolition plan shall be submitted to the COR at least 1 week before the beginning of the work, including structural calculations for the demolition, if necessary. The demolition work shall not begin before the Contractor has received a written approval from the COR.

3.12.1 Protection of Personnel

During the demolition work the Contractor shall continuously evaluate the condition of the structure being demolished and take immediate action to protect all personnel working in and around the demolition site. No area, section, or component of floors, roofs, walls, columns, pilasters, or other structural element will be allowed to be left standing without sufficient bracing, shoring, or lateral support to prevent collapse or failure while workers remove debris or perform other work in the immediate area.

3.10.1 Protection of Structures

Floors, roofs, walls, columns, pilasters, and other structural components that are designed and constructed to stand without lateral support or shoring, and are determined to be in stable condition, shall remain standing without additional bracing, shoring, or lateral support until demolished, unless directed otherwise by the COR. The Contractor shall ensure that no elements determined to be unstable are left unsupported and shall be responsible for placing and securing bracing, shoring, or lateral supports as may be required as a result of any cutting, removal, or demolition work performed under this contract.

Interior concrete or masonry walls shall be demolished from the top down unless a Registered Engineer can demonstrate that an alternate method poses no additional safety hazards

3.11 HOUSEKEEPING

3.11.1 Clean-Up

The Contractor shall be responsible for cleaning up. The Contractor shall require his personnel to keep the immediate work site clean of all dirt and debris resulting from work under this contract. Accumulated dirt and debris shall be hauled off and disposed of in accordance with local law and at least once a week by the Contractor. Additionally, all debris in work areas shall be cleaned up daily or more frequently if necessary. Construction debris may be temporarily located in an approved location, however garbage accumulation must be removed each day.

Stairwells used by the Contractor during execution of work shall be cleaned daily. Cloths, mops, and brushes containing combustible materials shall be disposed of or stored outside of the buildings in tight covered metal containers. Paints and thinners shall not be poured into inlets of the interior or exterior sewage system. Paint, stains, and other residues on adjacent surfaces or fixtures caused by the Contractor shall be carefully removed and cleaned to original finish. Upon completion of the work, the Contractor shall remove all construction equipment, materials and debris resulting from the work. The entire work site and the area used by Contractor personnel shall be left clean.

ATTACHMENT

STR 01525O – SAFETY AND OCCUPATIONAL HEALTH PHASING PLAN

- End of Section-

A. PURPOSE AND RESPONSIBILITIES:

1. The purpose of this SOH Phasing Plan is to establish controls and procedures to reduce the safety and occupational health risks on associated projects to an acceptable level. This SOH Phasing Plan is not intended to address all program SOH requirements, but provides general emphasis to certain procedures and requirements addressed in: EM 385-1-1, U.S. Army Corps of Engineers Safety and Health Requirements Manual

2. For contractor safety on projects associated with this program, compliance with EM 385-1-1 safety requirements will be the long-term goal reached by growing a safety culture. This compliance will, by necessity, be achieved through a phased-in process. In the Commander's letter at the preface of the EM 385-1-1, he acknowledges that in OCONUS locations, strict compliance with the manual may not be possible – and through the hazard analysis process, safety measures can be developed to attain the same degree of safety.

a. The exact timeline and methods of compliance, based generally on the Phase plan below will be determined by in-theater Project Delivery Team (PDT) partners responsible for safety, to include USACE Field Engineering/Construction/ Safety personnel, Prime Contractors and Local Subcontractors. The Prime Contractor, in partnership with the USACE and subcontractors, will develop a Safety and occupational Health Plan (SOHP) consisting of a specific Accident Prevention Plan (APP) and Activity Hazard Analysis for each project.

b. Each project SOHP will evolve as a living document, starting by dividing into phases to provide a goal with a timeline. Focus for the project safety program areas will be based on the following time-based phases.

Phase I: "Saving Lives". Establish achievable compliance methods and basic worker safety education to eliminate or reduce to an acceptable level the life-threatening conditions associated with high hazard construction activities.

- The initial high-hazard focus areas shall include:
  - Excavations
  - Fall Hazards
  - Electrical Work
  - Mobile Construction Equipment
  - Machinery
  - Confined Spaces
- Develop a basic worker safety and health practices manual/ guide and associated mandatory training for each Focus area listed above. These will be in English and local language, based on local conditions and practices and targeted at high-hazard activities.
- On all contract sites, the basic life-support will include First Aid Kits, and emergency communication.
- Contractor Accident Prevention Plans, Activity Hazard Analyses, and other safety-related systems under development with assistance by PDT

Phase II: "Building A Safety Culture" (Approximately one year, beginning at end of Phase I) Advanced safety education of local contractors and LN work force. Full contractor compliance with USACE safety standards related to high-hazard situations, increased application of standards on all work.

- Workforce education and training to include all applicable requirements of EM 385-1-1 and International Safety Standards
- All required Personal Protective Equipment (PPE) available and used by workers in applicable work practices, as outlined in the EM 385-1-1.
- Contractor Accident Prevention Plans, Activity Hazard Analyses, and other safety-related systems refined to meet standard USACE expectations with assistance by PDT
- Standard Contractor Safety administrative responsibilities required, i.e.: Accident reporting, man-hour tracking, training documentation, First Aid personnel certification, fire protection, etc.

Phase III, "Full Performance" (beginning at end of Phase II) Full performance in compliance with EM 385-1-1 and other applicable laws, regulations, design codes and standards.
Where standard compliance is not possible, local methods may be used in accordance with implementing letter of EM 385-1-1 or through formal waiver process.

3. The PDT shall employ the "Plan, Do, Check, Act" process for implementing this SOHP as a living document. Each PDT member is responsible for planning for safety and health management within their area of responsibility, implementing agreed-on mitigation, checking to assure that the SOHP is being implemented and acting to adjust plans and implementation with a goal of continuous improvement. This plan will be reviewed and revised as needed at the initiation of each Phase listed above.

4. The PDT members shall cooperate in developing a listing of potential hazards associated with each project.

B. GOALS AND OBJECTIVES:

1. Goals. The safety and health goals of all projects are:
   a. Be accident free
   b. Detect and address safety and health problems early in the life of each project
   c. Do not accept unnecessary risk
   d. Every team member, to include contractors shall contribute to the safety and health of their fellow team members and assure that the product is free of inherent hazards to the user.
   e. Educate the workforce and promote Safety as a new way of doing business, show how the project and the employee benefit from Safety.

2. Objectives. The safety and health objectives of this program are:
   a. Managers, supervisors, and workers shall be held accountable, based on the current Phase, for safety and health.
   b. Safety and health expectations shall be communicated with the work force in their native language through the use of banners, flyers, and periodic safety meetings
   c. The work force shall have the safety and health training needed to perform the work at hand, based on the Phase.
   d. Injury and property damage shall be avoided through early detection and management of hazards

Phase I Interim Safety and Occupational Health Work Practices for USACE Contractor Projects

Phase I Safety Program

1. Contractors shall strive to maintain full compliance with the USACE Safety Requirements Manual, EM 385-1-1. This may not be easily achieved during this Phase, due to a number of factors. The focus for safety and health efforts during this Phase is Saving Lives – the prevention of deaths, permanently disabling injuries, and major property loss. The goal during this period is to provide the equipment and methods needed to save lives and to train the workforce in working safely and using the correct personal Protective Equipment (PPE).

2. In order to assist in achieving this goal immediately, the following interim standards shall be used (as a minimum acceptable standard) when full compliance with the EM 385-1-1 is not possible. Contractors shall provide these standards in to their workforce in the local language and shall provide training as needed to ensure worker awareness.

Basic Safety and Health Standards for Construction

A. USACE and the contractors must form a team to assure safety on every job site and prevent serious accidents. All unsafe conditions must be reported and the hazard reduced before work may proceed.

B. Personal Protective Equipment (PPE) may not always be available to every worker during this Phase. Where the equipment required by the USACE Safety Manual, EM 385-1-1, cannot be provided in a timely manner, the contractor shall develop methods that will provide a similar degree of safety (as accepted by USACE) and not expose the workers to serious risk. The mandatory minimum standards for all PPE are:

- Footwear: Closed-toe durable shoes or boots shall be worn by all workers on the project site. No sandals or sports shoes will be allowed, at no time will workers be allowed on the project site with bare feet. Safety footwear (steel-toe or other protection) should be worn by workers using steel rollers, tampers, jack hammers or carrying heavy objects (metal, concrete, stone)
- Head Protection: When they are available, hard hats should be worn by all construction workers when they are at the project. Hard Hats must be worn in overhead hazard areas including material hoisting/ lifting operations, areas below scaffolds and other elevated work, in excavations, and low ceiling areas that have sharp or hazardous projections. If they are not available, then workers must be kept away from these and other overhead hazard areas.
- Respirators: Workers exposed to toxic chemicals, vapors, gases and dusts must wear proper respiratory protection. Such exposure is expected in asbestos removal/ repair work, working with paints and solvents in rooms or enclosed spaces, and fuel production facilities. The employer must train the workers in the uses of the respirator and how to properly wear it. The minimum acceptable respirator is a negative pressure filter or cartridge half-face respirator that is correctly equipped for the hazard. Contractors shall consult and follow the ACGIH guidance for length of allowable exposure to the contaminant and workers shall not exceed the recommended time for exposure. Dust Masks will be worn when the work is producing visible dust.
- Eye Protection: Workers shall wear protective glasses, goggles, or visors when exposed to eye hazards. These hazards include concrete dust, stone and concrete chips from hammering, sandblasting, and power tool cutting or milling. Workers performing welding and cutting with torches or arc-welding equipment shall wear the proper shaded lenses in face shields and/ or goggles.
- Hearing Protection: Protective ear plugs shall be worn when workers are exposed to potentially damaging noise including jack hammers, flight line operations, power saws and grinders, and combustion engines without mufflers.
- Gloves: All workers shall have protective gloves appropriate to the task.
- Clothing: Workers shall wear clothing that protects their skin from damage – shirts and long pants at a minimum. Workers exposed to welding operations, chemicals, abrasive blasting, wet concrete, asbestos, and other hazardous contaminants will wear appropriate clothing for the hazard. Workers using power tools or operating equipment shall not wear very loose or flowing clothing that may get caught in the equipment.

C. Work Methods for Highly Hazardous Work: The following types of work and hazards are recognized as the leading cause of serious injuries and deaths in construction work. Each type of work has specific PPE and safety equipment that is required to do the work and also specific procedures that must be followed every time the work is done. These interim measures are the minimum acceptable precautions. For each project, an Activity Hazard Analysis (AHA) shall be completed and, when possible, compliance with more restrictive methods of the EM 385-1-1 shall be achieved.

Workers shall be trained on the following safety precautions, the nature of the hazards involved, and any additional work methods used before performing each type of work

- Excavations
  - The Site Safety and Health Officer will be contacted for inspection of the work prior to digging. The SSHO will assist in any safety equipment or techniques that are required to avoid injury. They will also provide a safety check on the location to assure the there are no underground hazards at the site.

- All excavations or unsafe areas will be marked with barricades or warning tape. These warnings must be maintained and visible until the area is restored to a safe condition.
- When workers will enter trenches, the walls shall be sloped according to the type of soil or shoring, trench boxes, or other structures will be used to protect workers from collapsing walls
- Soil removed from trenches will not be placed at the edge of the trench – it must be placed back at least 1 meter from the edge.
- Vehicles and construction equipment must not be parked closer than 2 meters from the edge of an excavation.
- Excavation walls shall be inspected regularly during each day to check for cracks, bulges, large stones, sandy areas, and failure of the wall. If these conditions are found, nobody may enter the excavation and the damaged area must be dug out or braced.

- Fall Hazards
  - When working above 2 meters from the ground or another level, all workers shall be protected from falling. The SSHO will inspect prior to beginning work to be sure the work methods are safe. Inspection will include work on ladders, scaffolds, and other elevated work areas.
  - Protection systems shall be sturdy railings, walls, or other structures
  - If there are no structures to protect workers, body belts or harnesses shall be used along with lanyards.
  - Body belts should be mainly be used only to prevent a worker from falling over an edge or off a structure.
  - Body belts and harnesses can both be used as fall protection (stopping a falling worker). The lanyard shall be rope strong enough to withstand the shock of stopping the worker's weight, and they shall be as short as possible, to limit the shock force. Lanyards shall never allow a worker to fall more than 2 meters. It is recommended that lanyards without shock absorber devices be no longer than 1 meter.
- Electrical Work
  - All circuits, wires, and electrical devices shall be tested with a volt meter and found to be de-energized before workers touch the energized parts
  - Controls, switches, and other means for energizing the circuit or equipment shall be tagged "do not operate"
  - Workers shall not work closer to energized systems than the distances listed in the USACE manual.
  - Temporary electrical systems shall be grounded and tested for good ground resistance before use.
  - Power tools shall be protected from water and damage, and their cords must be insulated. Cords must be factory installed or equivalent replacements, including safety grip plug and cord boot.
  - Extension cords will be in safe, good working order.
- Mobile Construction Equipment
  - If equipment, particularly cranes, are damaged the repairs shall be done by a competent repair person and verified by the SSHO prior to being brought back into service.
  - Nobody may ride outside the cab of construction equipment. Specifically, no riders may ever be in loader buckets, bulldozer blades, on forklift forks, or suspended by a crane.
  - When workers are nearby, construction equipment must have reverse signal alarms or shall use a spotter standing away from the equipment. The spotter must be visible by the driver and positioned to see the area behind the equipment.

- Construction equipment must work a safe distance from electrical systems, based on the voltage.
- Cranes must be used according to the manufacturer. If no manufacturer data is available, a load chart shall be developed by a qualified engineer.
- Workers should stay out of the radius of the crane boom during a lift.
- Lifting ropes shall be inspected daily for breaks and failure of hardware and fittings.
- Nobody shall ever ride the hook or load of a crane.

- Machinery
  - Rotating shafts, wheels, blades, and other hazardous parts shall have guards to prevent workers from being injured.
  - Fuel-powered machinery must not be operated indoors or near enclosed areas without using powered ventilation to prevent toxic CO build-up.
  - Metal housings of electrically powered equipment must be grounded
- Confined Spaces
  - The SSHO will pre-approve any work in a confined space, such as in a tank, sewer, manhole or any other enclosed area. The SSHO will inspect the work and assist with any safety equipment or techniques that are required.
  - All permit-required confined spaces (PRCS) on a project shall have signs prohibiting entry.
  - Entrants, supervisors, and attendants for PRCS shall be properly trained.
  - When available, oxygen/flammable/toxic gas meters shall be used for all PRCS. This equipment must be used to evaluate the air in all spaces known or suspected to have contained flammable or toxic chemicals or contain sewage, rotting vegetation or other organic matter.
  - For spaces not meeting the above criteria, mechanical ventilation fans shall be used to clear the air in the space when meters are not available. Based on the air flow of the fan, it shall exhaust the total volume of the space a minimum of seven times prior to entry.
  - All entrants shall wear a harness, body belt, or other device attached to a rope sufficient to retrieve the worker in an emergency.
  - Permits should be used during PRCS entry. If not possible, then some visible means, such as flags or tags outside the entrance, shall be used so supervisors can see when workers are in the space.
- Gas Cylinders
  - Pressurized gas cylinders, such as Oxygen and Acetylene tanks will be stored in a holding stand/ cart to prevent them from falling over. Cylinders will not be placed free on the ground or standing free. If the bottle is not in use the valve will be removed.

D. Child Labor. Minors under the age of 18 may not perform any of the above hazardous work. Additionally, these minors can not perform any hazardous work such as operating dangerous power tools (circular saws, jack hammers, lathes, etc), driving vehicles, be exterior assistants for vehicle operators or operating mobile construction equipment, explosives work, work at heights over 2 meters without standard railings, electrical work, entering excavations, and work with toxic substances.

-- End of Section --

SECTION 01780A CLOSEOUT SUBMITTALS

PART 1 GENERAL

1.1 SUBMITTALS

Government approval is required for submittals with a "G" designation; submittals not having a "G" designation are for Contractor Quality Control approval. When used, a designation following the "G" designation identifies the office that will review the submittal for the Government. The following shall be submitted in accordance with Section 01335 SUBMITTAL PROCEDURES:

SD-02 Shop Drawings

As-Built Drawings

Drawings showing final as-built conditions of the project. The local language of Afghanistan shall be added to project As-Built drawings. The final CADD as-built drawings shall consist of **4 sets** of electronic CADD drawing files in the specified format, and **4 half-size and 2 full-size paper copies** of the approved as-built drawings.

SD-03 Product Data

As-Built Record of Equipment and Materials

Two copies of the record listing the as-built materials and equipment incorporated into the construction of the project.

Warranty Management Plan

One set of the warranty management plan containing information relevant to the warranty of materials and equipment incorporated into the construction project, including the starting date of warranty of construction. The Contractor shall furnish with each warranty the name, address, and telephone number of each of the guarantor's representatives nearest to the project location.

Warranty Tags

Two record copies of the warranty tags showing the layout and design.

Final Cleaning

Two copies of the listing of completed final clean-up items.

1.2 PROJECT RECORD DOCUMENTS

1.2.1 As-Built Drawings

This paragraph covers as-built drawings complete, as a requirement of the contract. The terms "drawings," "contract drawings," "drawing files," "working as-built drawings" and "final as-built drawings" refer to contract drawings which are revised to be used for final as-built drawings.

1.2.1.1 Government Furnished Materials

One set of electronic CADD files in the specified software and format revised to reflect all bid amendments will be provided by the Government at the preconstruction conference for projects requiring CADD file as-built drawings.

1.2.1.2 Working As-Built and Final As-Built Drawings

a. The Contractor shall revise 2 sets of paper drawings by red-line process to show the as-built conditions during the prosecution of the project. These working as-built marked drawings shall be kept current on a weekly basis and at least one set shall be available on the jobsite at all times. Changes from the contract plans which are made in the work or additional information which might be uncovered in the course of construction shall be accurately and neatly recorded as they occur by means of details and notes. Final as-built drawings shall be prepared after the completion of each definable feature of work as listed in the Contractor Quality Control Plan (Foundations, Utilities, Structural Steel, etc., as appropriate for the project). The working as-built marked prints and final as-built drawings will be jointly reviewed for accuracy and completeness by the Contracting Officer and the Contractor prior to submission of each monthly pay estimate. If the Contractor fails to maintain the working and final as-built drawings as specified herein, the Contracting Officer will deduct from the monthly progress payment an amount representing the estimated cost of maintaining the as-built drawings. This monthly deduction will continue until an agreement can be reached between the Contracting Officer and the Contractor regarding the accuracy and completeness of updated drawings. The working and final as-built drawings shall show, but shall not be limited to, the following information:

b. The actual location, kinds and sizes of all sub-surface utility lines. In order that the location of these lines and appurtenances may be determined in the event the surface openings or indicators become covered over or obscured, the as-built drawings shall show, by offset dimensions to two permanently fixed surface features, the end of each run including each change in direction. Valves, splice boxes and similar appurtenances shall be located by dimensioning along the utility run from a reference point. The average depth below the surface of each run shall also be recorded.

c. The location and dimensions of any changes within the building structure.

d. Correct grade, elevations, cross section, or alignment of roads, earthwork, structures or utilities if any changes were made from contract plans.

e. Changes in details of design or additional information obtained from working drawings specified to be prepared and/or furnished by the Contractor; including but not limited to fabrication, erection, installation plans and placing details, pipe sizes, insulation material, dimensions of equipment foundations, etc.

f. The topography, invert elevations and grades of drainage installed or affected as part of the project construction.

g. Changes or modifications which result from the final inspection.

h. Where contract drawings or specifications present options, only the option selected for construction shall be shown on the final as-built prints.

i. If borrow material for this project is from sources on Government property, or if Government property is used as a

spoil area, the Contractor shall furnish a contour map of the final borrow pit/spoil area elevations.

j. Systems designed or enhanced by the Contractor, such as HVAC controls, fire alarm, fire sprinkler, and irrigation systems.

k. Modifications (change order price shall include the Contractor's cost to change working and final as-built drawings to reflect modifications) and compliance with the following procedures.

(1) Directions in the modification for posting descriptive changes shall be followed.

(2) A Modification Circle shall be placed at the location of each deletion.

(3) For new details or sections which are added to a drawing, a Modification Circle shall be placed by the detail or section title.

(4) For minor changes, a Modification Circle shall be placed by the area changed on the drawing (each location).

(5) For major changes to a drawing, a Modification Circle shall be placed by the title of the affected plan, section, or detail at each location.

(6) For changes to schedules or drawings, a Modification Circle shall be placed either by the schedule heading or by the change in the schedule.

(7) The Modification Circle size shall be 12.7 mm 1/2 inch diameter unless the area where the circle is to be placed is crowded. Smaller size circle shall be used for crowded areas.

1.2.1.3 Drawing Preparation

The as-built drawings shall be modified as may be necessary to correctly show the features of the project as it has been constructed by bringing the contract set into agreement with approved working as-built prints, and adding such additional drawings as may be necessary. These working as-built marked prints shall be neat, legible and accurate. These drawings are part of the permanent records of this project and shall be returned to the Contracting Officer after approval by the Government. Any drawings damaged or lost by the Contractor shall be satisfactorily replaced by the Contractor at no expense to the Government.

1.2.1.4 Computer Aided Design and Drafting (CADD) Drawings

a. Only personnel proficient in the preparation of CADD drawings shall be employed to modify the contract drawings or prepare additional new drawings. Additions and corrections to the contract drawings shall be equal in quality and detail to that of the originals. Line colors, line weights, lettering, layering conventions, and symbols shall be the same as the original line colors, line weights, lettering, layering conventions, and symbols. If additional drawings are required, they shall be prepared using the specified electronic file format applying the same graphic standards specified for original drawings. The title block and drawing border to be used for any new final as-built drawings shall be identical to that used on the contract drawings. Additions and corrections to the contract drawings shall be accomplished using CADD files. The Contractor will be furnished "as-designed" drawings in AutoCAD Release 2007 or Microstation V8 format compatible with a Windows XP operating system. The electronic files will be supplied on compact disc, read-only memory (CD-ROM). The Contractor shall be responsible for providing all program files and hardware necessary to prepare final as-built drawings.

b. Prior to submittal of the first design submittal involving CADD drawings, the Contractor shall prepare one typical CADD drawing for the project and furnish, via ENG Form 4025, the electronic CADD drawing file for review and approval by the Contracting Officer. All Government comments involving changes to this single drawing shall be accomplished and resubmittal(s) made until the Government is satisfied that all CADD Standards are being followed and all subsequent drawings will also be in compliance with these Standards.

c. CADD colors shall be the "base" colors of red, green, and blue. Color code for changes shall be as follows:

(1) Deletions (red) - Deleted graphic items (lines) shall be colored red with red lettering in notes and leaders.

(2) Additions (Green) - Added items shall be drawn in green with green lettering in notes and leaders.

(3) Special (Blue) - Items requiring special information, coordination, or special detailing or detailing notes shall be in blue.

d. The Contract Drawing files shall be renamed in a manner related to the contract number (i.e., 98-C-10.DGN) as instructed in the Pre-Construction conference. Marked-up changes shall be made only to those renamed files. All changes shall be made on the layer/level as the original item. There shall be no deletions of existing lines; existing lines shall be over struck in red. Additions shall be in green with line weights the same as the drawing. Special notes shall be in blue on layer#63.

e. When final revisions have been completed, the cover sheet drawing shall show the wording "RECORD DRAWING AS-BUILT" followed by the name of the Contractor in letters at least 5 mm 3/16 inch high. All other contract drawings shall be marked either "As-Built" drawing denoting no revisions on the sheet or "Revised As-Built" denoting one or more revisions. Original contract drawings shall be dated in the revision block.

f. After Government approval of all of the working as-built drawings for a phase of work, the Contractor shall prepare the final CADD as-built drawings for that phase of work and submit two sets of full size paper copy prints of these drawings for Government review, comparison with approved red-line marked up drawings, and approval. The Government will promptly return one set of prints annotated with any necessary corrections to the CADD file(s) if corrections are required prior to approval. Within 20 days of substantial completion of all phases of work, the Contractor shall submit the final as-built drawing package for the entire project. The submittal shall consist of one set of electronic files on compact disc, read-only memory (CD-ROM), one set of full size paper prints and one set of the approved working as-built drawings. They shall be complete in all details and identical in form and function to the contract drawing files supplied by the Government. Any transactions or adjustments necessary to accomplish this is the responsibility of the Contractor. The Government reserves the right to reject any drawing files it deems incompatible with the CADD system. Upon approval by the Government of the final as-built drawing package for the entire project, the Contractor shall provide the number of as-built copies noted in Paragraph 1.1 of this Section.

g. Paper prints, drawing files and storage media submitted will become the property of the Government upon final approval. Failure to submit final as-built drawing files and marked prints as specified shall be cause for withholding any payment due the Contractor under this contract. Approval and acceptance of final as-built drawings shall be accomplished before final payment is made to the Contractor.

1.2.1.5 Payment

No separate payment will be made for as-built drawings required under this contract, and all costs accrued in connection with such drawings shall be considered a subsidiary obligation of the Contractor.

1.2.2 As-Built Record of Equipment and Materials

The Contractor shall furnish one copy of preliminary record of equipment and materials used on the project 15 days prior to final inspection. This preliminary submittal will be reviewed and returned 2 days after final inspection with Government comments. Two sets of final record of equipment and materials shall be submitted 10 days after final inspection. The designations shall be keyed to the related area depicted on the contract drawings. The record shall list the following data:

RECORD OF DESIGNATED EQUIPMENT AND MATERIALS DATA

Description	Specification Section	Manufacturer and Catalog, Model, and Serial Number	Composition and Size	Where Used

1.2.3 Final Approved Shop Drawings

The Contractor shall furnish final approved project shop drawings 30 days after transfer of the completed facility.

1.2.4 Construction Contract Specifications

The Contractor shall furnish final as-built construction contract specifications, including modifications thereto, 30 days after transfer of the completed facility.

1.2.5 Real Property Equipment

The Contractor shall furnish a list of installed equipment furnished under this contract. The list shall include all information usually listed on manufacturer's name plate. The "EQUIPMENT-IN-PLACE LIST" shall include, as applicable, the following for each piece of equipment installed: description of item, location (by room number), model number, serial number, capacity, name and address of manufacturer, name and address of equipment supplier, condition, spare parts list, manufacturer's catalog, and warranty. A draft list shall be furnished at time of transfer. The final list shall be furnished 30 days after transfer of the completed facility.

1.3 WARRANTY MANAGEMENT

1.3.1 Warranty Management Plan

The Contractor shall develop a warranty management plan which shall contain information relevant to the clause Warranty of Construction. At least 30 days before the planned pre-warranty conference, the Contractor shall submit the warranty management plan for Government approval. The warranty management plan shall include all required actions and documents to assure that the Government receives all warranties to which it is entitled. The plan shall be in narrative form and contain sufficient detail to render it suitable for use by future maintenance and repair personnel, whether tradesmen, or of engineering background, not necessarily familiar with this contract. The term "status" as indicated below shall include due date and whether item has been submitted or was accomplished. Warranty information made available during the construction phase shall be submitted to the Contracting Officer for approval prior to each monthly pay estimate. Approved information shall be assembled in a binder and shall be turned over to the Government upon acceptance of the work. The construction warranty period shall begin on the date of project acceptance and shall continue for the full product warranty period. A joint 4 month and 9 month warranty inspection shall be conducted, measured from time of acceptance, by the Contractor, Contracting Officer and the Customer Representative. Information contained in the warranty management plan shall include, but shall not be limited to, the following:

a. Roles and responsibilities of all personnel associated with the warranty process, including points of contact and telephone numbers within the organizations of the Contractors, subcontractors, manufacturers or suppliers involved.

b. Listing and status of delivery of all Certificates of Warranty for extended warranty items, to include roofs, HVAC balancing, pumps, motors, transformers, and for all commissioned systems such as fire protection and alarm systems, sprinkler systems, lightning protection systems, etc.

c. A list for each warranted equipment, item, feature of construction or system indicating:

1. Name of item.
2. Model and serial numbers.
3. Location where installed.
4. Name and phone numbers of manufacturers or suppliers.
5. Names, addresses and telephone numbers of sources of spare parts.
6. Warranties and terms of warranty. This shall include one-year overall warranty of construction. Items which have extended warranties shall be indicated with separate warranty expiration dates.
7. Cross-reference to warranty certificates as applicable.
8. Starting point and duration of warranty period.
9. Summary of maintenance procedures required to continue the warranty in force.
10. Cross-reference to specific pertinent Operation and Maintenance manuals.
11. Organization, names and phone numbers of persons to call for warranty service.
12. Typical response time and repair time expected for various warranted equipment.

d. The Contractor's plans for attendance at the 4 and 9 month post-construction warranty inspections conducted by the Government.

e. Procedure and status of tagging of all equipment covered by extended warranties.

f. Copies of instructions to be posted near selected pieces of equipment where operation is critical for warranty and/or safety reasons.

1.3.2 Pre-Warranty Conference

Prior to contract completion, and at a time designated by the Contracting Officer, the Contractor shall meet with the Contracting Officer to develop a mutual understanding with respect to the requirements of this section. Communication procedures for Contractor notification of construction warranty defects, priorities with respect to the type of defect, reasonable time required for Contractor response, and other details deemed necessary by the Contracting Officer for the execution of the construction warranty shall be established/reviewed at this meeting. In connection with these requirements and at the time of the Contractor's quality control completion inspection, the Contractor shall furnish the name, telephone number and address of a licensed and bonded company which is authorized to initiate and pursue construction warranty work action on behalf of the Contractor. This point of contact will be located within the local service area of the warranted construction, shall be continuously available, and shall be responsive to Government inquiry on warranty work action and status. This requirement does not relieve the Contractor of any of its responsibilities in connection with other portions of this provision.

1.3.3 Contractor's Response to Construction Warranty Service Requirements

Following oral or written notification by the Contracting Officer, the Contractor shall respond to construction warranty service requirements in accordance with the "Construction Warranty Service Priority List" and the three categories of priorities listed below. The Contractor shall submit a report on any warranty item that has been repaired during the warranty period. The report shall include the cause of the problem, date reported, corrective action taken, and when the repair was completed. If the Contractor does not perform the construction warranty within the timeframes specified, the Government will perform the work and backcharge the construction warranty payment item established.

a. First Priority Code 1. Perform onsite inspection to evaluate situation, and determine course of action within 4 hours, initiate work within 6 hours and work continuously to completion or relief.

b. Second Priority Code 2. Perform onsite inspection to evaluate situation, and determine course of action within 8 hours, initiate work within 24 hours and work continuously to completion or relief.

c. Third Priority Code 3. All other work to be initiated within 3 work days and work continuously to completion or relief.

d. The "Construction Warranty Service Priority List" is as follows:

Code 1-Air Conditioning Systems
1) Recreational support.
2) Air conditioning leak in part of building, if causing damage.
3) Air conditioning system not cooling properly.

Code 1-Doors
1) Overhead doors not operational, causing a security, fire, or safety problem.
2) Interior, exterior personnel doors or hardware, not functioning properly, causing a security, fire, or safety problem.

Code 3-Doors
1) Overhead doors not operational.
2) Interior/exterior personnel doors or hardware not functioning properly.

Code 1-Electrical
1) Power failure (entire area or any building operational after 1600 hours).
2) Security lights
3) Smoke detectors

Code 2-Electrical
1) Power failure (no power to a room or part of building).
2) Receptacle and lights (in a room or part of building).

Code 3-Electrical
Street lights.

Code 1-Gas
1) Leaks and breaks.
2) No gas to family housing unit or cantonment area.

Code 1-Heat
1) Area power failure affecting heat.
2) Heater in unit not working.

Code 2-Kitchen Equipment
1) Dishwasher not operating properly.
2) All other equipment hampering preparation of a meal.

Code 1-Plumbing
1) Hot water heater failure.
2) Leaking water supply pipes.

Code 2-Plumbing
1) Flush valves not operating properly.
2) Fixture drain, supply line to commode, or any water pipe leaking.
3) Commode leaking at base.

Code 3 –Plumbing
Leaky faucets.

Code 3-Interior

1) Floors damaged.
2) Paint chipping or peeling.
3) Casework.

Code 1-Roof Leaks

Temporary repairs will be made where major damage to property is occurring.

Code 2-Roof Leaks

Where major damage to property is not occurring, check for location of leak during rain and complete repairs on a Code 2 basis.

Code 2-Water (Exterior)

No water to facility.

Code 2-Water (Hot)

No hot water in portion of building listed.

Code 3-All other work not listed above.

1.3.5 Warranty Tags

At the time of installation, each warranted item shall be tagged with a durable, oil and water resistant tag approved by the Contracting Officer. Each tag shall be attached with a copper wire and shall be sprayed with a silicone waterproof coating. The date of acceptance and the QC signature shall remain blank until project is accepted for beneficial occupancy. The tag shall show the following information.

a. Type of product/material_____.

b. Model number_____.

c. Serial number_____.

d. Contract number_____.

e. Warranty period_____from_____to_____.

f. Inspector's signature_____.

g. Construction Contractor_____.
Address_____. Telephone number_____.

h. Warranty contact_____.
Address_____. Telephone number_____.

i. Warranty response time priority code_____.

j. WARNING - PROJECT PERSONNEL TO PERFORM ONLY OPERATIONAL MAINTENANCE DURING THE WARRANTY PERIOD.

1.4 MECHANICAL TESTING, ADJUSTING, BALANCING, AND COMMISSIONING

Prior to final inspection and transfer of the completed facility; all reports, statements, certificates, and completed checklists for testing, adjusting, balancing, and commissioning of mechanical systems shall be submitted to and approved by the Contracting Officer as specified inapplicable technical specification sections.

1.5 OPERATION AND MAINTENANCE MANUALS

Three (3) copies of all Operation and Maintenance (O&M) manuals shall be submitted as follows:

AFGHANISTAN ENGINEER DISTRICT

(1) DHL, FEDEX, UPS or any other courier service:

U.S. Army Corps of Engineers
Afghanistan Engineer District
House # 1, St. #1 West
West Wazir Akbar High School
Behind Amani High School
Kabul, Afghanistan
Attn: Chief, Engineering Branch

or

(2) U.S. Postal Service:
U.S. Army Corps of Engineers
Afghanistan Engineer District (CEAED-EC)
Attn.: Chief, Engineering Division
APO AE 09356

Operation manuals and maintenance manuals shall be provided in a common volume, complete, clearly differentiated and separately indexed.

1.6 FINAL CLEANING

The premises shall be left broom clean. Stains, foreign substances, and temporary labels shall be removed from surfaces. Carpet and soft surfaces shall be vacuumed. Equipment and fixtures shall be cleaned to a sanitary condition. Filters of operating equipment shall be replaced. Debris shall be removed from roofs, drainage systems, gutters, and downspouts. Paved areas shall be swept and landscaped areas shall be raked clean. The site shall have waste, surplus materials, and rubbish removed. The project area shall have temporary structures, barricades, project signs, and construction facilities removed. A list of completed clean-up items shall be submitted on the day of final inspection.

PART 2 PRODUCTS (NOT USED)

PART 3 EXECUTION (NOT USED)

-- End of Section -

SECTION 01781 OPERATION AND MAINTENANCE DATA

PART 1 GENERAL

1.1 SUBMISSION OF OPERATION AND MAINTENANCE DATA

Submit Operation and Maintenance (O&M) Data specifically applicable to this contract and a complete and concise depiction of the provided equipment, product, or system. Organize and present information in sufficient detail to clearly explain O&M requirements at the system, equipment, component, and subassembly level. Include an index preceding each submittal. Submit in accordance with this section and Section 01335 SUBMITTAL PROCEDURES.

1.1.1 Package Quality

Documents must be fully legible. Poor quality copies and material with hole punches obliterating the text or drawings will not be accepted.

1.1.2 Package Content

Data package content shall be as shown in the paragraph titled "Schedule of Operation and Maintenance Data Packages." Comply with the data package requirements specified in the individual technical sections, including the content of the packages and addressing each product, component, and system designated for data package submission.

1.1.3 Changes to Submittals

Manufacturer-originated changes or revisions to submitted data shall be furnished by the Contractor if a component of an item is so affected subsequent to acceptance of the O&M Data. Changes, additions, or revisions required by the Contracting Officer for final acceptance of submitted data, shall be submitted by the Contractor within 30 calendar days of the notification of this change requirement.

1.2 TYPES OF INFORMATION REQUIRED IN O&M DATA PACKAGES

1.2.1 Operating Instructions

Include specific instructions, procedures, and illustrations for the following phases of operation:

1.2.1.1 Safety Precautions

List personnel hazards and equipment or product safety precautions for all operating conditions.

1.2.1.2 Operator Prestart

Include procedures required to set up and prepare each system for use.

1.2.1.3 Startup, Shutdown, and Post-Shutdown Procedures

Provide narrative description for Startup, Shutdown and Post-shutdown operating procedures including the control sequence for each procedure.

1.2.1.4 Normal Operations

Provide narrative description of Normal Operating Procedures. Include Control Diagrams with data to explain operation and control of systems and specific equipment.

1.2.1.5 Emergency Operations

Include Emergency Procedures for equipment malfunctions to permit a short period of continued operation

or to shut down the equipment to prevent further damage to systems and equipment. Include Emergency Shutdown Instructions for fire, explosion, spills, or other foreseeable contingencies. Provide guidance and procedures for emergency operation of all utility systems including required valve positions, valve locations and zones or portions of systems controlled.

1.2.1.6 Operator Service Requirements

Include instructions for services to be performed by the operator such as lubrication, adjustment, inspection, and recording gage readings.

1.2.1.7 Environmental Conditions

Include a list of Environmental Conditions (temperature, humidity, and other relevant data) that are best suited for the operation of each product, component or system. Describe conditions under which the item equipment should not be allowed to run.

1.2.2 Preventive Maintenance

Include the following information for preventive and scheduled maintenance to minimize corrective maintenance and repair.

1.2.2.1 Lubrication Data

Include preventative maintenance lubrication data, in addition to instructions for lubrication provided under paragraph titled "Operator Service Requirements":

a. A table showing recommended lubricants for specific temperature ranges and applications.
b. Charts with a schematic diagram of the equipment showing lubrication points, recommended types and grades of lubricants, and capacities.
c. A Lubrication Schedule showing service interval frequency.

1.2.2.2 Preventive Maintenance Plan and Schedule

Include manufacturer's schedule for routine preventive maintenance, inspections, tests and adjustments required to ensure proper and economical operation and to minimize corrective maintenance. Provide manufacturer's projection of preventive maintenance work-hours on a daily, weekly, monthly, and annual basis including craft requirements by type of craft. For periodic calibrations, provide manufacturer's specified frequency and procedures for each separate operation.

1.2.3 Corrective Maintenance (Repair)

Include manufacturer's recommended procedures and instructions for correcting problems and making repairs.

1.2.3.1 Troubleshooting Guides and Diagnostic Techniques

Include step-by-step procedures to promptly isolate the cause of typical malfunctions. Describe clearly why the checkout is performed and what conditions are to be sought. Identify tests or inspections and test equipment required to determine whether parts and equipment may be reused or require replacement.

1.2.3.2 Wiring Diagrams and Control Diagrams

Wiring diagrams and control diagrams shall be point-to-point drawings of wiring and control circuits including factory-field interfaces. Provide a complete and accurate depiction of the actual job specific wiring and control work. On diagrams, number electrical and electronic wiring and pneumatic control tubing and the terminals for each type, identically to actual installation configuration and numbering.

1.2.3.3 Maintenance and Repair Procedures

Include instructions and a list of tools required to repair or restore the product or equipment to proper condition or operating standards.

1.2.3.4 Removal and Replacement Instructions

Include step-by-step procedures and a list required tools and supplies for removal, replacement, disassembly, and assembly of components, assemblies, subassemblies, accessories, and attachments. Provide tolerances, dimensions, settings and adjustments required. Instructions shall include a combination of text and illustrations.

1.2.3.5 Spare Parts and Supply Lists

Include lists of spare parts and supplies required for maintenance and repair to ensure continued service or operation without unreasonable delays. Special consideration is required for facilities at remote locations. List spare parts and supplies that have a long lead-time to obtain.

1.2.4 Corrective Maintenance Work-Hours

Include manufacturer's projection of corrective maintenance work-hours including requirements by type of craft. Corrective maintenance that requires completion or participation of the equipment manufacturer shall be identified and tabulated separately.

1.2.5 Appendices

Provide information required below and information not specified in the preceding paragraphs but pertinent to the maintenance or operation of the product or equipment. Include the following:

1.2.6 Parts Identification

Provide identification and coverage for all parts of each component, assembly, subassembly, and accessory of the end items subject to replacement. Include special hardware requirements, such as requirement to use high-strength bolts and nuts. Identify parts by make, model, serial number, and source of supply to allow reordering without further identification. Provide clear and legible illustrations, drawings, and exploded views to enable easy identification of the items. When illustrations omit the part numbers and description, both the illustrations and separate listing shall show the index, reference, or key number that will cross-reference the illustrated part to the listed part. Parts shown in the listings shall be grouped by components, assemblies, and subassemblies in accordance with the manufacturer's standard practice. Parts data may cover more than one model or series of equipment, components, assemblies, subassemblies, attachments, or accessories, such as typically shown in a master parts catalog

1.2.6.1 Warranty Information

List and explain the various warranties and include the servicing and technical precautions prescribed by the manufacturers or contract documents in order to keep warranties in force. Include warranty information for primary components such as the compressor of air conditioning system.

1.2.6.2 Personnel Training Requirements

Provide information available from the manufacturers that is needed for use in training designated personnel to properly operate and maintain the equipment and systems.

1.2.6.3 Testing Equipment and Special Tool Information

Include information on test equipment required to perform specified tests and on special tools needed for the operation, maintenance, and repair of components.

1.2.6.4 Contractor Information

Provide a list that includes the name, address, and telephone number of the General Contractor and each Subcontractor who installed the product or equipment, or system. For each item, also provide the name address and telephone number of the manufacturer's representative and service organization most convenient to the project site. Provide the name, address, and telephone number of the product, equipment, and system manufacturers.

PART 2 PRODUCTS

Not used.

PART 3 EXECUTION

3.1 TRAINING

Unless provided for elsewhere, the Contractor shall provide operational and maintenance training for all systems furnished under this contract in accordance with this section. The training shall not take place until the operation and maintenance manuals are submitted and approved.

Training will be given to personnel responsible for the operation and maintenance of the system at the installation. Orient training to the specific system being installed under this contract. Use operation and maintenance manual as the primary instructional aid in contractor provided activity personnel training. Manuals shall be delivered for each trainee with two additional sets delivered for archiving at the project site. Submit a training course schedule, syllabus, and training materials 14 days prior to the start of training. Obtain approval of the training course before beginning that phase of training. Furnish a qualified instructor approved by the system manufacturer to conduct training for the specific system.

Training manuals shall include an agenda, defined objectives and a detailed description of the subject matter for each lesson. Furnish audio-visual equipment and all other training materials and supplies. A training day is defined as 8 hours of classroom or lab instruction, including two 15 minute breaks and excluding lunch time, Monday through Friday, during the daytime shift in effect at the training facility. For guidance, the Contractor should assume the attendees will have a high school education.

The Contractor shall videotape the training session on VHS tapes and provide the tapes to the Government.

-- End of Section --

APPENDIX A – FHE DRAWINGS

Facilities of Higher Education at Various Locations, Afghanistan
(attached as separate document)

APPENDIX B 1335a ATTACHMENTS AED

(attached as separate document)

Appendix B – 1 ENG Form 1025

Appendix B – 2 Instructions

Appendix B – 3 TAC Form 122-E

Appendix B – 4 ENG Form 4288-R Submittal Register

Appendix B - 5 Figure 1 – AED Title Block Sheet Number/Description

Appendix B – 6 Figure 2 – AED Title Block Logo/Designed by/Reviewed by/Submitted by

Appendix B – 7 AED Title Block-Revisions Block Dimensioning

Appendix B - 8 Figure 4 – AED Title-Revisions Block Required Notations

Appendix B – 9 Figure 5 Finished Format Size

APPENDIX C Design Review Checklists US

These checklists are intended to serve only as a guide in checking or reviewing design documents for errors and omissions. It cannot substitute for the exercise of sound engineering judgment by reviewers. Professionals must maintain control of their decisions, understand the technical basis for those decisions, and independently evaluate significant data upon which the design decisions are based. The main usefulness of a checklist such as these is to provide a "minimum" check of consistency between disciplines, and compatibility of drawings to specifications.

Each item in the checklist must be checked off to indicate that the item has been reviewed, or marked "NA" to indicate it is not applicable. The items in the checklist shall be "checked" by a senior architect/engineer or the designer's supervisor. Blocks labeled "QC Check By:" shall be filled out with the names of such individuals.

In other words, items on the checklist shall not be "checked" or marked by the designer. However, designers are encouraged to utilize these checklists to ensure that their designs meet applicable items shown in the checklist.

Quality Control Checklist
(DETAILED CHECK)

_____
(insert design organization's name)

Project Name: _____

Location: _____

Project Number: _____

Designer (A-E/in-house): _____

Checked By:

Civil:__

Structural:_____

Architectural:_____

Mechanical: _____

Electrical: _____

Cost Estimating:_____

Specifications: _____

CADD:_____

Date:_____

General Remarks:

General Quality:

A. CIVIL

Quality Control Checklist **Civil Section**
(DETAILED CHECK)

_____
(insert design organization's name)

Concept Submittal (35%)

Project Name: _____

Location: _____

Project Number: _____ Date:_____

Civil Engineer:_____ QC Check By:_____

Check when complete, or mark NA if not applicable. Add comments to clarify as appropriate.

Drawings

- ❑ Location and Vicinity Map. Show project location, borrow and waste areas.
- ❑ Sketch plan showing proposed buildings, parking and roads superimposed on existing topography.
- ❑ Show critical clearances between proposed and existing facilities.
- ❑ Number of parking space, handicapped parking
- ❑ Access for fire trucks road provided?
- ❑ Sketch plan showing proposed locations of parking, roadways, controlled perimeter, trash containers meet the required standoff distance in accordance the latest DOD AT/FP Standards for Buildings.
- ❑ Sketch plan showing proposed buildings and existing buildings meet the required buildings separation in accordance the latest DOD AT/FP Standards for Buildings.
- ❑ AT/FP check-off list is provided.
- ❑ Plan showing existing utilities including line sizes.
- ❑ Pavement section showing materials, thickness, and compaction.
- ❑ A minimum of one section through the proposed building showing excavation lines and earthwork.

Design Analysis

Siting

- ❑ Description of the site conditions.
- ❑ Include soils report
- ❑ Statement of general soils conditions.
- ❑ Type and volume of traffic. Sketch of pavement section including materials thickness and compaction.
- ❑ Fencing.
- ❑ A general statement of storm drainage.

Sanitary

- ❑ Water- General explanation of existing system, type of proposed construction, and material. Include tentative sizes and required flows for domestic and fire flow (both interior and exterior); include hydrant test data.
- ❑ Sanitary Sewer- Explanation of existing system. Describe proposed system, material, sizes and flow volumes.

<u>CIVIL</u> Quality Control Checklist
(DETAILED CHECK)

_____
(insert design organization's name)

Preliminary Submittal (65%)

Project Name: _____

Location: _____

Project Number: _____ Date:_____

Civil Engineer:_____ QC Check By:_____

Check when complete, or mark NA if not applicable. Add comments to clarify as appropriate.

Drawings

- ❑ Site Plan (1:250) showing roads, grading, parking, utilities, survey data, method of locating buildings, slopes, drainage, and limits of construction.
- ❑ Two sections through the building (perpendicular) showing excavation lines, types of backfill, and degree of compaction requirements.
- ❑ Sketch plan showing proposed locations of parking, roadways, controlled perimeter, trash containers meet the required standoff distance in accordance with the latest DOD AT/FP Standards for Buildings.
- ❑ Sketch plan showing proposed buildings and existing buildings meet the required building separation in accordance with the latest DOD AT/FP Standards for Buildings.
- ❑ AT/FP check-off list is provided.
- ❑ Typical road section and parking lot section showing excavation limits, type of backfill, and compaction requirements.
- ❑ Typical section of utility/road crossing.
- ❑ Plan and profile of sewer lines. Typical sections and manhole details.
- ❑ All other major details such as fire hydrants, thrust blocks, valve boxes, fence details, etc.

Design Analysis

- ❑ Resubmit updated design analysis incorporating corrections resulting from previous review.
- ❑ Additional information and calculations.

<u>CIVIL</u> Quality Control Checklist
(DETAILED CHECK)

_____
(insert design organization's name)

Pre-Final Submittal (90%)

Project Name: _____

Location: _____

Project Number: _____ Date:_____

Civil Engineer:_____ QC Check By:_____

Check when complete, or mark NA if not applicable. Add comments to clarify as appropriate.

- ❑ Existing and proposed grades.
- ❑ That haul routes, disposal/borrow sites, construction contractor's storage area, construction limits, and construction staging area are shown.
- ❑ Existing utilities.
- ❑ That new underground utilities have been checked for conflicts against the site plans.
- ❑ That utility tie-in locations agree with mechanical stub out plan.
- ❑ That profile sheets show underground utilities and avoid conflicts
- ❑ That project limits and limits of clearing, grading, turfing, or mulch have been shown and are consistent with architectural and/or landscaping plans.
- ❑ That fire hydrant and power/telephone pole locations correspond with electrical and architectural drawings.
- ❑ That basis of horizontal and vertical control is given and the control points are located properly with pertinent data shown: i.e., elevations, coordinates, stationing, and/or start of construction.
- ❑ That valve boxes and manholes match final finished grades or pavement, swales or sidewalks.
- ❑ That boring locations, soil classifications, water table, and depth of rock are shown on the plans.
- ❑ That rigid pavement joint plans are shown with correct spacing.
- ❑ That foundation coordinates are shown on the foundation plan and coordinated with architectural drawings.
- ❑ That finished floor elevations match on architectural and structural drawings.
- ❑ That civil specifications are coordinated with plans.
- ❑ That storm and sewage drains from the facility have adequate capacity.

- ❑ That directions to contractors are not duplicated in plan notes and in the specifications.
- ❑ Verify the building footprint is the same as the architectural plan
- ❑ Sufficient dimensions to locate the buildings and other major constructions
- ❑ Verify that the site plans show new & existing underground utilities:
  - ❑ Power
  - ❑ Telephone
  - ❑ Water
  - ❑ Water tanks
  - ❑ Sewer
  - ❑ Gas
  - ❑ Storm drainage
  - ❑ Fuel lines
  - ❑ Grease traps
  - ❑ Fuel tanks
  - ❑ Site utility demolition requirements
  - ❑ Streams
- ❑ Check Utility Plans for:
  - ❑ Utility Line Interferences
  - ❑ Connections (both to buildings and to service)
- ❑ Verify that the items listed are shown and do not interfere with new driveways, sidewalks, or other site improvements:
  - ❑ Power/Telephone poles
  - ❑ Pole guys
  - ❑ Street signs
  - ❑ Drainage inlets
  - ❑ Valve boxes
  - ❑ Manhole castings
  - ❑ Paving
  - ❑ Contaminated soils
  - ❑ Recent spoils, embankments
- ❑ Verify that rain leaders arc connected to or drain into surface or underground site drainage (coordinate with mechanical).
- ❑ Verify that fire hydrants (and fire loops) are shown in their intended locations and that they are sufficiently dimensioned.
- ❑ Verify site lighting and street lights are shown and dimensioned (coordinate with electrical)
- ❑ Look for "dark" areas

- ❑ Valve controls
- ❑ Verify that profile sheets show existing and proposed underground utilities and that they avoid conflicts.
- ❑ Check scaled and stated dimensions on plan and profile sheets.
- ❑ Verify that existing and proposed grades are shown.
- ❑ Verify positive drainage away from the building and final drainage off the site.
- ❑ Verify the limits are shown for:
  - ❑ Fill
  - ❑ Clearing
  - ❑ Grading
  - ❑ Check roadway turn radii and pavement thickness, fire access, curbing, parking and sidewalk layouts.
  - ❑ Check ADA parking and access requirements.

B. LANDSCAPE

Quality Control Checklist
(DETAILED CHECK)

_____
(insert design organization's name)

Project Name: _____

Location: _____

Project Number: _____ Date:_____

Civil Engineer:_____ QC Check By:_____

Check when complete, or mark NA if not applicable. Add comments to clarify as appropriate.

- ❑ That the sprinklers, lighting, landscape, etc., correspond with the site limits, including the building and civil plans.
- ❑ That maintenance of landscape has been provided for in the design documents.
- ❑ Review the landscape specifications.
- ❑ Verify locations of structures & contours with the civil drawings, architectural drawings, and other landscape plans (coordinate with civil and architectural).
- ❑ Check dimensions
- ❑ Review the planting plans; ascertain appropriateness of.
  - ❑ Size
  - ❑ Type
  - ❑ Spacing
  - ❑ Leaf dropping
- ❑ Check that views to and from the facility are not inhibited.
- ❑ Verify that the planting limits are shown for:
  - ❑ Sod
  - ❑ Seeding
  - ❑ Mulch

- ❑ Verify that the depth and limits of topsoil are shown.

- ❑ Review the irrigation plans.

- ❑ Verify:
  - ❑ Adequate coverage
  - ❑ Appropriate systems
  - ❑ Over spray does not hit construction
- ❑ Check locations of controls and valve boxes.
- ❑ Verify power to (coordinate with electrical):
  - ❑ Irrigation controls
  - ❑ Pumps
  - ❑ Lighting
- ❑ Verify water connections to irrigation (coordinate with civil).
- ❑ Check that back flow preventor is shown.
- ❑ Verify accent lighting is shown.
- ❑ Verify that trees are not shown over water or sewer lines (coordinate with civil).
- ❑ Check the planting details.
- ❑ Check the site amenities layout; look for:
  - ❑ Location
  - ❑ Dimensions
- ❑ Check the site amenities details
- ❑ Check the irrigation details.
- ❑ Verify time clock location & power connections (coordinate with electrical).
- ❑ Verify that all site details are coordinated between the architectural and civil disciplines:
- ❑ Sidewalks
- ❑ Curbs
- ❑ Planter walls
- ❑ Retaining walls
- ❑ Verify tool storage location (if required).

C. <u>ARCHITECTURAL</u>

Quality Control Checklist
(DETAILED CHECK)

_____
(insert design organization's name)

Concept Submittal (35%)

Project Name: _____

Location: _____

Project Number: _____ Date:_____

Architect:_____ QC Check By:_____

Check when complete, or mark NA if not applicable. Add comments to clarify as appropriate.

Design Development

- ❑ Design meets customer needs as stated in planning documents and pre-design meetings.
- ❑ Design is within project scope as stated in planning documents.
- ❑ Proposed facility design is well-coordinated with existing adjacent development.
- ❑ Building and site development work in unison for efficient and safe access.
- ❑ Functional relationships are logical and efficient.
- ❑ Building location(s) meets all stand off and building separation requirements.
- ❑ All existing work and all new work is clearly identified.

Code Review

- ❑ Occupancy Group
- ❑ Construction Type
- ❑ Occupant Load
- ❑ Allowable area, building height, and number of stories

<u>ARCHITECTURAL</u> Quality Control Checklist
(DETAILED CHECK)

_____
(insert design organization's name)

Preliminary Submittal (65%)

Project Name: _____

Location: _____

Project Number: _____ Date:_____

Architect:_____ QC Check By:_____

Check when complete, or mark NA if not applicable. Add comments to clarify as appropriate.

Coordination

- ❑ Locations of columns, bearing walls, grid lines and overall building dimensions match structural drawings.
- ❑ Structural member locations are commensurate architecturally.
- ❑ Skylight structures are compatible with structural design.
- ❑ Chases match on structural, mechanical, plumbing, and electrical drawings.
- ❑ Architectural space requirements are commensurate with elevators, escalators, and other equipment.
- ❑ Building plan match lines are consistent on architectural, structural, mechanical, plumbing, and electrical drawings.
- ❑ Building elevations match floor plans.

Code Review

- ❑ Occupancy Group
- ❑ Construction Type
- ❑ Occupant Load
- ❑ Allowable area, building height, and number of stories
- ❑ Protection of exterior walls and openings
- ❑ Means of egress requirements
- ❑ Protection of vertical openings
- ❑ Occupancy and area separations

Drawing Review

Plans

- ❑ Spot check dimension strings on all plans, if problems occur, check all strings.
- ❑ Check plans to ensure that all existing work and all new work is clearly identified.

Exterior Elevations

- ❑ Check building elevations against floor plans.
- ❑ Check rooflines.
- ❑ Check dimensions on elevations against sections.
- ❑ Check window and door locations.

Sections and Details

- ❑ Check building heights from finish floor. Coordinate with structural.
- ❑ Check finish floor and coordinate finish grades with civil drawings.
- ❑ Verify similarity of wall sections against architectural building sections

Accessibility

- ❑ Check accessible paths and clearances.
- ❑ Check toilet room plans including the wheel chair turning space.

General

- ❑ Check for adequate and proper dimensioning, vertical and horizontal
- ❑ Look for omissions, duplications, and inconsistencies.
- ❑ Check for spelling and terminology errors.
- ❑ Check plots for clarity and readability.

Specifications

- ❑ Check to assure appropriate selection of specifications sections.
- ❑ Check to assure specifications sections selection is complete and covers all architectural materials, equipment, and systems shown in the design drawings.

ARCHITECTURAL Quality Control Checklist
(DETAILED CHECK)

_____
(insert design organization's name)

Pre-Final Submittal (90%)

Project Name: _____

Location: _____

Project Number: _____ Date:_____

Architect:_____ QC Check By:_____

Check when complete, or mark NA if not applicable. Add comments to clarify as appropriate.

Coordination

- ❑ Grading around perimeter of building matches civil drawings.
- ❑ Entries, porches, stoops, and walks match civil drawings.
- ❑ Demolition instructions are clear on what to remove and dispose of, what to remove and re-use, and what is to remain
- ❑ Elevation points match civil and structural drawings.
- ❑ Locations of columns, bearing walls, grid lines and overall building dimensions match structural drawings.
- ❑ Structural member locations are commensurate architecturally.
- ❑ Skylight structures are compatible with structural design.
- ❑ All mechanical and electrical equipment is properly supported and that all architectural features are adequately framed and connected.
- ❑ All drawings showing bridge cranes, monorails, hoists, and similar items have support details, notes, and that the locations are coordinated with the architectural, structural, mechanical, and electrical drawings. Ladders for maintenance access are provided for bridge cranes.
- ❑ Locations of expansion joints, on all floors, walls, and ceilings, match structural drawings.
- ❑ All wall construction types are identified and defined
- ❑ Fire rated walls, ceilings, doors, windows and dampers are identified
- ❑ Large-scale plans and sections match small-scale plans and sections.
- ❑ Chases match on structural, mechanical, plumbing, and electrical drawings.
- ❑ Concealed space between the ceiling and the floor or roof above is commensurate with ductwork, conduit, piping, and light fixtures.

- ❑ Equipment room or areas are commensurate with mechanical, electrical, and communications equipment.
- ❑ Architectural space requirements are commensurate with elevators, escalators, and other equipment.
- ❑ Appliances, fixtures, and equipment fit in available space.
- ❑ Building plan match lines are consistent on architectural, structural, mechanical, plumbing, and electrical drawings.
- ❑ Building elevations match floor plans.
- ❑ Building sections match elevations, plans, and structural drawings.
- ❑ Columns, beams, and slabs are identified on sections.
- ❑ Section and detail call outs are proper and cross-referenced.
- ❑ Vapor retarder has been provided as required.
- ❑ Through the wall flashing and weep holes are provided where moisture may penetrate the outer material.
- ❑ Flashing is detailed. Materials and their gauges are noted, and coordinated with the specifications.
- ❑ Miscellaneous metals are noted and coordinated with the specifications.
- ❑ Limits, types, and details of waterproofing are noted and coordinated with design documents.
- ❑ Limits, types, and details of insulation are noted and coordinated with design documents.
- ❑ Limits, types, and details of roofing are noted and coordinated with design documents.
- ❑ Roof penetrations and assemblies are located and detailed.
- ❑ Gutters and downspouts are properly detailed including expansion provisions, drained, and waterproofed
- ❑ Color finish schedules are on drawings or in specifications.
- ❑ Door and window schedule information matches plans, elevations, fire ratings, and specifications.
- ❑ Reflected architectural ceiling plans match mechanical and lighting plans.

Code Review

- ❑ Occupancy Group
- ❑ Construction Type
- ❑ Occupant Load
- ❑ Allowable area, building height, and number of stories
- ❑ Protection of exterior walls and openings
- ❑ Means of egress requirements
- ❑ Protection of vertical openings
- ❑ Occupancy and area separations

- ❑ Draft stops
- ❑ Verify locations of fire barriers and fire walls.
- ❑ Verify ratings of openings in fire barriers and fire walls.

Drawing Review

Plans

- ❑ Spot check dimension strings on all plans, if problems occur, check all strings.
- ❑ Check plans to ensure that all existing work and all new work is clearly identified.
- ❑ Check window and door opening locations.
- ❑ Check location of section and detail cuts.
- ❑ Check partial floor plans against small scale floor plans.
- ❑ Verify door opening size where large equipment and furnishings must be moved in or out.
- ❑ Verify expansion joints on plans.
- ❑ Locate and detail fire extinguishers cabinets/brackets.
- ❑ Check stair layout. Check stair length against the floor-to-floor height.
- ❑ Verify roof plan and rooftop equipment and penetration locations.
- ❑ Check roof details; ensure consistency with roofing materials, specs, and SMACNA standards.
- ❑ Check mechanical and plumbing drawings for roofing details. Coordinate with architectural drawings.

Exterior Elevations

- ❑ Check building elevations against floor plans.
- ❑ Verify expansion joints on elevations
- ❑ Check rooflines.
- ❑ Check dimensions on elevations against sections.
- ❑ Check window and door locations.
- ❑ Verify and locate all large pipes, ducts, air intake louvers, exhaust louvers, electrical cabinets, switch gears, service entrance masts, etc

Sections and Details

- ❑ Check building heights from finish floor. Coordinate with structural.
- ❑ Check finish floor and coordinate finish grades with civil drawings.
- ❑ Verify similarity of wall sections against architectural building sections
- ❑ Thoroughly check at least two wall sections on each detail sheet
- ❑ Check architectural wall sections against structural sections
- ❑ Verify that structural elements actually fit inside walls and furred-outs
- ❑ Check keyed notes.
- ❑ Check that toilet partitions are properly connected, especially vertically hung to structure above.

- ❑ Verify blocking in walls for equipment.
- ❑ Check handrail design and height.
- ❑ Check guardrail design and height.
- ❑ Check stairwell and elevator enclosures.
- ❑ Check equipment support details between architectural, structural, and mechanical plans.

Reflected Ceiling Plans

- ❑ Verify reflected ceiling plans against architectural floor plans to ensure no variance with walls.
- ❑ Check light fixture locations against lighting plans.
- ❑ Check locations of diffusers/registers against mechanical plans.
- ❑ Soffit locations
- ❑ Check against smoke alarm and other ceiling mounted items
- ❑ Check if ceiling is fire rated construction and verify details of openings to avoid compromising fire rated construction.
- ❑ Check specifications for ceiling materials and construction.

Interior Elevations and Finish Schedules

- ❑ Verify building signage:
  - ❑ Type
  - ❑ Text
  - ❑ Directory
  - ❑ Exterior signage
  - ❑ Quantity
- ❑ Verify finish schedule information including:
  - ❑ Room numbers
  - ❑ Room names
  - ❑ Finishes
  - ❑ Ceiling heights

Doors, Windows, Louvers

- ❑ Verify all door schedule information including:
  - ❑ Sizes
  - ❑ Types
  - ❑ Ratings
  - ❑ Hardware
- ❑ Check hardware schedule including hardware sets, finishes, and ratings
- ❑ Verify blocking is called out, especially at doorstops

- ❑ Check louver schedule. Coordinate with mechanical.

Accessibility

- ❑ Check accessible paths and clearances.
- ❑ Check clearances at doors.
- ❑ Check toilet room plans including the wheel chair turning space.
- ❑ Grab bars and other equipment are shown.
- ❑ Check drinking fountains for accessibility and location (coordinate location with mechanical).

General

- ❑ Check for adequate and proper dimensioning, vertical and horizontal
- ❑ Look for omissions, duplications, and inconsistencies.
- ❑ Coordinate Index Sheet with drawings.
- ❑ Check title blocks for:
  - ❑ Drawing Number
  - ❑ Invitation Number
  - ❑ Sheet Number
  - ❑ Project title
- ❑ Check for spelling and terminology errors.
- ❑ Check plots for clarity and readability.

Specifications

- ❑ Coordinate Sections 05500, 06100, 07600, 13080, 14240 with structural, mechanical, electrical sections.
- ❑ Verify materials and grades in Sections 06100, 06200.
- ❑ Coordinate Division 7 specifications sections with drawings.
- ❑ Verify Schedule in Section 08710 with Door Schedule.
- ❑ Verify that all glazing types are included in Section 08810.
- ❑ Coordinate all Division 9 specifications sections with Finish Schedule.
- ❑ Verify the Painting Schedule in Section 09900 is complete.
- ❑ Coordinate the Schedules in 10440 & 10800 with drawings.
- ❑ Spell check all sections.
- ❑ Verify all:
  - ❑ Brackets
  - ❑ References
  - ❑ Section References
- ❑ Check all Table of Contents, both Project and Section, for errors, sequences, etc.

D. STRUCTURAL

Quality Control Checklist
(DETAILED CHECK)

_____
(insert design organization's name)

Concept Submittal (35%)

Project Name: _____

Location: _____

Project Number: _____ Date:_____

Structural Engineer:_____ QC Check By:_____

Check when complete, or mark NA if not applicable. Add comments to clarify as appropriate.

- ❑ Correct names, dates, project number, spelling, etc.
- ❑ Format meets customer requirements
- ❑ Scope verified against 1391
- ❑ Overall building dimensions, type of frame, roof and floor systems.
- ❑ General description of description of the lateral load resisting system.
- ❑ List of all design loads and assumptions. (Seismic-SEAOC; Snow & Wind-ASCE 7)
- ❑ List of criteria. (AFM, TM, UBC, AISI, AISC, ACI, SJI, SDI, AWS etc.)
- ❑ Provide spec with both US & JIS references
- ❑ Name of computer programs used for analysis.

List of Outline Specifications:
- ❑ CEGS 03200 Concrete Reinforcement
- ❑ CEGS 03250 Expansion Joints, Contraction Joints, and Waterstops
- ❑ CEGS 03300 Concrete for Building Construction
- ❑ CEGS 03301 Concrete for Building Construction
- ❑ CEGS 03414 Precast Roof Decking
- ❑ CEGS 04200 Masonry
- ❑ CEGS 05055 Welding, Structural
- ❑ CEGS 05120 Structural Steel
- ❑ CEGS 05210 Steel Joists
- ❑ CEGS 05300 Steel Decking
- ❑ CEGS 05500 Miscellaneous Metal
- ❑ CEGS 07413 Metal Siding
- ❑ CEGS 13080 Seismic Protection for Mechanical, Electrical Equipment
- ❑ CEGS 13120 Standard Metal Building Systems
- ❑ CEGS 13121 Special Purpose Metal Building Systems

- ❑ CEGS 13210 Elevated Steel Water Tank

Drawing submittal:

- ❑ General design and special notes.
- ❑ Floor plan, column spacing, beams location, thickness of floor slab, and location of floor drain.
- ❑ Roof plan, spacing of joists, girders, trusses and roof decks.
- ❑ Wall section through roof, floor, and foundation indicating materials and type of construction proposed.
- ❑ Design calculations of wind load-both positive and negative wind pressures on frame, wind on walls, wind on roof, wind on wall corners, wind on roof ridges, wind on eaves, and wind on roof corners.
- ❑ Design calculation of live load-Roof snow, snowdrift and floor loads.
- ❑ Design calculation of seismic load-base shear, lateral load resisting system and contrast them with the comparable wind loads.
- ❑ Design calculations for roof and floor decks, beams, joists, girders, and columns as applicable.
- ❑ Design calculation for horizontal diaphragms and bracing to include shear transfer connections.
- ❑ Design calculations for shear walls, and exterior cladding for flexure, shear, and overturning as appropriate.
- ❑ Traffic, and unusual roof and floor dead loads.

Comments:

<u>STRUCTURAL</u> Quality Control Checklist
(DETAILED CHECK)

_____
(insert design organization's name)

Preliminary Submittal (65%)

Project Name: _____

Location: _____

Project Number: _____ Date:_____

Structural Engineer:_____ QC Check By:_____

Check when complete, or mark NA if not applicable. Add comments to clarify as appropriate.

- ❑ That the design load conditions meet or exceed the Building codes and the Design Standards.
- ❑ That the column orientation and grid lines on the structural and the architectural drawings match.
- ❑ That the load-bearing walls and the column locations match with architectural drawings.
- ❑ That the slab elevations match the architectural drawings.
- ❑ That the depressed or raised slabs are indicated and match the architectural drawings.
- ❑ That the limits of slabs on the structural drawings match the architectural drawings.
- ❑ That the expansion joints through the structural drawings match the architectural drawings.
- ❑ The footing depths and coverage with the existing and final grades.
- ❑ That the foundation piers, footings, grade beams are coordinated with schedules.
- ❑ The footing and pier locations with the new and existing utilities, trenches and tanks.
- ❑ That the foundation walls elevations are the same as on the architectural drawings.
- ❑ That the location of floor and roof framing column lines and column orientation match the foundation plan column lines and column orientation.
- ❑ That the structural perimeter floor and roof lines match the architectural drawings.
- ❑ That the section and detail call outs are proper and cross-referenced.
- ❑ That the columns, beams, and slabs are listed in schedules and are coordinated.
- ❑ That the column length, beam, and joist depths match with the architectural drawings.
- ❑ That the structural dimensions match the architectural drawings.

- ❑ That the drawing notes do not conflict with specifications.
- ❑ That the architectural construction and rustication joints are correct.
- ❑ The structural openings with the architectural, mechanical, electrical, and plumbing drawings.
- ❑ The structural joist and beam location with water closets, floor urinals, floor drains and chases.
- ❑ The structural design roof and floors for the superimposed loads, including the HVAC equipment, boilers, glass walls, etc.
- ❑ Cambers, drifts, and deflections with the architectural drawings.
- ❑ That the concentrated load points on joists do not conflict with design by other disciplines; i.e., large water lines or fire main lines.
- ❑ That horizontal and vertical bracing, ladders, stairs and framing do not interfere with doorways, piping, duct work, electrical, equipment, etc.
- ❑ That the structural fire proofing requirements are coordinated with the architectural requirements.
- ❑ Review structural specifications sections.
- ❑ Verify test piles located on drawings, and that pile driving requirements are in the notes.
- ❑ Verify column lines and column locations, and load bearing walls between structural and architectural (overlay the plans).
- ❑ Verify perimeter slab on structural matches the architectural plan.
- ❑ Verify finish floor elevations (coordinate with architectural and civil).
- ❑ Verify that all depressed or raised slab areas are shown the same as the architectural plans.
- ❑ Verify finish floor elevations are consistent with architectural.
- ❑ Verify control and expansion joints are called out, dimensioned, and detailed.
- ❑ Verify expansion joint locations against architectural.
- ❑ Verify seismic and building expansion joints are shown on architectural and extend through walls, ceilings, floors, roofs (as required).
- ❑ Verify foundation piers and footings are identified.
- ❑ Verify footing elevations.
- ❑ Verify beams are identified.
- ❑ Spot check typical and extreme beam and joist-span, depth, and spacing.
- ❑ Verify roof framing plan column lines and columns against foundation plan column lines and columns.
- ❑ Verify major column and beam lengths are listed in schedules (if applicable).

- ❑ Spot check to verify structural sections are indicated in the proper place on the plans.
- ❑ Spot check typical details and unique details (especially connections).
- ❑ Cross check several of the sections against the architectural sections.
- ❑ Verify dimensions by adding dimension strings
- ❑ Check dimensions against architectural.
- ❑ Read the general notes. Check that they coincide with the architectural notes and that materials are the same as in the architectural.
- ❑ Check that structural supports are provided for folding walls, ceilings, toilet partitions, and mechanical equipment (coordinate with architectural).
- ❑ Verify the foundation systems with soils report requirements and grading plans. Check the footings for appropriate bottom elevations, and piling locations for required capacity, cut off and tip elevations. Check rebars sizes. Verify that steel placement, anchor bolts, inserts, and anchor plates are located and dimensioned. Verify that there is sufficient clearance to install them and that proper coverage is allowed for. Check bond beams, tie beam, etc, for rebars and location. Relate them to the architectural drawings.
- ❑ Verify equipment support requirements, catwalks, railing and other inserts requiring incorporation to structural members.
- ❑ Verify mechanical openings and penetrations.
- ❑ Check slab thickness and selection for practical loading, expansion control, pouring sequence, seismic separation for completeness, detailing and/or specification inclusion.
- ❑ Verify that there are a minimum of different concrete mix strengths.
- ❑ Check that structural members are selected for imposed loads and industry standards. Avoid special conditions or shapes.
- ❑ Check that specification section 01452, Special Inspection for Seismic-Resisting Systems is included in the body of specifications.
- ❑ Check, if required, that structural components including walls, columns, beams, frames, floors, roofs, etc. are designed in accordance with the latest DOD AT/FP Standards for Buildings for blast analysis.
- ❑ Verify system selection is cost effective and within the capabilities of available labor force and geographic region.

Comments:

<u>STRUCTURAL</u> Quality Control Checklist
(DETAILED CHECK)

_____
(insert design organization's name)

Pre-Final Submittal (90%)

Project Name: _____

Location: _____

Project Number: _____ Date:_____

Structural Engineer:_____ QC Check By:_____

Check when complete, or mark NA if not applicable. Add comments to clarify as appropriate.

- ❑ Correct names, dates, project number, spelling, etc.
- ❑ Overall building dimensions, type of frame, roof and floor systems.
- ❑ Floor plan showing complete dimensions, grid lines of column, beams and designations.
- ❑ Layouts of expansion, construction or control joints and floor drains showing dimension and steel reinforcements.
- ❑ Floor slabs and floor drain showing dimensions, steel reinforcements and special surface treatment required and crossed references to proper specification sections.
- ❑ Framing section showing all required members and vertical dimensions; any additional reinforcement on large openings. Intermediate floor framing plans and stair details on multiple story structures if applicable.
- ❑ Wall section through foundations, floors, and roof framing, showing dimensions and thickness of stem wall, footings, slab, and vertical members.
- ❑ Roof plan showing dimensions and designations of joists; girders; trusses; reinforcements and thickness of roof decks.
- ❑ Final design calculations of wind load-both positive and negative wind pressures on frame, wind on walls, wind on roof, wind on wall corners, wind on roof ridges, wind on eaves, and wind on roof corners.
- ❑ Final design calculation of live load-Roof snow, snowdrift and floor loads.
- ❑ Final design calculation of seismic load-base shear, lateral load resisting system and contrast them with the comparable wind loads.
- ❑ Final design calculations for roof and floor decks, beams, joists, girders, and columns as applicable.
- ❑ Final design calculation for horizontal diaphragms and bracing to include shear transfer connections.
- ❑ Stress and deflection calculations on selected structural members.

- ❑ Final design calculations for shear walls, and exterior cladding for flexure, shear, and overturning as appropriate.
- ❑ Traffic, and unusual roof and floor dead loads.
- ❑ Complete Guide Specifications.
- ❑ Annotated review comments from 35% submittal.
- ❑ Sections and details on footing and member sizes of anchor bolts, bearing plate and rebars, etc.
- ❑ Sections and details on connection joints, bracing, etc.
- ❑ Details on crack control joints, construction joints, additional reinforcement on large opening, header beams, or any special items.
- ❑ Framing member, column, beams or truss schedules.
- ❑ Column connection details.
- ❑ Foundations schedule
- ❑ Coordinate drawings with other disciplines and with specifications.
- ❑ Final Stress (moment and shear) Calculations.
- ❑ Final Member Deflections
- ❑ Final Member Sizes
- ❑ Final Connection Calculations
- ❑ Final foundation stability and overturning moment calculations.
- ❑ List of drawings
- ❑ Complete title blocks with invitation numbers.

Comments:

E. MECHANICAL

Quality Control Checklist
(DETAILED CHECK)

_____
(insert design organization's name)

Concept Submittal (35%)

Project Name: _____

Location: _____

Project Number: _____ Date:_____

Mechanical Engineer:_____ QC Check By:_____

Check when complete, or mark NA if not applicable. Add comments to clarify as appropriate.

- ❑ Correct names, dates, project number, spelling, etc.
- ❑ Provide a general description of the project scope.
- ❑ Scope verified against RFP.
- ❑ Provide a description of all the major mechanical systems required in the project.
- ❑ List criteria, codes, manuals and directives pertinent to the project design.
- ❑ List design conditions, temperatures, "U" factors.
- ❑ Mechanical requirements for special equipment; i.e., kitchen, elevator, telephone, transformers, etc.
- ❑ List of specifications anticipated.
- ❑ Always show the North arrow on each plan
- ❑ Ensure the drawings are organized and that the plumbing and mechanical drawings are separated. Plumbing drawings shall be labeled P-XXX and mechanical drawings shall be labeled M-XXX
- ❑ Do not insert the exterior water distribution piping into the plumbing drawings. The exterior water distribution system are civil and should be inserted in the civil section.
- ❑ First run calculations – heat loss, ventilation loads, cooling loads, plumbing loads, etc.
- ❑ 35% drawings consist of: proposed layout of mechanical equipment and distribution systems – HVAC, plumbing fixtures, etc.
- ❑ Verify all mechanical systems are described in detail.
- ❑ Verify all criteria is listed and correct.

- ❑ Verify code and manual listings are correct.
- ❑ Preliminary load calculations provided: heat loss, ventilation loads, domestic cold and hot water requirements, fire water requirements, other system requirements.
- ❑ Plumbing layout coordinated with architectural layout.
- ❑ Verify outside utilities layout is coordinated with civil.
- ❑ Mechanical room layout coordinated with architectural drawings.
- ❑ Mechanical equipment locations coordinated with other disciplines.
- ❑ Mechanical electrical loads coordinated with electrical.
- ❑ That equipment schedules correspond to manufacturer's specifications and design documents.
- ❑ Verify all rooms are served by HVAC system as required.
- ❑ Verify toilet rooms have exhaust.
- ❑ Water closets are oriented on the north-south axis

Comments:

<u>MECHANICAL</u> Quality Control Checklist
(DETAILED CHECK)

_____
(insert design organization's name)

Pre-Final Submittal (90%)

Project Name: _____

Location: _____

Project Number: _____ Date:_____

Mechanical Engineer:_____ QC Check By:_____

Check when complete, or mark NA if not applicable. Add comments to clarify as appropriate.

- ❑ Design analysis complete (life cycle cost analysis included where required).
- ❑ Plumbing load calculations – hot cold water, waste water, fixture count.
- ❑ Heat Loss calculations – Conductive heat loss, infiltration, special systems losses.
- ❑ Ventilation calculations – Supply, return and exhaust air systems, special systems.
- ❑ Energy budget calculations if required by project – building losses, process loads.
- ❑ Air conditioning load calculations – cooling loads.
- ❑ POL calculations – tank sizes/pipeline sizes/pumphouses
- ❑ Fire protection calculations – water requirements, fire pumphouses, water supplies
- ❑ Utility calculations – natural gas, steam, condensate
- ❑ Calculations for other miscellaneous systems – compressed air, lube oil systems, special systems
- ❑ Other mechanical system and specialties
- ❑ Catalog cuts of equipment selected based on calculations
- ❑ Annotated comments from 35% submittal

GENERAL

- ❑ Delete notes that are shown but are not applicable to discipline scope of work. Check standard notes for clarity.
- ❑ Criteria list is complete and accurate.
- ❑ All layout plans complete with references and notes.

- ❑ All referenced details and sections are complete.
- ❑ All mechanical specifications are complete and coordinated with other disciplines. All non-applicable sections and references are deleted.
- ❑ Verify all details and section bubbles are complete and accurate.
- ❑ Verify the drawing set is complete and in order.
- ❑ All title blocks are complete and ready for signature.

HVAC and PLUMBING

- ❑ That mechanical openings match architectural and structural drawings.
- ❑ Verify utility system pressures are adequate.
- ❑ Coordinate system layouts with structures, architectural, electrical and civil to ensure mechanical equipment and distribution systems will fit within the allotted ceiling and structural spaces.
- ❑ Coordinate mechanical and electrical loads required for mechanical equipment.
- ❑ All equipment sizing plus distribution sizing of pipes and ducts.
- ❑ All equipment are properly sized and labeled.
- ❑ Mechanical room section and details are complete and cross referenced.
- ❑ All utility systems are complete – sections and details.
- ❑ Equipment schedule is complete and coordinated with mechanical and electrical plans. Motor sizes match electrical plans.
- ❑ Verify all mechanical distribution systems piping and ductwork are sized and labeled.
- ❑ Verify mechanical equipment locations are coordinated with architectural and electrical drawings.
- ❑ Typical seismic bracing for mechanical equipment.
- ❑ Typical seismic bracing for piping systems.
- ❑ That all structural supports required for mechanical equipment are indicated on drawings.
- ❑ Verify that roof penetrations (ducts, fans, vents, etc.) are indicated on architectural roof plans and structural plans.
- ❑ Verify that all penetrations are detailed for water tightness. (This is better shown on the architectural drawings.)
- ❑ Verify sizing and connections

HVAC

- ❑ Verify exterior building penetrations for ventilation system are addressed and coordinated with architectural.
- ❑ All ductwork is shown and sized.
- ❑ Verify all duct registers and grilles have been coordinated with the architectural reflected ceiling plan and the electrical lighting layout.
- ❑ Be sure vertical HVAC shafts are adequate for largest duct and are fire protected between floors.
- ❑ Verify that fire dampers are shown in ductwork layout.
- ❑ Verify controls have been coordinated with electrical.
- ❑ Check zones for logical control
- ❑ Check locations of thermostats
- ❑ Check for vibration isolation
- ❑ Verify all mechanical equipment has adequate maintenance space for removal of coils, filters, and tube bundles.

PLUMBING

- ❑ Verify all plumbing schedules are complete and match specification for type fixtures used.
- ❑ Verify all roof drains and mechanical wall/roof penetrations are coordinated with structural and architectural drawings.
- ❑ Verify all outside utilities are coordinated with civil layout.
- ❑ That floor openings, i.e., drains, water closets, etc., do not conflict with structural beams, joists, or trusses.
- ❑ Verify plumbing fixtures are coordinated with architectural.
- ❑ That roof drain details are coordinated with other trades to show the installation of sump pans in ribbed sheet metal decks, and the placement of roof insulation in and around the drainage fitting.
- ❑ Verify all fixtures are connected to water and sewer.
- ❑ Verify that each fixture drain is provided with a vent
- ❑ Verify that the floor slope is coordinated with architect to drain to floor drains
- ❑ Verify that floor drains are provided for electric hot water heaters
- ❑ Verify plumbing plans against architectural plans; include casework (verify fixtures will fit in casework).
- ❑ Check rain leader system against architectural roof plan and civil plan.

- ❑ Verify wall chases are provided on architectural to conceal vertical piping. Verify adequate wall thickness.
- ❑ Verify that EWC's water fountains have water, drain connections (repeated in architectural).

POL

- ❑ All POL systems are complete – tank sizing and piping, details/sections.
- ❑ All POL details are complete and cross referenced.

Comments:

F. FIRE PROTECTION

Quality Control Checklist
(DETAILED CHECK)

_____
(insert design organization's name)

Fire Protection General Checklist for Design and Review

Project Name: _____

Location: _____

Project Number: _____ Date:_____

Mechanical Engineer:_____ QC Check By:_____

Check when complete, or mark NA if not applicable. Add comments to clarify as appropriate.

- ❑ Provide detailed hydraulic calculations that verifies that the water supply is sufficient to meet the fire protection system demand.
- ❑ Ensure that a complete riser diagram is shown.
- ❑ Ensure that all piping from the point of connection to the existing, to the top of sprinkler riser(s) is shown on the drawings.
- ❑ Ensure that all valves, fire department connections, and inspector's test connections indicated on drawings.
- ❑ Ensure that sprinkler main drain piping and discharge point are shown and detailed. Main drains should discharge directly to the outside.
- ❑ Ensure that the extent or limit of each type of sprinkler system, each design density, each type and temperature rating of sprinkler heads, and location of concealed piping is clearly specified or shown.
- ❑ Ensure that water-filled sprinkler piping is not subject to freezing.
- ❑ Provide detail of the sprinkler piping entry into the building, and include details of anchoring and restraints.
- ❑ Ensure that aesthetics considerations are incorporated in the design of the sprinkler system, e.g. sprinkler piping is concealed in finished areas and recessed chrome-plated pendent sprinkler heads are used in finished area.
- ❑ Ensure that paddle-type water flow switches are only used in wet-pipe sprinkler systems. The other sprinkler systems shall use pressure-type flow switches.
- ❑ Ensure that the main sprinkler control valves are accessible from the outside.
- ❑ Ensure that fire rating of fire-rated walls, partitions, floors, shafts, and doors are

indicated.

- ❑ Ensure that the location of required fire dampers are shown.
- ❑ Ensure that the location of all fire alarm indicating devices, pull stations, waterflow switches, detectors and other fire alarm and supervisory devices are indicated on the drawings.
- ❑ Ensure that the connection of the fire alarm and detection system to the base-wide fire alarm system is clearly shown and detailed.

Comments:

G. ELECTRICAL

Quality Control Checklist
(DETAILED CHECK)

_____
(insert design organization's name)

Concept Submittal (35%):

Project Name: _____

Location: _____

Project Number: _____ Date:_____

Electrical Engineer:_____ QC Check By:_____

Check when complete, or mark NA if not applicable. Add comments to clarify as appropriate.

General

- ❑ Verify electrical documents are coordinated with similar activities in other disciplines.
- ❑ Verify symbol legend is shown. Check legend with plan symbols for consistency.
- ❑ Verify drawings are legible at half-size.

Site

- ❑ Verify all existing above grade circuits in the proposed area of construction are shown. Check pole height, class, and location, conductor/cable voltage, quantity, size, and type, and location of guys, transformers, pole top switches, risers, light fixtures, and other pole mounted equipment.
- ❑ Verify all existing underground circuits in the proposed area of construction are shown. Check conductor/cable voltage, quantity, size, and type, conduit size and type, manhole/ handhole location, transformer location, voltage, size and type, pedestal location, lighting location, and other devices associated with the underground system.
- ❑ Verify all proposed electrical power services and changes to existing electrical utilities are shown. Check poles, transformers, switches, pedestals, ducts, conduits, manholes/handholes, above and below grade circuits, and other service related equipment, complete with type, size and ratings, with the exception that manhole/handholes need not be sized.
- ❑ Verify all proposed area/street lighting structures are shown. Check approximate location, pole type and height, luminaire style, lamp type and wattage.
- ❑ Verify locations and descriptions of all other proposed exterior devices are shown, such as remote telephone, television, headbolt heater posts, fire alarm, emergency shut-off, lift station, pump, and dispenser device.

Lighting

- ❑ Verify all interior lighting luminaires and wall switch / occupancy sensor locations are shown. Check that each luminaire type keys to the luminaire schedule.

- ❑ Verify luminaire schedule is shown.

Power

- ❑ Verify all existing and proposed power distribution equipment locations and ratings in the area of construction are shown. Check main and sub-power panels, transformers, transfer switches, generators, and other devices that constitute the electrical distribution system.

- ❑ Verify all proposed general purpose receptacles and special electrical power outlets are shown. Check outlet locations and ratings.

- ❑ Verify proposed power one-line/riser diagram, from point of connection to existing system to sub-feeder panels. Check equipment and circuit sizes from connection point to existing system to, and including, the main distribution panel.

Communications

- ❑ Verify all existing and proposed telephone backboard/cabinet and outlet locations in the area of construction are shown.

- ❑ Verify all proposed television outlets, distribution panels, and headend equipment locations are shown.

- ❑ Verify all proposed public address outlets, distribution panels, and headend equipment locations are shown.

- ❑ Verify proposed main telephone backboard/cabinet elevations are shown, including entrance terminal, cable terminal blocks, general purpose receptacle, grounding, and other equipment or reserved spaces.

- ❑ Verify fire alarm panel, remote graphic annunciator panel, fire alarm transmitter, thermal and products of combustion detectors, pull stations, horns and strobes, and other control devices are shown. Check locations with Fire Department and Code requirements.

- ❑ Verify telephone one-line/riser diagram is shown, from point of connection to new backboard/cabinets. Check cable and duct information.

- ❑ Verify television one-line/riser diagram is shown, from connection point to new distribution panels.

- ❑ Verify public address one-line diagram is shown. Check if multiple channels/systems meet the needs of the user.

Design Analysis Narrative

- ❑ Verify the statement of summarized electrical project scope is accurate.

- ❑ Verify a written confirmation that the design conforms to the project scope is included.

- ❑ Verify a description of power supply at point of delivery is included. Check for statement of adequacy and proposed measures if existing supply is inadequate.

- ❑ Verify characteristics of the primary extension are included.

- ❑ Verify electrical characteristics (phase, voltage, number and size of wires) are indicated, with justification for the type of proposed system.

- ❑ Verify panelboard types, protective devices, loading of circuits, voltage drop of service and feeders and circuits are described. Confirm 25 percent spare capacity is indicated for each panelboard.

- ❑ Verify lighting system and power requirements are described.

- ❑ Verify communication systems, including but not limited to data, telephone, television, public address, and clock, are described.

- ❑ Verify safety systems, including but not limited to fire alarm and cardkey access, are described.

- ❑ Verify additional project criteria are listed as applicable.

- ❑ Verify intensity and type of proposed exterior lighting is indicated.

Calculations

- ❑ Verify estimate of total connected load and resulting demand is included.

Specifications

- ❑ Verify a list of guide specs is provided. Check outline of specifications proposed for which guide specs are not available suits the project parameters.

<u>ELECTRICAL</u> Quality Control Checklist
(DETAILED CHECK)

_____
(insert design organization's name)

Preliminary Submittal (65%):

Project Name: _____

Location: _____

Project Number: _____ Date:_____

Electrical Engineer:_____ QC Check By:_____

Check when complete, or mark NA if not applicable. Add comments to clarify as appropriate.

- ❑ **General**
- ❑ Verify electrical documents are coordinated with similar activities in other disciplines.
- ❑ Verify all remarks from the 30 percent design phase have been addressed.
- ❑ Verify names, dates, project number, spelling, etc. are correct.

Site

- ❑ Verify exterior electrical details are shown.
- ❑ Verify area/street lighting point-by-point lighting level, pole sizing, and branch circuit voltage drop calculations are accurate.

Lighting

- ❑ Verify lighting plans show switch legs and that branch circuiting is in progress.

Power

- ❑ Verify Power plans show branch circuiting in progress.
- ❑ Verify sizes of major equipment.
- ❑ Verify panel schedules are in progress.
- ❑ Verify proposed power one-line/riser diagram is shown, from point of connection to existing system to sub-feeder panels. Check equipment and circuit sizes from connection point to existing system to, and including, the main distribution panel.

Communications

- ❑ Verify communication and safety plans are shown and accurately reflect the project scope.
- ❑ Verify one line diagrams are shown.
- ❑ Verify fire alarm sequence of operation is delineated.

Design Analysis Narrative

- ❑ Verify the updated design analysis is submitted, incorporating corrections resulting from the previous review.

Calculations

- ❑ Verify any additional information affecting calculations and criteria is submitted.

Specifications

- ❑ Verify mark-ups of each section of the specifications used is submitted.
- ❑ Verify specifications developed for equipment which has no guide specs.

:

ELECTRICAL Quality Control Checklist
(DETAILED CHECK)

_____
(insert design organization's name)

Pre-Final Submittal (90%):

Project Name: _____

Location: _____

Project Number: _____ Date:_____

Electrical Engineer:_____ QC Check By:_____

Check when complete, or mark NA if not applicable. Add comments to clarify as appropriate.

General

- ❑ Verify electrical documents are complete.
- ❑ Verify electrical documents are coordinated with similar activities in other disciplines.
- ❑ Verify all remarks from the previous design phase have been addressed.
- ❑ Verify names, dates, project number, spelling, etc. are correct.
- ❑ Verify electrical plans match architectural, mechanical, plumbing and structural.
- ❑ Verify conduit chase locations match with architectural and structural drawings.
- ❑ Verify compatibility of conduit and light fixtures with architectural space and that no conflicts exist with duct, piping, or structure.
- ❑ Verify electrical equipment structural requirements are met.
- ❑ Verify electrical equipment room fits architectural space, with clearance for safety and maintenance.
- ❑ Verify the standard notes on the drawings are consistent with the project scope.
- ❑ Verify keyed notes are properly numbered and that they are consistent with the project scope.
- ❑ Verify the design analysis is resubmitted with any and all corrections from the previous review included.
- ❑ Verify annotated comments from previous review are submitted.

Site

- ❑ Verify incoming electrical service clearly delineates responsibility for installation.

- ❑ Verify the notes for utility company installations are coordinated.
- ❑ Verify proper site installation details are shown.
- ❑ Verify the exterior service transformer has an additional grounding connection at the transformer.
- ❑ Verify exterior lighting and controls are accurate and consistent with the project scope.
- ❑ Verify sufficient security lighting is provided for walks, parking, and buildings.

Lighting

- ❑ Verify luminaires in the fixture schedule correspond to the design analysis and, if used, to current manufacturer's model numbers.
- ❑ Verify light fixture spacing and locations eliminate dark spots and meet illumination requirements.
- ❑ Verify lighting levels and luminaire types are consistent with room functions.
- ❑ Verify lighting plans are coordinated with architectural reflected ceiling plans, mechanical diffuser locations, and duct clearances above fixtures.
- ❑ Verify all rooms and spaces have lighting.
- ❑ Verify exit and egress lighting is consistent with military standards, codes and regulations.
- ❑ Verify circuit numbers on the plans are crosschecked with panel schedule circuit numbering and load descriptions.

Power

- ❑ Verify electrical connections are shown for equipment, i.e., mechanical motors, heat strips, etc., architectural, overhead doors, stoves, dishwashers, etc.
- ❑ Verify electrical horsepower, voltage, phasing for all motors match on mechanical and architectural designs.
- ❑ Verify the location of duplex outlets, telephone and data outlets, fire alarm devices, clock outlets, etc., have been coordinated with architectural millwork and finishes.
- ❑ Verify the limits and confines where conduits may be run have been established.
- ❑ Verify seismic bracing details are provided and that seismic flexible coupling locations are shown or specified.
- ❑ Verify interior transformers are grounded to building steel and the bonding to neutral is consistent, either at the transformer, at the disconnect switch, or at the panelboard.
- ❑ Verify proper service and equipment ground sizing is shown.
- ❑ Verify main electrical switchgear shows proper physical and electrical sizing.
- ❑ Verify the proper ampacity of service equipment.

- ❑ Verify proper clearances for switchgear, panelboards, and transformers.
- ❑ Verify proper requirements for ground fault protection.
- ❑ Verify code required protection on primary and secondary side of transformers.
- ❑ Verify service and branch panel conductor ampacities for correctness.
- ❑ Verify main service conductor ampacity and associated conduits for correctness.
- ❑ Verify all branch panel feeder conductor ampacities in accordance with load calculations and breaker protection.
- ❑ Verify branch panelboards show the correct voltage, ampacity, circuit breaker sizes, and load designations.
- ❑ Verify location of panels on architectural or electrical drawings; verify sufficient clearance.
- ❑ Verify calculated ampacity loads are consistent with panel size, main breaker, etc.
- ❑ Verify panel mounting in or on walls (surface or recessed) is consistent between the floor plans and schedules. Verify the integrity of fire-rated walls is maintained for recessed panels.
- ❑ Verify 25 percent spares and spaces in switchgear and panelboards for future expansion.
- ❑ Verify power connections and connector types match the utilization equipment that they serve.
- ❑ Verify responsibility for starters/disconnects and variable frequency drives for mechanical equipment is properly coordinated.
- ❑ Verify proper coordination of required power connections to mechanical equipment with mechanical drawings, including mechanical control systems.
- ❑ Verify additional power connections required by other trades-kitchen equipment-architectural type devices (screens, power doors, power hoist elevators, etc) are shown.
- ❑ Verify circuit numbers on the plans are crosschecked with panel schedule circuit numbering and load descriptions.

Communications

- ❑ Verify location of speakers match the reflected ceiling plans.
- ❑ Verify speakers, clocks, etc., schedules correspond to a manufacturer’s description and design documents.
- ❑ Verify site electrical and telephone service requirements have been coordinated with supply utility requirements.

Calculations

- ❑ Verify load calculations are accurate.
- ❑ Verify fault current requirements are accurate.

- ❑ Verify primary and secondary voltage drop calculations are included.

Specifications

- ❑ Verify manufactured equipment series and model numbers, if used, are current.
- ❑ Verify specifications are complete.
- ❑ Verify all specialty systems specifications are complete.
- ❑ Verify general coordination is complete with other disciplines, esp. mechanical controls.
- ❑ Verify applicable specification sections; remove non-applicable sections or references.
- ❑ Verify specifications are proofread for spelling and typing errors, incomplete sentences, and punctuation errors.
- ❑ Verify each specification section is edited to delete materials or methods not required in the project.
- ❑ Verify all referenced publications in the publication reference are listed at the front of each section.
- ❑ Verify all materials and/or methods required for completion of the project are covered in the specifications.
- ❑ Verify the bid schedule agrees with the requirements of the scope of work.
- ❑ Verify drawings reflect the latest additives.

H. SPECIFICATIONS

Quality Control Checklist
(DETAILED CHECK)

_____
(insert design organization's name)

Project Name: _____

Location: _____

Project Number: _____ Date:_____

Architect/Engineer:_____ QC Check By:_____

Check when complete, or mark NA if not applicable. Add comments to clarify as appropriate.

- ❑ That construction phasing is clear.
- ❑ That cross-referenced specifications and drawings are numbered correctly.
- ❑ That thickness and quantities of materials shown on plans agree with specifications.
- ❑ That all items of material or equipment are covered by adequate specifications, including those not covered by CEGS.
- ❑ That all shop drawings and material certifications to be submitted are listed in the submittal register.
- ❑ That asbestos abatement and quantities are included in specs and on bid schedule.
- ❑ That Government-Furnished Materials (GFM) are identified.
- ❑ That references to test methods, material specs, or other manuals are consistent with civil or Military designations, as applicable.
- ❑ That temporary dust control measures are outlined.
- ❑ Make an overview of the specifications.
- ❑ All sections included and in proper sequence.
- ❑ Check specs for bid items (or alternates).
- ❑ Check that description is adequate, consistent, and payment method is specified Are they coordinated with and shown on the drawings?
- ❑ Check specs for phasing of construction-Are the phases clear and consistent with the drawings.
- ❑ Check drawings to ensure specification coverage on such items as the following.

- ❑ Fencing, including gates, swing type or slide, manually or electrically operated.
- ❑ Stock piling of usable earth or recyclable paving materials, topsoil disposition and clean up.
- ❑ Site access, haul roads and possible restricted work periods, contractors lay-down areas etc.
- ❑ Remove non-applicable or duplicated references, material listings, sub-paragraphs, etc.
- ❑ Check for disposition of "Salvage", "Relocate", "Contractor Set", "Owner Furnished".
- ❑ Verify that earthwork materials and execution requirements agree with criteria, soils report requirements and grading plans.

I. COST ESTIMATING

Quality Control Checklist
(DETAILED CHECK)

_____
(insert design organization's name)

Project Name: _____

Location: _____

Design Submittal: (Identify 35%, 90%, etc.)

Project Number: _____ Date:_____

Architect/Engineer: _____ QC Check By: _____

Check when complete, or mark NA if not applicable. Add comments to clarify as appropriate.

- ❑ Estimates are based on current scope of work in plans and specifications and prepared in accordance with Engineering Instruction EI01D010 Construction Cost Estimates.
- ❑ Estimates are developed using vendor quotations, available local reference books and approved construction publications in Japan.
- ❑ Estimates are prepared in accordance with latest Balance of Payments (BOPP) procedures and non-exempt materials are identified by asterisk in the estimates.
- ❑ BOPP analysis/determination statement is provided in the estimates.
- ❑ The Project Manager (PM) provided the Program Amount (PA) and it was compared to the Current Working Estimate (CWE). If the CWE exceeds the PA, the PM was advised.
- ❑ Estimates conform to bidding schedule, payment schedules and construction schedules.
- ❑ A Weighted Guidelines Method was used to determine the profit for the estimate in accordance with Engineering Instruction EI01D010.
- ❑ The applicable exchange rate is used for this project.
- ❑ Estimates have been checked for math errors.
- ❑ Estimates have been checked for conformance to special requirements and construction schedule.
- ❑ Estimates are separated by New Construction Work (Type L), Repair Work (Type K), and Maintenance (Type M) for Operation and Maintenance (O & M) projects. The New Construction Work statutory limitations do not exceed $750,000 (CWE). If so, the PM is advised that the CWE exceeds the statutory limit.
- ❑ Estimates are separated by funding source, if applicable. For example, DECA projects require estimates be separated by DBOF and Surcharge.

- ❑ Estimates have been prepared using applicable IDIQ labor rates.
- ❑ A draft DD Form 1354 Real Estate Transfer document was completed at the final design stage in accordance with the DD Form 1354 Users Handbook, 1 Dec 2002 (http:/www.hq.usace.army.mil/ISD/)
- ❑ Review comments from the government cost engineer have been addressed.

J. COMPUTER AIDED DRAFTING (CAD)

Quality Control Checklist
(DETAILED CHECK)

_____
(insert design organization's name)

Project Name: _____

Location: _____

Design Submittal: (Identify 35%, 90%, etc.)

Project Number: _____ Date:_____

CAD Draftsman: _____ QC Check By: _____

Check when complete, or mark NA if not applicable. Add comments to clarify as appropriate.

- ❑ Ensure font size and fonts conform to the A/E/C CADD Standards.
- ❑ Ensure standard drawing sheets conform to the A/E/C CADD Standards.
- ❑ Verify revision schedule is included on the title sheet or following sheet. This Revision schedule is separate from the Revision block that is located on the border of the sheet.
- ❑ When submitting Cal files, verify line weights and line types are the same as the CADD File
- ❑ The file name for the Cal file shall be as shown: A-1 will be numbered as A01.cal, A-2 will be numbered as A02.cal, Double digit sheets will be numbered as shown; A-10 will be numbered as A10.cal, A-11 will be numbered as A11.cal
- ❑ Ensure a text file, listing all drawings is created and submitted.
- ❑ Are all documents logically ordered and a table of contents provided?
- ❑ Have all documents been signed and dated? Are there initials and dates in title blocks?
- ❑ Are the scale and orientation of the drawings consistent throughout the complete set of drawings?
- ❑ Is there similar nomenclature throughout the drawings?
- ❑ Ensure lettering size is minimum 1/8" height.
- ❑ Ensure legibility of notes.

K. DESIGN ANALYSIS

Quality Control Checklist
(DETAILED CHECK)

_____
(insert design organization's name)

Project Name: _____

Location: _____

Design Submittal: (Identify 35%, 90%, etc.)

Project Number: _____ Date:_____

Architect/Engineer: _____ QC Check By: _____

Check when complete, or mark NA if not applicable. Add comments to clarify as appropriate.

- ❑ All disciplines are covered
  - ❑ Drawings Clear and Concise
  - ❑ Specifications Clear, Concise, and Up-to-Date
  - ❑ Specifications of Unusual Items
  - ❑ Site Design
  - ❑ Geotechnical Design
  - ❑ Civil Design
  - ❑ Architectural Design
  - ❑ Structural Design
  - ❑ Mechanical Design
  - ❑ Electrical Design
  - ❑ Coordination among Disciplines
- ❑ Applicable Lessons Learned are included.
- ❑ That SOW shown in the design submission has been checked against the official 1391 and current design directive.

ACQUISITION INSTRUCTIONS

AI 25.1103-109
MEDICAL SCREENING AND VACCINATION REQUIREMENTS FOR LOCALLY HIRED EMPLOYEES (MAR 2009)

(a) Contractors, and subcontractors at any tier shall ensure and provide satisfactory evidence that all locally hired employees, including Local National (LN), Third Country National, and U.S. employees, working on military have been screened for and do not currently have active tuberculosis (TB).
(1) Contractors may utilize a testing method of either a chest x-ray or TB skin test (TST).
(i) Chest x-rays shall be taken and TBTs administered within 90 days prior to the start of employment.
(ii) Screening may be performed either by a licensed medical provider from the local economy or by contractors' licensed medical staffs. Contractors shall maintain medical screening documentation and make it available to the Contracting Officer upon request.
(2) TB screening documentation will be required by the responsible Base Defense Operations Center (BDOC) prior to issuance of base access badges.
(b) Contractor employees, including subcontractors at any tier, who work in positions where they are working with food or water production and distribution shall have current Typhoid and Hepatitis "A" (full series) vaccinations, in addition to the TB tests required above.
(a) At least the first inoculation in the Hepatitis "A" series must be given prior to the start of employment, with continuation and completion of the inoculation series. The Typhoid inoculation must be completed within two years prior to the date of employment in the food and water service capacity.
(i) Once the complete Hepatitis "A" vaccination series is completed, it does not have to be repeated. The Typhoid vaccination requires a booster immunization every three years.
(ii) Proof of individual employee vaccinations shall be provided to the Contracting Officer and maintained by the Contractor for examination by the Contracting Officer.

(End of Requirement)

AI 25.1103-104
COMPLIANCE WITH LAWS AND REGULATIONS (MAR 2009)

(a) The Contractor shall comply with, and shall ensure that its employees and its subcontractors and their employees, at all tiers, are aware of and obey all U.S. and Host Nation laws, Federal or DoD regulations, and Central Command orders and directives applicable to personnel in Iraq and Afghanistan, including but not limited to USCENTCOM, Multi-National Force and Multi-National Corps operations and fragmentary orders, instructions, policies and directives.
(b) Contractor employees shall particularly note all laws, regulations, policies, and orders restricting authority to carry firearms, rules for the use of force, and prohibiting sexual or aggravated assault. Contractor employees are subject to General Orders Number 1, as modified from time to time, including without limitation, their prohibition on privately owned firearms, alcohol, drugs, war souvenirs, pornography and photographing detainees, human casualties or military security measures.
(c) Contractor employees may be ordered removed from secure military installations or the theater of operations by order of the senior military commander of the battle space for acts that disrupt good order and discipline or violate applicable laws, regulations, orders, instructions, policies, or directives. Contractors shall immediately comply with any such

order to remove its contractor employee.
(d) Contractor employees performing in the USCENTCOM Area of Operations (AOR) may be subject to the jurisdiction of overlapping criminal codes, including, but not limited to, the Military Extraterritorial Jurisdiction Act (18 U.S.C. Sec. 3261, et al) (MEJA), the Uniform Code of Military Justice (10 U.S.C. Sec. 801, et al)(UCMJ), and the laws of the Host Nation. Non-US citizens may also be subject to the laws of their home country while performing in the USCENTCOM AOR. Contractor employee status in these overlapping criminal jurisdictions may be modified from time to time by the United States, the Host Nation, or by applicable status of forces agreements.
(e) Under MEJA, a person who engages in felony misconduct outside the United States while employed by or accompanying the Armed Forces is subject to arrest, removal and prosecution in United States federal courts. Under the UCMJ, a person serving with or accompanying the Armed Forces in the field during a declared war or contingency operation may be disciplined for a criminal offense, including by referral of charges to a General Court Martial. Contractor employees may be ordered into confinement or placed under conditions that restrict movement within the AOR or administratively attached to a military command pending resolution of a criminal investigation.
(f) Contractors shall immediately notify military law enforcement and the Contracting Officer if they suspect an employee has committed an offense. Contractors shall take any and all reasonable and necessary measures to secure the presence of an employee suspected of a serious felony offense. Contractors shall not knowingly facilitate the departure of an employee suspected of a serious felony offense or violating the Rules for the Use of Force to depart Iraq or Afghanistan without approval from the senior U.S. commander in the country.

(End of Requirement)

AI 22.1705-100
PROHIBITION AGAINST HUMAN TRAFFICKING, INHUMANE LIVING CONDITIONS, AND WITHHOLDING OF EMPLOYEE PASSPORTS (MAR 2009)

(a) All contractors (“contractors” refers to both prime contractors and all subcontractors at all tiers) are reminded of the prohibition contained in Title 18, United States Code, Section 1592, against knowingly destroying, concealing, removing, confiscating, or possessing any actual or purported passport or other immigration document, or any other actual or purported government identification document, of another person, to prevent or restrict or to attempt to prevent or restrict, without lawful authority, the person’s liberty to move or travel, in order to maintain the labor or services of that person, when the person is or has been a victim of a severe form of trafficking in persons.
W912ER-09-R-0027
Page 191 of 199
(b) Contractors are also required to comply with the following provisions:
(1) Contractors shall only hold employee passports and other identification documents discussed above for the shortest period of time reasonable for administrative processing purposes.
(2) Contractors shall provide all employees with a signed copy of their employment contract, in English as well as the employee’s native language that defines the terms of their employment/compensation.
(3) Contractors shall not utilize unlicensed recruiting firms, or firms that charge illegal recruiting fees.
(4) Contractors shall be required to provide adequate living conditions (sanitation, health, safety, living space) for their employees. Fifty square feet is the minimum acceptable square footage of personal living space per employee. Upon contractor’s

written request, contracting officers may grant a waiver in writing in cases where the existing square footage is within 20% of the minimum, and the overall conditions are determined by the contracting officer to be acceptable. A copy of the waiver approval shall be maintained at the respective life support area.
(5) Contractors shall incorporate checks of life support areas to ensure compliance with the requirements of this Trafficking in Persons Prohibition into their Quality Control program, which will be reviewed within the Government's Quality Assurance process.
(6) Contractors shall comply with international laws regarding transit/exit/entry procedures, and the requirements for work visas. Contractors shall follow all Host Country entry and exit requirements.
(c) Contractors have an affirmative duty to advise the Contracting Officer if they learn of their employees violating the human trafficking and inhumane living conditions provisions contained herein. Contractors are advised that contracting officers and/or their representatives will conduct random checks to ensure contractors and subcontractors at all tiers are adhering to the law on human trafficking, humane living conditions and withholding of passports.
(d) The contractor agrees to incorporate the substance of this clause, including this paragraph, in all subcontracts under his contract.

(End of Requirement)

AI 23.1000-100
REPORTING KIDNAPPINGS, SERIOUS INJURIES AND DEATHS
(MAR 2009)

Contractors shall notify the Contracting Officer, as soon as practicable, whenever employee kidnappings, serious injuries or deaths occur.
Report the following information:

Contract Number:
Contract Description & Location:
Company Name:
Reporting party:
Name:
Phone number:
e-mail address:
Victim:
Name:
Gender (Male/Female):
Age:
Nationality:
Country of permanent residence:
Incident:
Description:
Location:
Date and time:
Other Pertinent Information:

(End of Requirement)

AI 25.1103-2

ARMED PERSONNEL INCIDENT REPORTS (MAR 2009)

(a) All contractors and subcontractors in the Multi-National Forces-Iraq (MNF-I) or Combined Joint Task Force (Afghanistan) theater of operations shall comply with and shall ensure that their personnel supporting MNF-I or CJTF forces are familiar with and comply with all applicable orders, directives, and instructions issued by the respective MNF-I or CJTF Commanders relating to force protection and safety.
(b) **IRAQ**: Contractors shall provide all incidents and use of weapons firing incidents to the MNC-I Contractor Operations Cell (CONOC) as soon as practical, based upon the situation, and submit a written report to CONOC within 4 hours. The initial report shall include the name of the company, location of the incident, time when the incident occurred, a brief description of the events leading up to the incident, and a company point of contact. A follow-up, comprehensive written report shall be provided to the CONOC within 96 hours of the incident. Reports shall be submitted to CONOC at: mncic3conoc@iraq.centcom.mil;, DSN 318-435-2369; Iraqna 0044 203 286 9851 or 0044 203 239 5894; or Skype: MNCICONOC.
(c) **AFGHANISTAN**: Contractors shall report all incidents and use of weapons through their Contracting Officers who will notify the JOC Watch at Bagram AB. (JOC SHIFT DIRECTOR, DSN: 318-431-4116; SVOIP: 431-7108) Information should include: the name of the company, where the incident occurred, time when the incident occurred, a brief description of the events leading up to the incident, and a point of contact for the company. The JOC Watch duty officer will issue guidance for further reporting requirements.
(d) Contractors shall provide first aid and request MEDEVAC of injured persons, and remain available for U.S. or Coalition response forces, based upon the situation. In the event contractor personnel are detained by U.S. or Coalition Forces, prolonged detention due to lack of proper identification can be alleviated by contractor personnel possessing on their person information that includes the contractor's name, the contract number, a contractor management POC, and the phone number of the CONOC/JOC Watch.

(End of Requirement)

AI 25.1103-103
FITNESS FOR DUTY AND MEDICAL/DENTAL CARE LIMITATIONS (MAR 2009)

(1) The contractor shall perform the requirements of this contract notwithstanding the fitness for duty of deployed employees, the provisions for care offered under this section, and redeployment of individuals determined to be unfit. The contractor bears the responsibility for ensuring all employees are aware of the conditions and medical treatment available at the performance. The contractor shall include this information and requirement in all subcontracts with performance in the theater of operations.
(2) The contractor shall not deploy an individual with any of the following conditions unless approved by the appropriate CENTCOM Service Component (ie. ARCENT, AFCENT, etc.) Surgeon: Conditions which prevent the wear of personal protective equipment, including protective mask, ballistic helmet, body armor, and chemical/biological protective garments; conditions which prohibit required theater immunizations or medications; conditions or current medical treatment or medications that contraindicate or preclude the use of chemical and biological protectives and antidotes; diabetes mellitus, Type I or II, on pharmacological therapy; symptomatic coronary artery disease, or with myocardial infarction within one year prior to deployment, or within six months of coronary artery bypass graft, coronary artery

angioplasty, or stenting; morbid obesity (BMI >/= 40); dysrhythmias or arrhythmias, either symptomatic or requiring medical or electrophysiologic control; uncontrolled hypertension, current heart failure, or automatic implantable defibrillator; therapeutic anticoagulation; malignancy, newly diagnosed or under current treatment, or recently diagnosed/treated and requiring frequent subspecialist surveillance, examination, and/or laboratory testing; dental or oral conditions requiring or likely to require urgent dental care within six months' time, active orthodontic care, conditions requiring prosthodontic care, conditions with immediate restorative dentistry needs, conditions with a current requirement for oral-maxillofacial surgery; new onset (< 1 year) seizure disorder, or seizure within one year prior to deployment; history of heat stroke; Meniere's Disease or other vertiginous/motion sickness disorder, unless well controlled on medications available in theater; recurrent syncope, ataxias, new diagnosis (< 1year) of mood disorder, thought disorder, anxiety, somotoform, or dissociative disorder, or personality disorder with mood or thought manifestations; unrepaired hernia; tracheostomy or aphonia; renalithiasis, current; active tuberculosis; pregnancy; unclosed surgical defect, such as external fixeter placement; requirement for medical devices using AC power; HIV antibody positivity; psychotic and bipolar disorders. (Reference: Mod 8 to USCENTCOM Individual Protection and Individual/Unit Deployment Policy, PPG-Tab A: Amplification of the Minimal Standards of Fitness for Deployment to the CENTCOM AOR).

(3) In accordance with military directives (DoDI 3020.41, DoDI 6000.11, CFC FRAGO 09-1038, DoD PGI 225.74), resuscitative care, stabilization, hospitalization at Level III (emergency) military treatment facilities and assistance with patient movement in emergencies where loss of life, limb or eyesight could occur will be provided. Hospitalization will be limited to emergency stabilization and short-term medical treatment with an emphasis on return to duty or placement in the patient movement system. Subject to availability at the time of need, a medical treatment facility may provide reimbursable treatment for emergency medical or dental care such as broken bones, lacerations, broken teeth or lost fillings.

(4) Routine and primary medical care is not authorized. Pharmaceutical services are not authorized for routine or known, routine prescription drug needs of the individual. Routine dental care, examinations and cleanings are not authorized.

(5) Notwithstanding any other provision of the contract, the contractor shall be liable for any and all medically-related services or transportation rendered. In accordance with OUSD(C) Memorandum dated 4 June 2008, the following reimbursement rates will be charged for services at all DoD deployed medical facilities. These rates are in effect until changed by DoD direction.

(a) Inpatient daily rate: $2,041.00. Date of discharge is not billed unless the patient is admitted to the hospital and discharged the same day.

(b) Outpatient visit rate: $195.00. This includes diagnostic imaging, laboratory, pathology, and pharmacy provided at the medical facility.

(End of Requirement)

MONTHLY CONTRACTOR CENSUS REPORTING (MAR 2009)

Contractor shall provide monthly employee census information to the Contracting Officer, by province, for this contract. Information shall be submitted either electronically or by hard-copy. Information shall be current as of the 25th day of each month and received by the Contracting Officer no later than the first day of the following month. The following information shall be provided for each province in which work was performed:
(1) The total number (prime and subcontractors at all tiers) employees.
(2) The total number (prime and subcontractors at all tiers) of U.S. citizens.
(3) The total number (prime and subcontractors at all tiers) of local nationals (LN).
(4) The total number (prime and subcontractors at all tiers) of third-country nationals (TCN).
(5) Name of province in which the work was performed.
(6) The names of all company employees who enter and update employee data in the Synchronized Predeployment & Operational Tracker (SPOT) IAW DFARS 252.225-7040 or DFARS DOD class deviation 2007-O0010.

(End of Requirement)

AI 25.1103-101 ARMING REQUIREMENTS AND PROCEDURES FOR PERSONAL SECURITY SERVICES CONTRACTORS AND FOR REQUESTS FOR PERSONAL PROTECTION (MAR 2009)

General. Contractor and its subcontractors at all tiers that require arming under this contract agree to obey all laws, regulations, orders, and directives applicable to the use of private security personnel in Iraq and Afghanistan, including U.S. CENTCOM, Multi-National Force Commander and Multi-National Corps Commander orders, instructions and directives. Contractors will ensure that all employees, including employees at any tier of subcontracting relationships, armed under the provisions of this contract, comply with the contents of this clause and with the requirements set forth in the following:
DODI 3020.41, *Program Management for Acquisition and Operational Contract Support in Contingency Operations*;
DFARS 252.225-7040, *Contractor Personnel Supporting a Force Deployed Outside the United States*;
Class Deviation 2007-O0010, Contractor Personnel in the United States Central Command Area of Responsibility
CPA Order #17, *Registration Requirements for Private Security Companies*, dated 27 Jun 04;
U.S. CENTCOM Policy Letter, Mod 1, *Personal Protection and Contract Security Service Arming*, dated 7 Nov 2006
Required Government Documentation. The unit requesting the contractor security shall provide a description of the following to the arming approval authority and to the contracting officer:
The specific location where the PSC will operate;
The persons and/or property that require protection;
The anticipated threat;
The required weapon types; and
The reason current security/police forces are inadequate.
Required Contractor Documentation. Contractors and their subcontractors at all tiers

that require arming approval shall provide the following to the contracting officer representative (COR):
Documentation that each employee who will be armed under the contract received the following training—
Weapons Qualification/Familiarization. All employees must meet the qualification requirements established by any DoD or other U.S. government agency
Law of Armed Conflict (LOAC);
Rules for the Use of Force (RUF), as defined in the U.S. CENTCOM Policy, dated 23 December 2005; and
Distinction between the above-prescribed RUF and the Rules of Engagement (ROE), which are applicable only to military forces.
Completed DD Form 2760 (or equivalent documentation) for each armed employee, indicating that the employee is not otherwise prohibited under U.S. law from possessing the required weapon or ammunition.
One (1) copy of a business license from the Iraqi or Afghani Ministry of Trade or Interior;
One (1) copy of an operating license (or a temporary operating license) from the Ministry of Interior;
A communications plan that, at a minimum, sets forth the following:
The contractor's method of notifying military forces and requesting assistance where hostilities arise or combat action is needed;
How relevant threat information will be shared between contractor security personnel and U.S. military forces; and
How the contractor will coordinate transportation with appropriate military authorities.
An acceptable plan for accomplishing background checks on all contractor and subcontractor employees who will be armed under the contract. The contractor shall, at a minimum, perform the following (which will be specifically addressed in its plan and which will be documented and furnished to the COR upon completion):
Use one or more of the following sources when conducting the background checks: Interpol, FBI, Country of Origin Criminal Records, Country of Origin U.S. Embassy Information Request, CIA records, and/or any other records available;
Verify with MNC-I or Afghanistan RCE – CG Provost Marshal that no employee has been barred by any commander within Iraq or Afghanistan; and
Certify, after completing all checks, that all persons armed under this contract are not prohibited under U.S. law from possessing a weapon or ammunition.
Required Contractor Acknowledgements. Contractors and their subcontractors at all tiers that require arming approval will provide written acknowledgement of the following to the COR:
Penalties for Non-Compliance. Failure of contractor or subcontractor employee(s) to comply with the laws, regulations, orders, and rules (including those specified herein) governing the use of force may result in the revocation of weapons authorization for such employee(s). Where appropriate, such failure may also result in the total revocation of weapons authorization for the contractor (or subcontractor) and sanctions under the contract, including termination.
Criminal and Civil Liability. Arming of contractor or subcontractor employees under this contract may subject the contractor, its subcontractors, and persons employed by the same, to U.S. and Host Nation prosecution and civil liability. "Host Nation" refers to the nation or nations where services under this contract are performed.
Lapses in Training. Failure to successfully retrain an employee who is armed under this contract within twelve (12) months of the last training date will constitute a lapse in the employee's authorization to possess and carry the weapon. All unauthorized employees will immediately surrender their weapon to the contractor and will remain unarmed until such time as they are retrained and the COR determines that the retraining is sufficient.
Authorized Weapon & Ammunition Types. Unless DCDRUSCENTCOM (or a designee) provides otherwise, all arming requests and authorizations for contractor or

subcontractor employees under this contract shall be limited to U.S. Government approved weapons and ammunition. This restriction applies to all weapons in the possession of contractor employees, even if such weapons are required for personal protection. The following weapons and ammunition are currently authorized by the U.S. Government for use in Iraq and Afghanistan:

The M9, M4, M16, or equivalent (e.g. .45 CAL, AK-47).

The M9 or equivalent sidearm will be the standard personal protection weapon unless other weapons are specifically requested and approved.

U.S. government Ball ammunition is the standard approved ammunition.

Requirements for Individual Weapons Possession. All employees of the contractor and its subcontractors at all tiers who are armed under this contract must:

Possess only those U.S. Government-approved weapons and ammunition for which they are qualified under the training requirements of section (c);

Carry weapons only when on duty or at a specific post;

Not conceal any weapons, unless specifically authorized;

Carry proof of authorization to be armed. Employees not possessing such proof will be deemed unauthorized and must surrender their weapon to their employer; and

IAW USCENTCOM G.O. #1, consumption of alcohol in Iraq or Afghanistan is prohibited. In the event of a suspension or and exception to G.O. #1, employees shall not consume any alcoholic beverage while armed or within eight (8) hours of the next work period where they will be armed.

Weapons/Equipment Restrictions and Responsibilities. Unless otherwise provided, the U.S. Government will not provide any weapons or ammunition to contractors, their subcontractors, or any employees of the same. The Contractor will provide all weapons and ammunition to those employees that will be armed under the contract. The contractor and its subcontractors at all tiers will also provide interceptor body armor, ballistic helmets, and the Nuclear, Biological, and Chemical (NBC) protective masks to those employees that require such equipment in the performance of their duties.

Rules for the Use of Force (RUF). In addition to the RUF and ROE training referenced in paragraph (c), the contractor and its subcontractors at all tiers will monitor and report all activities of its armed employees that may violate the RUF. Prompt reporting demonstrates a desire by the contractor and its subcontractors to minimize the impact of any violations and, therefore, will be given favorable consideration. Violations of the RUF include, though are not limited to:

Taking a direct part in hostilities or combat actions, other than to exercise self-defense;

Failing to cooperate with Coalition and Host Nation forces;

Using deadly force, other than in self-defense where there is a reasonable belief of imminent risk of death or serious bodily harm;

Failing to use a graduated force approach;

Failing to treat the local civilians with humanity or respect; and

Detaining local civilians, other than in self-defense or as reflected in the contract terms.

Retention and Review of Records. The Contractor and all subcontractors at all tiers shall maintain records on weapons training, LOAC, RUF and the screening of employees for at least six (6) months following the expiration (or termination) of the contract. The Contractor and its subcontractors at all tiers shall make these records available to the Contracting Officer or designated representative, at no additional cost to the government, within 72 hours of a request.

Contractor Vehicles. Vehicles used by contractor and subcontractor personnel in the course of their security duties shall not be painted or marked to resemble U.S./Coalition or host nation military and police force vehicles.

Quarterly Reporting. The prime contractor will report quarterly (i.e. NLT 1 January, 1 April, 1 July and 1 October for each quarter of the calendar year) to the Contracting Officer responsible for this contract, and any other organization designated by the Contracting Officer, the following information under this contract:

The total number of armed civilians and contractors;

The names and contact information of its subcontractors at all tiers; and
A general assessment of the threat conditions, adequacy of force numbers, and any problems that might require a change to force levels. Note: this information is in addition to the information the contractor promises to immediately provide under the communications plan referenced at paragraph (c)(5).

(End of Requirement)

AI 36.521-100
ELECTRICAL AND STRUCTURAL BUILDING STANDARDS FOR CONSTRUCTION PROJECTS
(MAR 2009)

(a) The standards set forth herein are the minimum requirements for the contract. These standards must be followed unless a more stringent standard is specifically included. In such case the most stringent standard shall be required for contract acceptance.
(b) The contractor, in coordination with the Contracting Officer, Base Camp Mayor, Base/Unit Engineers, and requiring activity shall evaluate, upgrade, build, and/or refurbish buildings to a safe and livable condition. This work may include refurbishment, construction, alterations, and upgrades. All work shall be in accordance with accepted standards of quality.
(c) As dictated by the Unified Facilities Criteria (UFC) the contract shall meet:
(1) “the minimum requirements of United States’ National Fire Protection Association (NFPA) 70,
(2) National Electrical Code (NEC),
(3) the American National Standards Institute (ANSI) C2, and
(4) the United States’ National Electrical Safety Code (NESC).
(d) These standards must be met when it is reasonable to do so with available materials. When conditions dictate deviation, then provisions within the International Electrical Code (IEC) or British Standard (BS 7671) shall be followed. Any deviations from the above necessary to reflect market conditions, shall receive prior written approval from a qualified engineer and the Contracting Officer.
(e) The following internet links provide access to some of these standards:
UFC: http://65.204.17.188/report/doc_ufc.html
NFPA 70: http://www.nfpa.org
NESC: http://www.standards.ieee.org/nesc

(End of Requirement)

SPOT

SYNCHRONIZED PREDEPLOYMENT AND OPERATIONAL TRACKER (SPOT)

CLASS DEVIATION 2007-O0010, IMPLEMENTATION OF THE SYNCHRONIZED PREDEPLOYMENT AND OPERATIONAL TRACKER (SPOT) TO ACCOUNT FOR CONTRACTOR PERSONNEL PERFORMING IN THE UNITED STATES CENTRAL COMMAND AREA OF RESPONSIBILITY.

(i) “Performance in the United States Central Command Area of Responsibility (USCENTCOM AOR)” means performance of a service or construction, as required by the contract. For supply contracts, production of the supplies or associated overhead functions are not covered, but services associated with the acquisition of the supplies are covered (e.g., installation or maintenance).

(ii) If a contract requires performance in the USCENTCOM AOR, but some personnel performing the contract are authorized to accompany the U.S. Armed Forces, and other personnel performing the contract are not authorized to accompany the U.S. Armed Forces, include in the solicitation and contract both the clause at DFARS 252.225-7040 and the clause provided by Class Deviation 2007-O0010. Paragraph (b)(1) of each clause limits the applicability of the clause to the appropriate personnel. There are differences between the two clauses, primarily in Government support to contractor personnel (e.g., security protection and limited medical treatment) and potential applicability of the Uniform Code of Military Justice to contractor employees that are authorized to accompany the U.S. Armed Forces.

(iii) The requirements of paragraph (g) of the clause in Class Deviation 2007-O0010 are not applicable to subcontracts for which the period of performance of the subcontract is less than 30 days.

(iv) In exceptional circumstances, the head of the agency may authorize deviations from the requirements of Class Deviation 2007-O0010, in accordance with FAR Subpart 1.4 and DFARS Subpart 201.4.

(v) Registration in SPOT.

(A) Register for a SPOT account at https://spot.altess.army.mil .

(B) The customer support team must validate user need. This process may take 2 business days. Company supervisors will be contacted to determine the appropriate level of user access.

(vi) Access to SPOT. Upon approval, all users will access SPOT at https://spot.altess.army.mil .

(vii) SPOT Questions. Refer SPOT application assistance questions to the Customer Support Team at (717) 506-1368 or spot@technisource.com .

DEFENSE BASE ACT INSURANCE

DEFENSE BASE ACT INSURANCE RATES – LIMITATION – FIXED-PRICE (OCT 2008)

(a) The U. S. Army Corps of Engineers (USACE) has entered into a contract with **CNA Insurance** to provide all Defense Base Act (DBA) insurance to USACE and JCC-I/A contractors and subcontractors at a contracted fixed rate. The fixed rates for this insurance are as follows:

Service	$4.00	per $100 of employee remuneration
Construction	$7.50	per $100 of employee remuneration
Aviation	$20.00	per $100 of employee remuneration
Security	$12.50	per $100 of employee remuneration

(b) Bidders/Offerors should compute the total compensation or total payroll, (salary, plus overseas recruitment incentive and post differential, but excludes per diem, housing allowance, travel expenses, temporary quarters allowance, education allowance and other miscellaneous post allowances) to be paid to employees who will be covered by DBA insurance. Compute the cost of DBA Insurance by utilizing the spaces provided below for the base period and whatever extension there may be thereafter, if applicable.

(1) Compensation of Covered Employees: _____
(Total Payroll Not Total Contract Value) Ex:: If total Payroll is $100,000.00

(2) Applicable DBA Rate: _____
(Use appropriate Rate) Ex: If a Service, the rate is $4.00/$100 or 4%

(3) Total DBA Cost: _____
(Amount of DBA Premium) Ex:: $100 K multiplied by 4% is $4,000.00

(c) Bidders/Offerors shall include a statement as to whether or not local nationals or third country nationals will be employed on the resultant contract.

(d) CNA Insurance is utilizing Rutherfoord International as their managing Broker. The primary POC is the USACE DBA Program Administrator is Ramoan Jones, (703) 813-6571 ramoan.jones@rutherfoord.com. The alternate POC is Sara Payne, Senior Vice President, (703) 813-6503 sara.payne@rutherfoord.com.

WORKERS COMPENSATION INSURANCE (DEFENSE BASE ACT) – CONSTRUCTION (OCT 2008)

(a) This Special Contract Requirement supplements FAR Clause 52.228-3 Workers' Compensation Insurance (Defense Base Act).

(b) The contractor agrees to procure Defense Base Act (DBA) insurance pursuant to the terms of the contract between the U.S. Army Corps of Engineers (USACE) and **CNA Insurance** unless the contractor has a DBA self-insurance program approved by the Department of Labor. Proof of this self-insurance shall be provided to the Contracting Officer. The contractor shall submit proof of a valid DBA Insurance policy with CNA Insurance for the Prime and their Subcontractor's at every tier prior to performance of the contract. The current rate under the USACE and JCC-I/A contract is **$7.50 per $100 of compensation for construction.**

(c) The contractor agrees to insert a Special Contract Requirement substantially the same as this one in all subcontracts (at every tier) to which DBA is applicable.

(d) Should the rates for DBA insurance coverage increase or decrease during the performance of this contract, USACE shall modify the contract accordingly. However, the revised rates will not be applicable until the Contractor's or Subcontractor's DBA Insurance policy is due to be renewed.

(e) Premiums will be reimbursed only if coverage is purchased through the USACE mandatory requirements DBA contract administered by CNA Insurance and their Managing Broker, Rutherfoord International.

(f) Failure to comply and purchase Defense Base Act (DBA) Insurance in accordance with FAR Clauses 52.228-3 Workers' Compensation Insurance (Defense Base Act), from the U.S. Army Corps of Engineers mandatory Insurance Carrier/Broker (CNA Insurance/Rutherfoord International) for the Prime and all of the Subcontractors at every tier, shall be considered a material breech and could cause your contract to be terminated for default/cause.

Economic Surveillance

Contractor shall report average pay rates and employment levels, for both domestic and international employees monthly. The information will be reported by labor category (as specified by USACE) and be specific to each work active work site. In addition the contractor shall report monthly non-labor contract spending for domestic and international contract expenses. This information will be reported by category (as specified by USACE) and will be specific to each active work site. Reports will be submitted to the Contracting Officer's Representative (COR) assigned to the Contract.

FACULTIES OF HIGHER EDUCATION

AT VARIOUS LOCATIONS, AFGHANISTAN

FUNDED BY USAID - AFGHANISTAN

IN ASSOCIATION WITH
AFGHANISTAN HIGHER EDUCATION PROJECT
AND THE AFGHANISTAN MINISTRY OF HIGHER EDUCATION

US ARMY CORPS OF ENGINEERS
AFGHANISTAN ENGINEER DISTRICT

NO.	DESCRIPTION	DATE	APP'D

DESIGNED BY: JLK | DATE: 27 March 2008
DWN BY: JLK | SUBMITTED BY:
CHK BY: JLK | FILE NO.: FHEg101t

US Army Corps of Engineers
Afghanistan Engineer District

FACULTIES OF HIGHER EDUCATION
VARIOUS LOCATIONS, AFGHANISTAN

TITLE PAGE

SHEET REFERENCE NUMBER:
G–01

DRAWING INDEX

SHT.REF. NO.	FILE NO.	REVISIONS REV. NO.	REVISIONS AM/COP NO.	TITLE
G-01	FHEg101t			TITLE SHEET
G-02	FHEg602d			DRAWING INDEX
G-03	FHEg603m			BILL OF QUANTITIES
A-01	FHEa101f			FIRST FLOOR PLAN – BASE BID
A-01a	FHEa101af			FIRST FLOOR PLAN WITH OPTIONS
A-02	FHEa102f			SECOND FLOOR PLAN – BASE BID
A-02a	FHEa102af			SECOND FLOOR PLAN WITH OPTIONS
A-03	FHEa103r			ROOF PLAN – BASE BID
A-04	FHEa204e			ELEVATIONS – BASE BID
A-05	FHEa305b			BUILDING SECTIONS
A-06	FHEa406w			TYPICAL WALL SECTIONS
A-07	FHEa407p			ENLARGED TOILET AND STAIR PLANS
A-08	FHEa408s			STAIR SECTIONS
A-09	FHEa609d			DOOR & WINDOW SCHEDULES AND ELEVATIONS
A-10	FHEa610f			ROOM FINISH SCHEDULE
A-11	FHEa511c			CASEWORK DETAILS
S-01	FHEs101f			FOUNDATION PLAN – BASE BID
S-02	FHEs102f			FIRST FLOOR FRAMING PLAN BASE BID
S-03	FHEs103r			ROOF FLOOR FRAMING PLAN – BASE BID
S-04	FHEs104r			ROOF FRAMING PLAN – BASE BID
S-05	FHEs605c			COLUMN AND FOOTING SCHEDULES
S-06	FHEs606g			GIRDER REINFORCING SCHEDULE
S-07	FHEs507c			TYPICAL CMU WALL REINFORCEMENT DETAIL
E-01	FHEe101p			FIRST FLOOR POWER PLAN – BASE BID
E-02	FHEe102p			SECOND FLOOR POWER PLAN – BASE BID
E-03	FHEe103l			FIRST FLOOR LIGHTING PLAN – BASE BID
E-04	FHEe104l			SECOND FLOOR LIGHTING PLAN – BASE BID
E-05	FHEe605c			PUBLIC ADDRESS RISER DIAGRAM – BASE BID
M-01	FHEm401h			VENTILATION PLANS
P-01	FHEp401w			DOMESTIC WATER RISER DIAGRAM
P-02	FHEp402w			PLUMBING WASTE AND VENT RISER DIAGRAM

SHT.REF. NO.	FILE NO.	REVISIONS REV. NO.	REVISIONS AM/COP NO.	TITLE

NO. | DESCRIPTION | DATE

DESIGNED BY: JLK | DRN BY: JLK | CHK BY: JLK | DATE: 27 March 2008 | SUBMITTED BY: | FILE NO.: FHEg602d

US Army Corps of Engineers
Afghanistan Engineer District

FACULTIES OF HIGHER EDUCATION
VARIOUS LOCATIONS, AFGHANISTAN

DRAWING INDEX

SHEET REFERENCE NUMBER:
G-02

MATERIAL	UNIT	QUANTITY
STRUCTURAL		
REINFORCED CONCRETE	CM	713
150 mm BASE AGGREGATE	CM	118
200 mm THK CMU BLOCK WALL	SM	1800
100 mm THK CMU BLOCK WALL	SM	240
50 x 150 PRESSURE TREATED WOOD BLOCKING	LM	760
50 x 150 WOOD RAFTERS	LM	1800
METAL ROOFING	SM	800
19 mm ROOF PLYWOOD SHEATHING	SM	800
200 mm ROOF INSULATION	SM	716
100 mm EXT INSULATION BOARD w/ STUCCO	SM	760
50 x 200 PRESSURE TREATED WOOD FASCIA	LM	130
METAL FASCIA COVER x 200 mm HIGH	LM	130
50 x 100 SOFFIT FRAMING	LM	240
VENTED METAL SOFFIT x 600 WIDE	LM	130
16mm DIA x 300 mm ROOF ANCHOR BOLTS @1200mm O.C.	EA	260
ARCHITECTURAL		
DOOR TYPE -1 (INCL HARDWARE)	EA	12
DOOR TYPE -2 (INCL HARDWARE)	EA	9
DOOR TYPE -3 (INCL HARDWARE)	EA	4
DOOR TYPE -4 (INCL HARDWARE)	EA	1
DOOR TYPE -5 (INCL HARDWARE)	EA	4
DOOR TYPE -6 (INCL HARDWARE)	EA	5
DOOR TYPE -7 (INCL HARDWARE)	EA	2
WINDOW - 4000 mm (W) x 1200 mm (H)	EA	15
WINDOW - 2400 mm (W) x 1200 mm (H)	EA	6
WINDOW - 1200 mm (W) x 1200 mm (H)	EA	1
LABORATORY COUNTER	LM	68
STORAGE SHELVING 600mm DEEP	LM	72
INDIVIDUAL ROOM SIGNS - WALL MOUNTED	EA	33
BUILDING DIRECTORY MARQUE	EA	1
50 mm TERRAZZO TILE	SM	72
TERRAZZO "CHIPS" FLOORING	SM	1100
INTERIOR PAINT OVER PLASTER	SM	4700
1200 mm (W) x 900 mm (H) TACK BOARDS	EA	14
2400 mm (W) x 1200 mm (H) WHITE BOARDS	EA	14

MATERIAL	UNIT	QUANTITY
MECHANICAL		
LAVATORIES	EA	12
WATER CLOSETS	EA	12
FLOOR SINKS	EA	2
LABORATORY SINKS	EA	32
12 mm DIA WATER SUPPLY PIPING	LM	32
20 mm DIA WATER SUPPLY PIPING	LM	20
25 mm DIA WATER SUPPLY PIPING	LM	24
32 mm DIA WATER SUPPLY PIPING	LM	64
40 mm DIA WATER SUPPLY PIPING	LM	4
DOMESTIC WATER BALL VALVE AND BOX	EA	1
FLOOR DRAINS WITH P-TRAPS	EA	4
WATER HAMMER ARRESTORS	EA	6
32 mm DIA WASTE PIPING	LM	64
40 mm DIA WASTE PIPING	LM	16
50 mm DIA WASTE PIPING	LM	36
65 mm DIA WASTE PIPING	LM	12
75 mm DIA WASTE PIPING	LM	26
100 mm DIA WASTE PIPING	LM	57
32 mm VENT PIPING	LM	76
40 mm VENT PIPING	LM	40
50 mm VENT PIPING	LM	24
65 mm VENT PIPING	LM	12
75 mm VENT PIPING	LM	6
CLEAN OUTS	EA	11
30 L/S INTAKE FAN W/BACKDRAFT DAMPER & INSECT SCREEN	EA	1
70 L/S EXHAUST FAN W/BACKDRAFT DAMPER	EA	4
175 L/S EXHAUST FAN W/BACKDRAFT DAMPER	EA	4
100mm DIA. HVAC DUCT - GALVANIZED	LM	4
ELECTRICAL		
LIGHT FIXTURES 600 x 1200	EA	226
LIGHT FIXTURES 300 x 1200	EA	9
LIGHT PANEL BOARDS, 100A MCB	EA	2
ELECTRICAL PANEL BOARDS, 150A MCB	EA	2
20 AMP RATED DUPLEX OUTLETS	EA	108
20 AMP GROUND FAULT CIRCUIT INTERRUPTER (GFCI) DUPLEX OUTLETS	EA	36
SWITCHES FOR LIGHT FIXTURES, 1P 20A	EA	65
EMERGENCY LIGHTS W/90 MIN. BATTERY BACKUP	EA	6
VENTILATOR FANS - CEILING w/ SWITCHES, 1P 20A	EA	36
EXIT SIGNS - LIGHTED, LED W/90 MIN. BATTERY BACKUP	EA	7
SMOKE DETECTORS	EA	6
FIRE ALARM CONTROL PANEL	EA	1
PULL STATIONS WITH ALARM BELLS	EA	5
COMPUTER SERVERS	EA	2
COMPUTER WALL MOUNTED OUTLETS	EA	24
PA CONTROL PANEL	EA	1
PA ROOM SPEAKERS - WALL MOUNTED	EA	28
20 mm ELECTRICAL CONDUIT w/ CABLING	LM	500
20 mm PA SYSTEM CONDUIT w/ CABLING	LM	250
20 mm COMPUTER CONDUIT w/ CABLING	LM	350

NOTE: QUANTITIES INDICATED ARE BASE BID ESTIMATES ONLY - CONTRACTOR RESPONSIBLE FOR ACTUAL QUANTITY TAKEOFFS INCLUDING ADDITIONAL QUANTITIES REQUIRED BY AWARDED BID OPTIONS

NO.	DESCRIPTION	DATE

DESIGNED BY: JLK
DWN BY: JLK
CHK BY: JLK
DATE: 27 March 2008
SUBMITTED BY:
FILE NO.: FHEg603m

US Army Corps of Engineers
Afghanistan Engineer District

FACULTIES OF HIGHER EDUCATION
VARIOUS LOCATIONS, AFGHANISTAN

BILL OF QUANTITIES

SHEET REFERENCE NUMBER:
G–03

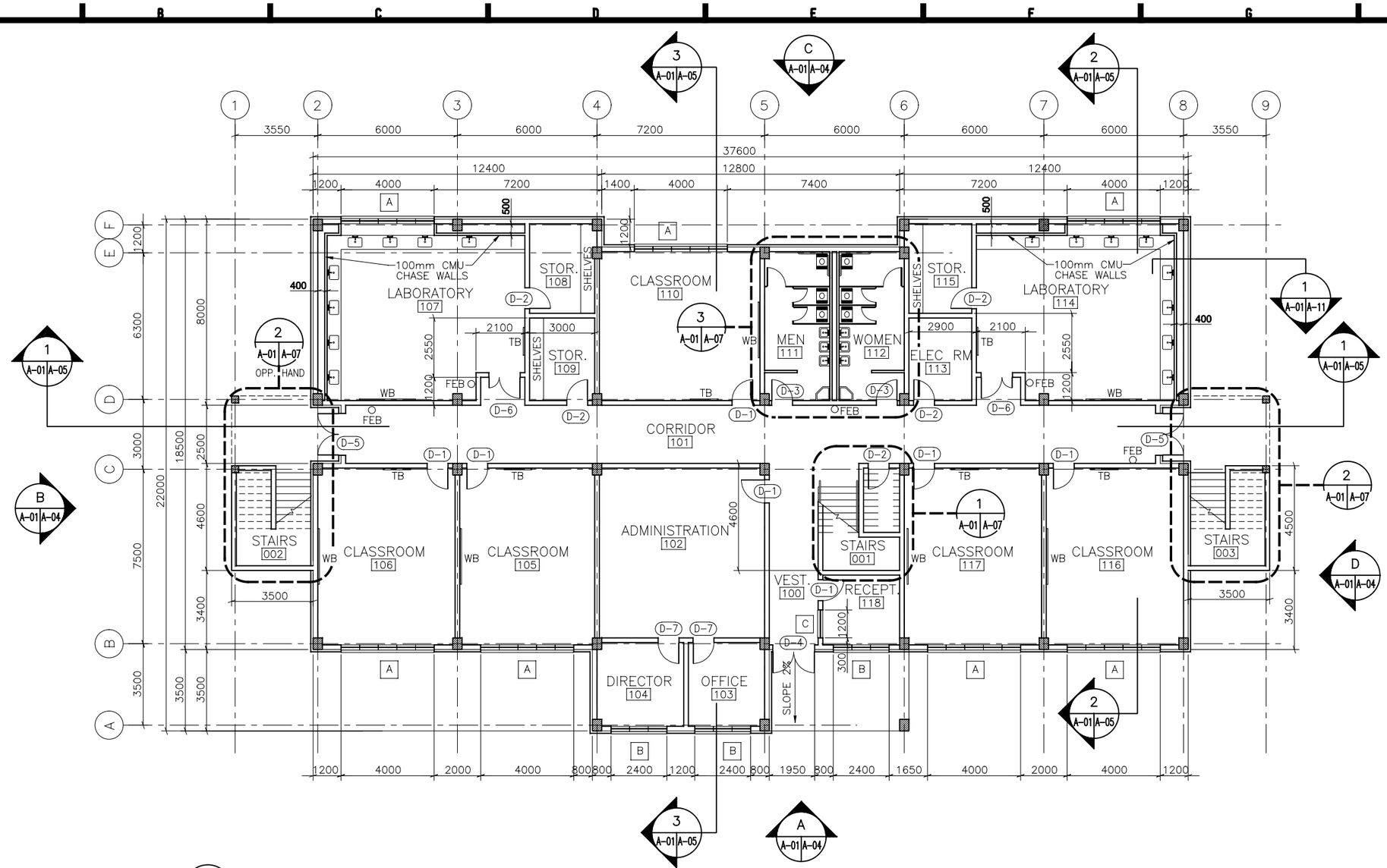

FIRST FLOOR PLAN – BASE BID

SCALE: 1:100

GROSS AREA=701 SQUARE METERS

LEGEND

A	WINDOW TYPE – SEE PLATE A–09
XX	DOOR TYPE – SEE PLATE A–09
O FEB	FIRE EXTINGUSHER – BRACKET MOUNTED
TB	TACK BOARD – 1200mm WIDE x 900mm HIGH – CENTER 1200mm FROM DOOR JAMB
WB	WHITE BOARD – 2400mm WIDE x 1200mm HIGH – CENTER ON WALL
SHELVES	3 SHELVES, 600mm DEEP x LENGTH OF ROOM

NOTES

1. ALL DIMENSIONS ARE TO FACE OF MASONRY, UNLESS NOTED OTHERWISE.
2. ALL WALLS SHALL BE 200mm CMU UNLESS OTHERWISE INDICATED– SEE ENLARGED PLANS
3. MASONRY OPENINGS AT DOORS SHALL BE 200mm FROM ADJACENT WALL OR COLUMN, OR SHALL BE CENTERED IN WALL AS ILLUSTRATED, UNLESS OTHERWISE NOTED.
4. INTERIOR MASONRY PARTITION WALLS SHALL BE ALIGNED WITH FACE OF COLUMNS OR BE CENTERED ON COLUMNS AS ILLUSTRATED UNLESS OTHERWISE DIMENSIONED OR NOTED.

1:100

DESIGNED BY: JLK | DRAWN BY: JLK | CHK BY: JLK | DATE: 27 March 2008 | SUBMITTED BY: | FILE NO.: FHEa101f

US Army Corps of Engineers
Afghanistan Engineer District

FACULTIES OF HIGHER EDUCATION
VARIOUS LOCATIONS, AFGHANISTAN

FIRST FLOOR PLAN
BASE BID

SHEET REFERENCE NUMBER:
A-01

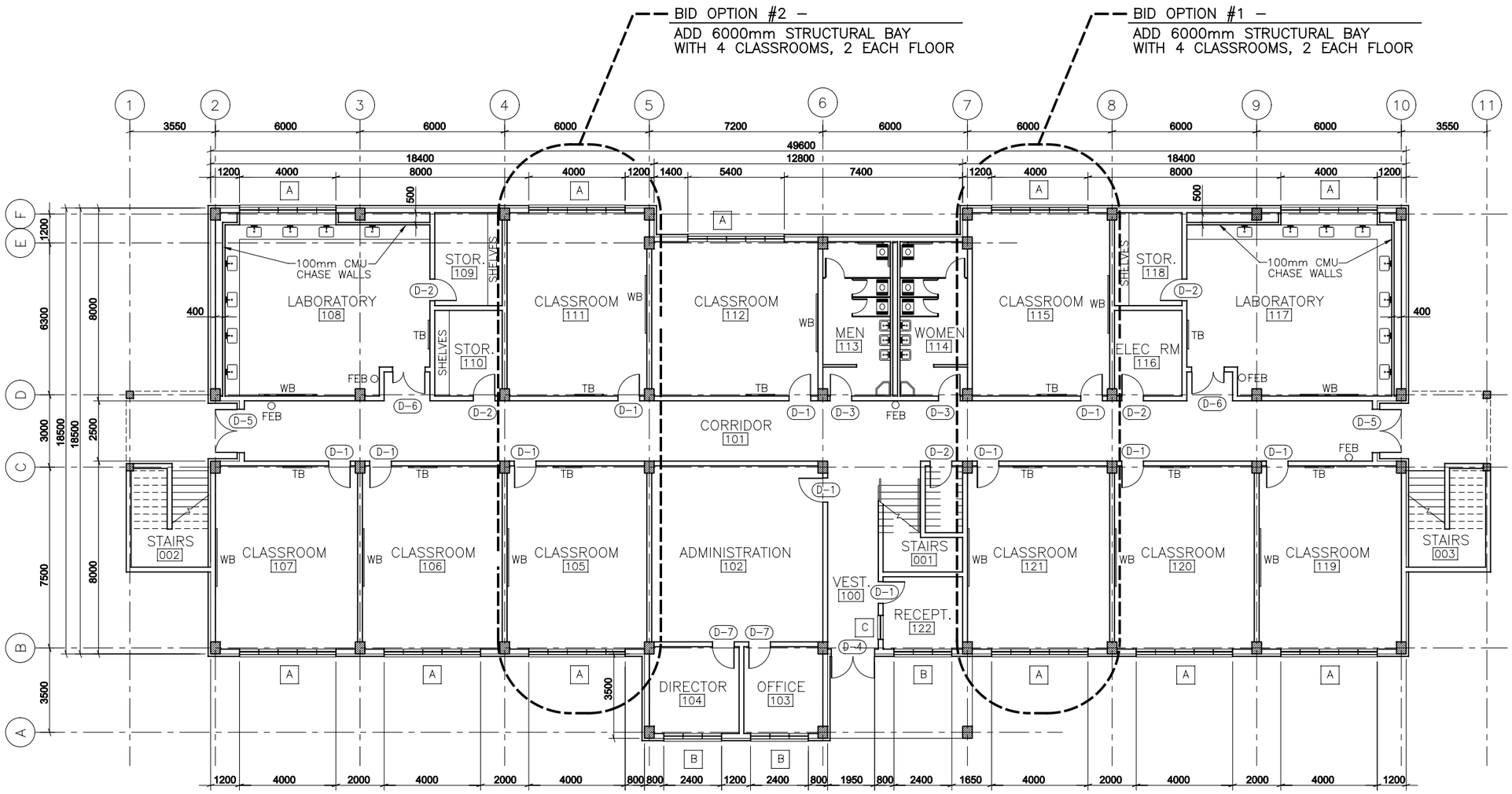

1 / A-01a | A-01a — FIRST FLOOR PLAN WITH OPTIONS

SCALE: 1:100

GROSS AREA=923 SQUARE METERS

LEGEND

A	WINDOW TYPE – SEE PLATE A–09
XX	DOOR TYPE – SEE PLATE A–09
O FEB	FIRE EXTINGUSHER – BRACKET MOUNTED
TB	TACK BOARD – 1200mm WIDE x 900mm HIGH – CENTER 1200mm FROM DOOR JAMB
WB	WHITE BOARD – 2400mm WIDE x 1200mm HIGH – CENTER ON WALL
SHELVES	3 SHELVES, 600mm DEEP x LENGTH OF ROOM

NOTES

1. ALL DIMENSIONS ARE TO FACE OF MASONRY, UNLESS NOTED OTHERWISE.
2. ALL WALLS SHALL BE 200mm CMU UNLESS INDICATED OTHERWISE – SEE ENLARGED PLANS
3. SEE BASE BID FLOOR PLANS ON PLATES A–01 AND A–02 FOR ADDITIONAL INFORMATION AND REFERENCES, SUCH AS LOCATIONS OF SECTION CUTS, ENLARGED PLAN REFERENCES, ETC.
4. MASONRY OPENINGS AT DOORS SHALL BE 200mm FROM ADJACENT WALL OR COLUMN, OR SHALL BE CENTERED IN WALL OPENING AS ILLUSTRATED, UNLESS OTHERWISE NOTED.
5. ELECTRICAL POWER AND LIGHTING REQUIREMENTS SHALL APPLY TO ALL BID OPTION CLASSROOMS AND CORRIDOR. SEE ELECTRICAL DRAWINGS FOR TYPICAL CLASSROOM AND CORRIDOR ELECTRICAL POWER AND LIGHTING REQUIREMENTS.
6. INTERIOR MASONRY PARTITION WALLS SHALL BE ALIGNED WITH FACE OF COLUMNS OR BE CENTERED ON COLUMNS AS ILLUSTRATED UNLESS OTHERWISE DIMENSIONED OR NOTED.

1:100

DESIGNED BY: JLK | DRAWN BY: JLK | CHK BY: JLK
DATE: 27 March 2008
SUBMITTED BY:
FILE NO.: FHEa101af

US Army Corps of Engineers
Afghanistan Engineer District

FACULTIES OF HIGHER EDUCATION
VARIOUS LOCATIONS, AFGHANISTAN

FIRST FLOOR PLAN WITH OPTIONS

SHEET REFERENCE NUMBER: A-01a

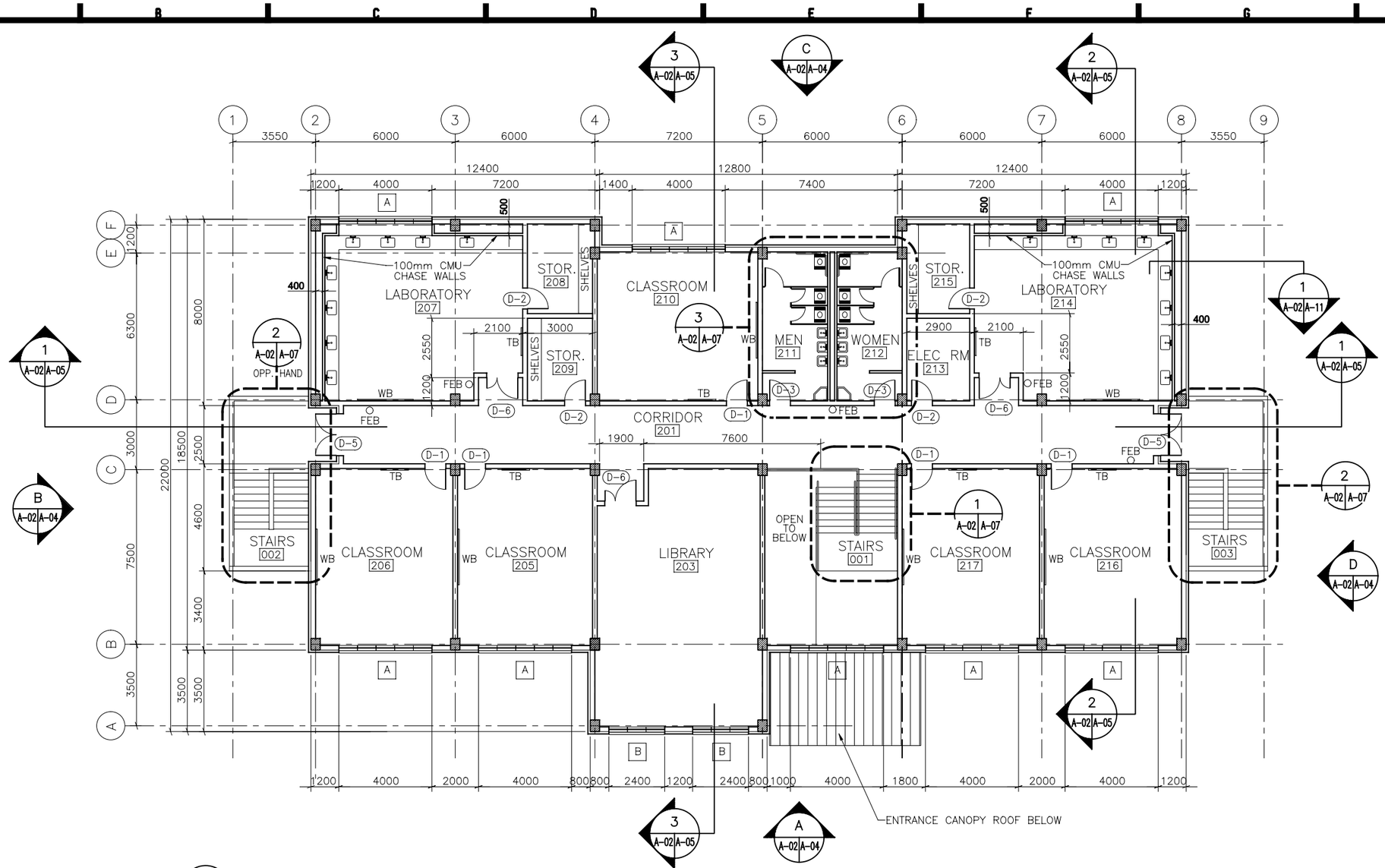

SECOND FLOOR PLAN BASE BID

SCALE: 1:100

GROSS AREA=701 SQUARE METERS

LEGEND

A	WINDOW TYPE – SEE PLATE A–09
XX	DOOR TYPE – SEE PLATE A–09
FEB	FIRE EXTINGUSHER – BRACKET MOUNTED
TB	TACK BOARD – 1200mm WIDE x 900mm HIGH – CENTER 1200mm FROM DOOR JAMB
WB	WHITE BOARD – 2400mm WIDE x 1200mm HIGH – CENTER ON WALL
SHELVES	3 SHELVES, 600mm DEEP x LENGTH OF ROOM

NOTES

1. ALL DIMENSIONS ARE TO FACE OF MASONRY, UNLESS NOTED OTHERWISE.
2. ALL WALLS SHALL BE 200mm CMU UNLESS OTHERWISE INDICATED– SEE ENLARGED PLANS
3. MASONRY OPENINGS AT DOORS SHALL BE 200mm FROM ADJACENT WALL OR COLUMN, OR SHALL BE CENTERED IN WALL AS ILLUSTRATED, UNLESS OTHERWISE NOTED.
4. INTERIOR MASONRY PARTITION WALLS SHALL BE ALIGNED WITH FACE OF COLUMNS OR BE CENTERED ON COLUMNS AS ILLUSTRATED UNLESS OTHERWISE DIMENSIONED OR NOTED.

1:100

DESIGNED BY: JLK | DATE: 27 March 2008
DWN BY: JLK | SUBMITTED BY:
CHK BY: JLK | FILE NO.: FHEa102f

US Army Corps of Engineers
Afghanistan Engineer District

FACULTIES OF HIGHER EDUCATION
VARIOUS LOCATIONS, AFGHANISTAN

SECOND FLOOR PLAN
BASE BID

SHEET REFERENCE NUMBER:
A-02

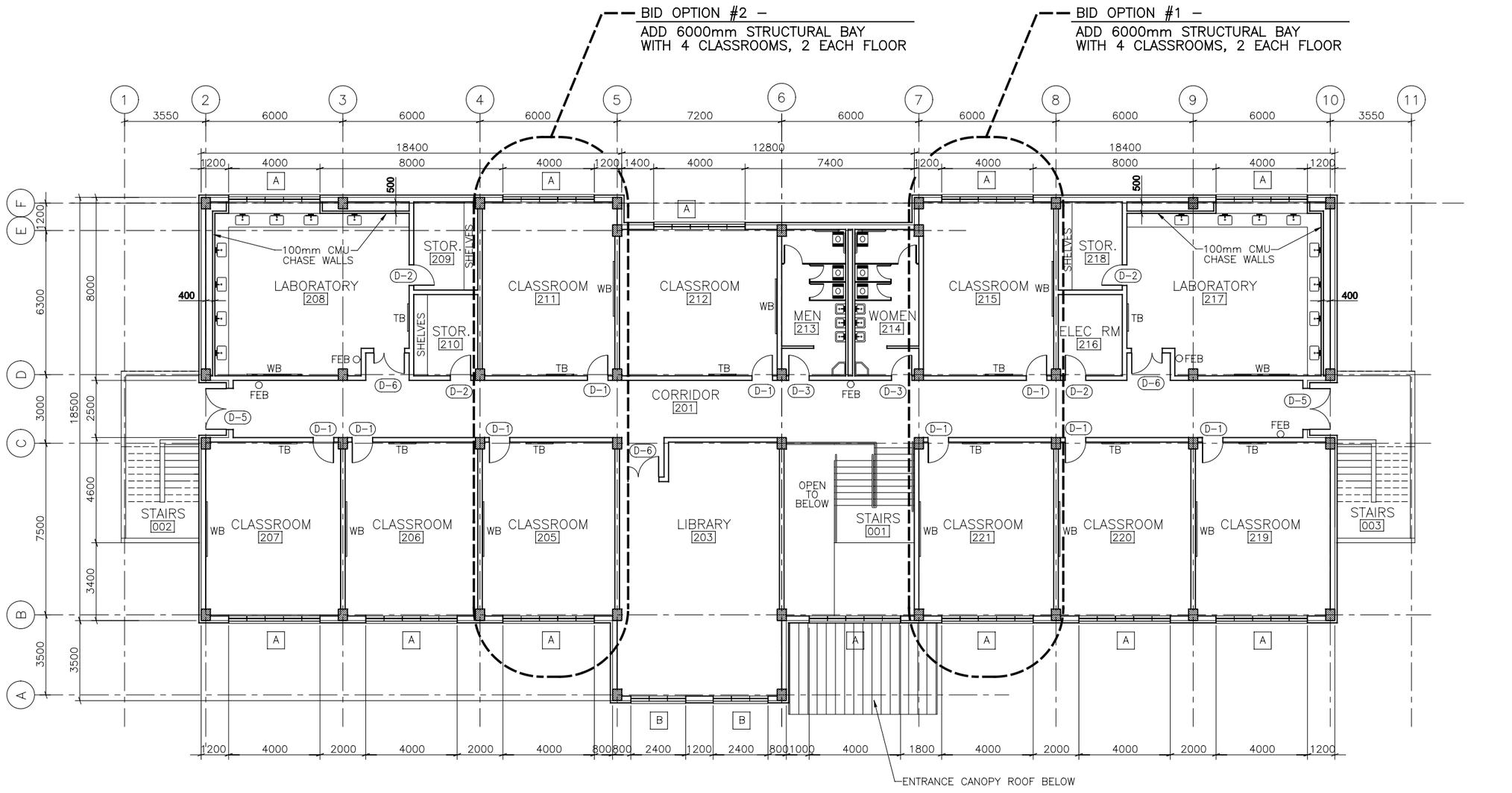

1 SECOND FLOOR PLAN WITH OPTIONS

A-01a | A-01a

SCALE: 1:100

GROSS AREA=923 SQUARE METERS

LEGEND

A	WINDOW TYPE – SEE PLATE A–09
XX	DOOR TYPE – SEE PLATE A–09
FEB	FIRE EXTINGUSHER – BRACKET MOUNTED
TB	TACK BOARD – 1200mm WIDE x 900mm HIGH – CENTER 1200mm FROM DOOR JAMB
WB	WHITE BOARD – 2400mm WIDE x 1200mm HIGH – CENTER ON WALL
SHELVES	3 SHELVES, 600mm DEEP x LENGTH OF ROOM

NOTES

1. ALL DIMENSIONS ARE TO FACE OF MASONRY, UNLESS NOTED OTHERWISE.
2. ALL WALLS SHALL BE 200mm CMU UNLESS INDICATED OTHERWISE – SEE ENLARGED PLANS
3. SEE BASE BID FLOOR PLANS ON PLATES A–01 AND A–02 FOR ADDITIONAL INFORMATION AND REFERENCES, SUCH AS LOCATIONS OF SECTION CUTS, ENLARGED PLAN REFERENCES, ETC.
4. MASONRY OPENINGS AT DOORS SHALL BE 200mm FROM ADJACENT WALL OR COLUMN, OR SHALL BE CENTERED IN WALL OPENING AS ILLUSTRATED, UNLESS OTHERWISE NOTED.
5. ELECTRICAL POWER AND LIGHTING REQUIREMENTS SHALL APPLY TO ALL BID OPTION CLASSROOMS AND CORRIDOR. SEE ELECTRICAL DRAWINGS FOR TYPICAL CLASSROOM AND CORRIDOR ELECTRICAL POWER AND LIGHTING REQUIREMENTS.
6. INTERIOR MASONRY PARTITION WALLS SHALL BE ALIGNED WITH FACE OF COLUMNS OR BE CENTERED ON COLUMNS AS ILLUSTRATED UNLESS OTHERWISE DIMENSIONED OR NOTED.

1:100

DESIGNED BY: JLK | DRWN BY: JLK | CHK BY: JLK | DATE: 27 March 2008 | SUBMITTED BY: | FILE NO.: FHEa102af

US Army Corps of Engineers
Afghanistan Engineer District

FACULTIES OF HIGHER EDUCATION
VARIOUS LOCATIONS, AFGHANISTAN

SECOND FLOOR PLAN WITH OPTIONS

SHEET REFERENCE NUMBER:
A-02a

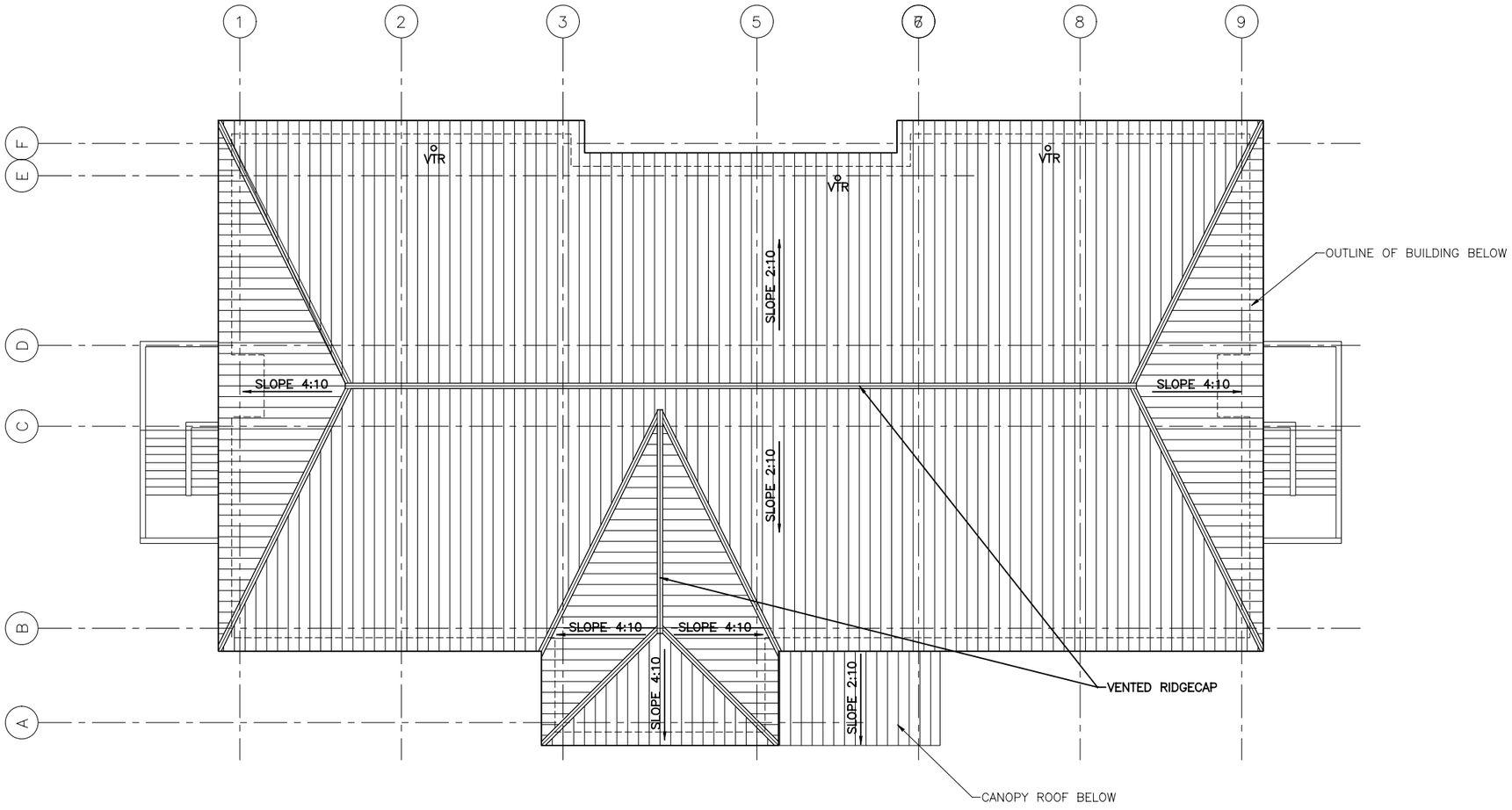

1 / A-01a | A-01a ROOF FLOOR PLAN BASE BID

SCALE: 1:100

LEGEND

VTR — PLUMBING VENT THROUGH ROOF

1:100

NO.	DESCRIPTION	DATE

DESIGNED BY: JLK | DATE: 27 March 2008
DWN BY: JLK | SUBMITTED BY:
CHK BY: JLK | FILE NO.: FHEa103r

US Army Corps of Engineers
Afghanistan Engineer District

FACULTIES OF HIGHER EDUCATION
VARIOUS LOCATIONS, AFGHANISTAN

ROOF FLOOR PLAN
BASE BID

SHEET REFERENCE NUMBER:
A-03

A FRONT ELEVATION – BASE BID
SCALE: 1:100
A-01 A-04
A-02

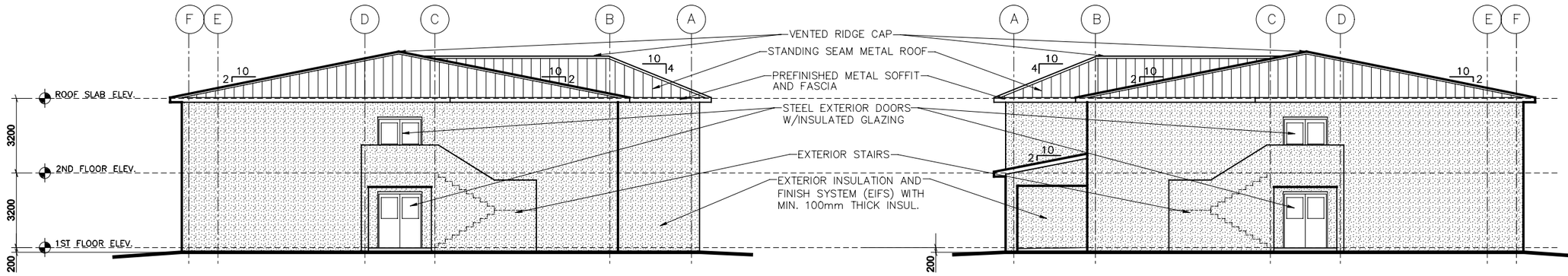

B SIDE ELEVATION – BASE BID
SCALE: 1:100
A-01 A-04
A-02

D SIDE ELEVATION – BASE BID
SCALE: 1:100
A-01 A-04
A-02

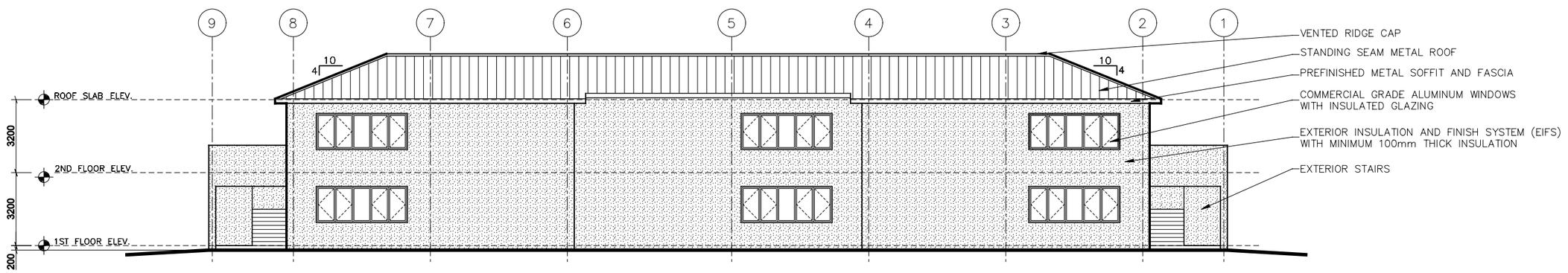

C REAR ELEVATION – BASE BID
SCALE: 1:100
A-01 A-04
A-02

0 1 2 3 4 5 6 7 8 9
1:100

NO.	DESCRIPTION	DATE

DESIGNED BY: JLK
DWN BY: JLK
CHK BY: JLK
DATE: 27 March 2008
SUBMITTED BY:
FILE NO.: FHEa204e

US Army Corps of Engineers
Afghanistan Engineer District

FACULTIES OF HIGHER EDUCATION
VARIOUS LOCATIONS, AFGHANISTAN

ELEVATIONS – BASE BID

SHEET REFERENCE NUMBER:
A-04

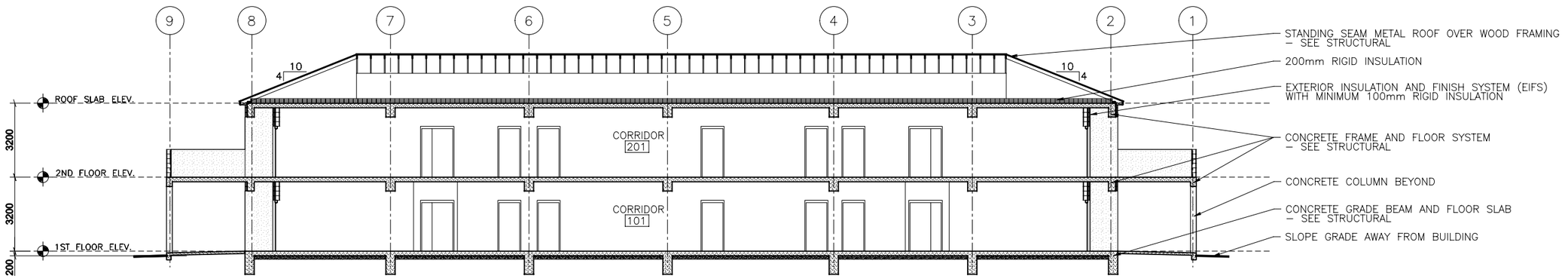

1 A-01 A-05 A-02

BUILDING CROSS SECTION

SCALE: 1:100

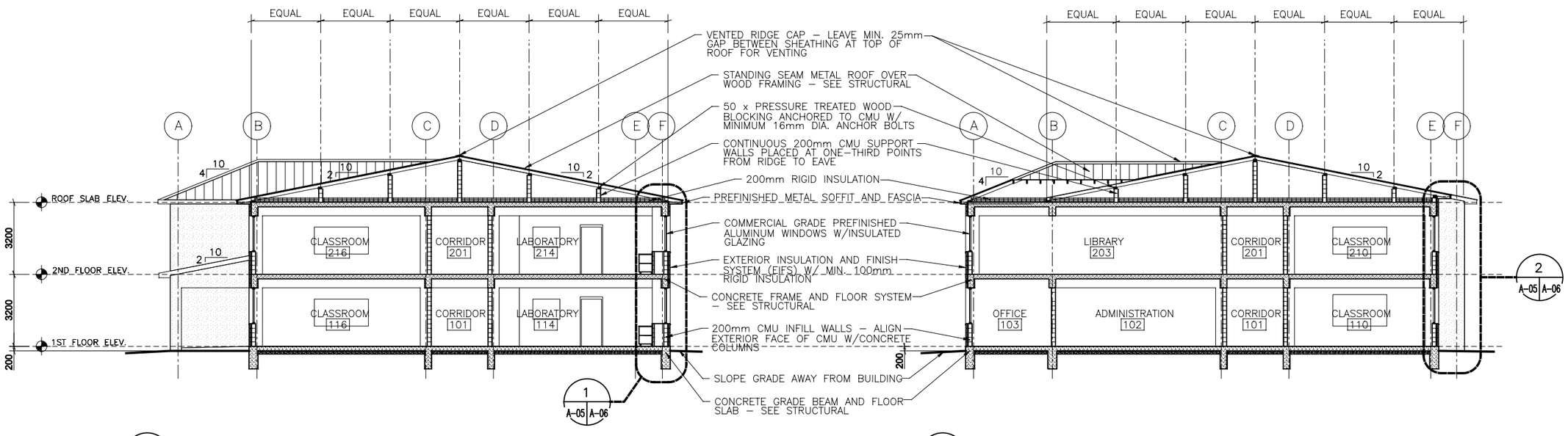

2 A-01 A-05 A-02

BUILDING CROSS SECTION

SCALE: 1:100

3 A-01 A-05 A-02

BUILDING CROSS SECTION

SCALE: 1:100

1 0 1 2 3 4 5 6 7 8 9
1:100

DESIGNED BY: JLK | DATE: 27 March 2008
DWN BY: JLK | SUBMITTED BY:
CHK BY: JLK | FILE NO.: FHEa305b

US Army Corps of Engineers
Afghanistan Engineer District

FACULTIES OF HIGHER EDUCATION
VARIOUS LOCATIONS, AFGHANISTAN

BUILDING SECTIONS

SHEET REFERENCE NUMBER:
A-05

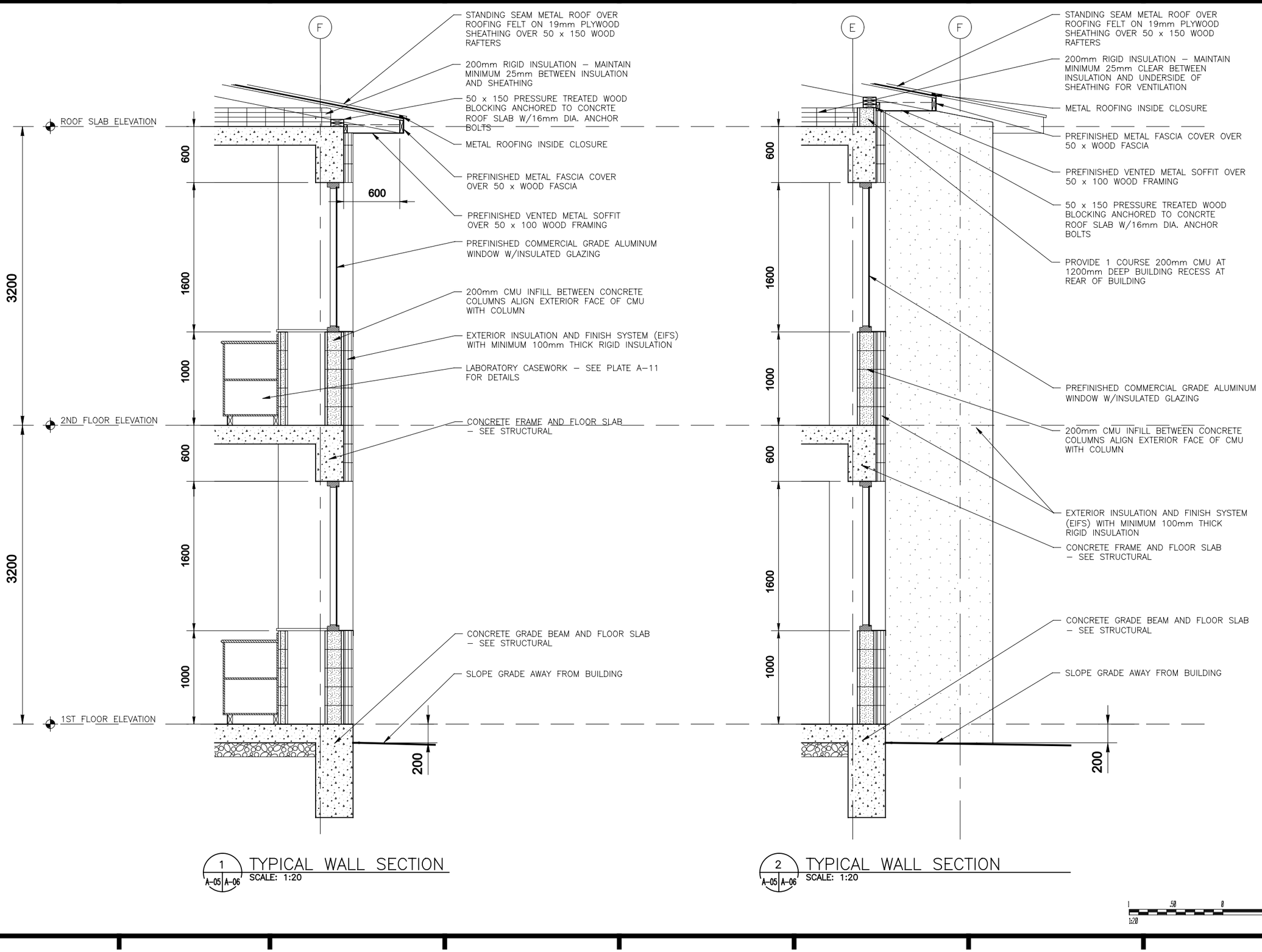

1 A–05 A–06 TYPICAL WALL SECTION
SCALE: 1:20

2 A–05 A–06 TYPICAL WALL SECTION
SCALE: 1:20

1:20

NO.	DESCRIPTION	DATE

DESIGNED BY: JLK | DATE: 27 March 2008
DWN BY: JLK | SUBMITTED BY:
CHK BY: JLK | FILE NO.: FHEp406w

US Army Corps of Engineers
Afghanistan Engineer District

FACULTIES OF HIGHER EDUCATION
VARIOUS LOCATIONS, AFGHANISTAN

TYPICAL WALL SECTIONS

SHEET REFERENCE NUMBER:
A-06

STAIR 001

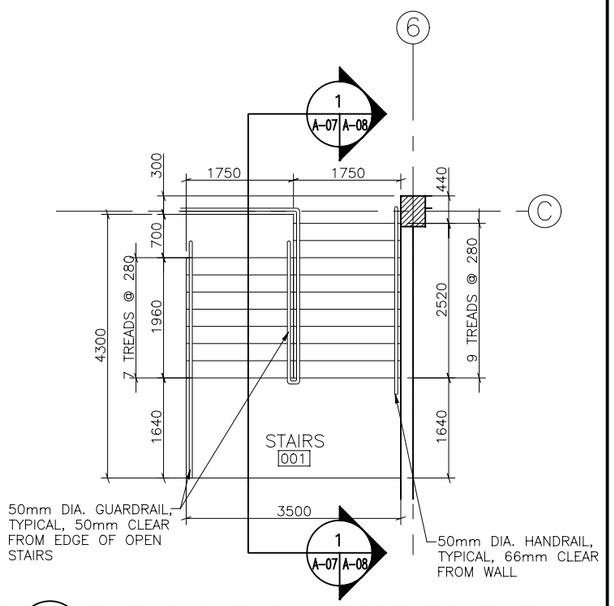

1 A-02 A-07 2ND FLOOR ENLARGED STAIR PLAN
SCALE: 1:50

STAIR 003

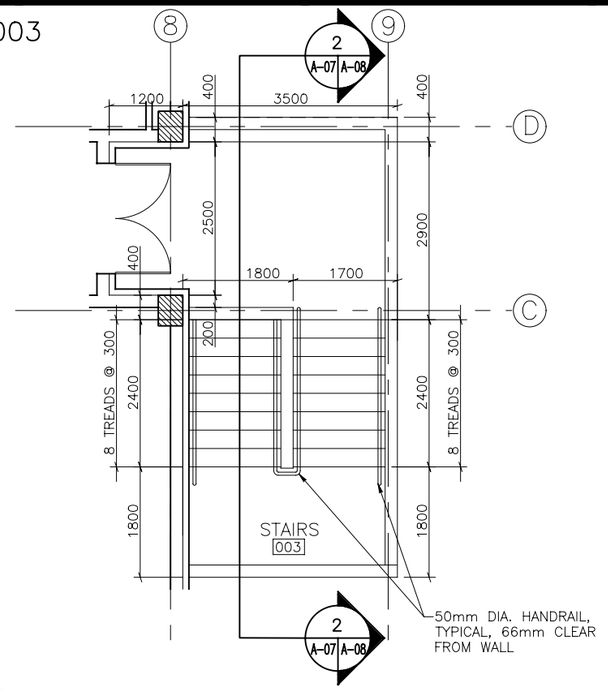

2 A-02 A-07 2ND FLOOR ENLARGED STAIR PLAN
SCALE: 1:50

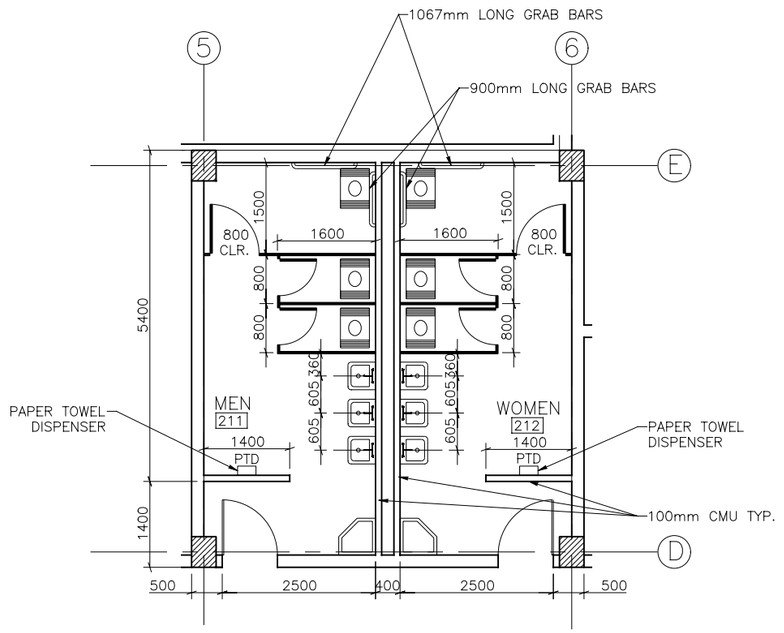

3 A-02 A-07 2ND FLOOR ENLARGED TOILET PLANS
SCALE: 1:50

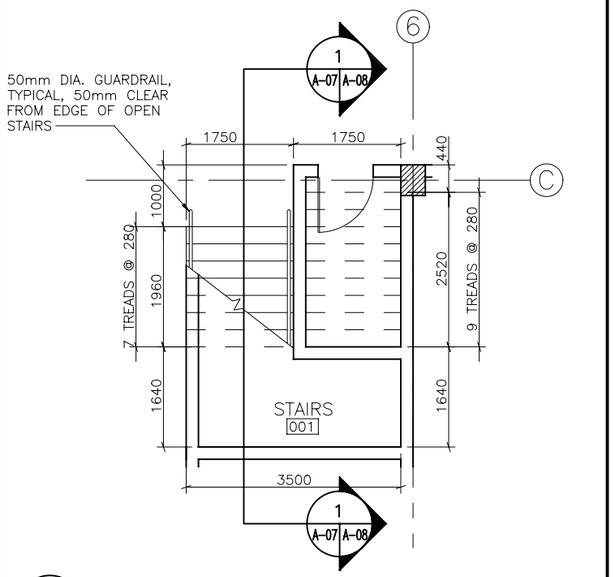

1 A-01 A-07 1ST FLOOR ENLARGED STAIR PLAN
SCALE: 1:50

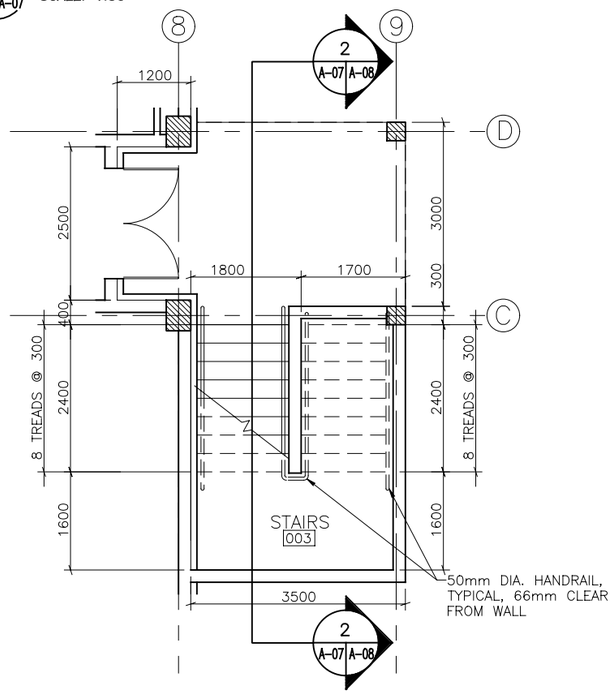

2 A-01 A-07 1ST FLOOR ENLARGED STAIR PLAN
SCALE: 1:50

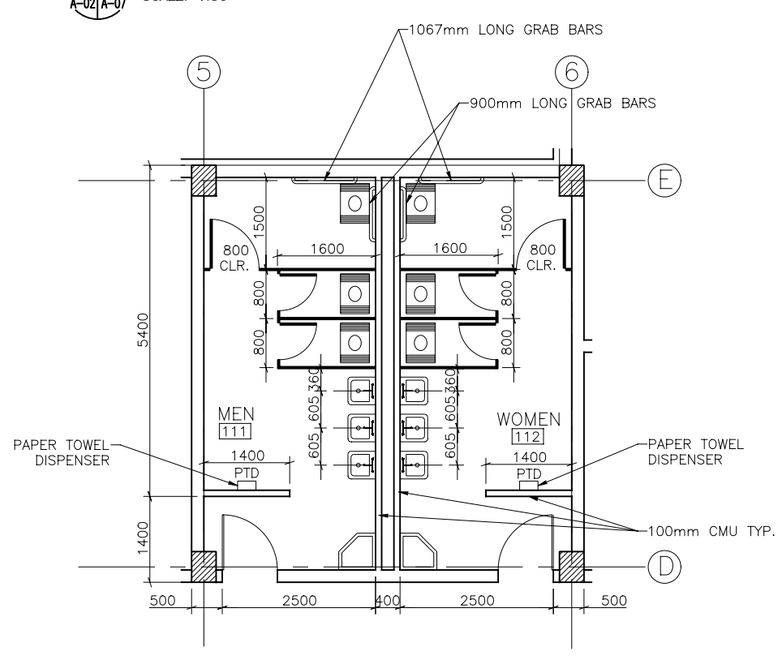

3 A-01 A-07 1ST FLOOR ENLARGED TOILET PLANS
SCALE: 1:50

1:50 0 1 2 3 4

NO.	DESCRIPTION	DATE

DESIGNED BY: JLK
DATE: 27 March 2008
DWN BY: JLK
SUBMITTED BY:
CHK BY: JLK
FILE NO.: FHEq407p

US Army Corps of Engineers
Afghanistan Engineer District

FACULTIES OF HIGHER EDUCATION
VARIOUS LOCATIONS, AFGHANISTAN

ENLARGED TOILET AND STAIR PLANS

SHEET REFERENCE NUMBER:
A-07

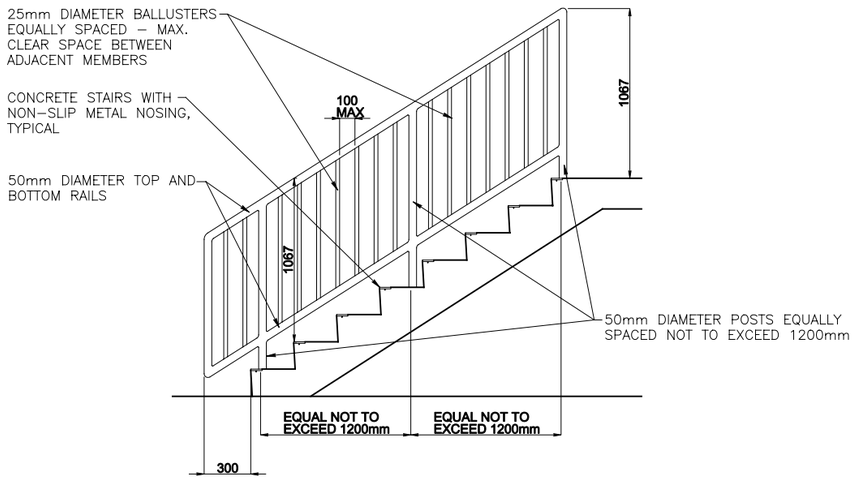

3 A–08 A–08 TYPICAL GUARDRAIL DETAIL
SCALE: 1:20

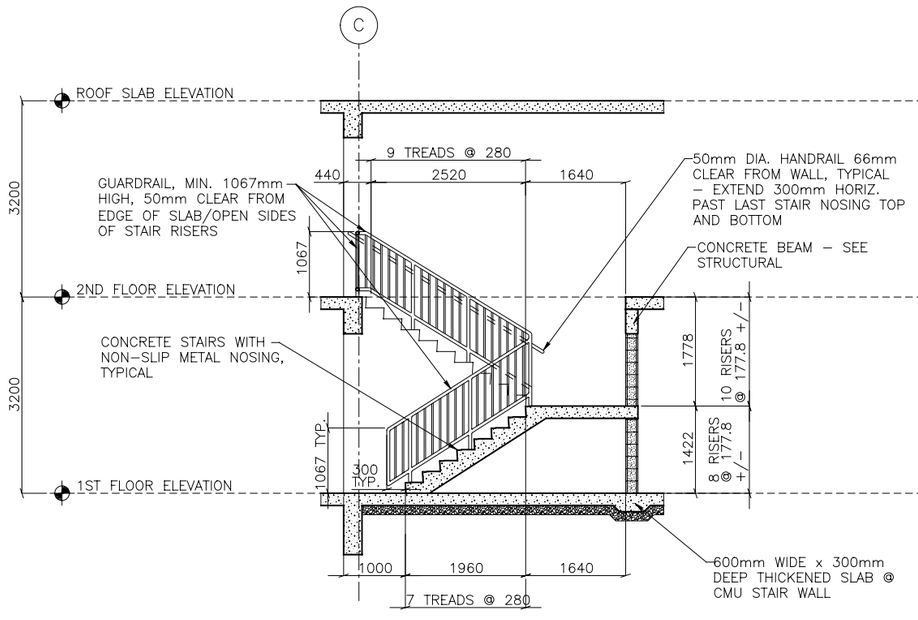

1 A–07 A–08 STAIR 001 SECTION
SCALE: 1:50

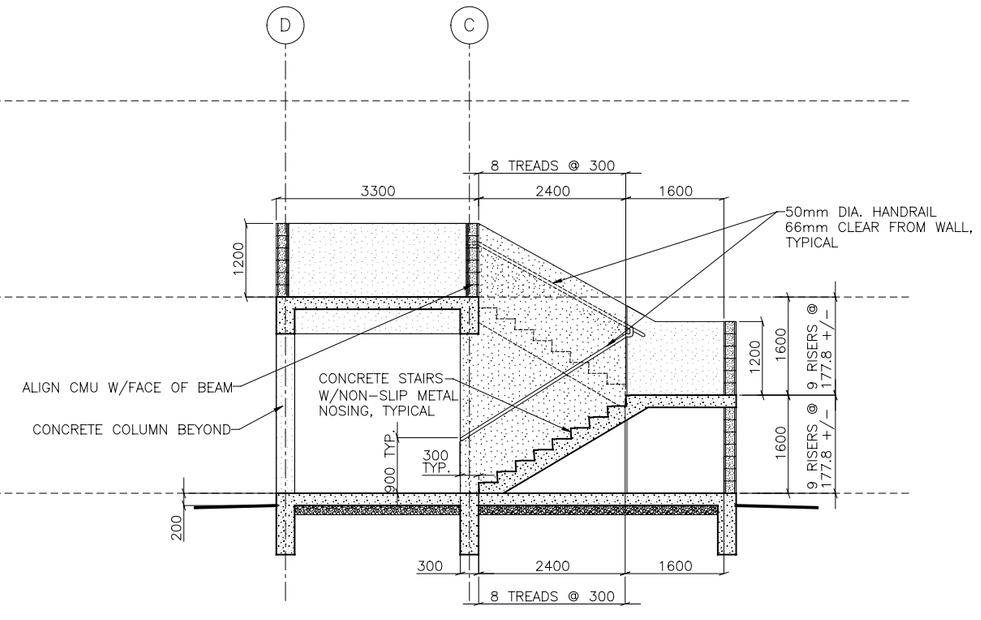

2 A–07 A–08 STAIR 003 SECTION (STAIR 002 OPP. HAND)
SCALE: 1:50

1 0 1 2 3 4
1:50

NO.	DESCRIPTION	DATE

DESIGNED BY: JLK | DRAWN BY: JLK | CHK BY: JLK | DATE: 27 March 2008 | SUBMITTED BY: | FILE NO.: FHEq408s

US Army Corps of Engineers
Afghanistan Engineer District

FACULTIES OF HIGHER EDUCATION
VARIOUS LOCATIONS, AFGHANISTAN

STAIR SECTIONS

SHEET REFERENCE NUMBER:
A-08

DOOR SCHEDULE

DOOR TYPE	DOOR MAT'L	DOOR WIDTH	DOOR HEIGHT	DOOR THICK	FRAME MAT'L	FIRE LABEL	GLAZING	HARDWARE	NOTES
D-1	WOOD	900	2100	45	STEEL	20 MIN.	FIRE RATED/WIRE GLASS	CLASSROOM DEADLOCK (F05), WALL DOOR STOP	1,2,3,4,7,9
D-2	WOOD	900	2100	45	STEEL	1-HR.		UTILITY SPACE DOOR LOCK (F07), WALL DOOR STOP	1,2,3,4,8,9
D-3	WOOD	900	2100	45	STEEL	20 MIN.		PASSAGE LATCH (F01), CLOSER, KICK PLATE	1,2,3,4,5,9
D-4	STEEL	1800	2100	45	STEEL		TEMPERED	PANIC HARDWARE, REMOVABLE MULLION, CLOSERS, KICK PLATES, WALL/FLOOR DOOR STOPS	1,3,4,9
D-5	STEEL	1800	2100	45	STEEL	1-HR.	FIRE RATED/WIRE GLASS	FIRE RATED EXIT (PANIC) HARDWARE, REMOVABLE MULLION, CLOSERS, KICK PLATES, FLOOR DOOR STOPS	1,3,4,9
D-6	WOOD	1350	2100	45	STEEL	20 MIN.	FIRE RATED/WIRE GLASS	CLASSROOM DEADLOCK (F05) ACTIVE LEAF, WALL DOOR STOPS, EXTENSION FLUSH BOLTS ON INACTIVE LEAF	1,2,3,4,7,9
D-7	WOOD	900	2100	45	STEEL			OFFICE DOOR LOCK (F04), WALL DOOR STOP	1,3,4,6,9

DOOR SCHEDULE NOTES

1. ALL DOOR HINGES SHALL BE STAINLESS STEEL.
2. ALL HARDWARE FOR FIRE RATED DOORS SHALL BE FIRE RATED AND LABELED.
3. ALL DOOR FRAMES SHALL BE FITTED WITH DOOR SILENCERS.
4. ALL DOOR LOCKS SHALL BE MORTISED.
5. LOCK FUNCTION F01 – PASSAGE LATCH – LATCH BOLT OPERATED BY LEVER FROM EITHER SIDE AT ALL TIMES.
6. LOCK FUNCTION F04 – OFFICE DOOR LOCK – LATCH BOLT OPERATED BY LEVER FROM EITHER SIDE EXCEPT WHEN OUTSIDE LEVER IS MADE INOPERABLE BY A STOP OR MECHANICAL MEANS OTHER THAN A KEY. WHEN OUTSIDE LEVER IS LOCKED, LATCH BOLT MAY BE RETRACTED BY KEY FROM OUTSIDE OR BY ROTATING INSIDE LEVER.
7. LOCK FUNCTION F05 – CLASSROOM DEADLOCK – LATCH BOLT OPERATED BY LEVER FROM EITHER SIDE EXCEPT WHEN OUTSIDE LEVER IS LOCKED FROM OUTSIDE BY KEY. WHEN OUTSIDE LEVER IS LOCKED, LATCH BOLT MAY BE RETRACTED BY KEY FROM OUTSIDE OR BY ROTATING INSIDE LEVER.
8. LOCK FUNCTION F07 – UTILITY SPACE DOOR LOCK – LATCH BOLT OPERATED BY KEY FROM OUTSIDE OR BY ROTATING INSIDE LEVER. OUTSIDE LEVER IS ALWAYS INOPERATIVE.
9. ALL OTHER FIRE RATING, GLAZING, AND HARDWARE REQUIREMENTS SHALL BE AS INDICATED IN THE SCHEDULE.
10. GLAZING IN ANY FIRE RATED DOOR SHALL NOT EXCEED 0.84 SQUARE METERS.

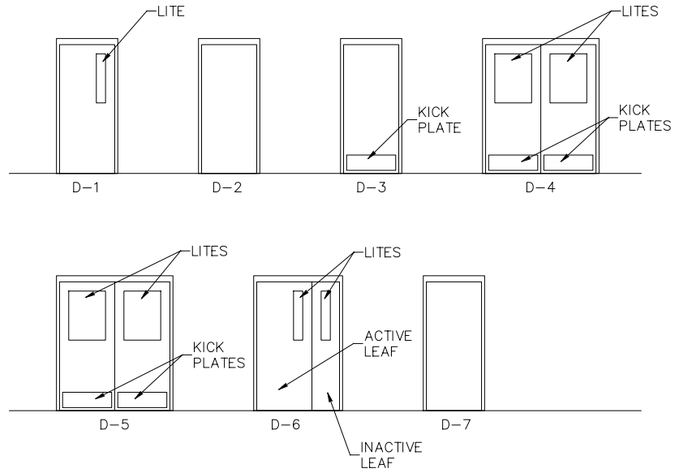

DOOR ELEVATIONS

SCALE: NOT TO SCALE

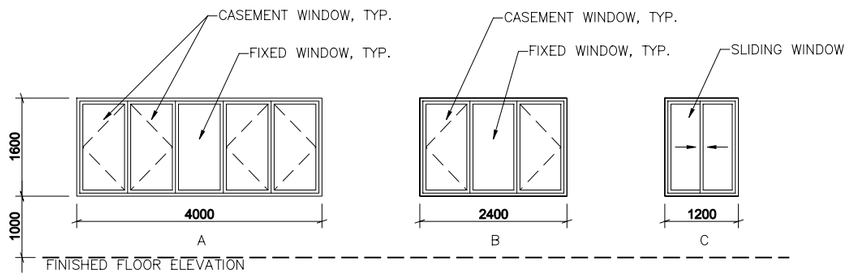

WINDOW ELEVATIONS

SCALE: NOT TO SCALE

WINDOW NOTES

1. ALL WINDOWS SHALL BE COMMERCIAL GRADE, HEAVY DUTY ALUMINUM WINDOWS.
2. ALL EXTERIOR WINDOWS SHALL UTILIZE INSULATED GLAZING.
3. ALL INTERIOR WINDOWS SHALL UTILIZE SINGLE GLAZING SHEET.
4. ALL PANES IN WINDOW TYPE "C" SHALL UTILIZE SAFETY(TEMPERED) GLAZING.

NO.	DESCRIPTION	DATE

DESIGNED BY: JLK | DRAWN BY: JLK | CHK BY: JLK | DATE: 27 March 2008 | SUBMITTED BY: | FILE NO.: FHEa609d

US Army Corps of Engineers
Afghanistan Engineer District

FACULTIES OF HIGHER EDUCATION
VARIOUS LOCATIONS, AFGHANISTAN

DOOR & WINDOW SCHEDULES AND ELEVATIONS

SHEET REFERENCE NUMBER:
A-09

ROOM FINISH SCHEDULE

ROOM NO.	ROOM NAME	FLOOR FINISH	BASE FINISH	WALLS FINISH	WALLS COLOR	CEILING FINISH	CEILING COLOR	REMARKS
001	STAIRS	C		PP	W1/W2	PP	C1	W1 WAINSCOT UP TO 1 METER, W2 ABOVE
002	STAIRS	C		PP	EW1/EW2	PP	C2	EW1 IN HOT CLIMATES, EW2 IN COLD CLIMATES
003	STAIRS	C		PP	EW1/EW2	PP	C2	EW1 IN HOT CLIMATES, EW2 IN COLD CLIMATES
100	VESTIBULE	T	TT	PP	W1/W2	PP	C1	W1 WAINSCOT UP TO 1 METER, W2 ABOVE
101	CORRIDOR	T	TT	PP	W1/W2	PP	C1	W1 WAINSCOT UP TO 1 METER, W2 ABOVE
102	ADMINISTRATION	T	TT	PP	W1/W2	PP	C1	W1 WAINSCOT UP TO 1 METER, W2 ABOVE
103	OFFICE	T	TT	PP	W1/W2	PP	C1	W1 WAINSCOT UP TO 1 METER, W2 ABOVE
104	DIRECTOR	T	TT	PP	W1/W2	PP	C1	W1 WAINSCOT UP TO 1 METER, W2 ABOVE
105	CLASSROOM	T	TT	PP	W1/W2	PP	C1	W1 WAINSCOT UP TO 1 METER, W2 ABOVE
106	CLASSROOM	T	TT	PP	W1/W2	PP	C1	W1 WAINSCOT UP TO 1 METER, W2 ABOVE
107	LABORATORY	T	TT	PP	W1/W2	PP	C1	W1 WAINSCOT UP TO 1 METER, W2 ABOVE
108	STORAGE	SC		PP	W1/W2	PP	C1	W1 WAINSCOT UP TO 1 METER, W2 ABOVE
109	STORAGE	SC		PP	W1/W2	PP	C1	W1 WAINSCOT UP TO 1 METER, W2 ABOVE
110	CLASSROOM	T	TT	PP	W1/W2	PP	C1	W1 WAINSCOT UP TO 1 METER, W2 ABOVE
111	MEN	TT	TT	PP	W1/W2	PP	C2	W1 WAINSCOT UP TO 1 METER, W2 ABOVE
112	WOMEN	TT	TT	PP	W1/W2	PP	C2	W1 WAINSCOT UP TO 1 METER, W2 ABOVE
113	ELECTRICAL ROOM	SC		PP	W1/W2	PP	C1	W1 WAINSCOT UP TO 1 METER, W2 ABOVE
114	LABORATORY	T	TT	PP	W1/W2	PP	C1	W1 WAINSCOT UP TO 1 METER, W2 ABOVE
115	STORAGE	SC		PP	W1/W2	PP	C1	W1 WAINSCOT UP TO 1 METER, W2 ABOVE
116	CLASSROOM	T	TT	PP	W1/W2	PP	C1	W1 WAINSCOT UP TO 1 METER, W2 ABOVE
117	CLASSROOM	T	TT	PP	W1/W2	PP	C1	W1 WAINSCOT UP TO 1 METER, W2 ABOVE
118	RECEPTION	T	TT	PP	W1/W2	PP	C1	W1 WAINSCOT UP TO 1 METER, W2 ABOVE
201	CORRIDOR	T	TT	PP	W1/W2	PP	C1	W1 WAINSCOT UP TO 1 METER, W2 ABOVE
202	NOT USED							
203	LIBRARY	T	TT	PP	W1/W2	PP	C1	W1 WAINSCOT UP TO 1 METER, W2 ABOVE
204	NOT USED							
205	CLASSROOM	T	TT	PP	W1/W2	PP	C1	W1 WAINSCOT UP TO 1 METER, W2 ABOVE
206	CLASSROOM	T	TT	PP	W1/W2	PP	C1	W1 WAINSCOT UP TO 1 METER, W2 ABOVE
207	LABORATORY	T	TT	PP	W1/W2	PP	C1	W1 WAINSCOT UP TO 1 METER, W2 ABOVE
208	STORAGE	SC		PP	W1/W2	PP	C1	W1 WAINSCOT UP TO 1 METER, W2 ABOVE
209	STORAGE	SC		PP	W1/W2	PP	C1	W1 WAINSCOT UP TO 1 METER, W2 ABOVE
210	CLASSROOM	T	TT	PP	W1/W2	PP	C1	W1 WAINSCOT UP TO 1 METER, W2 ABOVE
211	MEN	TT	TT	PP	W1/W2	PP	C2	W1 WAINSCOT UP TO 1 METER, W2 ABOVE
212	WOMEN	TT	TT	PP	W1/W2	PP	C2	W1 WAINSCOT UP TO 1 METER, W2 ABOVE
213	ELECTRICAL ROOM	SC		PP	W1/W2	PP	C1	W1 WAINSCOT UP TO 1 METER, W2 ABOVE
214	LABORATORY	T	TT	PP	W1/W2	PP	C1	W1 WAINSCOT UP TO 1 METER, W2 ABOVE
215	STORAGE	SC		PP	W1/W2	PP	C1	W1 WAINSCOT UP TO 1 METER, W2 ABOVE
216	CLASSROOM	T	TT	PP	W1/W2	PP	C1	W1 WAINSCOT UP TO 1 METER, W2 ABOVE
217	CLASSROOM	T	TT	PP	W1/W2	PP	C1	W1 WAINSCOT UP TO 1 METER, W2 ABOVE

ROOM FINISH SCHEDULE LEGEND

FLOOR FINISH
- SC SEALED CONCRETE
- TT TERRAZZO TILE
- T TERRAZZO
- C CONCRETE

WALL FINISH
- PP PAINTED PLASTER
- CT CERAMIC TILE

BASE FINISH
- TT TERRAZZO TILE
- CT CERAMIC TILE

CEILING FINISH
- PP PAINTED PLASTER

ROOM FINISH COLOR LEGEND

EXTERIOR WALL COLOR HOT CLIMATES
- EW1 SPARCO PAINTS "EARLY DAWN" SEMI-GLOSS

INTERIOR WALL COLOR
- W1 SPARCO PAINTS "OYSTER" SEMI-GLOSS WAINSCOT UP TO 1 METER
- W2 SPARCO PAINTS "ASH WHITE" SEMI-GLOSS ABOVE WAINSCOT TO CEILING ABOVE

EXTERIOR WALL COLOR COLD CLIMATES
- EW2 SPARCO PAINTS "CORIANDER" SEMI-GLOSS

INTERIOR CEILING FINISH
- C1 OFF WHITE FLAT PAINT
- C2 OFF WHITE SEMI-GLOSS PAINT

ROOM FINISH SCHEDULE NOTES:

1. ALL INTERIOR DOORS, WINDOWS, AND FRAMES SHALL HAVE A SEMI-GLOSS FINISH.
2. ALL WALL PENETRATIONS SHALL BE SEALED TO PROVIDE A NEAT APPEARANCE.
3. SEALANT COLORS SHALL MATCH COLOR OF ADJACENT FINISH.

EXTERIOR FINISH NOTES:

1. ALL EXTERIOR DOORS, WINDOWS, FRAMES, SOFFIT, FASCIA, AND TRIM SHALL HAVE A SEMI-GLOSS FINISH.
2. ALL WALL PENETRATIONS SHALL BE SEALED WATER-TIGHT AND SHALL HAVE A NEAT APPEARANCE.
3. SEALANT COLORS SHALL MATCH COLOR OF ADJACENT FINISH.

NO. | DESCRIPTION | DATE

DESIGNED BY: JLK | DRAWN BY: JLK | CHK BY: JLK | DATE: 27 March 2008 | SUBMITTED BY: | FILE NO.: FHE0610f

US Army Corps of Engineers
Afghanistan Engineer District

FACULTIES OF HIGHER EDUCATION
VARIOUS LOCATIONS, AFGHANISTAN

ROOM FINISH SCHEDULE

SHEET REFERENCE NUMBER:
A-10

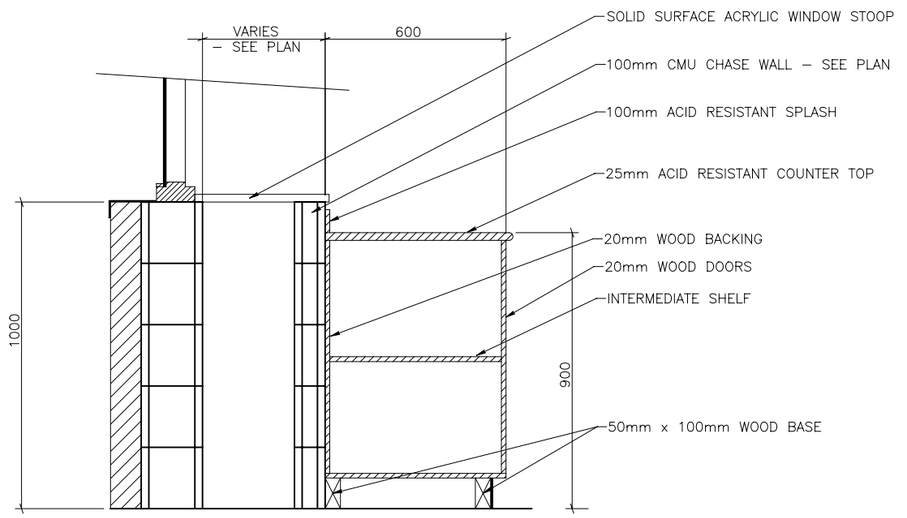

(TYPICAL)

1 A-01 A-11 A-02 LAB CABINET SECTION
SCALE: NOT TO SCALE

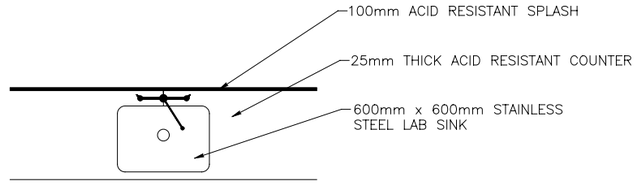

2 A-10 A-11 LAB CABINET PLAN
SCALE: NOT TO SCALE

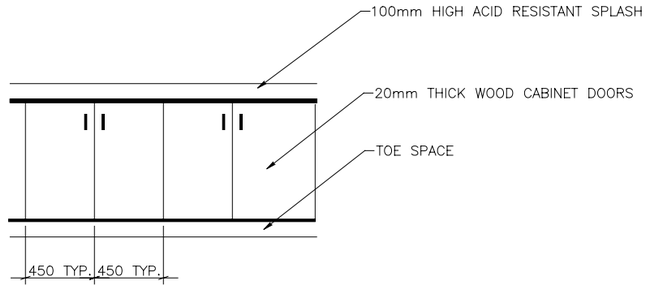

3 A-10 A-11 LAB CABINET ELEVATION
SCALE: NOT TO SCALE

NO.	DESCRIPTION	DATE

DESIGNED BY: JLK
DATE: 27 March 2008
DWN BY: JLK
SUBMITTED BY:
CHK BY: JLK
FILE NO.: FHEa511c

US Army Corps of Engineers
Afghanistan Engineer District

FACULTIES OF HIGHER EDUCATION
VARIOUS LOCATIONS, AFGHANISTAN

CASEWORK DETAILS

SHEET REFERENCE NUMBER:
A-11

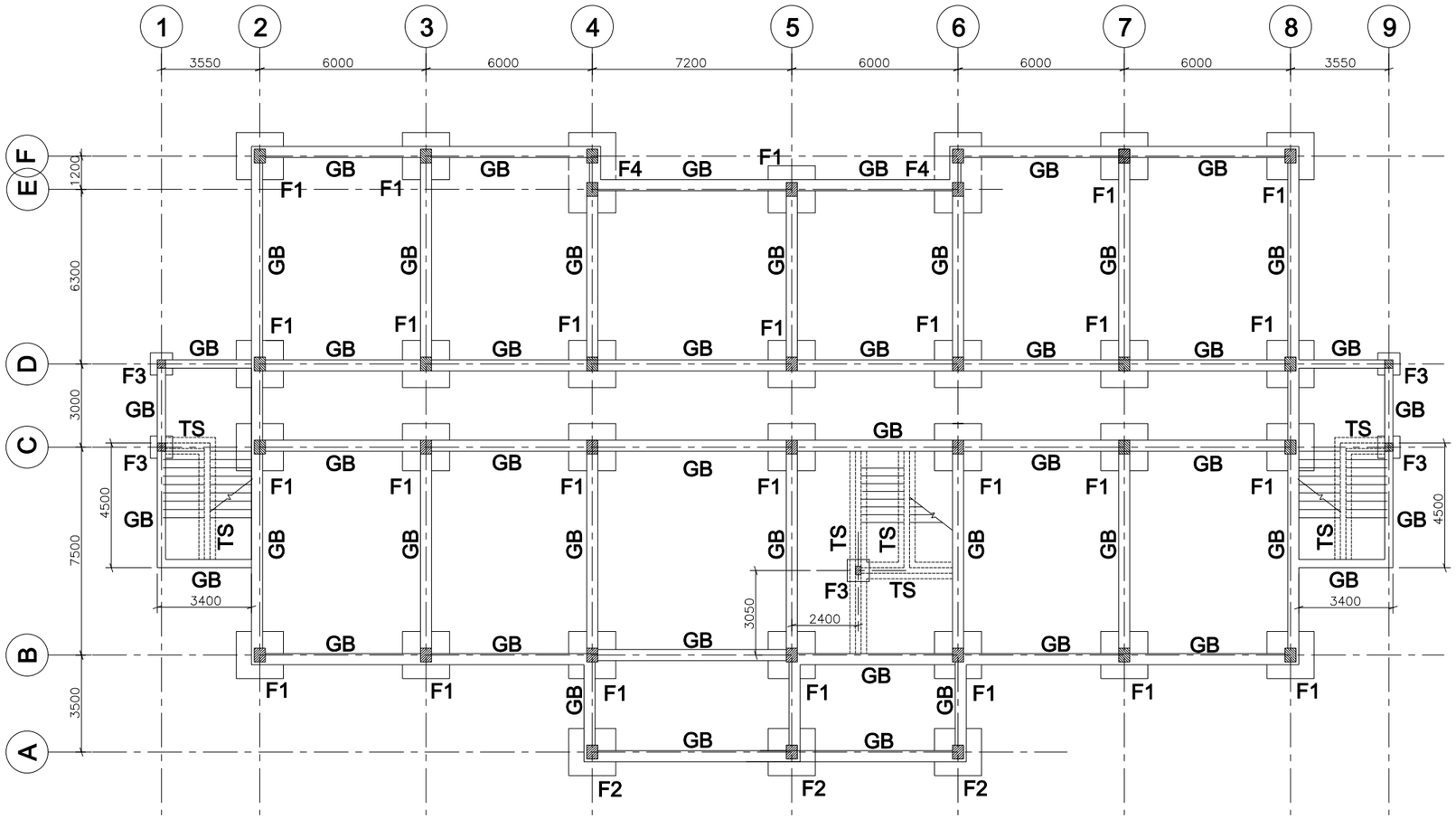

1 S-01 | S-01 FOUNDATION PLAN
SCALE = 1:100

TYPICAL SLAB ON GRADE:
150 THK CONCRETE SLAB WITH D12 BAR @ 300 O.C. OVER
150 THICK CAPILLARY WATER BARRIER WITH 95% COMPACTION, TYP.

GENERAL NOTES:
1. ALLOWABLE SOIL BEARING CAPACITY IS ASSUMED 10 TON/SQ M.
2. CONCRETE: f'C = 210 KG PER SQ CM.
3. REINFORCING BAR: Fy = 4200 KG PER SQ CM.

1:100

DESIGNED BY: JK
DATE: 27 March 2008
DWN BY: JLK
SUBMITTED BY:
CHK BY: JLK
FILE NO.: FHEs101f

US Army Corps of Engineers
Afghanistan Engineer District

FACULTIES OF HIGHER EDUCATION
VARIOUS LOCATIONS, AFGHANISTAN
FOUNDATION PLAN
BASE BID

SHEET REFERENCE NUMBER:
S-01

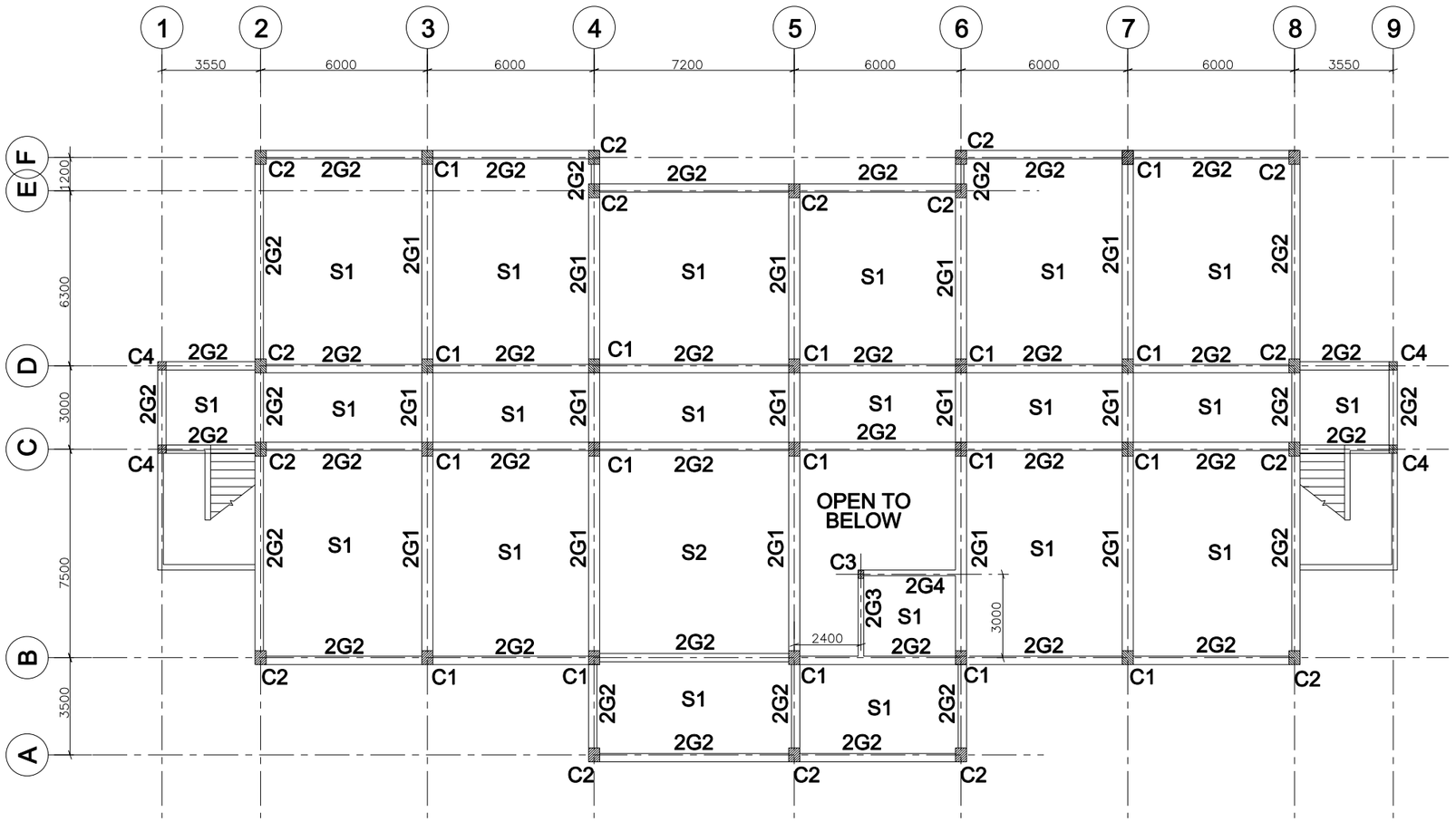

1 FIRST FLOOR FRAMING PLAN
S-02/S-02 SCALE = 1:100

NOTES
1. CONCRETE: f'C = 210 KG PER SQ CM.
2. REINFORCING BAR: Fy = 4200 KG PER SQ CM.

SLAB REINF SCHEDULE

SLAB ID	SL THK	TOP RE BAR	BOTTOM RE BAR
S1	200	D12 - 250 O.C	D12 - 250 O.C
S2	200	D12 - 125 O.C	D12 - 200 O.C

1:100

DESIGNED BY: JK
DATE: 27 March 2008
DWN BY: JLK
SUBMITTED BY:
CHK BY: JLK
FILE NO.: FHEs102f

US Army Corps of Engineers
Afghanistan Engineer District

FACULTIES OF HIGHER EDUCATION
VARIOUS LOCATIONS, AFGHANISTAN
FIRST FLOOR FRAMING PLAN
BASE BID

SHEET REFERENCE NUMBER:
S-02

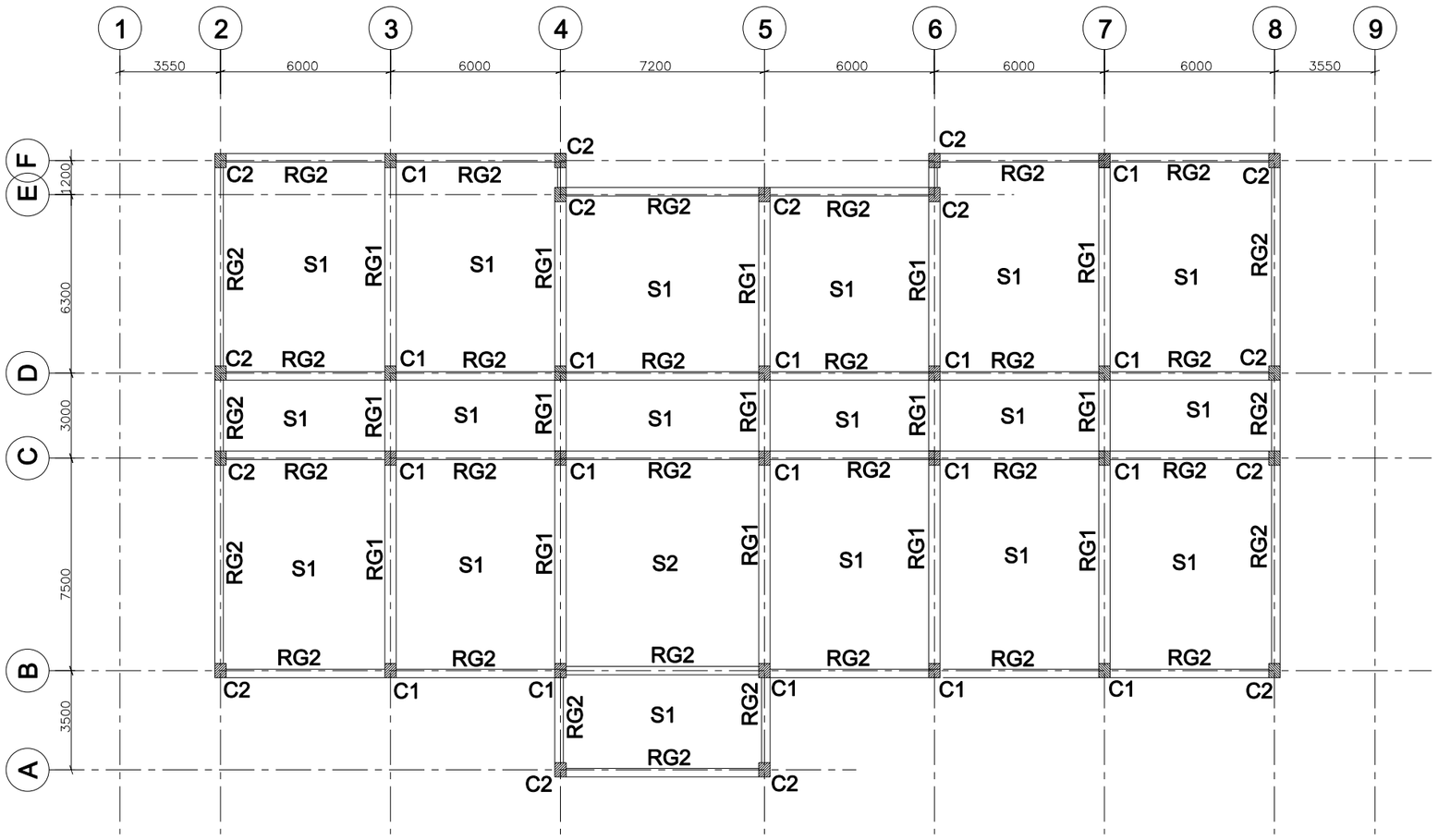

1 S–03|S–03 ROOF FLOOR FRAMING PLAN
SCALE = 1:100

NOTES
1. CONCRETE: f'C = 210 KG PER SQ CM.
2. REINFORCING BAR: Fy = 4200 KG PER SQ CM.

ROOF FL SLAB REINF SCHEDULE

SLAB ID	SL THK	TOP RE BAR	BOTTOM RE BAR
S1	200	D12 - 250 O.C	D12 - 250 O.C
S2	200	D12 - 125 O.C	D12 - 200 O.C

1:100

DESIGNED BY: JK | DRAWN BY: JLK | CHK BY: JLK | DATE: 27 March 2008 | SUBMITTED BY: | FILE NO.: FHEs103r

US Army Corps of Engineers
Afghanistan Engineer District

FACULTIES OF HIGHER EDUCATION
VARIOUS LOCATIONS, AFGHANISTAN

ROOF FLOOR FRAMING PLAN
BASE BID

SHEET REFERENCE NUMBER:
S–03

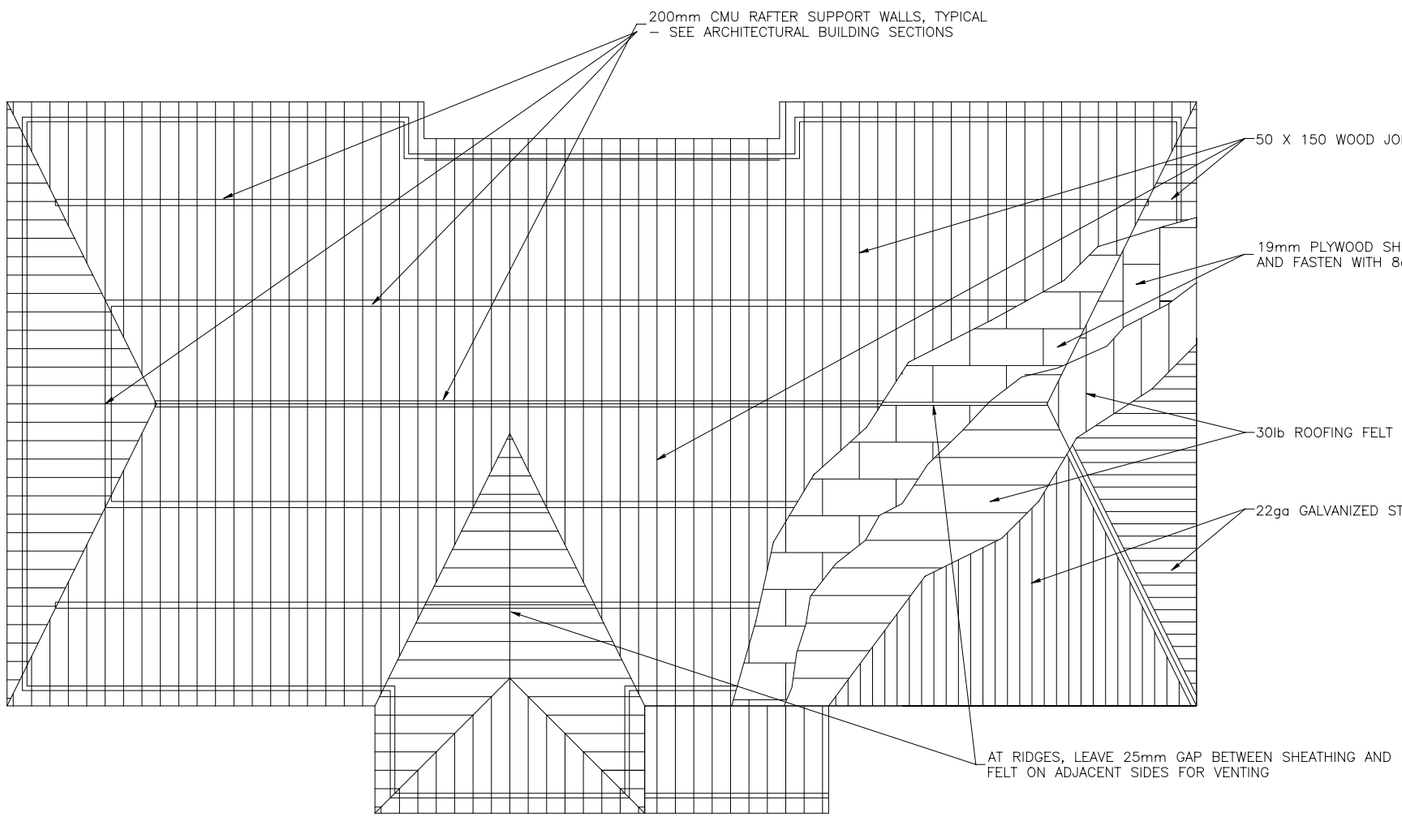

1 S-04 S-04 ROOF FLOOR FRAMING PLAN
SCALE = 1:100

NOTES:

1. REFER TO "ARCHITECTURAL PLAN" FOR BUILDING DIMENSIONS.
2. ALL ROOFING SHALL EXTEND 600mm FROM FACE OF EXTERIOR WALLS, UNLESS NOTED OTHERWISE.

1 0 1 2 3 4 5 6 7 8 9
1:100

NO.	DESCRIPTION	DATE

DESIGNED BY: JK
DWN BY: JLK
CHK BY: JLK
DATE: 27 March 2008
SUBMITTED BY:
FILE NO.: FHEs104r

US Army Corps of Engineers
Afghanistan Engineer District

FACULTIES OF HIGHER EDUCATION
VARIOUS LOCATIONS, AFGHANISTAN

ROOF FRAMING PLAN
BASE BID

SHEET REFERENCE NUMBER:
S–04

COL REINF SCHED

COL ID	SECTION
2C1 1C1	400 X 500 10 - D19 D10 - 200 O.C
2C2 1C2	400 X 500 8 - D19 D10 - 200 O.C
1C3	200 X 300 4 - D19 D10 - 200 O.C
1C4	300 X 300 4 - D19 D10 - 200 O.C

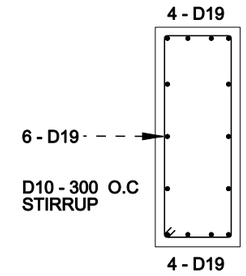

TYP GRADE BEAM (GB)
SECTION (300 X 1000)

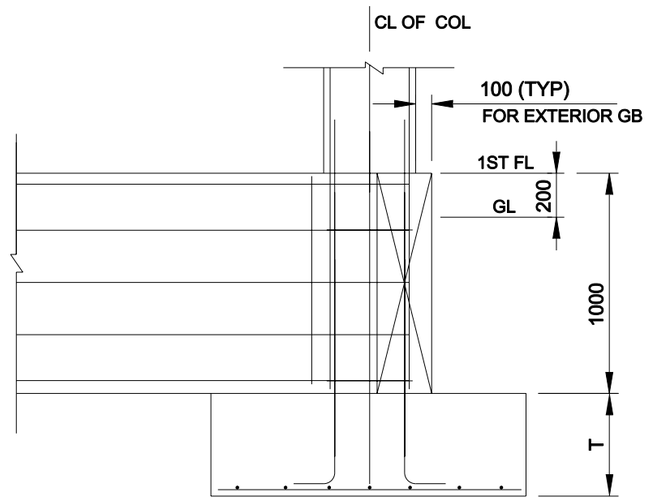

TYP FOOTING SECTION

FOOTING SCHEDULE

FTG ID	DIMENSIONS (MM)			REINFORCING	
	A	B	T	"X" BAR	"Y" BAR
F1	1800	1800	500	D19 @ 200 O.C	D19 @ 200 O.C
F2	1200	1200	500	D19 @ 250 O.C	D19 @ 250 O.C
F3	800	800	300	D19 @ 200 O.C	D19 @ 200 O.C
F4	1800	2700	500	D19 @ 250 O.C	D19 @ 250 O.C

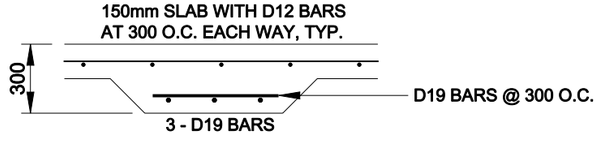

TYP THICKENED SLAB (TS)

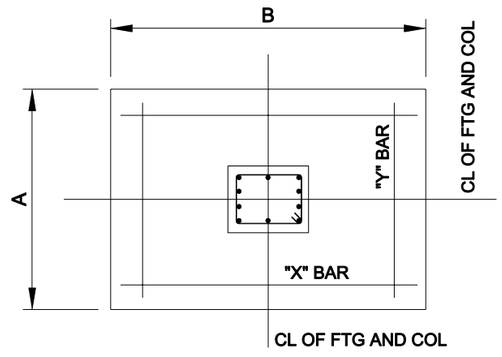

TYP FOOTING PLAN

SEE SHEET S-1 (FOUNDATION PLAN) FOR
GRADE BEAM AND FOUNDATION LOCATION

DESIGNED BY: JK | DATE: 27 March 2008
DWN BY: JLK | SUBMITTED BY:
CHK BY: JLK | FILE NO.: FHEs605c

US Army Corps of Engineers
Afghanistan Engineer District

FACULTIES OF HIGHER EDUCATION
VARIOUS LOCATIONS, AFGHANISTAN

COLUMN AND FOOTING SCHEDULES

SHEET REFERENCE NUMBER:
S–05

GIRDER REINF SCHED

GIRD ID	SECT	REINF LOCATION	DISCONT END	MIDDLE	CONT END	REMARK
RG1	400 W X 600 D	TOP BAR	5 - D22	3 - D22	5 - D22	NONE
		BOTTOM BAR	3 - D22	5 - D22	3 - D22	
		STIRRUP	D10 - 150 O.C	D10 - 250 O.C	D10 - 150 O.C	
RG2 2G2	300 W X 600 D	TOP BAR	4 - D22	2 - D22	4 - D22	NONE
		BOTTOM BAR	2 - D22	4 - D22	2 - D22	
		STIRRUP	D10 - 200 O.C	D10 - 250 O.C	D10 - 120 O.C	
2G1	400 W X 600 D	TOP BAR	6 - D22	2 - D22	7- D22	NONE
		BOTTOM BAR	4 - D22	6 - D22	4 - D22	
		STIRRUP	D10 - 150 O.C	D10 - 250 O.C	D10 - 150 O.C	
2G3	200 W X 600 D	TOP BAR	2 - D19	2 - D19	3 - D19	PROVIDE 2 - D19 ADDITIONAL BARS AT MIDDLE OF GIRDER
		BOTTOM BAR	2 - D19	2 - D19	2 - D19	
		STIRRUP	D10 - 200 O.C	D10 - 200 O.C	D10 - 200 O.C	
2G4 1G4	200 W X 400 D	TOP BAR	2 - D19	2 - D19	2 - D19	NONE
		BOTTOM BAR	2 - D19	2 - D19	2 - D19	
		STIRRUP	D10 - 200 O.C	D10 - 200 O.C	D10 - 200 O.C	

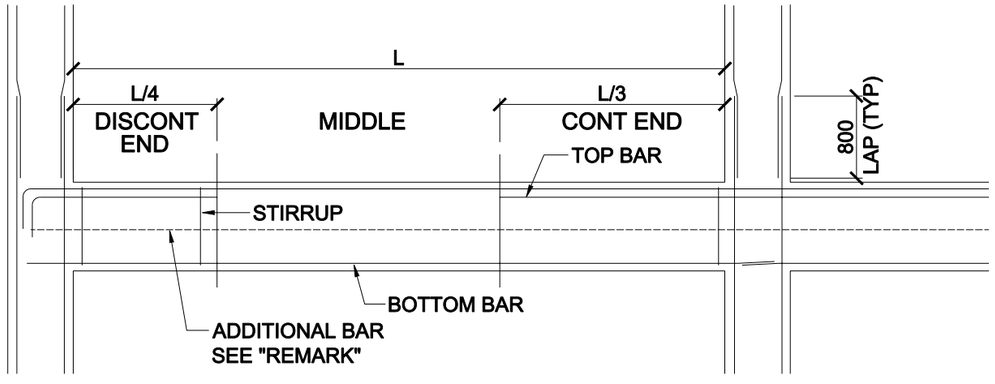

TYP REINF DETAIL

NO.	DESCRIPTION	DATE

DESIGNED BY: JK
DWN BY: JLK
CHK BY: JLK
DATE: 27 March 2008
SUBMITTED BY:
FILE NO.: FHEs606g

US Army Corps of Engineers
Afghanistan Engineer District

FACULTIES OF HIGHER EDUCATION
VARIOUS LOCATIONS, AFGHANISTAN

GIRDER REINFORCING SCHEDULE

SHEET REFERENCE NUMBER:
S–06

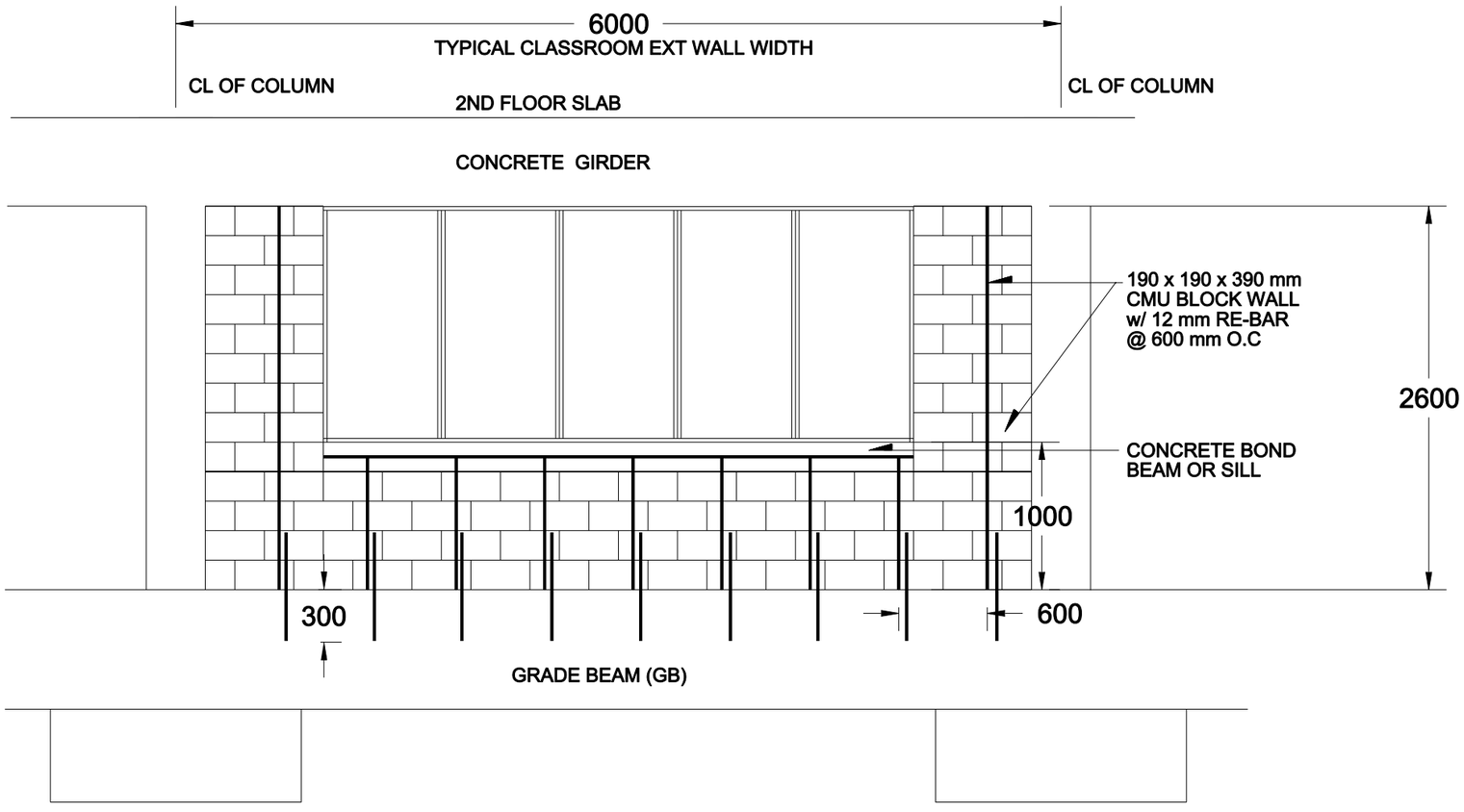

1 S-07 | S-07 TYPICAL CMU WALL REINFORCEMENT DETAIL
SCALE: 1:20

1:20

DESIGNED BY: JK	DWN BY: JLK	CHK BY: JLK	DATE: 27 March 2008
SUBMITTED BY:		FILE NO.: FHEs507c	

US Army Corps of Engineers
Afghanistan Engineer District

FACULTIES OF HIGHER EDUCATION
VARIOUS LOCATIONS, AFGHANISTAN

TYPICAL CMU WALL
REINFORCEMENT DETAIL

SHEET REFERENCE NUMBER:
S-07

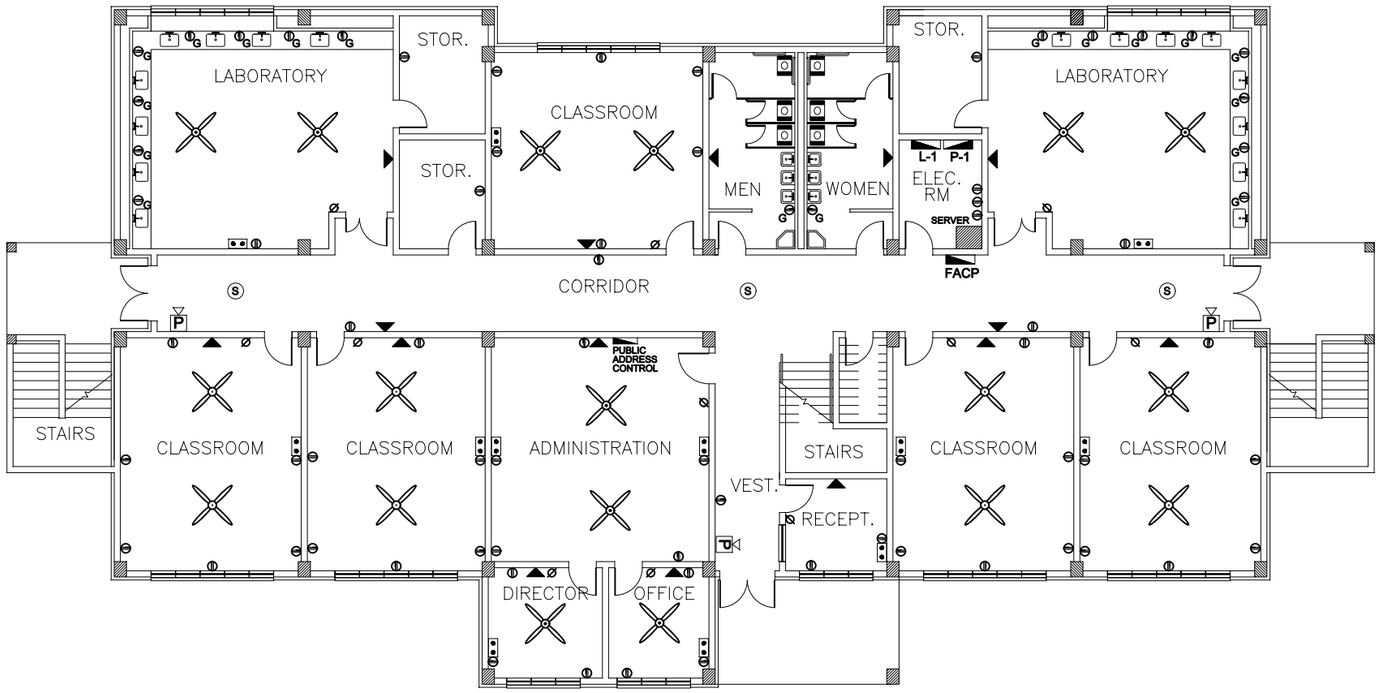

1 FIRST FLOOR POWER PLAN – BASE BID
E-01 | E-01
SCALE: 1:100

LEGEND

- DUPLEX ELECTR OUTLET – H = 300 mm
- DUPLEX ELECTR OUTLET W/GROUND FAULT INDICATOR – H = 1050 mm
- FIRE ALARM W.PULL STATION – H = 1200 mm
- SMOKE DETECTOR – CEILING MTD
- ELECTRICAL PANELS – H = NA
- COMPUTER OUTLET – H = 300 mm
- PUBLIC ADDRESS OUTLET – H = 2200mm
- CEILING FAN W/SWITCH – CEILING MTD
- CEILING FAN SWITCH – H = 1200mm

1:100

NO.	DESCRIPTION	DATE

DESIGNED BY: YC
DRN BY: JLK
CHK BY: JLK
DATE: 27 March 2008
SUBMITTED BY:
FILE NO.: FHEe101p

US Army Corps of Engineers
Afghanistan Engineer District

FACULTIES OF HIGHER EDUCATION
VARIOUS LOCATIONS, AFGHANISTAN

FIRST FLOOR POWER PLAN
BASE BID

SHEET REFERENCE NUMBER:
E-01

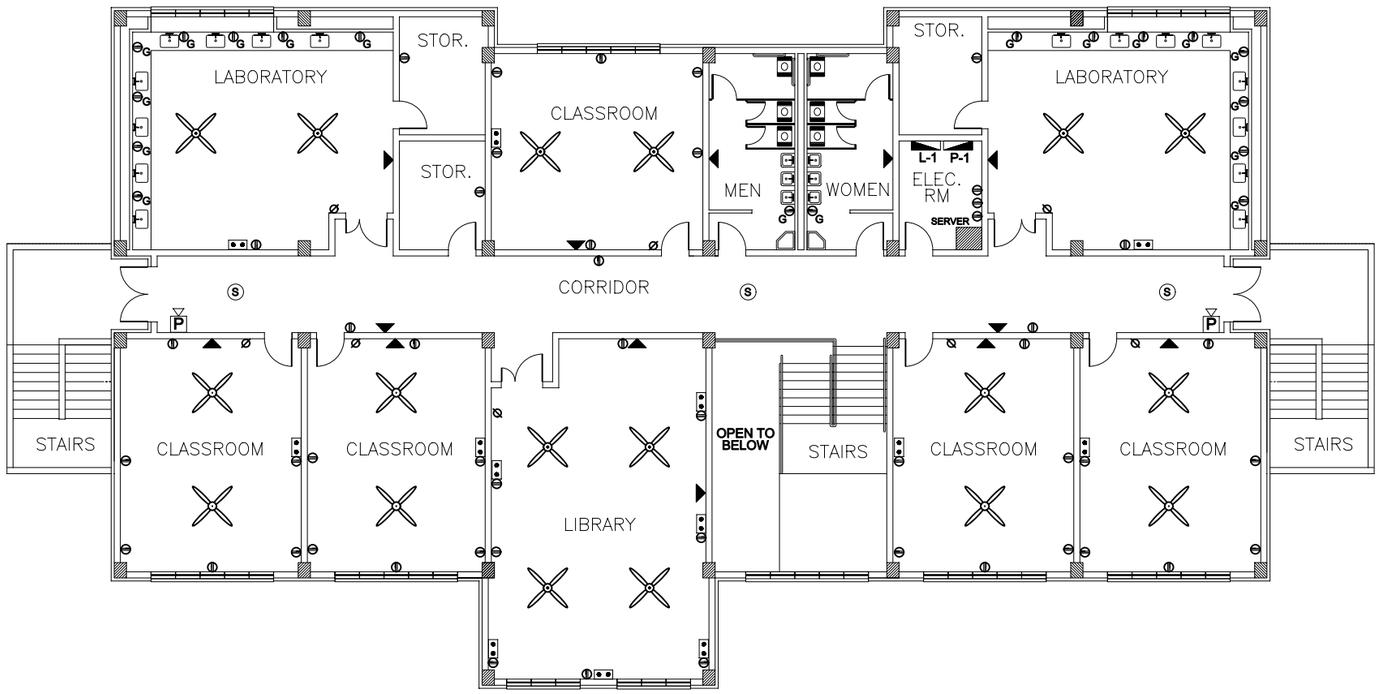

1 SECOND FLOOR POWER PLAN – BASE BID

E-02 | E-02

SCALE: 1:100

LEGEND

- DUPLEX ELECTR OUTLET – H = 300 mm
- DUPLEX ELECTR OUTLET W/GROUND FAULT INDICATOR – H = 1050 mm
- FIRE ALARM W.PULL STATION – H = 1200 mm
- SMOKE DETECTOR – CEILING MTD
- ELECTRICAL PANELS – H = NA
- COMPUTER OUTLET – H = 300 mm
- PUBLIC ADDRESS OUTLET – H = 2200mm
- CEILING FAN W/SWITCH – CEILING MTD
- CEILING FAN SWITCH – H = 1200mm

NUMBER	DESCRIPTION	DATE

DESIGNED BY: YC
DWN BY: JLK
CHK BY: JLK
DATE: 27 March 2008
SUBMITTED BY:
FILE NO.: FHEe102p

US Army Corps of Engineers
Afghanistan Engineer District

FACULTIES OF HIGHER EDUCATION
VARIOUS LOCATIONS, AFGHANISTAN

SECOND FLOOR POWER PLAN
BASE BID

SHEET REFERENCE NUMBER:
E-02

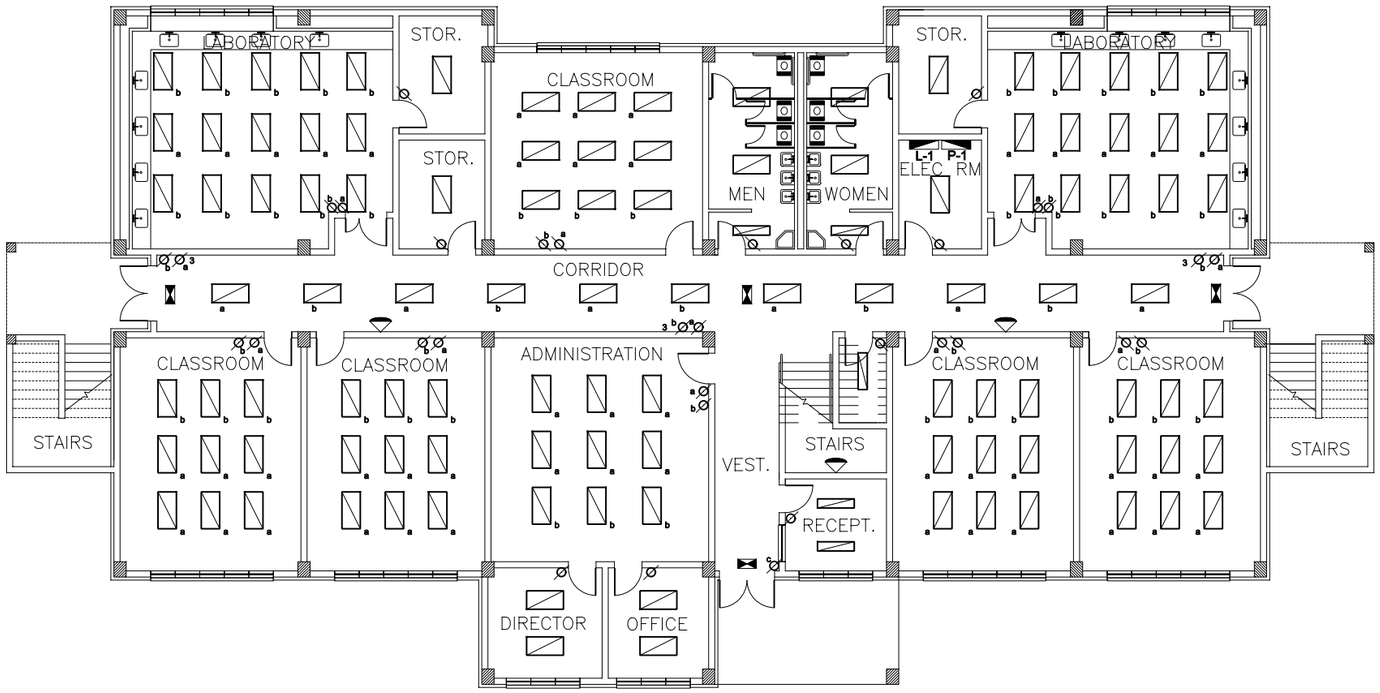

1 E-03 | E-03 FIRST FLOOR LIGHTING PLAN – BASE BID

SCALE: 1:100

LEGEND

- LIGHT FIXTURE (600 X 1200)
- LIGHT FIXTURE (300 X 1200)
- 3 3-WAY SWITCH
- SWITCH
- EXIT SIGN
- EMERGENCY LIGHT

NO.	DESCRIPTION	DATE

DESIGNED BY: YC | DATE: 27 March 2008
DWN BY: JLK | SUBMITTED BY:
CHK BY: JLK | FILE NO.: FHEe103i

US Army Corps of Engineers
Afghanistan Engineer District

FACULTIES OF HIGHER EDUCATION
VARIOUS LOCATIONS, AFGHANISTAN

FIRST FLOOR LIGHTING PLAN
BASE BID

SHEET REFERENCE NUMBER:
E-03

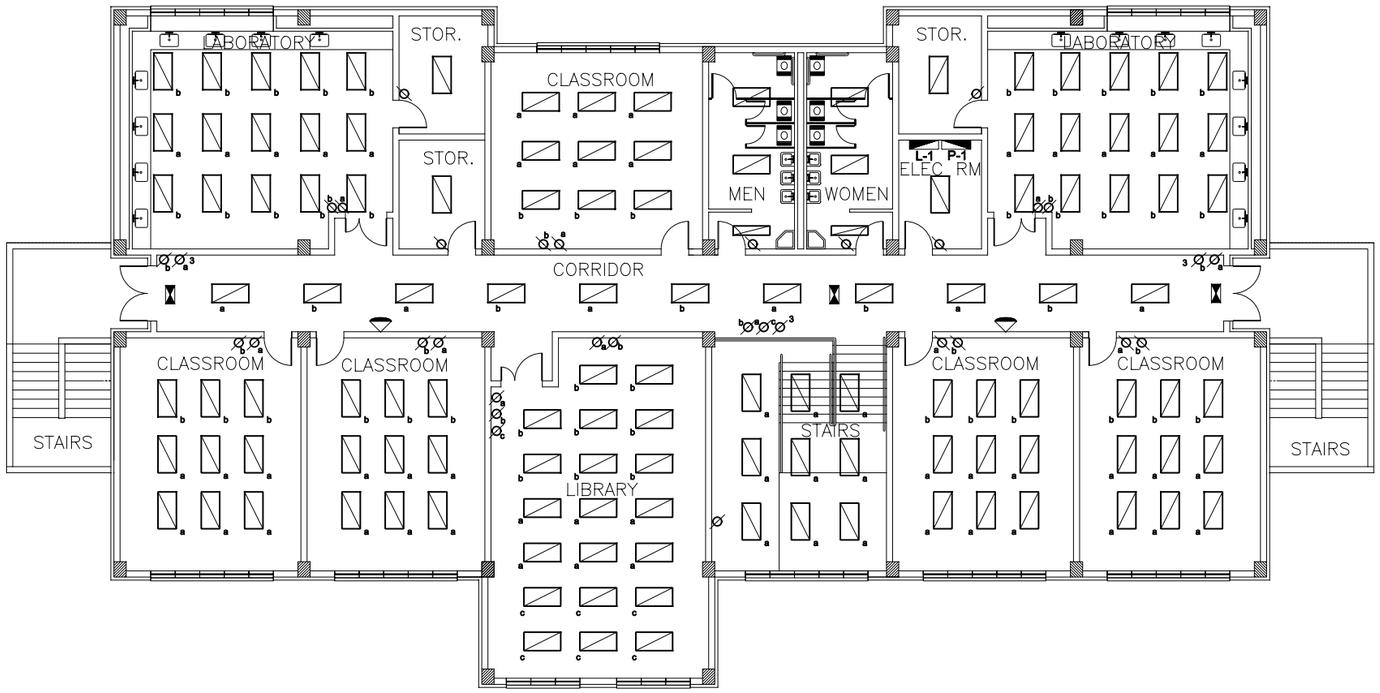

1 E-04 | E-04 SECOND FLOOR LIGHTING PLAN – BASE BID
SCALE: 1:100

LEGEND

- LIGHT FIXTURE (600 X 1200)
- LIGHT FIXTURE (300 X 1200)
- 3 Ø 3–WAY SWITCH
- Ø SWITCH
- EXIT SIGN
- EMERGENCY LIGHT

NO.	DESCRIPTION	DATE

DESIGNED BY: YC | DATE: 27 March 2008
DWN BY: JLK | SUBMITTED BY:
CHK BY: JLK | FILE NO.: FHEe104

US Army Corps of Engineers
Afghanistan Engineer District

FACULTIES OF HIGHER EDUCATION
VARIOUS LOCATIONS, AFGHANISTAN

SECOND FLOOR LIGHTING PLAN
BASE BID

SHEET REFERENCE NUMBER:
E–04

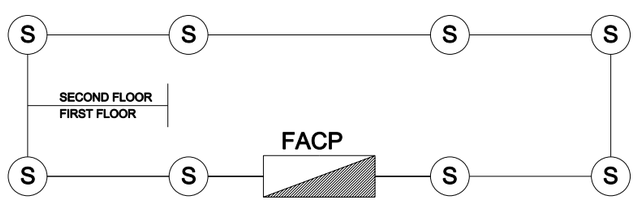

SMOKE ALARM RISER DIAGRAM

NOTE: ALL CABLING FOR BOTH PA AND SMOKE DETECTOR SYSTEMS ARE IN RIGID, EXPOSED 20 mm DIAMETER CONDUIT, CONDUCTOR TYPE AND SIZE TO BE DETERMINED BY CONTRACTOR

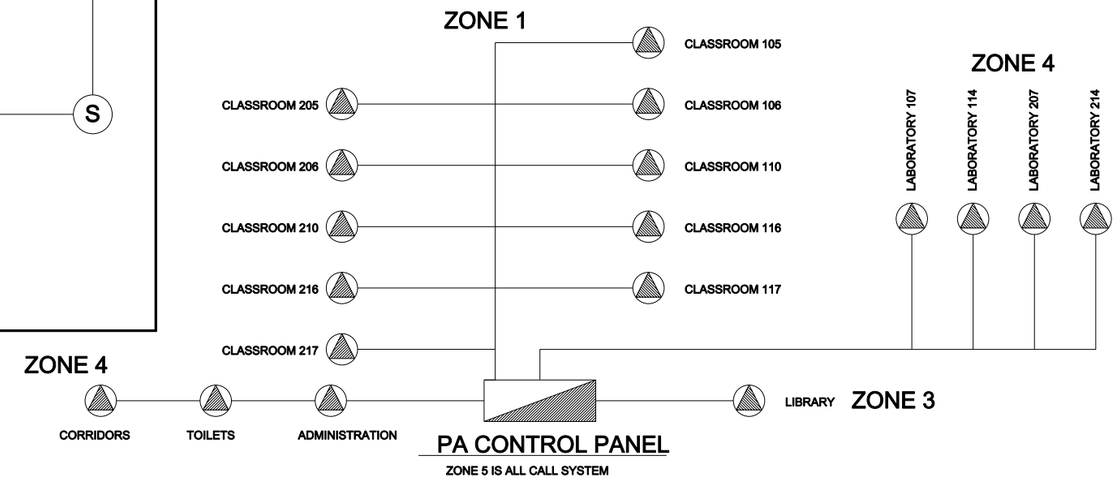

1 E-05 | E-05 PUBLIC ADDRESS RISER DIAGRAM
SCALE: NOT TO SCALE

DESIGNED BY: YC | DATE: 27 March 2008
DWN BY: JLK | SUBMITTED BY:
CHK BY: JLK | FILE NO.: FHEe605c

US Army Corps of Engineers
Afghanistan Engineer District

FACULTIES OF HIGHER EDUCATION
VARIOUS LOCATIONS, AFGHANISTAN

PUBLIC ADDRESS RISER DIAGRAM – BASE BID

SHEET REFERENCE NUMBER:
E–05

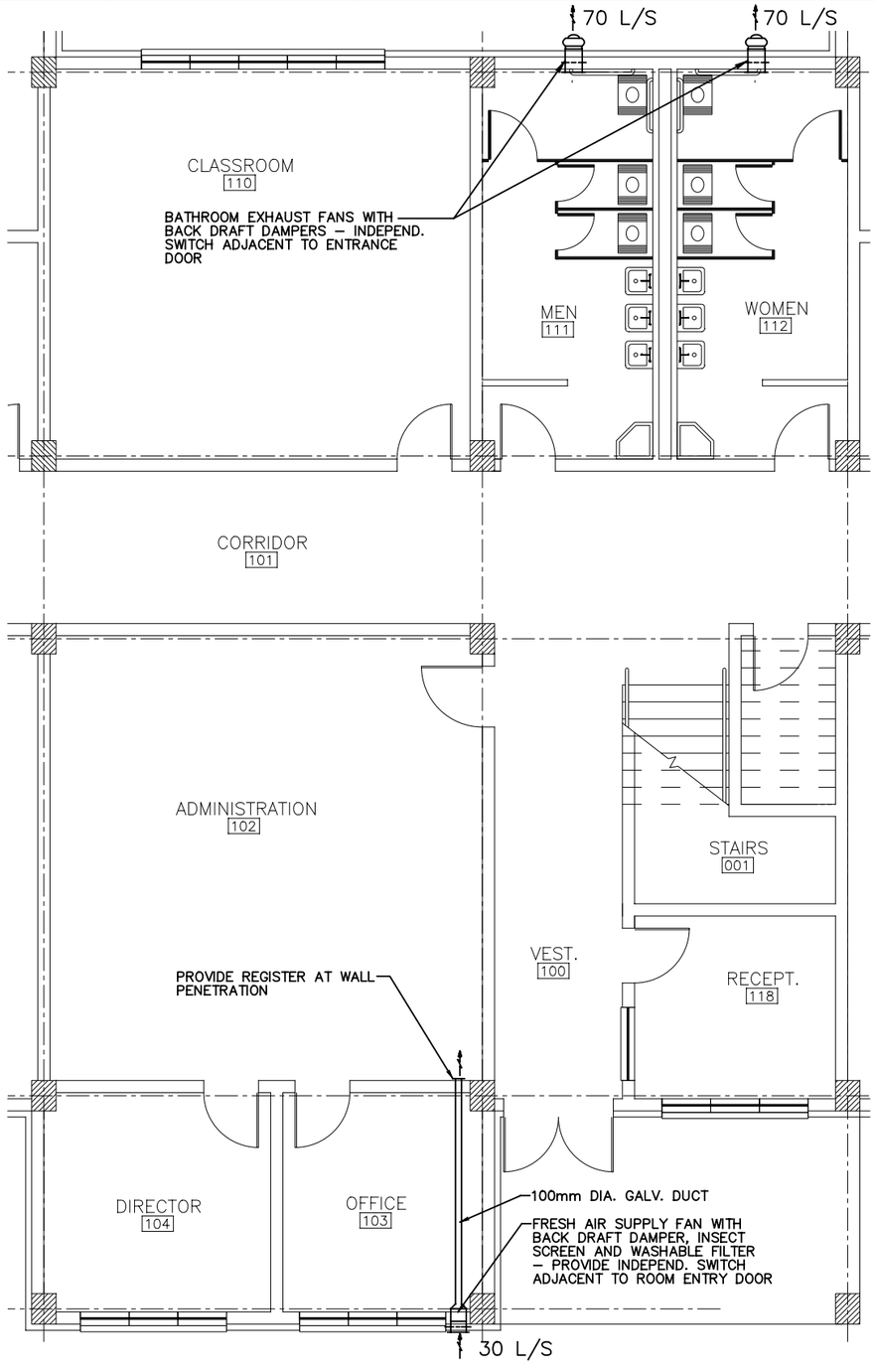

1 M-01 M-01 1ST FLOOR PARTIAL VENTILATION PLAN
SCALE: 1:50

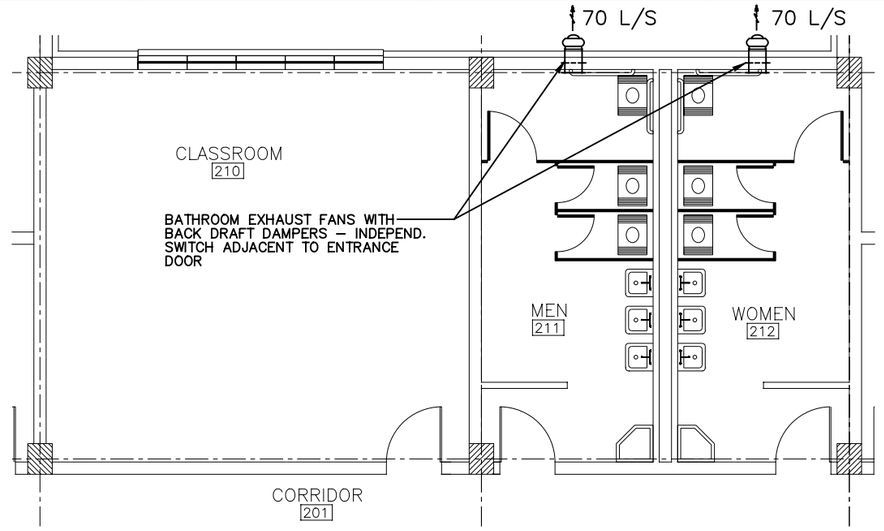

2 M-01 M-01 2ND FLOOR PARTIAL VENTILATION PLAN
SCALE: 1:50

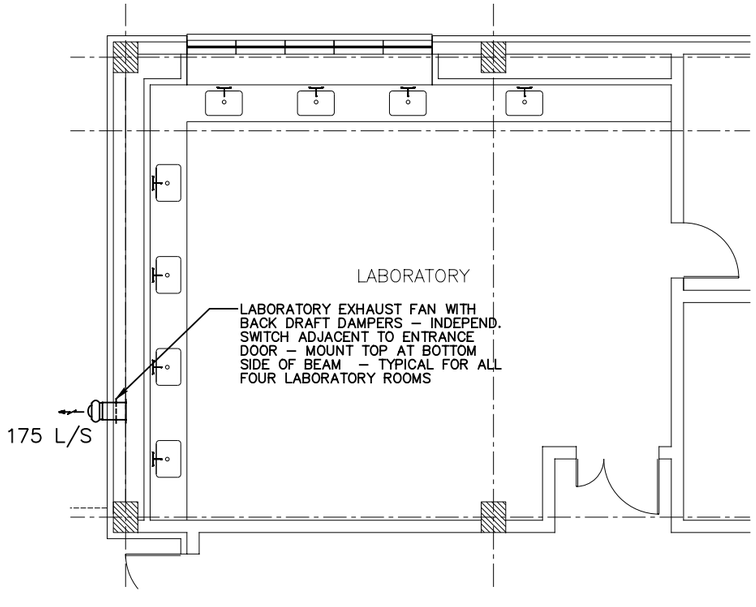

3 M-01 M-01 LABORATORY VENTILATION PLAN (TYPICAL FOR 4)
SCALE: 1:50

1:50

DESIGNED BY:	DRAWN BY:	CHK BY:	DATE:
JLK	JLK	JLK	27 March 2008

SUBMITTED BY:

FILE NO.: FHEm401h

US Army Corps of Engineers
Afghanistan Engineer District

FACULTIES OF HIGHER EDUCATION
VARIOUS LOCATIONS, AFGHANISTAN

VENTILATION PLANS

SHEET REFERENCE NUMBER:
M-01

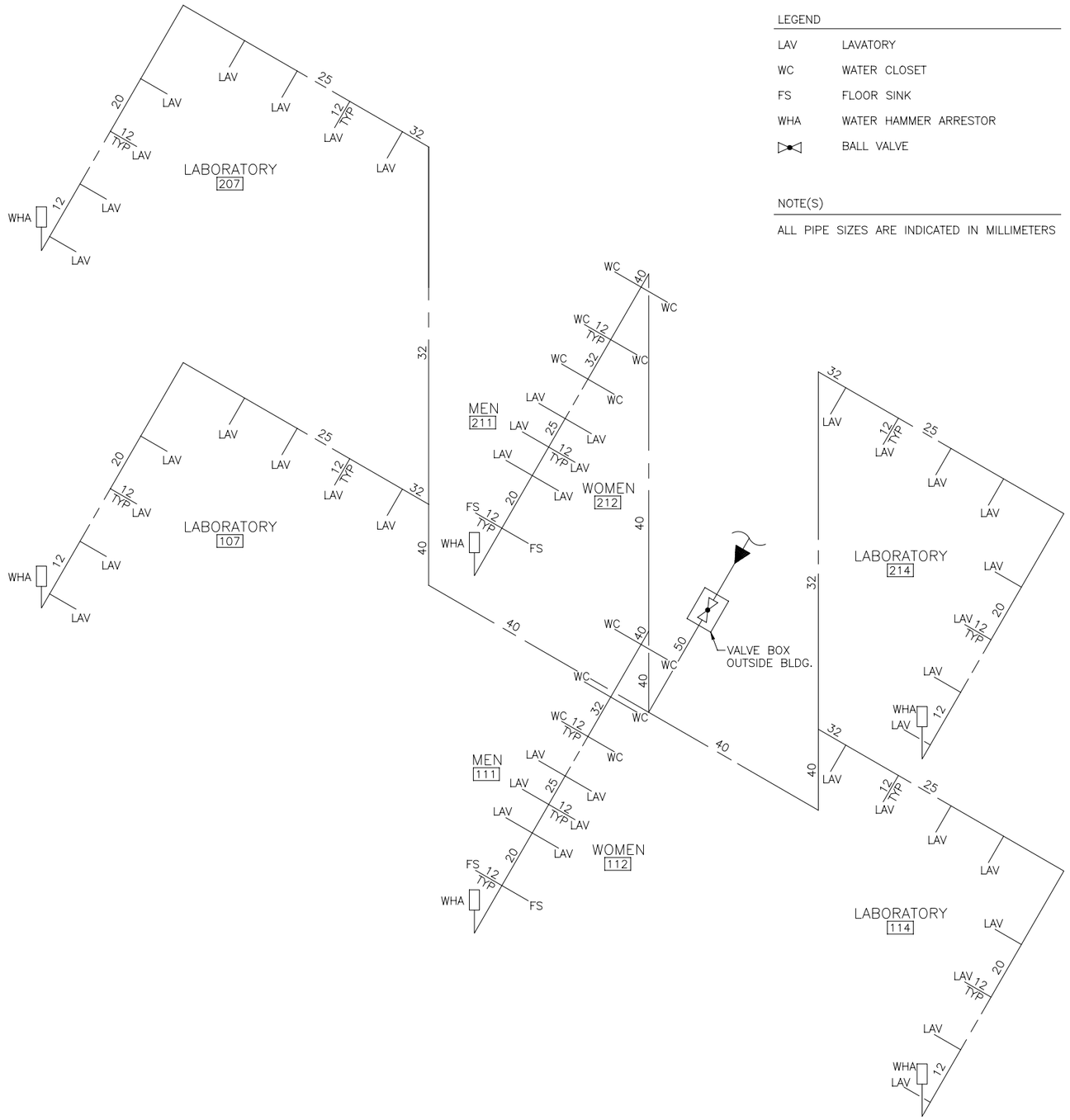

1 P-01 | P-01 DOMESTIC WATER RISER DIAGRAM
SCALE: NOT TO SCALE

NO.	DESCRIPTION	DATE

DESIGNED BY: TK
DRN BY: JLK
CHK BY: JLK
DATE: 27 March 2008
SUBMITTED BY:
FILE NO.: FHEp401w

US Army Corps of Engineers
Afghanistan Engineer District

FACULTIES OF HIGHER EDUCATION
VARIOUS LOCATIONS, AFGHANISTAN

DOMESTIC WATER RISER DIAGRAM

SHEET REFERENCE NUMBER:
P-01

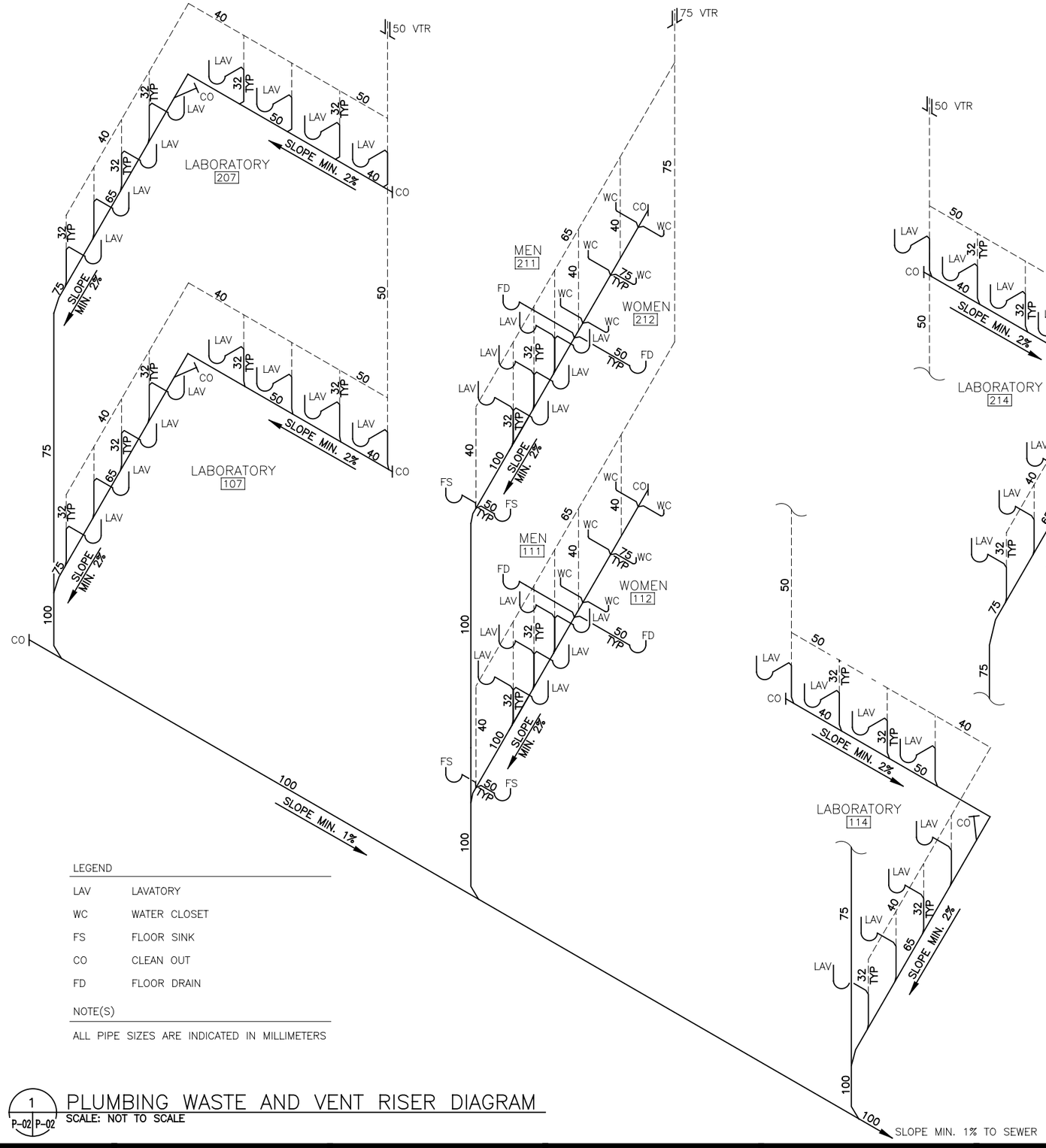

LEGEND	
LAV	LAVATORY
WC	WATER CLOSET
FS	FLOOR SINK
CO	CLEAN OUT
FD	FLOOR DRAIN

NOTE(S)

ALL PIPE SIZES ARE INDICATED IN MILLIMETERS

1 P-02 P-02 PLUMBING WASTE AND VENT RISER DIAGRAM
SCALE: NOT TO SCALE

NO.	DESCRIPTION	DATE

DESIGNED BY: TK
DRAWN BY: JLK
CHK BY: JLK
DATE: 27 March 2008
SUBMITTED BY:
FILE NO.: FHEp402w

US Army Corps of Engineers
Afghanistan Engineer District

FACULTIES OF HIGHER EDUCATION
VARIOUS LOCATIONS, AFGHANISTAN

PLUMBING WASTE AND VENT RISER DIAGRAM

SHEET REFERENCE NUMBER:
P-02

APPENDIX B – 1335a Attachments AED

TRANSMITTAL OF SHOP DRAWINGS, EQUIPMENT DATA, MATERIAL SAMPLES, OR MANUFACTURER'S CERTIFICATES OF COMPLIANCE

(Read instructions on the reverse side prior to initiating this form)

DATE

TRANSMITTAL NO.

SECTION I - REQUEST FOR APPROVAL OF THE FOLLOWING ITEMS *(This section will be initiated by the contractor)*

TO:

FROM:

CONTRACT NO.

CHECK ONE:
☐ THIS IS A NEW TRANSMITTAL
☐ THIS IS A RESUBMITTAL OF TRANSMITTAL _____

SPECIFICATION SEC. NO. *(Cover only one section with each transmittal)*

PROJECT TITLE AND LOCATION

CHECK ONE: THIS TRANSMITTAL IS FOR ☐ FIO ☐ GOVT. APPROVAL

ITEM NO.	DESCRIPTION OF ITEM SUBMITTED (Type size, model number/etc.)	MFG OR CONTR. CAT., CURVE DRAWING OR BROCHURE NO. (See instruction no. 8)	NO. OF COPIES	CONTRACT REFERENCE DOCUMENT		FOR CONTRACTOR USE CODE	VARIATION (See instruction No. 6)	FOR CE USE CODE
				SPEC. PARA. NO.	DRAWING SHEET NO.			
a.	b.	c.	d.	e.	f.	g.	h.	i.

REMARKS

I certify that the above submitted items have been reviewed in detail and are correct and in strict conformance with the contract drawings and specifications except as other wise stated.

NAME AND SIGNATURE OF CONTRACTOR

SECTION II - APPROVAL ACTION

ENCLOSURES RETURNED *(List by item No.)*

NAME, TITLE AND SIGNATURE OF APPROVING AUTHORITY

DATE

ENG FORM 4025-R, MAR 95 *(ER 415-1-10)* EDITION OF SEP 93 IS OBSOLETE. SHEET ___ OF ___ (Proponent: CEMP-CE)

INSTRUCTIONS

1. Section I will be initiated by the Contractor in the required number of copies.

2. Each transmittal shall be numbered consecutively in the space provided for "Transmittal No.". This number, in addition to the contract number, will form a serial number for identifying each submittal. For new submittals or resubmittals mark the appropriate box; on resubmittals, insert transmittal number of last submission as well as the new submittal number.

3. The "Item No." will be the same "Item No." as indicated on ENG FORM 4288-R for each entry on this form.

4. Submittals requiring expeditious handling will be submitted on a separate form.

5. Separate transmittal form will be used for submittals under separate sections of the specifications.

6. A check shall be placed in the "Variation" column when a submittal is not in accordance with the plans and specifications--also, a written statement to that effect shall be included in the space provided for "Remarks".

7. Form is self-transmittal, letter of transmittal is not required.

8. When a sample of material or Manufacturer's Certificate of Compliance is transmitted, indicate "Sample" or "Certificate" in column c, Section I.

9. U.S. Army Corps of Engineers approving authority will assign action codes as indicated below in space provided in Section I, column i to each item submitted. In addition they will ensure enclosures are indicated and attached to the form prior to return to the contractor. The Contractor will assign action codes as indicated below in Section I, column g, to each item submitted.

THE FOLLOWING ACTION CODES ARE GIVEN TO ITEMS SUBMITTED

A	--	Approved as submitted.	E	--	Disapproved (See attached).
B	--	Approved, except as noted on drawings.	F	--	Receipt acknowledged.
C	--	Approved, except as noted on drawings. Refer to attached sheet resubmission required.	FX	--	Receipt acknowledged, does not comply as noted with contract requirements.
D	--	Will be returned by separate correspondence.	G	--	Other *(Specify)*

10. Approval of items does not relieve the contractor from complying with all the requirements of the contract plans and specifications.

(Reverse of ENG Form 4025-R)

Contractor - Furnished Design Documents Submittal Register		Contract Title & Location:			
		Contractor:	Contract Number:		
Submittal Identification Nº.	NAS Activity Code	Description of Document (s)	Contractor Submittal Date	Government Action	
				Receipt Date	Construction Clearance Date

TAC Form 122-E
September 2003(R)

SUBMITTAL REGISTER

(ER 415 1-10)

CONTRACT NO.

TITLE AND LOCATION

CONTRACTOR

SPECIFICATION SECTION

					TYPE OF SUBMITTAL									CLASSIFICATION			CONTRACTOR SCHEDULE DATES			CONTRACTOR ACTION			GOVERNMENT ACTION		
ACTIVITY NO	TRANSMITTAL NO.	ITEM NO	SPECIFICATION PARAGRAPH NUMBER	DESCRIPTION OF ITEM SUBMITTED	DATA	DRAWINGS	INSTRUCTIONS	SCHEDULES	STATEMENTS	REPORTS	CERTIFICATES	SAMPLES	RECORDS	INFORMATION ONLY	GOVERNMENT APPROVED	REVIEWER	SUBMIT	APPROVAL NEEDED BY	MATERIAL NEEDED BY	CODE	DATE	SUBMIT TO GOVERNMENT	CODE	DATE	REMARKS
a.	b.	c.	d.	e.	f.	g.	h.	i.	j.	k.	l.	m.	n.	o.	p.	q.	r.	s.	t.	u.	v.	w.	x.	y.	z.

ENG FORM 4288-R, MAR 95 EDITION OF SEP 93 IS OBSOLETE. PAGE 1 OF ____ PAGES (Proponent: CEMP-CE)

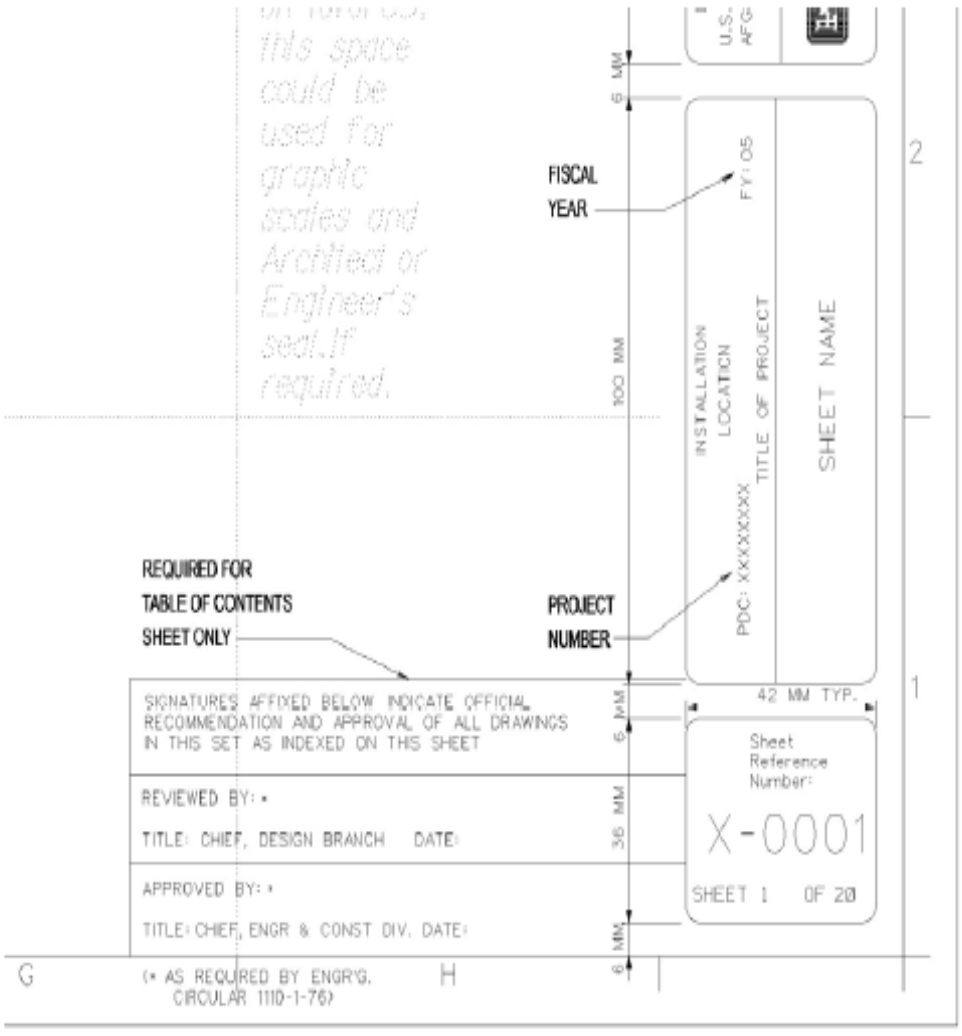

Figure 1- AED Title Block sheet number/description

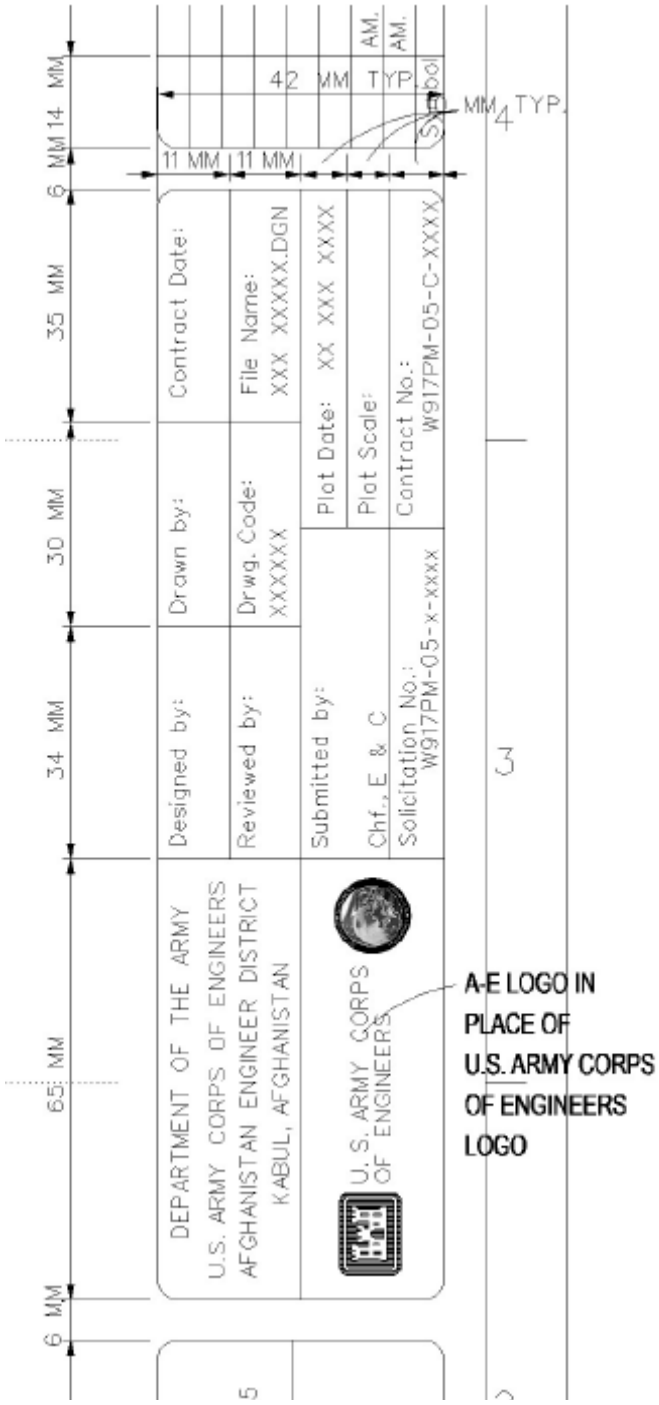

Figure 2- AED Title Block- A-E logo/designed by/reviewed by/submitted by

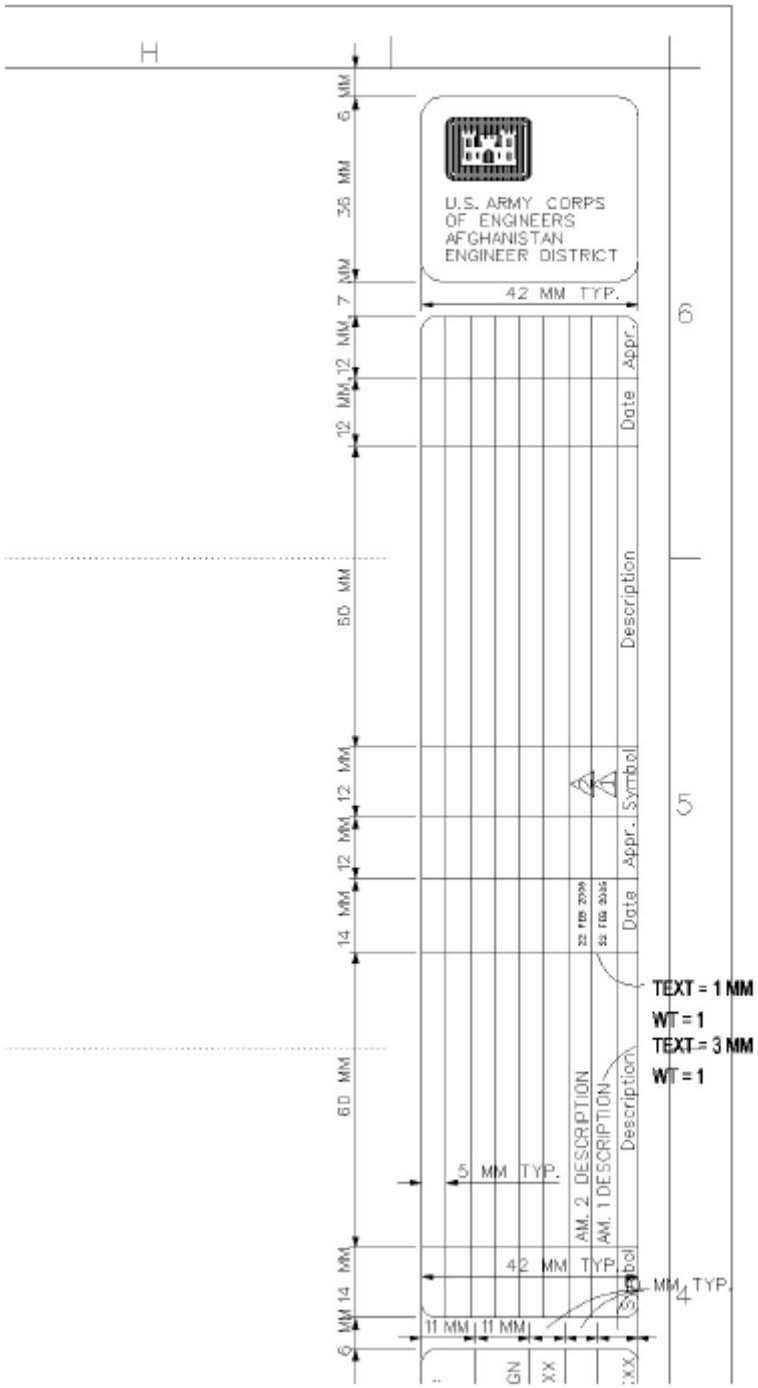

Figure 3- AED Title Block-Revisions Block Dimensioning

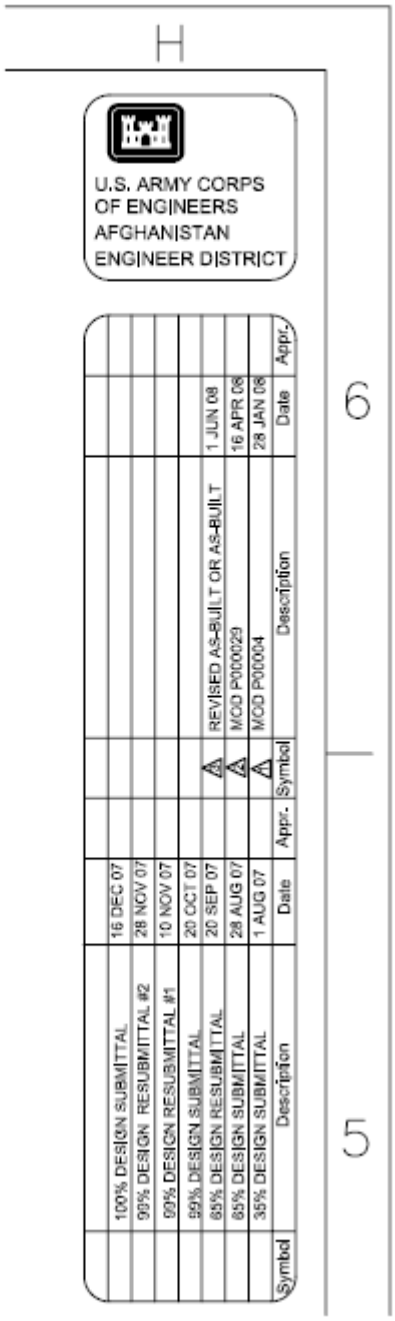

Figure 4- AED Title Block-Revisions Block Required Notations

FINISHED FORMAT SIZE

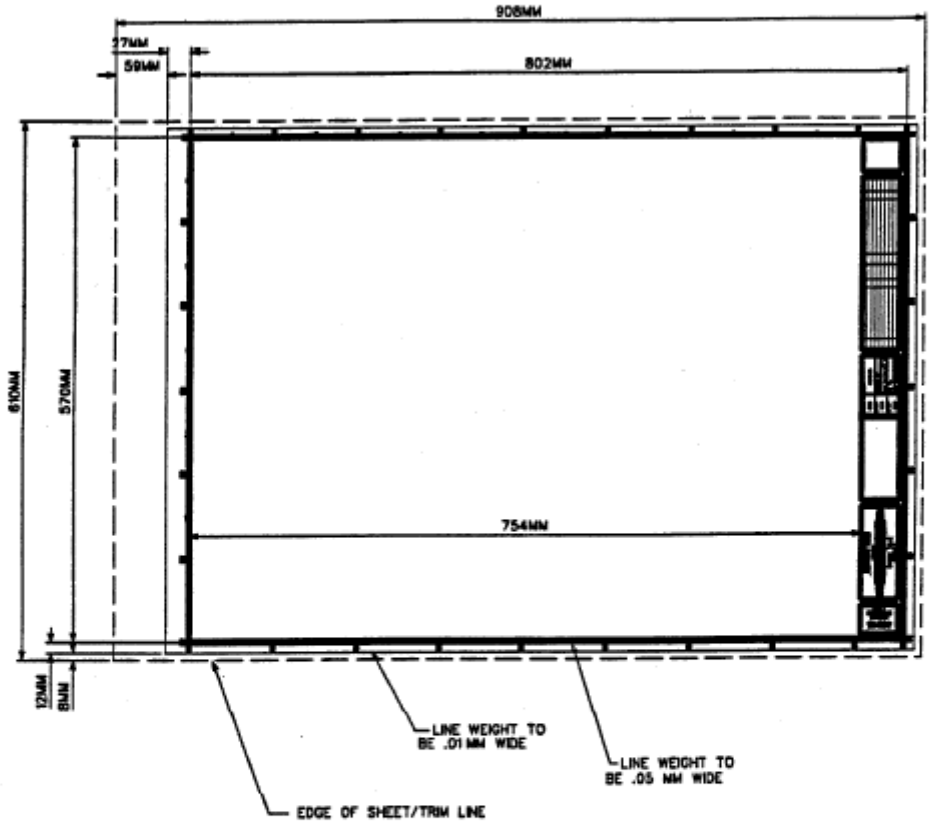

NOTES:

1. SEE FIGURES 6 THRU 9 FOR TITLE BLOCK DEFINITIONS.

Figure 5

APPENDIX C Design Review Checklists US

These checklists are intended to serve only as a guide in checking or reviewing design documents for errors and omissions. It cannot substitute for the exercise of sound engineering judgment by reviewers. Professionals must maintain control of their decisions, understand the technical basis for those decisions, and independently evaluate significant data upon which the design decisions are based. The main usefulness of a checklist such as these is to provide a "minimum" check of consistency between disciplines, and compatibility of drawings to specifications.

Each item in the checklist must be checked off to indicate that the item has been reviewed, or marked "NA" to indicate it is not applicable. The items in the checklist shall be "checked" by a senior architect/engineer or the designer's supervisor. Blocks labeled "QC Check By:" shall be filled out with the names of such individuals.

In other words, items on the checklist shall not be "checked" or marked by the designer. However, designers are encouraged to utilize these checklists to ensure that their designs meet applicable items shown in the checklist.

Quality Control Checklist
(DETAILED CHECK)

_____
(insert design organization's name)

Project Name: _____

Location: _____

Project Number: _____

Designer (A-E/in-house): _____

Checked By:

Civil:_____

Structural:_____

Architectural:_____

Mechanical: _____

Electrical: _____

Cost Estimating:_____

Specifications: _____

CADD:_____

Date:_____

General Remarks:

General Quality:

A. CIVIL

Quality Control Checklist **Civil Section**
(DETAILED CHECK)

_____
(insert design organization's name)

Concept Submittal (35%)

Project Name: _____

Location: _____

Project Number: _____ Date:_____

Civil Engineer:_____ QC Check By:_____

Check when complete, or mark NA if not applicable. Add comments to clarify as appropriate.

Drawings

- ❑ Location and Vicinity Map. Show project location, borrow and waste areas.
- ❑ Sketch plan showing proposed buildings, parking and roads superimposed on existing topography.
- ❑ Show critical clearances between proposed and existing facilities.
- ❑ Number of parking space, handicapped parking
- ❑ Access for fire trucks road provided?
- ❑ Sketch plan showing proposed locations of parking, roadways, controlled perimeter, trash containers meet the required standoff distance in accordance the latest DOD AT/FP Standards for Buildings.
- ❑ Sketch plan showing proposed buildings and existing buildings meet the required buildings separation in accordance the latest DOD AT/FP Standards for Buildings.
- ❑ AT/FP check-off list is provided.
- ❑ Plan showing existing utilities including line sizes.
- ❑ Pavement section showing materials, thickness, and compaction.

- ❑ A minimum of one section through the proposed building showing excavation lines and earthwork.

Design Analysis

Siting

- ❑ Description of the site conditions.
- ❑ Include soils report
- ❑ Statement of general soils conditions.
- ❑ Type and volume of traffic. Sketch of pavement section including materials thickness and compaction.
- ❑ Fencing.
- ❑ A general statement of storm drainage.

Sanitary

- ❑ Water- General explanation of existing system, type of proposed construction, and material. Include tentative sizes and required flows for domestic and fire flow (both interior and exterior); include hydrant test data.
- ❑ Sanitary Sewer- Explanation of existing system. Describe proposed system, material, sizes and flow volumes.

<u>CIVIL</u> Quality Control Checklist
(DETAILED CHECK)

_____
(insert design organization's name)

Preliminary Submittal (65%)

Project Name: _____

Location: _____

Project Number: _____ Date:_____

Civil Engineer:_____ QC Check By:_____

Check when complete, or mark NA if not applicable. Add comments to clarify as appropriate.

Drawings

- ❑ Site Plan (1:250) showing roads, grading, parking, utilities, survey data, method of locating buildings, slopes, drainage, and limits of construction.
- ❑ Two sections through the building (perpendicular) showing excavation lines, types of backfill, and degree of compaction requirements.
- ❑ Sketch plan showing proposed locations of parking, roadways, controlled perimeter, trash containers meet the required standoff distance in accordance with the latest DOD AT/FP Standards for Buildings.
- ❑ Sketch plan showing proposed buildings and existing buildings meet the required building separation in accordance with the latest DOD AT/FP Standards for Buildings.
- ❑ AT/FP check-off list is provided.
- ❑ Typical road section and parking lot section showing excavation limits, type of backfill, and compaction requirements.
- ❑ Typical section of utility/road crossing.
- ❑ Plan and profile of sewer lines. Typical sections and manhole details.
- ❑ All other major details such as fire hydrants, thrust blocks, valve boxes, fence details, etc.

Design Analysis

- ❑ Resubmit updated design analysis incorporating corrections resulting from previous review.
- ❑ Additional information and calculations.

<u>CIVIL</u> Quality Control Checklist
(DETAILED CHECK)

_____
(insert design organization's name)

Pre-Final Submittal (90%)

Project Name: _____

Location: _____

Project Number: _____ Date:_____

Civil Engineer:_____ QC Check By:_____

Check when complete, or mark NA if not applicable. Add comments to clarify as appropriate.

- ❑ Existing and proposed grades.
- ❑ That haul routes, disposal/borrow sites, construction contractor's storage area, construction limits, and construction staging area are shown.
- ❑ Existing utilities.
- ❑ That new underground utilities have been checked for conflicts against the site plans.
- ❑ That utility tie-in locations agree with mechanical stub out plan.
- ❑ That profile sheets show underground utilities and avoid conflicts
- ❑ That project limits and limits of clearing, grading, turfing, or mulch have been shown and are consistent with architectural and/or landscaping plans.
- ❑ That fire hydrant and power/telephone pole locations correspond with electrical and architectural drawings.
- ❑ That basis of horizontal and vertical control is given and the control points are located properly with pertinent data shown: i.e., elevations, coordinates, stationing, and/or start of construction.
- ❑ That valve boxes and manholes match final finished grades or pavement, swales or sidewalks.

- ❑ That boring locations, soil classifications, water table, and depth of rock are shown on the plans.
- ❑ That rigid pavement joint plans are shown with correct spacing.
- ❑ That foundation coordinates are shown on the foundation plan and coordinated with architectural drawings.
- ❑ That finished floor elevations match on architectural and structural drawings.
- ❑ That civil specifications are coordinated with plans.
- ❑ That storm and sewage drains from the facility have adequate capacity.
- ❑ That directions to contractors are not duplicated in plan notes and in the specifications.
- ❑ Verify the building footprint is the same as the architectural plan
- ❑ Sufficient dimensions to locate the buildings and other major constructions
- ❑ Verify that the site plans show new & existing underground utilities:
    - ❑ Power
    - ❑ Telephone
    - ❑ Water
    - ❑ Water tanks
    - ❑ Sewer
    - ❑ Gas
    - ❑ Storm drainage
    - ❑ Fuel lines
    - ❑ Grease traps
    - ❑ Fuel tanks
    - ❑ Site utility demolition requirements
    - ❑ Streams
- ❑ Check Utility Plans for:
    - ❑ Utility Line Interferences
    - ❑ Connections (both to buildings and to service)
- ❑ Verify that the items listed are shown and do not interfere with new driveways, sidewalks, or other site improvements:
    - ❑ Power/Telephone poles
    - ❑ Pole guys
    - ❑ Street signs
    - ❑ Drainage inlets

- ❑ Valve boxes
- ❑ Manhole castings
- ❑ Paving
- ❑ Contaminated soils
- ❑ Recent spoils, embankments

❑ Verify that rain leaders arc connected to or drain into surface or underground site drainage (coordinate with mechanical).

❑ Verify that fire hydrants (and fire loops) are shown in their intended locations and that they are sufficiently dimensioned.

❑ Verify site lighting and street lights are shown and dimensioned (coordinate with electrical)

❑ Look for "dark" areas

❑ Valve controls

❑ Verify that profile sheets show existing and proposed underground utilities and that they avoid conflicts.

❑ Check scaled and stated dimensions on plan and profile sheets.

❑ Verify that existing and proposed grades are shown.

❑ Verify positive drainage away from the building and final drainage off the site.

❑ Verify the limits are shown for:

- ❑ Fill
- ❑ Clearing
- ❑ Grading
- ❑ Check roadway turn radii and pavement thickness, fire access, curbing, parking and sidewalk layouts.
- ❑ Check ADA parking and access requirements.

B. LANDSCAPE

Quality Control Checklist
(DETAILED CHECK)

_____
(insert design organization's name)

Project Name: _____

Location: _____

Project Number: _____ Date:_____

Civil Engineer:_____ QC Check By:_____

Check when complete, or mark NA if not applicable. Add comments to clarify as appropriate.

- ❑ That the sprinklers, lighting, landscape, etc., correspond with the site limits, including the building and civil plans.
- ❑ That maintenance of landscape has been provided for in the design documents.
- ❑ Review the landscape specifications.
- ❑ Verify locations of structures & contours with the civil drawings, architectural drawings, and other landscape plans (coordinate with civil and architectural).
- ❑ Check dimensions
- ❑ Review the planting plans; ascertain appropriateness of.
  - ❑ Size
  - ❑ Type
  - ❑ Spacing
  - ❑ Leaf dropping
- ❑ Check that views to and from the facility are not inhibited.
- ❑ Verify that the planting limits are shown for:
  - ❑ Sod
  - ❑ Seeding

- ❑ Mulch

❑ Verify that the depth and limits of topsoil are shown.

❑ Review the irrigation plans.

❑ Verify:

- ❑ Adequate coverage
- ❑ Appropriate systems
- ❑ Over spray does not hit construction

❑ Check locations of controls and valve boxes.

❑ Verify power to (coordinate with electrical):

- ❑ Irrigation controls
- ❑ Pumps
- ❑ Lighting

❑ Verify water connections to irrigation (coordinate with civil).

❑ Check that back flow preventor is shown.

❑ Verify accent lighting is shown.

❑ Verify that trees are not shown over water or sewer lines (coordinate with civil).

❑ Check the planting details.

❑ Check the site amenities layout; look for:

- ❑ Location
- ❑ Dimensions

❑ Check the site amenities details

❑ Check the irrigation details.

❑ Verify time clock location & power connections (coordinate with electrical).

❑ Verify that all site details are coordinated between the architectural and civil disciplines:

❑ Sidewalks

❑ Curbs

❑ Planter walls

- ❑ Retaining walls
- ❑ Verify tool storage location (if required).

C. ARCHITECTURAL

Quality Control Checklist
(DETAILED CHECK)

_____
(insert design organization's name)

Concept Submittal (35%)

Project Name: _____

Location: _____

Project Number: _____ Date:_____

Architect:_____ QC Check By:_____

Check when complete, or mark NA if not applicable. Add comments to clarify as appropriate.

Design Development

- ❑ Design meets customer needs as stated in planning documents and pre-design meetings.
- ❑ Design is within project scope as stated in planning documents.
- ❑ Proposed facility design is well-coordinated with existing adjacent development.
- ❑ Building and site development work in unison for efficient and safe access.
- ❑ Functional relationships are logical and efficient.
- ❑ Building location(s) meets all stand off and building separation requirements.
- ❑ All existing work and all new work is clearly identified.

Code Review

- ❑ Occupancy Group
- ❑ Construction Type
- ❑ Occupant Load
- ❑ Allowable area, building height, and number of stories

<u>ARCHITECTURAL</u> Quality Control Checklist
(DETAILED CHECK)

_____
(insert design organization's name)

Preliminary Submittal (65%)

Project Name: _____

Location: _____

Project Number: _____ Date:_____

Architect:_____ QC Check By:_____

Check when complete, or mark NA if not applicable. Add comments to clarify as appropriate.

Coordination

- ❑ Locations of columns, bearing walls, grid lines and overall building dimensions match structural drawings.
- ❑ Structural member locations are commensurate architecturally.
- ❑ Skylight structures are compatible with structural design.
- ❑ Chases match on structural, mechanical, plumbing, and electrical drawings.
- ❑ Architectural space requirements are commensurate with elevators, escalators, and other equipment.
- ❑ Building plan match lines are consistent on architectural, structural, mechanical, plumbing, and electrical drawings.
- ❑ Building elevations match floor plans.

Code Review

- ❑ Occupancy Group
- ❑ Construction Type
- ❑ Occupant Load
- ❑ Allowable area, building height, and number of stories
- ❑ Protection of exterior walls and openings
- ❑ Means of egress requirements

- ❑ Protection of vertical openings
- ❑ Occupancy and area separations

Drawing Review

Plans

- ❑ Spot check dimension strings on all plans, if problems occur, check all strings.
- ❑ Check plans to ensure that all existing work and all new work is clearly identified.

Exterior Elevations

- ❑ Check building elevations against floor plans.
- ❑ Check rooflines.
- ❑ Check dimensions on elevations against sections.
- ❑ Check window and door locations.

Sections and Details

- ❑ Check building heights from finish floor. Coordinate with structural.
- ❑ Check finish floor and coordinate finish grades with civil drawings.
- ❑ Verify similarity of wall sections against architectural building sections

Accessibility

- ❑ Check accessible paths and clearances.
- ❑ Check toilet room plans including the wheel chair turning space.

General

- ❑ Check for adequate and proper dimensioning, vertical and horizontal
- ❑ Look for omissions, duplications, and inconsistencies.
- ❑ Check for spelling and terminology errors.
- ❑ Check plots for clarity and readability.

Specifications

- ❑ Check to assure appropriate selection of specifications sections.
- ❑ Check to assure specifications sections selection is complete and covers all architectural materials, equipment, and systems shown in the design drawings.

<u>ARCHITECTURAL</u> Quality Control Checklist
(DETAILED CHECK)

_____
(insert design organization's name)

Pre-Final Submittal (90%)

Project Name: _____

Location: _____

Project Number: _____ Date:_____

Architect:_____ QC Check By:_____

Check when complete, or mark NA if not applicable. Add comments to clarify as appropriate.

Coordination

- ❑ Grading around perimeter of building matches civil drawings.
- ❑ Entries, porches, stoops, and walks match civil drawings.
- ❑ Demolition instructions are clear on what to remove and dispose of, what to remove and re-use, and what is to remain
- ❑ Elevation points match civil and structural drawings.
- ❑ Locations of columns, bearing walls, grid lines and overall building dimensions match structural drawings.
- ❑ Structural member locations are commensurate architecturally.
- ❑ Skylight structures are compatible with structural design.
- ❑ All mechanical and electrical equipment is properly supported and that all architectural features are adequately framed and connected.
- ❑ All drawings showing bridge cranes, monorails, hoists, and similar items have support details, notes, and that the locations are coordinated with the architectural, structural, mechanical, and electrical drawings. Ladders for maintenance access are provided for bridge cranes.
- ❑ Locations of expansion joints, on all floors, walls, and ceilings, match structural drawings.

- ❑ All wall construction types are identified and defined
- ❑ Fire rated walls, ceilings, doors, windows and dampers are identified
- ❑ Large-scale plans and sections match small-scale plans and sections.
- ❑ Chases match on structural, mechanical, plumbing, and electrical drawings.
- ❑ Concealed space between the ceiling and the floor or roof above is commensurate with ductwork, conduit, piping, and light fixtures.
- ❑ Equipment room or areas are commensurate with mechanical, electrical, and communications equipment.
- ❑ Architectural space requirements are commensurate with elevators, escalators, and other equipment.
- ❑ Appliances, fixtures, and equipment fit in available space.
- ❑ Building plan match lines are consistent on architectural, structural, mechanical, plumbing, and electrical drawings.
- ❑ Building elevations match floor plans.
- ❑ Building sections match elevations, plans, and structural drawings.
- ❑ Columns, beams, and slabs are identified on sections.
- ❑ Section and detail call outs are proper and cross-referenced.
- ❑ Vapor retarder has been provided as required.
- ❑ Through the wall flashing and weep holes are provided where moisture may penetrate the outer material.
- ❑ Flashing is detailed. Materials and their gauges are noted, and coordinated with the specifications.
- ❑ Miscellaneous metals are noted and coordinated with the specifications.
- ❑ Limits, types, and details of waterproofing are noted and coordinated with design documents.
- ❑ Limits, types, and details of insulation are noted and coordinated with design documents.
- ❑ Limits, types, and details of roofing are noted and coordinated with design documents.

- ❑ Roof penetrations and assemblies are located and detailed.
- ❑ Gutters and downspouts are properly detailed including expansion provisions, drained, and waterproofed
- ❑ Color finish schedules are on drawings or in specifications.
- ❑ Door and window schedule information matches plans, elevations, fire ratings, and specifications.
- ❑ Reflected architectural ceiling plans match mechanical and lighting plans.

Code Review

- ❑ Occupancy Group
- ❑ Construction Type
- ❑ Occupant Load
- ❑ Allowable area, building height, and number of stories
- ❑ Protection of exterior walls and openings
- ❑ Means of egress requirements
- ❑ Protection of vertical openings
- ❑ Occupancy and area separations
- ❑ Draft stops
- ❑ Verify locations of fire barriers and fire walls.
- ❑ Verify ratings of openings in fire barriers and fire walls.

Drawing Review

Plans

- ❑ Spot check dimension strings on all plans, if problems occur, check all strings.
- ❑ Check plans to ensure that all existing work and all new work is clearly identified.
- ❑ Check window and door opening locations.
- ❑ Check location of section and detail cuts.
- ❑ Check partial floor plans against small scale floor plans.
- ❑ Verify door opening size where large equipment and furnishings must be moved in or out.
- ❑ Verify expansion joints on plans.
- ❑ Locate and detail fire extinguishers cabinets/brackets.

- ❑ Check stair layout. Check stair length against the floor-to-floor height.
- ❑ Verify roof plan and rooftop equipment and penetration locations.
- ❑ Check roof details; ensure consistency with roofing materials, specs, and SMACNA standards.
- ❑ Check mechanical and plumbing drawings for roofing details. Coordinate with architectural drawings.

Exterior Elevations

- ❑ Check building elevations against floor plans.
- ❑ Verify expansion joints on elevations
- ❑ Check rooflines.
- ❑ Check dimensions on elevations against sections.
- ❑ Check window and door locations.
- ❑ Verify and locate all large pipes, ducts, air intake louvers, exhaust louvers, electrical cabinets, switch gears, service entrance masts, etc

Sections and Details

- ❑ Check building heights from finish floor. Coordinate with structural.
- ❑ Check finish floor and coordinate finish grades with civil drawings.
- ❑ Verify similarity of wall sections against architectural building sections
- ❑ Thoroughly check at least two wall sections on each detail sheet
- ❑ Check architectural wall sections against structural sections
- ❑ Verify that structural elements actually fit inside walls and furred-outs
- ❑ Check keyed notes.
- ❑ Check that toilet partitions are properly connected, especially vertically hung to structure above.
- ❑ Verify blocking in walls for equipment.
- ❑ Check handrail design and height.
- ❑ Check guardrail design and height.
- ❑ Check stairwell and elevator enclosures.
- ❑ Check equipment support details between architectural, structural, and mechanical plans.

Reflected Ceiling Plans

- ❑ Verify reflected ceiling plans against architectural floor plans to ensure no variance with walls.
- ❑ Check light fixture locations against lighting plans.
- ❑ Check locations of diffusers/registers against mechanical plans.
- ❑ Soffit locations
- ❑ Check against smoke alarm and other ceiling mounted items
- ❑ Check if ceiling is fire rated construction and verify details of openings to avoid compromising fire rated construction.
- ❑ Check specifications for ceiling materials and construction.

Interior Elevations and Finish Schedules

- ❑ Verify building signage:
  - ❑ Type
  - ❑ Text
  - ❑ Directory
  - ❑ Exterior signage
  - ❑ Quantity
- ❑ Verify finish schedule information including:
  - ❑ Room numbers
  - ❑ Room names
  - ❑ Finishes
  - ❑ Ceiling heights

Doors, Windows, Louvers

- ❑ Verify all door schedule information including:
  - ❑ Sizes
  - ❑ Types
  - ❑ Ratings
  - ❑ Hardware
- ❑ Check hardware schedule including hardware sets, finishes, and ratings
- ❑ Verify blocking is called out, especially at doorstops

- ❑ Check louver schedule. Coordinate with mechanical.

Accessibility

- ❑ Check accessible paths and clearances.
- ❑ Check clearances at doors.
- ❑ Check toilet room plans including the wheel chair turning space.
- ❑ Grab bars and other equipment are shown.
- ❑ Check drinking fountains for accessibility and location (coordinate location with mechanical).

General

- ❑ Check for adequate and proper dimensioning, vertical and horizontal
- ❑ Look for omissions, duplications, and inconsistencies.
- ❑ Coordinate Index Sheet with drawings.
- ❑ Check title blocks for:
  - ❑ Drawing Number
  - ❑ Invitation Number
  - ❑ Sheet Number
  - ❑ Project title
- ❑ Check for spelling and terminology errors.
- ❑ Check plots for clarity and readability.

Specifications

- ❑ Coordinate Sections 05500, 06100, 07600, 13080, 14240 with structural, mechanical, electrical sections.
- ❑ Verify materials and grades in Sections 06100, 06200.
- ❑ Coordinate Division 7 specifications sections with drawings.
- ❑ Verify Schedule in Section 08710 with Door Schedule.
- ❑ Verify that all glazing types are included in Section 08810.
- ❑ Coordinate all Division 9 specifications sections with Finish Schedule.
- ❑ Verify the Painting Schedule in Section 09900 is complete.
- ❑ Coordinate the Schedules in 10440 & 10800 with drawings.
- ❑ Spell check all sections.

- ❑ Verify all:
  - ❑ Brackets
  - ❑ References
  - ❑ Section References
- ❑ Check all Table of Contents, both Project and Section, for errors, sequences, etc.

D. STRUCTURAL

Quality Control Checklist
(DETAILED CHECK)

_____
(insert design organization's name)

Concept Submittal (35%)

Project Name: _____

Location: _____

Project Number: _____ Date:_____

Structural Engineer:_____ QC Check By:_____

Check when complete, or mark NA if not applicable. Add comments to clarify as appropriate.

- ❑ Correct names, dates, project number, spelling, etc.
- ❑ Format meets customer requirements
- ❑ Scope verified against 1391
- ❑ Overall building dimensions, type of frame, roof and floor systems.
- ❑ General description of description of the lateral load resisting system.
- ❑ List of all design loads and assumptions. (Seismic-SEAOC; Snow & Wind-ASCE 7)
- ❑ List of criteria. (AFM, TM, UBC, AISI, AISC, ACI, SJI, SDI, AWS etc.)
- ❑ Provide spec with both US & JIS references
- ❑ Name of computer programs used for analysis.

List of Outline Specifications:
- ❑ CEGS 03200 Concrete Reinforcement
- ❑ CEGS 03250 Expansion Joints, Contraction Joints, and Waterstops
- ❑ CEGS 03300 Concrete for Building Construction
- ❑ CEGS 03301 Concrete for Building Construction
- ❑ CEGS 03414 Precast Roof Decking
- ❑ CEGS 04200 Masonry
- ❑ CEGS 05055 Welding, Structural

- ❑ CEGS 05120 Structural Steel
- ❑ CEGS 05210 Steel Joists
- ❑ CEGS 05300 Steel Decking
- ❑ CEGS 05500 Miscellaneous Metal
- ❑ CEGS 07413 Metal Siding
- ❑ CEGS 13080 Seismic Protection for Mechanical, Electrical Equipment
- ❑ CEGS 13120 Standard Metal Building Systems
- ❑ CEGS 13121 Special Purpose Metal Building Systems
- ❑ CEGS 13210 Elevated Steel Water Tank

Drawing submittal:

- ❑ General design and special notes.
- ❑ Floor plan, column spacing, beams location, thickness of floor slab, and location of floor drain.
- ❑ Roof plan, spacing of joists, girders, trusses and roof decks.
- ❑ Wall section through roof, floor, and foundation indicating materials and type of construction proposed.
- ❑ Design calculations of wind load-both positive and negative wind pressures on frame, wind on walls, wind on roof, wind on wall corners, wind on roof ridges, wind on eaves, and wind on roof corners.
- ❑ Design calculation of live load-Roof snow, snowdrift and floor loads.
- ❑ Design calculation of seismic load-base shear, lateral load resisting system and contrast them with the comparable wind loads.
- ❑ Design calculations for roof and floor decks, beams, joists, girders, and columns as applicable.
- ❑ Design calculation for horizontal diaphragms and bracing to include shear transfer connections.
- ❑ Design calculations for shear walls, and exterior cladding for flexure, shear, and overturning as appropriate.
- ❑ Traffic, and unusual roof and floor dead loads.

Comments:

<u>STRUCTURAL</u> Quality Control Checklist
(DETAILED CHECK)

_____
(insert design organization's name)

Preliminary Submittal (65%)

Project Name: _____

Location: _____

Project Number: _____ Date:_____

Structural Engineer:_____ QC Check By:_____

Check when complete, or mark NA if not applicable. Add comments to clarify as appropriate.

- ❑ That the design load conditions meet or exceed the Building codes and the Design Standards.
- ❑ That the column orientation and grid lines on the structural and the architectural drawings match.
- ❑ That the load-bearing walls and the column locations match with architectural drawings.
- ❑ That the slab elevations match the architectural drawings.
- ❑ That the depressed or raised slabs are indicated and match the architectural drawings.
- ❑ That the limits of slabs on the structural drawings match the architectural drawings.
- ❑ That the expansion joints through the structural drawings match the architectural drawings.
- ❑ The footing depths and coverage with the existing and final grades.
- ❑ That the foundation piers, footings, grade beams are coordinated with schedules.
- ❑ The footing and pier locations with the new and existing utilities, trenches and tanks.
- ❑ That the foundation walls elevations are the same as on the architectural drawings.
- ❑ That the location of floor and roof framing column lines and column orientation match the foundation plan column lines and column orientation.
- ❑ That the structural perimeter floor and roof lines match the architectural drawings.
- ❑ That the section and detail call outs are proper and cross-referenced.

- ❑ That the columns, beams, and slabs are listed in schedules and are coordinated.
- ❑ That the column length, beam, and joist depths match with the architectural drawings.
- ❑ That the structural dimensions match the architectural drawings.
- ❑ That the drawing notes do not conflict with specifications.
- ❑ That the architectural construction and rustication joints are correct.
- ❑ The structural openings with the architectural, mechanical, electrical, and plumbing drawings.
- ❑ The structural joist and beam location with water closets, floor urinals, floor drains and chases.
- ❑ The structural design roof and floors for the superimposed loads, including the HVAC equipment, boilers, glass walls, etc.
- ❑ Cambers, drifts, and deflections with the architectural drawings.
- ❑ That the concentrated load points on joists do not conflict with design by other disciplines; i.e., large water lines or fire main lines.
- ❑ That horizontal and vertical bracing, ladders, stairs and framing do not interfere with doorways, piping, duct work, electrical, equipment, etc.
- ❑ That the structural fire proofing requirements are coordinated with the architectural requirements.
- ❑ Review structural specifications sections.
- ❑ Verify test piles located on drawings, and that pile driving requirements are in the notes.
- ❑ Verify column lines and column locations, and load bearing walls between structural and architectural (overlay the plans).
- ❑ Verify perimeter slab on structural matches the architectural plan.
- ❑ Verify finish floor elevations (coordinate with architectural and civil).
- ❑ Verify that all depressed or raised slab areas are shown the same as the architectural plans.
- ❑ Verify finish floor elevations are consistent with architectural.
- ❑ Verify control and expansion joints are called out, dimensioned, and detailed.
- ❑ Verify expansion joint locations against architectural.

- ❑ Verify seismic and building expansion joints are shown on architectural and extend through walls, ceilings, floors, roofs (as required).
- ❑ Verify foundation piers and footings are identified.
- ❑ Verify footing elevations.
- ❑ Verify beams are identified.
- ❑ Spot check typical and extreme beam and joist-span, depth, and spacing.
- ❑ Verify roof framing plan column lines and columns against foundation plan column lines and columns.
- ❑ Verify major column and beam lengths are listed in schedules (if applicable).
- ❑ Spot check to verify structural sections are indicated in the proper place on the plans.
- ❑ Spot check typical details and unique details (especially connections).
- ❑ Cross check several of the sections against the architectural sections.
- ❑ Verify dimensions by adding dimension strings
- ❑ Check dimensions against architectural.
- ❑ Read the general notes. Check that they coincide with the architectural notes and that materials are the same as in the architectural.
- ❑ Check that structural supports are provided for folding walls, ceilings, toilet partitions, and mechanical equipment (coordinate with architectural).
- ❑ Verify the foundation systems with soils report requirements and grading plans. Check the footings for appropriate bottom elevations, and piling locations for required capacity, cut off and tip elevations. Check rebars sizes. Verify that steel placement, anchor bolts, inserts, and anchor plates are located and dimensioned. Verify that there is sufficient clearance to install them and that proper coverage is allowed for. Check bond beams, tie beam, etc, for rebars and location. Relate them to the architectural drawings.
- ❑ Verify equipment support requirements, catwalks, railing and other inserts requiring incorporation to structural members.
- ❑ Verify mechanical openings and penetrations.
- ❑ Check slab thickness and selection for practical loading, expansion control, pouring sequence, seismic separation for completeness, detailing and/or specification inclusion.
- ❑ Verify that there are a minimum of different concrete mix strengths.

- ❑ Check that structural members are selected for imposed loads and industry standards. Avoid special conditions or shapes.

- ❑ Check that specification section 01452, Special Inspection for Seismic-Resisting Systems is included in the body of specifications.

- ❑ Check, if required, that structural components including walls, columns, beams, frames, floors, roofs, etc. are designed in accordance with the latest DOD AT/FP Standards for Buildings for blast analysis.

- ❑ Verify system selection is cost effective and within the capabilities of available labor force and geographic region.

Comments:

<u>STRUCTURAL</u> Quality Control Checklist
(DETAILED CHECK)

_____
(insert design organization's name)

Pre-Final Submittal (90%)

Project Name: _____

Location: _____

Project Number: _____ Date:_____

Structural Engineer:_____ QC Check By:_____

Check when complete, or mark NA if not applicable. Add comments to clarify as appropriate.

- ❑ Correct names, dates, project number, spelling, etc.
- ❑ Overall building dimensions, type of frame, roof and floor systems.
- ❑ Floor plan showing complete dimensions, grid lines of column, beams and designations.
- ❑ Layouts of expansion, construction or control joints and floor drains showing dimension and steel reinforcements.
- ❑ Floor slabs and floor drain showing dimensions, steel reinforcements and special surface treatment required and crossed references to proper specification sections.
- ❑ Framing section showing all required members and vertical dimensions; any additional reinforcement on large openings. Intermediate floor framing plans and stair details on multiple story structures if applicable.
- ❑ Wall section through foundations, floors, and roof framing, showing dimensions and thickness of stem wall, footings, slab, and vertical members.
- ❑ Roof plan showing dimensions and designations of joists; girders; trusses; reinforcements and thickness of roof decks.
- ❑ Final design calculations of wind load-both positive and negative wind pressures on frame, wind on walls, wind on roof, wind on wall corners, wind on roof ridges, wind on eaves, and wind on roof corners.
- ❑ Final design calculation of live load-Roof snow, snowdrift and floor loads.

- ❑ Final design calculation of seismic load-base shear, lateral load resisting system and contrast them with the comparable wind loads.
- ❑ Final design calculations for roof and floor decks, beams, joists, girders, and columns as applicable.
- ❑ Final design calculation for horizontal diaphragms and bracing to include shear transfer connections.
- ❑ Stress and deflection calculations on selected structural members.
- ❑ Final design calculations for shear walls, and exterior cladding for flexure, shear, and overturning as appropriate.
- ❑ Traffic, and unusual roof and floor dead loads.
- ❑ Complete Guide Specifications.
- ❑ Annotated review comments from 35% submittal.
- ❑ Sections and details on footing and member sizes of anchor bolts, bearing plate and rebars, etc.
- ❑ Sections and details on connection joints, bracing, etc.
- ❑ Details on crack control joints, construction joints, additional reinforcement on large opening, header beams, or any special items.
- ❑ Framing member, column, beams or truss schedules.
- ❑ Column connection details.
- ❑ Foundations schedule
- ❑ Coordinate drawings with other disciplines and with specifications.
- ❑ Final Stress (moment and shear) Calculations.
- ❑ Final Member Deflections
- ❑ Final Member Sizes
- ❑ Final Connection Calculations
- ❑ Final foundation stability and overturning moment calculations.

- ❑ List of drawings
- ❑ Complete title blocks with invitation numbers.

Comments:

E. MECHANICAL

Quality Control Checklist
(DETAILED CHECK)

_____
(insert design organization's name)

Concept Submittal (35%)

Project Name: _____

Location: _____

Project Number: _____ Date:_____

Mechanical Engineer:_____ QC Check By:_____

Check when complete, or mark NA if not applicable. Add comments to clarify as appropriate.

- ❑ Correct names, dates, project number, spelling, etc.
- ❑ Provide a general description of the project scope.
- ❑ Scope verified against RFP.
- ❑ Provide a description of all the major mechanical systems required in the project.
- ❑ List criteria, codes, manuals and directives pertinent to the project design.
- ❑ List design conditions, temperatures, "U" factors.
- ❑ Mechanical requirements for special equipment; i.e., kitchen, elevator, telephone, transformers, etc.
- ❑ List of specifications anticipated.
- ❑ Always show the North arrow on each plan
- ❑ Ensure the drawings are organized and that the plumbing and mechanical drawings are separated. Plumbing drawings shall be labeled P-XXX and mechanical drawings shall be labeled M-XXX
- ❑ Do not insert the exterior water distribution piping into the plumbing drawings. The exterior water distribution system are civil and should be inserted in the civil section.

- ❑ First run calculations – heat loss, ventilation loads, cooling loads, plumbing loads, etc.
- ❑ 35% drawings consist of: proposed layout of mechanical equipment and distribution systems – HVAC, plumbing fixtures, etc.
- ❑ Verify all mechanical systems are described in detail.
- ❑ Verify all criteria is listed and correct.
- ❑ Verify code and manual listings are correct.
- ❑ Preliminary load calculations provided: heat loss, ventilation loads, domestic cold and hot water requirements, fire water requirements, other system requirements.
- ❑ Plumbing layout coordinated with architectural layout.
- ❑ Verify outside utilities layout is coordinated with civil.
- ❑ Mechanical room layout coordinated with architectural drawings.
- ❑ Mechanical equipment locations coordinated with other disciplines.
- ❑ Mechanical electrical loads coordinated with electrical.
- ❑ That equipment schedules correspond to manufacturer's specifications and design documents.
- ❑ Verify all rooms are served by HVAC system as required.
- ❑ Verify toilet rooms have exhaust.
- ❑ Water closets are oriented on the north-south axis

Comments:

<u>MECHANICAL</u> Quality Control Checklist
(DETAILED CHECK)

_____
(insert design organization's name)

Pre-Final Submittal (90%)

Project Name: _____

Location: _____

Project Number: _____ Date:_____

Mechanical Engineer:_____ QC Check By:_____

Check when complete, or mark NA if not applicable. Add comments to clarify as appropriate.

- ❑ Design analysis complete (life cycle cost analysis included where required).
- ❑ Plumbing load calculations – hot cold water, waste water, fixture count.
- ❑ Heat Loss calculations – Conductive heat loss, infiltration, special systems losses.
- ❑ Ventilation calculations – Supply, return and exhaust air systems, special systems.
- ❑ Energy budget calculations if required by project – building losses, process loads.
- ❑ Air conditioning load calculations – cooling loads.
- ❑ POL calculations – tank sizes/pipeline sizes/pumphouses
- ❑ Fire protection calculations – water requirements, fire pumphouses, water supplies
- ❑ Utility calculations – natural gas, steam, condensate
- ❑ Calculations for other miscellaneous systems – compressed air, lube oil systems, special systems
- ❑ Other mechanical system and specialties
- ❑ Catalog cuts of equipment selected based on calculations
- ❑ Annotated comments from 35% submittal

GENERAL

- ❑ Delete notes that are shown but are not applicable to discipline scope of work. Check standard notes for clarity.
- ❑ Criteria list is complete and accurate.
- ❑ All layout plans complete with references and notes.
- ❑ All referenced details and sections are complete.
- ❑ All mechanical specifications are complete and coordinated with other disciplines. All non-applicable sections and references are deleted.
- ❑ Verify all details and section bubbles are complete and accurate.
- ❑ Verify the drawing set is complete and in order.
- ❑ All title blocks are complete and ready for signature.

HVAC and PLUMBING

- ❑ That mechanical openings match architectural and structural drawings.
- ❑ Verify utility system pressures are adequate.
- ❑ Coordinate system layouts with structures, architectural, electrical and civil to ensure mechanical equipment and distribution systems will fit within the allotted ceiling and structural spaces.
- ❑ Coordinate mechanical and electrical loads required for mechanical equipment.
- ❑ All equipment sizing plus distribution sizing of pipes and ducts.
- ❑ All equipment are properly sized and labeled.
- ❑ Mechanical room section and details are complete and cross referenced.
- ❑ All utility systems are complete – sections and details.
- ❑ Equipment schedule is complete and coordinated with mechanical and electrical plans. Motor sizes match electrical plans.
- ❑ Verify all mechanical distribution systems piping and ductwork are sized and labeled.

- ❑ Verify mechanical equipment locations are coordinated with architectural and electrical drawings.
- ❑ Typical seismic bracing for mechanical equipment.
- ❑ Typical seismic bracing for piping systems.
- ❑ That all structural supports required for mechanical equipment are indicated on drawings.
- ❑ Verify that roof penetrations (ducts, fans, vents, etc.) are indicated on architectural roof plans and structural plans.
- ❑ Verify that all penetrations are detailed for water tightness. (This is better shown on the architectural drawings.)
- ❑ Verify sizing and connections

HVAC

- ❑ Verify exterior building penetrations for ventilation system are addressed and coordinated with architectural.
- ❑ All ductwork is shown and sized.
- ❑ Verify all duct registers and grilles have been coordinated with the architectural reflected ceiling plan and the electrical lighting layout.
- ❑ Be sure vertical HVAC shafts are adequate for largest duct and are fire protected between floors.
- ❑ Verify that fire dampers are shown in ductwork layout.
- ❑ Verify controls have been coordinated with electrical.
- ❑ Check zones for logical control
- ❑ Check locations of thermostats
- ❑ Check for vibration isolation
- ❑ Verify all mechanical equipment has adequate maintenance space for removal of coils, filters, and tube bundles.

PLUMBING

- ❑ Verify all plumbing schedules are complete and match specification for type fixtures used.
- ❑ Verify all roof drains and mechanical wall/roof penetrations are coordinated with structural and architectural drawings.
- ❑ Verify all outside utilities are coordinated with civil layout.
- ❑ That floor openings, i.e., drains, water closets, etc., do not conflict with structural beams, joists, or trusses.
- ❑ Verify plumbing fixtures are coordinated with architectural.
- ❑ That roof drain details are coordinated with other trades to show the installation of sump pans in ribbed sheet metal decks, and the placement of roof insulation in and around the drainage fitting.
- ❑ Verify all fixtures are connected to water and sewer.
- ❑ Verify that each fixture drain is provided with a vent
- ❑ Verify that the floor slope is coordinated with architect to drain to floor drains
- ❑ Verify that floor drains are provided for electric hot water heaters
- ❑ Verify plumbing plans against architectural plans; include casework (verify fixtures will fit in casework).
- ❑ Check rain leader system against architectural roof plan and civil plan.
- ❑ Verify wall chases are provided on architectural to conceal vertical piping. Verify adequate wall thickness.
- ❑ Verify that EWC's water fountains have water, drain connections (repeated in architectural).

POL

- ❑ All POL systems are complete – tank sizing and piping, details/sections.
- ❑ All POL details are complete and cross referenced.

Comments:

F. FIRE PROTECTION

Quality Control Checklist
(DETAILED CHECK)

_____
(insert design organization's name)

Fire Protection General Checklist for Design and Review

Project Name: _____

Location: _____

Project Number: _____ Date:_____

Mechanical Engineer:_____ QC Check By:_____

Check when complete, or mark NA if not applicable. Add comments to clarify as appropriate.

- ❑ Provide detailed hydraulic calculations that verifies that the water supply is sufficient to meet the fire protection system demand.
- ❑ Ensure that a complete riser diagram is shown.
- ❑ Ensure that all piping from the point of connection to the existing, to the top of sprinkler riser(s) is shown on the drawings.
- ❑ Ensure that all valves, fire department connections, and inspector's test connections indicated on drawings.
- ❑ Ensure that sprinkler main drain piping and discharge point are shown and detailed. Main drains should discharge directly to the outside.
- ❑ Ensure that the extent or limit of each type of sprinkler system, each design density, each type and temperature rating of sprinkler heads, and location of concealed piping is clearly specified or shown.
- ❑ Ensure that water-filled sprinkler piping is not subject to freezing.
- ❑ Provide detail of the sprinkler piping entry into the building, and include details of anchoring and restraints.

- ❑ Ensure that aesthetics considerations are incorporated in the design of the sprinkler system, e.g. sprinkler piping is concealed in finished areas and recessed chrome-plated pendent sprinkler heads are used in finished area.

- ❑ Ensure that paddle-type water flow switches are only used in wet-pipe sprinkler systems. The other sprinkler systems shall use pressure-type flow switches.

- ❑ Ensure that the main sprinkler control valves are accessible from the outside.

- ❑ Ensure that fire rating of fire-rated walls, partitions, floors, shafts, and doors are indicated.

- ❑ Ensure that the location of required fire dampers are shown.

- ❑ Ensure that the location of all fire alarm indicating devices, pull stations, waterflow switches, detectors and other fire alarm and supervisory devices are indicated on the drawings.

- ❑ Ensure that the connection of the fire alarm and detection system to the base-wide fire alarm system is clearly shown and detailed.

Comments:

G. ELECTRICAL

Quality Control Checklist
(DETAILED CHECK)

_____
(insert design organization's name)

Concept Submittal (35%):

Project Name: _____

Location: _____

Project Number: _____ Date:_____

Electrical Engineer:_____ QC Check By:_____

Check when complete, or mark NA if not applicable. Add comments to clarify as appropriate.

General

- ❑ Verify electrical documents are coordinated with similar activities in other disciplines.
- ❑ Verify symbol legend is shown. Check legend with plan symbols for consistency.
- ❑ Verify drawings are legible at half-size.

Site

- ❑ Verify all existing above grade circuits in the proposed area of construction are shown. Check pole height, class, and location, conductor/cable voltage, quantity, size, and type, and location of guys, transformers, pole top switches, risers, light fixtures, and other pole mounted equipment.
- ❑ Verify all existing underground circuits in the proposed area of construction are shown. Check conductor/cable voltage, quantity, size, and type, conduit size and type, manhole/ handhole location, transformer location, voltage, size and type, pedestal location, lighting location, and other devices associated with the underground system.
- ❑ Verify all proposed electrical power services and changes to existing electrical utilities are shown. Check poles, transformers, switches, pedestals, ducts, conduits, manholes/handholes, above and below grade circuits, and other service related equipment,

complete with type, size and ratings, with the exception that manhole/handholes need not be sized.

- ❑ Verify all proposed area/street lighting structures are shown. Check approximate location, pole type and height, luminaire style, lamp type and wattage.

- ❑ Verify locations and descriptions of all other proposed exterior devices are shown, such as remote telephone, television, headbolt heater posts, fire alarm, emergency shut-off, lift station, pump, and dispenser device.

Lighting

- ❑ Verify all interior lighting luminaires and wall switch / occupancy sensor locations are shown. Check that each luminaire type keys to the luminaire schedule.

- ❑ Verify luminaire schedule is shown.

Power

- ❑ Verify all existing and proposed power distribution equipment locations and ratings in the area of construction are shown. Check main and sub-power panels, transformers, transfer switches, generators, and other devices that constitute the electrical distribution system.

- ❑ Verify all proposed general purpose receptacles and special electrical power outlets are shown. Check outlet locations and ratings.

- ❑ Verify proposed power one-line/riser diagram, from point of connection to existing system to sub-feeder panels. Check equipment and circuit sizes from connection point to existing system to, and including, the main distribution panel.

Communications

- ❑ Verify all existing and proposed telephone backboard/cabinet and outlet locations in the area of construction are shown.

- ❑ Verify all proposed television outlets, distribution panels, and headend equipment locations are shown.

- ❑ Verify all proposed public address outlets, distribution panels, and headend equipment locations are shown.

- ❑ Verify proposed main telephone backboard/cabinet elevations are shown, including entrance terminal, cable terminal blocks, general purpose receptacle, grounding, and other equipment or reserved spaces.

- ❑ Verify fire alarm panel, remote graphic annunciator panel, fire alarm transmitter, thermal and products of combustion detectors, pull stations, horns and strobes, and other control devices are shown. Check locations with Fire Department and Code requirements.

- ❑ Verify telephone one-line/riser diagram is shown, from point of connection to new backboard/cabinets. Check cable and duct information.

- ❑ Verify television one-line/riser diagram is shown, from connection point to new distribution panels.

- ❑ Verify public address one-line diagram is shown. Check if multiple channels/systems meet the needs of the user.

Design Analysis Narrative

- ❑ Verify the statement of summarized electrical project scope is accurate.

- ❑ Verify a written confirmation that the design conforms to the project scope is included.

- ❑ Verify a description of power supply at point of delivery is included. Check for statement of adequacy and proposed measures if existing supply is inadequate.

- ❑ Verify characteristics of the primary extension are included.

- ❑ Verify electrical characteristics (phase, voltage, number and size of wires) are indicated, with justification for the type of proposed system.

- ❑ Verify panelboard types, protective devices, loading of circuits, voltage drop of service and feeders and circuits are described. Confirm 25 percent spare capacity is indicated for each panelboard.

- ❑ Verify lighting system and power requirements are described.

- ❑ Verify communication systems, including but not limited to data, telephone, television, public address, and clock, are described.

- ❑ Verify safety systems, including but not limited to fire alarm and cardkey access, are described.

- ❑ Verify additional project criteria are listed as applicable.

- ❑ Verify intensity and type of proposed exterior lighting is indicated.

Calculations

- ❑ Verify estimate of total connected load and resulting demand is included.

Specifications

- ❑ Verify a list of guide specs is provided. Check outline of specifications proposed for which guide specs are not available suits the project parameters.

<u>ELECTRICAL</u> Quality Control Checklist
(DETAILED CHECK)

_____
(insert design organization's name)

Preliminary Submittal (65%):

Project Name: _____

Location: _____

Project Number: _____ Date:_____

Electrical Engineer:_____ QC Check By:_____

Check when complete, or mark NA if not applicable. Add comments to clarify as appropriate.

- ❑ **General**
- ❑ Verify electrical documents are coordinated with similar activities in other disciplines.
- ❑ Verify all remarks from the 30 percent design phase have been addressed.
- ❑ Verify names, dates, project number, spelling, etc. are correct.

Site

- ❑ Verify exterior electrical details are shown.
- ❑ Verify area/street lighting point-by-point lighting level, pole sizing, and branch circuit voltage drop calculations are accurate.

Lighting

- ❑ Verify lighting plans show switch legs and that branch circuiting is in progress.

Power

- ❑ Verify Power plans show branch circuiting in progress.
- ❑ Verify sizes of major equipment.

- ❑ Verify panel schedules are in progress.

- ❑ Verify proposed power one-line/riser diagram is shown, from point of connection to existing system to sub-feeder panels. Check equipment and circuit sizes from connection point to existing system to, and including, the main distribution panel.

Communications

- ❑ Verify communication and safety plans are shown and accurately reflect the project scope.

- ❑ Verify one line diagrams are shown.

- ❑ Verify fire alarm sequence of operation is delineated.

Design Analysis Narrative

- ❑ Verify the updated design analysis is submitted, incorporating corrections resulting from the previous review.

Calculations

- ❑ Verify any additional information affecting calculations and criteria is submitted.

Specifications

- ❑ Verify mark-ups of each section of the specifications used is submitted.

- ❑ Verify specifications developed for equipment which has no guide specs.

:

<u>ELECTRICAL</u> Quality Control Checklist
(DETAILED CHECK)

_____
(insert design organization's name)

Pre-Final Submittal (90%):

Project Name: _____

Location: _____

Project Number: _____ Date:_____

Electrical Engineer:_____ QC Check By:_____

Check when complete, or mark NA if not applicable. Add comments to clarify as appropriate.

General

- ❑ Verify electrical documents are complete.
- ❑ Verify electrical documents are coordinated with similar activities in other disciplines.
- ❑ Verify all remarks from the previous design phase have been addressed.
- ❑ Verify names, dates, project number, spelling, etc. are correct.
- ❑ Verify electrical plans match architectural, mechanical, plumbing and structural.
- ❑ Verify conduit chase locations match with architectural and structural drawings.
- ❑ Verify compatibility of conduit and light fixtures with architectural space and that no conflicts exist with duct, piping, or structure.
- ❑ Verify electrical equipment structural requirements are met.
- ❑ Verify electrical equipment room fits architectural space, with clearance for safety and maintenance.
- ❑ Verify the standard notes on the drawings are consistent with the project scope.
- ❑ Verify keyed notes are properly numbered and that they are consistent with the project scope.

- ❑ Verify the design analysis is resubmitted with any and all corrections from the previous review included.

- ❑ Verify annotated comments from previous review are submitted.

Site

- ❑ Verify incoming electrical service clearly delineates responsibility for installation.

- ❑ Verify the notes for utility company installations are coordinated.

- ❑ Verify proper site installation details are shown.

- ❑ Verify the exterior service transformer has an additional grounding connection at the transformer.

- ❑ Verify exterior lighting and controls are accurate and consistent with the project scope.

- ❑ Verify sufficient security lighting is provided for walks, parking, and buildings.

Lighting

- ❑ Verify luminaires in the fixture schedule correspond to the design analysis and, if used, to current manufacturer's model numbers.

- ❑ Verify light fixture spacing and locations eliminate dark spots and meet illumination requirements.

- ❑ Verify lighting levels and luminaire types are consistent with room functions.

- ❑ Verify lighting plans are coordinated with architectural reflected ceiling plans, mechanical diffuser locations, and duct clearances above fixtures.

- ❑ Verify all rooms and spaces have lighting.

- ❑ Verify exit and egress lighting is consistent with military standards, codes and regulations.

- ❑ Verify circuit numbers on the plans are crosschecked with panel schedule circuit numbering and load descriptions.

Power

- ❑ Verify electrical connections are shown for equipment, i.e., mechanical motors, heat strips, etc., architectural, overhead doors, stoves, dishwashers, etc.

- ❑ Verify electrical horsepower, voltage, phasing for all motors match on mechanical

and architectural designs.

- ❑ Verify the location of duplex outlets, telephone and data outlets, fire alarm devices, clock outlets, etc., have been coordinated with architectural millwork and finishes.
- ❑ Verify the limits and confines where conduits may be run have been established.
- ❑ Verify seismic bracing details are provided and that seismic flexible coupling locations are shown or specified.
- ❑ Verify interior transformers are grounded to building steel and the bonding to neutral is consistent, either at the transformer, at the disconnect switch, or at the panelboard.
- ❑ Verify proper service and equipment ground sizing is shown.
- ❑ Verify main electrical switchgear shows proper physical and electrical sizing.
- ❑ Verify the proper ampacity of service equipment.
- ❑ Verify proper clearances for switchgear, panelboards, and transformers.
- ❑ Verify proper requirements for ground fault protection.
- ❑ Verify code required protection on primary and secondary side of transformers.
- ❑ Verify service and branch panel conductor ampacities for correctness.
- ❑ Verify main service conductor ampacity and associated conduits for correctness.
- ❑ Verify all branch panel feeder conductor ampacities in accordance with load calculations and breaker protection.
- ❑ Verify branch panelboards show the correct voltage, ampacity, circuit breaker sizes, and load designations.
- ❑ Verify location of panels on architectural or electrical drawings; verify sufficient clearance.
- ❑ Verify calculated ampacity loads are consistent with panel size, main breaker, etc.
- ❑ Verify panel mounting in or on walls (surface or recessed) is consistent between the floor plans and schedules. Verify the integrity of fire-rated walls is maintained for recessed panels.
- ❑ Verify 25 percent spares and spaces in switchgear and panelboards for future expansion.

- ❑ Verify power connections and connector types match the utilization equipment that they serve.

- ❑ Verify responsibility for starters/disconnects and variable frequency drives for mechanical equipment is properly coordinated.

- ❑ Verify proper coordination of required power connections to mechanical equipment with mechanical drawings, including mechanical control systems.

- ❑ Verify additional power connections required by other trades-kitchen equipment-architectural type devices (screens, power doors, power hoist elevators, etc) are shown.

- ❑ Verify circuit numbers on the plans are crosschecked with panel schedule circuit numbering and load descriptions.

Communications

- ❑ Verify location of speakers match the reflected ceiling plans.

- ❑ Verify speakers, clocks, etc., schedules correspond to a manufacturer's description and design documents.

- ❑ Verify site electrical and telephone service requirements have been coordinated with supply utility requirements.

Calculations

- ❑ Verify load calculations are accurate.

- ❑ Verify fault current requirements are accurate.

- ❑ Verify primary and secondary voltage drop calculations are included.

Specifications

- ❑ Verify manufactured equipment series and model numbers, if used, are current.

- ❑ Verify specifications are complete.

- ❑ Verify all specialty systems specifications are complete.

- ❑ Verify general coordination is complete with other disciplines, esp. mechanical controls.

- ❑ Verify applicable specification sections; remove non-applicable sections or references.

- ❑ Verify specifications are proofread for spelling and typing errors, incomplete sentences, and punctuation errors.
- ❑ Verify each specification section is edited to delete materials or methods not required in the project.
- ❑ Verify all referenced publications in the publication reference are listed at the front of each section.
- ❑ Verify all materials and/or methods required for completion of the project are covered in the specifications.
- ❑ Verify the bid schedule agrees with the requirements of the scope of work.
- ❑ Verify drawings reflect the latest additives.

H. SPECIFICATIONS

Quality Control Checklist
(DETAILED CHECK)

_____
(insert design organization's name)

Project Name: _____

Location: _____

Project Number: _____ Date:_____

Architect/Engineer:_____ QC Check By:_____

Check when complete, or mark NA if not applicable. Add comments to clarify as appropriate.

- ❑ That construction phasing is clear.
- ❑ That cross-referenced specifications and drawings are numbered correctly.
- ❑ That thickness and quantities of materials shown on plans agree with specifications.
- ❑ That all items of material or equipment are covered by adequate specifications, including those not covered by CEGS.
- ❑ That all shop drawings and material certifications to be submitted are listed in the submittal register.
- ❑ That asbestos abatement and quantities are included in specs and on bid schedule.
- ❑ That Government-Furnished Materials (GFM) are identified.
- ❑ That references to test methods, material specs, or other manuals are consistent with civil or Military designations, as applicable.
- ❑ That temporary dust control measures are outlined.
- ❑ Make an overview of the specifications.
- ❑ All sections included and in proper sequence.
- ❑ Check specs for bid items (or alternates).

- ❑ Check that description is adequate, consistent, and payment method is specified Are they coordinated with and shown on the drawings?
- ❑ Check specs for phasing of construction-Are the phases clear and consistent with the drawings.
- ❑ Check drawings to ensure specification coverage on such items as the following.
- ❑ Fencing, including gates, swing type or slide, manually or electrically operated.
- ❑ Stock piling of usable earth or recyclable paving materials, topsoil disposition and clean up.
- ❑ Site access, haul roads and possible restricted work periods, contractors lay-down areas etc.
- ❑ Remove non-applicable or duplicated references, material listings, sub-paragraphs, etc.
- ❑ Check for disposition of "Salvage", "Relocate", "Contractor Set", "Owner Furnished".
- ❑ Verify that earthwork materials and execution requirements agree with criteria, soils report requirements and grading plans.

I. COST ESTIMATING

Quality Control Checklist
(DETAILED CHECK)

_____
(insert design organization's name)

Project Name: _____

Location: _____

Design Submittal: (Identify 35%, 90%, etc.)

Project Number: _____ Date:_____

Architect/Engineer: _____ QC Check By: _____

Check when complete, or mark NA if not applicable. Add comments to clarify as appropriate.

- ❑ Estimates are based on current scope of work in plans and specifications and prepared in accordance with Engineering Instruction EI01D010 Construction Cost Estimates.
- ❑ Estimates are developed using vendor quotations, available local reference books and approved construction publications in Japan.
- ❑ Estimates are prepared in accordance with latest Balance of Payments (BOPP) procedures and non-exempt materials are identified by asterisk in the estimates.
- ❑ BOPP analysis/determination statement is provided in the estimates.
- ❑ The Project Manager (PM) provided the Program Amount (PA) and it was compared to the Current Working Estimate (CWE). If the CWE exceeds the PA, the PM was advised.
- ❑ Estimates conform to bidding schedule, payment schedules and construction schedules.
- ❑ A Weighted Guidelines Method was used to determine the profit for the estimate in accordance with Engineering Instruction EI01D010.
- ❑ The applicable exchange rate is used for this project.
- ❑ Estimates have been checked for math errors.
- ❑ Estimates have been checked for conformance to special requirements and construction schedule.

- ❑ Estimates are separated by New Construction Work (Type L), Repair Work (Type K), and Maintenance (Type M) for Operation and Maintenance (O & M) projects. The New Construction Work statutory limitations do not exceed $750,000 (CWE). If so, the PM is advised that the CWE exceeds the statutory limit.

- ❑ Estimates are separated by funding source, if applicable. For example, DECA projects require estimates be separated by DBOF and Surcharge.

- ❑ Estimates have been prepared using applicable IDIQ labor rates.

- ❑ A draft DD Form 1354 Real Estate Transfer document was completed at the final design stage in accordance with the DD Form 1354 Users Handbook, 1 Dec 2002 (http:/www.hq.usace.army.mil/ISD/)

- ❑ Review comments from the government cost engineer have been addressed.

J. COMPUTER AIDED DRAFTING (CAD)

Quality Control Checklist
(DETAILED CHECK)

_____
(insert design organization's name)

Project Name: _____

Location: _____

Design Submittal: (Identify 35%, 90%, etc.)

Project Number: _____ Date:_____

CAD Draftsman: _____ QC Check By: _____

Check when complete, or mark NA if not applicable. Add comments to clarify as appropriate.

- ❑ Ensure font size and fonts conform to the A/E/C CADD Standards.
- ❑ Ensure standard drawing sheets conform to the A/E/C CADD Standards.
- ❑ Verify revision schedule is included on the title sheet or following sheet. This Revision schedule is separate from the Revision block that is located on the border of the sheet.
- ❑ When submitting Cal files, verify line weights and line types are the same as the CADD File
- ❑ The file name for the Cal file shall be as shown: A-1 will be numbered as A01.cal, A-2 will be numbered as A02.cal, Double digit sheets will be numbered as shown; A-10 will be numbered as A10.cal, A-11 will be numbered as A11.cal
- ❑ Ensure a text file, listing all drawings is created and submitted.
- ❑ Are all documents logically ordered and a table of contents provided?
- ❑ Have all documents been signed and dated? Are there initials and dates in title blocks?
- ❑ Are the scale and orientation of the drawings consistent throughout the complete set of drawings?
- ❑ Is there similar nomenclature throughout the drawings?
- ❑ Ensure lettering size is minimum 1/8" height.
- ❑ Ensure legibility of notes.

K. DESIGN ANALYSIS

Quality Control Checklist
(DETAILED CHECK)

_____
(insert design organization's name)

Project Name: _____

Location: _____

Design Submittal: (Identify 35%, 90%, etc.)

Project Number: _____ Date:_____

Architect/Engineer: _____ QC Check By: _____

Check when complete, or mark NA if not applicable. Add comments to clarify as appropriate.

- ❑ All disciplines are covered
  - ❑ Drawings Clear and Concise
  - ❑ Specifications Clear, Concise, and Up-to-Date
  - ❑ Specifications of Unusual Items
  - ❑ Site Design
  - ❑ Geotechnical Design
  - ❑ Civil Design
  - ❑ Architectural Design
  - ❑ Structural Design
  - ❑ Mechanical Design
  - ❑ Electrical Design
  - ❑ Coordination among Disciplines
- ❑ Applicable Lessons Learned are included.
- ❑ That SOW shown in the design submission has been checked against the official 1391 and current design directive.