SOLICITATION, OFFER, AND AWARD *(Construction, Alteration, or Repair)*	1. SOLICITATION NO. W917PM-09-R-0097	2. TYPE OF SOLICITATION [ ] SEALED BID (IFB) [X] NEGOTIATED *(RFP)*	3. DATE ISSUED 14 July 2009	PAGE OF PAGES 1 OF 273

IMPORTANT - The "offer" section on the reverse must be fully completed by offeror.

4. CONTRACT NO.	5. REQUISITION/PURCHASE REQUEST NO.	6. PROJECT NO.

7. ISSUED BY CODE W917PM	8. ADDRESS OFFER TO *(If Other Than Item 7)* CODE
AFGHANISTAN ENGINEER DISTRICT US ARMY CORPS OF ENGINEERS KABUL APO AE 09356 TEL: FAX:	**See Item 7** TEL: FAX:

9. FOR INFORMATION CALL:	A. NAME	B. TELEPHONE NO. *(Include area code)* *(NO COLLECT CALLS)*
	JULIE D MEYER	

SOLICITATION

NOTE: In sealed bid solicitations "offer" and "offeror" mean "bid" and "bidder".

10. THE GOVERNMENT REQUIRES PERFORMANCE OF THE WORK DESCRIBED IN THESE DOCUMENTS *(Title, identifying no., date):*

Afghanistan National Army (ANA) Project Corps Support Battalion (CSB) at Camp Zafer, Herat, Afghanistan.

This project consists of the design and construction of a new Afghanistan National Army, Corps Support Battalion and related support facilities on Camp Zafer, Herat, Afghanistan.

The Government intends to award one(1) Firm-Fixed Price contract resulting from this solicitation.

The magnitude of this effort is estimated between $25,000,000.00 and $100,000,000.00.

The point of contact for this Solicitation is Julie D. Meyer, Contract Specialist at email address: julie.d.meyer@usace.army.mil

11. The Contractor shall begin performance within 3 calendar days and complete it within 420 calendar days after receiving [ ] award, [X] notice to proceed. This performance period is mandatory, [✓] negotiable. *(See _____ .)*

12 A. THE CONTRACTOR MUST FURNISH ANY REQUIRED PERFORMANCE AND PAYMENT BONDS? *(If "YES," indicate within how many calendar days after award in Item 12B.)* [ ] YES [X] NO	12B. CALENDAR DAYS

13. ADDITIONAL SOLICITATION REQUIREMENTS:

A. Sealed offers in original and 1 copies to perform the work required are due at the place specified in Item 8 by 05:00 PM *(hour)* local time 13 Aug 2009 *(date).* If this is a sealed bid solicitation, offers must be publicly opened at that time. Sealed envelopes containing offers shall be marked to show the offeror's name and address, the solicitation number, and the date and time offers are due.

B. An offer guarantee [ ] is, [X] is not required.

C. All offers are subject to the (1) work requirements, and (2) other provisions and clauses incorporated in the solicitation in full text or by reference.

D. Offers providing less than 90 calendar days for Government acceptance after the date offers are due will not be considered and will be rejected.

SOLICITATION, OFFER, AND AWARD (Continued)

(Construction, Alteration, or Repair)

OFFER ***(Must be fully completed by offeror)***

14. NAME AND ADDRESS OF OFFEROR *(Include ZIP Code)*		15. TELEPHONE NO. *(Include area code)*
		16. REMITTANCE ADDRESS *(Include only if different than Item 14)* **See Item 14**
CODE	FACILITY CODE	

17. The offeror agrees to perform the work required at the prices specified below in strict accordance with the terms of this solicitation, if this offer is accepted by the Government in writing within _____ calendar days after the date offers are due. *(Insert any number equal to or greater than the minimum requirements stated in Item 13D. Failure to insert any number means the offeror accepts the minimum in Item 13D.)*

AMOUNTS	SEE SCHEDULE OF PRICES

18. The offeror agrees to furnish any required performance and payment bonds.

19. ACKNOWLEDGMENT OF AMENDMENTS

(The offeror acknowledges receipt of amendments to the solicitation -- give number and date of each)

AMENDMENT NO.										
DATE										

20A. NAME AND TITLE OF PERSON AUTHORIZED TO SIGN OFFER *(Type or print)*	20B. SIGNATURE	20C. OFFER DATE

AWARD ***(To be completed by Government)***

21. ITEMS ACCEPTED:

22. AMOUNT	23. ACCOUNTING AND APPROPRIATION DATA

24. SUBMIT INVOICES TO ADDRESS SHOWN IN *(4 copies unless otherwise specified)*	**ITEM**	25. OTHER THAN FULL AND OPEN COMPETITION PURSUANT TO ☐ 10 U.S.C. 2304(c) ☐ 41 U.S.C. 253(c)
26. ADMINISTERED BY CODE		27. PAYMENT WILL BE MADE BY: CODE

CONTRACTING OFFICER WILL COMPLETE ITEM 28 OR 29 AS APPLICABLE

☐ 28. NEGOTIATED AGREEMENT *(Contractor is required to sign this document and return _____ copies to issuing office.)* Contractor agrees to furnish and deliver all items or perform all work, requisitions identified on this form and any continuation sheets for the consideration stated in this contract. The rights and obligations of the parties to this contract shall be governed by (a) this contract award, (b) the solicitation, and (c) the clauses, representations, certifications, and specifications or incorporated by reference in or attached to this contract.

☐ 29. AWARD *(Contractor is not required to sign this document.)* Your offer on this solicitation, is hereby accepted as to the items listed. This award consummates the contract, which consists of (a) the Government solicitation and your offer, and (b) this contract award. No further contractual document is necessary.

30A. NAME AND TITLE OF CONTRACTOR OR PERSON AUTHORIZED TO SIGN *(Type or print)*		31A. NAME OF CONTRACTING OFFICER *(Type or print)* TEL: EMAIL:
30B. SIGNATURE	30C. DATE	31B. UNITED STATES OF AMERICA BY
		31C. AWARD DATE

PROPOSAL SCHEDULE NOTES

1. Offeror shall submit prices on all items. Scope of work on each items are described in Section 01010.

2. Only one contract for the entire schedule will be awarded under this solicitation. This project will be awarded as a lump sum contract.

3. Costs associated with this project shall include design and construction costs, site development, and utility installation.

4. DESIGN COSTS DEFINITION: Design costs shall consist of design analysis, drawings, and specifications of all facilities.

5. Not Used

6. The government has the right to reduce the number of units in a bid item or choose to delete a base bit item entirely if necessary after the proposals are received.

7. EVALUATION OF OPTIONS: The award will be made to the offeror whose proposal represents the best overall value to the Government. For pricing purposes the Government will evaluate both the Base Proposals and Option Proposals. The Government is not obligated to exercise the options.

8. EXERCISE OF OPTIONAL BID ITEMS: Optional bid items (if any) may, at the option of the Government, be added to the contract at any time within 120 calendar days after receipt of the notice to proceed for Base Proposal.

9. ORDER of WORK: The following order of work shall apply before start of optional bid items:
All base bid contract line items have priority.

11. Period of performance is per Section 01010 Scope of Work – 5.0 Completion of Work, from receipt of notice to proceed; Liquidated damages are assessed at **$1,156.00 per day** for every day of delay past the period of performance as stated per Section 01010 Scope of Work – 5.0 Completion of Work until contract completion for either the Base Items or the Optional Items whichever is applicable.

-END OF SECTION-

SECTION 00010
PROPOSAL SCHEDULE

Provide a price for all items, including those labeled, “Optional Items.” The Government will evaluate the Contractor’s entire proposal to determine which CLINs represent the best value to the Government.

No.	***Description***	***Qty***	***Unit***	***Unit Price***	***Total Amount***

1. Base Proposal:

0001 Design Program:

0001AA	Site Survey / Master Planning A & E Design	1	LS	xxx	$_____
0001AB	As-Built Drawings	1	LS	NTE (Not to Exceed)	$**30,000**

Sub-Total Design Program: **$_____**
(Including NTE Amount)

0002 Site Development / Improvements:

0002AA	Mobilization, Demobilization, Field Office, and General Site Work	1	LS	xxx	$_____
0002AB	Security Measures	1	LS	xxx	$_____
0002AC	Trash Collection Points	6	EA		$_____
0002AD	Potable Water Supply System	1	LS	xxx	$_____
0002AE	Sanitary Sewer and Treatment System	1	LS	xxx	$_____
0002AF	Site Electrical Distribution System	**1**	EA	$_____	$_____
0002AG	Perimeter Fencing	1	LS	xxx	$_____
0002AH	Primary ECP	**1**	EA	$_____	$_____
0002AI	Guard Towers	4	EA	$_____	$_____
0002AJ	Access Road to the Camp (Paved finish)	1	LS	xxx	$_____
0002AK	Gravel inside Camp Roads and Concrete Walkways	1	LS	xxx	$_____

Sub-Total Site Developments / Improvements: **$_____**

0003 Buildings & Building Complexes:

No.	***Description***	***Qty***	***Unit***	***Unit Price***	***Total Amount***
0003AA	BOQ Barracks	3	EA	$_____	$_____
0003AB	Enlisted Open Bay Barracks	6	EA	$_____	$_____
0003AC	Dining Facility with Storage Yard	1	EA	$_____	$_____
0003AD	Battalion HQs Buildings	1	EA	$_____	$_____

0003AE	ToiletShowerAblutionLaundry Facility	1	EA	$_____	$_____
0003AF	Vehicle Refueling Point	1	EA	$_____	$_____
0003AG	Motor Pool Gravel Parking	1	LS	xxx	$_____
0003AH	CSB Vehicle Maint. Bldg (9 Double Bay)	1	EA	$_____	$_____
0003AI	Communication Building	1	EA	$_____	$ _____
0003AJ	POL Storage	1	EA	$_____	$_____
0003AK	General Warehouse Storage	1	EA	$_____	$_____
0003AL	Arms Storage Building	1	EA	$_____	$_____
0003AM	Vehicle Wash Rack	1	LS	xxx	$_____
0003AN	Non-Organic Vehicle Maint.(9 Dble Bay)	2	EA	$_____	$_____
0003AO	GSE Comm. and Armament Maint.	1	LS	xxx	$_____
0003AP	Bunkers	8	EA	$_____	$_____
0003AQ	Security Building	1	EA	$_____	$_____

Sub-Total Buildings & Building Complexes: **$_____**

0004 DBA Insurance	**1**	**JB**	**LS**	$_____

TOTAL BASE BID ITEMS:
$_____
(Including NTE Amount)

2. Optional Bid Items:

0005AA	Perimeter Wall		LS	xxx	$_____
0005AB	MWR GYM and outside Volleyball	1	LS	$_____	$_____
0005AB	Non-Organic Vehicle Maint.(9 Dble Bay)	1	EA	$_____	$_____
0005AC	General Warehouse Storage	1	EA	$_____	$_____
0005AD	Pave inside Camp Roads	1	LS	xxx	$_____

TOTAL ALL OPTIONAL BID ITEMS:
$_____

TOTAL PROPOSAL:
$_____
(Total of all above costs – Base and all Options including NTE)

52.214-5000 Apparent Clerical Mistakes. (MAR 1995)-EFARS

As prescribed at 14.406-2 – Insert the following statement in solicitations and contracts.
ARITHMETIC DISCREPANCIES

(a) For the purpose of initial evaluations of bids, the following will be utilized in the resolving arithmetic discrepancies found on the face of the bidding schedule as submitted by the bidder:
(1) Obviously misplaced decimal points will be corrected:
(2) Discrepancy between unit price and extended price, the unit price will govern;
(3) Apparent errors in extension of unit prices will be corrected;
(4) Apparent errors in addition of lump-sum and extended prices will be corrected.
(b) For the purpose of bid evaluation, the government will proceed on the assumption that the bidder intends his bid to be evaluated on the basis of the unit prices, the totals arrived at by resolution of arithmetic discrepancies as provided above and the bid will be so reflected on the abstract of bids.
© These correction procedures shall not be used to resolve any ambiguity concerning which bid is low.
(end of Statement)

Section 00100 - Bidding Schedule/Instructions to Bidders

CLAUSES INCORPORATED BY FULL TEXT

52.215-1 INSTRUCTIONS TO OFFERORS--COMPETITIVE ACQUISITION (JAN 2004)

(a) Definitions. As used in this provision--

“Discussions” are negotiations that occur after establishment of the competitive range that may, at the Contracting Officer's discretion, result in the offeror being allowed to revise its proposal.

“In writing or written” means any worded or numbered expression which can be read, reproduced, and later communicated, and includes electronically transmitted and stored information.

“Proposal modification” is a change made to a proposal before the solicitation's closing date and time, or made in response to an amendment, or made to correct a mistake at any time before award.

“Proposal revision” is a change to a proposal made after the solicitation closing date, at the request of or as allowed by a Contracting Officer as the result of negotiations.

“Time”, if stated as a number of days, is calculated using calendar days, unless otherwise specified, and will include Saturdays, Sundays, and legal holidays. However, if the last day falls on a Saturday, Sunday, or legal holiday, then the period shall include the next working day.

(b) Amendments to solicitations. If this solicitation is amended, all terms and conditions that are not amended remain unchanged. Offerors shall acknowledge receipt of any amendment to this solicitation by the date and time specified in the amendment(s).

(c) Submission, modification, revision, and withdrawal of proposals. (1) Unless other methods (e.g., electronic commerce or facsimile) are permitted in the solicitation, proposals and modifications to proposals shall be submitted in paper media in sealed envelopes or packages (i) addressed to the office specified in the solicitation, and (ii) showing the time and date specified for receipt, the solicitation number, and the name and address of the offeror. Offerors using commercial carriers should ensure that the proposal is marked on the outermost wrapper with the information in paragraphs (c)(1)(i) and (c)(1)(ii) of this provision.

(2) The first page of the proposal must show--

(i) The solicitation number;

(ii) The name, address, and telephone and facsimile numbers of the offeror (and electronic address if available);

(iii) A statement specifying the extent of agreement with all terms, conditions, and provisions included in the solicitation and agreement to furnish any or all items upon which prices are offered at the price set opposite each item;

(iv) Names, titles, and telephone and facsimile numbers (and electronic addresses if available) of persons authorized to negotiate on the offeror's behalf with the Government in connection with this solicitation; and

(v) Name, title, and signature of person authorized to sign the proposal. Proposals signed by an agent shall be accompanied by evidence of that agent's authority, unless that evidence has been previously furnished to the issuing office.

(3) Submission, modification, or revision, of proposals.

(i) Offerors are responsible for submitting proposals, and any modifications, or revisions, so as to reach the Government office designated in the solicitation by the time specified in the solicitation. If no time is specified in the solicitation, the time for receipt is 4:30 p.m., local time, for the designated Government office on the date that proposal or revision is due.

(ii)(A) Any proposal, modification, or revision received at the Government office designated in the solicitation after the exact time specified for receipt of offers is “late” and will not be considered unless it is received before award is made, the Contracting Officer determines that accepting the late offer would not unduly delay the acquisition; and--

(1) If it was transmitted through an electronic commerce method authorized by the solicitation, it was received at the initial point of entry to the Government infrastructure not later than 5:00 p.m. one working day prior to the date specified for receipt of proposals; or

(2) There is acceptable evidence to establish that it was received at the Government installation designated for receipt of offers and was under the Government's control prior to the time set for receipt of offers; or

(3) It is the only proposal received.

(B) However, a late modification of an otherwise successful proposal that makes its terms more favorable to the Government, will be considered at any time it is received and may be accepted.

(iii) Acceptable evidence to establish the time of receipt at the Government installation includes the time/date stamp of that installation on the proposal wrapper, other documentary evidence of receipt maintained by the installation, or oral testimony or statements of Government personnel.

(iv) If an emergency or unanticipated event interrupts normal Government processes so that proposals cannot be received at the office designated for receipt of proposals by the exact time specified in the solicitation, and urgent Government requirements preclude amendment of the solicitation, the time specified for receipt of proposals will be deemed to be extended to the same time of day specified in the solicitation on the first work day on which normal Government processes resume.

(v) Proposals may be withdrawn by written notice received at any time before award. Oral proposals in response to oral solicitations may be withdrawn orally. If the solicitation authorizes facsimile proposals, proposals may be withdrawn via facsimile received at any time before award, subject to the conditions specified in the provision at 52.215-5, Facsimile Proposals. Proposals may be withdrawn in person by an offeror or an authorized representative, if the identity of the person requesting withdrawal is established and the person signs a receipt for the proposal before award.

(4) Unless otherwise specified in the solicitation, the offeror may propose to provide any item or combination of items.

(5) Offerors shall submit proposals in response to this solicitation in English, unless otherwise permitted by the solicitation, and in U.S. dollars, unless the provision at FAR 52.225-17, Evaluation of Foreign Currency Offers, is included in the solicitation.

(6) Offerors may submit modifications to their proposals at any time before the solicitation closing date and time, and may submit modifications in response to an amendment, or to correct a mistake at any time before award.

(7) Offerors may submit revised proposals only if requested or allowed by the Contracting Officer.

(8) Proposals may be withdrawn at any time before award. Withdrawals are effective upon receipt of notice by the Contracting Officer.

(d) Offer expiration date. Proposals in response to this solicitation will be valid for the number of days specified on the solicitation cover sheet (unless a different period is proposed by the offeror).

(e) Restriction on disclosure and use of data. Offerors that include in their proposals data that they do not want disclosed to the public for any purpose, or used by the Government except for evaluation purposes, shall--

(1) Mark the title page with the following legend: This proposal includes data that shall not be disclosed outside the Government and shall not be duplicated, used, or disclosed--in whole or in part--for any purpose other than to evaluate this proposal. If, however, a contract is awarded to this offeror as a result of--or in connection with-- the submission of this data, the Government shall have the right to duplicate, use, or disclose the data to the extent provided in the resulting contract. This restriction does not limit the Government's right to use information contained in this data if it is obtained from another source without restriction. The data subject to this restriction are contained in sheets [insert numbers or other identification of sheets]; and

(2) Mark each sheet of data it wishes to restrict with the following legend: Use or disclosure of data contained on this sheet is subject to the restriction on the title page of this proposal.

(f) Contract award. (1) The Government intends to award a contract or contracts resulting from this solicitation to the responsible offeror(s) whose proposal(s) represents the best value after evaluation in accordance with the factors and subfactors in the solicitation.

(2) The Government may reject any or all proposals if such action is in the Government's interest.

(3) The Government may waive informalities and minor irregularities in proposals received.

(4) The Government intends to evaluate proposals and award a contract without discussions with offerors (except clarifications as described in FAR 15.306(a)). Therefore, the offeror's initial proposal should contain the offeror's best terms from a cost or price and technical standpoint. The Government reserves the right to conduct discussions if the Contracting Officer later determines them to be necessary. If the Contracting Officer determines that the number of proposals that would otherwise be in the competitive range exceeds the number at which an efficient competition can be conducted, the Contracting Officer may limit the number of proposals in the competitive range to the greatest number that will permit an efficient competition among the most highly rated proposals.

(5) The Government reserves the right to make an award on any item for a quantity less than the quantity offered, at the unit cost or prices offered, unless the offeror specifies otherwise in the proposal.

(6) The Government reserves the right to make multiple awards if, after considering the additional administrative costs, it is in the Government's best interest to do so.

(7) Exchanges with offerors after receipt of a proposal do not constitute a rejection or counteroffer by the Government.

(8) The Government may determine that a proposal is unacceptable if the prices proposed are materially unbalanced between line items or subline items. Unbalanced pricing exists when, despite an acceptable total evaluated price, the price of one or more contract line items is significantly overstated or understated as indicated by the application of cost or price analysis techniques. A proposal may be rejected if the Contracting Officer determines that the lack of balance poses an unacceptable risk to the Government.

(9) If a cost realism analysis is performed, cost realism may be considered by the source selection authority in evaluating performance or schedule risk.

(10) A written award or acceptance of proposal mailed or otherwise furnished to the successful offeror within the time specified in the proposal shall result in a binding contract without further action by either party.

(11) If a post-award debriefing is given to requesting offerors, the Government shall disclose the following information, if applicable:

(i) The agency's evaluation of the significant weak or deficient factors in the debriefed offeror's offer.

(ii) The overall evaluated cost or price and technical rating of the successful and the debriefed offeror and past performance information on the debriefed offeror.

(iii) The overall ranking of all offerors, when any ranking was developed by the agency during source selection.

(iv) A summary of the rationale for award.

(v) For acquisitions of commercial items, the make and model of the item to be delivered by the successful offeror.

(vi) Reasonable responses to relevant questions posed by the debriefed offeror as to whether source-selection procedures set forth in the solicitation, applicable regulations, and other applicable authorities were followed by the agency.

(End of provision)

CLAUSES INCORPORATED BY FULL TEXT

52.215-20 REQUIREMENTS FOR COST OR PRICING DATA OR INFORMATION OTHER THAN COST OR PRICING DATA (OCT 1997)

(a) Exceptions from cost or pricing data. (1) In lieu of submitting cost or pricing data, offerors may submit a written request for exception by submitting the information described in the following subparagraphs. The Contracting Officer may require additional supporting information, but only to the extent necessary to determine whether an exception should be granted, and whether the price is fair and reasonable.

(i) Identification of the law or regulation establishing the price offered. If the price is controlled under law by periodic rulings, reviews, or similar actions of a governmental body, attach a copy of the controlling document, unless it was previously submitted to the contracting office.

(ii) Commercial item exception. For a commercial item exception, the offeror shall submit, at a minimum, information on prices at which the same item or similar items have previously been sold in the commercial market that is adequate for evaluating the reasonableness of the price for this acquisition. Such information may include--

(A) For catalog items, a copy of or identification of the catalog and its date, or the appropriate pages for the offered items, or a statement that the catalog is on file in the buying office to which the proposal is being submitted. Provide a copy or describe current discount policies and price lists (published or unpublished), e.g., wholesale, original equipment manufacturer, or reseller. Also explain the basis of each offered price and its relationship to the established catalog price, including how the proposed price relates to the price of recent sales in quantities similar to the proposed quantities;

(B) For market-priced items, the source and date or period of the market quotation or other basis for market price, the base amount, and applicable discounts. In addition, describe the nature of the market;

(C) For items included on an active Federal Supply Service Multiple Award Schedule contract, proof that an exception has been granted for the schedule item.

(2) The offeror grants the Contracting Officer or an authorized representative the right to examine, at any time before award, books, records, documents, or other directly pertinent records to verify any request for an exception under this provision, and the reasonableness of price. For items priced using catalog or market prices, or law or

regulation , access does not extend to cost or profit information or other data relevant solely to the offeror's determination of the prices to be offered in the catalog or marketplace.

(b) Requirements for cost or pricing data. If the offeror is not granted an exception from the requirement to submit cost or pricing data, the following applies:

(1) The offeror shall prepare and submit cost or pricing data and supporting attachments in accordance with Table 15-2 of FAR 15.408.

As soon as practicable after agreement on price, but before contract award (except for unpriced actions such as letter contracts), the offeror shall submit a Certificate of Current Cost or Pricing Data, as prescribed by FAR 15.406-2.

(End of provision)

CLAUSES INCORPORATED BY FULL TEXT

52.216-1 TYPE OF CONTRACT (APR 1984)

The Government contemplates award of a Firm Fixed Price contract resulting from this solicitation.

(End of provision)

CLAUSES INCORPORATED BY FULL TEXT

52.222-22 PREVIOUS CONTRACTS AND COMPLIANCE REPORTS (FEB 1999)

The offeror represents that --

(a) ( ) It has, ( ) has not participated in a previous contract or subcontract subject to the Equal Opportunity clause of this solicitation;

(b) ( ) It has, ( ) has not, filed all required compliance reports; and

(c) Representations indicating submission of required compliance reports, signed by proposed subcontractors, will be obtained before subcontract awards.

(End of provision)

CLAUSES INCORPORATED BY FULL TEXT

52.222-23 NOTICE OF REQUIREMENT FOR AFFIRMATIVE ACTION TO ENSURE EQUAL EMPLOYMENT OPPORTUNITY FOR CONSTRUCTION (FEB 1999)

(a) The offeror's attention is called to the Equal Opportunity clause and the Affirmative Action Compliance Requirements for Construction clause of this solicitation.

(b) The goals for minority and female participation, expressed in percentage terms for the Contractor's aggregate workforce in each trade on all construction work in the covered area, are as follows:

Goals for minority participation for each trade	Goals for female participation for each trade
Please contact the office of Federal Contract Compliance Program as appropriate	Please contact the office of Federal Contract Compliance Program as appropriate

These goals are applicable to all the Contractor's construction work performed in the covered area. If the Contractor performs construction work in a geographical area located outside of the covered area, the Contractor shall apply the goals established for the geographical area where the work is actually performed. Goals are published periodically in the Federal Register in notice form, and these notices may be obtained from any Office of Federal Contract Compliance Programs office.

(c) The Contractor's compliance with Executive Order 11246, as amended, and the regulations in 41 CFR 60-4 shall be based on (1) its implementation of the Equal Opportunity clause, (2) specific affirmative action obligations required by the clause entitled "Affirmative Action Compliance Requirements for Construction," and (3) its efforts to meet the goals. The hours of minority and female employment and training must be substantially uniform throughout the length of the contract, and in each trade. The Contractor shall make a good faith effort to employ minorities and women evenly on each of its projects. The transfer of minority or female employees or trainees from Contractor to Contractor, or from project to project, for the sole purpose of meeting the Contractor's goals shall be a violation of the contract, Executive Order 11246, as amended, and the regulations in 41 CFR 60-4. Compliance with the goals will be measured against the total work hours performed.

(d) The Contractor shall provide written notification to the Deputy Assistant Secretary for Federal Contract Compliance, U.S. Department of Labor, within 10 working days following award of any construction subcontract in excess of $10,000 at any tier for construction work under the contract resulting from this solicitation. The notification shall list the --

(1) Name, address, and telephone number of the subcontractor;

(2) Employer's identification number of the subcontractor;

(3) Estimated dollar amount of the subcontract;

(4) Estimated starting and completion dates of the subcontract; and

(5) Geographical area in which the subcontract is to be performed.

(e) As used in this Notice, and in any contract resulting from this solicitation, the "covered area" is [Contracting Officer shall insert description of the geographical areas where the contract is to be performed, giving the State, county, and city].

(End of provision)

CLAUSES INCORPORATED BY FULL TEXT

52.233-2 SERVICE OF PROTEST (SEP 2006)

(a) Protests, as defined in section 33.101 of the Federal Acquisition Regulation, that are filed directly with an agency, and copies of any protests that are filed with the Government Accountability Office (GAO), shall be served on the Contracting Officer (addressed as follows) by obtaining written and dated acknowledgment of receipt from
Contracting Officer, US Army Corps of Engineers, House 1, Street 1, West Wazir Akbar Khan (behind Aman High School), Kabul Afghanistan.

(b) The copy of any protest shall be received in the office designated above within one day of filing a protest with the GAO.

(End of provision)

CLAUSES INCORPORATED BY FULL TEXT

52.233-3 PROTEST AFTER AWARD (AUG. 1996)

(a) Upon receipt of a notice of protest (as defined in FAR 33.101) or a determination that a protest is likely (see FAR 33.102(d)), the Contracting Officer may, by written order to the Contractor, direct the Contractor to stop performance of the work called for by this contract. The order shall be specifically identified as a stop-work order issued under this clause. Upon receipt of the order, the Contractor shall immediately comply with its terms and take all reasonable steps to minimize the incurrence of costs allocable to the work covered by the order during the period of work stoppage. Upon receipt of the final decision in the protest, the Contracting Officer shall either--

(1) Cancel the stop-work order; or

(2) Terminate the work covered by the order as provided in the Default, or the Termination for Convenience of the Government, clause of this contract.

(b) If a stop-work order issued under this clause is canceled either before or after a final decision in the protest, the Contractor shall resume work. The Contracting Officer shall make an equitable adjustment in the delivery schedule or contract price, or both, and the contract shall be modified, in writing, accordingly, if--

(1) The stop-work order results in an increase in the time required for, or in the Contractor's cost properly allocable to, the performance of any part of this contract; and

(2) The Contractor asserts its right to an adjustment within 30 days after the end of the period of work stoppage; provided, that if the Contracting Officer decides the facts justify the action, the Contracting Officer may receive and act upon a proposal at any time before final payment under this contract.

(c) If a stop-work order is not canceled and the work covered by the order is terminated for the convenience of the Government, the Contracting Officer shall allow reasonable costs resulting from the stop-work order in arriving at the termination settlement.

(d) If a stop-work order is not canceled and the work covered by the order is terminated for default, the Contracting Officer shall allow, by equitable adjustment or otherwise, reasonable costs resulting from the stop-work order.

(e) The Government's rights to terminate this contract at any time are not affected by action taken under this clause.

(f) If, as the result of the Contractor's intentional or negligent misstatement, misrepresentation, or miscertification, a protest related to this contract is sustained, and the Government pays costs, as provided in FAR 33.102(b)(2) or 33.104(h)(1), the Government may require the Contractor to reimburse the Government the amount of such costs.

In addition to any other remedy available, and pursuant to the requirements of Subpart 32.6, the Government may collect this debt by offsetting the amount against any payment due the Contractor under any contract between the Contractor and the Government.

(End of clause)

CLAUSES INCORPORATED BY FULL TEXT

52.252-1 SOLICITATION PROVISIONS INCORPORATED BY REFERENCE (FEB 1998)

This solicitation incorporates one or more solicitation provisions by reference, with the same force and effect as if they were given in full text. Upon request, the Contracting Officer will make their full text available. The offeror is cautioned that the listed provisions may include blocks that must be completed by the offeror and submitted with its quotation or offer. In lieu of submitting the full text of those provisions, the offeror may identify the provision by paragraph identifier and provide the appropriate information with its quotation or offer. Also, the full text of a solicitation provision may be accessed electronically at this/these address(es):

www.arnet.gov
www.farsite.hill.af.mil

(End of provision

SECTION 00110
ANA CONSTRUCTION (DESIGN-BUILD) – BEST VALUE
PROPOSAL PREPARATION

1. INQUIRIES

Perspective offerors should submit inquiries related to this solicitation by writing or sending email to the following (collect calls will not be accepted):

All questions will be submitted in writing by letter or e-mail to:

U.S. Army Corps of Engineers (USACE)
Afghanistan Engineer District (AED)
Qalaa House, Attention: Julie Meyer
Kabul, Afghanistan

E-MAIL ADDRESS: Julie.d.meyer@usace.army.mil

Please include the solicitation number, and project title with your questions. Written inquires must be Received by this office not later than 4 calendar days prior to the date set for receipt of offers.

Oral explanations or instructions are not binding. Any information given to an offeror which impacts the solicitation and/or offer will be given in the form of a written amendment to the solicitation.

As this is a competitive negotiation acquisition, there is no public bid opening and no information will be given out as to the number of offerors or the results of the competition until all awards are made.

2. DIRECTIONS FOR SUBMITTING PROPOSALS

Offers must be in sealed envelopes/packages, marked and addressed as follows:

MARK PACKAGES:
Solicitation No. **W917PM-08-R-0097**
Offer Closing Date: August 13, **2009**
Offer Closing Time: 5:00PM
(LOCAL KABUL TIME)

ADDRESS PACKAGES TO:
U.S. Army Corps of Engineers (USACE)
Afghanistan Engineer District (AED)
Qalaa House, Attention: Julie.d.meyer@usace.army.mil
Kabul, Afghanistan

Special Instruction Pertaining to Hand Carried Offers: Hand-carried offers must be delivered to the USACE AED offices, Qalaa House, Kabul, Afghanistan. Offers who desire to hand-deliver their offers shall notify the Contract Specialist in advance in order to be met at the entrance gate to Qalaa House Compound.

3. PREPROPOSAL CONFERENCE / SITE VISIT
The Preproposal Conference shall be held at the Corp of Engineers Afghanistan District Headquarter in Kabul at the Qalaa House Compound on July 23, **2009 at 1000 hours (10 am)**. There will **NOT** be an official Site Visit scheduled. Contractors are welcome to visit the site on their own, however all site visits must be coordinated with the resident Engineer Office at Camp Zafar, Herat.

IMPORTANT NOTES. (1) Remarks and explanations addressed during the conference shall not qualify or alter the terms and conditions of the solicitation. (2) The terms and conditions of the solicitation remain unchanged unless the solicitation is formally amended in writing.

4. TELEGRAPHIC OFFERS - - TELEGRAPHIC OFFERS ARE NOT ACCEPTABLE.
However, offers may be withdrawn by written or telegraphic notice. Any telegram to withdraw an offer sent to this office must be received in the office designated in the Request for Proposal (RFP) for receipt of offers not later than the exact date and time set for receipt of proposals. A telegraphic withdrawal of an offer received in such office by telephone from the receiving telegraph office not later than the exact date and time set for receipt of proposals shall be considered. However, the telephone message shall be confirmed by the telegraph company by sending a copy of the written telegram that formed the basis for the telephone call. The written telegram shall be sealed in an envelope by a proper official and sent to the office designated in the RFP for receipt of offers. The official shall write on the envelope (1) the date and time of receipt and by whom, and (2) the number of the RFP, and shall sign the envelope. The offeror is responsible to inform the telegraph company of these requirements. No one from this office will be dispatched to the local telegraph office to pick up any telegram for any reason.

5. FACSIMILE OFFERS

Facsimile offers, modifications thereto, or cancellations of offers will not be accepted.

6. PROPOSAL SUBMISSION REQUIREMENTS AND INSTRUCTIONS

a. REQUIREMENT FOR SEPARATE PRICE AND TECHNICAL PROPOSALS.

(1) Each Offeror must submit both a Price Proposal and a Technical Proposal. The Price Proposal and the Technical Proposal must be submitted as separate volumes. Ensure that the outside of each separate volume is clearly marked to indicate its contents; and the identity of the offeror. Additionally, clearly identify the “original” cost/price proposal and the “original” technical proposal on the outside cover.

(2) Both the Price Proposal and the Technical Proposal must be received by the closing date and time set for receipt of proposals.

(3) No dollar amounts from the Price Proposal are to be included in the Technical Proposal.

(4) All information intended to be evaluated as part of the Technical Proposal must be submitted as part of the Technical Proposal. Do not cross-reference similar material in the Price Proposal, or vice versa. Also, do not include links to websites in lieu of incorporating information into your proposal.

(5) Do not include exceptions to the terms and conditions of the solicitation in either the technical or price proposal. Should the offer include any standard company terms and conditions that conflict with the terms and conditions of the solicitation, the offer may be determined "unacceptable" and thus ineligible for award. Should the offeror have any questions related to specific terms and conditions, these should be resolved prior to submission of the offer.

b. DISCUSSIONS. The Government does not intend to enter into discussions with offerors prior to determining those contractors within the competitive range, in accordance with FAR 52.215-1, Instructions to Offerors—Competitive Acquisitions, Alternate I.

c. COST OR PRICING DATA. Offerors are not required to submit Cost or Pricing Data with their offers.

d. GENERAL INSTRUCTIONS.

(1) Submit only the hard-copy paper documents and the electronic files specifically authorized and/or required elsewhere in this section. Do not submit excess information, to include audio-visual materials, electronic media, etc.

(2) Use only 8 ½ by 11 inch paper for hard copy submissions, unless another paper size is specifically authorized elsewhere in this section for a particular submission. Do not use fold-outs (e.g.,11” x 14” or 11” x 17” sheets) unless specifically authorized in this section for a particular submission. Do not use a font size smaller than 10, an unusual font style such as script, or condensed print for any submission. All page margins must be at least 1 inch wide, but may include headers and footers.

(3) The preferred method for assembling your proposals is to use three-ring binders; however, the use of pressboard or other report covers with compression or other type fasteners is acceptable. Do not use spring clamps or exceed the recommended capacity of the fastener or binder. Do not use plastic multi-hole/spiral binding systems, heat binding systems, or other systems which do not facilitate the ready insertion of additional pages.

(4) “Confidential” projects cannot be submitted to demonstrate capability unless all of the information required for evaluation as specified herein can be provided to the Government as part of the Offeror’s technical proposal. Offerors that include in their proposals information that they do not want disclosed to the public for any purpose, or used by the Government except for evaluation purposes, must be clearly marked in accordance with the instructions at FAR 52.215-1, “Instructions to Offerors— Competitive Acquisition”, paragraph (e), “Restriction on disclosure and use of data”.

(5) In the case of an Offeror that is part of a large, multi-segmented business concern, provide information directly pertaining to the specific segment of the business concern (i.e., the division, group, unit, etc.) that will perform work under the prospective contract.

(6) For submissions with page limitations, the pages will be counted as follows: One side of the paper is one page; information on both the back and front of one sheet of paper will be counted as two pages. Where authorized, fold-out pages (11" x 14" or 11" x 17") will count as one page. Pages furnished for organizational purposes only, such as a “Table of Contents” or divider tabs, are not included in the page limitation.

e. SPECIFIC INSTRUCTIONS FOR THE PRICE PROPOSAL

(1) Number of Sets of the Price Proposal. Submit the ORIGINAL and TWO additional hard copy set of the Price Proposal.

(2) Size Restrictions and Page Limits. Use only 8 ½” x 11” pages. There are no page limits set for the price proposal. However, limit your response to information required by this solicitation. Excess information will not be considered in the Government’s evaluation.

(3) Format and Contents of the Price Proposal and List of Tabs. The Price Proposal shall be appropriately labeled as such and shall be organized as indicated in the following chart. Note: If the Offeror is not required to submit any information under a listed Tab in accordance with the instructions below, that tab can be omitted. However, do not renumber the subsequent tabs.

TAB	CONTENTS OF THE PRICE PROPOSAL
#1	The Proposal Cover Sheet
#2	The SF1442 and Acknowledgement of Amendments
#3	Section 00010, Pricing Schedule
#4	Representations, Certifications, and Other Statements of Offerors
#5	JV Agreement, if applicable.

(4) Detailed Submission Instructions for the Price Proposal

TAB 1: The proposal cover sheet is required by FAR 52.215-1(2) (c) (i)-(v) and must be submitted by all offerors. This provision, titled “Instructions to Offerors Competitive Acquisition,” and the format for the proposal cover sheet are furnished elsewhere in this section.

TAB 2: The SF 1442, Solicitation, Offer, and Award is to be completed by all Offerors and duly executed with an original signature by an official authorized to bind the company in accordance with FAR 4.102. Any and all amendments must be acknowledged by all Offerors in accordance with the instructions on the Standard Form 30, Amendment of Solicitation.

TAB 3: Section 00010, Pricing Schedule is to be completed in its entirety by all Offerors. See Section 00010 with attached notes, for further instructions.

TAB 4: All Offerors must have electronically completed the annual representations and certifications on the “Online Representations and Certifications Application” (ORCA) website or respond with the completed representations / certifications found in the solicitation.. The offerors are responsible for ensuring that these on-line Representations and Certifications are updated as necessary to reflect changes, but at least annually to ensure that they are kept current,

accurate and complete. Additionally, the offeror must also complete and return the "Representations, Certifications, and Other Statements of Offerors" included in the solicitation. If the offeror is a Joint Venture, all participants must separately complete both the ORCA Representations and Certifications.

TAB 5: If the Offeror is a Joint Venture (JV), include a copy of the JV Agreement. If a JV Agreement has not yet been finalized/approved, indicate its status. JV Agreements must clearly indicate the percentages of the JV participants, in particular the percent of the controlling party, and a clear delineation of responsibilities and authorities between the JV parties.

f. SPECIFIC INSTRUCTIONS FOR THE TECHNICAL PROPOSAL

(1) Number of Sets of the Technical Proposal. Submit the (1) ORIGINAL and (1) additional set of the written Technical Proposal, with each set separately packaged.

(2) Format and Contents of the Technical Proposal and List of Tabs. The original and all copies of the technical proposal will be appropriately labeled as such. Each set shall be organized using the tabs specified in the following chart. Note: The main tabs directly correlate to the evaluation factors identified in Section 00120.

TAB	CONTENTS OF THE TECHNICAL PROPOSAL
Factor #1	EXPERIENCE
Factor #2	PROJECT MANAGEMENT PLAN
Factor #3	RESOURCES and CAPABILITIES
Factor #4	PAST PERFORMANCE

(3) Page Limitations. See paragraphs 6.d.(2) and 6.d.(6) above for format and page count instructions. The following page limitations are established for each factor described above:

- Factor #1, Experience – Limited to 1 Experience Form and 5 pages of representative design information per project. Maximum 10 projects.
- Factor #2, Project Management Plan – Limited to 6 pages total, not including organizational charts
- Factor #3, Resources – Limited to 1 page for each resume/Individual provided and three pages for capacity.
- Factor #4, Past Performance – No page limitation

Tables of content, proposal cover letters, and tabs between proposal information do not count toward any page limitations in the proposal.

(4) Detailed Submission Requirements for the Technical Proposal. The following is a detailed description of the information to be submitted under each TAB.

(i) **TAB 1: FACTOR 1, EXPERIENCE:** Demonstrate the experience of the offeror and/or team, including sub-contractors, on projects same/similar to that described in the solicitation. The

projects submitted must have been performed by the offeror and/or same team member(s) who will be providing similar services under the prospective contract.

The Contractor shall complete a minimum of five (5), but no more than ten (10), "Experience Information" forms, attached at the end of this section, in response to this factor. All blocks must be filled in and all data should be accurate, current, and complete. All projects submitted must have been underway or completed with the last five years within US DOD's Centcom or Africom area of authority including: Afghanistan, Tajikistan, Iraq, Pakistan etc.. At least one (1) of the projects provided must be valued at over $10 million US, and all other projects must be at least $5 million US. For each project that included design, the offer may also submit up to 5 pages of information representative of the design efforts of the project.

(ii) **TAB 2: FACTOR 2, PROJECT MANAGEMENT PLAN:** Provide a narrative that addresses the offeror's project management plan. The plan must address the following elements, as a minimum:

- Procedures used to manage the project, to include project management, quality control, and safety;
- How the contractor plans to meet major design and construction project milestones in the specifications that reflects completion of all work within the period of contract performance.
- Provide a narrative response that addresses timely delivery and receipt of equipment and materials at the job site which coincides with the major construction project milestones and provides for protection of equipment and materials to and from an isolated project site in a hostile environment.
- Management of concurrent work on multiple job sites if it is applicable to this project.

The offeror shall include an organizational chart depicting lines of authority and responsibility for all personnel/entities on the project, including subcontractors, from the lowest level to the corporate level. The organizational chart shall clearly indicate which entity has overall authority for the contract and identify by name and title the single Point of Contact to the Government for all project-related matters.

(iii) **TAB 3: FACTOR 3, RESOURCES and CAPABILITIES**:

The Offeror shall provide a description of the personnel, including management personnel, equipment, financial, and other resources it intends to use to complete the work required by this solicitation. The Offeror shall describe how its planned resourcing of the work required by the solicitation will result in timely completion without cost growth. The Offeror must explain whether it intends on utilizing personnel, including management personnel, equipment, financial, or other resources that are or will be devoted to other projects, and, if so, how it plans on ensuring that the use of such resources across multiple projects does not negatively impact performance of the work required by the solicitation. The Offeror shall explain its planned approach for ensuring adequate financial resources are available to fund this project from notice to proceed through contract completion, to ensure the project remains on schedule and that all required payments (such as subcontractor and vendor payments) are made in a timely fashion.

The Offeror must indicate whether it currently has the resources it plans to utilize, or, if not, describe its plan to acquire those resources in a manner that will ensure successful completion of the work. The Offeror must also provide a list of current projects less than 90% complete as of the date of the proposal, along with the dollar value of payments remaining on the project, scheduled completion date, location of the project and percentage of work actually completed.

The Offeror shall provide resumes, which address at a minimum professional experience and degrees, for the following key personnel:

1. Project Manager – Design
2. Project Manager - Construction
6. Senior Civil Engineer
7. Senior Electrical Engineer

3. Safety Officer
4. Quality Control Manager
5. Architect
8. Senior Mechanical Engineer
9. Construction Superintendent

All key personnel should have at least five (5) years of professional experience in their field of expertise. Key personnel should also have a degree in their field.

Documentation of a credible approach to resourcing the work required by this solicitation includes, but is not limited to, subcontractor agreements, letters of intent from key personnel, equipment inventory records or proposed equipment rental agreements, letters of credit, procedures for payment of subcontractors, narratives describing sources of construction materials and transportation and logistical support, or any documentation that demonstrate the Offeror's capability to complete the work in a timely manner without cost growth.

(iv) **TAB 4: FACTOR 4, PAST PERFORMANCE:** For the projects listed under Factor 1 – Experience provide: letters of recommendations, performance evaluations, letters of appreciation, commendations, awards or certificates of appreciation:

(The following projects are to be the same projects submitted under Factor 1 Experience.)

1. Project Name & Location:
2. Customer Point of Contact: (Note: the Government may contact this customer to verify the information provided on this form)

Name:
Address:
Phone number:
Email Address:

3. Problems encountered and corrective actions taken:
4. List Change Orders and their circumstances:
5. Project scheduled Completion date Actual Completion date:

IF the above dates are different, explain reason for the change:

6. Initial Project Budget (US Dollars)
Final Actual Project cost (US Dollars)

7. Safety record and accident reports.

8. References: Submit the following, Customer Satisfaction letters, Letters of Appreciation, Performance Evaluations, Certification of Achievements, Letters of Recommendations. (Note: A neutral rating will be assigned IF no past performance is submitted) ATTACHMENT-B4 (CONTRACTOR PERSONNEL'S EXPERIENCE & QUALIFICATION)

The Contractor Performance Assessment Reporting System (to include ACASS, CCASS, and CPARS) will be utilized to validate past performance ratings on Department of Defense contracts and any other past performance information the Government deems necessary to evaluate a contractor's past performance. Firms without a history of past performance will be given a neutral rating.

The Government may contact references provided as part of Factor 1 – Experience for information regarding the offeror's past performance on the project and for the purposes of assessing and verifying the scope of the work performed. Offerors should provide accurate, current, and complete contact information for references provided in the project descriptions.

7. Proposal Cover Sheet

PROPOSAL COVER SHEET

1. Solicitation Number:

2. The name, address, and telephone and facsimile numbers of the Offeror (and electronic address if available):

3. A statement specifying the extent of agreement with all terms, conditions, and provisions included in the solicitation and agreement to furnish any or all items upon which prices are offered at the price set opposite each item. Statement to include any exceptions in technical or cost/price proposal or exceptions inherent in Offeror's standard terms and conditions.

4. Names, titles, and telephone and facsimile numbers (and electronic addresses if available) of persons authorized to negotiate on the Offeror's behalf with the Government in connection with this solicitation:

5. Name, title, and signature of person authorized to sign the proposal. Proposals signed by an agent shall be accompanied by evidence of that agent's authority, unless that evidence has been previously furnished to the issuing office.

8. SOURCE SELECTION USING THE BEST VALUE PROCESS. The Government will select the offer that represents the best value to the Government by using the trade-off process described in FAR Part 15. This process permits tradeoffs between cost/price and technical ("non-cost") factors and allows the Government to accept other than the lowest priced offer. The award decision will be based on a comparative assessment of proposals against all source selection criteria in the solicitation. See Section 00120.

For the award decision, all evaluation factors other than cost or price, when combined, are more important than price. All non price factors will be treated equally.. The Government is concerned with striking the most advantageous balance between technical merit ("quality") and price to the Government (i.e., the price).

(END OF SECTION)

EXPERIENCE INFORMATION

(To be completed by Contractor)

1. Contractor: **Name:** **Address:**	**2. Contract /Task Order(TO) /Purchase Order (PO) Number:**
	3. Contract/TO/PO Dollar Value:
	4. Contract/TO /PO Status: Active Complete **Completion Date (w/ extensions):**
5. Project Title: **Location:**	
6. Project Description:	
7. Project Owner or Project Manager for the Client – provide: **Name:** **Address:** **Telephone Number and E-mail:**	

SECTION 00120
ANA CONSTRUCTON (DESIGN-BUILD) – BEST VALUE

PROPOSAL EVALUATION AND CONTRACT AWARD

1. ELIGIBILITY FOR CONTRACT AWARD

In accordance with the FAR, no contract shall be entered into unless the contracting officer ensures that all requirements of law, executive orders, regulations, and all other applicable procedures, including clearances and approvals, have been met. This includes the FAR requirement that no award shall be made unless the contracting officer makes an affirmative determination of responsibility. To be determined responsible, a prospective contractor must meet the general standards in FAR Part 9 and any special standards set forth in the solicitation.

2. SOURCE SELECTION USING THE BEST VALUE PROCESS

The Government will select the offer that represents the best value to the Government by using the trade-off process described in FAR Part 15. This process permits tradeoffs between cost/price and technical ("non-cost") factors and allows the Government to accept other than the lowest priced offer. The award decision will be based on a comparative assessment of proposals against all source selection criteria in the solicitation.

3. RELATIVE IMPORTANCE OF PRICE TO THE TECHNICAL EVALUATION FACTORS

All evaluation factors other than cost or price, when combined, are more important than price. All non price factors will be treated equally. The Government is concerned with striking the most advantageous balance between technical merit ("quality") and price to the Government (i.e., the price). The degree of importance of price could become greater depending upon the equality of the technical proposals. If competing technical proposals are determined to be essentially equal, price could become the controlling factor.

4. EVALUATION OF THE PRICE PROPOSALS

a. Price will be evaluated and considered but will not be scored or combined with other aspects of the proposal evaluation. The proposed prices will be analyzed for reasonableness. They may also be analyzed to determine whether they are realistic for the work to be performed; reflect a clear understanding of the requirements; and are consistent with the Offeror's Technical Proposal. Additionally, all offers will be analyzed for unbalanced pricing.

b. The price will be used along with the technical evaluation to make selection for award. Since evaluation of the price proposal will represent a portion of the total evaluation, it is possible that an offeror might not be selected for award because of unreasonable, unrealistic, or incomplete price proposal information. The Government will evaluate the format and clarity of the price proposal.

5. EVALUATION OF THE TECHNICAL PROPOSAL

The Technical Proposal will be evaluated based on the following evaluation criteria:

a. **FACTOR 1: EXPERIENCE:**

The Government will evaluate the relevant work experience of the offeror and their proposed team, including subcontractors, on projects same/similar to that described in this solicitation. Offerors with experience on same/similar relevant projects (type of services, similar dollar value, complexity, USACE design / construction requirements,performance in the Centcom or Africom area of authority including: Afghanistan, Tajikistan, Iraq, Pakistan etc.) and applicable quality standards) will receive a higher rating than those with dissimilar or non-relevant projects.

b. **FACTOR 2, PROJECT MANAGEMENT PLAN:**

Responses to this factor will be evaluated for:

- The offeror's ability manage the project, control quality and safety;
- How the offeror plans to meet the major design and construction project milestones.
- The offeror's understanding of the work efforts and its ability to provide quality, responsive, and timely performance over the planned life of the project;
- If the offeror has a sound plan addressing timely delivery and receipt of equipment and materials at the job site which coincides with the major construction project milestones, and which provides for protection of equipment and materials to and from an isolated project site in a hostile environment.
- Management of concurrent work on multiple job sites.

In addition, the organizational chart will be evaluated for a clear depiction of the lines of authority and responsibility for all personnel/entities on the project, including subcontractors, from the lowest level to the corporate level. The organizational chart shall clearly indicate which entity has overall authority for the contract and identify by name and title the single Point of Contact to the Government for all project-related matters.

c. **FACTOR 3, RESOURCES and CAPABILITIES:**

The Offeror's proposal under this factor will be evaluated as to whether the Offeror has presented a credible approach to resourcing the work required by the solicitation. In assigning the appropriate adjectival rating, the Government will consider whether the Offeror has demonstrated that it has, or has a credible plan to obtain, adequate personnel (including management personnel), equipment, financial, and other resources to perform and complete the work by the contract completion date without cost growth.

d. **FACTOR 4, PAST PERFORMANCE:**

The Government will evaluate past performance information to assess the level of performance risk associated with the Offeror's likelihood of success in performing the requirements stated in the solicitation. The currency and relevance of the information (as determined by the Government), the source of the information, context of the data, and general trends in the contractor's performance may be considered. Information submitted by the Offeror pertaining to recent, relevant contracts will be evaluated as well as data obtained from other sources, including automated databases and questionnaires. References other than those identified by the Offeror may be contacted by the Government. The Government may take into consideration the offeror's performance of contracts with the agency; other Federal, State, and local government activities; and commercial concerns. The result will be a performance risk rating based on each Offeror's record of past performance.

For the purpose of the past performance evaluation, offerors shall be defined as business arrangements and relationships, such as Joint Venture participants, teaming partners, and major

subcontractors. The past performance record of each firm in the business arrangement may be evaluated by the Government.

In the case of an Offeror without a record of recent, relevant past performance (and for which there is also no recent, relevant past performance information for its predecessor companies or key subcontractors), or for whom information on past performance is not available or cannot be verified, the Offeror will not be evaluated favorably or unfavorably on past performance. This does not preclude the Government from making award to a higher-priced Offeror with a favorable past performance record over a lower-priced Offeror with a neutral past performance rating.

6. RELATIVE IMPORTANCE OF THE TECHNICAL FACTORS

All technical factors will be treated equally to one another in the evaluation process.

7. GENERAL TECHNICAL CRITERIA

a. Material omission(s) may cause the technical proposal to be rejected as unacceptable.

b. Technical proposals which do not provide the specified information in the specified location in accordance with the submission instructions may be downgraded. The Government is under no obligation to search for information that is not in the specified location.

c. Proposals which are generic, vague, or lacking in detail may be downgraded. The offeror's failure to include information that the Government has indicated should be included may result in the proposal being downgraded and/or being found deficient if inadequate detail is provided.

d. The Government cannot make award based on a deficient offer. Therefore, a rating of "Unsatisfactory" under any factor will make the offer ineligible for award, unless the Government elects to enter into discussions with that Offeror and all deficiencies are remedied in a revised proposal.

CLAUSES INCORPORATED BY FULL TEXT

8. 52.217-5 EVALUATION OF OPTIONS (JUL 1990)

Except when it is determined in accordance with FAR 17.206(b) not to be in the Government's best interests, the Government will evaluate offers for award purposes by adding the total price for all options to the total price for the basic requirement. Evaluation of options will not obligate the Government to exercise the option(s).

(End of provision)

THE DESIGN/BUILD PROCESS

PART 1 - GENERAL

1. DESIGN/BUILD (DB) PROCESS

The facility shall be designed and built by a single DB contractor. The DB contractor may be a single firm or a team of firms that includes registered Architects and Engineers either employed by or subcontracted to the DB contractor. Licensing jurisdiction of Architects and Engineers of record shall be shall be verifiable. The DB

contractor shall be the Architect/Engineer-of-Record, whether the DB contractor utilizes services of licensed architects and engineers employed by its firm or subcontracts with independent architectural and/or engineering firm(s). The DB contractor shall be solely liable for design errors and/or omissions and should be insured as the A-E firm against design errors and omissions.

Section 00555, DESIGN CONCEPT DOCUMENTS identifies project documents furnished herewith to be used as the basis for the project design and construction documents. The successful Offeror shall be required to complete the design and construction documentation, and construct the project in compliance with these completed requirements.

2. OUTLINE DESCRIPTION OF THE DB PHASE

No work can begin on any phase of the process until an authorization Clearance for construction for that phase is issued.

2.1 PROPOSAL PHASE

The Proposal Phase includes the period from the time from the issuance of the Request for Proposals (RFP) through the selection process and the final award of the DB contract.

The proposals to be submitted include a Management/Technical Proposal and a Cost/Price Proposal. The contents and organization of the proposal is described in SECTION 00110 - PROPOSAL PREPARATION. The Government will evaluate and award the DB contract to a single Offeror based upon the criteria which are outlined in SECTION 00120 - PROPOSAL EVALUATION AND CONTRACT AWARD.

2.2 DESIGN PHASE

The successful DB contractor shall develop and submit for formal review three submittals and the final design. The DB contractor is encouraged to develop and submit multiple cost saving proposals for innovative design alternatives.

2.2.1 The Design Phase will consist of three parts as follows:

a. Part 1 will be the basic services required to develop the first submittal which represents: 100% complete drawings and specifications for site preparation work, utility construction, paving, foundation, and structural diaphragm of all work and approximately 35% complete drawings and specifications of all other required construction documents. Part I also includes incorporating the revisions identified in the First submittal review.

After approval of the Part 1 drawings and specification submittal, the Government may issue a Clearance for Construction letter to commence with the Build Phase for all site and off-site utilities, clearing, grubbing, rough grading the site, demolition work, parking lot base course, foundation, and structural framing.

A Pre-design meeting will be conducted to distribute as-built drawings to the DB contractor, finalize and clarify technical information, and clarify other necessary information.

b. Part 2 shall include all design services required to complete the second design submittal: 100% complete drawings and specifications for site preparation work, utility construction, paving, foundation, and structural diaphragm of all work and approximately 65% complete drawings and specifications of all other required construction documents. Part 2 design shall not begin until an approval of the Part 1 submittal is issued.

c. Part 3 shall include all design services required to complete the third design submittal (100%). Part 3 design shall not begin until an approval of the Part 2 submittal is issued.

3. BUILD PHASE

The Build Phase will be initiated by an authorization letter.

The authorization letter will be provided separately by the Contracting Officer for each phase of the work. The Government may give the DB Contractor authorization for the Build Phase for portions of the work following review and approval of the First Design Submittal.

Weekly coordination meetings will be held at which, as a minimum, the DB Contractor's Project Manager, a representative of the Designer, the site Superintendent, and the Contractor's Quality Control Manager shall be present.

4. PROJECT SCHEDULE:

The following is an internal design schedule and is subject to modification by the Offeror to suit their particular method of operation. Overall time constraints are required and cannot be changed except by contract modification. Prospective offerors shall be required to submit a complete schedule for design and construction that meets or exceeds the overall time goals of the Government for this project.

Notice to Proceed	following Award of Contract (upon written notification)
Design Phase - Basic Services Pre-design Meeting	within 7 days from Award of Contract
Design Submittal Due	within 30 days following Award of Contract
Submittal Review Conference ***(location TBD)***	within 7 days following submittal review
Incorporate Changes to Submittal (Re-Submit for Review and Approval 100% design submittal)	within 7 days following review conference
Build Phase Authorization for Remainder of Work	Upon approval of design submittal
Total Design and Construction Period	420 days (performance period includes design and construction phases, per Section 01010 Scope of Work – 5.0 Completion of Work)

4. LIQUIDATED DAMAGES:

Liquidated damages in the amount of **$1,156.00** every calendar day of delay shall be assessed and charged to the Contractor.

All days are in calendar days.

PART 2 - PRODUCTS (NOT APPLICABLE)

PART 3 - EXECUTION (NOT APPLICABLE)

--END OF SECTION--

SECTION 00555

DESIGN CONCEPT DOCUMENTS

PART 1 GENERAL

1.1 GENREAL

This section identifies documents issued with this RFP which establish the concept or basis for the project design. These requirements are minimum standards and may be exceeded by the Offeror. Deviations from these concepts and standards may be approved if considered by the Government to be in its best interests.

The extent of development of these requirements in no way relieves the successful Offeror from the responsibility of completing the design, construction documentation, and construction of the facility in conformance with applicable criteria and codes.

1.2 ENGINEERING AND DESIGN CRITERIA

General design requirements are set forth in this RFP herein. The Specifications Divisions 02 thru 16 is the primary specifications criteria for the design and construction of the project. No design criteria will be furnished by the Afghanistan Engineer District except that which may be required for design and is not available from commercial sources or from the Construction Criteria Base (CCB) or 'Techinfo' website located at http://www.wbdg.org/ccb/ . The references within CCB must be obtained by the A/E if the criteria are required or desired. All design, unless otherwise specified, shall be based on nationally recognized industry standard, criteria, and practice.

1.3 APPENDIX DOCUMENTS

See Appendices for further technical requirements, criteria, and parameters that are a part of this contract.

1.4 SPECIFICATIONS

Specifications included herein shall be utilized as design criteria and minimum standards for the corresponding construction work. The successful Offeror shall develop complete construction specifications using the criteria included in these specifications.

The Government will provide Division 1 specifications sections as required, to the successful Offeror; and these sections shall be included in the final construction specifications without change. The Design Build Contractor shall furnish these specifications on electronic media for the production of construction specifications when requested. These specifications shall be submitted together with other required contractor prepared project construction documents during the Second Design Submittal of the Design Phase, Part II.

1.5 ORDER OF PRECEDENCE

In case of conflict, duplication, or overlap of design criteria specified in the documents referenced in this section, the following order of precedence shall be followed:

1. Contract Award Document and referenced publications therein.
2. Written requirements supersede drawings.

1.6 MANDATORY CRITERIA

Portions of the design criteria documents provide mandatory criteria. Mandatory criteria consists of drawings, schematics, specifications, and other requirements which shall not be altered or modified for proposal submittal or subsequent final design except for minor adjustments for coordination or except for cost reduction proposals as specified in Section 00150 - THE DESIGN BUILD PROCESS. Non-mandatory criteria shall be considered minimum requirements and may be enhanced, improved, or substituted to better suit design requirements or to improve evaluation consideration. Mandatory requirements are as listed below. All other design criteria shall be considered non-mandatory.

Work Plan
Boundary survey plan
Topographic survey plan
Any mandatory criteria referenced within Project Program.
Any other criteria listed herein which is listed, shown or implied as mandatory.

1.7 ADDITIONAL DOCUMENTS/CRITERIA FURNISHED BY THE GOVERNMENT

The following documents will be furnished to the Design/Build Contractor when requested by the Offeror or Contractor:

Design Criteria published by the Government such as Technical Manuals (TM), Engineer Manuals (EM), Engineer Technical Letters (ETL) and other documents related to the design referenced herein which are not available on the Internet, including the CCB website.

Commercial design criteria and specifications will not be furnished by the Government.

Conversion of electronic media to other formats shall be the responsibility of the Design Build Contractor.

PART 2 PRODUCTS (Not Applicable)

PART 3 EXECUTION (Not Applicable)

-- End of Section --

Section 00600 - Representations & Certifications

CLAUSES INCORPORATED BY FULL TEXT

52.204-3 TAXPAYER IDENTIFICATION (OCT 1998)

(a) Definitions.

Common parent, as used in this provision, means that corporate entity that owns or controls an affiliated group of corporations that files its Federal income tax returns on a consolidated basis, and of which the offeror is a member.

Taxpayer Identification Number (TIN), as used in this provision, means the number required by the Internal Revenue Service (IRS) to be used by the offeror in reporting income tax and other returns. The TIN may be either a Social Security Number or an Employer Identification Number.

(b) All offerors must submit the information required in paragraphs (d) through (f) of this provision to comply with debt collection requirements of 31 U.S.C. 7701(c) and 3325(d), reporting requirements of 26 U.S.C. 6041, 6041A, and 6050M, and implementing regulations issued by the IRS. If the resulting contract is subject to the payment reporting requirements described in Federal Acquisition Regulation (FAR) 4.904, the failure or refusal by the offeror to furnish the information may result in a 31 percent reduction of payments otherwise due under the contract.

(c) The TIN may be used by the Government to collect and report on any delinquent amounts arising out of the offeror's relationship with the Government (31 U.S.C. 7701(c)(3)). If the resulting contract is subject to the payment reporting requirements described in FAR 4.904, the TIN provided hereunder may be matched with IRS records to verify the accuracy of the offeror's TIN.

(d) Taxpayer Identification Number (TIN).

___ TIN:.----------

___ TIN has been applied for.

___ TIN is not required because:

___ Offeror is a nonresident alien, foreign corporation, or foreign partnership that does not have income effectively connected with the conduct of a trade or business in the United States and does not have an office or place of business or a fiscal paying agent in the United States;

___ Offeror is an agency or instrumentality of a foreign government;

___ Offeror is an agency or instrumentality of the Federal Government.

(e) Type of organization.

___ Sole proprietorship;

___ Partnership;

___ Corporate entity (not tax-exempt);

___ Corporate entity (tax-exempt);

___ Government entity (Federal, State, or local);

___ Foreign government;

___ International organization per 26 CFR 1.6049-4;

___ Other----------

(f) Common parent.

___ Offeror is not owned or controlled by a common parent as defined in paragraph (a) of this provision.

___ Name and TIN of common parent:

Name----------

TIN----------

(End of provision)

CLAUSES INCORPORATED BY FULL TEXT

52.204-8 ANNUAL REPRESENTATIONS AND CERTIFICATIONS (FEB 2009)

(a)(1) The North American Industry Classification System (NAICS) code for this acquisition is 237310.

(2) The small business size standard is ---------- [insert size standard].

(3) The small business size standard for a concern which submits an offer in its own name, other than on a construction or service contract, but which proposes to furnish a product which it did not itself manufacture, is 500 employees.

(b)(1) If the clause at 52.204-7, Central Contractor Registration, is included in this solicitation, paragraph (d) of this provision applies.

(2) If the clause at 52.204-7 is not included in this solicitation, and the offeror is currently registered in CCR, and has completed the ORCA electronically, the offeror may choose to use paragraph (d) of this provision instead of completing the corresponding individual representations and certifications in the solicitation. The offeror shall indicate which option applies by checking one of the following boxes:

(__) Paragraph (d) applies.

(__) Paragraph (d) does not apply and the offeror has completed the individual representations and certifications in the solicitation.

(c)(1) The following representations or certifications in ORCA are applicable to this solicitation as indicated:

(i) 52.203-2, Certificate of Independent Price Determination. This provision applies to solicitations when a firm-fixed-price contract or fixed-price contract with economic price adjustment is contemplated, unless--

(A) The acquisition is to be made under the simplified acquisition procedures in Part 13;

(B) The solicitation is a request for technical proposals under two-step sealed bidding procedures; or

(C) The solicitation is for utility services for which rates are set by law or regulation.

(ii) 52.203-11, Certification and Disclosure Regarding Payments to Influence Certain Federal Transactions. This provision applies to solicitations expected to exceed $100,000.

(iii) 52.204-3, Taxpayer Identification. This provision applies to solicitations that do not include the clause at 52.204-7, Central Contractor Registration.

(iv) 52.204-5, Women-Owned Business (Other Than Small Business).This provision applies to solicitations that--

(A) Are not set aside for small business concerns;

(B) Exceed the simplified acquisition threshold; and

(C) Are for contracts that will be performed in the United States or its outlying areas.

(v) 52.209-5, Certification Regarding Responsibility Matters. This provision applies to solicitations where the contract value is expected to exceed the simplified acquisition threshold.

(vi) 52.214-14, Place of Performance--Sealed Bidding. This provision applies to invitations for bids except those in which the place of performance is specified by the Government.

(vii) 52.215-6, Place of Performance. This provision applies to solicitations unless the place of performance is specified by the Government.

(viii) 52.219-1, Small Business Program Representations (Basic & Alternate I). This provision applies to solicitations when the contract will be performed in the United States or its outlying areas.

(A) The basic provision applies when the solicitations are issued by other than DoD, NASA, and the Coast Guard.

(B) The provision with its Alternate I applies to solicitations issued by DoD, NASA, or the Coast Guard.

(ix) 52.219-2, Equal Low Bids. This provision applies to solicitations when contracting by sealed bidding and the contract will be performed in the United States or its outlying areas.

(x) 52.222-22, Previous Contracts and Compliance Reports. This provision applies to solicitations that include the clause at 52.222-26, Equal Opportunity.

(xi) 52.222-25, Affirmative Action Compliance. This provision applies to solicitations, other than those for construction, when the solicitation includes the clause at 52.222-26, Equal Opportunity.

(xii) 52.222-38, Compliance with Veterans' Employment Reporting Requirements. This provision applies to solicitations when it is anticipated the contract award will exceed the simplified acquisition threshold and the contract is not for acquisition of commercial items.

(xiii) 52.223-1, Biobased Product Certification. This provision applies to solicitations that require the delivery or specify the use of USDA-designated items; or include the clause at 52.223-2, Affirmative Procurement of Biobased Products Under Service and Construction Contracts.

(xiv) 52.223-4, Recovered Material Certification. This provision applies to solicitations that are for, or specify the use of, EPA-designated items.

(xv) 52.225-2, Buy American Act Certificate. This provision applies to solicitations containing the clause at 52.225-1.

(xvi) 52.225-4, Buy American Act--Free Trade Agreements—Israeli Trade Act Certificate. (Basic, Alternate I, and Alternate II) This provision applies to solicitations containing the clause at 52.225-3.

(A) If the acquisition value is less than $25,000, the basic provision applies.

(B) If the acquisition value is $25,000 or more but is less than $50,000, the provision with its Alternate I applies.

(C) If the acquisition value is $50,000 or more but is less than $67,826, the provision with its Alternate II applies.

(xvii) 52.225-6, Trade Agreements Certificate. This provision applies to solicitations containing the clause at 52.225-5.

(xviii) 52.225-20, Prohibition on Conducting Restricted Business Operations in Sudan--Certification.

(xix) 52.226-2, Historically Black College or University and Minority Institution Representation. This provision applies to--

(A) Solicitations for research, studies, supplies, or services of the type normally acquired from higher educational institutions; and

(B) For DoD, NASA, and Coast Guard acquisitions, solicitations that contain the clause at 52.219-23, Notice of Price Evaluation Adjustment for Small Disadvantaged Business Concerns.

(2) The following certifications are applicable as indicated by the Contracting Officer:

(Contracting Officer check as appropriate.)

----(i) 52.219-19, Small Business Concern Representation for the Small Business Competitiveness Demonstration Program.

------(ii) 52.219-21, Small Business Size Representation for Targeted Industry Categories Under the Small Business Competitiveness Demonstration Program.

------(iii) 52.219-22, Small Disadvantaged Business Status.

------(A) Basic.

------(B) Alternate I.

------(iv) 52.222-18, Certification Regarding Knowledge of Child Labor for Listed End Products.

------(v) 52.222-48, Exemption from Application of the Service Contract Act to Contracts for Maintenance, Calibration, or Repair of Certain Equipment Certification.

------(vi) 52.222-52 Exemption from Application of the Service Contract Act to Contracts for Certain Services--Certification.

------(vii) 52.223-9, with its Alternate I, Estimate of Percentage of Recovered Material Content for EPA-Designated Products (Alternate I only).

------(viii) 52.223-13, Certification of Toxic Chemical Release Reporting.

------(ix) 52.227-6, Royalty Information.

------ (A) Basic.

------ (B) Alternate I.

------(x) 52.227-15, Representation of Limited Rights Data and Restricted Computer Software.

(d) The offeror has completed the annual representations and certifications electronically via the Online Representations and Certifications Application (ORCA) website at http://orca.bpn.gov. After reviewing the ORCA database information, the offeror verifies by submission of the offer that the representations and certifications currently posted electronically that apply to this solicitation as indicated in paragraph (c) of this provision have been entered or updated within the last 12 months, are current, accurate, complete, and applicable to this solicitation (including the business size standard applicable to the NAICS code referenced for this solicitation), as of the date of this offer and are incorporated in this offer by reference (see FAR 4.1201); except for the changes identified below (offeror to insert changes, identifyingchange by clause number, title, date). These amended

representation(s) and/or certification(s) are also incorporated in this offer and are current, accurate, and complete as of the date of this offer.

FAR Clause	Title	Date	Change

Any changes provided by the offeror are applicable to this solicitation only, and do not result in an update to the representations and certifications posted on ORCA.

(End of Provision)

52.209-5 CERTIFICATION REGARDING RESPONSIBILITY MATTERS (DEC 2008)

(a)(1) The Offeror certifies, to the best of its knowledge and belief, that-

(i) The Offeror and/or any of its Principals-

(A) Are ( ) are not ( ) presently debarred, suspended, proposed for debarment, or declared ineligible for the award of contracts by any Federal agency;

(B) Have ( ) have not ( ), within a three-year period preceding this offer, been convicted of or had a civil judgment rendered against them for: commission of fraud or a criminal offense in connection with obtaining, attempting to obtain, or performing a public (Federal, state, or local) contract or subcontract; violation of Federal or state antitrust statutes relating to the submission of offers; or commission of embezzlement, theft, forgery, bribery, falsification or destruction of records, making false statements, tax evasion, violating Federal criminal tax laws, or receiving stolen property; and

(C) Are ( ) are not ( ) presently indicted for, or otherwise criminally or civilly charged by a governmental entity with, commission of any of the offenses enumerated in paragraph (a)(1)(i)(B) of this provision.; and

(D) Have [ballot], have not [ballot], within a three-year period preceding this offer, been notified of any delinquent Federal taxes in an amount that exceeds $3,000 for which the liability remains unsatisfied.

(1) Federal taxes are considered delinquent if both of the following criteria apply:

(i) The tax liability is finally determined. The liability is finally determined if it has been assessed. A liability is not finally determined if there is a pending administrative or judicial challenge. In the case of a judicial challenge to the liability, the liability is not finally determined until all judicial appeal rights have been exhausted.

(ii) The taxpayer is delinquent in making payment. A taxpayer is delinquent if the taxpayer has failed to pay the tax liability when full payment was due and required. A taxpayer is not delinquent in cases where enforced collection action is precluded.

(2) Examples. (i) The taxpayer has received a statutory notice of deficiency, under I.R.C. Sec. 6212, which entitles the taxpayer to seek Tax Court review of a proposed tax deficiency. This is not a delinquent tax because it is not a final tax liability. Should the taxpayer seek Tax Court review, this will not be a final tax liability until the taxpayer has exercised all judicial appeal rights.

(ii) The IRS has filed a notice of Federal tax lien with respect to an assessed tax liability, and the taxpayer has been issued a notice under I.R.C. Sec. 6320 entitling the taxpayer to request a hearing with the IRS Office of Appeals contesting the lien filing, and to further appeal to the Tax Court if the IRS determines to sustain the lien filing. In the course of the hearing, the taxpayer is entitled to contest the underlying tax liability because the taxpayer has had no prior opportunity to contest the liability. This is not a delinquent tax because it is not a final tax liability. Should the taxpayer seek tax court review, this will not be a final tax liability until the taxpayer has exercised all judicial appeal rights.

(iii) The taxpayer has entered into an installment agreement pursuant to I.R.C. Sec. 6159. The taxpayer is making timely payments and is in full compliance with the agreement terms. The taxpayer is not delinquent because the taxpayer is not currently required to make full payment.

(iv) The taxpayer has filed for bankruptcy protection. The taxpayer is not delinquent because enforced collection action is stayed under 11 U.S.C. 362 (the Bankruptcy Code).

(ii) The Offeror has ( ) has not ( ), within a three-year period preceding this offer, had one or more contracts terminated for default by any Federal agency.

(2) Principal, for the purposes of this certification, means an officer, director, owner, partner, or a person having primary management or supervisory responsibilities within a business entity (e.g., general manager; plant manager; head of a subsidiary, division, or business segment; and similar positions).

(b) The Offeror shall provide immediate written notice to the Contracting Officer if, at any time prior to contract award, the Offeror learns that its certification was erroneous when submitted or has become erroneous by reason of changed circumstances.

(c) A certification that any of the items in paragraph (a) of this provision exists will not necessarily result in withholding of an award under this solicitation. However, the certification will be considered in connection with a determination of the Offeror's responsibility. Failure of the Offeror to furnish a certification or provide such additional information as requested by the Contracting Officer may render the Offeror nonresponsible.

(d) Nothing contained in the foregoing shall be construed to require establishment of a system of records in order to render, in good faith, the certification required by paragraph (a) of this provision. The knowledge and information of an Offeror is not required to exceed that which is normally possessed by a prudent person in the ordinary course of business dealings.

(e) The certification in paragraph (a) of this provision is a material representation of fact upon which reliance was placed when making award. If it is later determined that the Offeror knowingly rendered an erroneous certification, in addition to other remedies available to the Government, the Contracting Officer may terminate the contract resulting from this solicitation for default.

(End of provision)

AI CLAUSES

AI 26.6 Projected Afghan and Third Country National (TCN) Employment (5 Nov 07)

Projected Afghan Employment

Collecting & Reporting Employment Statistics

The purpose of this clause is to collect data on the projected number of Afghans employed for the term of the contract. Offerors are required to identify in the space provided below the total projected number that will be directly employed in the performance of this contract.

Employment is the total number of Afghan persons expected to be on the payroll (contractors, subcontractors, & sub-subcontractors) emp1oyed full or part time who received pay for my part of the term of the contract. Temporary and intermittent employees are included, as are any workers who are on paid sick leave, on paid holiday, R&R leave or who work during only part of the pay period." Enter into spaces provided in item #l. Next enter in the spaces provided in item #2 what is the average number employed throughout the term of the contract. Item #3 An "Afghan-Based Company" is a company (including a subsidiary company) whose principal place of business is
located within Afghanistan.

1. Total Afghan (Afghan Residents) Employed:

Afghan: Men _____

Afghan: Females _____

Total: _____

2. Average Afghans (Afghan Residents) Employed:

Afghan: Men _____

Afghan: Females _____

Total: _____

1. Is your company an “Afghan Based" company? Yes ___ No___. If no, what country is your company registered/incorporated: _____

2. Afghan Company Certification. The offeror ____is or ____is not an Iraqi owned firm. If the firm is Afghan owned, the Ministry of Trade registration/license number is: _____.

(End)

Section 00700 - Contract Clauses

CLAUSES INCORPORATED BY REFERENCE

52.202-1	Definitions	JUL 2004
52.203-2	Certificate Of Independent Price Determination	APR 1985
52.203-5	Covenant Against Contingent Fees	APR 1984
52.203-6	Restrictions On Subcontractor Sales To The Government	SEP 2006
52.203-7	Anti-Kickback Procedures	JUL 1995
52.203-10	Price Or Fee Adjustment For Illegal Or Improper Activity	JAN 1997
52.203-12	Limitation On Payments To Influence Certain Federal Transactions	SEP 2007
52.204-4	Printed or Copied Double-Sided on Recycled Paper	AUG 2000
52.209-6	Protecting the Government's Interest When Subcontracting With Contractors Debarred, Suspended, or Proposed for Debarment	SEP 2006
52.215-11	Price Reduction for Defective Cost or Pricing Data--Modifications	OCT 1997
52.215-13	Subcontractor Cost or Pricing Data--Modifications	OCT 1997

52.215-21	Requirements for Cost or Pricing Data or Information Other Than Cost or Pricing Data--Modifications	OCT 1997
52.222-21	Prohibition Of Segregated Facilities	FEB 1999
52.222-26	Equal Opportunity	MAR 2007
52.222-27	Affirmative Action Compliance Requirements for Construction	FEB 1999
52.222-35	Equal Opportunity For Special Disabled Veterans, Veterans of the Vietnam Era, and Other Eligible Veterans	SEP 2006
52.222-36	Affirmative Action For Workers With Disabilities	JUN 1998
52.222-37	Employment Reports On Special Disabled Veterans, Veterans Of The Vietnam Era, and Other Eligible Veterans	SEP 2006
52.222-50	Combating Trafficking in Persons	FEB 2009
52.223-13	Certification of Toxic Chemical Release Reporting	AUG 2003
52.223-14	Toxic Chemical Release Reporting	AUG 2003
52.227-4	Patent Indemnity-Construction Contracts	DEC 2007
52.228-3	Worker's Compensation Insurance (Defense Base Act)	APR 1984
52.229-6	Taxes--Foreign Fixed-Price Contracts	JUN 2003
52.232-5	Payments under Fixed-Price Construction Contracts	SEP 2002
52.232-17	Interest	OCT 2008
52.232-27	Prompt Payment for Construction Contracts	OCT 2008
52.232-38	Submission of Electronic Funds Transfer Information with Offer	MAY 1999
52.233-1	Disputes	JUL 2002
52.233-3	Protest After Award	AUG 1996
52.233-4	Applicable Law for Breach of Contract Claim	OCT 2004
52.236-2	Differing Site Conditions	APR 1984
52.236-3	Site Investigation and Conditions Affecting the Work	APR 1984
52.236-5	Material and Workmanship	APR 1984
52.236-6	Superintendence by the Contractor	APR 1984
52.236-7	Permits and Responsibilities	NOV 1991
52.236-8	Other Contracts	APR 1984
52.236-9	Protection of Existing Vegetation, Structures, Equipment, Utilities, and Improvements	APR 1984
52.236-10	Operations and Storage Areas	APR 1984
52.236-11	Use and Possession Prior to Completion	APR 1984
52.236-12	Cleaning Up	APR 1984
52.236-13 Alt I	Accident Prevention (Nov 1991) - Alternate I	NOV 1991
52.236-15	Schedules for Construction Contracts	APR 1984
52.236-17	Layout of Work	APR 1984
52.236-21 Alt I	Specifications and Drawings for Construction (Feb 1997) - Alternate I	APR 1984
52.236-26	Preconstruction Conference	FEB 1995
52.236-27	Site Visit (Construction)	FEB 1995
52.242-13	Bankruptcy	JUL 1995
52.242-14	Suspension of Work	APR 1984
52.243-4	Changes	JUN 2007
52.244-5	Competition In Subcontracting	DEC 1996
52.246-21	Warranty of Construction	MAR 1994
52.247-34	F.O.B. Destination	NOV 1991
52.247-63	Preference For U.S. Flag Air Carriers	JUN 2003
52.248-3	Value Engineering-Construction	SEP 2006
52.249-2 Alt I	Termination for Convenience of the Government (Fixed-Price) (May 2004) - Alternate I	SEP 1996
52.249-10 Alt I	Default (Fixed-Price Construction) (Apr 1984) Alternate I	APR 1984

52.253-1	Computer Generated Forms	JAN 1991
252.201-7000	Contracting Officer's Representative	DEC 1991
252.203-7001	Prohibition On Persons Convicted of Fraud or Other Defense-Contract-Related Felonies	DEC 2008
252.204-7000	Disclosure Of Information	DEC 1991
252.204-7003	Control Of Government Personnel Work Product	APR 1992
252.209-7004	Subcontracting With Firms That Are Owned or Controlled By The Government of a Terrorist Country	DEC 2006
252.215-7000	Pricing Adjustments	DEC 1991
252.215-7002	Cost Estimating System Requirements	DEC 2006
252.222-7002	Compliance With Local Labor Laws (Overseas)	JUN 1997
252.223-7004	Drug Free Work Force	SEP 1988
252.225-7005	Identification Of Expenditures In The United States	JUN 2005
252.225-7041	Correspondence in English	JUN 1997
252.227-7013	Rights in Technical Data--Noncommercial Items	NOV 1995
252.227-7022	Government Rights (Unlimited)	MAR 1979
252.227-7023	Drawings and Other Data to become Property of Government	MAR 1979
252.227-7030	Technical Data--Withholding Of Payment	MAR 2000
252.227-7033	Rights in Shop Drawings	APR 1966
252.231-7000	Supplemental Cost Principles	DEC 1991
252.232-7003	Electronic Submission of Payment Requests and Receiving Reports	MAR 2008
252.232-7008	Assignment of Claims (Overseas)	JUN 1997
252.232-7010	Levies on Contract Payments	DEC 2006
252.233-7001	Choice of Law (Overseas)	JUN 1997
252.236-7000	Modification Proposals-Price Breakdown	DEC 1991
252.236-7001	Contract Drawings, and Specifications	AUG 2000
252.236-7008	Contract Prices-Bidding Schedules	DEC 1991
252.243-7001	Pricing Of Contract Modifications	DEC 1991
252.243-7002	Requests for Equitable Adjustment	MAR 1998
252.247-7023	Transportation of Supplies by Sea	MAY 2002
252.247-7024	Notification Of Transportation Of Supplies By Sea	MAR 2000

CLAUSES INCORPORATED BY FULL TEXT

52.215-19 NOTIFICATION OF OWNERSHIP CHANGES (OCT 1997)

(a) The Contractor shall make the following notifications in writing:

(1) When the Contractor becomes aware that a change in its ownership has occurred, or is certain to occur, that could result in changes in the valuation of its capitalized assets in the accounting records, the Contractor shall notify the Administrative Contracting Officer (ACO) within 30 days.

(2) The Contractor shall also notify the ACO within 30 days whenever changes to asset valuations or any other cost changes have occurred or are certain to occur as a result of a change in ownership.

(b) The Contractor shall--

(1) Maintain current, accurate, and complete inventory records of assets and their costs;

(2) Provide the ACO or designated representative ready access to the records upon request;

(3) Ensure that all individual and grouped assets, their capitalized values, accumulated depreciation or amortization, and remaining useful lives are identified accurately before and after each of the Contractor's ownership changes; and

(4) Retain and continue to maintain depreciation and amortization schedules based on the asset records maintained before each Contractor ownership change.

The Contractor shall include the substance of this clause in all subcontracts under this contract that meet the applicability requirement of FAR 15.408(k).

(End of clause)

CLAUSES INCORPORATED BY FULL TEXT

52.222-29 NOTIFICATION OF VISA DENIAL (JUN 2003)

It is a violation of Executive Order 11246 for a Contractor to refuse to employ any applicant or not to assign any person hired in the United States, Puerto Rico, the Northern Mariana Islands, American Samoa, Guam, the U.S. Virgin Islands, or Wake Island, on the basis that the individual's race, color, religion, sex, or national origin is not compatible with the policies of the country where or for whom the work will be performed (41 CFR 60-1.10). The Contractor shall notify the U.S. Department of State, Assistant Secretary, Bureau of Political-Military Affairs (PM), 2201 C Street NW., Room 6212, Washington, DC 20520, and the U.S. Department of Labor, Deputy Assistant Secretary for Federal Contract Compliance, when it has knowledge of any employee or potential employee being denied an entry visa to a country where this contract will be performed, and it believes the denial is attributable to the race, color, religion, sex, or national origin of the employee or potential employee.

(End of clause)

CLAUSES INCORPORATED BY FULL TEXT

52.232-34 PAYMENT BY ELECTRONIC FUNDS TRANSFER—OTHER THAN CENTRAL CONTRACTOR REGISTRATION (MAY 1999)

(a) Method of payment. (1) All payments by the Government under this contract shall be made by electronic funds transfer (EFT) except as provided in paragraph (a)(2) of this clause. As used in this clause, the term “EFT” refers to the funds transfer and may also include the payment information transfer.

(2) In the event the Government is unable to release one or more payments by EFT, the Contractor agrees to either--

(i) Accept payment by check or some other mutually agreeable method of payment; or

(ii) Request the Government to extend payment due dates until such time as the Government makes payment by EFT (but see paragraph (d) of this clause).

(b) Mandatory submission of Contractor's EFT information. (1) The Contractor is required to provide the Government with the information required to make payment by EFT (see paragraph (j) of this clause). The Contractor shall provide this information directly to the office designated in this contract to receive that

information (hereafter: “designated office”") by (the Contracting Officer shall insert date, days after award, days before first request, the date specified for receipt of offers if the provision at 52.232-38 is utilized, or “concurrent with first request” as prescribed by the head of the agency; if not prescribed, insert “no later than 15 days prior to submission of the first request for payment”). If not otherwise specified in this contract, the payment office is the designated office for receipt of the Contractor's EFT information. If more than one designated office is named for the contract, the Contractor shall provide a separate notice to each office. In the event that the EFT information changes, the Contractor shall be responsible for providing the updated information to the designated office(s).

(2) If the Contractor provides EFT information applicable to multiple contracts, the Contractor shall specifically state the applicability of this EFT information in terms acceptable to the designated office. However, EFT information supplied to a designated office shall be applicable only to contracts that identify that designated office as the office to receive EFT information for that contract.

(c) Mechanisms for EFT payment. The Government may make payment by EFT through either the Automated Clearing House (ACH) network, subject to the rules of the National Automated Clearing House Association, or the Fedwire Transfer System. The rules governing Federal payments through the ACH are contained in 31 CFR part 210.

(d) Suspension of payment. (1) The Government is not required to make any payment under this contract until after receipt, by the designated office, of the correct EFT payment information from the Contractor. Until receipt of the correct EFT information, any invoice or contract financing request shall be deemed not to be a proper invoice for the purpose of prompt payment under this contract. The prompt payment terms of the contract regarding notice of an improper invoice and delays in accrual of interest penalties apply.

(2) If the EFT information changes after submission of correct EFT information, the Government shall begin using the changed EFT information no later than 30 days after its receipt by the designated office to the extent payment is made by EFT. However, the Contractor may request that no further payments be made until the updated EFT information is implemented by the payment office. If such suspension would result in a late payment under the prompt payment terms of this contract, the Contractor's request for suspension shall extend the due date for payment by the number of days of the suspension.

(e) Liability for uncompleted or erroneous transfers. (1) If an uncompleted or erroneous transfer occurs because the Government used the Contractor's EFT information incorrectly, the Government remains responsible for--

(i) Making a correct payment;

(ii) Paying any prompt payment penalty due; and

(iii) Recovering any erroneously directed funds.

(2) If an uncompleted or erroneous transfer occurs because the Contractor's EFT information was incorrect, or was revised within 30 days of Government release of the EFT payment transaction instruction to the Federal Reserve System, and--

(i) If the funds are no longer under the control of the payment office, the Government is deemed to have made payment and the Contractor is responsible for recovery of any erroneously directed funds; or

(ii) If the funds remain under the control of the payment office, the Government shall not make payment and the provisions of paragraph (d) shall apply.

(f) EFT and prompt payment. A payment shall be deemed to have been made in a timely manner in accordance with the prompt payment terms of this contract if, in the EFT payment transaction instruction released to the Federal Reserve System, the date specified for settlement of the payment is on or before the prompt payment due date, provided the specified payment date is a valid date under the rules of the Federal Reserve System.

(g) EFT and assignment of claims. If the Contractor assigns the proceeds of this contract as provided for in the assignment of claims terms of this contract, the Contractor shall require as a condition of any such assignment, that the assignee shall provide the EFT information required by paragraph (j) of this clause to the designated office, and shall be paid by EFT in accordance with the terms of this clause. In all respects, the requirements of this clause shall apply to the assignee as if it were the Contractor. EFT information that shows the ultimate recipient of the transfer to be other than the Contractor, in the absence of a proper assignment of claims acceptable to the Government, is incorrect EFT information within the meaning of paragraph (d) of this clause.

(h) Liability for change of EFT information by financial agent. The Government is not liable for errors resulting from changes to EFT information provided by the Contractor's financial agent.

(i) Payment information. The payment or disbursing office shall forward to the Contractor available payment information that is suitable for transmission as of the date of release of the EFT instruction to the Federal Reserve System. The Government may request the Contractor to designate a desired format and method(s) for delivery of payment information from a list of formats and methods the payment office is capable of executing. However, the Government does not guarantee that any particular format or method of delivery is available at any particular payment office and retains the latitude to use the format and delivery method most convenient to the Government. If the Government makes payment by check in accordance with paragraph (a) of this clause, the Government shall mail the payment information to the remittance address in the contract.

(j) EFT information. The Contractor shall provide the following information to the designated office. The Contractor may supply this data for this or multiple contracts (see paragraph (b) of this clause). The Contractor shall designate a single financial agent per contract capable of receiving and processing the EFT information using the EFT methods described in paragraph (c) of this clause.

(1) The contract number (or other procurement identification number).

(2) The Contractor's name and remittance address, as stated in the contract(s).

(3) The signature (manual or electronic, as appropriate), title, and telephone number of the Contractor official authorized to provide this information.

(4) The name, address, and 9-digit Routing Transit Number of the Contractor's financial agent.

(5) The Contractor's account number and the type of account (checking, saving, or lockbox).

(6) If applicable, the Fedwire Transfer System telegraphic abbreviation of the Contractor's financial agent.

(7) If applicable, the Contractor shall also provide the name, address, telegraphic abbreviation, and 9-digit Routing Transit Number of the correspondent financial institution receiving the wire transfer payment if the Contractor's financial agent is not directly on-line to the Fedwire Transfer System; and, therefore, not the receiver of the wire transfer payment.

(End of clause)

CLAUSES INCORPORATED BY FULL TEXT

52.236-1 PERFORMANCE OF WORK BY THE CONTRACTOR (APR 1984)

The Contractor shall perform on the site, and with its own organization, work equivalent to at least 15 percent of the total amount of work to be performed under the contract. This percentage may be reduced by a supplemental

agreement to this contract if, during performing the work, the Contractor requests a reduction and the Contracting Officer determines that the reduction would be to the advantage of the Government.

(End of clause)

52.249-5000 BASIS FOR SETTLEMENT OF PROPOSALS

Actual costs will be used to determine equipment costs for a settlement proposal submitted on the total cost basis under FAR 49.06-2(b). In evaluating a termination settlement proposal using the total cost basis, the following principles will be applied to determine allowable equipment costs:

(1) Actual costs for each piece of equipment, or groups of similar serial or series equipment, need not be available in the contractor's accounting records to determine total actual equipment costs.
(2) If equipment costs have been allocated to a contract using predetermined rates, those charges will be adjusted to actual costs.
(3) Record job costs adjusted for unallowable expenses will be used to determine equipment operating expenses.
(4) Ownership costs (depreciation) will be determined using the contractor's depreciation schedule (subject to the provisions of FAR 31.205-11).
(5) License, taxes, storage and insurance costs are normally recovered as an indirect expense and unless the contractor charges these costs directly to contracts, they will be recovered through the indirect expense rate.

(End of Clause)

CLAUSES INCORPORATED BY FULL TEXT

52.252-2 CLAUSES INCORPORATED BY REFERENCE (FEB 1998)

This contract incorporates one or more clauses by reference, with the same force and effect as if they were given in full text. Upon request, the Contracting Officer will make their full text available. Also, the full text of a clause may be accessed electronically at this/these address(es):

www.arnet.gov
www.farsite.hill.af.mil

(End of clause)

CLAUSES INCORPORATED BY FULL TEXT

252.204-7004 CENTRAL CONTRACTOR REGISTRATION (52.204-7) ALTERNATE A (SEP 2007)

(a) Definitions. As used in this clause--

"Central Contractor Registration (CCR) database" means the primary Government repository for contractor information required for the conduct of business with the Government.

“Commercial and Government Entity (CAGE) code” means--

(1) A code assigned by the Defense Logistics Information Service (DLIS) to identify a commercial or Government entity; or

(2) A code assigned by a member of the North Atlantic Treaty Organization that DLIS records and maintains in the CAGE master file. This type of code is known as an “NCAGE code.”

“Data Universal Numbering System (DUNS) number” means the 9-digit number assigned by Dun and Bradstreet, Inc. (D&B) to identify unique business entities.

“Data Universal Numbering System +4 (DUNS+4) number” means the DUNS number assigned by D&B plus a 4-character suffix that may be assigned by a business concern. (D&B has no affiliation with this 4-character suffix.) This 4-character suffix may be assigned at the discretion of the business concern to establish additional CCR records for identifying alternative Electronic Funds Transfer (EFT) accounts (see Subpart 32.11 of the Federal Acquisition Regulation) for the same parent concern.

“Registered in the CCR database” means that--

(1) The Contractor has entered all mandatory information, including the DUNS number or the DUNS+4 number, into the CCR database;

(2) The Contractor's CAGE code is in the CCR database; and

(3) The Government has validated all mandatory data fields, to include validation of the Taxpayer Identification Number (TIN) with the Internal Revenue Service, and has marked the records ``Active." The Contractor will be required to provide consent for TIN validation to the Government as part of the CCR registration process.

(b)(1) By submission of an offer, the offeror acknowledges the requirement that a prospective awardee shall be registered in the CCR database prior to award, during performance, and through final payment of any contract, basic agreement, basic ordering agreement, or blanket purchasing agreement resulting from this solicitation.

(2) The offeror shall enter, in the block with its name and address on the cover page of its offer, the annotation "DUNS" or "DUNS +4" followed by the DUNS or DUNS +4 number that identifies the offeror's name and address exactly as stated in the offer. The DUNS number will be used by the Contracting Officer to verify that the offeror is registered in the CCR database.

(c) If the offeror does not have a DUNS number, it should contact Dun and Bradstreet directly to obtain one.

(1) An offeror may obtain a DUNS number-

(i) If located within the United States, by calling Dun and Bradstreet at 1-866-705-5711 or via the Internet at http://www.dnb.com; or

(ii) If located outside the United States, by contacting the local Dun and Bradstreet office.

(2) The offeror should be prepared to provide the following information:

(i) Company legal business.

(ii) Tradestyle, doing business, or other name by which your entity is commonly recognized.

(iii) Company Physical Street Address, City, State, and Zip Code.

(iv) Company Mailing Address, City, State and Zip Code (if separate from physical).

(v) Company Telephone Number.

(vi) Date the company was started.

(vii) Number of employees at your location.

(viii) Chief executive officer/key manager.

(ix) Line of business (industry).

(x) Company Headquarters name and address (reporting relationship within your entity).

(d) If the Offeror does not become registered in the CCR database in the time prescribed by the Contracting Officer, the Contracting Officer will proceed to award to the next otherwise successful registered Offeror.

(e) Processing time, which normally takes 48 hours, should be taken into consideration when registering. Offerors who are not registered should consider applying for registration immediately upon receipt of this solicitation.

(f) The Contractor is responsible for the accuracy and completeness of the data within the CCR database, and for any liability resulting from the Government's reliance on inaccurate or incomplete data. To remain registered in the CCR database after the initial registration, the Contractor is required to review and update on an annual basis from the date of initial registration or subsequent updates its information in the CCR database to ensure it is current, accurate and complete. Updating information in the CCR does not alter the terms and conditions of this contract and is not a substitute for a properly executed contractual document.

(g)
(1)
(i) If a Contractor has legally changed its business name, "doing business as" name, or division name (whichever is shown on the contract), or has transferred the assets used in performing the contract, but has not completed the necessary requirements regarding novation and change-of-name agreements in Subpart 42.12, the Contractor shall provide the responsible Contracting Officer a minimum of one business day's written notification of its intention to (A) change the name in the CCR database; (B) comply with the requirements of Subpart 42.12 of the FAR; and (C) agree in writing to the timeline and procedures specified by the responsible Contracting Officer. The Contractor must provide with the notification sufficient documentation to support the legally changed name.

(ii) If the Contractor fails to comply with the requirements of paragraph (g)(1)(i) of this clause, or fails to perform the agreement at paragraph (g)(1)(i)(C) of this clause, and, in the absence of a properly executed novation or change-of-name agreement, the CCR information that shows the Contractor to be other than the Contractor indicated in the contract will be considered to be incorrect information within the meaning of the "Suspension of Payment" paragraph of the electronic funds transfer (EFT) clause of this contract.

(2) The Contractor shall not change the name or address for EFT payments or manual payments, as appropriate, in the CCR record to reflect an assignee for the purpose of assignment of claims (see FAR Subpart 32.8, Assignment of Claims). Assignees shall be separately registered in the CCR database. Information provided to the Contractor's CCR record that indicates payments, including those made by EFT, to an ultimate recipient other than that Contractor will be considered to be incorrect information within the meaning of the "Suspension of payment" paragraph of the EFT clause of this contract.

(h) Offerors and Contractors may obtain information on registration and annual confirmation requirements via the internet at http://www.ccr.gov or by calling 1-888-227-2423, or 269-961-5757.

(End of clause)

CLAUSES INCORPORATED BY FULL TEXT

252.225-7043 ANTITERRORISM/FORCE PROTECTION POLICY FOR DEFENSE CONTRACTORS OUTSIDE THE UNITED STATES (MAR 2006)

(a) Definition. United States, as used in this clause, means, the 50 States, the District of Columbia, and outlying areas.

(b) Except as provided in paragraph (c) of this clause, the Contractor and its subcontractors, if performing or traveling outside the United States under this contract, shall--

(1) Affiliate with the Overseas Security Advisory Council, if the Contractor or subcontractor is a U.S. entity;

(2) Ensure that Contractor and subcontractor personnel who are U.S. nationals and are in-country on a non-transitory basis, register with the U.S. Embassy, and that Contractor and subcontractor personnel who are third country nationals comply with any security related requirements of the Embassy of their nationality;

(3) Provide, to Contractor and subcontractor personnel, antiterrorism/force protection awareness information commensurate with that which the Department of Defense (DoD) provides to its military and civilian personnel and their families, to the extent such information can be made available prior to travel outside the United States; and

(4) Obtain and comply with the most current antiterrorism/force protection guidance for Contractor and subcontractor personnel.

(c) The requirements of this clause do not apply to any subcontractor that is--

(1) A foreign government;

(2) A representative of a foreign government; or

(3) A foreign corporation wholly owned by a foreign government.

(d) Information and guidance pertaining to DoD antiterrorism/force protection can be obtained from [Contracting Officer to insert applicable information cited in PGI 225.7403-1].

(End of clause)

CLAUSES INCORPORATED BY FULL TEXT

252.225-7045 BALANCE OF PAYMENTS PROGRAM--CONSTRUCTION MATERIAL UNDER TRADE AGREEMENTS (JAN 2009)

(a) Definitions. As used in this clause--

Caribbean Basin country construction material means a construction material that---

(1) Is wholly the growth, product, or manufacture of a Caribbean Basin country; or

(2) In the case of a construction material that consists in whole or in part of materials from another country, has been substantially transformed in a Caribbean Basin country into a new and different construction material distinct from the materials from which it was transformed.

Commercially available off-the-shelf (COTS) item--

(1) Means any item of supply (including construction material) that is--

(i) A commercial item (as defined in paragraph (1) of the definition of ``commercial item'' in section 2.101 of the Federal Acquisition Regulation);

(ii) Sold in substantial quantities in the commercial marketplace; and

(iii) Offered to the Government, under a contract or subcontract at any tier, without modification, in the same form in which it is sold in the commercial marketplace; and

(2) Does not include bulk cargo, as defined in section 3 of the Shipping Act of 1984 (46 U.S.C. 40102), such as agricultural products and petroleum products.

Component means any article, material, or supply incorporated directly into construction material.

Construction material means an article, material, or supply brought to the construction site by the Contractor or a subcontractor for incorporation into the building or work. The term also includes an item brought to the site preassembled from articles, materials, or supplies. However, emergency life safety systems, such as emergency lighting, fire alarm, and audio evacuation systems, that are discrete systems incorporated into a public building or work and that are produced as complete systems, are evaluated as a single and distinct construction material regardless of when or how the individual parts or components of those systems are delivered to the construction site. Materials purchased directly by the Government are supplies, not construction material.

Cost of components means--

(1) For components purchased by the Contractor, the acquisition cost, including transportation costs to the place of incorporation into the end product (whether or not such costs are paid to a domestic firm), and any applicable duty (whether or not a duty-free entry certificate is issued); or

(2) For components manufactured by the Contractor, all costs associated with the manufacture of the component, including transportation costs as described in paragraph (1) of this definition, plus allocable overhead costs, but excluding profit. Cost of components does not include any costs associated with the manufacture of the construction material.

Designated country means--

(1) A World Trade Organization Government Procurement Agreement (WTO GPA) country (Aruba, Austria, Belgium, Bulgaria, Canada, Cyprus, Czech Republic, Denmark, Estonia, Finland, France, Germany, Greece, Hong Kong, Hungary, Iceland, Ireland, Israel, Italy, Japan, Korea (Republic of), Latvia, Liechtenstein, Lithuania, Luxembourg, Malta, Netherlands, Norway, Poland, Portugal, Romania, Singapore, Slovak Republic, Slovenia, Spain, Sweden, Switzerland, or the United Kingdom);

(2) A Free Trade Agreement country (Australia, Bahrain, Canada, Chile, Dominican Republic, El Salvador, Guatemala, Honduras, Mexico, Morocco, Nicaragua, or Singapore);

(3) A least developed country (Afghanistan, Angola, Bangladesh, Benin, Bhutan, Burkina Faso, Burundi, Cambodia, Central African Republic, Chad, Comoros, Democratic Republic of Congo, Djibouti, East Timor, Equatorial Guinea, Eritrea, Ethiopia, Gambia, Guinea, Guinea-Bissau, Haiti, Kiribati, Laos, Lesotho, Liberia, Madagascar, Malawi, Maldives, Mali, Mauritania, Mozambique, Nepal, Niger, Rwanda, Samoa, Sao Tome and Principe, Senegal, Sierra Leone, Solomon Islands, Somalia, Tanzania, Togo, Tuvalu, Uganda, Vanuatu, Yemen, or Zambia); or

(4) A Caribbean Basin country (Antigua and Barbuda, Aruba, Bahamas, Barbados, Belize, British Virgin Islands, Costa Rica, Dominica, Grenada, Guyana, Haiti, Jamaica, Montserrat, Netherlands Antilles, St. Kitts and Nevis, St. Lucia, St. Vincent and the Grenadines, or Trinidad and Tobago).

Designated country construction material means a construction material that is a WTO GPA country construction material, a Free Trade Agreement country construction material, a least developed country construction material, or a Caribbean Basin country construction material.

Domestic construction material means--

(1) An unmanufactured construction material mined or produced in the United States; or

(2) A construction material manufactured in the United States, if--

(i) The cost of its components mined, produced, or manufactured in the United States exceeds 50 percent of the cost of all its components. Components of foreign origin of the same class or kind for which nonavailability determinations have been made are treated as domestic; or

(ii) The construction material is a COTS item.

Free Trade Agreement country construction material means a construction material that--

(1) Is wholly the growth, product, or manufacture of a Free Trade Agreement country; or

(2) In the case of a construction material that consists in whole or in part of materials from another country, has been substantially transformed in a Free Trade Agreement country into a new and different construction material distinct from the material from which it was transformed.

Least developed country construction material means a construction material that--

(1) Is wholly the growth, product, or manufacture of a least developed country; or

(2) In the case of a construction material that consists in whole or in part of materials from another country has been substantially transformed in a least developed country into a new and different construction material distinct from the materials from which it was transformed.

United States means the 50 States, the District of Columbia, and outlying areas.

WTO GPA country construction material means a construction material that--

(1) Is wholly the growth, product, or manufacture of a WTO GPA country; or

(2) In the case of a construction material that consists in whole or in part of materials from another country, has been substantially transformed in a WTO GPA country into a new and different construction material distinct from the materials from which it was transformed.

(b) This clause implements the Balance of Payments Program by providing a preference for domestic construction material. In addition, the Contracting Officer has determined that the WTO GPA and Free Trade Agreements apply to this acquisition. Therefore, the Balance of Payments Program restrictions are waived for designated country construction materials.

(c) The Contractor shall use only domestic or designated country construction material in performing this contract, except for--

(1) Construction material valued at or below the simplified acquisition threshold in part 2 of the Federal Acquisition Regulation; or

(2) The construction material or components listed by the Government as follows:

Sand, cement asphalt, gravel and other soil materials, stone, concrete masonry units, fired brick, Reinforcing steel, electrical materials, gypsum, wall board, roofing materials, paint, valves, floor tiles, Acoustical ceiling, panels, other systems, steel joist, miscellaneous metal and building insulations.

(End of clause)

CLAUSES INCORPORATED BY FULL TEXT

252.229-7000 INVOICES EXCLUSIVE OF TAXES OR DUTIES (JUNE 1997)

Invoices submitted in accordance with the terms and conditions of this contract shall be exclusive of all taxes or duties for which relief is available.

(End of clause)

CLAUSES INCORPORATED BY FULL TEXT

252.229-7001 TAX RELIEF (JUN 1997)

(a) Prices set forth in this contract are exclusive of all taxes and duties from which the United States Government is exempt by virtue of tax agreements between the United States Government and the Contractor's government. The following taxes or duties have been excluded from the contract price:

Reference the exchange of diplomatic notes between the usa and Afghanistan dated September 26, 2002, Dec 12, 2002 and May 28, 2003: and/or successor notes or agreements as applicable.

NAME OF TAX: (Offeror Insert) RATE (PERCENTAGE): (Offeror Insert)

(b) The Contractor's invoice shall list separately the gross price, amount of tax deducted, and net price charged.

(c) When items manufactured to United States Government specifications are being acquired, the Contractor shall identify the materials or components intended to be imported in order to ensure that relief from import duties is obtained. If the Contractor intends to use imported products from inventories on hand, the price of which includes a factor for import duties, the Contractor shall ensure the United States Government's exemption from these taxes. The Contractor may obtain a refund of the import duties from its government or request the duty-free import of an amount of supplies or components corresponding to that used from inventory for this contract.

(End of clause)

AI CLAUSES SECTION 0700
AI 22.1705-100
PROHIBITION AGAINST HUMAN TRAFFICKING, INHUMANE LIVING

CONDITIONS, AND WITHHOLDING OF EMPLOYEE PASSPORTS
(MAR 2009)

(a) All contractors ("contractors" refers to both prime contractors and all subcontractors at all tiers) are reminded of the prohibition contained in Title 18, United States Code, Section 1592, against knowingly destroying, concealing, removing, confiscating, or possessing any actual or purported passport or other immigration document, or any other actual or purported government identification document, of another person, to prevent or restrict or to attempt to prevent or restrict, without lawful authority, the person's liberty to move or travel, in order to maintain the labor or services of that person, when the person is or has been a victim of a severe form of trafficking in persons.

(b) Contractors are also required to comply with the following provisions:
(1) Contractors shall only hold employee passports and other identification documents discussed above for the shortest period of time reasonable for administrative processing purposes.
(2) Contractors shall provide all employees with a signed copy of their employment contract, in English as well as the employee's native language that defines the terms of their employment/compensation.
(3) Contractors shall not utilize unlicensed recruiting firms, or firms that charge illegal recruiting fees.
(4) Contractors shall be required to provide adequate living conditions (sanitation, health, safety, living space) for their employees. Fifty square feet is the minimum acceptable square footage of personal living space per employee. Upon contractor's written request, contracting officers may grant a waiver in writing in cases where the existing square footage is within 20% of the minimum, and the overall conditions are determined by the contracting officer to be acceptable. A copy of the waiver approval shall be maintained at the respective life support area.
(5) Contractors shall incorporate checks of life support areas to ensure compliance with the requirements of this Trafficking in Persons Prohibition into their Quality Control program, which will be reviewed within the Government's Quality Assurance process.
(6) Contractors shall comply with international laws regarding transit/exit/entry procedures, and the requirements for work visas. Contractors shall follow all Host Country entry and exit requirements.
(c) Contractors have an affirmative duty to advise the Contracting Officer if they learn of their employees violating the human trafficking and inhumane living conditions provisions contained herein. Contractors are advised that contracting officers and/or their representatives will conduct random checks to ensure contractors and subcontractors at all tiers are adhering to the law on human trafficking, humane living conditions and withholding of passports.
(d) The contractor agrees to incorporate the substance of this clause, including this paragraph, in all subcontracts under his contract.

(End of Requirement)

AI 23.1000-100
REPORTING KIDNAPPINGS, SERIOUS INJURIES AND DEATHS
(MAR 2009)

Contractors shall notify the Contracting Officer, as soon as practicable, whenever employee kidnappings, serious injuries or deaths occur.
Report the following information:

Contract Number:

Contract Description & Location:
Company Name:
Reporting party:
Name:
Phone number:
e-mail address:
Victim:
Name:
Gender (Male/Female):
Age:
Nationality:
Country of permanent residence:
Incident:
Description:
Location:
Date and time:
Other Pertinent Information:

(End of Requirement)

AI 25.1103-101
ARMING REQUIREMENTS AND PROCEDURES FOR PERSONAL SECURITY SERVICES CONTRACTORS AND FOR REQUESTS FOR PERSONAL PROTECTION
(MAR 2009)

General. Contractor and its subcontractors at all tiers that require arming under this contract agree to obey all laws, regulations, orders, and directives applicable to the use of private security personnel in Iraq and Afghanistan, including U.S. CENTCOM, Multi-National Force Commander and Multi-National Corps Commander orders, instructions and directives. Contractors will ensure that all employees, including employees at any tier of subcontracting relationships, armed under the provisions of this contract, comply with the contents of this clause and with the requirements set forth in the following:
DODI 3020.41, *Program Management for Acquisition and Operational Contract Support in Contingency Operations*;
DFARS 252.225-7040, *Contractor Personnel Supporting a Force Deployed Outside the United States*;
Class Deviation 2007-O0010, Contractor Personnel in the United States Central Command Area of Responsibility
CPA Order #17, *Registration Requirements for Private Security Companies*, dated 27 Jun 04;
U.S. CENTCOM Policy Letter, Mod 1, *Personal Protection and Contract Security Service Arming*, dated 7 Nov 2006
Required Government Documentation. The unit requesting the contractor security shall provide a description of the following to the arming approval authority and to the contracting officer:
The specific location where the PSC will operate;
The persons and/or property that require protection;
The anticipated threat;
The required weapon types; and
The reason current security/police forces are inadequate.
Required Contractor Documentation. Contractors and their subcontractors at all tiers that require arming approval shall provide the following to the contracting officer representative (COR):
Documentation that each employee who will be armed under the contract received the

following training—
Weapons Qualification/Familiarization. All employees must meet the qualification requirements established by any DoD or other U.S. government agency
Law of Armed Conflict (LOAC);
Rules for the Use of Force (RUF), as defined in the U.S. CENTCOM Policy, dated 23 December 2005; and
Distinction between the above-prescribed RUF and the Rules of Engagement (ROE), which are applicable only to military forces.
Completed DD Form 2760 (or equivalent documentation) for each armed employee, indicating that the employee is not otherwise prohibited under U.S. law from possessing the required weapon or ammunition.
One (1) copy of a business license from the Iraqi or Afghani Ministry of Trade or Interior;
One (1) copy of an operating license (or a temporary operating license) from the Ministry of Interior;
A communications plan that, at a minimum, sets forth the following:
The contractor's method of notifying military forces and requesting assistance where hostilities arise or combat action is needed;
How relevant threat information will be shared between contractor security personnel and U.S. military forces; and
How the contractor will coordinate transportation with appropriate military authorities.
An acceptable plan for accomplishing background checks on all contractor and subcontractor employees who will be armed under the contract. The contractor shall, at a minimum, perform the following (which will be specifically addressed in its plan and which will be documented and furnished to the COR upon completion):
Use one or more of the following sources when conducting the background checks: Interpol, FBI, Country of Origin Criminal Records, Country of Origin U.S. Embassy Information Request, CIA records, and/or any other records available;
Verify with MNC-I or Afghanistan RCE – CG Provost Marshal that no employee has been barred by any commander within Iraq or Afghanistan; and
Certify, after completing all checks, that all persons armed under this contract are not prohibited under U.S. law from possessing a weapon or ammunition.
Required Contractor Acknowledgements. Contractors and their subcontractors at all tiers that require arming approval will provide written acknowledgement of the following to the COR:
Penalties for Non-Compliance. Failure of contractor or subcontractor employee(s) to comply with the laws, regulations, orders, and rules (including those specified herein) governing the use of force may result in the revocation of weapons authorization for such employee(s). Where appropriate, such failure may also result in the total revocation of weapons authorization for the contractor (or subcontractor) and sanctions under the contract, including termination.
Criminal and Civil Liability. Arming of contractor or subcontractor employees under this contract may subject the contractor, its subcontractors, and persons employed by the same, to U.S. and Host Nation prosecution and civil liability. "Host Nation" refers to the nation or nations where services under this contract are performed.
Lapses in Training. Failure to successfully retrain an employee who is armed under this contract within twelve (12) months of the last training date will constitute a lapse in the employee's authorization to possess and carry the weapon. All unauthorized employees will immediately surrender their weapon to the contractor and will remain unarmed until such time as they are retrained and the COR determines that the retraining is sufficient.
Authorized Weapon & Ammunition Types. Unless DCDRUSCENTCOM (or a designee) provides otherwise, all arming requests and authorizations for contractor or subcontractor employees under this contract shall be limited to U.S. Government approved weapons and ammunition. This restriction applies to all weapons in the possession of contractor employees, even if such weapons are required for personal

protection. The following weapons and ammunition are currently authorized by the U.S. Government for use in Iraq and Afghanistan:
The M9, M4, M16, or equivalent (e.g. .45 CAL, AK-47).
The M9 or equivalent sidearm will be the standard personal protection weapon unless other weapons are specifically requested and approved.
U.S. government Ball ammunition is the standard approved ammunition.
Requirements for Individual Weapons Possession. All employees of the contractor and its subcontractors at all tiers who are armed under this contract must:
Possess only those U.S. Government-approved weapons and ammunition for which they are qualified under the training requirements of section (c);
Carry weapons only when on duty or at a specific post;
Not conceal any weapons, unless specifically authorized;
Carry proof of authorization to be armed. Employees not possessing such proof will be deemed unauthorized and must surrender their weapon to their employer; and
IAW USCENTCOM G.O. #1, consumption of alcohol in Iraq or Afghanistan is prohibited. In the event of a suspension or and exception to G.O. #1, employees shall not consume any alcoholic beverage while armed or within eight (8) hours of the next work period where they will be armed.
Weapons/Equipment Restrictions and Responsibilities. Unless otherwise provided, the U.S. Government will not provide any weapons or ammunition to contractors, their subcontractors, or any employees of the same. The Contractor will provide all weapons and ammunition to those employees that will be armed under the contract. The contractor and its subcontractors at all tiers will also provide interceptor body armor, ballistic helmets, and the Nuclear, Biological, and Chemical (NBC) protective masks to those employees that require such equipment in the performance of their duties.
Rules for the Use of Force (RUF). In addition to the RUF and ROE training referenced in paragraph (c), the contractor and its subcontractors at all tiers will monitor and report all activities of its armed employees that may violate the RUF. Prompt reporting demonstrates a desire by the contractor and its subcontractors to minimize the impact of any violations and, therefore, will be given favorable consideration. Violations of the RUF include, though are not limited to:
Taking a direct part in hostilities or combat actions, other than to exercise self-defense;
Failing to cooperate with Coalition and Host Nation forces;
Using deadly force, other than in self-defense where there is a reasonable belief of imminent risk of death or serious bodily harm;
Failing to use a graduated force approach;
Failing to treat the local civilians with humanity or respect; and
Detaining local civilians, other than in self-defense or as reflected in the contract terms.
Retention and Review of Records. The Contractor and all subcontractors at all tiers shall maintain records on weapons training, LOAC, RUF and the screening of employees for at least six (6) months following the expiration (or termination) of the contract. The Contractor and its subcontractors at all tiers shall make these records available to the Contracting Officer or designated representative, at no additional cost to the government, within 72 hours of a request.
Contractor Vehicles. Vehicles used by contractor and subcontractor personnel in the course of their security duties shall not be painted or marked to resemble U.S./Coalition or host nation military and police force vehicles.
Quarterly Reporting. The prime contractor will report quarterly (i.e. NLT 1 January, 1 April, 1 July and 1 October for each quarter of the calendar year) to the Contracting Officer responsible for this contract, and any other organization designated by the Contracting Officer, the following information under this contract:
The total number of armed civilians and contractors;
The names and contact information of its subcontractors at all tiers; and
A general assessment of the threat conditions, adequacy of force numbers, and any problems that might require a change to force levels. Note: this information is in addition

to the information the contractor promises to immediately provide under the communications plan referenced at paragraph (c)(5).

(End of Requirement)

AI 25.1103-2
ARMED PERSONNEL INCIDENT REPORTS
(MAR 2009)

(a) All contractors and subcontractors in the Multi-National Forces-Iraq (MNF-I) or Combined Joint Task Force (Afghanistan) theater of operations shall comply with and shall ensure that their personnel supporting MNF-I or CJTF forces are familiar with and comply with all applicable orders, directives, and instructions issued by the respective MNF-I or CJTF Commanders relating to force protection and safety.
(b) **IRAQ**: Contractors shall provide all incidents and use of weapons firing incidents to the MNC-I Contractor Operations Cell (CONOC) as soon as practical, based upon the situation, and submit a written report to CONOC within 4 hours. The initial report shall include the name of the company, location of the incident, time when the incident occurred, a brief description of the events leading up to the incident, and a company point of contact. A follow-up, comprehensive written report shall be provided to the CONOC within 96 hours of the incident. Reports shall be submitted to CONOC at: mncic3conoc@iraq.centcom.mil;, DSN 318-435-2369; Iraqna 0044 203 286 9851 or 0044 203 239 5894; or Skype: MNCICONOC.
(c) **AFGHANISTAN**: Contractors shall report all incidents and use of weapons through their Contracting Officers who will notify the JOC Watch at Bagram AB. (JOC SHIFT DIRECTOR, DSN: 318-431-4116; SVOIP: 431-7108) Information should include: the name of the company, where the incident occurred, time when the incident occurred, a brief description of the events leading up to the incident, and a point of contact for the company. The JOC Watch duty officer will issue guidance for further reporting requirements.
(d) Contractors shall provide first aid and request MEDEVAC of injured persons, and remain available for U.S. or Coalition response forces, based upon the situation. In the event contractor personnel are detained by U.S. or Coalition Forces, prolonged detention due to lack of proper identification can be alleviated by contractor personnel possessing on their person information that includes the contractor's name, the contract number, a contractor management POC, and the phone number of the CONOC/JOC Watch.

(End of Requirement)

AI 25.1103-103
FITNESS FOR DUTY AND MEDICAL/DENTAL CARE LIMITATIONS
(MAR 2009)

(1) The contractor shall perform the requirements of this contract notwithstanding the fitness for duty of deployed employees, the provisions for care offered under this section, and redeployment of individuals determined to be unfit. The contractor bears the responsibility for ensuring all employees are aware of the conditions and medical treatment available at the performance. The contractor shall include this information and requirement in all subcontracts with performance in the theater of operations.
(2) The contractor shall not deploy an individual with any of the following conditions unless approved by the appropriate CENTCOM Service Component (ie. ARCENT, AFCENT, etc.) Surgeon: Conditions which prevent the wear of personal protective equipment, including protective mask, ballistic helmet, body armor, and chemical/biological protective garments; conditions which prohibit required theater

immunizations or medications; conditions or current medical treatment or medications that contraindicate or preclude the use of chemical and biological protectives and antidotes; diabetes mellitus, Type I or II, on pharmacological therapy; symptomatic coronary artery disease, or with myocardial infarction within one year prior to deployment, or within six months of coronary artery bypass graft, coronary artery angioplasty, or stenting; morbid obesity (BMI >/= 40); dysrhythmias or arrhythmias, either symptomatic or requiring medical or electrophysiologic control; uncontrolled hypertension, current heart failure, or automatic implantable defibrillator; therapeutic anticoagulation; malignancy, newly diagnosed or under current treatment, or recently diagnosed/treated and requiring frequent subspecialist surveillance, examination, and/or laboratory testing; dental or oral conditions requiring or likely to require urgent dental care within six months' time, active orthodontic care, conditions requiring prosthodontic care, conditions with immediate restorative dentistry needs, conditions with a current requirement for oral-maxillofacial surgery; new onset (< 1 year) seizure disorder, or seizure within one year prior to deployment; history of heat stroke; Meniere's Disease or other vertiginous/motion sickness disorder, unless well controlled on medications available in theater; recurrent syncope, ataxias, new diagnosis (< 1year) of mood disorder, thought disorder, anxiety, somotoform, or dissociative disorder, or personality disorder with mood or thought manifestations; unrepaired hernia; tracheostomy or aphonia; renalithiasis, current; active tuberculosis; pregnancy; unclosed surgical defect, such as external fixeter placement; requirement for medical devices using AC power; HIV antibody positivity; psychotic and bipolar disorders. (Reference: Mod 8 to USCENTCOM Individual Protection and Individual/Unit Deployment Policy, PPG-Tab A: Amplification of the Minimal Standards of Fitness for Deployment to the CENTCOM AOR).
(3) In accordance with military directives (DoDI 3020.41, DoDI 6000.11, CFC FRAGO 09-1038, DoD PGI 225.74), resuscitative care, stabilization, hospitalization at Level III (emergency) military treatment facilities and assistance with patient movement in emergencies where loss of life, limb or eyesight could occur will be provided. Hospitalization will be limited to emergency stabilization and short-term medical treatment with an emphasis on return to duty or placement in the patient movement system. Subject to availability at the time of need, a medical treatment facility may provide reimbursable treatment for emergency medical or dental care such as broken bones, lacerations, broken teeth or lost fillings.
(4) Routine and primary medical care is not authorized. Pharmaceutical services are not authorized for routine or known, routine prescription drug needs of the individual. Routine dental care, examinations and cleanings are not authorized.
(5) Notwithstanding any other provision of the contract, the contractor shall be liable for any and all medically-related services or transportation rendered. In accordance with OUSD(C) Memorandum dated 4 June 2008, the following reimbursement rates will be charged for services at all DoD deployed medical facilities. These rates are in effect until changed by DoD direction.
(a) Inpatient daily rate: $2,041.00. Date of discharge is not billed unless the patient is admitted to the hospital and discharged the same day.
(b) Outpatient visit rate: $195.00. This includes diagnostic imaging, laboratory, pathology, and pharmacy provided at the medical facility.

(End of Requirement)

AI 25.1103-104
COMPLIANCE WITH LAWS AND REGULATIONS
(MAR 2009)

(a) The Contractor shall comply with, and shall ensure that its employees and its

subcontractors and their employees, at all tiers, are aware of and obey all U.S. and Host Nation laws, Federal or DoD regulations, and Central Command orders and directives applicable to personnel in Iraq and Afghanistan, including but not limited to USCENTCOM, Multi-National Force and Multi-National Corps operations and fragmentary orders, instructions, policies and directives.
(b) Contractor employees shall particularly note all laws, regulations, policies, and orders restricting authority to carry firearms, rules for the use of force, and prohibiting sexual or aggravated assault. Contractor employees are subject to General Orders Number 1, as modified from time to time, including without limitation, their prohibition on privately owned firearms, alcohol, drugs, war souvenirs, pornography and photographing detainees, human casualties or military security measures.
(c) Contractor employees may be ordered removed from secure military installations or the theater of operations by order of the senior military commander of the battle space for acts that disrupt good order and discipline or violate applicable laws, regulations, orders, instructions, policies, or directives. Contractors shall immediately comply with any such order to remove its contractor employee.
(d) Contractor employees performing in the USCENTCOM Area of Operations (AOR) may be subject to the jurisdiction of overlapping criminal codes, including, but not limited to, the Military Extraterritorial Jurisdiction Act (18 U.S.C. Sec. 3261, et al) (MEJA), the Uniform Code of Military Justice (10 U.S.C. Sec. 801, et al)(UCMJ), and the laws of the Host Nation. Non-US citizens may also be subject to the laws of their home country while performing in the USCENTCOM AOR. Contractor employee status in these overlapping criminal jurisdictions may be modified from time to time by the United States, the Host Nation, or by applicable status of forces agreements.
(e) Under MEJA, a person who engages in felony misconduct outside the United States while employed by or accompanying the Armed Forces is subject to arrest, removal and prosecution in United States federal courts. Under the UCMJ, a person serving with or accompanying the Armed Forces in the field during a declared war or contingency operation may be disciplined for a criminal offense, including by referral of charges to a General Court Martial. Contractor employees may be ordered into confinement or placed under conditions that restrict movement within the AOR or administratively attached to a military command pending resolution of a criminal investigation.
(f) Contractors shall immediately notify military law enforcement and the Contracting Officer if they suspect an employee has committed an offense. Contractors shall take any and all reasonable and necessary measures to secure the presence of an employee suspected of a serious felony offense. Contractors shall not knowingly facilitate the departure of an employee suspected of a serious felony offense or violating the Rules for the Use of Force to depart Iraq or Afghanistan without approval from the senior U.S. commander in the country.

(End of Requirement)

AI 25.1103-105
MONTHLY CONTRACTOR CENSUS REPORTING
(MAR 2009)

Contractor shall provide monthly employee census information to the Contracting Officer, by province, for this contract. Information shall be submitted either electronically or by hard-copy. Information shall be current as of the 25th day of each month and received by the Contracting Officer no later than the first day of the following month. The following information shall be provided for each province in which work was performed:
(1) The total number (prime and subcontractors at all tiers) employees.
(2) The total number (prime and subcontractors at all tiers) of U.S. citizens.

(3) The total number (prime and subcontractors at all tiers) of local nationals (LN).
(4) The total number (prime and subcontractors at all tiers) of third-country nationals (TCN).
(5) Name of province in which the work was performed.
(6) The names of all company employees who enter and update employee data in the Synchronized Predeployment & Operational Tracker (SPOT) IAW DFARS 252.225-7040 or DFARS DOD class deviation 2007-O0010.

(End of Requirement)

AI 25.1103-109
MEDICAL SCREENING AND VACCINATION REQUIREMENTS FOR LOCALLY HIRED EMPLOYEES
(MAR 2009)

(a) Contractors, and subcontractors at any tier shall ensure and provide satisfactory evidence that all locally hired employees, including Local National (LN), Third Country National, and U.S. employees, working on military have been screened for and do not currently have active tuberculosis (TB).
(1) Contractors may utilize a testing method of either a chest x-ray or TB skin test (TST).
(i) Chest x-rays shall be taken and TBTs administered within 90 days prior to the start of employment.
(ii) Screening may be performed either by a licensed medical provider from the local economy or by contractors' licensed medical staffs. Contractors shall maintain medical screening documentation and make it available to the Contracting Officer upon request.
(2) TB screening documentation will be required by the responsible Base Defense Operations Center (BDOC) prior to issuance of base access badges.
(b) Contractor employees, including subcontractors at any tier, who work in positions where they are working with food or water production and distribution shall have current Typhoid and Hepatitis "A" (full series) vaccinations, in addition to the TB tests required above.
(a) At least the first inoculation in the Hepatitis "A" series must be given prior to the start of employment, with continuation and completion of the inoculation series. The Typhoid inoculation must be completed within two years prior to the date of employment in the food and water service capacity.
(i) Once the complete Hepatitis "A" vaccination series is completed, it does not have to be repeated. The Typhoid vaccination requires a booster immunization every three years.
(ii) Proof of individual employee vaccinations shall be provided to the Contracting Officer and maintained by the Contractor for examination by the Contracting Officer.

(End of Requirement)

AI 25.1103-110

CONTRACTOR EMPLOYEE LEGAL REQUIREMENTS

(MAR 2009)

(a) The contractor shall not employ, nor allow a subcontractor to employ, any person that has ever been convicted, in any U.S. court, including a court-martial, of any crime against an Iraqi and/or an Afghan national, regardless of the place at which the crime occurred.

(b) For the purpose of this clause, “crime” is defined as: “a violation of a law in which there is injury to the public or a member of the public and a term in jail or prison, and/or a fine as possible penalties.” Further, the crime must be an offense that could be classified as a Class B misdemeanor, or any higher class up to a Class A felony, as referenced at 18 USC §3559.

(c) Contractors shall exercise effective screening processes to ensure that individuals not conforming to this standard are identified and prohibited from, or removed from (if already employed) working under this contract.

(d) Contractor employees discovered to have one of more prior convictions as described above shall be removed from the contract at the contractor’s expense.

(e) Failure to adhere to the requirements of this clause could result in a termination for cause or termination for default, in accordance with the terms and conditions of this contract.

AI 36.521-100
ELECTRICAL AND STRUCTURAL BUILDING STANDARDS FOR CONSTRUCTION PROJECTS
(MAR 2009)

(a) The standards set forth herein are the minimum requirements for the contract. These standards must be followed unless a more stringent standard is specifically included. In such case the most stringent standard shall be required for contract acceptance.
(b) The contractor, in coordination with the Contracting Officer, Base Camp Mayor, Base/Unit Engineers, and requiring activity shall evaluate, upgrade, build, and/or refurbish buildings to a safe and livable condition. This work may include refurbishment, construction, alterations, and upgrades. All work shall be in accordance with accepted standards of quality.
(c) As dictated by the Unified Facilities Criteria (UFC) the contract shall meet:
(1) “the minimum requirements of United States’ National Fire Protection Association (NFPA) 70,
(2) National Electrical Code (NEC),
(3) the American National Standards Institute (ANSI) C2, and
(4) the United States’ National Electrical Safety Code (NESC).
(d) These standards must be met when it is reasonable to do so with available materials. When conditions dictate deviation, then provisions within the International Electrical Code (IEC) or British Standard (BS 7671) shall be followed. Any deviations from the above necessary to reflect market conditions, shall receive prior written approval from a qualified engineer and the Contracting Officer.
(e) The following internet links provide access to some of these standards:
UFC: http://65.204.17.188/report/doc_ufc.html
NFPA 70: http://www.nfpa.org
NESC: http://www.standards.ieee.org/nesc

(End of Requirement)

Section 00800 - Special Contract Requirements

CLAUSES INCORPORATED BY REFERENCE

52.211-13 Time Extensions SEP 2000

CLAUSES INCORPORATED BY FULL TEXT

52.211-10 COMMENCEMENT, PROSECUTION, AND COMPLETION OF WORK (APR 1984)

The Contractor shall be required to (a) commence work under this contract within 420 calendar days after the date the Contractor receives the notice to proceed, (b) prosecute the work diligently, and (c) complete the entire work ready for use not later than 420 days after receiving the notice to proceed. * The time stated for completion shall include final cleanup of the premises.

*The Contracting Officer shall specify either a number of days after the date the contractor receives the notice to proceed, or a calendar date.

(End of clause)

52.211-12 LIQUIDATED DAMAGES--CONSTRUCTION (SEP 2000)

(a) If the Contractor fails to complete the work within the time specified in the contract, the Contractor shall pay liquidated damages to the Government in the amount of $1,156.00 for each calendar day of delay until the work is completed or accepted.

(b) If the Government terminates the Contractor's right to proceed, liquidated damages will continue to accrue until the work is completed. These liquidated damages are in addition to excess costs of repurchase under the Termination clause.

(End of clause)

52.236-4 PHYSICAL DATA (APR 1984)

Data and information furnished or referred to below is for the Contractor's information. The Government shall not be responsible for any interpretation of or conclusion drawn from the data or information by the Contractor.

(a) The indications of physical conditions on the drawings and in the specifications are the result of site investigations by . . . . . [insert a description of investigational methods used, such as surveys, auger borings, core borings, test pits, probings, test tunnels].

(b) Weather conditions . . . . . (insert a summary of weather records and warnings).

(c) Transportation facilities . . . . . (insert a summary of transportation facilities providing access from the site, including information about their availability and limitations.

(d) . . . . . (insert other pertinent information).

(End of clause)

52.246-12 INSPECTION OF CONSTRUCTION (AUG 1996)

(a) Definition. "Work" includes, but is not limited to, materials, workmanship, and manufacture and fabrication of components.

(b) The Contractor shall maintain an adequate inspection system and perform such inspections as will ensure that the work performed under the contract conforms to contract requirements. The Contractor shall maintain complete inspection records and make them available to the Government. All work shall be conducted under the general direction of the Contracting Officer and is subject to Government inspection and test at all places and at all reasonable times before acceptance to ensure strict compliance with the terms of the contract.

(c) Government inspections and tests are for the sole benefit of the Government and do not--

(1) Relieve the Contractor of responsibility for providing adequate quality control measures;

(2) Relieve the Contractor of responsibility for damage to or loss of the material before acceptance;

(3) Constitute or imply acceptance; or

(4) Affect the continuing rights of the Government after acceptance of the completed work under paragraph (i) of this section.

(d) The presence or absence of a Government inspector does not relieve the Contractor from any contract requirement, nor is the inspector authorized to change any term or condition of the specification without the Contracting Officer's written authorization.

(e) The Contractor shall promptly furnish, at no increase in contract price, all facilities, labor, and material reasonably needed for performing such safe and convenient inspections and tests as may be required by the Contracting Officer. The Government may charge to the Contractor any additional cost of inspection or test when work is not ready at the time specified by the Contractor for inspection or test, or when prior rejection makes reinspection or retest necessary. The Government shall perform all inspections and tests in a manner that will not unnecessarily delay the work. Special, full size, and performance tests shall be performed as described in the contract.

(f) The Contractor shall, without charge, replace or correct work found by the Government not to conform to contract requirements, unless in the public interest the Government consents to accept the work with an appropriate adjustment in contract price. The Contractor shall promptly segregate and remove rejected material from the premises.

(g) If the Contractor does not promptly replace or correct rejected work, the Government may (1) by contract or otherwise, replace or correct the work and charge the cost to the Contractor or (2) terminate for default the Contractor's right to proceed.

(h) If, before acceptance of the entire work, the Government decides to examine already completed work by removing it or tearing it out, the Contractor, on request, shall promptly furnish all necessary facilities, labor, and material. If the work is found to be defective or nonconforming in any material respect due to the fault of the Contractor or its subcontractors, the Contractor shall defray the expenses of the examination and of satisfactory reconstruction. However, if the work is found to meet contract requirements, the Contracting Officer shall make an equitable adjustment for the additional services involved in the examination and reconstruction, including, if

completion of the work was thereby delayed, an extension of time.

(i) Unless otherwise specified in the contract, the Government shall accept, as promptly as practicable after completion and inspection, all work required by the contract or that portion of the work the Contracting Officer determines can be accepted separately. Acceptance shall be final and conclusive except for latent defects, fraud, gross mistakes amounting to fraud, or the Government's rights under any warranty or guarantee.

(End of clause)

252.232-7003 ELECTRONIC SUBMISSION OF PAYMENT REQUESTS AND RECEIVING REPORTS (MAR 2008)

(a) Definitions. As used in this clause--

(1) Contract financing payment and invoice payment have the meanings given in section 32.001 of the Federal Acquisition Regulation.

(2) Electronic form means any automated system that transmits information electronically from the initiating system to all affected systems. Facsimile, e-mail, and scanned documents are not acceptable electronic forms for submission of payment requests. However, scanned documents are acceptable when they are part of a submission of a payment request made using Wide Area WorkFlow (WAWF) or another electronic form authorized by the Contracting Officer.

(3) Payment request means any request for contract financing payment or invoice payment submitted by the Contractor under this contract.

(b) Except as provided in paragraph (c) of this clause, the Contractor shall submit payment requests and receiving reports using WAWF, in one of the following electronic formats that WAWF accepts: Electronic Data Interchange, Secure File Transfer Protocol, or World Wide Web input. Information regarding WAWF is available on the Internet at https://wawf.eb.mil/.

(c) The Contractor may submit a payment request and receiving report using other than WAWF only when--

(1) The Contracting Officer authorizes use of another electronic form. With such an authorization, the Contractor and the Contracting Officer shall agree to a plan, which shall include a timeline, specifying when the Contractor will transfer to WAWF;

(2) DoD is unable to receive a payment request or provide acceptance in electronic form;

(3) The Contracting Officer administering the contract for payment has determined, in writing, that electronic submission would be unduly burdensome to the Contractor. In such cases, the Contractor shall include a copy of the Contracting Officer's determination with each request for payment; or

(4) DoD makes payment for commercial transportation services provided under a Government rate tender or a contract for transportation services using a DoD-approved electronic third party payment system or other exempted vendor payment/invoicing system (e.g., PowerTrack, Transportation Financial Management System, and Cargo and Billing System).

(d) The Contractor shall submit any non-electronic payment requests using the method or methods specified in Section G of the contract.

(e) In addition to the requirements of this clause, the Contractor shall meet the requirements of the appropriate payment clauses in this contract when submitting payments requests.

(End of clause)

SECTION 01010

SCOPE OF WORK – DESIGN BUILD

1.0 GENERAL

The project consists of the design and construction of a new Afghanistan National Army, Corps Support Battalion and related support facilities on Camp Zafar, Herat, Afghanistan. Site is located south of the existing ANA Garrison. Contractor is required to take partial design provided in the Appendices and CD and complete the design to meet all the requirements and applicable criteria and codes. Contractor may propose alternate permanent construction means and methods to facilitate project completion within the construction duration time frame. The project is defined as the design, material, labor, and equipment to construct buildings, parking, utilities and other infrastructure. The work within this contract shall meet and be constructed in accordance with current U.S. design and International Building Codes (IBC), Life Safety Codes (NFPA-101), Force Protection and security standards. A partial listing of references is:

IBC, International Building Codes 2006
NFPA 101, Life Safety Codes
UFC 4-010-01, DoD Minimum Anti-Terrorism Standards for Buildings.

Table 1.0 Population for Corps Support Battalion

SENIOR	Officer	NCO	LOW	TOTAL
BN CDR	O2-O5	E7-E9	E1-E6	
1	**41**	**60**	**598**	**700**

*Contractor shall design and construct infrastructure for Electrical distribution, Water distribution, and Sanitary Sewer Treatment systems for effective end-state population of **1400** personnel.

1.1 ENGLISH LANGUAGE REQUIREMENT

All information shall be presented in English. The Contractor shall have a minimum of one English-speaking representative to communicate with the COR at all times when work is in progress.

1.2 SUBMITTALS

Submittals and a Submittal Register are required as specified in Section 01335 of the Basic Contract.

1.3 CQM TRAINING REQUIREMENT

Before project design and construction begin, the Contractor's Quality Control Manager is required to have completed the U.S. Army Corps of Engineers (USACE) Construction Quality Management (CQM) course, or equivalent. The CQM course will be offered periodically by the Afghanistan Engineer District (AED), USACE. Additional approved CQM courses include those offered by the Commercial Technical Training Center (in Jalalabad) and the Champion Technical Training Center (in Kabul). The Quality Assurance Branch of the AED can provide information related to AED offerings of the CQM course, as

well as contact information for training centers. Alternative CQM courses, other than those mentioned above, must be approved by the Quality Assurance Branch.

The contractor's quality control plan, as defined in USACE Guide Specification 01451 (or 01 45 04.00 10), entitled "Contractor Quality Control", must include "The name, qualifications (in resume format), duties, responsibilities, and authorities of each person assigned a CQC function." For the QC Manager, qualifications must include a certificate demonstrating completion of an approved CQM course.

1.4 ELECTRICAL WORKERS QUALIFICATIONS

Electrical work shall be performed by Qualified Personnel with verifiable credentials who are thoroughly knowledgeable with applicable code requirements. Verifiable credentials consist of a certificate of graduations from an approved trade school and required amount of experience, depending on work being performed, and should be identified in the proposal that is submitted. Qualified personnel is one who has received training in and has demonstrated skills and knowledge in the construction and operation of electrical equipment and installations and the hazards involved. This includes the skills and techniques necessary to distinguish exposed live parts from other parts of electric equipment, to determine the nominal voltage of exposed live parts, the clearance distances and corresponding voltages to which the qualified person will be exposed.

1.4.1 Supervisory Electrician

Supervisory electricians must be graduates of an approved trade school, and must have two years of relevant electrician experience. Approved programs include but are not limited to the Afghanistan Technical and Vocational Institute (in Kabul), the Kunar Trades Training Center, and the Commerical Technical Training Center (in Jalalabad). Work experience resumes and graduation certificates shall be submitted and approved prior to commencement of any design or construction involving electrical work. Approval is granted by the Contracting Officer's Representative with guidance by the Quality Assurance Branch and/or the Safety Office of the Afghanistan Engineer District, US of the Army Corps of Engineers.

1.4.2 Electricians

Electricians must be graduates of an approved trade school and must be able to provide upon request a certification of successful course work completion and graduation in addition to a resume of work experience.

2.0 LOCATION

The site is located next to Camp Zafar, Herat, Afghanistan, as shown on attached drawings.

3.0 UNEXPLODED ORDNANCE (UXO)

3.1 UXO REMOVAL AND CLEARANCE

The contractor is not responsible for the clearance or removal of mines and unexploded ordnance (UXO) from the site prior to the commencement of construction.

It is the responsibility of the Contractor to be aware of the risk of encountering UXO or mines and to take all actions necessary to assure a safe work area to perform the requirements of this contract. The Contractor assumes the risk of any and all personal injury, property damage or other liability arising out of or resulting from any Contractor action taken hereunder. The Contractor and its subcontractors may

not handle, work with, move, transport, render safe, or disarm any UXO or mine, unless they have appropriate accreditations from MAC.

If a UXO or mine is encountered during project construction, UXO or mine disposal shall be handled in accordance with Section 01015, Technical Requirements.

4.0 SUMMARY OF WORK

4.1 CONTRACTOR REQUIREMENTS

The contractor shall design and construct the facilities as a design-construct contract and shall be in accordance with the requirements stated in Section 01015: Technical Requirements. Refer to attachment following this section for more specifics for required spaces. Design and construction work shall include but not be limited to that shown within attached tables and described below.

The Contractor shall be responsible for physical security of all materials, supplies, and equipment of every description, including property which may be Government-furnished or owned, for all areas occupied jointly by the Contractor and the Government, as well as for all work performed.

4.1.1 GENERAL REQUIREMENTS FOR FACILITIES

All requirements set forth in the Scope of Work, but not included in the Technical Requirements, shall be considered as set forth in both, and vice versa. Provide heating, ventilation, and cooling for all facilities unless otherwise stated in sections 01010 or 01015. All toilets shall be eastern-style. All eastern-style toilets shall face North or South.

All standard construction amenities and details such as heating, lighting, site drainage, utility connections, etc. shall be implied as a design and construction requirement. Drawings referenced are contained in Appendix A. The conceptual site plan is at Appendix B. Concrete walkways are required to connect all buildings, facilities, and features such as parking lots, power plants, etc.

Design and Construct circulation pathways and exit stairs in accordance with building code references herein. Fire sprinkler system is not required. The facility shall comply with all other safety requirements as required within references. Smoke detectors and fire alarm systems shall be installed in accordance with requirements herein.

No pre-engineered facilities are allowed for this project, to include all buildings described within this scope of work specification. This restriction includes “Butler” type metal buildings and pre-manufactured building units of any type. Any reference in the technical specifications to pre-engineered facilities is not considered part of this contract.

Provide signage for each facility on the exterior of the buildings in Dari, Pashto and English. Contractor shall coordinate signage with COR.

The design and construction work shall include but not be limited to the following sub-paragraphs.

In general, this project consists of design and construction of the following:

4.1.1.1 Base Bid

- Design Cost, Site Survey, and Master Plan
- As-Built Drawings
- Mobilization, Demobilization, and General Site Work
    - Potable Water Supply System
    - Sanitary Sewer Collection and Treatment System

- Site Electrical Distribution System
- Perimeter Fence
- Primary Entry Control Point
- Guard Towers (partial Design Available)
- Road Network and Sidewalk
- Trash Collection Points
- Officer Barracks with *Toilet/Shower/Ablution* (partial Design Available)
- Enlisted Barracks (partial Design Available)
- Dining Facility (DFAC) and Dry Storage Yard (partial Design Available)
- Battalion Headquarters Building/ Admin (partial Design Available)
- Toilet/Shower/Ablution/Laundry Facility (partial Design Available)
- Vehicle Refueling Point
- Motor Pool Gravel Parking
- CSB Organic Wheeled Vehicle Maintenance Facility (9 Double Bay) (partial Design Available)
- Communication Building (partial Design Available)
- GSE Communication and Armament Maintenance Facility
- POL Storage Building (partial Design Available)
- General Warehouse Storage (partial Design Available)
- Arms Storage Building (partial Design Available)
- Vehicle Wash Rack
- General Non-Organic Wheeled Vehicle Maintenance Facility - Two (9 Double Bay) (partial Design Available) (refer to 4.22 drawings)
- Security Building
- Water Meter and Hose Bibb at Main Water Well (9.5 km to the north)
- Water system analysis (including existing well) supporting the ANA Brigade (Camp Zafar)
- Bunkers

4.1.1.2 Option Items

- Road Network – Asphalt Paving of Interior Roads
- Perimeter Walls
- General Warehouse Storage (partial Design Available)
- MWR GYM and outside volleyball courts
- General Non-Organic Wheeled Vehicle Maintenance Facility (9 Double Bay) (partial Design Available) (refer to 4.22 drawings)

See Appendix A for facilities drawings.
* Facilities with listed with (partial Design Available) additional drawings will be available on CD at the Corps of Engineer Afghanistan District Headquarters, Qalaa House Compound in Kabul. Contractors should contact the Contract Specialist in advance for CD request and pick up CD at COE HQs. CADD files will be provided to the successful offeror after award.

4.1.2 SECURITY MEASURES

The Contractor shall be responsible for physical security of all materials, supplies, and equipment of every description, including property which may be Government-furnished or owned, for all areas occupied jointly by the Contractor and the Government, as well as for all work performed. This may include but not limited to: Security guards, temporary fencing, material during delivery, and control access to the construction site.

4.2 SITE PLANNING

It is highly recommended that the Contractor visit the site before preparing and submitting their bid proposal.

The Contractor shall prepare a site boundary survey and site plan based on information contained in the Request for Proposal. The Concept Site layout provided in the Appendix is only a "Concept" and may not capture the total scope. The Contractor must incorporate all the requirements in the 1010 and 1015 and provide provisions for future expansion. **The development of the master plan will include participation in design charrettes conducted at the Afghanistan Engineer District Headquarters Office in Kabul, Resident Office, or Area Engineer Office as determined by government Contracting Officer's representative (COR) or Project Manager (PM).** Contactor shall verify all space requirements and code compliance in accordance with sections 01010 and 01015 of this contract.

The Project construction site is approximately 300 meter by 1,400 meter plus 210 meter by 290 meter at approximately 481,000 SM. The project construction site is adjacent to the existing Camp Zafar Installation. Contractor is responsible to verify actual site condition before bidding.

The contractor shall arrange the facilities involved in vehicle maintenance on post so as to support a logical progression of work. First, vehicles freshly arrived from the field shall be washed prior to maintenance. The wash rack should be located at a higher elevation than other maintenance facilities to allow proper filtration and gravity drainage of wastewater, and shall be located as far from fuel dispensing or storage sites as possible to avoid any mixing of wastewater and fuel.

Second, vehicles shall be able to arrive at maintenance bays in a reasonably clean condition - meaning place the wash rack a relatively short distance from maintenance bays.

Third, after maintenance is performed, vehicles shall be driven to the vehicle refueling point over such a route so as not to interfere with vehicles proceeding to either the wash rack or maintenance facilities. The vehicle refueling point shall be at a lower elevation than the drinking well, and contractor shall ensure the refueling point is a minimum distance of 30.5 meters from the drinking well. Similar safety distances between fuel lines and all water lines shall be maintained.

Fourth, once refueled, vehicles shall be driven to appropriate parking areas, again without crossing traffic undergoing other stages of maintenance.

Refer to UFC 3-230-07a, Table 5-2 for minimum distances from pollution sources to water wells. Building sewer = 50 feet, Septic Tank = 50 feet, disposal field = 100 feet. Seepage pit = 100 feet. Dry Well = 50 feet, and Cesspool = 150 feet.

Contractor shall Master plan for **1400** personnel to include future expansion space for additional 700 personnel (ESB) Engineer Support Battalion, as well as the 700 personnel for CSB. Future ESB shall include Barracks, Battalion Admin Office Facility, and Vehicle Maintenance Facility.

4.3 DEMOLITION, DRAINAGE, AND GRADING

Minor site demolition is required prior to construction of new work. Grading at the site is required and shall conform to requirements within references herein and Section 1015 Technical Requirements of the contract. Contractor is required to grade the entire master plan site as described in paragraph 4.1.3 SITE PLANNING "The project Construction site…"

The Contractor shall develop a Grading and Drainage Plan for the entire area directing water away from buildings and eliminating any standing water. Proposed grade shall be shown in the form of contour lines on the Grading and Drainage Plan. Spot elevations of surface structures including but not limited

to manhole covers, road centerline elevations, centerline of drainage swales, finished floor elevations shall be shown.

The contractor shall perform complete final site grading after installation of all required drainage structures per the Drainage Plan and after installation of any other buried utilities or other project components.
Native crushed stone 100 mm thick shall be placed around all buildings, from the building wall or building landscaping out to a distance of 2m and all areas of anticipated foot or vehicle traffic in order to reduce erosion and to provide dust control. Concrete walkways minimum 100mm thick and 1.2m wide shall be installed between buildings and parking areas.

4.4 WATER SYSTEM

The Contractor shall perform a water system analysis of the existing system that is currently serving the ANA Brigade. This analysis shall include but not be limited to determining the existing distribution size and layout, existing water demand, pressures, and well drawdown and production for the ANA Brigade. This information shall be included as part of the initial design review submittal.

The Contractor shall use this information and determine if the future Average daily Demand (ADD) from the CSB can be sustained in conjunction with the existing demand. The ADD shall be calculated for an effective population of **1,400**, using a per capita consumption rate of 53 gallons (200 liters) per person per day. This effective population shall be multiplied by a capacity factor of 1.5 to provide a design population and account for future growth and peak demand, per UFC 3-230-07a, paragraph 1-3, and UFC 3-230-03a, paragraph 3-1.

The Contractor shall design and construct a Potable Water Distribution System (PWDS), to include ground storage reservoir, disinfection and chlorination system, booster pumps, an enclosed pump house and an underground pipe distribution network. The PWDS shall be designed and constructed to allow connection to the existing distribution network by the existing water storage tanks at the ANA Brigade site.

The booster pumps shall be constructed to deliver a minimum 345-414 kPa (50-60 psi) at a flow rate equal to 2.5 the ADD, per UFC 3-230-03a Water Supply. Water tank or tanks shall provide storage capacity for a minimum of one day's ADD. The distribution system shall be designed to provide pressures in the range of 276-414 kPa (40-60 psi) at ground level at all points in the delivery system. Maximum water pressures in distribution mains and service lines shall not exceed 517 kPa (75 psi) at ground elevation. Maximum velocity of flow in the system shall be 8 fps. Refer to IPC Commentary Section 604, and UFC 2-230-10a, Chapter 8 for designing for maximum flow. Water demand required for fire fighting and for irrigation and landscaping needs shall not be included in design demand calculations.

The pump house, and tank shall be surrounded by a chain link fence with lockable gate, topped by outriggers and barbed or concertina wire. Provide an access road and area sufficient for a large truck such as a mobile crane to turn. Access road should be constructed of the same material and design as the roads in the CSB.

The contractor shall complete the Water supply system must be operational no later than 280 days from award. If the water supply system is not completed by this date, the contractor will be required to supply potable water from a source off of the CSB addition to Camp Zafar.

Also Install Water Meter and Hose Bibb at Main Water Well (9.5 km to the north).

4.4 **4.4.5 WATER TANK**

Contractor shall provide a circular steel or concrete ground storage reservoir tank(s) (GST) located on a slab set a minimum of 150mm above grade. Volume of the GST shall be a minimum storage volume of a full day's ADD. The storage facility shall be located above drainage areas and locations subject to flooding as approved by the Contracting Officer. Overflow and air vents shall be screened so that birds, rodents, and debris cannot enter the reservoir. Water tank shall be lockable.

Total volume of the tank(s) shall be a minimum storage volume of a full day's water demand (24 hours). The contractor shall verify storage volume requirements based on final design population.

4.5 **SANITARY SEWER & TREATMENT SYSTEM**

The Contractor shall design and construct a new aerated Waste Water Treatment system to support a sanitary load of 1400 personnel per 01015 Technical Requirements. The system will also require construction of sludge drying beds. The Contractor shall design and provide all necessary materials and labor to construct the treatment system. This may include installing new force mains, lift stations, chlorination system, and gravity lines.

The Contractor shall conduct a topographic survey to determine existing site characteristics. The Contractor shall conduct a utility survey to determine the locations of any nearby water lines, wells, sanitary sewers, storm sewers and electrical lines.

Geotechnical investigation of the proposed sewage treatment site is required, and the contractor shall design the sewage treatment system to be compatible with site and soil conditions.

The sanitary sewer collection system shall consist of gravity sewer pipe network and accessories such as manholes, cleanouts, and building service connections. The Contactor shall design a sanitary system layout following requirements of Section 01015 this contract. Pipe, fittings, and connections shall conform to the respective specifications and other requirements as listed in Contract Section 01015 and all of its referenced codes.

The gravity sewer collection system shall connect to the new aerated Waste Water Treatment system. This will require the use of lift stations and force main(s).Design will be per specifications provided in Section 01015.

The contractor shall design a gray water system for irrigation purposes. The system can utilize the existing pipe network for gray water.

4.6 **SITE ELECTRICAL DISTRIBUTION SYSTEM**

Current Power Plant is designed to support eight (8) 1 megawatt generators. Currently 6 of the 8 generator pads have a 1 megawatt generator installed on them and there are two (2) spaces available for two more generators.. The contractor shall utilize the two available generators spaces for this project. If more than two generators are required for this project, the contractor shall add the necessary generators pads, controls, and conduit. The existing generator house shall be expanded to house the generators for this project plus leave two spaces for future generators.

The contractor shall design and construct the entire electrical distribution system to include but not limited to: generator power plant, electrical distribution, fuel storage tanks, and connection to all new facilities, and construct connection to the existing system at the power plant and provide the additional generator(s).

The contractor shall design an electrical power system to supply and distribute power to all facilities included in the contract (including master planned future facilities) to include generation and fuel storage, and underground electrical distribution. All electrical design and installation shall meet NEC (NFPA 70) requirements. Conductors and circuits shall be sized for the specific loads. The site Primary power distribution shall be 15 KV, 50 Hz manhole duct bank system. The secondary voltage shall be 380/220 VAC, 50 Hz. Secondary power distribution shall be pad mounted transformer substations (PTS). Each PTS shall be a standard manufactured substation with a secondary distribution switchboard. Each substation switchboard shall have a secondary distribution circuit breaker for each facility, to include all future Master Planned facilities. The Contractor shall provide secondary distribution manhole or hand hole duct bank distribution system to each facility to be constructed, to include all future Master Planned facilities, from the PTS switchboard. The Contractor shall provide a 100mm conduit stubbed out from the closest manhole or hand hole (within the roadway right of way at the limits) for each future facility. The Contractor will not be responsible for the construction of service lines from Contractor installed distribution lines to future facilities. Each 100mm conduit shall have a pull string, be capped off, and have a duct bank marker above the conduit. All electrical design and installation shall meet NEC (NFPA 70) requirements. Electrical receptacles shall be provided as indicated in section in 01015, Technical Requirements. Conductors and circuits shall be sized for the specific loads. All wiring shall be run and pulled through conduits.

The contractor shall complete the Power system must be operational no later than 280 days from award. If the power system is not completed by this date, the contractor will be required to supply temporary power to the compound. Once permanent power is provided to all facilities provided with temporary power, the temporary power system shall be deconstructed and removed from the site.

4.8.1 **POWER PLANT GENERATORS:** Generator size is not to exceed 1MW (1,000kW). The generators shall be provided with a synchronizer-switch, so that when total power demanded from one generator reaches 90% of the generators maximum, an additional generator shall automatically start and supplement the running generators, sharing the load between the generators equally. Contractor shall provide the number of generators needed for this project. Generation shall supply 125% of the maximum calculated demand load for this project.

The new generators will be constructed in the existing power plant by expanding the existing power plant in such manner as to provide connection and load sharing with the existing generators.

4.7 GENERATOR BUILDING

Generator Fuel Storage. The work shall include the fabrication and installation of the entire fuel storage and distribution system. Tanks shall be skid mounted. Tanks of this type that have a capacity above 2640 L will be provided with either a dike or a spill containment system. The dike or spill containment system should have enough capacity for the entire contents of the tank, plus 10 percent. Provide a molded neoprene isolation pad to isolate an above-ground tank from the concrete pad underneath. Steel tank supports specifically are prone to encounter premature rusting due to constant exposure to moisture and their incompatibility with concrete. Tank shall be designed and manufactured for horizontal installation. Tank shall be mounted on the tank manufacturer's standard support skid. Skid shall span the entire length of the tank and shall separate the tank from the reinforced concrete slab by a minimum of 200 mm. Indicate on the drawings the number and size of each tank man way required. Tanks of 3,780 to 45,430 L to capacity will be provided with 760 mm diameter man ways. Tanks larger than 45,430 L will be provided with 915 mm diameter man ways. Tanks 3,780 L and larger will be provided with a minimum of1 tank man way to allow for internal tank access. Piping will not penetrate through access man ways. Tank shall be provided with a combination cleanout and gauge connection. Vent pipe sizing shall be not less than 32 mm nominal inside diameter. Vent shall be the rupture disc ty0pe calibrated to burst at 13.8 kPa pressure, and operate at 80 percent of burst setting. Tank shall be provided with an overfill alarm system. Tank shall be provided with 2 stick gauges graduated in m and mm. Stick gauge shall be of wood and treated after graduating to prevent swelling

or damage from the fuel being stored. Each storage tank shall be provided with an automatic analog reading gauge which is directly mounted to a tank'[s man way cover. Provide an in-0line centrifugal pump as part of the day tank package for fuel transfer from the bulk storage tanks to the day tank. Day tanks shall provide sufficient fuel for eight hours of generator operation without refill. Provide cathode protection for metal components. Storage tanks shall be handled with extreme are to prevent damage during placement and shall be installed in accordance with the manufacturer's installation instructions. Piping shall be inspected, tested, and approved before buying, covering, or concealing. Piping shall be installed straight and true to bear evenly on supports. Piping shall be free of traps, shall not be embedded in concrete pavement, and shall drain toward the corresponding storage tank. Any pipe, fittings, or appurtenances found defective after installation shall be replaced. Below ground nonmetallic pipe shall be installed in accordance with pipe manufacturer's instructions. Belowground piping shall be laid with a minimum pitch of 25 mm per 6 m.

External Fuel Fill Point: for each specific site, the contractor shall coordinate with the Resident Engineer and provide a fuel unloading point outside of the perimeter wall to facilitate transfer of fuel from the commercial fuel tanker to the bulk fuel storage at the Power Plant. This transfer shall include interconnecting piping and valves between the fuel point and the two bulk fuel storage tanks.

The generator fuel storage facility shall be located adjacent to the existing generator fuel storage facility.

4.8 LIGHTING

General lighting shall be provided as indicated and shall meet recommendations from IESNA for each building type and function within each building. Design and installation shall meet NEC 70 requirements.

Exterior lighting shall be kept to minimum illumination, except where exterior night work is required. Night time work areas include but not limited to Vehicle maintenance facilities, ECP, Arms Storage Facilities, DFAC loading and storage area, and volleyball courts.

Exterior lighting shall be high intensity discharge luminaries on 10 meter high minimum spun aluminum or galvanized steel poles. If to be installed on an existing installation, type of luminaries shall match existing predominant type within installation.

Searchlights shall be provided as indicated and shall be equivalent to the following:
- prison grade
- nickel reflectors (bullet resistant)
- 65 million candlepower (1000 watts)
- manual operation from below with one hand
- xenon lamp
- weatherproof design

4.11 GEOTECHNICAL

Existing geotechnical information is not available at the project site. Any site-specific geotechnical data required to develop foundations, materials, earthwork, and other geotechnical related design and construction activities for this project shall be the Contractor's responsibility. The Contractor shall develop all pertinent geotechnical design and construction parameters by appropriate field and laboratory investigations and analyses. The Contractor shall produce a detailed geotechnical report containing field exploration and testing results, laboratory testing results (particle sizes and distribution, liquid and plastic limit test, and moisture and density test, etc). Information in the report shall include, but not limited to: existing geotechnical (e.g. surface and subsurface) conditions, location of subsurface exploration logs on site plan, exploration point, allowable soil bearing capacity and foundations recommendations, bearing capacity, pavement design criteria (e.g. CBR values, K values), ground-

water levels, and construction materials (e.g. concrete cement, asphalt, and aggregates). All standards shall be based on the ASTM standards and under no circumstance shall any of the test and investigation be based on the DIN. For the Standard Penetration Test (SPT), it shall be based on ASTM D 1586-08. Two copies of the detailed geotechnical report shall be submitted to the Contracting Officer.

Foundations, including sub grade, shall be designed and constructed based on recommendations from geotechnical investigation required herein.

4.12 FORCE PROTECTION

Facilities shall be sited with FP design in mind. As much as possible and practicable FP designs shall be accomplished by appropriate stand-off distances and setbacks away from potential threats. Force Protection design shall be in accordance with section 1015, Technical Requirements. Force Protection Design shall include the following components:

- A complete Perimeter Fence with vehicular and pedestrian Access Gates
- Primary Entry Control Points (ECP)
  - Guard Houses
  - Guard Shacks
  - Active Vehicle Barrier
  - Passive Vehicle Barrier
  - Checkpoints
  - Rejection Lanes
  - Sliding Gates
  - Cable Lift Gates
  - Rolling Beam Barrier

- Guard Towers, (4) total, coordinate location with COR
- Compound Illumination System
- Security Communication System
- Loudspeakers and Alarm System

4.13 PERIMETER WALL (Option Item), FENCING, AND BARRICADES

Perimeter Wall and Fencing shall consist of the types shown or described herein and provided in drawings in the Appendix A. Refer Drawings for required types and locations. The estimated perimeter wall distance is 1.9 kilometers. This is only an estimate; the Contractor is responsible to verify all actual distances and dimensions. **The Perimeter Wall is an option item. If exercised, the perimeter wall must be completed before the perimeter fencing is to be removed unless otherwise coordinated with the COR.**

4.14 ROAD NETWORK, SIDEWALK, AND PARKING

The Contractor shall design and construct the entire road and parking network. The roads shall be gravel and designed to carry traffic of up to a **60** ton three-five axle vehicle at a minimum at least but not limited to : from main entry control point to all of the vehicle maintenance facilities, wash rack, fuel point, and motor pool parking areas. A storm drainage system shall also be included. The road layout shall provide access to entry control points, parking lots, vehicle maintenance facilities, fuel points, generator yard and the trash collection point. Contractor shall connect new road system to the existing installation road system. Contractor shall connect new road system to main road system outside of the compound service road from Main Entry Control Point. Provide compacted gravel parking areas for vehicles as listed in 4.21 Motor Pool.

Provide a **convoy assembly area accommodating 2 sets of vehicles parallel parked** at near approach to the main Entry Control Point. The Assembly area shall be graved at least 100 meters in length and at least 14 meters in width including road network.

Road design shall be designed per Section 01015, Technical Requirements. Roadways and sidewalks are required as shown on attached drawings and shall be designed and constructed based upon recommendations from geotechnical analysis as required herein.

The Contractor shall design and provide landscaping for the compound. Design and provide a network of concrete sidewalks to connect the buildings. Sidewalks shall be wide enough to be used as fire-lane or service roads. Provide outdoor benches, lighting, and gathering areas.

4.15 TRASH POINTS

The Contractor shall design and construct, in locations convenient for easy removal, six (6) trash collection points. It shall be located inside the compound walls. The trash points shall be a 1.8 m x 1.8 m concrete pad with a 1.8 meter tall chain link fence around the perimeter. One side shall have a 1.2 m wide gate entrance. Trash Points shall have a metal roof covering.

4.16 BARRACKS

Design and construct the barracks building(s) in accordance with the drawings contained in Appendix A. provide three (3) BOQ Officer/NCO barracks and provide six (6) Enlisted Open Bay barracks. Windows shall be extruded aluminum. Exterior doors shall be insulated hollow metal. Interior doors shall be hollow metal except PVC shall be used for interior doors at toilet, shower, and ablution rooms. Provide split pack air conditioning for the BOQ Officer/NCO buildings.

The Contractor shall incorporate the following special features into the barracks:

(a) Enlisted Open Bay, Provide Ceiling fans shall be designed for summer ventilation electrical base heaters for winter.

(b) Clotheslines shall be installed behind each barracks, approximately 5m in length with 4 lines across spaced 410mm apart and of sufficient strength to prevent sagging when all of the lines are loaded

(c) Concrete stoops with boot scrapper shall be provided at all exterior doors.

(d) At least one duplex power outlet every 4 m in open bay barracks. In the BOQ Officer/NCO, provide at least one per wall in bedrooms.

(e) Toilet/shower rooms shall be finished with ceramic tile from floor and ceiling, slope floor to drain.

Master Plan shall provide for future facilities at about the same ratio for ESB and FSD. Refer to 4.2 SITE PLANNING for population count of future expansion.

The contractor shall complete the Barracks facilities no later than 280 days from award. If barracks facilities are not completed by this date, the contractor will be responsible for providing temporary barracks facilities for the 700 soldiers. Temporary facilities must provide protection from the weather and be enclosed. Once the permanent facilities are turned over, the temporary facilities shall be deconstructed and removed from the site. Provide no less than 3 SM person in temporary sleeping quarters.

4.17 DFAC, Dining Facility and Storage Yard

Design and construct the 2204 SM DFAC in accordance with the drawings contained in Appendix A. Windows shall be extruded aluminum. Exterior doors shall be insulated hollow metal. Interior doors shall be hollow metal except PVC shall be used for interior doors at toilet, rooms. Include all the features listed in 4.17.1. This facility will provide for 500 seats with the capacity to provide up to 1000 seats.

This facility shall provide cafeteria-style feeding of short order and regular style meals. Spaces include dining areas and kitchen facilities outfitted with built-in liquid propane-burning stoves installed in accordance with manufacturer's instructions. Include all the features listed in 4.17.1.

4.17.1 The Contractor shall incorporate the following special features into the DFAC:

(a) The kitchen shall be physically separated from the rest of the dining facility with a 2-hour fire rated wall with 90 minute rated doors. At openings for serving line and dirty dish return provide 90 minute fire rated shutters. The contractor must provide a detail of the serving line counter and the dirty (soiled) dish return counter, to include heights, all dimensions, and size of opening.

(b) The backsplash and front and side surfaces of stove enclosures shall be terrazzo with heat resistant grout. The top of the stove enclosure shall be finished concrete. Edges will be covered by a [metal "L" angle] [rubber-like material "L" angle] to prevent damaging edges during pot movement. [Option – the backsplash can be of sheet metal if the designer feels adhesives & grouting for terrazzo tiles will not withstand normal usage]

(c) The height of the stove from the floor to the burners shall be 50cm

(d) The floor in front of the row of burner enclosures shall be slightly sloped towards the floor drain to direct water overflowing from pots or spigots near the pots away from the work area in front of the stove enclosures.

(e) New propane stoves shall be installed with consideration to ease of cooking operation and daily cleanup. New stoves shall be set into a formed concrete openings such that they can easily be removed for replacement, maintenance and cleaning. Stove dimensions are 72 cm long x 72 cm wide x 50 cm high. Height includes the grill. Desired stove to stove clearance is 72 cm.

(f) Each propane stove shall be provided with three burners. The propane stoves shall be of commercial quality and be capable of producing the highest BTU heat output with all three burners on. The center burner is low heat, center and middle burner is medium heat and all three burners is high heat. A shut off valve for each burner shall be provided at the face of the propane appliance.

(g) Propane storage tanks shall be provided and installed in accordance with NFPA 58. The propane storage tanks shall contain 15 days' supply and shall be installed on a concrete pad, and placed within a covered, secure enclosure to protect tanks from the elements. Provide an access gate for removal and replacement of propane tanks. The access gate shall able to be secured and locked. Propane tanks shall be secured such that none move or topple over.

(h) The Contractor shall coordinate with the DFAC staff and Contracting Officer in determining amount of propane fuel required daily for the DFAC. The propane fuel requirement shall be calculated based on consumption of fuel every cooking cycle, cooking frequency, and required "surge" capacity. The Contractor shall provide an agreed to amount of fuel tanks filled with propane fuel at time of project completion.

(i) Piping from propane tanks to their respective propane stoves shall be of wrought iron, ASTM B36.10M or steel (black or galvanized), ASTM A53. The steel piping shall terminate in front of the

propane stoves with a shut off valve and quick disconnect nipple. A stainless steel flexible hose (Gastite or equal) shall connect the propane stove to the steel piping per NFPA 58 section 5.8.6. Each end of the flexible hose shall be provided with quick disconnect dielectric fittings.

(j) Propane supply piping shall be installed in concrete trenches. Piping may also be surface mounted provided it is not susceptible to damage, or causes any safety hazards.

(k) Piping passing through the exterior wall shall be provided with pipe sleeves.

(l) Ventilation hoods

- Hoods shall be designed to capture and confine cooking odors, vapors, and residues.
- Hood exhaust rate shall be 400 cubic feet per minute per linear foot (CFM/ft) (620 L/s per m) of open hood.
- Hoods shall be constructed of 20 gauge stainless steel.
- Hoods shall be provided with a side panel at each end to close in the area between the stove and the hood. Side panels shall be the width of the hood and shall extend to the rear wall at 45 degrees. Approximate dimensions are 37 inches by 37 inches by 45 degrees (925mm by 925mm by 45 degrees). If a non-combustible wall abuts a stove, then a side panel shall not be required on that side of the hood.
- Joints, seams and penetrations shall be externally welded or brazed to form a watertight seal with a smooth surface that is readily cleanable.
- All surfaces shall be designed to be easily and thoroughly cleanable.
- Hoods shall be securely supported with non-combustible materials.
- Hoods shall extend a minimum of 9 inches (225mm) beyond the front edge of the stove and shall be installed a maximum of 4 feet (1200mm) above the surface of the stove.
- Hoods shall be sealed to the rear wall.
- The center hood of each bank of fans shall have one electrical switch on the front face to operate the exhaust and make-up air fans.
- Grease filters will not be required. Hoods shall be constructed so that grease filters can be installed at a later date.

(m) Ductwork

- Ductwork shall be protected against corrosion.
- Ducts shall be constructed of 18 gauge stainless steel.
- Supply and exhaust systems for each hood shall be independent of other duct systems.
- Joints and seams shall be continuously welded or brazed.
- Bracing and supports shall be constructed of non-combustible material securely fastened to the structure. Bolts, screws, rivets, and other fasteners shall not penetrate the duct walls.
- Airflow in the ductwork shall be not less than 500 feet per minute (150m/min).
- Ducts shall be placed a minimum of 18 inches (450mm) from combustible material or 3 inches (75mm) from gypsum wallboard attached to non-combustible structures.
- Ductwork terminating through the roof shall extend a minimum of 18 inches (450mm) above the roof.
- Where roof terminations are not possible, ducts may be terminated through an exterior wall. All ductwork terminating through an exterior wall shall be located a minimum of 3 feet (900mm) from exterior openings. Ductwork shall be pitched to drain back to hood.
- All ductwork terminations shall be a minimum of 10 feet (3000mm) horizontally from other buildings and property lines.

(n) Exhaust Fans

- Exhaust fans shall be located outside the airstream.
- Fan discharge shall not impinge on the roof, other equipment or appliances, or parts of the building.
- Discharge outlet of exhaust fans shall be a minimum of 40 inches (1000mm) above the roof.
- Up-blast fans shall be hinged and supplied with a flexible weatherproof electrical cable to permit inspection and cleaning.
- Connection between ductwork and exhaust fan shall be flanged, gasketed, and bolted.
- Each exhaust fan shall be electrically interlocked with its corresponding make-up air fan to prevent system operation without both fans in service.

(o) Make-up Air Fans

- Make-up air inlet locations shall take into consideration the prevailing wind direction and shall be placed upstream of exhaust outlets.
- Wherever possible, make-up air inlets shall be located a minimum of 10 ft (3m) from exhaust outlets.
- Where make-up air inlets are located within 10 ft (3m) of an exhaust outlet, the make-up air inlet shall be located a minimum of 3 ft (0.92m) below the exhaust outlet.
- Each make-up air fan shall supply a maximum of 110 CFM/ft (170 L/s per m) of perforated diffuser.
- Each make-up air fan shall be electrically interlocked with its corresponding exhaust fan to prevent system operation without both fans in service.

(p) Testing

- A performance test shall be conducted upon completion and before final acceptance of the system installation.
- The test shall verify the rate of exhaust and make-up air flow.
- The test shall be witnessed by the COR.]

(q) (not required for this contract).

(r) Floor trench drains shall be incorporated into the dining area with the floor sloped to drain.

(s) Trench type floor drains shall be installed in the kitchen cooking and dishwashing areas. Contractor must show details of the drains/gratings and must connect to an exterior grease trap/

(t) Hand wash stations in the entry vestibule shall be provided. Trough type sinks shall be used.

(u) Install several large wash basins with a low rim height designed for washing very large pots at the ratio of one pot wash per two stoves.

(v) Run water lines to and install wall mounted spigots next to each cooking station in order to permit pots to be filled during cooking without having to move them..

(w) The Contractor shall provide and install walk-in refrigerators and wall-in freezers as shown in drawings.

(x) Fire protection is to be provided by fire extinguishers throughout the facility at easily accessible locations.

(y) Install wall mounted forced air electric heaters to provide heat throughout the dining area.

(z) The Contractor shall design and construct a chain-link fenced storage yard for food and install facilities for the storage of both dry goods and refrigerated items.

(aa) Provide Latrines for facility workers

(bb) Provide Janitor room with Mop sink

(cc) Provide Office space for minimum two personnel

(dd) Provide dining areas for officers and enlisted

(ee) Provide Dish washing area

(ff) Provide Food preparation area

(gg) Provide Serving area

(hh) Provide fenced in Dry storage yard area adjacent to DFAC

(ii) Grease Separator shall be a hydro-mechanical model as defined in Standard PDI G101, revised 2007.

(jj) Provide ducted package heat pump system for heating and cooling, and ceiling fans for air circulation.

The contractor shall complete the DFAC facilitiesno later than 280 days from award. If DFAC facilities are not completed by this date, the contractor will be responsible for providing temporary DFAC facilities for the 700 soldiers; sit-down dining facilities will not be required for temporary DFAC facilities. Temporary facilities must provide protection from the weather and be enclosed. Once the permanent facilities are turned over, the temporary facilities shall be deconstructed and removed from the site, including any temporary utilities required.

4.18 BATTALION HQ ADMINISTRATION BUILDING

The Contractor shall design and construct one (1) Battalion HQ Administration facilities at ***350SM*** for the CSB in accordance with the drawings contained in Appendix A.

(c) No office space is required for the Low ordinary ranking personnel.

(d) Provide conference rooms, file rooms, storage areas, restrooms, break areas, and other special spaces in the building in addition to the net area.

(e) Near the Commander's office provide a conference room equipped with a large conference table for 12 at conference table and seating of 40 personnel total in room.

(f) Provide 100 meter x 100 meter Parade ground located near the Battalion HQ Administration Building. No grass or extra landscaping needed. Elevate and grade the grounds to ensure the site drainage does not erode the field.

(g) All corridors (for this building and all facilities within the scope of this project) must be one hour fire rated with 20 minute fire doors. No doors in the corridor shall have glazing. Panic hardware on exterior doors is not required except for conference rooms. Storage room and utility rooms

require one hour fire rated walls with 45 minute rated doors. Toilet and utility room shall have door louvers for ventilation. All interior stairs must be enclosed by a one hour fire rated wall with 45 minute rated fire doors.

The Master Plan shall provide space for one additional future HQ Administration Building (ESB).

4.19.1 TOILET/SHOWER/ABLUTION/LAUNDRY FACILITY

Design and construct a 466SM toilet, shower, ablution, and laundry building in accordance with the drawings contained in Appendix A. Windows shall be extruded aluminum or extruded PVC. Exterior doors shall be insulated hollow metal. Interior doors shall be hollow metal except PVC shall be used for interior doors at toilet, shower, laundry, and ablution rooms. HVAC system requirements: refer to 1015.

The Contractor shall design and construct a toilet, shower, ablution, and laundry building. Plumbing fixtures shall be provided in accordance with the International Plumbing Code. Latrines for LN residents shall be eastern-style units and installed to face North and South. The Contractor shall incorporate the following special features into the building:

(a) All eastern style toilets shall be provided with a wall-mounted hose bib on the right side of the occupant as he faces the stall door.

(b) All sinks shall be trough type constructed of block and concrete with ceramic tile exterior and lining capable of withstanding abuse.

(c) Shower stalls shall be large enough to allow room to dress and undress between an outer and inner shower curtain. no less than 2 m x 1.5 m and shall have a solid door on the outside.

(d) Showers shall contain a single mixing valve for hot and cold water mixing and a wall mounted shower head.

(e) Abolution area shall be trough type, constructed by depressing slap 200mm out to 600mm from wall mounted faucets. Finish for trough shall be sealed concrete.

(f) The laundry room shall have concrete trough sinks capable of withstanding abuse. [Size of basins shall be approximately 600mm wide x 600mm long x 350mm deep.]. Provide clothes line for drying outside the building.

(g) Electric hot water heaters shall be installed to provide hot water to the showers and sinks.

(h) Electric cabinet heaters or electric unit heaters suitable for wet areas shall be utilized to provide heat in the facility.

(i) The building shall be constructed with exhaust fans to ventilate steam to the outside environment and, where required, insulated piping to prevent freezing of water pipes in winter.

(j) All exposed water supply plumbing galvanized metal. PVC may be used where water supply piping is concealed.

(k) Accessories shall include but not limited to; toilet paper holders, soap dishes, curtains and curtain rods, robe hooks, mirrors, paper towel dispenser, metal shelf, and grab bars.

The contractor shall complete the Toilet/shower/ablution/laundry facilities no later than 280 days from award. If toilet/shower/ablution/laundry facilities are not completed by this date, the contractor will be responsible for providing temporary toilet/shower/ablution/laundry facilities for the 700 soldiers. The

contractor will also be responsible for handling all wastewaters from all facilities if wastewater collection system is not in place to handle flows. Once the permanent facilities are turned over, the temporary facilities shall be deconstructed and removed from the site, including any temporary utilities required. Provide latrine and showers at temporary facilities at ratio of 1:40.

4.20 VEHICLE RE-FUELING POINT

The Contractor shall design and construct a low profile vehicle re-fueling point, as specified in Section 01015, capable of storing 20,000 liters (5283 gallons) of diesel and 10,000 liters (2641 gallons) of MOGAS. The Contractor shall provide a full supply of fuel to the tanks at the time of turnover to the Government. Vehicle Re-Fueling Point shall have a metal roof covering. Provide explosion proof lighting and control.

4.21 MOTOR POOL GRAVEL PARKING

The Contractor shall design and construct unit vehicle parking area to accommodate:

- Provide GOV parking adjacent to or near CSB Organic Large Vehicle Maintenance for 30.
- Provide GOV parking adjacent to or near CSB Organic Vehicle Maintenance for 30.
- Provide GOV parking adjacent to or near General Vehicle Maintenance for 150.
- Provide GOV parking at CSB Motor Pool for 382 Trucks and 248 Trailers.
- Provide GOV parking at ESB Motor Pool for 266 Trucks and 72 Trailers
- Provide POV parking adjacent to or near Battalion HQs Admin for 10.
- Provide POV parking adjacent to or near Barracks for 40.

GOV parking spaces shall be 4 x 8 meters, and POV parking spaces shall be 3 x 6 meters.

Security fencing with gates shall be provided around the Vehicle Maintenance Facilities and GOV parking areas.

Contractor shall provide design of parking area using the design vehicle loading above and based on geotechnical recommendation.

4.22 CSB ORGANIC VEHICLE MAINTENANCE FACILITY (9 Double Bays)

Design and construct the Vehicle Maintenance facility in accordance with the drawings contained in the Appendices (approximate size is 1680 SM). Windows shall be extruded aluminum. Exterior doors shall be insulated hollow metal. Interior doors shall be hollow metal except PVC shall be used for interior doors at toilet, shower, and ablution rooms. Provide forced air electric space heaters for heating, and ceiling fans for air circulation.

The Contractor shall design and construct Vehicle Maintenance Facility incorporating 18 vehicle maintenance bays to support 630 CSB and 360 ESB logistic Support vehicles with maximum size of 42' long x 12' wide (7.7m long x 3.7m wide). The Vehicle Maintenance Facility shall have a concrete foundation and concrete floor to support a minimum loading of a 3-axle, 30,000 kg vehicle without failing. Concrete will be floated for a smooth finish. Floor will be slightly sloped toward the front to the garage to facilitate drainage. There will be a concrete ramp from the outside into the garage area. The roof structure shall be a hip or gable minimum 2:12 slope roof consisting of steel columns, steel beams, metal hat channels and corrugated roof panels. The clear distance between the finished floor and the bottom of the roof structure shall be no less than 8m (26' – 3"). Garage doors shall be minimum 5m high by 5m wide**,** manual metal overhead coiling style, drums to interior side and designed to resist wind loads and installed with wind locks. The maintenance bay area must be separated from other areas of

the facility by a two hour fire rated wall with 90 minute fire rated doors. ***Overhead Bridge Cranes are not required and shall be removed from the provided design.***

Contractor shall provide concrete handstand apron outside all garage doors at minimum 10 meters width. Concrete handstand apron shall support a minimum loading of a 3-axle, 30,000 kg vehicle without failing. There shall be at least 18 meters clear distance around the vehicle maintenance facility before any parking or between any other facilities.

Provide 1.5cm diameter x 1.0m high concrete filled steel bollards to protect jams of roll-up doors. The service pit will be constructed into the floor with interior dimensions of 1.m wide, 6.0m long and 1.2m deep. The pit will be centered on an imaginary line that runs from the center of the garage door opening to the rear-most corner, opposite of the doors. The pit will have a lip around its entire perimeter, such to prevent small items from falling in. Removable covers will be designed to cover the pit when not in use. Steel grating will be rated for HS 20 loading or covers designed for a minimum point load of 5000 kg without deforming. Removable covers will weight no more than 30-kg. a piece and have a handle designed into it to facilitate removal. The handle will lay flat when not in use.

Mechanical: Provide an overhead vehicle tailpipe exhaust removal system. Coordinate the location of the system such that it does not interfere with vehicle access and that the exhaust hose will connect to the vehicle exhaust tail pipe. Provide a low pressure (less than 862 KPa) compressed air system to include air compressor, piping, hose reel, and hose. Locate air compressor outside and to the rear of the building. Coordinate location of hose reel and hose such that it will not conflict with vehicle access and such that hose will easily access the maintenance bay. Provide emergency eye-wash stations every other two bays on both sides, alternate sides.

Electrical: Provide switched lighting that will illuminate the entire area. Lights will be capable of operating in the year-round temperature ranges expected to occur in this area. Electrical receptacles will be installed, equally spaced, with three receptacles on the all walls. Provide receptacles on the garage door walls for drop lights and other electrical power tools. Receptacles may be grouped together but will have dedicated circuits and will be configured to draw no more than 16 amperes. One dedicated circuit will be installed for the use of a 10.5 kg/sq cm (150 psi) electric air compressor. Provide charging outlets in Battery Room every 500 mm along back wall.

Revise the battery room(s) configuration to meet the standard battery room require provided in the Appendix A.

Provide Tool rooms, Toilets, janitor rooms, office spaces, battery storage room with emergency eye wash station, tire room, and equipment storage.

Only provide floor trench drains in the Toilet rooms. Do not provide any floor drains in the vehicle maintenance bays.

4.23 COMMUNICATION SYSTEM BUILDING

Design and construct the 375 SM Communication building in accordance with the drawings contained in Appendix A. The facility will serve as the installation's center for telecommunications, switching, and automation networking (including internet service) and shall have year-round climate control in all rooms for the sensitive electronic equipment. Provide ductless split pack heat pumps for heating and cooling, and ceiling fans for air circulation. Windows shall be extruded aluminum. Exterior doors shall be insulated hollow metal. Interior doors shall be hollow metal except PVC shall be used for interior doors at toilet rooms.

Power to the building shall meet the ultimate demand load plus 25% spare capacity, but shall not be less than a 250 amp service. A grounding grid tested to 5 ohms or less shall be distributed throughout the UPS and equipment rooms. Uninterruptible power supply (UPS)/Battery room shall have ventilation to

outdoors. The UPS/Battery room shall house a UPS that will be capable of providing power to the critical building loads for ten minutes while the emergency generator is started. The critical loads are equal to 60% of the total building load.

Provide a 3m x 5m roof covered concrete pad outside the UPS room with a backup generator with an adjacent 2m x 3m concrete pad with a spill dike for a 500 gallon or larger fuel tank. Backup generator shall be sized to meet the ultimate demand load of the communications building, plus 20% spare capacity. A 15 cm diameter or larger conduit shall connect the generator pad to the UPS room and shall use long sweep elbows totaling no more than 180 degrees for any bends. Backup generator for Communications building shall be provided. When sizing the generator, ensure it is de-rated for altitude and temperature in accordance with the manufacturer's recommendations for the site conditions. Provide
an Automatic Transfer Switch (ATS) with the emergency generator to transfer from utility power to generator power. At loss of power the generator shall start and the ATS shall automatically transfer load to the generator.

The communications room A/C shall be sized to accommodate eight (8) personnel with eight (8) computers and twelve (12) radios. The communications room shall have raceways/duct banks going to each facility requiring communications. Communication duct will be run to future building locations on the site plan and duct will have a pull sting. All voice telephone wiring, data and emergency wiring, including any planned or future fiber optical runs, will originate and/or terminate in this communications room.

Design a Communications Building and installation wiring system. All buildings shall have a communication room, sized in accordance with TIA/EIA 569A, to house all telephone and computer network equipment. All distribution boxes shall be routed to the communications room.

Install four (4) 50mm conduit passing from the communications room to the roof of the building. The roof penetration shall have a weatherproof box on top and shall be flashed or patched as necessary to prevent water leakage. The four (4) 50mm or larger communication conduits shall be typical with the following installation criteria: Manhole or hand-hole systems shall have no more than 150 meters between access points. Per NEC Code, there shall not be more than 3 bends per run of conduits. The radius bends shall be between 609mm to 914mm radius bends.

4.24 GSE COMMUNICATION AND ARMAMENT MAINTENANCE FACILTY

Design and construct approximately 4475 SM GSE Communications and Armament Maintenance Facility in accordance with the drawings contained in Appendix A. Windows shall be extruded aluminum. Exterior doors shall be insulated hollow metal. Interior doors shall be hollow metal except PVC shall be used for interior doors at toilet, shower, and ablution rooms. The facility shall be completely enclosed by a 1.83 meter high chain-link fence topped with barbed wire outriggers that extend .46 meter above the height of the fence with a lockable, gated opening a minimum of 3.66 meters in width. The fence shall be a minimum of 10 meters from the facility. Provide an access road from the gate to the nearest road. Provide and install air conditioning in all offices for the facility and heat and ventilation for the remainder of the facility. Provide emergency eye-wash stations every other bay. Only provide floor trench drains in the Toilet rooms. Do not provide any floor drains in the vehicle maintenance bays.

Contractor is required after award to coordinate, setup, and facilitate design charrette with PM, CSTC-A customer, and COR within 15 days after NTP to design this GSE Communication and Armament Maintenance facility. Design charrette shall take place at the USACE HQ Qalaa House Compound in Kabul, unless otherwise changed to the Herat USACE office by the COR.

4.24.1 Design and construct the approximately 740 SM Communications Maintenance Facility within the GSE Facility. The interior of the facility shall be divided into distinct areas including, but not limited to, Office and Conference Space, COMSEC repair and Storage, VHF Repair, HF Repair,

Automation/Power Management Repair, Storage areas, and restroom facilities. All rooms entrance shall have single doors, unless otherwise noted. Provide wood work benches in all repair rooms. Outlets at work benches must have emergency shut off switches installed. Provide split pack air conditioning units for heating and cooling, and ceiling fans for air circulation.

Communications Maintenance Area

The Communication functions shall consist of the following areas;

1. VHF Office: 74 SM
2. HF Office: 74 SM
3. ComSec Repair and Storage: 142 SM
4. COMSEC Storage: 46 SM
5. Janitor Closet 2.5 SM
6. Toilets 22 SM
7. CMDR Office: 18 SM
8. Admin Office: 28 SM
9. Conference Room: 28 SM

4.24.2 Design and construct the approximately 1200 SM Armament Maintenance Facility within the GSE Facility. The interior of the facility shall be divided into distinct areas including, but not limited to, Office space, Tank Turret Repair/Reactive Weapons Space, Artillery Repair Space, Weapons Storage, Weapons Cleaning and Bluing Spaces, Small Arms Repair, and restroom facilities. All offices shall have a single door. All Storage shop, maintenance, and mechanical spaces shall have double doors (except for Weapons Storage which shall have a single door). Provide and install two (2) exterior roll-up doors with a minimum size of 6.1 meters high and 4.57 meters wide in the Tank Turret Repair/Reactive Weapons Space. Provide and install one (1) exterior roll-up door with a minimum size of 6.1 meters high and 4.57 meters wide in the Artillery space. Construct Loading Dock with a minimum width of 10 meters and a depth of 3 meters adjacent to the Supply/ Receiving area. Provide concrete handstand in front of the roll-up doors at least 8 meters width and the entire distance of the Armament Maintenance facility.

Armament Maintenance Area

The Armament Maintenance functions shall consist of the following areas;

1. Weapons Storage: 100 SM
2. Weapons Cleaning: 100 SM
3. NCOIC Office: 18 SM
4. Janitor Closet: 2 SM
5. Toilet: 25 SM
6. Turret Artillery Room with Loading Doct: 400 SM minimum
7. Small Arms Repair Room with Receiving: 400 SM minimum

4.24.3 Design and construct the approximately 1665 SM Services Division Facility within the GSE Facility. The interior of the facility shall be divided into distinct areas including, but not limited to, office and Conference Spaces, Welding/Machine Shop, Metal/Body Shop, Paint Shop, Direct Exchange, and restroom facilities. Provide and install four (4) exterior roll-up doors with a minimum size of 4.57 meters high and 3.66 meters wide in the Welding/Machine Shop (Welding/Machine Shop shall include the Metal/ Body Shop with two (2) exterior roll-up doors. Provide two (2) exterior roll-up doors with minimum size of 4.5 meters by 3.66 meters wide in the Direct Exchange area.
Provide fur (4) exterior roll-up doors in the Paint Shop. Minimum size of roll-up doors shall be 3 meter high and 2.4 meters wide. Provide one (1) 6.1 meter by 18.3 meter paint booth in the Paint Shop workspace. Provide for Class 1 Div. 1 explosion-proof lighting and receptacles, proper vapor containment and adequate ventilation.

Services Division Area

The Services functions shall consist of the following areas;

1. Paint Shop:400 SM minimum

2. Storage: 120 SM
3. Direct Exchange: 150 SM
4. Office 28 SM
5. Machine Storage: 100 SM
6. Office 25 SM
7. OIC Office 14 SM
8. NCOIC Office 21 SM
9. Office 28 SM
10. Toilet 25 SM
11. Break room: 40 SM
12. Welding/Machine Shop 800 SM minimum

4.24.4 Design and construct the approximately 870 SM Precision Measurement Equipment Laboratory (PMEL/TMDE) within the GSE Facility. The interior of the facility shall be divided into distinct areas including, but not limited to, offices, Calibration and Repair Space, Technical Library, Cleaning room, shipping/Receiving, and restroom facility. Provide one (1) exterior roll-up door with a minimum size of 2.5 meters high and 3 meters wide. And canopied or covered vehicle access into the Shipping/Receiving space. Provide air lock entrance to the Calibration room.

The PMEL/TMDE functions shall consist of the following areas;

1. Shield Room: 20 SM
2. Equipment Storage: 20 SM
3. Mechanical Room: As required
4. Utility Room: As Required
5. Calibration room: 320 SM
6. Shipping & Receiving Area: 150 SM
7. Air Locks: As required
8. TMDE Chief Office: 15 SM
9. Asst TMDE Office 9 SM
10. TMDE Supervisor / Driver : 18 SM
11. TMDE Supervisor/NCO: 15 SM
12. PC Chief: 10 SM
13. Technical Library: 20 SQ
14. Janitor Room: 8 SM
15. Toilet Room: 20 SM
16. Cleaning Room: 14 SM
17. Conference/ Break room 25 SM

4.25 POL STORAGE BUILDING.

Design and construct a 25SM POL storage building in accordance with the drawings contained in Appendix A. Windows shall be extruded aluminum. Exterior doors shall be insulated hollow metal. Provide forced air electric space heaters for heating and ceiling fans for air circulation.

4.26 GENERAL WAREHOUSE STORAGE

Design and construct 800SM general warehouse building(s) in accordance with the drawings contained in Appendix A. Windows shall be extruded aluminum. Exterior doors shall be insulated hollow metal. Interior doors shall be hollow metal. Provide forced air electric space heaters for heating and ceiling fans for air circulation. The separation between the office area and warehouse area must be two hour rated construction with 90 minute fire rated doors.

4.27 ARMS STORAGE BUILDING

Design and construct the 350 SM arms storage building in accordance with the drawings contained in Appendix A. Exterior doors shall be heavy duty steel security grade. Provide wooden racks for storing long-arm weapons vertically. Racks shall not be furnished with locking bars. The facility shall be of solid reinforced concrete (200mm thick concrete roof slab and solid CMU wall) with no windows, high security door, and explosion-proof lighting. The Contractor shall provide power outlets in walls no more than 4 m apart. Concrete stoops shall be provided at all exterior doors. Wall mounted electric forced air AC units shall be used to maintain a minimum temperature of 18 degree Celsius during winter and maximum 30 degree Celsius during summer. The floor is smooth concrete finished with gray colored floor paint, walls, and ceilings flat paint finish.

4.28 VEHICLE WASH RACK

Design and construct 1292 SM Vehicle Wash Rack in accordance with the drawings contained in Appendix A, and UFC 4-214-03, Central Vehicle Wash Facilities.

Design and construct new pull thru concrete wash facility capable of servicing 10 vehicles at one time. Each wash bay shall have an independent water hose connection that is of a freeze proof design connected to the nearest potable water source. The water source piping shall be sized to adequately support 10 bays in simultaneous operation. The Contractor shall design for adequate water pressure and flow rate as measured at the nozzle (75 psi and 25 gpm, per UFC 4-214-03, paragraph 4-8 (c)) to properly support wash facility operation. A pressure booster pump may be required and this shall be included in the contractor's proposal along with the proper pump enclosure to protect the pump from the elements. The facility shall be sized and capable of accommodating and to support a minimum loading of a 3-axle, 30,000 kg vehicle without failing. Each wash facility will be separated by a CMU partition. Each wash bay shall be minimum 7.6 meters wide and 7.6 meters high to allow adequate personnel access during washing operations. The wash facility shall not be inclined but rather be built on an elevated pad above the surrounding grade to prevent flooding by surface water runoff.

Each bay will have a separate drain that connects to a common drain pipe that is sized adequately to carry the waste water without blockage. A gravity fed oil/water separator shall be installed in a way that would allow periodic draining and maintenance. Each floor drain shall have a cover or grate that will prevent drain blockage cause by debris getting into the drain pipes. Drain pipes shall be extended away from the facility an adequate distance to prevent water saturation of the soil around the facility. Drain pipes will terminate into natural watercourses or ditches/drains formed during the construction of the wash facility. All drains shall have an adequate number of clean outs placed to facilitate maintenance. Contractor shall design and construct recirculation system for wastewater re-usage. Refer to the UFC 4-214-03 Central Vehicle Wash facilities for recirculation system to include but not limited to: Wash Facility, Sediment Basin, Equalization Basin, Dosing Tank, Intermittent Sand Filter, Water Quality Testing Value, Water Supply Basin attached to Makeup Water supply. Provide smooth concrete floor for the entire facility with broom finish.

All concrete shall be reinforced with rebar and shall be 5-7% air entrainment. Concrete surface finishes shall provide traction for pedestrians and vehicles. A concrete apron a minimum of **10 meters in width** extending the full length of the building shall be constructed on the entrance and exit of the wash facility. The wash facility apron on the entrance and exit shall be pitched to drain water away from the entrance and exit of the facility.
All exposed piping shall be pitched to drain any standing water to prevent freezing, be capable to self draining or be of the freeze proof yard hydrant design. The potable supply line to the wash rack shall have a shut off valve that is clearly marked and protected from damage, flooding by surface runoff water and freezing.

Site grading will be necessary to connect the proposed wash facility location to the nearest existing street or roadway. Design and construct 10 meter wide aggregate by-pass road to the nearest street or roadway.

Provide bay length trenches and secondary trenches across door openings. Provide adequate wash bay ventilation to avoid condensation damage to building materials. Adjacent to the facility provide a Vacuum/Trash Island with three (3) permanent, outdoor, wet/dry vacuums, two (2) trash receptacles, and concrete stanchions to prevent vehicular damage to the equipment on the island. The exterior of the building shall include an adjacent parking area designed to accommodate two (2) trucks with low-boy trailers, two (2) large wheeled vehicles, and six (6) standard wheeled vehicles. There shall be adequate spacing around the Vacuum/Trash Island to simultaneously provide parking for one (1) large wheeled vehicle, and three (3) standard wheeled vehicles. An access road shall connect from the nearest road to the exterior roll-up doors at each Washing Station and the Vacuum/Trash Island.

Provide ditches and culverts along the wash facility location and entrance road as required to provide proper drainage of wash water. The ditches shall be sized to prevent erosion. At a minimum, bottom and side slopes of the ditches shall be lined with an average 150mm compacted or mortared aggregate (angular stone). The outlet from the ditch shall also be sized to prevent erosion. All calculations shall be clearly documented in the design analysis.

4.29 MWR GYM (OPTION ITEM)

Design and Construct a total 300 SM multi-use athletic facility/gymnasium and meet the following requirements:

Provide 4 entries (including a double access door all with emergency push bars (panic hardware) and kick plates (one entry in each corner of the facility).
Provide smooth concrete floor finish for the entire gym facility. Provide Rubber matting (moveable mats) for the Free Weight Area. Provide multiple purpose storage room. The interior of the building shall column free. Provide split unit heat pumps for heating, and cooling, and exhaust fans for air ventilation.

(2) Outside Volleyball Courts: Provide sand volleyball courts. Provide and install permanent pole sleeves, with removable tennis, and volleyball court poles and nets.

4.31 GENERAL NON-ORGANIC VEHICLE MAINTENANCE FACILITY (9 Double Bays)

Design and construct two (2) 1680 SM vehicle maintenance facility in accordance with the drawings contained in Appendices. The Contractor shall design and construct the Vehicle Maintenance Facility building incorporating 9 vehicle maintenance bays. Refer to 4.22 for other requirements and drawings.

4.32 GENERAL NON-ORGANIC VEHICLE MAINTENANCE FACILITY – 9 Double Bays (OPTION ITEM)

Design and construct a 1680 SM vehicle maintenance facility in accordance with the drawings contained in Appendices. The Contractor shall design and construct the Vehicle Maintenance Facility building incorporating 9 vehicle maintenance bays. Refer to 4.22 for other requirements and drawings.

4.33 SECURITY BUILDING

Design and construct the 320 SM security administrations building in accordance with the drawings contained in Appendix A. The building shall include:

- One (1) Conference Room
- Six (6) Private Offices
- Two (2) Open Offices

- One (1) Toilet Facility includes 1 enclosed Western and 1 enclosed Eastern toilet each, 2 handwash sinks, and 2 urinals

Exterior doors shall be heavy duty steel security grade. The Contractor shall provide power outlets in walls no more than 4 m apart. Concrete stoops shall be provided at all exterior doors. Wall mounted split package electric forced air AC/Heat units shall be used to maintain a minimum temperature of 18 degree Celsius during winter and maximum 30 degree Celsius during summer. Finish flooring to be tiled and interior wall to be painted.

4.35 BUNKERS

The contractor shall construct eight (8) 5ft x 5ft x 20 ft (1.52 m x 1.52 m x 6.09 m) x 6 inches (15 cm) thick in accordance to the Culvert Bunker drawings in the Appendix A. The actual size of the culvert will be dictated by local availability. The bunker shall be constructed from steel-reinforced culvert sections with overlapping sandbags and covered with heavy duty plastic covers.

5.0 COMPLETION OF WORK

The total design/construction period will be 365 calendar days. The project is phased as outlined below. Items denoted as “PRIORITY” should take precedence in the design and construction period.

Work Items to be completed no later than 365 calendar days after NTP:
Base Bid

- Design Cost, Site Survey, and Master Plan
- As-Built Drawings
- Mobilization, Demobilization, and General Site Work

  - Potable Water Supply System (PRIORITY)
  - Sanitary Sewer Collection and Treatment System (PRIORITY)
  - Site Electrical Distribution System
  - Perimeter Fencing
  - Primary Entry Control Point
  - Guard Towers
  - Road Network and Sidewalk
  - Trash Collection Points
  - Officer Barracks with *Toilet/Shower/Ablution* (PRIORITY)
  - Enlisted Barracks (PRIORITY)
  - Dining Facility (DFAC) and Dry Storage Yard (PRIORITY)
  - Battalion Headquarters Building/ Admin (partial Design Available)
  - Toilet/Shower/Ablution/Laundry Facility (PRIORITY)
  - Vehicle Refueling Point
  - Motor Pool Gravel Parking
  - CSB Organic Wheeled Vehicle Maintenance Facility (9 Double Bay) (partial Design Available)
  - Communication Building (partial Design Available)
  - GSE Communication and Armament Maintenance Facility
  - POL Storage Building (partial Design Available)
  - General Warehouse Storage (partial Design Available)
  - Arms Storage Building (partial Design Available)
  - Vehicle Wash Rack
  - General Non-Organic Wheeled Vehicle Maintenance Facility - Two (9 Double Bay) (partial Design Available) (refer to 4.22 drawings)
  - Security Building
  - Install Water Meter and Hose Bibb at Main Water Well (9.5 km to the north)

- Water system analysis (including existing well) supporting the ANA Brigade
- Bunkers

4.1.2.1 Option Items

-
- Road Network – Asphalt Paving of Interior Roads
- Perimeter Walls
- General Warehouse Storage (partial Design Available)
- MWR GYM and outside volleyball courts
- General Non-Organic Wheeled Vehicle Maintenance Facility (9 Double Bay) (partial Design Available) (refer to 4.22 drawings)

6.0 SPARE PARTS

Refer to other sections herein for requirements.

7.0 REFERENCES

Refer to Section 01015 for required references.

-- End of Section --

SECTION 01015

TECHNICAL REQUIREMENTS – DESIGN/BUILD

1.0 GENERAL

1.1 COMPLIANCE

The Contractor's design and construction must comply with technical requirements contained herein. The Contractor shall provide design and construction using the best blend of cost, construction efficiency, system durability, ease of maintenance and environmental compatibility.

1.2 MINIMUM & ALTERNATE REQUIREMENTS

These design and product requirements are minimum requirements. The Contractor is encouraged to propose alternate design or products (equipment and material) that are more commonly used in the region; will be equally or more cost effective or allow for more timely completion, but furnish the same system safety, durability, ease of maintenance and environmental compatibility. The Contractor will be required to submit information as requested by the Contracting Officer to make a comparison of the proposed alternate. All variations of approved designs must be approved by the Contracting Officer.

1.3 ASBESTOS CONTAINING MATERIALS

Asbestos containing material (ACM) shall not be used in the design and construction of this project. If no other material is available which will perform the required function or where the use of other material would be cost prohibitive, a waiver for the use of asbestos containing materials must be obtained from the Contracting Officer.

1.4 SAFETY

1.4.1 Unexploded Ordnance (UXO)

1.4.1.1 UXO/Mine Discovery during Project Construction

It is the responsibility of the Contractor to be aware of the risk of encountering UXO and to take all actions necessary to assure a safe work area to perform the requirements of this contract. If during construction, the contractor becomes aware of or encounters UXO or potential UXO, the contractor shall immediately stop work at the site of encounter, move to a safe location, notify the COR, and mitigate any delays to scheduled or unscheduled contract work. Once the contractor has informed the COR, the contractor will await further direction. The Contractor assumes the risk of any and all personal injury, property damage or other liability arising out of or resulting from any Contractor action taken hereunder.

NOTE: For previous UXO/mine information, the following points of contact from the UN Mine Action Center of Afghanistan are provided:

Mohammad Sediq, Chief of Operations, Email: sediq@unmaca.org Cell: +93 070 295207	Hansie Heymans, Chief Information Officer, Email: hansie@unmaca.org Cell: +93 070 294286

1.4.1.1 Explosives Safety

1.4.1.1.1 General Safety Considerations

General safety considerations applicable to personnel, both essential and non-essential, at project sites where UXO may be encountered include:

a. Do not carry fire or spark-producing devices.

b. Do not conduct explosive or explosive-related operations without approved procedures and proper supervision and UXO safety support.

c. Do not become careless by reason of familiarity with UXO or the reported probability level of UXO contamination.

d. Do not conduct explosive or potentially explosive operations during inclement weather.

e. Avoid contact with UXO except during UXO clearance operations.

f. Conduct UXO-related operations during daylight hours only.

g. Employ the "buddy system" at all times.

1.4.1.1.2 Activity Hazard Analysis (AHA) briefings

a. Activity Hazard Analysis's shall be prepared in accordance with the Corps of Engineers Safety and

Health Requirements Manual, EM 385-1-1.

b. Hazard analyses will be prepared and briefed by personnel that are knowledgeable in UXO and explosives safety standards and requirements. These personnel should understand the specific operational requirement and hazard analysis methodologies. A hazard analysis will be performed for each activity to determine the significance of any potential explosive-related hazards. Explosive residues may be discovered or exposed during UXO operations in the form of powder or various granular and powder based pellets. These contaminants can enter the body through the skin or by ingestion if proper personal hygiene practices are not followed. Explosive fillers such as white phosphorus are dangerously reactive in air and acute exposure can result in serious injury to the skin, eyes, and mucous membranes. They are also a fire hazard.

Safety requirements (or alternatives) that will either eliminate the identified hazards, mitigate or control them to reduce the associated risks to an acceptable level will be developed. The adequacy of the operational and support procedures that will be implemented to eliminate, control, or abate identified hazards or risks will then be evaluated and a second risk assessment completed to verify that a satisfactory safety level has been achieved.

1.4.1.2 Notification of Noncompliance

The Contracting Officer will notify the Contractor of any detected noncompliance with the foregoing requirements. The Contractor shall take immediate corrective action after receipt of such notice. Such notice, when delivered to the Contractor at the work site, shall be deemed sufficient for the purpose of notification. If the Contractor fails or refuses to comply promptly, the Contracting Officer may issue an order stopping all or part of the work until satisfactory corrective action has been taken. The Contractor shall make no part of the time lost due to such stop orders the subject of claim for extension of time or for excess costs or damages.

1.5 LIMITATION OF WORKING SPACE

The Contractor shall, except where required for service connections or other special reason(s), confine his operations strictly within the boundaries of the site. Workmen will not be permitted to trespass on adjoining property. Any operations or use of space outside the boundaries of the site shall be by arrangement with all interested parties. It must be emphasized that the Contractor must take all practical steps to prevent his workmen from entering adjoining property and in the event of trespass occurring the Contractor will be held entirely responsible.

Areas located immediately outside the construction area are known to contain mines and unexploded ordnance (UXO). Contractors assume all risks when venturing in or out of the designated work area.

1.6 TEMPORARY STRUCTURES

The Contractor shall erect suitable temporary fences, lighting, and necessary structures to safeguard the site, materials and plant against damage or theft and for the protection of the general public and shall adequately maintain the same throughout the course of the contract.

1.7 SUBCONTRACTORS

Compliance with the provisions of this section by subcontractors will be the responsibility of the contractor.

1.8 LIST OF CODES AND TECHNICAL CRITERIA:

The following codes and technical criteria and those referenced therein shall be required for this project.

References within each reference below shall be required and adhered to. This list is not exhaustive and is not necessarily complete.

AABC - Associated Air Balance Council (National Standards for total System Balance)
ACI 318 Building Code Requirements for Structural Concrete (latest edition), American Concrete Institute
Air Force Manual 32-1071, Security Engineering, volumes 1-4, 1 May 1994
American Water Works Association, ANSI/AWWA C651-99 standard
ARI - Air Conditioning and Refrigeration Institute
ASCE 7-02, Minimum Design Loads for Buildings and Other Structures, 2002
ASHRAE - American Society of Heating, Refrigeration and Air-Conditioning Engineers Handbooks: Fundamentals; HVAC Systems and Equipment; HVAC Applications; Refrigeration.
ASHRAE Standard 55-2004, Thermal Environmental Conditions for Human Occupancy
ASHRAE Standard 62.1-2004, Ventilation for Acceptable Indoor Air Quality
ASHRAE Standard 62.2-2004, Ventilation and Acceptable Indoor Air Quality for Low-Rise Residential
ASHRAE Standard 90.1-2001, Energy Standard for Buildings Except Low-Rise Residential Buildings
ASHRAE Standard 90.2-2004 with 2006 supplement, Energy-Efficient Design of Low-Rise Residential Buildings
ASME - American Society for Mechanical Engineering
ASTM - American Society for Testing and Materials
ASTM-D-1586 Standard Test Method for Standard Penetration Test
ASTM-D-5299 Standard Guide for Decommissioning Ground Water Wells
American Water Works Association (AWWA) 100-6 Water Wells
AWS - American Welding Society
DCID 6/9 Physical Security Standards for Sensitive Compartmented Information Facilities
DCID 1/21, Manual for Physical Security Standards For Sensitive Compartmented Information Facilities (SCIF)
EIA ANSI/TIA/EIA-607: (1994) Commercial Building Grounding/Bonding Requirement Standard
Factory Mutual (FM) Approval Guide-Fire Protection (2002)
IBC - International Building Codes, 2006 or latest edition (and its referenced codes including those inset below)
IEEE C2, National Electrical Safety Code (NESC), latest edition (2007)
IFGC – International Fuel Gas Code
IMC – International Mechanical Code
IPC – International Plumbing Code
Lighting Handbook, IESNA, latest edition
MIL-HDBK-1190, Facility Planning and Design Guide
Codes and Standards of the National Fire Protection Association (NFPA)
[as applicable and enacted in 2002 or later, unless otherwise noted]
National Electrical Safety Code (NESC), Institute of Electrical and Electronic Engineers (IEEE C2), 2007 edition
NFPA 10, Portable Fire Extinguishers, 2002 edition
NFPA 30, Flammable and Combustible Liquids Code, 2003 edition
NFPA 30A, Code for Motor Fuel Dispensing Facilities and Repair Garages, 2003 edition
NFPA 54, National Fuel Gas Code, 2002
NFPA 58, Liquefied Petroleum Gas Code, 2004
NFPA 70, National Electrical Code, 2008 edition
NFPA 72, National Fire Alarm Code, 2002 edition
NFPA 75, Standard for the Protection of Information Technology Equipment
NFPA 90A, Air Conditioning and Ventilating Systems, 2002 edition
NFPA 101, Life Safety Code, 2006 edition
NFPA 110, Standard for Emergency and Standby Power Systems, 2005 edition
NFPA 780, Standard for the Installation of Lightning Protection Systems.

Plumbing and Drainage Institute (PDI-WH-201) water hammer arrestors
SMACNA - Sheet Metal and Air Conditioning Contractors' National Association, Standards and Guides, latest editions
International Mine Action Standards, latest edition; (see http://www.mineactionstandards.org for copy of standards)
TM 5-785 Weather Data
TM 5-802-1 Economic Studies
TM 5-805-4 Noise and Vibration
TM 5-811-1 Electrical Power Supply and Distribution
UFC 1-200-01, Design: General Building Requirements, 20 June 2005
UFC 1-300-07A Design Build Technical Requirements
UFC 3-220-03FA, Soils and Geology Procedures for Foundation Design of Building and Other Structures, 16 Jan 2004
UFC 3-230-03a, Water Supply, 16 Jan 2004
UFC 3-230-04a, Water Distribution, 16 Jan 2004
UFC 3-230-06a, Subsurface Drainage, 16 Jan 2004
UFC 3-230-07a, Water Supply: Sources and General Considerations, 16 Jan 2004
UFC 3-230-08a, Water Supply: Water Treatment, 16 Jan 2004
UFC 3-230-09a, Water Supply: Water Storage, 16 Jan 2004
UFC 3-230-10a, Water Supply: Water Distribution, 16 Jan 2004
UFC 3-230-13a, Water Supply: Pumping Stations, 16 Jan 2004
UFC 3-230-17FA, Drainage in Areas Other than Airfields, 16 Jan 2004
UFC 3-240-03N, Operation and Maintenance: Wastewater Treatment System Augmenting Handbook, 16 Jan 2004
UFC 3-240-04a, Wastewater Collection, 16 Jan 2004
UFC 3-240-07FA, Sanitary & Industrial Wastewater Collection: Gravity Sewers, 16 Jan 04
UFC 3-240-09FA, Domestic Wastewater Treatment Systems, January 2004

UFC 3-310-01, Structural Load Data, 25 May 2005
UFC 3-400-01, Design: Energy Conservation, 5 July 2002
UFC 3-410-01FA Heating, Ventilating and Air Conditioning, Change 1, 15 May 2003
UFC 3-410-02A, HVAC Control Systems. 15 May 2003
UFC 3-410-04N, Industrial Ventilation, 25 October 2004
UFC 3-420-01, Plumbing Systems Design, 19 June 2003
UFC 3-430-01FA, Heating and Cooling Distribution Systems, 27 July 2003
UFC 3-460-01, Petroleum Fuel Facilities, 16 January 2004
UFC 3-501-03N, Electrical Engineering Preliminary Considerations, 16 Jan 2004
UFC 3-520-01, Interior Electrical Systems, 10 June 2002
UFC 3-530-01AN, Design: Interior and Exterior Lighting and Controls, 19 Aug 2005
UFC 3-535-01, Visual Air Navigation Facilities, 17 November 2005
UFC 3-540-04N Design: Diesel Electric Generating Plants, 16 Jan 2004
UFC 3-550-03FA Design: Electrical Power Supply and Distribution Systems, 1 Mar 2005
UFC 3-600-01, Design: Fire Protection Engineering for Facilities, 26 Sept 2006
UFC 4-010-01, Design: Minimum DoD Antiterrorism Standards for Buildings, 22 Jan 2007
UFC 4-010-02, DoD Minimum Antiterrorism Standoff Distances for Buildings, 19 Jan 2007
UFC 4-020-01FA, Security Engineering: Project Development, 1 Mar 2005
UFC 4-020-02FA, Security Engineering: Concept Design, 1 Mar 2005
UFC 4-020-03FA, Security Engineering: Final Design, 1 Mar 2005
UFC 4-020-04FA, Electronic Security Systems: Security Engineering, 1 Mar 2005
UFC 4-021-01, Design and O&M: Mass Notification Systems, draft 1 May 2006
UFC 4-022-01, Security Engineering: Entry Control Facilities/Access Control Points, 25 May 2005
UFC 4-214-03, Central Vehicle Wash Facilities, 16 January 2004
UFC 4-722-01, Design: Dining Facilities, 27 January 2003
Underwriters' Laboratories (UL) Fire Protection Equipment Directory (2002)
UL Standards (as applicable)

UL 710, Exhaust Hood for Commercial Cooking Equipment, latest edition
UL 737, Fireplace Stoves, latest edition
UL 752, Bullet Resisting Equipment, 2000 or later
USCINCCENT OPORD 97-1
US Environmental Protection Agency (USEPA) 625/1-83/015, Design Manual: Municipal Wastewater Stabilization Ponds, 1983.
US Environmental Protection Agency (USEPA) 625/R-00/0085, Onsite Wastewater Treatment Systems Manual, February 2002.
Unified Facilities Guide Specifications UFGS 31 21 11, Soil Surface Erosion Control, Oct 07
US Army Corps of Engineers-AED Design Requirements: Well Pumps & Well Design, May 2009

The publications to be taken into consideration shall be those of the most recent editions.
Unified Facility Criteria (UFC) is available online at http://www.wbdg.org/ccb/browse_cat.php?o=29&c=4

Standards other than those mentioned above may be accepted if the standards chosen are internationally recognized and meet the minimum requirements of the specified standards. The Contractor shall be prepared to submit proof of this if requested by the Contracting Officer.

2.0 SITE DEVELOPMENT

2.1 GENERAL

The project includes furnishing all materials, equipment and labor for constructing water, sanitary sewer and storm sewer service lines, as applicable, and connecting to the existing or new sewer networks.

2.2 ENVIRONMENTAL PROTECTION

2.2.1 Applicable regulations

The Contractor shall comply with all Host Nation laws, rules, regulations or standards concerning environmental pollution control and abatement with regard to discharge of liquid waste into natural streams or manmade channels. The Contractor shall review host nation and U.S. Government environmental regulations with the Contracting Officer prior to design and discharge of any liquid wastes into natural streams or manmade channels.

2.2.2 Notification

The Contracting Officer will notify the Contractor in writing of any observed non-compliance with the foregoing provisions. The Contractor shall immediately take corrective action. If the Contractor fails or refuses to promptly take corrective action, the Contracting Officer may issue an order stopping all or part of the work until satisfactory corrective action has been taken. No extension of time or damages will be awarded to the Contractor unless it was later determined that the Contractor was in compliance.

2.2.3 Spillages

Measures shall be taken to prevent chemicals, fuels, oils, greases, bituminous materials, waste washings, herbicides and insecticides, and construction materials from polluting the construction site and surrounding area.

2.2.4 Disposal

Disposal of any materials, wastes, effluents, trash, garbage, oil, grease, chemicals, etc., shall be taken to a dumpsite off site and subject to the approval of the Contracting Officer. Burning at the project site for the disposal of refuse and debris will not be permitted.

2.3 CIVIL SITE DEVELOPMENT

2.3.1 Site Plan

The contractor shall prepare plat or plan of property as part of the design package consisting of a Boundary Survey of Camp Zafar located in Herat Province in the city of Herat, Afghanistan. Site address is as follows, at the south end of Zafar Garrison. The survey shall show the closure of the property boundary consisting of identifying all property corners, establishing horizontal and vertical control listing all bearing and distances of property lines from the centerline of all adjacent roads. The contractor shall place property corner markers and a monument on the property showing site elevations, coordinate grid systems and WGS 84 latitude longitude. This survey shall meet the requirements of World Geodetic System 1984 (WGS 84 UTM Zone 42 S) in decimal degrees. The survey design shall include a topographic map showing locations of all building corners, structures, major trees, road names, dimensions, and easements, right of way, setbacks, parking and paved areas, storage containers, stoops, sidewalks and walkways, underground and above-ground utilities, and bunker locations. The contractor shall identify and show perimeter security walls, fences, hesco barriers, guard towers, and entry control point structures. The Contractor shall locate all facilities in general agreement with drawings included and any requirements in the Scope of Work, Section 01010. All site features shall be clearly defined and dimensioned on the site plan. Buildings shall be provided access for emergency, service, and fire fighting vehicles. Roads and parking areas shall be designed for the turning radius of the largest vehicle entering the compound. The site plan shall show geometric design of the site, including applicable dimensions of all exterior facilities, mechanical equipment, pavements, utilities, etc. Required facilities are described in the following sections of this specification. All roads and areas where tractor-trailer vehicles will travel shall be designed for the largest vehicle's worst case turning radius. Design and construction of roads and pavements shall be based upon recommendations from the geotechnical investigation required herein.

All site plans and master plans shall be drawn in the following projection and datum for incorporation into the U.S. Army Corps of Engineers GIS system: WGS 1984 UTM Zone 42 S

2.3.2 Demolition

Demolition shall include removal of all structures, foundations, pavements, and utilities, and clearing and grubbing. All refuse and debris shall be disposed of off site including scrap metal at a site approved by the Contracting Officer.

Demolished fencing and concertina wire shall be neatly rolled up for reuse by the host government. Likewise, used fence posts and outriggers shall be neatly stockpiled for reuse by the host government. Holes and depressions shall be backfilled. Fill materials shall be composed of satisfactory soils or aggregates defined in ASTM D 2487 as GW, GP, GM, SP, SM, SW, CL-ML. Minimum soil compaction shall be 95 percent of maximum density as defined in ASTM D 1557.

2.3.3 Site Grading & Drainage

The contractor will provide all necessary grading to insure adequate drainage so that no areas will be flooded due to a rainfall of a 10-year frequency. Drainage of the area should be compatible with the existing terrain. Building ground floor finished elevation shall be a minimum 150mm above adjacent grade and outside grade shall slope away from the building on all sides at a minimum slope of 5% for a distance of 3 meters. Holes and depressions shall be backfilled. Fill materials shall be composed of satisfactory soils or aggregates defined in ASTM D 2487 as GW, GP, GM, SP, SM, SW, SC, and CL-ML. Minimum soil compaction shall be 95 percent of maximum density as defined in ASTM D 1557.

The Contractor shall perform final site grading after installation of all required drainage structures per the Drainage Plan that shall be prepared as part of this project and after installation of any other buried

utilities or other project components.

Native crushed stone 100 mm thick shall be placed around all buildings, from the building wall or building landscaping out 2m and all areas of anticipated vehicle traffic to reduce erosion and to provide dust control. Concrete sidewalks, 1.5 meter wide, 100 mm thick shall be constructed on compacted subgrade and installed as shown on the site plan. Gravel sidewalks between the new barracks shall have concrete curbing in order to prevent the gravel from spreading.

Drainage of the area should be compatible with the existing terrain. Building ground floor finished elevation shall be a minimum 150mm above adjacent grade and outside grade shall slope away from the building on all sides at a minimum slope of 5% for a distance of 3 meters. Holes and depressions shall be backfilled. Fill materials shall be composed of satisfactory soils or aggregates defined in ASTM D 2487 as GW, GP, GM, SP, SM, SW, CL-ML. Minimum soil compaction shall be 95 percent of maximum density as defined in ASTM D 1557. All areas left exposed due to earthworks shall be vegetated and proper erosion control measures applied per UFGS 31 31 11.

2.3.4 Paving

Roads

Paved roads are required within the base area. All pre-existing conditions are undeveloped land with gentle slopes, without substantial vegetation and with natural drainage channels of moderate size and spacing that are dry most of the time. All roads shall be of wearing surface 7.3 meters (24 feet) wide, unless otherwise noted, graded for proper drainage, provided with necessary drainage structures, and completed with prescribed surfaces in accordance with applicable sections of TM 5-822-2 and TM 5-822-5. Installation roads subgrade shall be scarified and compacted to 95% proctor density. Base course shall be minimum 250 mm (10 inch) compacted to 100% of laboratory maximum dry density, and surfaced with a minimum 75 mm (3 inch) hot mix asphalt concrete, unless otherwise noted. Roadways and sidewalks are required as shown on attached drawings and shall be designed and constructed based upon recommendations from geotechnical analysis as required herein. The Contractor shall notify the Contracting Officer immediately if initial site survey determines that area hydrology requires major drainage structures or bridges. The Contractor shall notify the Contracting Officer immediately if required lengths of road or preexisting conditions are determined to be substantially or materially different than the above-described conditions or estimates.

2.3.4.1 Bridges and Site Grading Plan

Preliminary investigation indicates there may be a need for minor drainage structures due to existing wadi(s) at the site. The contractor shall design a site grading plan that provides positive drainage and minimizes the requirement for major structures in a cost effective manner.

2.3.4.2 Parking Areas and Motor Pools

Contractor shall construct aggregate surfaced parking and storage areas. Subgrade shall be scarified and compacted to 95% proctor density. Aggregate base course shall be 150mm (6 inches) for parking areas, and 250mm (10 inches) for motor pools. Aggregate Base Course (ABC) material must be well graded, durable aggregate uniformly moistened and mechanically stabilized by compaction. Degree of compaction shall be expressed as a percentage of the maximum density obtained by the test procedure presented in ASTM D 1557 .

2.4 FORCE PROTECTION DESIGN

The Contractor shall design and construct force protection measures to include a complete perimeter wall, guard towers, compound illumination system, security communication systems and Entry Control Points (ECPs). ECPs shall be composed of a Primary ECP. The Force Protection design shall incorporate minimum setbacks for new facilities to maximum extent possible as permitted by size of the site and the requirements of the user. Force protection design shall be in accordance with Joint Security Directorate Antiterrorism/Force Protection Guide, March 2002. Force Protection design shall also meet the requirements of UFC 4-010-01, Design: Minimum DoD Antiterrorism Standards for Buildings, 8 Oct 2003 and UFC 4-010-02, DoD Minimum Antiterrorism Standoff Distances for Buildings, 8 Oct 2003 and Joint Security Directorate Antiterrorism/Force Protection Guide, March 2002.

See Appendix A for Gate House, Guard Shack, and Guard Tower building designs and standard details for Perimeter Security wall, and Active and Passive Vehicle Barriers.

2.4.1 Perimeter Security Wall (Option Item)

Provide Reinforced Cement Concrete RCC walls with a core 300mm thick and 100 mm of sand toned stucco on each side core, see Appendix A for detail. Walls shall be constructed around the perimeter of the site. The height of the walls shall measure at least 3.0 meters from the inside grade and inside grade shall in all cases be higher than outside grade. The wall shall be capped with a precast concrete capping. Steel outriggers to support barbed wires and a single-coil concertina style razor wire shall be provided and installed by the contractor' Sniper screen is generally not required for the wall. Site grading must slope away from the walls for at least a distance of 5 meters. The wall shall be designed to prevent visual access to the inside of compound by all pedestrian and vehicular traffic outside the compound which may require the wall to be built at a higher level in some locations.

2.4.1.1 Perimeter Wall Access Gates

2.4.1.1.1 Swinging Gates

Gates shall be swing type and be constructed of steel and be a pair of 3.65 m wide x 2.4 m high steel leaves, constructed of 6mm steel plate skins, steel tube frame, and steel tube intermediate posts and rails. Gate design shall ensure it is dimensionally stable, square, true and planar. Gate leaves shall not rack, shake or deflect during operation and the hinges are to be designed and constructed to support the entire weight of each leaf. Gates shall have a sufficient number of hinges, anchor mounted to the exterior masonry walls, to support each gate leaf. Provide a locking mechanism that holds the gates together when in the closed position as well as a drop bolt that engages a steel sleeve embedded in the pavement.

2.4.1.2 Outriggers

Outrigger supporting arms shall be "Y" shaped with post securely embedded into the top of the wall. Posts shall conform to ASTM F 1083, Pipe, Steel, Hot Dipped Zinc Coated (Galvanized) Welded.

2.4.1.3 Reinforced Barbed Tape

Reinforced barbed tape shall be 600 mm diameter concertina style coil consisting of 31 loops. Each loop shall consist of 19 barb clusters per loop. Adjacent coils loops shall be alternately clipped together at three points about the circumference to produce the concertina effect upon deployment. Spacing between attachments points when deployed shall be 400 mm. The reinforced barbed tape shall be fabricated from 430 series stainless steel with hardness range of Rockwell (30N) 37-45 conforming to the requirements of ASTM A 176. Each barb shall be a minimum of 30.5 mm (1.2 inch) in length, in groups of 4, spaced on 102 mm (4 inch) centers. The stainless steel core wire shall have a 2.5 mm (0.098 inch) diameter with a minimum tensile strength of 895 MPa. Sixteen gauge stainless steel twistable wire ties shall be used for attaching the barbed tape to the barbed wire. The reinforced barbed tape shall be equivalent to NSN: 5660-01-457-9852.

2.4.1.4 Chain-Link Fence and Gates

Provide chain-link fence and gates around Well House, all vehicle maintenance facilities including GOV parking and all facilities with fencing requirements per 1010 and 1015. Fence and gate fabric shall be No. 9 gage wires woven into a 50 mm diamond mesh. Fabric shall be coated with 366 grams per square meter zinc galvanizing. Posts shall be ASTM F 1083 Pipe, Steel, Hot Dipped Zinc Coated (Galvanized) Welded or equal. Top of fence and gates shall be provided with outriggers and reinforced barbed tape as indicated above. Post sizes shall be as shown on drawings.

The gates shall be swing type. Hinged gates shall be a pair of 3.65 m wide x 2.4 m high leafs, constructed of a steel tube frame and steel tube intermediate posts and rails. The design of the gates shall insure that it is dimensionally stable, square, true and planar. Gate leafs shall not rack or deflect when turning on its hinges. Gates shall have a sufficient number of hinges, anchor mounted to the exterior masonry walls, to support each gate leaf. Provide a locking mechanism that holds the gates together when in the closed position as well as a drop bolt that engages a steel sleeve embedded in the pavement.

2.4.1.5 Sniper Screen

Sniper screen material will be ultraviolet light resistant and guaranteed against sunlight degradation for five years. Material will allow wind to blow through, without stretching the material, or distorting the frame. Sniper screen material will be fastened to standard galvanized fencing (see above) mounted to a rigid frame. The frame shall be securely embedded into the top of the wall. Frame components shall conform to ASTM F 1083, Steel Pipe, Hot Dipped Zinc Coated (Galvanized Welded).

2.4.2 Entry Control Point (ECP), Primary

Primary ECP shall be laid out and constructed by the Contractor to facilitate secure entrance of authorized vehicles into the compound. A Gate House shall be provided inside the compound as part of the Primary ECP. Entrance to the Primary ECP shall be paved, and shall have a single-leaf manually operated sliding steel gate or a two-leaf steel swinging gate. The gate shall be considered the Active Vehicular Barrier (AVB). A drop arm and guard shack shall be provided and located at a distance of one and a half vehicles away from the entrance to serve as a checkpoint. Jersey Barriers or other approved alternatives shall be used to design and construct a Passive Vehicular Barrier (PVB) beyond and away from the checkpoint to significantly slow down approaching vehicles. The PVB shall be laid out to force approaching vehicles into a snake-like manoeuvre while approaching the checkpoint and to significantly slow them down. See Appendix A for Gate House (Reception Building) and Guard Shack drawings.

Provide a rejection lane after vehicle inspection and before entrance to the compound.

2.4.2.1 Vehicle Barriers

2.4.2.1.1 Active Barriers - Drop Arm Gates

The height of the beam shall be a minimum of 30 inches above finished grade. The crash beam must be capable of blocking a minimum road width of 4.0 meters. The crash beam shall be manually raised and lowered with less than 30 pounds of force. The end of the crash beam should include a locking pin with padlock acceptance for securing the beam when it is in the down position capable of stopping large (10,000 lb.) trucks, in addition to heavy duty steel gates into the compound. The gate must allow a vehicle 6 meters high to pass through.

2.4.2.1.2 Active Barriers – Tire Shredder

Additional active barriers shall be tire shredder type with manual latch down capability. Shredders shall

extend the entire width of the roadway opening where installed. At minimum provide one shredder at rejection lane entrance to prevent unauthorized gate access.

2.4.2.1.3 Active Barriers – Cable Lift Barrier

A Cable Lift Gate will be provided in addition to the sliding gate. Cable lift gate will normally be in the raised (deployed) position. Cable lift gate shall be certified to stop a 6,800 KG truck travelling 80 KPH. Cable lift gate sShall be balanced by counterweights so it can be manually raise or lowered by one man in seconds. Deployed height will be at least 1 M. Cables shall be a minimum of 25mm diameter braided steel.

2.4.2.1.4 Passive Barriers - Concrete

Barriers shall be concrete blocks of one meter by one meter by one meter dimensions. Similar arrangements of large stones (one cubic meter size), jersey barriers or equal sized obstacles may be used.

2.4.2.1.5 Passive Barriers – Hesco Barriers

Hesco barriers shall be made of geo-textile fabric shall be 2mm (0.08”) non-woven polypropylene and bound with 8 gauge galvanized steel wire mesh size 7.62 cm (3”) grid. The coil hinges and joining pins shall be 8 gauge hardened steel. Fill material shall be a mixture of sand and gravel. The gravel shall not be more than 1.8 cm (¾”) in size. The materials shall be compacted in lifts no greater than 25 cm (10”).

Bastions shall be provided with suitable foundations as recommended by the manufacturer depending on the height, and filled with a sand & gravel mixture. Provide a gravel base at least 50 cm (20”) deep, and extending around the bottom edge of the barrier by at least 50 cm (20”), for proper support and drainage. The gravel base material shall have no stones large than 2.5 cm (1”), due to the risk of becoming projectiles in a blast.

Protection from UV light shall be provided with an application of a protective coating such as UV CAM, cement slurry not greater than 0.3 cm (1/8”) thick. The cement slurry is a mixture of cement powder and water, mixed to a proportion of 1:1, but this may be adjusted to suit the application method. Sand may also be added as necessary.

Submittal Requirements:

a. The manufacturer of this product must have been in this business for at least 5 years.

b. Installers must be certified by the manufacturer.

c. Welded mesh and wire must be ASTM A641 Class 3

d. Geo-textile shall be ASTM D4632, D6241, D4355, D4751 & D4491.

e. Structural calculations must be prepared by a licensed engineer and must be submitted and approved by the Government prior to installation

2.4.3 Loudspeakers and Alarm System

Install Loud Speaker & Alarm System that can alert the entire compound via panic button from any tower or guard post station. Speaker & Alarm System shall be exterior grade components to withstand severe

weather conditions of cold, heat, rain, sleet, and dust storms, and speech transmitted shall be completely understandable during these conditions from any point within the compound. All wires shall be installed in conduits.

2.5 CIVIL UTILITIES

2.5.1 General

The design of the water and sanitary systems shall be sized to provide flow and discharge based on personnel loading consumption and a fixture unit basis as described in the IPC. The design drawings shall show all utility lines, line sizes, valves, manholes, cleanouts, disinfection systems, and applicable details associated with water and sanitary system designs. Specifications covering water lines, valves, pumps, controls, sanitary sewers and storm sewers shall be submitted as part of the design and shall require standard materials that are available in-country. Contractor shall install and connect exterior sanitary sewer collection and water supply piping to service connection points of each facility requiring such.

2.5.2 Water

2.5.2.1 General

Infrastructure design and construction shall serve the demand. The Contractor shall install water distribution mains, branches, laterals, lines and service connections to include all pipe, valves, fittings and appurtenances. Exterior water line construction shall include service to all buildings as described in the Scope of Work Section 01010. The required Average Daily Demand (ADD) approximation is derived from 200 liters per capita per day (lpcd) or 53 gallons per capita per day (gpcd). In the event potable or non-potable use water is required prior to completion of the water facilities infrastructure the Contractor may be issued a Request for Proposal to provide non-potable (tank truck) and potable (bottled or other reliable source) consumption. Provide a minimum of two (2) outside water hydrants (hose spigots) for any building or facility for which a water supply is provided for landscaping purposes. This effective population as stated in Section 01010 shall be multiplied by a capacity factor of 1.5 to develop a design population to account for future growth and peak demand, per UFC 3-230-07a, paragraph 1-3, and UFC 3-230-03a, paragraph 3-1.

2.5.2.2 Water Storage Tank

Contractor shall provide a circular steel or circular concrete ground storage reservoir (GST) to be located on the ground surface. Volume of the GST shall be a minimum storage volume of a full days demand. The Contractor shall verify storage volume requirements based on final design population. The storage facility shall be located above drainage areas and locations subject to flooding as approved by the Contracting Officer. The storage facility shall be located on the higher elevations of the site to promote gravity flow and reduce pumping requirements. Overflow and air vents shall be screened so that birds, rodents and debris cannot enter the reservoir.

2.5.2.3 Disinfection & Chlorination System

Use hypochlorite compounds for disinfection. A hypo-chlorinator shall be used to feed a sodium hypochlorite solution of 5-15% available chlorine into the system. Hypochlorite compound may be either in liquid or solid form. The hypo-chlorination system shall consist of a chemical solution tank for hypochlorite, diaphragm-type pump, power supply, water pump, pressure switch and storage tank (optional hydro-pneumatic/storage). The pump shall feed a hypochlorite solution in proportion to the water demand. The hypo-chlorinator shall have a pumping rate, liters per day (lpd) adequate to deliver

5% available hypochlorite solution adjustable to the quantity of water being produced from the source. Dosage rate will vary somewhat depending on actual pump production rate and available residual chlorine in the system. Contractor shall determine the required dosage rate milligrams per liter (mg/l) to maintain the required chlorine residual (usually 0.2-0.4mg/l) in the distribution system. Chlorine solution tank shall be large enough to hold a three days supply of hypochlorite solution. A fresh solution shall be prepared every two or three days because the solution may lose its strength over time and this will affect the actual chlorine feed rate. The hypochlorite shall be stored in a cool dry place. Sodium hypochlorite can lose from two to four percent of its available chlorine content per month at room temperature. Contractor shall verify required minimum residual chlorine in accordance with local requirements verified and approved by the Contracting Officer. The chlorination system shall have the capability for manually adjusting the dosage rate and be installed in such a manner that the system can be easily disconnected and bypassed in the event of health safety or routine maintenance and repair. Disinfection of water mains shall be in accordance with AWWA standard C651-86 and disinfection of storage facilities in accordance with AWWA standard C652-86

2.5.2.4 Pump House

Contractor shall provide a booster pump station with two end suction or split case double suction horizontal split case (frame mounted) centrifugal pumps arranged in parallel for pumping water storage into the main distribution system. The pumps and controls shall be designed to supply and maintain acceptable system pressure throughout the distribution network given the full range of flow conditions (low flow to peak). For conditions of low demand and to prevent short cycling of primary pumps, provide a hydro-pneumatic tank. Each booster pump shall be capable of delivering **twice the ADD to the system. The suction side of the service booster pumps shall have an eccentric reducer and gate valve installed. The discharge side shall have a gate valve, check valve between the** pump and the gate valve and concentric reducer, pressure gage and air relief valve.

2.5.3 Water Distribution System

2.5.3.1 General

To calculate Average Daily Demand (ADD) use an estimated per capita usage rate of 200 L or 53 gallons per day, the effective population is multiplied by a capacity factor of 1.5 to achieve a design population. The design Population is then multiplied by the estimated per capita usage rate to obtain the ADD. The 1.5 Capacity Factor will account for future growth and peak demand.

The Contractor shall provide a water distribution system described as follows: Pipe diameters used in the network shall be 300mm (12 inch), 250mm (10 inch), 200mm (8 inch), 150mm (6 inch) and 100mm (4 inch), as calculated, using ductile iron (DI) conforming to AWWA C151, installed in accordance with C 600 or polyvinyl chloride (PVC) as per ASTM D 1784 and 1785. Contractor shall not substitute uPVC or HDPE pipes. All pipes and joints shall be capable of at least 1.03 MPa (150 psi) and 1.38 MPa (200psi) hydrostatic test pressure unless otherwise specified. Pipes should be adequate to carry the maximum quantity of water at acceptable velocities 0.9 to 1.5m/sec (3 to 5 ft/sec) at maximum flows not to exceed 2.8m/sec (9.2ft/sec). Refer to UFC 2-230-10a, Chapter 8, when designing for maximum flow. Distribution lines shall be a minimum of 100mm (4 inch) in diameter.

The water pressures shall be in the range of 276 – 414 kPa (40-60psi) to all building connections. M**aximum pressure shall be 517kPa (75psi)**. If high pressures (greater than 690kPa, 100 psi) cannot be avoided, pressure-reducing valves shall be used. Water service connections to buildings shall vary from 19mm, 25mm or 38mm to 75mm, as calculated, depending on the usage requirement. Pipe service connections from the distribution main to the building shall be either Polyvinyl Chloride (PVC) plastic Schedule 80 ASTM D 1785 or copper tubing conforming to ASTM B 88M, Type K, annealed. After choosing piping material type, use similar piping materials for all buildings for efficiency of future maintenance activities.

The distribution network shall be laid out in a combination grid and looped pattern with dead ends not exceeding 30m (99 feet). Dead end sections shall not be less than 150mm (6 inch) diameter, and shall either have blow off valves or flush valves installed for periodic flushing of the line. Any pipe with a blow off or flush valve the line shall be at least 150mm (6 inch) in diameter. Contractor shall provide a system analysis to determine that water pressures are in the range specified above.

Water supply distribution shall connect to a building service at a point approximately 1.5m (5 feet) outside the building or structure to which the service is required. Adequate cover must be provided for frost protection. A minimum cover of 800mm (2'-8") is required to protect the water distribution system against freezing. Water lines less than 1.25 meters (4 feet) deep under road crossings shall have a reinforced concrete cover of at least 150 mm (6 inch) thickness around the pipe extending out to 1m from each road edge.

2.5.3.2 Pipe

The Contractor shall provide pipe of adequate strength, durability and be corrosion resistant with no adverse effect on water quality. The exterior surface of the pipe must be corrosion resistant. If the pipe is installed underground pipe shall be encased with polyethylene in accordance with AWWA C105. Water distribution pipe material shall be PVC or Ductile Iron (DI). Ductile iron pipe shall conform to AWWA C104, etal. DI fittings shall be suitable for 1.03MPa (150psi) pressure unless otherwise specified. Fittings for mechanical joint pipe shall conform to AWWA C110. Fittings for use with push-on joint pipe shall conform to AWWA C110 and C111. Fittings and specials shall be cement mortar lined (standard thickness) in accordance with C104. Polyvinyl Chloride (PVC) pipe shall conform to ASTM D 1785. Plastic pipe coupling and fittings shall be manufactured of material conforming to ASTM D 1784, Class 12454B. PVC screw joint shall be in accordance with ASTM D 1785, etal, Schedules 40, 80 and 120. PVC pipe couplings and fittings shall be manufactured of material conforming to ASTM D 1784, Class 12454B. Pipe less than 80mm (3 inch), screw joint, shall conform to dimensional requirements of ASTM D schedule 80. Elastomeric gasket-joint, shall conform to dimensional requirements of ASTM D 1785 Schedule 40, All pipe and joints shall be capable of 1.03 MPa (150psi) working pressure and 1.38 MPa (200psi) hydrostatic test pressure. Contractor shall not use either the uPVC or HDPE for any of the water pipes.

2.5.3.3 Hydrostatic, Leakage and Disinfection tests

The Contracting Officer will be notified not less than 48 hours in advance of any water piping test and will be given full access for monitoring testing procedures and results. Where any section of water line is provided with concrete thrust blocking for fittings or hydrants, tests shall not be made until at least 5 days after installation of concrete thrust blocking, unless otherwise approved.

2.5.3.4 Pressure Test

After the pipe is laid, the joints completed, and the trench partially backfilled leaving the joints exposed for examination, the newly laid piping or any valved section of piping shall, unless otherwise specified, be subjected for 1 hour to a hydrostatic pressure test of 1.38 MPa (200 psi). Each valve shall be opened and closed several times during the test. Exposed pipe, joints, fittings, hydrants and valves shall be carefully examined during the partially opened trench test. Joints showing visible leakage shall be replaced or remade as necessary. Cracked or defective pipe, joints, fittings, hydrants and valves discovered following this pressure test shall be removed and replaced and retested until the test results are satisfactory.

2.5.3.5 Leakage Test

Leakage tests shall be conducted after all pressure tests have been satisfactorily completed. The

duration of each leakage test shall be at least 2 hours, and, during the test, water lines shall be subjected to not less than 1.38 MPa (200 psi). Leakage is defined as the quantity of water to be supplied into the newly laid pipe, or any valved or approved section, necessary to maintain pressure to within 34.5kPa (5 psi) of the specified leakage test pressure after the pipe has been filled with water and all air expelled. Pipe installation will not be accepted if leakage exceeds the allowable leakage, as determined by the following formula:

L = 0.0001351ND (P raised to 0.5 power), where
L = Allowable leakage in gallons per hour
N = Number of joints in the length of pipeline tested
D = Nominal diameter of the pipe in inches
P = Average test pressure during the leakage test, in psi gauge

Should any test of pipe disclose leakage greater than that calculated by the above formula, the defective joints shall be located and repaired until the leakage is within the specified allowance, without additional cost to the government.

2.5.3.6 Bacteriological Disinfection

2.5.3.6.1 Disinfection Procedure

Before acceptance of potable water operation, each unit of completed waterline shall be disinfected as prescribed by AWWA C651. After pressure tests have been completed, the unit to be disinfected shall be thoroughly flushed with water until all entrained dirt and mud have been removed before introducing the chlorinating material. Flushing will be performed in a manner and sequence that will prevent recontamination of pipe that has previously been disinfected. The chlorinating material shall be liquid chlorine, calcium hypochlorite, or sodium hypochlorite. The chlorinating material shall provide a dosage of not less than 50 ppm and shall be introduced into the water lines in an approved manner. Polyvinyl Chloride (PVC) pipelines shall be chlorinated using only the above-specified chlorinating material in solution. The agent shall not be introduced into the line in a dry solid state. The treated water shall be retained in the pipe long enough to destroy all non-spore forming bacteria. Except where a shorter period is approved, the retention time shall be at least 24 hours and shall produce not less than 25 ppm of free chlorine residual throughout the line at the end of the retention period. Valves on the lines being disinfected shall be opened and closed several times during the contact period. The line shall then be flushed with clean water until the residual chlorine is reduced to less than 1.0 ppm. During the flushing period, each blow off or flush valve on the line shall be opened and closed several times.

2.5.3.6.2 Sampling

For each building connected to the water system, personnel from the Contractor's commercial laboratory shall take at least 3 water samples from different points, approved by the Contracting Officer, in proper sterilized containers and perform a bacterial examination in accordance with approved methods. The commercial laboratory shall be verified to be qualified by the appropriate authority for examination of potable water. Contractor shall submit a water sampling protocol for approval. This shall include at a minimum the name of the laborator, parameters to be tested, the company conducting the sampling and the sample locations.

2.5.3.6.3 Acceptance Requirements

The disinfection shall be repeated until tests indicate the absence of pollution for at least 2 full days. The unit will not be accepted until satisfactory bacteriological results have been obtained. All retests shall be conducted at the Contractor’s expense.

2.5.3.6.4 Time for making Tests

Except for joint material setting or where concrete thrust blocks necessitate a 5-day delay, pipeline jointed with rubber gaskets, mechanical or push-on joints, or couplings may be subjected to hydrostatic pressure, inspected, and tested for leakage at any time after partial completion of backfill.

2.5.3.6.5 Concurrent Tests

The Contractor may elect to conduct the hydrostatic tests using either or both of the following procedures. Regardless of the sequence of tests employed, the results of pressure tests, leakage tests, and disinfection shall be recorded for submission and approval. Replacement, repair or retesting required shall be accomplished by the Contractor at no additional cost to the Government. Pressure and leakage testing may be conducted concurrently, Hydrostatic tests and disinfection may be conducted concurrently, using water treated for disinfection to accomplish the hydrostatic tests. If water is lost when treated for disinfection and air is admitted to the unit being tested, or if any repair procedure results in contamination of the unit, disinfection shall be re-accomplished.

2.5.3.7 Valves

Valves (Gate valves w/box) shall be placed at all pipe network tees and cross intersections, and the number of valves shall be one less than the number of lines leading into and away from the intersection. For isolation purposes valves shall be spaced not to exceed 3600 mm (12 feet). Gate valves shall be in accordance with AWWA C 500 and/or C509. Butterfly valves (rubber seated) shall be in accordance with C504 etal. The valves and valve boxes shall be constructed to allow a normal valve key to be readily used to open or close the valve. Provide traffic-rated valve boxes. Provide concrete pad, 1 meter (3'-4") square, for all valve boxes.

2.5.3.7.1 Vacuum and Air Release Valves

Air release valves are required to evacuate air from the main high points in the line when it is filled with water, and to allow the discharge of air accumulated under pressure. Vacuum relief valves are needed to permit air to enter a line when it is being emptied of water or subjected to vacuum. Contractor shall submit manufacturer's data for properly sized combination air and vacuum release valves and determine their locations on the distribution system subject to review and approval of the Contracting Officer.

2.5.3.7.2 Blow-Off Valves

The Contractor shall provide 40-50mm (1-5/8" – 2") blow-off valves at ends of dead end mains. Valves should be installed at low points in the mains where the flushing water can be readily discharged to natural or manmade drainage ditches, swales, dry wells, or other.

2.5.3.8 Thrust Blocking

Contractor shall provide concrete thrust blocking at any point where the layout of the system changes the direction of the flow, increases the velocity, or decreases or stops the flow. At these points, the pipes and fittings must be anchored and kept from moving or pulling apart by the use of thrust blocks installed against undisturbed earth.

2.5.4 Sanitary Sewer

2.5.4.1 General

There are no functional or salvageable sanitary sewer collection, treatment or disposal facilities at this *CSB* site. The Contractor shall obtain topographic information or other maps that show vegetation,

drainage channels and other land surface features such as underground utilities and related structures that may influence the design and layout of the collection system. If maps are not available, or do not provide satisfactory information or sufficient detail of the site, field surveys shall be performed. Sanitary sewers less than 1.25 meters (4 feet) under road crossings shall have reinforced concrete cover at least 150 mm (6 inch) thick around the pipe. Concrete cover will extend out to at least 1 m from each road edge.

Exterior sanitary sewer line construction shall include service to all buildings as described in the Scope of Work Section 01010. Contractor shall design sanitary sewer collection system using approved field survey data and finished floor elevations. Depending upon the topography and building location, the most practical location of sanitary sewer lines is along one side of the street. In other cases they may be located behind buildings midway between streets. Main collection sewers will follow the most feasible route to the point of discharge. The sewer collection system shall be designed to accommodate the initial occupancy and a reasonable expansion capability. All sewers shall be located outside of the roadways as much as practical, and minimize the number of roadway crossings. Sewer from one building shall not be constructed under another building, or remain in service where a building is subsequently constructed over it. Construction required shall include appurtenant structures and building sewers to points of connection with building drains 1.5m (5 feet) outside the building to which the sewer collection system is to be connected.

The Contractor shall use the following criteria where possible to provide a layout which is practical, economical and meets hydraulic requirements:

a. Follow slopes of natural topography for gravity sewers.
b. Check subsurface investigations for groundwater levels and types of subsoil encountered. If possible, avoid areas of high groundwater and the placement of sewers below the groundwater table.
c. Avoid routing sewers through areas which require extensive restoration or underground demolition
d. Depending upon the topography and building locates, the most practical location of sanitary sewer lines is along one side of the street. In other cases they may be located behind buildings midway between streets. The intent is to provide future access to the lines for maintenance without impacting vehicular traffic.
e. Avoid placing manholes in low-lying areas where they could be submerged by surface water or subject to surface water inflow. In addition, all manholes shall be constructed 50 mm higher than the finished grade, with the ground sloped away from each manhole for drainage.
f. Sewer lines shall have a minimum of 800 mm of cover for frost protection.
g. Locate manholes at change in direction, pipe size, or slope of gravity sewers.
h. Sewer sections between manholes shall be straight. The use of a curved alignment shall not be permitted.
i. If required by the design, locate manholes at intersections of streets where possible. This minimizes vehicular traffic disruptions if maintenance is required.
j. Sewer lines less than 1.25 meters deep under road crossings shall have a reinforced concrete cover of at least 150mm thickness around the pipe or shall utilize a steel or ductile iron carrier pipe. It is recommended to continue the reinforced concrete cover or carrier pipe a minimum of one (1) meter beyond the designated roadway.
k. Verify that final routing selected is the most cost effective alternative that meets service requirements.

2.5.4.2 Protection of Water Supplies

The Contractor shall ensure that the sewer design meets the following criteria:

2.5.4.2.1 a. Sanitary sewers shall be located no closer than 30m (100 feet) horizontally to water wells or earthen reservoirs to be used for potable water supply.

2.5.4.2.2 Sanitary sewers shall be no closer than 3 m (10 feet) horizontally to potable water lines; where the bottom of the water pipe will be at least 300mm (12 inches) above the top of the sanitary sewer, horizontal spacing shall be a minimum of 1.8m (6 feet).

2.5.4.2.3 Sanitary sewers crossing above potable water lines shall be constructed of suitable pressure pipe or fully encased in concrete for a distance of 2.7m (9 feet) on each side of the crossing. Pressure pipe will be as required for force mains in accordance with local standards and shall have no joint closer than 1m (3 ft) horizontally to the crossing, unless the joint is fully encased in concrete.

2.5.4.2.4 Depressed sewers crossing potable water lines must be installed below the water line with a minimum vertical clearance of 600mm (2 feet). Sewer joints will not be closer horizontally than 1 meter (3 feet) to the crossing, unless the joints are fully encased in concrete as required above.

2.5.4.3 Quantity and Quality of Wastewater

The Contractor shall verify the average daily flow considering both resident (full occupancy) and non-resident (8hr per day) population. The average daily flow will represent the total waste volume generated over a 24-hour period, and shall be based on 80% of total ADD.

Design criteria guideline shall be based on average influent wastewater characteristics as follows:

BOD_5 = 600 mg/l

TSS = 685 mg/l

TKN = 80mg/l

Criteria Effluent Limitations for Direct Discharge

BOD_5
The 30-day average will not exceed 30 mg/L.
The 7-day average will not exceed 45 mg/L.
$CBOD_5$ may be substituted for BOD_5. In those cases the following limits will apply:
30-day average will not exceed 25 mg/L.
The 7-day average will not exceed 40 mg/L.

Note: Parameter $CBOD_5$ limit, if substituted for the parameter BOD_5, should be at least 5 mg/L less than each numerical limit for the 30 day and 7 day average for the BOD_5 limit. The $CBOD_5$ test procedure suppresses the nitrification component in the BOD_5 test procedure, thereby reducing the value or effects and lowering the oxygen demand.

TSS
The 30-day average will not exceed 30 mg/L.
The 7-day average will not exceed 45 mg/L.

pH
The effluent pH values will be maintained between 6.0 and 9.0.

2.5.4.4 Gravity Sewer

Sanitary sewers shall be designed to flow at a maximum in the following way: Trunk Sewers and Mains – 80 percent full. Sanitary sewer velocities shall be designed to provide a minimum velocity of 0.6

meters per second (mps) or 2 feet per second (fps) at the ADD flow rate and a minimum velocity of 0.8 to 1.05 mps (2.5-3.5fps) at the peak flow rate. Pipe slopes shall be sufficient to provide the required minimum velocities and depths of cover on the pipe. Sanitary sewer velocities shall not exceed 3mps or 10 ft/sec.

Gravity sewer pipe shall be installed between manholes in straight and true runs with constant slope and direction. Provide adequate cover, minimum 800 mm (2'-8") for frost protection; minimum cover of 1200 mm (4'-0") shall be required to protect against potential traffic loads.

Sanitary sewer mains and laterals shall have a minimum slope of 1% for sizes 100 mm (4") to 200 mm (8"). For sizes larger than 200 mm (8") minimum slope shall be 0.5%. Under no circumstances shall the gravity sanitary sewer mains and laterals be constructed at slopes less than the minimum stated above.

2.5.4.5 Manholes

The Contractor shall provide standard depth manholes (MH), (depth may vary) an inside dimension of 1.2m (4 ft). Manholes shall be made of cast-in-place reinforced concrete with reinforced concrete cover. Alternate pre-cast manhole option shall taper to a 750 mm (30-inch) cast iron frame that provides a minimum clear opening of 600 mm (24 inches). In every case, the manholes, frames and covers shall be traffic rated, H-20 load rating. All manholes shall be provided with a concrete bench with a flow line trough, smoothly formed to guide waste flow to the outlet pipe from the inlet pipe(s). The top surface of the bench shall be above the crown of all pipes within the manhole. All surfaces of the bench shall be sloped smoothly toward the trough to guide flow, even under peak flow conditions.

Sanitary sewer lines shall enter at the manhole flow line. No internal drop structure shall be permitted. Contractor shall compact the base of the manhole to 95 % of MDD prior to construction.

2.5.4.5.1 Manhole Design Requirements

Manholes are required at junctions of gravity sewers and at each change in pipe direction, size or slope, except as noted hereinafter for building connections. Manholes are also required at all starts of the main line.

2.5.4.5.2 Spacing

The distance between manholes must not exceed 120m (400 ft) in sewers of less than 460mm (18 in) in diameter. For sewers 460mm (18 in) and larger, and for outfalls from wastewater treatment facilities, a spacing of up to 180m (600 ft) is allowed provided the velocity is sufficient to prevent sedimentation of solids.

2.5.4.5.3 Pipe Connections

The crown of the outlet pipe from a manhole shall be on line with or below the crown of the inlet pipe.

2.5.4.5.4 Frames and Covers

Frames and covers shall be cast iron, ductile iron or reinforced concrete, traffic rated in any case to an H-20 load rating. Cast iron frames and covers shall be traffic rated, circular with vent holes.

2.5.4.5.5 Steps for Manholes

Steps shall be cast iron, polyethylene coated, at least 15mm (5/8 in) thick, not less than 400mm (16 in) in width, spaced 300mm (12 in) on center.

2.5.4.6 Pipe

Pipe shall conform to the respective specifications and other requirements as follows: Provide Polyvinyl Vinyl Chloride (PVC) conforming to ASTM D 3034, Type PSM with a maximum SDR of 35, size 380 mm (15inch) or less in diameter. PVC shall be certified as meeting the requirements of ASTM D 1784, cell Class 12454 B. Minimum pipe sizes for the main lines shall be 200 mm (8 inch) and service lines shall be a minimum 100 mm (4 inch) diameter. Under no circumstance shall the Contractor use uPVC or HDEP. This shall not be permitted.

2.5.4.6.1 Fittings

Fittings shall be compatible with pipe supplied and shall have a strength not less than that of the pipe. Fittings shall conform to the respective specifications and requirements as follows: provide PVC fittings conforming to ASTM D 3034 for type PSM pipe.

2.5.4.6.2 Joints

Joints installation requirements shall comply with the manufacturers installation instructions. Flexible plastic pipe (PVC or high density polyethylene pipe) gasketed joints shall conform to ASTM D3212.

2.5.4.6.3 Branch Connections

Branch connections shall be made by use of regular fittings or solvent-cemented saddles as approved. Saddles for PVC pipe shall conform to Table 4 of ASTM D 3034.

2.5.4.6.4 The minimum depth of the cover over the pipe crown shall be be 0.8m (2 ft 8”).

2.5.4.6.5 Building Connections and Service Lines

Building connections and service lines will be planned to eliminate as many bends as practical and provide convenience in rodding. Bends greater than 45 degrees made with one fitting should be avoided; combinations of elbows such as 45-45 or 30-60 degrees should be used with a cleanout provided. Connections to other sewers will be made directly to the pipe with standard fittings rather than through manholes. However, a manhole must be used if the connection is more than 31m from the building cleanout. Service connection lines will be a minimum of 150 mm (6 inch) diameter and laid at a minimum 1% grade, but up to 2% as design parameters dictate. Service laterals shall be 200 mm (8 inch) and sloped to maintain the minimum velocity as described in paragraph “Gravity Sewer.”

2.5.4.6.6 Cleanouts

Cleanouts must be installed on all sewer-building connections to provide a means for inserting cleaning rods into the underground pipe. Install manufactured wye fittings. In lieu of a wye fitting, an inspection chamber may be installed. The inspection chamber shall be of the same construction as a manhole. Preferably the cleanout will be of the same diameter as the building sewer, and never be smaller than 150mm (6 in). Cleanouts shall be located within 1m from the building.

2.5.4.6.6.1 Grease Interceptors

Grease interceptors are used to remove grease from wastewater to prevent it from entering the sanitary sewer and septic systems. All Dining Facilities (DFACs) shall incorporate preliminary treatment with use of a grease interceptor prior to the sanitary sewer system. The grease interceptor shall be of reinforced cast-in-place concrete, reinforced precast concrete or equivalent capacity commercially available steel, with removable three-section, 9.5 mm checker-plate cover, and shall be installed outside the building. Steel grease interceptors shall in be installed in a concrete pit and shall be epoxy-coated to resist corrosion as recommended by the manufacturer. Concrete shall have 21 MPa minimum compressive strength at 28 days. The grease interceptor shall connect to the sanitary sewer system.

Provide access and adequate turnaround area capable of handling a pump truck to the grease interceptor. Install bollards around the grease interceptor. Under no circumstance shall the grease interceptor be installed inside the building. Provide outside water spigot for cleaning.

2.5.4.6.7 Field Quality Control

2.5.4.6.7.1 Field Tests and Inspections

The Contracting Officer will conduct field inspections and witness field tests specified in this section. The Contractor shall perform field tests and provide labor, equipment and incidentals required for testing.

Check each straight run of pipeline for gross deficiencies by holding a light in a manhole; it shall show a practically a full circle of light through the pipeline when viewed from the adjoining end of the line. When pressure piping is used in a non-pressure line for non-pressure use, test this piping as specified for non-pressure pipe.

Test lines for leakage by either infiltration tests or exfiltration tests. Prior to testing for leakage, backfill trench up to at least lower half of the pipe. When necessary to prevent pipeline movement during testing, place additional backfill around pipe to prevent movement during testing, but leaving joints uncovered to permit inspection. When leakage or pressure drop exceeds the allowable amount specified, make satisfactory correction and retest pipeline section in the same manner. Correct visible leaks regardless of leakage test results.

Infiltration tests and ex-filtration tests: Perform these tests for sewer lines made of specified material, not only concrete, in accordance with ASTM C 969M, ASTM C 969. Make calculations in accordance with the Appendix to ASTM C 969M and ASTM 969.

Low-pressure air tests: Perform tests as follows:

(a) Concrete pipe: Test in accordance with ASTM C 924M, ASTM C 924. Allowable pressure drop shall be given in ASTM C 924M ASTM C 924. Make calculations in accordance with the Appendix to ASTM C 924M, ASTM C 924;

(b) Ductile-iron pipe: Test in accordance with the applicable requirements of ASTM C 924M, ASTM C 924. Allowable pressure drop shall be as given in ASTM C 924M, ASTM C 924. Make calculations in accordance with the Appendix to ASTM C 924M, ASTM C 924;

(c) PVC Plastic pipe: Test in accordance with applicable requirements of UBPPA UNI-B-6. Allowable pressure drop shall be as given in UBPPA UNI-B-6. Make calculations in accordance with the Appendix to UBPPA UNI-B-6.

2.5.4.6.8 Deflection Testing

Deflection testing will not be required however; field quality control shall ensure that all piping is installed in accordance with deflection requirements established by the manufacturer.

2.5.5 Wastewater Treatment System

The Contractor shall design and construct a new aerated Waste Water Treatment Lagoon system next to the existing system located at Zafar Garrison based on the design population as stated in Section 01010 Scope of Work and influent and effluent wastewater characteristics per this technical requirements in paragraph 2.5.4.3. Contractor shall reference UFC 3-240-09FA, Domestic Waste Water Treatment, Chapter 14 as well as EPA Manual 625/1-83-015.

The contractor shall also design and construct sludge drying beds next to existing treatment system to handle the additional sludge load coming from the additional waste water load entering the lagoons.

The Contractor shall design and provide all necessary materials and labor to construct asanitary sewer collection system for the sanitary load, to include the future master planned facilities, and connect to the Waste Water Treatment System. This may include installing a new force main and any collection or lift stations as applicable and new distribution lines directly to the Waste Water Treatment Lagoons

Sludge beds shall be constructed in accordance with guidance provided in UFC 3-240-09FA Domestic Wastewater Treatment, Chapter 16, Sludge Handling, Treatment and Disposal.

Gravel access capable of handling a pump truck shall be constructed to the lagoons as well as to the sludge drying beds. The lagoons as well as drying beds shall also have access to the bottom of the pond and bed to allow heavy equipment, such as dozers, backhoes etc. to enter and cleanout out the sludge.

2.5.5.1 Site Survey

The Contractor shall conduct a topographic survey to determine existing site characteristics. The Contractor shall conduct a utility survey to determine the locations of any nearby water lines, wells, sanitary sewers, storm sewers and electrical lines.

2.5.6 Storm Sewer Systems

Oil/water separators shall be utilized for all drains from industrial sites. Separators shall be installed as close as possible from the drain location. Storm sewer system shall not be mixed with sanitary sewer system and shall be in accordance with UFC 3-240-03 latest edition.

Contractor shall provide erosion control measures for all drainage ditches. A backwater analysis will be provided with the design submittal.

All drainage channels shall not be bare dirt. It shall either be lined with rip-rap or concrete. Contractor shall provide calculations that appropriate erosion control measures are been implemented.

3.0 ARCHITECTURAL REQUIREMENTS

3.1 GENERAL

All material approved shall become standardized material to be used throughout the facilities under contract. Different sub-contractors shall not use different material or standards under the contract. Intent

of the project is to use locally procured materials (unless specified otherwise) and labor to the maximum extent possible while satisfying seismic building code. Conflicts between criteria shall be brought to the attention of the Contracting Officer for resolution. In such instances, the Contractor shall furnish all available information with justification to the Contracting Officer. **All building exterior walls shall be constructed with reinforced CMU, insulated concrete sandwich panels, reinforced concrete or approved equivalent.**

3.2 DESIGN CRITERIA

The Codes, Standards, and Regulations listed herein shall be used in the construction of this project. The publications shall be the referenced most recent editions. Standards other than those mentioned may be accepted provided they meet the minimum requirements and the contractor shall submit proof of equivalency to the Contracting Officer for approval.

IBC - International Building Code, 2006
NFPA 101 - Life Safety Code, 2006.

3.3 LIFE SAFETY/ FIRE PROTECTION/ HANDICAPPED ACCESSIBILITY

To the extent possible, all facilities will be designed in accordance with recognized industry standards for life safety and building egress. An adequate fire alarm system, fire extinguishers, and smoke alarms shall all be included as required. If a sprinkler system is required by building code, a waiver will have to be obtained before construction notice to proceed is issued. However, due to the lack of adequate water volume and pressure, sprinkler systems may not be feasible. The facility shall comply with all other safety requirements of NFPA 101. In keeping with the intended function of these facilities, handicapped accessibility will not be incorporated into this project. Due to the war contingency requirement, it is assumed that only able-bodied military and civilian personnel will use the facilities listed herein.

3.4 ANTITERRORISM/ FORCE PROTECTION

Force protection/anti-terrorism measures for this location shall be followed and incorporated into this project in accordance with the referenced DoD Regulations. Information regarding force protection may be found herein and at the following link: www.tisp.org/files/pdf/dodstandards.pdf .

3.5 EXCAVATION

Trench excavation shall be made for concrete footings. Trenches shall be a minimum of .8 meter deep. Trenches deeper than 1.5 meters shall have protective shoring to protect workers or have the sides of the trench sloped back at a slope of 1.5:1. Care shall be taken when backfilling of foundation trenches to avoid damage to walls. Any excess dirt shall become the property of the Contractor and shall be removed from the site to a location approved by the Contracting Officer.

3.6 THERMAL PERFORMANCE OF EXTERNAL BUILDING ASSEMBLIES

External building assemblies shall meet the requirements of TI-800, Design Criteria, UFC 3-400-01 Design: Energy Conservation, and ASHRAE Standard 90.1, latest editions, but shall meet the following minimum requirements, unless specifically stated elsewhere:

Assembly	Minimum Thermal Value
Exterior walls (above grade)	RSI 1.936 (R 13)
Ceilings/roof	RSI 3.345 (R 30)
Floor (over unheated space)	RSI 3.345 (R 19)

Exterior doors	RSI 0.25 (R 1.43)
Exterior windows/(glazing within doors)	RSI 0.308(R 1.75)
Skylights	RSI 0.18 (R 1.02)

RSI measured in m2-K/W, R measured in sqft-F-hr/BTU. The design analysis shall include exterior building assembly R-value calculations for each separate assembly. The calculations shall be in accordance with ASHRAE Fundamentals or EN ISO 6946. The calculations shall indicate the thermal conductivity, thickness, and R-value of each assembly component and the overall R-value for the assembly. The assembly R-value calculations shall investigate the effects of thermal bridging from the use of metal building material such as metal wall studs, roof Purlins, wire mesh wall ties or bolts, structural members, etc.

Window glazing surface area shall be determined based on the architectural design per each building and shall not be an assumed percentage of the wall area.

3.7 CONCRETE & MASONRY

3.7.1 Concrete

Place 150 mm (6”) of capillary water barrier below areas to receive a concrete slab on properly compacted soil free of organic material. Concrete flooring in wet areas shall slope to the floor drain and not allow for water to puddle. Concrete slabs in all areas shall not be placed prior to inspection and approval of piping and sub-surface by the Contracting Officer. Foundation trenches shall be level and free of loose material. Trenches shall be inspected and approved by the Contracting Officer prior to placing of any concrete foundations. See paragraph 4 for structural characteristics of concrete and reinforcing steel for foundations and slabs.

3.7.2 Insulated Concrete Sandwich Wall System (3-D Building System)

As an option to standard masonry construction, the Contractor may construct walls of single story buildings using an insulated concrete sandwich wall system. The insulated concrete sandwich wall system shall be field fabricated and composed of a 76 mm (3 inch) expanded polystyrene core that spans in a single piece from floor elevation to top of wall elevation. The polystyrene core shall have a welded wire fabric, 50 mm x 50 mm (2 inch x 2 inch) mesh, 2.52mm (12.5 gauge) wire, attached to both faces of the polystyrene core. The welded wire mesh shall be installed at 13mm from the face of the polystyrene core. The welded wire mesh on each face shall be attached to each other and the polystyrene core with diagonal truss wires. Apply sprayed concrete (shotcrete) to a minimum thickness of 45mm (1-3/4 inch) or as structural calculations require, whichever is greater. Method of placing the shotcrete shall be in conformance with ACI 506R-85. Concrete finishing shall be done by appropriate hand tools (darby, trowel, etc.) to provide the desired finish effect.

3.7.3 Masonry

Storage of masonry materials shall be in a dry place or materials shall be covered with a plastic protective layer. Cover open walls each day to keep them protected and dry. Concrete masonry units (CMU) for exterior walls shall be either 190 mm or 290 mm wide x 390 mm x 190 mm high as shown on drawings. All cells shall be fully grouted and reinforced. They shall be installed in running bond level and plumb. Mortar joints shall be 10 mm on all sides between CMU. Joints shall be struck with a concave tool to provide a smooth recessed curved surface. Install only quality units. The surface shall be free of chips, cracks, or other imperfections that would detract from the overall appearance of the finished wall. Defective CMU or mortar shall be rejected.

3.8 METAL

3.8.1 Building Systems

3.8.1.1 Arch Span

Insulated Arch-Span metal roofing systems shall be supported by reinforced concrete stem walls approximately 2.5 m in height. Stem walls shall be insulated and finished with gypsum board or plaster on the interior, and finished with stucco on the exterior. The floor slab shall be reinforced concrete with a minimum thickness of 150mm placed on a clean vapor barrier above a capillary water barrier of 150mm minimum thickness on properly compacted soil. Exterior walls shall be insulated with a minimum of R-13 insulation, and provide a minimum of R-30 insulation for the roof. The roof insulation system shall be spray applied and harden to a durable rigid surface, as per the arch span manufacturer's standards.

Ribbed steel roof panels shall be mechanically fabricated from prefinished steel coil and joined by machines and operators, all certified by the arch span building manufacturer. The contractor shall present certificates of manufacturer's training for machine operators, and certificates of authenticity for proprietary machines and equipment.

Only prefinished steel coil certified by the arch-span system manufacturer shall be used on this project. Fasteners for accessories shall be manufacturer's standard. All materials and Concealed fasteners for steel roof panels shall be zinc-coated steel, aluminum, corrosion resisting steel, or nylon capped steel. Fasteners for structural connections shall provide both tensile and shear strength of not less than 350 kg per fastener.

3.8.1.2 Pre-Engineered Metal Building Systems

Metal building systems shall comply with the requirements of the MBMA Low Rise Building Systems Manual-2002. Facilities designated as long-span, shall have no interior columns.

3.8.2 Trim

3.8.2.1 Metal Window Sills

Galvanized metal window sills, 1 mm (20-gage), shall be installed on the exterior of all windows. The metal window sills shall have a turn down of 50 mm over the exterior masonry and stucco. Metal sills shall extend from side to side of the masonry opening in a single piece. Extend the metal window sill a minimum of 20 mm under the bottom of the aluminum windows. Install masonry mortar as required for a smooth surface under the window sills. Sills shall slope a minimum of 6mm to the exterior and not allow water to puddle.

3.8.2.2 Metal Fascia & Soffit

No wood fascias and/or soffits are allowed. Use metal fascias and soffits throughout. Extend roof decking out over fascia a minimum of 20 mm. Provide a 40 mm drip flashing over edge of roof decking so that it extends past bottom of decking on all sides of the building. Provide continuous soffit venting of all overhangs at both bottom and top of roof slope.

3.8.3 Dining Facilities

3.8.3.1 Steel Cook Top

Provide steel cook top in kitchen minimum thickness of 25 mm. Provide circular cut outs. Consult with the Contracting Officer for the diameter of circular cutouts. Provide steel infill plates for all cut out openings. Cook top can be made of several pieces for ease of handling. Adjacent plates shall be tight fitting to each other.

3.8.3.2 Pass-Through Counter Top

Provide 1.6 mm (16 gauge) stainless steel, or 40 mm marble, pass through counter tops at openings between the kitchen and dining area. Edges shall be turned down 30 mm and corners shall be welded and ground smooth. Provide anchor angles welded to the bottom of the counters to anchor tops to masonry walls below. Provide six (6) anchors on the Dish Return Counter, three (3) on each side of the wall. Provide eight (8) anchors on the Serving Counter, four (4) on each side of the wall. Anchor angles to wall with masonry expansion sleeves and stainless steel screws. Counter tops are to be 600 mm wide x length of opening shown.

3.8.3.3 Fire Counter Shutter (Dining Facilities)

Fire Counter Shutters shall be installed in conjunction with the Pass-Through Counter Tops described in the paragraph above. Fire counter shutters shall be used to separate the kitchens from the dining areas, and shall be U.L labeled for gypsum board, masonry and steel openings, and rated at 90 minutes in full compliance with NFPA-80 standards. Finish of shutter, guides and hoods shall be stainless steel. System shall be activated by 74˚ C (1 65˚ F) fusible links, and by electrical switches located near exit doors. Bottom bar sliding bolt locks shall be provided to secure the shutters in the down position; bolts shall be operated from the kitchen side of the shutter.

3.9 CARPENTRY

The use of wood framing as indicated below is acceptable only where allowed by IBC 2003 and NFPA 101.

3.9.1 Wood Purlins

If Contractor chooses to utilize wood purlins, provide and install roof purlins of natural wood, locally available material 1 meter on center securely wedged between steel H structural joists. Tightly fit 30 mm boards over roof structure and nail into wood purlins. New roofing shall extend a minimum of 300 mm past the exterior surface of the wall.

3.9.2 Wood Battens

If Contractor chooses to utilize wood ceiling batten strips, wood ceiling batten strips, 20 mm x 60 mm, shall be nailed to the bottom of the wood purlins. Battens shall be spaced at 400 mm on center (or per UBC requirements if sheetrock is substituted for plaster). This is for the support of a plaster ceiling.

3.10 ROOFING AND WEATHERPROOFING

3.10.1 Sloped Roofs

On metal sloping roofs provide and install minimum .70 mm (24 gauge) galvanized standing seam design. **Metal panels shall be continuous from ridge to eve of roof**. Standing Steam panel width shall be by manufacturer's recommendation to prevent canning, warping, and deformation. Roof sealant or adhesive shall be placed over each anchor head. Roofing system shall include all edge, ridge and penetration flashings necessary for a watertight installation, sheathing deck with water barrier felt layer under the metal roof panels and as described in this section. Rigid board insulation may also be installed between the felt layer and metal panels. Roofing shall be galvanized mil finish. Provide continuous ridge vents on all gable roofs. **Minimum slope for metal roof shall be no less than 2:12. In area where winters receive snow loads, minimum slope of metal roof shall be no less than 3:12.**

3.10.2 Low Slope Roofs

Provide and install 3 ply built up roofing over concrete deck. Contractor may propose to the Contracting Officer an alternate roofing system with justification for consideration and alternate pricing. Concrete roof deck shall slope 21mm per m. **Metal Roofing Panels shall not be used on low slope roofs with less than 2:12 slope.**

3.10.2.1 Built-up Roofing System

A Insulated-Deck, Coal Tar, Glass-Fiber, Aggregate Roofing (ICGA-BUR): Provide built-up, aggregate-surfaced roof system with coal tar bitumen and glass-fiber ply felts (roof manufacturer's separation layers) for layup as indicated.

3.10.2.1.1 Primer: ASTM D 41primer as recommended by roofing manufacturer.

3.10.2.1.2 Coal Tar Bitumen: ASTM D 450, Type III, as an option to asphalt.

3.10.2.1.3 Bitumen Membrane which meets the following:

a. ASTM D312 or the equivalent EN 1849-1 for thickness and unit weight,
b. ASTM D312 or the equivalent EN-1426 for penetration,
c. ASTM D312 or the equivalent EN-1427 for softening point
d. ASTM D312 or the equivalent TS 11758-1 for flash point or heat stability
e. ASTM D4601 or the equivalent TS 11758-1 for width and area of roll
f. ASTM D4601 (moisture percentage) or the equivalent EN 1928 (water tightness)
g. ASTM D226 (pliability) or the equivalent EN 1109 (cold bending).

3.10.2.1.4 Glass Roofing Felt: ASTM D 2178, Type IV or VI, except felts for coal tar systems shall be impregnated with a bituminous resin coating which is compatible with coal tar bitumen.

3.10.2.1.5 Organic Felt Base: ASTM D 2626 for use with asphalt roofing system.

3.10.2.1.6 Organic Felt Base: ASTM D 226 for use with asphalt roofing system and ASTM D 227 for use with coal tar roofing system. Organic felts may be used for bitumen stops and edge envelopes.

3.10.2.1.7 Insulation: 5cm (2 inch) thick extruded polystyrene rigid thermal insulation boards, conforming DIN, EN 13164 BS, EN 13164, k=0.2 @ 75 degrees F mean temperature, 2.82 kg/sq cm (40 lbs/sq in) compressive strength, hydrophobic, Type VI.

3.10.2.2 Roof Membrane Installation

a. Prime surface of concrete deck with asphalt primer per manufacturers recommended application rate.

b. Cant Strips/Tapered-Edge Strips: Wood, not less than 89 mm (3-1/2 inches) high, 45-degree insulation cant strips at juncture of membrane with vertical surface. Provide tapered-edge strips at perimeter edges of roof that do not terminate at vertical surfaces.

c. Base Layer: Install one lapped course of base sheet. Attach first layer of roofing membrane material to substrates and elsewhere as indicated. Mop to non-nailable substrate with hot bitumen or apply with torch method per manufacturer's specifications

c. Second Layer: Install second layer of roofing membrane material over the first course staggering joints and seams in both directions by at least 300 mm. Mop top layer of membrane to base layer, or attach via torch method per manufacturer's specifications.

3.10.2.3 Insulation Installation

Comply with insulation manufacturer's instructions and recommendations for handling, installing, and bonding or anchoring insulation to substrate. Insulation boards shall be installed loose, without glue, in staggered manner. Attention should be paid not to leave separation along edges. Where overall insulation thickness is 50 mm (2 inches) or greater, install required thickness in two layers with joints of second layer offset from joints of first layer a minimum of 300 mm (12 inches) each direction. Trim surface of insulation where necessary at roof drains so completed surface is flush with drain ring. Polyester felt or geo-textile shall be installed over insulation layers as a filter layer to prevent the passage of fines in gravel layer to lower strata.

3.10.2.4 Composition Flashing And Stripping

a. Install composition flashing at cant strips, at other sloping and vertical surfaces, at roof edges, and at penetrations through roof. Install composition flashing in accordance with membrane manufacturers specifications. Nail or provide other forms of mechanical anchorage of composition flashing to vertical surfaces as recommended by manufacturer of primary roofing materials.

b. Install composition stripping where metal flanges are set on roofing. Provide not less than two plies of woven glass-fiber fabric, each set in a continuous coating of roofing cement and extended onto the deck 100 mm to 150 mm (4 inches and 6 inches), respectively. Except where concealed by aggregate surfacing or elastic flashing, apply a heavy coating of roofing cement over composition stripping.

c. Roof Drains: Fill clamping ring base with a heavy coating of roofing cement. Set built up roofing membrane in to the clamping ring base and fix the drain top on it.

d. Allow for expansion of running metal flashing and edge trim that adjoins roofing. Do not seal or bond built-up roof membrane or composition flashing and stripping to metal flanges that are over 914 mm (3 feet) in length.

e. Counter-flashings: Counter-flashings, cap flashings, expansion joints and similar work to be coordinated with built-up roofing work, are specified in other sections of these specifications.

f. Roof Accessories: Miscellaneous sheet metal accessory items, including insulation vents and other devices and major items of roof accessories to be coordinated with built-up roofing work.

3.10.2.5 Gravel Layer

A gravel layer of 16 to 32 mm diameter stone will be laid in at least 5cm thick on top of the filter layer in non-trafficable flat roofs The gravel layer will be applied as soon as possible to prevent UV damage and/or wind damage to insulation and filter layers

3.10.3 Flashing & Sheet Metal

3.10.3.1 Materials

Any metal listed by ASTM, DIN, BS or EN standards. Manual for a particular item may be used, unless otherwise specified or indicated. Materials shall conform to the requirements specified below and to the thicknesses and configurations established in ASTM, DIN, BS or EN standards. Different items need not be of the same metal, except that if copper is selected for any exposed item, all exposed items shall be copper.

3.10.3.2 Steel Sheet, Zinc-Coated (Galvanized)

Zinc coated steel conforming to ASTM A 525, DIN BS or EN Standards.

3.10.3.3 Aluminum wall capping and expansion joint profiles.

Aluminum wall capping shall conform to ASTM B 209 M, DIN 18339, BS or EN Standards.

3.10.3.4 Roof Gutters
Roof gutters shall be installed as indicated. Roof gutters shall be rigidly attached to the building. Supports for roof gutters shall be spaced according to manufacturer's recommendations.

Gutters shall have a slope between 1":33'-0" (1:400) and 1":16'-0" (1:200) for proper drainage.

3.10.3.5 Downspouts

Downspouts shall be designed and fabricated on site. Unless otherwise specified or indicated, exposed edges shall be folded back to form a 13 mm (1/2 inch) hem on the concealed side, and bottom edges of exposed vertical surfaces shall be angled to form drips. Bituminous cement shall not be placed in contact with roofing membranes other than built-up roofing. Downspouts shall be rigidly attached to the building with supports a minimum of 1.5 M apart.

3.10.3.6 Wall, Floor, Ceiling Expansion Joints in Plaster & Stucco

Expansion joints shall be provided as specified in ASTM, DIN 18339, BS or EN Standards.

3.10.3.7 Connections and Jointing

3.10.3.7.1 Soldering

Soldering shall apply to copper and stainless steel items. Edges of sheet metal shall be pre-tinned before soldering is begun. Soldering shall be done slowly with well heated soldering irons so as to thoroughly heat the seams and completely sweat the solder through the full width of the seam. Edges of stainless steel to be pre-tinned shall be treated with soldering acid flux. Soldering shall follow immediately after application of the flux. Upon completion of soldering, the acid flux residue shall be thoroughly cleaned from the sheet metal with a water solution of washing soda and rinsed with clean water.

3.10.3.7.2 Seaming

Flat-lock and soldered-lap seams shall finish not less than 25 mm. wide. Unsoldered plain-lap seams shall lap not less than 75 mm. unless otherwise specified. Flat seams shall be made in the direction of the flow.

3.10.3.7.3 Cleats

A continuous cleat shall be provided where indicated or specified to secure loose edges of the sheet metalwork. Butt joints of cleats shall be spaced approximately 3 mm. apart. The cleat shall be fastened to supporting wood construction with nails evenly spaced not over 300 mm. on centers. Where the fastening is to be made to concrete or masonry, screws shall be used and shall be driven in expansion shields set in concrete or masonry.

3.10.3.8 Flashing

Flashing shall be installed at locations indicated and as specified below. Sealing shall be according to the flashing manufacturer's recommendations. Flashings shall be installed at intersections of roof with vertical surfaces and at projections through roof, except that flashing for heating and plumbing, including

piping, roof and floor drains, and for electrical conduit projections through roof or walls are specified in other sections. Except as otherwise indicated, counter flashings shall be provided over base flashings. Perforations in flashings made by masonry anchors shall be installed on top of joint reinforcement. Lashing shall be formed to direct water to the outside of the system.

3.10.3.8.1 Through-wall Flashing

Through-wall flashing includes sill, lintel, and spandrel flashing. The flashing shall be laid with a layer of mortar above and below the flashing so that the total thickness of the two layers of the mortar and flashing are the same thickness as the regular mortar joints. Flashing shall not extend further in to the masonry backup wall than the first mortar joint. Joints in flashing shall be lapped and sealed. Flashing shall be one piece for lintels and sills.

3.10.3.8.2 Lintel Flashing

Lintel flashing shall extend the full length of lintel. Flashing shall extend through the wall one masonry course above the lintels and shall be bent down over the vertical leg of the outer steel lintel angle not less than 50 mm, or shall be applied over top of masonry and pre-cast concrete lintels. Bed joints of lintels at joints shall be under laid with sheet metal bond breaker.

3.10.3.8.3 Sill Flashing

Sill flashing shall extend the full width of the sill and not less than 100 mm beyond ends of sill except at joint where the flashing shall be terminated at the end of the sill.

3.10.3.8.4 Wall Capping

Wall Capping shall be installed according to the manufacturer’s recommendations.

3.10.4 Sealants

Provide a sealant compatible with the material(s) to which it is applied. Do not use a sealant that has exceeded shelf life or has jelled and cannot be discharged in a continuous flow from the gun. Apply the sealant in accordance with the manufacturer's instructions with a gun having a nozzle that fits the joint width. Force sealant into joints to fill the joints solidly without air pockets. Tool-smooth with fresh sealant after application to ensure proper adhesiveness. Sealant shall be uniformly smooth and free of wrinkles. Upon completion of sealant application, roughen partially filled or unfilled joints; apply sealant, and tool smooth as specified. Sealer shall be applied over the sealant when and as specified by the sealant manufacturer.

3.10.4.1 Interior Sealant

ASTM C 834 or ASTM C 920, Type S or M, Grade NS, Class 12.5. Use NT, DIN, BS, or EN equal standards.

3.10.4.2 Exterior Sealant

For joints in vertical and horizontal surfaces, provide ASTM C 920, Type S or M, Grade NS, DIN, BS, or EN equal standards.

3.10.4.3 Floor Joint Sealant

(ASTM C 920) Type S or M, Grade P, class 25, use T

3.10.4.4 Primers

Provide a non-staining, quick-drying type and consistency recommended by the sealant manufacturer for the particular application.

Immediately prior to application of the sealant, clean out loose particles from joints. Where recommended by sealant manufacturer, apply primer to joints in concrete masonry units, wood, and other porous surfaces in accordance with sealant manufacturer's instructions. Do not apply primer to exposed finish surfaces.

3.10.4.5 Bond Breakers

Provide the type and consistency recommended by the sealant manufacturer to prevent adhesion of the sealant to backing or to bottom of the joint.

Provide bond breakers to the back or bottom of joint cavities, as recommended by the sealant manufacturer for each type of joint and sealant used, to prevent sealant from adhering to these surfaces. Carefully apply the bond breaker to avoid contamination of adjoining surfaces or breaking bond with surfaces other than those covered by the bond breaker.

3.10.4.6 Backing

Backing shall be 25 to 33 percent oversize for closed cell and 40 to 50 percent oversize for open cell material, unless otherwise indicated.

3.10.4.7 Cleaning Solvents

Provide type(s) recommended by the sealant manufacturer except for aluminum and bronze surfaces that will be in contact with sealant.

3.10.4.8 Surface Preparation

Surfaces shall be clean, dry to the touch, and free from dirt frost, moisture, grease, oil, wax, lacquer, paint, or other foreign matter that would tend to destroy or impair adhesion. Oil and grease shall be removed with solvent and surfaces shall be wiped dry with clean cloths. When resealing an existing joint, remove existing calk or sealant prior to applying new sealant. For surface types not listed below, the sealant manufacturer shall be contacted for specific recommendations.

3.10.4.9 Masking Tape

Masking tape shall be placed on the finish surface on one or both sides of a joint cavity to protect adjacent finish surfaces from primer or sealant smears. Masking tape shall be removed within 10 minutes after joint has been filled and tooled.

3.10.4.10 Backstops

Install backstops dry and free of tears or holes. Tightly pack the back or bottom of joint cavities with backstop material to provide a joint of the depth specified.

3.10.4.11 Protection

Protect areas adjacent to joints from sealant smears. Masking tape may be used for this purpose if removed 5 to 10 minutes after the joint is filled.

3.10.4.12 Final Cleaning

Upon completion of sealant application, remove remaining smears and stains and leave the work in a clean and neat condition.

a. Masonry and Other Porous Surfaces: Immediately scrape off fresh sealant that has been smeared on masonry and rub clean with a solvent as recommended by the sealant manufacturer. Allow excess sealant to cure for 24 hour then remove by wire brushing or sanding.

b. Metal and Other Non-Porous Surfaces: Remove excess sealant with a solvent-moistened cloth.

3.11 WINDOWS, DOORS & GLAZING

3.11.1 Windows

3.11.1.1 Materials

(a) Aluminum Extrusions: Provide alloy and temper recommended by the window manufacturer for the strength, corrosion resistance, and application of required finish, meeting the DIN 1725 raw material requirements, but not less than 215 N/mm2 ultimate tensile strength and not less than 1.5 mm thick at any location for main frame and sash members.

(b) Fasteners: Provide aluminum, nonmagnetic stainless steel, epoxy adhesive, or other materials warranted by the manufacturer to be non-corrosive and compatible with aluminum window members, trim, hardware, anchors, and other components of window units.

1. Reinforcement: Where fasteners screw-anchor into aluminum less than 0.125 inch thick, reinforce the interior with aluminum or nonmagnetic stainless steel to receive screw threads or provide standard non-corrosive pressed-in splined grommet nuts.

2. Exposed Fasteners: Except where unavoidable for application of hardware, do not use exposed fasteners. For application of hardware, use fasteners that match the finish of the member or hardware being fastened, as appropriate.

(c) Anchors, Clips, and Window Accessories: Fabricate anchors, clips, and window accessories of aluminum, nonmagnetic stainless steel, or hot-dip zinc-coated steel or iron complying with the requirements of DIN 1748; provide sufficient strength to withstand design pressure indicated. As a minimum provide 3 anchors on each side of the frame.

(d) Compression-Type Glazing Strips and Weatherstripping: Unless otherwise indicated, and at the manufacturer's option, provide compressible stripping for glazing and weatherstripping such as molded EPDM or neoprene gaskets.

(e) Sealant: For sealants required within fabricated window units, provide type recommended by the manufacturer for joint size and movement. Sealant shall remain permanently elastic non-shrinking, and non-migrating. Comply with Sealants of these specifications for selection and installation of sealants.

(f) Wire Fabric Insect Screen shall be permanently fixed to the exterior, except for guard towers.

3.11.1.2 Hardware

A. General: Provide the manufacturer's standard hardware fabricated from aluminum, stainless steel, or other corrosion-resistant material compatible with aluminum and of sufficient strength to perform the function for which it is intended.

3.11.1.3 Fixed, Casement, Projected and Horizontal Sliding Windows

Provide window units meeting UL 752, level 5, AK-47 resistance. This standard shall apply to all window units within guard shack, guard house, guard tower, and guard rooms in Headquarters Building. Provide cam action sweep sash lock and keeper at meeting rails. All other glazing shall be minimum 6mm laminated with .75mm polyvinyl-butyral (PVB) interlayer per UFC 4-010-01.

3.11.1.4 Fabrication

Provide horizontally sliding aluminum windows with factory finish in all buildings to fit the masonry openings. Window openings shall be provided with insect screening permanently fixed to the exterior. Provide a locking device on the interior of each window. Provide anchors on each side of the frame into the adjoining masonry, 3 on each side. Provide weather stripping system for all exterior windows and doors.

3.11.1.5 Finishes

Apply baked enamel in compliance with paint manufacturer's specifications for cleaning, conversion coating, and painting.

(a) Color: White meeting the requirements of DIN 50018

3.11.1.6 Inspection

Inspect openings before beginning installation. Verify that rough or masonry opening is correct and the sill plate is level. Masonry surfaces shall be visibly dry and free of excess mortar, sand, and other construction debris.

3.11.1.7 Installation

Comply with manufacturer's specifications and recommendations for installation of window units, hardware, operators, and other components of the work. Set window units plumb, level, and true to line, without warp or rack of frames or sash. Provide proper support and anchor securely in place. Set sill members and other members in a bed of compound or with joint fillers or gaskets, as shown, to provide weather-tight construction. Refer to the Sealant sections for compounds, fillers, and gaskets to be installed concurrently with window units. Coordinate installation with wall flashings and other components of the work.

3.11.1.8 Adjusting

Adjust operating sash and hardware to provide a tight fit at contact points and at weather-stripping for smooth operation and a weather-tight closure.

3.11.1.9 Cleaning

Clean aluminum surfaces promptly after installation of windows. Exercise care to avoid damage to protective coatings and finishes. Remove excess glazing and sealant compounds, dirt, and other substances. Lubricate hardware and other moving parts.

3.11.2 Doors

All exterior doors (entry and exit doors) shall be heavy duty metal doors with metal frames. Interior door shall be hollow metal doors with hollow metal frames. All glazed doors shall have 5 mm single glazing in the upper half of the door. Heavy gauge metal exterior doors are required for security of unmanned buildings, such as water treatment building, power station, warehouses, and other buildings requiring higher security. Commercial duty lock sets and hardware shall be used on all doors. Install required

louvers, as called for in paragraph 6, in the lower portion of the door. Provide (3) hinges on all doors. Hinges shall be the 5 knuckle type or equivalent. Provide door handles and locksets that can be locked with a key on all doors. All door locks shall have a thumb latch on inside of door such that no key is necessary to exit the room or building. Coordinate the final keying schedule with Contracting Officer prior to ordering lock sets. Generally each building should have 8 master keys fitting all locks, 8 sub-master keys fitting all exterior doors and 3 keys each for each interior door. Include 25% spare key blanks for the amount of keys provided per building. Provide numbering system identifying key to associated room door. All glazing in or adjacent to doors shall be tempered per IBC. Provide weather stripping system for all exterior doors.

3.11.2.1 Solid Plastic & Phenolic doors

Solid Plastic & Phenolic doors and frames are for interior wet room use only. Solid Plastic & Phenolic doors and frames be used for bathrooms, shower rooms, and toilets rooms.

3.11.2.2 Steel Doors

SDI A250.8, except as specified otherwise. Prepare doors to receive specified hardware. Undercut where indicated. Exterior doors shall have top edge closed flush and sealed to prevent water intrusion. Doors shall be 44.5 mm thick, unless otherwise indicated. Doors shall be constructed using heavy gauge steel with minimum thickness of 1.2 mm.

3.11.2.2.1 Accessories

3.11.2.2.1.1 Interior Louvers

SDI 111-C, Louvers shall be stationary sight-proof or lightproof type as required. Louvers for lightproof doors shall not transmit light. Detachable moldings on room or non security side of door; on security side of door, moldings to be integral part of louver. Form louver frames of 0.9 mm thick steel and louver blades of a minimum 0.6 mm. Louvers for lightproof doors shall have minimum of 20 percent net-free opening. Sight-proof louvers shall be inverted "V" blade design with minimum 55 or inverted "Y" blade design with minimum 40 percent net-free opening.

3.11.2.2.1.2 Exterior Louvers

Louvers shall be inverted "Y", "V" or "Z" type. Weld or tenon louver blades to continuous channel frame and weld assembly to door to form watertight assembly. Form louvers of hot-dip galvanized steel of same gage as door facings. Louvers shall have steel-framed insect screens secured to room side and readily removable. Provide aluminum wire cloth, 7 by 7 per 10 mm or 7 by 6 per 10 mm mesh, for insect screens.

3.11.2.2.1.3 Astragals

Provide overlapping steel astragals on pairs of exterior steel doors which will not have aluminum astragals or removable mullions. For interior pairs of fire rated and smoke control doors, provide stainless steel astragals complying with NFPA 80 for fire rated assemblies and NFPA 105 for smoke control assemblies.

3.11.2.2.1.4 Moldings

Provide moldings around glass of interior and exterior doors. Provide non-removable moldings on outside of exterior doors and on corridor side of interior doors. Other moldings may be stationary or removable. Secure inside moldings to stationary moldings, or provide snap-on moldings. Moldings shall interlock at intersections and shall be fitted and welded to stationary moldings.

3.11.2.2.2 Standard Steel Frames

SDI A250.8, except as otherwise specified. Form frames to sizes and shapes indicated, with welded corners or knock-down field-assembled corners. Provide steel frames for doors, transoms, sidelights, mullions, cased openings, and interior glazed panels, unless otherwise indicated.

3.11.2.2.2.1 Welded Frames

Continuously weld frame faces at corner joints. Mechanically interlock or continuously weld stops and rabbets. Grind welds smooth.

3.11.2.2.2.2 Mullions and Transom Bars

Mullions and transom bars shall be closed or tubular construction and shall member with heads and jambs butt-welded thereto or knock-down for field assembly. Bottom of door mullions shall have adjustable floor anchors and spreader connections.

3.11.2.2.2.3 Stops and Beads

Form stops and beads from 0.9 mm thick steel. Provide for glazed and other openings in standard steel frames. Secure beads to frames with oval-head, countersunk Phillips self-tapping sheet metal screws or concealed clips and fasteners. Space fasteners approximately 300 to 400 mm on centers; miter molded shapes at corners; butt or miter square or rectangular beads at corners.

3.11.2.2.3 Anchors

Provide anchors to secure the frame to adjoining construction. Provide steel anchors, zinc-coated or painted with rust-inhibitive paint, anchors not lighter than 1.2 mm thick.

3.11.2.2.3.1 Wall Anchors

Provide at least three anchors for each jamb. For frames which are more than 2285 mm in height, provide one additional anchor for each jamb for each additional 760 mm or fraction thereof.

a. Masonry: Provide anchors of corrugated or perforated steel straps or 5 mm diameter steel wire, adjustable or T-shaped;

b. Completed openings: Secure frames to previously placed concrete or masonry with expansion bolts

3.11.2.2.3.2 Floor Anchors

Provide floor anchors drilled for 10 mm anchor bolts at bottom of each jamb member. [Where floor fill occurs, terminate bottom of frames at the indicated finished floor levels and support by adjustable extension clips resting on and anchored to the structural slabs.

3.11.2.2.4 Fire and Smoke Doors and Frames

The requirements of NFPA 80 and NFPA 105 respectfully shall take precedence over details indicated or specified.

3.11.2.2.5 Weather-stripping, Integral Gasket

Black synthetic rubber gasket with tabs for factory fitting into factory slotted frames, or extruded neoprene foam gasket made to fit into a continuous groove formed in the frame, may be provided in lieu

of head and jamb seals. Insert gasket in groove after frame is finish painted.

3.11.2.2.6 Hardware Preparation

Provide minimum hardware reinforcing gages as specified in ANSI A250.6. Drill and tap doors and frames to receive finish hardware. Prepare doors and frames for hardware in accordance with the applicable requirements of SDI A250.8 and ANSI A250.6. For additional requirements refer to BHMA A115. Drill and tap for surface-applied hardware at the project site. Build additional reinforcing for surface-applied hardware into the door at the factory. Locate hardware in accordance with the requirements of SDI A250.8, as applicable. Punch door frames, with the exception of frames that will have weather-stripping or lightproof or soundproof gasketing, to receive a minimum of two rubber or vinyl door silencers on lock side of single doors and one silencer for each leaf at heads of double doors. Set lock strikes out to provide clearance for silencers.

3.11.2.2.7 Finishes

All surfaces of doors and frames shall be thoroughly cleaned, chemically treated and factory primed with a rust inhibiting coating as specified in SDI A250.8, or paintable A25 galvannealed steel without primer. Where coating is removed by welding, apply touchup of factory primer.

3.11.2.2.8 Fabrication and Workmanship

Finished doors and frames shall be strong and rigid, neat in appearance, and free from defects, waves, scratches, cuts, dents, ridges, holes, warp, and buckle. Molded members shall be clean cut, straight, and true, with joints coped or mitered, well formed, and in true alignment. Dress exposed welded and soldered joints smooth. Design door frame sections for use with the wall construction indicated. Corner joints shall be well formed and in true alignment. Conceal fastenings where practicable. On wraparound frames for masonry partitions, provide a throat opening 3 mm larger than the actual masonry thickness. Design other frames in exposed masonry walls or partitions to allow sufficient space between the inside back of trim and masonry to receive caulking compound.

3.11.2.2.9 Installation of Doors & Frames

3.11.2.2.9.1 Frames

Set frames in accordance with SDI 105. Plumb, align, and brace securely until permanent anchors are set. Anchor bottoms of frames with expansion bolts or powder-actuated fasteners. Build in or secure wall anchors to adjoining construction. Backfill frames with mortar. When an additive is provided in the mortar, coat inside of frames with corrosion-inhibiting bituminous material. For frames in exterior walls, ensure that stops are filled with rigid insulation before grout is placed.

3.11.2.2.9.2 Grouted Frames

For frames to be installed in exterior walls and to be filled with mortar or grout, fill the stops with strips of rigid insulation to keep the grout out of the stops and to facilitate installation of stop-applied head and jamb seals.

3.11.2.2.9.3 Doors

Hang doors in accordance with clearances specified in SDI A250.8. After erection and glazing, clean and adjust hardware.

3.11.2.2.9.4 Fire and Smoke Doors and Frames

Install fire doors and frames, including hardware, in accordance with NFPA 80.

3.11.2.2.9.5 Protection and Cleaning

Protect doors and frames from damage. Repair damaged doors and frames prior to completion and acceptance of the project or replace with new, as directed. Wire brush rusted frames until rust is removed. Clean thoroughly. Apply an all-over coat of rust-inhibitive paint of the same type used for shop coat. Upon completion, clean exposed surfaces of doors and frames thoroughly. Remove mastic smears and other unsightly marks.

3.11.2.3.1 Accessories

3.10.2.5.1.1 Door Louvers

Fabricate from wood and of sizes indicated. Louvers shall be of the manufacturer's standard design and shall transmit a minimum of 35 percent free air. Louvers shall be the slat type.

3.11.2.3.1.1 Door Lite Openings

Provide glazed openings with the manufacturer's standard wood moldings except that moldings for doors to receive natural finish shall be of the same species and color as the face veneers. Moldings for flush doors shall be lip type.

3.11.2.3.1.2 Weather Stripping

Provide weather-stripping that is a standard cataloged product of a manufacturer regularly engaged in the manufacture of this specialized item. Weather stripping shall be looped neoprene or vinyl held in an extruded non-ferrous metal housing. Air leakage of weather stripped doors shall not exceed 0.003125 cubic meter per second of air per square meter of door area when tested in accordance with ASTM E 283.

3.11.2.3.2 Pre-fitting

At the Contractor's option, doors may be provided factory pre-fit. Doors shall be sized and machined at the factory by the door manufacturer in accordance with the standards under which they are produced. The work shall include sizing, beveled edges, mortising, and drilling for hardware and providing necessary beaded openings for glass and louvers. Provide the door manufacturer with the necessary hardware samples, and frame and hardware schedules as required to coordinate the work.

3.11.2.3.3 Finishes

Provide door finish colors as selected by the Contracting Officer from the color selection samples.

3.11.2.3.4 Water-Resistant Sealer

Provide a water-resistant sealer compatible with the specified finish as approved and as recommended by the door manufacturer.

3.11.2.3.5 Installation

Before installation, seal top and bottom edges of doors with the approved water-resistant sealer. Seal cuts made on the job immediately after cutting using approved water-resistant sealer. Fit, trim, and hang doors with a 2 mm minimum, 3 mm maximum clearance at sides and top, and a 5 mm minimum, 6 mm maximum clearance over thresholds. Provide 10 mm minimum, 11 mm maximum clearance at bottom where no threshold occurs. Bevel edges of doors at the rate of 3 mm in 50 mm. Door warp shall not exceed 6 mm when measured in accordance with WDMA I.S. 1-A.

3.11.2.4 Weather stripping

Install doors in strict accordance with the manufacturer's printed instructions and details. Provide weather stripping on exterior swing-type doors at sills, heads and jambs to provide weather tight installation. Apply weather stripping at sills to bottom rails of doors and hold in place with a brass or bronze plate. Apply weather stripping to door frames at jambs and head. Shape weather stripping at sills to suit the threshold.

3.11.2.5 Overhead Coiling Doors

Doors shall be fabricated from interlocking cold-rolled slats, designed to withstand building wind loading and be installed with wind locks. Slats shall be continuous for the width of the door. For doors not exceeding 4.27 m, slats shall be flat-profile design, with a depth of not less than 15.9 mm, a center to center width not more than 69.9 mm, and not less than a 1.21 mm uncoated thickness. Provide weather stripping for door-head and door jamb guides, and a bottom astragal. Weather stripping and astragal shall be natural rubber or neoprene rubber. Curtain jamb guides shall be fabricated from a combination of steel angles of sufficient size to retain curtain against the specified wind. Guides shall be fabricated from structural quality steel angles. Door shall have manufacturer’s standard five pin tumbler locks; keyed. Doors shall be counterbalanced by an adjustable, steel, helical torsion spring mounted around a steel shaft in a spring barrel and connected to the door curtain with the required barrel rings. Hoods shall be fabricated from steel sheets with minimum yield strength of 227.5 MPa.

Counterbalance-barrel components shall be as follows:

(a) Spring barrels shall be hot-formed structural-quality carbon steel, welded or seamless pipe. Pipe shall be of sufficient diameter and wall thickness to limit deflection to a maximum of 1/360 of the span.

(b) Counterbalance springs shall be oil-tempered helical steel springs designed with a safety factor of 4. Springs shall be sized to counterbalance the weight of the curtain at any point of its travel, and shall be capable of being adjusted to counterbalance not less than 125% of the normal curtain load. Spring adjustment shall be arranged in such a way that the curtain need not be raised or lowered to secure the adjustment.

(c) Counterbalance shafts shall be case-hardened steel of the proper size to hold the fixed ends of the spring and carry the torsion load of the spring.

(d) Barrel plugs shall be fabricated from cast steel machined to fit the ends of the barrel. Plugs shall secure the ends of the spring to the barrel and the shaft.

(e) Barrel rings shall be fabricated from malleable iron of the proper involute shape to coil the curtain in a uniformly increasing diameter.

(f) Shaft bearings shall be factory sealed ball bearings of the proper size for load and shaft diameters.

(g) Door operators shall consist of an endless steel hand chain, chain-pocket wheel and guard, and a geared reduction unit of at least a 3:1 ratio. Required pull for operation shall not exceed 16 kg. Chain hoists shall have a self-locking mechanism allowing the curtain to be stopped at any point in its upward/downward travel and to remain in that position until moved to the fully open or closed position. Hand chains shall be cadmium-plated alloy steel with a yield point of at least three times the required hand-chain pull. Pretreated zinc-coated steel sheets shall be given the manufacturer’s standard prime coat and an enamel finish coat applied to the exterior face after forming.

(h) After installation, doors, track, and operating equipment will be examined and tested for general

operation and weather against the specified wind pressure, and weather resistance. Doors that fail the required tests shall be adjusted and retested. Doors that have been adjusted and fail subsequent tests shall be removed and replaced with new doors at no additional cost.

3.11.3 Glass & Glazing

Window glazing shall be at most 20% of an exterior wall's surface area.

Glazing shall conform to ASTM C 1036 or ASTM C 1172 or equal.

3.11.3.1 Tempered Glass

Tempered glass shall be kind FT fully tempered flat type. Class 1 clear, condition A uncoated surface, Quality q3-glazing select, conforming to ASTM, DIN, BS or EN standards. Color shall be clear.

3.11.3.2 Laminated Glass

For non-force protection glazing, laminated glass shall be constructed out of two, 3mm glass panes bonded together with a minimum .75mm polyvinyl-butyral (PVB) interlayer.

3.11.3.3 Insulated Glass

All exterior glazing shall be insulated, constructed of two panes of laminated glass separated by hermetically sealed 12mm airspace.

3.11.3.4 Glazing Accessories

3.11.3.4.1 Sealant

Sealant shall be elastomeric conforming to ASTM, DIN, BS, or EN standards. Type S or M, Grade NS, Class 12.5, Use G, of type chemically compatible with setting blocks, preformed sealing tape and sealants used in manufacturing insulation glass. Color of sealant shall be as selected from manufacturer's full range of standard colors by Contracting Officer.

3.11.3.4.2 Glazing Gaskets

Glazing gaskets shall be extruded with continuous integral locking projection designed to engage into metal glass holding members to provide a watertight seal during dynamic loading, building movements and thermal movements. Glazing gaskets for a single glazed opening shall be continuous one-piece units with factory-fabricated injection-molded corners free of flashing and burrs. Glazing gaskets shall be in lengths or units recommended by manufacturer to ensure against pull-back at corners.

3.11.3.4.3 Fixed Glazing Gaskets

Fixed glazing gaskets shall be closed-cell (sponge) smooth extruded compression gaskets of cured elastomeric virgin neoprene compounds conforming to ASTM, DIN, BS, or EN standards.

3.11.3.4.4 Wedge Glazing Gaskets

Wedge glazing gaskets shall be high-quality extrusions of cured elastomeric virgin neoprene compounds, ozone resistant, conforming to ASTM, DIN, BS, or EN standards.

3.11.3.4.5 Putty and glazing Compound

Glazing compound shall conform to ASTM, DIN, BS, or EN standards for face-glazing metal sash. Putty

shall be linseed oil type conforming to DIN, BS, or EN standards for face-glazing primed wood sash. Putty and glazing compounds shall not be used with insulating glass or laminated glass.

3.11.3.4.6 Setting and Edge Blocking

Neoprene setting blocks shall be dense extruded type conforming to ASTM, DIN, BS, or EN standards. Silicone setting blocks shall be required when blocks are in contact with silicone sealant. Profiles, lengths and locations shall be as required and recommended in writing by glass manufacturer.

3.11.3.4.7 Preparation

Openings and framing systems scheduled to receive glass shall be examined for compliance with glass manufacturer's recommendations including size, squareness, offsets at corners, presence and function of weep system, face and edge clearance requirements and effective sealing between joints of glass-framing members. Detrimental materials shall be removed from glazing rabbet and glass surfaced and wiped dry with solvent. Glazing surfaces shall be dry and free of frost.

3.11.3.4.8 Installation

Glass and glazing work shall be performed in accordance with, glass manufacturer's instructions and warranty requirements. Glass shall be installed with factory labels intact and removed only when instructed. Edges and corners shall not be ground, nipped or cut after leaving factory. Springing, forcing or twisting of units during installation will not be permitted.

3.11.3.4.9 Cleaning

Upon completion of project, outside surfaces of glass shall be washed clean and the inside surfaces of glass shall be washed and polished in accordance with glass manufacturer's recommendations.

3.11.3.5 Protection

Glass work shall be protected immediately after installation. Glazed openings shall be identified with suitable warning tapes, cloth, or paper flags, attached with non-staining adhesives. Reflective glass shall be protected with a protective material to eliminate any contamination of the reflective coating. Protective material shall be placed far enough away from the coated glass to allow air to circulate to reduce heat buildup and moisture accumulation on the glass. Glass units which are broken, chipped, cracked, abraded, or otherwise damaged during construction activities shall be removed and replaced with new units.

3.12 FINISHES

All finishes, colors and materials in existing building and new buildings shall match. See Section 01335 for color submittals required. Provide color boards with all materials for COR approval prior to ordering materials.

3.12.3 Exterior Stucco Walls

The exterior of all buildings shall be stucco and/or plaster conforming to ASTM C926. A temperature of between 4 and 27 degrees C shall exist for a period of not less than 48 hours prior to application of plaster and for a period of at least 48 hours after plaster has set. Control joints shall be designed for expansion and contraction of plaster work due to thermal exposure. Control joints shall comprise of back to back casing beads. **Install heavy duty metal lath up to 8'-0" (2400mm) above grade, and standard metal lath after that.** Install new stucco in 2 coats. The first coat shall be a scratch coat approximately 1 cm thick. Allow 7 days to cure. The second coat shall be finish stucco, smooth finish, approximately 1 cm thick. Allow 7 days to cure before painting. Stucco showing over sanding, cracks,

blisters, pits, checks, discoloration or other defects is not acceptable. Defective plaster work shall be removed and replaced with new plaster at the expense of the Contractor. Patching of defective work will be permitted only when approved by the Contracting Officer. Patching shall match existing work in texture and color. All exterior color finish shall be integral with the stucco finish. No painted stucco shall be permitted due to minimize future maintenance. Color to be selected by the Contracting Officer from the color board provided by the Contractor. When rigid board exterior installation is used on exterior walls, installation board shall be kept minimum 200mm above grade, and stucco shall wrap around the under-side of the installation board at that elevation above grade.

3.12.4 Interior Walls

Interior walls shall be plaster applied in a similar manner as exterior stucco. Paint with 2 coats of semi-gloss off-white with less than .06% lead by weight color to be selected by the Contracting Officer from the color board provided by the Contractor.

3.12.5 Interior Ceilings

Ceilings of Barracks, and Headquarters, shall be plaster applied in 2 coats over wire mesh, which is to be stapled to the 20 mm x 60 mm wood battens. Paint ceiling with 2 coats of flat white, with less than .06% lead by weight. Gypsum board may be used in lieu of plaster but framing supports for Gypsum board shall be as follows: For ½" thick gypsum board structural fastener supports shall be not further apart than 400 mm. If gypsum board is thicker follow guidelines in ASTM C 840 for supports and fastener frequency.

3.12.5.1 Ceilings of Dining Facility shall be exposed concrete painted with 2 coats of flat white, with less than .06% lead by weight.

3.12.6 Exposed Exterior Steel trim, Frames, Doors and Pipe Railings

Paint with one coat oil-based primer, with 2 coats of oil-based alkyd gloss enamel, color to be selected by the Contracting Officer from the color board provided by the Contractor.

3.12.7 Exposed Wood Trim, Frames and Doors

Paint with one coat oil-based primer, 2 coats of gloss enamel, color to be selected by the Contracting Officer from the color board provided by the Contractor

3.12.8 Tile Work

Tile work shall not be performed unless the substrate and ambient temperature is at least 10 degrees C and rising. Temperature shall be maintained above 10 degrees C while the work is being performed and for at least 7 days after completion of work. Upon completion, tile surfaces shall be thoroughly cleaned in accordance with manufacturer's approved cleaning instructions. Acid shall not be used for cleaning glazed tile. Floor tile with resinous grout or with factory mixed grout shall be cleaned in accordance with instructions of the grout manufacturer. After the grout has set, tile wall surfaces shall be given a protective coat of a non-corrosive soap or other approved method of protection.

3.12.8.1 Floors in wet areas shall be non-slip ceramic or 300 mm x 300 mm terrazzo tile with thin set mortar. Joints shall be 2-3 mm. Waterproof gray grout shall be applied the full depth of the tile. Floors shall slope, minimum 1/50, to floor drains. Slope shall be obtained with sloping mortar bed of minimum 20 mm thickness. Provide continuous waterproofing membrane beneath sloping mortar bed, turn up wall 300 mm behind wall base. Membrane shall be fully sealed at joints and shall shed water into body of floor drain. Color of tile shall be selected by the Contracting Officer from samples provided by the Contractor.

3.12.8.2 Floors in administration areas, living quarters, corridors, and all rooms unless otherwise stated shall be 300 mm x 300 mm terrazzo tile with thin set mortar or sealed concrete with smooth finish. Joints shall be 2-3 mm. Waterproof gray grout shall be applied the full depth of the tile. Color of tile shall be selected by the Contracting Officer from samples provided by the Contractor.

3.12.8.3 Walls in wet areas shall be tiled with 150 mm x 150 mm glazed ceramic tile up to 2 meters above the floor to include interior of toilet stalls, showers and behind sinks. Joints shall be 2-3 mm. Waterproof gray grout shall be applied full depth of the tile. Grout shall cure for 72 hours and then be sealed with a commercial grout sealant in two coats. Color of tile shall be selected by the Contracting Officer from samples provided by the Contractor.

3.12.8.4 The ablution drain areas shall be recessed below the floor level 200 mm and lined with ceramic tile. Ceramic tile shall extend up the wall past the water spigots to a height of 2 m above finished floor. Seats shall be formed concrete with terrazzo tile finish to match the floor, 300 mm x 300 mm x 300 mm high finished dimensions. Color of ceramic tile shall be selected by the Contracting Officer from samples provided by the Contractor. Spacing between tiles shall be similar to terrazzo tile.

3.12.8.5 Kitchen in Dining Facility shall be covered with terrazzo flooring or quarry tile. Walls in kitchen shall be ceramic tile up to 2 m above finished floor. Floor in Dining area shall be terrazzo tile.

3.12.9 All other floors are to be completely cleaned and sealed epoxy. Color to be selected by the Contracting Officer from samples provided by the Contractor.

3.13 SPECIALTIES

3.13.1 Mirrors

0.6 m x 0.9 m, 6 mm plate glass shall be mounted above all lavatories. Mount bottom of mirrors 1.1m above finished floor.

3.13.2 Toilet Paper Holders

Toilet paper holders, stainless steel, shall be installed approximately 600 mm above floor.

3.13.3 Shower Curtain Rods & Shower Curtain

Shower curtain rods, stainless steel, heavy duty, 18 gauge shall be mounted between the screen walls of each shower stall. Mount rod at 2.0 m above finished floor. Provide a shower curtain with support rings for each shower stall.

3.13.4 Grab-Bars

Stainless steel grab-bars, heavy duty, 18 gauge, two each 900 mm and 1050 mm long, 40 mm diameter shall be mounted behind and beside all eastern toilets, and bathtubs as they occur.

3.13.5 Paper Towel Dispensers

Paper towel dispensers, 0.683 mm Type 304 stainless steel, surface mounted. Furnish tumbler key lock locking mechanism.

3.13.6 Light Duty Metal Shelf

Provide a 600 mm long, light duty stainless steel shelf and brackets over each lavatory.

3.13.7 Robe Hooks

Robe hooks on all toilet and shower stalls required.

3.14 COLD STORAGE ROOMS

3.14.1 Contractor shall provide the Contracting Officer shop drawings for approval of appropriately sized walk-in refrigerators and freezer to include proposed manufacturer, construction details, manufacturer's instructions, evacuation and charging procedures, operation and maintenance date, start-up and initial operational tests.

3.14.2 Walk-in coolers shall be panel type modular construction. Doors shall be swing-type. Refrigeration equipment shall be remote located on the exterior of the building. Provide a temperature/ alarm system. Provide interior lighting with exterior switch. Floors of cool rooms shall be insulated panelized construction from the manufacturer of the cool rooms. The concrete floor will not be depressed.

3.14.3 Refrigeration piping shall be annealed or hard drawn seamless copper tubing in conformance with ASTM B280. Refrigeration systems shall be remote type.

3.14.4 Electrical characteristics shall match local power 380v/3ph/50Hz and 220v/1ph/50Hz.

Preservation and packing shall be commercial grade.

Provide a recording thermometer.

Provide temperature alarm with connector to remote temperature alarm.

Provide outdoor condensing unit cover and security fence or wall to protect outside units. Provide condensing unit outdoor controls for operation down to –18 degrees C ambient temperature.

Refrigeration Equipment

Refrigeration equipment shall be designed for remote installation. Design units for 16 to 18 hour operation at the indicated interior temperature in –18 degree C ambient temperature. Capacities, air delivery, and dimensions shall be as indicated. Remote condensing units shall be factory fabricated and rated in accordance with UL303 and ARI 365. Provide with motor, air cooled condenser, receiver, compressors, mounted on a common base. Compressors shall be hermetic type. Evaporators shall be factory fabricated and rated in accordance with UL 412 and ARI 420. Forced convection, unit cooler type, made to suspend from the ceiling panels, with forced air discharged parallel to the ceiling. Provide with air circulating motor, multi-fin tube type coil and grille assembled within a protective housing. Air circulation motors shall be lifetime sealed, and the entire unit-cooler assembly shall be accessible for cleaning. Provide a drip pan and drain connection. When the cold storage room is used for freezing, provide an automatic electric heat defrosting system. Provide a timer type defrost controllers.

Provide condensate drain lines and drains below freezer floors with electric heating cable, thermostatically controlled to maintain 10 degrees C at zero flow rate. Cable shall be sized in accordance with manufacturer's recommendations.

3.14.11 Submit a copy of installation instructions to the Contracting Officer covering both assembly and installation of the refrigeration equipment prior to start of

3.14.12 Work Start up and initially operate the systems upon completion of the installation

of the equipment and refrigerant piping. Adjust the safety and automatic controls to place them in operating sequence. Record manufacturer's recommended readings hourly. Operational test shall cover a period of not less than 24 hours. Upon completion of Operational test the systems shall be performance tested. Test duration shall not be less than 8 hours. Test shall include the following information to be in the report with conclusions regarding the adequacy of the systems:

Time, dates and duration of tests:

- Inside dry-bulb and wet-bulb temperatures maintained in each room during the tests employing recording instruments calibrated before the tests.

- Outside dry-bulb and wet-bulb temperatures obtained from recording instruments calibrated and checked hourly with a sling psychrometer.

- Evaporator and condenser entering and leaving temperatures taken hourly with the compressors in operation.

- The make, model, and capacity of each evaporator and condensing unit.

- Voltmeter and ammeter readings for condensing units and evaporators.

3.14.13 Provide chart showing the layout of the refrigeration systems, including piping, valves, wiring, and control mechanisms. Submit printed instructions covering the maintenance and operation of refrigeration equipment. Tag shutoff valves in accordance with the instructions. Provide any special tools necessary for repair and maintenance of the systems.

3.14.14 Remove any packing material. Wash and clean floors, walls, ceilings and equipment inside of cool rooms. Wash and clean exposed surfaces on outside.

3.14.15 Upon completion of the work and at a time designated by the Contracting Officer, provide instruction to designated personnel in the operation and maintenance of each refrigeration system. The period of instruction shall not be less than one 8-hour day.

4.0 STRUCTURAL

4.1 GENERAL

The project consists of various structures. The new buildings shall be provided with a reinforced concrete slab foundation that is properly placed on suitable compacted ground area and shall be in accordance with the recommendations from the geotechnical investigation. The reinforced concrete foundation shall be designed by the Contractor. Building foundations shall be founded a minimum of 800 mm below grade.

4.2 DESIGN

Design shall be performed and design documents signed by a registered professional architect and/or engineer. Calculations shall be in SI (metric) units of measurements. All components of the building shall be designed and constructed to support safely all loads without exceeding the allowable stress for the materials of construction in the structural members and connections. All building exterior walls shall be constructed with reinforced CMU, shotcrete 3-D panels, or reinforced concrete unless otherwise stated in sections 1010 or 1015.

4.3 STANDARDS

The Contractor should use the following American standards to provide sound structural design if local standards are not available, relevant, or applicable. The Contractor shall follow American Concrete Institute Standards for design and installation of all concrete structures.

Concrete strength	280.0 kg./sq.cm (f'c) (4000psi) a minimum specified compressive @ 28 days (ASTM-. C 39 and ACI 318) with a maximum water-cement ratio of 0.45.
Plaster strength	140.0 kg./sq.cm (f'c) (2000psi) conforming to ASTM C 926.
Steel Reinforcement	4218.0 kg./sq.cm(Fy= 60.0 ksi),yield strength.
Welded Wire Fabric	ASTM A185
Anchor Bolts	ASTM A307 using A36 steel.
Concrete Masonry Units	ASTM C90, Type I (normal wt, moisture Cntrl).
Mortar	ASTM C270, Type S (Ultimate compressive strength of 130.0 kg/sq. cm.)
Proportion	1 part cement, 0-1/2 part lime and 4-1/2 parts aggregate
Grout	ASTM C476 (Slump between 200 mm to 250 and Compressive Strength 14 MPa (2000 psi) at 28 days.
Joint Reinforcement	Standard 9 gauge minimum, Ladder Type
Structural Steel	ASTM A36: 2530.0 kg./sq.cm (Fy = 36,000psi)
Welding	AWS (American Welding Society) D1.1-2002.

4.4 DEAD AND LIVE LOADS

Dead loads consist of the weight of all materials of construction incorporated in the buildings. Live loads used for design shall be in accordance with the Structural Load Data, UFC-3-310-01, and edition as referenced herein.

4.5 WIND LOADS

Wind loads shall be calculated using a "3-second gust" wind speed of 135 km/hr.

4.6 SEISMIC

The building and all parts thereof shall be designed for the seismic requirements as defined by the International Building Code referenced herein. Spectral ordinates shall be S_s = 1.28g and S_1 = 0.51g.

4.7 STRUCTURAL CONCRETE

Concrete structural elements shall be designed and constructed in accordance with the provisions of the American Concrete Institute, Building Code Requirements for Structural Concrete, ACI 318, latest edition. A minimum cylinder 28 day compressive strength of 28 MPa (4000 psi) shall be used for design and construction of all concrete, except that 24 MPa (3500 psi) shall be used for Shotcrete applications. Reinforcing steel shall be deformed bars conforming to American Society for Testing and Materials (ASTM) publication ASTM a 615, Deformed and Plain Billet-Steel Bars for Concrete Reinforcement. Concrete at or below grade shall have maximum water-cement ration of 0.45. No concrete shall be placed when the ambient air temperature exceeds 32 degrees C (90 degrees F) unless an appropriate chemical retardant is used. In all cases when concrete is placed at 32 degrees C (90 degrees F) or hotter it shall be covered and kept continuously wet for a minimum of 48 hours. Concrete members at or below grade shall have a minimum concrete cover over reinforcement of 75 mm (3 inch).

4.8 MASONRY

Masonry shall be designed and constructed in accordance with the provisions of Building Code Requirements for Masonry Structures, ACI 530/ASCE 5/TMS 402, latest editions. Mortar shall be Type

S and conform to ASTM C 270, latest edition. Masonry shall not be used below grade, unless for fully grouted and reinforced foundation stem walls. **All cells of CMU walls shall be fully grouted and reinforced.**

4.9 STRUCTURAL STEEL

Structural steel shall be designed and constructed in accordance with the provisions of American Institute of Steel Construction (AISC), Specifications for Structural Steel Buildings, 9th Edition. Design of cold-formed steel structural members shall be in accordance with the provisions of American Iron and Steel Institute (AISI), Specifications for Design of Cold-Formed Steel Structural Members.

4.10.1 Steel Roof Joists

Steel roof joists shall be placed according to the roof design and roof manufacturer specifications. Steel purlins shall be installed perpendicular to the steel beams. Use continuous metal roof sheets from ridge to eave to avoid constructing roof seams. In lieu of the continuous metal roof sheets, the Contractor can submit a plan for roofing seams; however, the plan must show a detail of how leaks will be avoided, and the Contracting Officer before application must approve the plan. Steel “hat channels” shall be installed on the bottom side of steel beams for the installation of gypsum board with screws. Provide all necessary metal framing for roof fascia and soffits. See structural paragraph for structural characteristics of steel joists.

.

4.10 METAL DECK

Deck units shall conform to SDI Publication Number 29. Panels of maximum possible lengths shall be used to minimize end laps. Deck units shall be fabricated in lengths to span three or more supports with flush, telescoped or nested 50 mm (2 inch) laps at ends, and interlocking, or nested side laps. Metal deck units shall be fabricated of steel thickness required by the design and shall be galvanized.

4.11 OPEN WEB STEEL JOIST

Open web steel joists shall conform to SJI Specifications and Tables. Joists shall be designed to support the loads given in the standard load tables of SJI Specifications and Tables.

4.12 FOUNDATIONS

Foundations shall be in accordance with the Geotechnical requirements of this RFP.

4.13 EARTHWORK AND FOUNDATION PREPARATION

4.13.1 Capillary Water barrier

ASTM C 33 fine aggregate grading with a maximum of 3 percent by weight passing ASTM D 1140, 75 micrometers, No. 200 sieve, or 37.5mm and no more than 2 percent by weight passing the 4.75mm No. 4 size sieve and conforming to the soil quality requirements specified in the paragraph entitled “Satisfactory Materials.”

4.13.2 Satisfactory Materials

Any materials classified by ASTM D 2487 as GW, GW-GM, GW-GC, SW, SW-SM, SW-SC, SC, or CL-ML and free of debris, roots, wood, scrap material, vegetation, refuse, soft unsound particles, or objectionable materials. Unless specified otherwise, the maximum particle diameter shall be one-half the lift thickness at the intended location.

4.13.3 Unsatisfactory Materials

Any materials which do not comply with the requirements set forth in the Satisfactory Materials paragraph. Unsatisfactory materials also include man-made fills, trash, refuse, or backfills from previous construction. Unsatisfactory material also includes material classified as satisfactory which contains root and other organic matter, frozen material, and stones larger than 75mm. The Contracting Officer shall be notified of any unsatisfactory materials.

4.13.4 Clearing and Grubbing

Unless indicated otherwise, remove tress, stumps, logs, shrubs, brush and vegetation, and other items that would interfere with construction operations within lines 1.5 meters outside of the building and structure line. Remove stumps entirely. Grub out matted roots and roots over 50mm in diameter to at least 460mm below existing surface.

4.13.5 Stripping

Strip suitable soil from the site where excavation or grading is indicated and stockpile separately from other excavated material. Material unsuitable for use as topsoil shall be stockpiled and used for backfilling. Locate topsoil so that the material can be used readily for the finished grading. Where sufficient existing topsoil conforming to the material requirements is not available on site, provide borrow materials suitable for use as topsoil. Protect topsoil and keep in segregated piles until needed.

4.13.6 Excavation and Compaction of Fill

Excavate to contours, elevation, and dimensions indicated. Reuse excavated materials that meet the specified requirements for the material type required at the intended location. Keep excavations free from water. Excavate soil disturbed or weakened by Contractor's operations, soils softened or made unsuitable for subsequent construction due to exposure to weather. Excavations below indicated depths will not be permitted except to remove unsatisfactory material. Unsatisfactory material encountered below the grades shown shall be removed as directed. Refill with satisfactory material and compact to at least 95 percent of the maximum dry density, as determined by the Modified Proctor laboratory procedure. ASTM D 1557 shall be used for producing the Modified Proctor moisture-density curve, unless the soil to be compacted includes more than 30% retained on the 19 mm (3/4") sieve. In this case, the Contractor must replace the ASTM D 1557 laboratory compaction procedure with AASHTO T 180, Method D, corrected with AASHTO T 224.

During compaction, the moisture content of the soil shall be within 1.5 percent of the optimum moisture content, as determined by the Modified Proctor laboratory procedure. The thickness of compacted lifts shall not exceed 15 cm and the dry density of each compacted lift shall be tested by either sand cone (ASTM D 1556) or nuclear gage (ASTM D 2292). If the nuclear gage is used, it must first be compared to sand cone tests for each soil type to verify the accuracy of the nuclear gage measurements for moisture content, wet density, and dry density. Furthermore, every tenth nuclear gage test must be accompanied by a sand cone test and these verification data must be summarized and submitted to the Contracting Officer. Density tests shall be performed at a frequency of not less than one test for each 200 square meters and not less than two tests per compacted lift.

4.13.7 Structures with Spread Footings

Ensure that footing subgrades have been inspected and approved by the Contracting Officer prior to concrete placement. Fill over excavations with concrete during foundation placement.

5.0 GEOTECHNICAL

5.1 SOIL INVESTIGATION

Existing geotechnical information is not available at the project site. Any site-specific geotechnical data required to develop foundations, materials, earthwork, and other geotechnical related design and construction activities for this project shall be the Contractor's responsibility. The Contractor shall develop all pertinent geotechnical design and construction parameters by appropriate field and laboratory investigations and analyses. The Contractor shall produce a detailed geotechnical report containing field exploration and testing results, laboratory testing results (particle sizes and distribution, liquid and plastic limit test, and moisture and density test, etc.). Information in the report shall include, but not limited to: existing geotechnical (e.g. surface and subsurface) conditions, location of subsurface exploration logs on site plan, exploration point, allowable soil bearing capacity and foundations recommendations, bearing capacity, pavement design criteria (e.g. CBR values, K values), ground-water levels, and construction materials (e.g. concrete cement, asphalt, and aggregates). For standard penetration test (SPT), the Contractor shall use ASTM D1586. All geotechnical laboratory and field work shall be based on standards set forth in the ASTM. **Contractor shall not use any DIN**.

For allowable bearing pressures, the contractor shall compare the values obtained from field investigation and laboratory testing with values set forth in the UFC 3-220-03FA, Table 6-1 for the soil type encountered. The contractor shall use the lower of the two values for the soil type for all foundations and pavement designs.

The contractor shall submit a geotechnical investigation plan prior to commencing any field investigation to the USACE-AED Engineering Brach through the COR for review and approval. Once the plan is reviewed and approved, the Contractor can start the field investigation. The Geotechnical report shall be submitted with all the design review submittals as specified in the 01335. **No design review submittal shall be considered complete without an approved geotechnical report**.

5.2 GEOTECHNICAL QUALIFICATIONS

A geotechnical engineer or geotechnical firm responsible to the Contractor shall develop all geotechnical engineering design parameters. The geotechnical engineer or geotechnical firm shall be qualified by: education in geotechnical engineering; professional registration; and a minimum of ten (10) years of experience in geotechnical engineering design. The geotechnical firm conducting either the field investigation or laboratory work shall be certified by the Chief, Quality Assurance Branch USACE-AED. Certification document shall be submitted as part of the Geotechnical Report.

6.0 MECHANICAL

6.1 GENERAL

The work covered by this section consists of design, supply, fabrication and installation of new building heating, ventilation and air-conditioning (HVAC) systems. It also includes the delivery to site, erection, setting to work, adjusting, testing, balancing and handing over in perfect operating and running condition all of the HVAC equipment including all necessary associated mechanical works.

6.2 SPECIALIST SUB-CONTRACTORS QUALIFICATIONS

The heating, ventilation, and air-conditioning works shall be executed by an air-conditioning specialist sub-contractor experienced in the design and construction HVAC equipment to include conventional compression systems, heat pump units, space heaters and knowledge in fabricating specialized units consisting of supplemental electric resistance heaters in satisfying the specified indoor design conditions. HVAC equipment will normally consist of split pack heat pump units with supplemental electric heating elements, ducted packaged heat pump units with supplemental duct mounted electric resistance heaters, industrial quality unit heaters, air ventilation systems and specialized industrial

ventilation systems. The HVAC heating and cooling load calculations shall be prepared using recognized HVAC load analysis programs such as Trane “Trace” or Carrier “HAP”. The heating and cooling load calculations shall take into account the site elevation and ambient design temperatures when determining required HVAC equipment capacities and airflows. The HVAC specialist shall submit the complete HVAC analysis at the 65% design submittal. The HVAC analysis shall clearly state the type of systems to be used and how the system will satisfy the specified indoor design conditions. Provide related psychrometric charts showing the air wet bulb and dry bulb temperatures at each section of the heat/cool unit during both design heating and cooling operation.
Provide complete, edited specifications using the UFGS specs for selected HVAC system. The edited specifications shall be submitted along with the 65% design submittal. The specifications shall be coordinated with the manufacturer of the equipment.

6.3 CODES, STANDARDS AND REGULATIONS

The equipment, materials and works covered under the heating, ventilation and air-conditioning services shall conform to the referenced standards, codes and regulations where applicable except where otherwise mentioned under each particular clause.

6.4 DESIGN CONDITIONS

Outside Design Conditions **(Contractor shall verify the ambient conditions with available and reliable local weather data)**.

Herat area:
Latitude – (approx.) 34.22 deg. North
Longitude – (approx.) 62.22 deg. East
Elevation – (approx.) 964 M (3163 ft.)
Summer – 38 deg C (100 deg F) Dry Bulb (DB) [& 20 deg C (68 deg F) Wet Bulb (WB)
Winter – (-6 deg C/21 deg F)
Daily Range – 17 F)

6.4.1 Indoor Design Condition

Enlisted Barracks	No cooling	Heating 20 C (68 F)
Senior Barracks	Cooling 25.6 C (78 F)	Heating 20 C (68 F)
Administrative buildings/Offices	Cooling 25.6 C (78 F)	Heating 20 C (68 F)
DFAC (Dining Area)	Cooling 25.6 C (78 F)	Heating 20 C (68 F)
Toilet/Shower/Laundry bldgs	No cooling	Heating 20 C (68 F)
Maintenance facilities	No cooling	Heating 12.7 C (55 F)
Communication building	Cooling 25.6 C (78 F)	Heating 20 C (68 F)
Storage buildings	No cooling	No heating
Arms Storage	No cooling	Heating 12.7 C (55 F)
Gymnasiums	Cooling 25.6 C (78 F)	Heating 20 C (68 F)
Guard towers/sheds	Cooling 25.6 C (78 F)	Heating 20 C (68 F)

Warehouses do not normally require any temperature control unless materials requiring special temperature control are stored. In general, warehouses, laundry, and storage buildings and vehicle maintenance bays shall be provided with ventilation to maintain the indoor conditions to 10 F above the summer ambient DB temperature. If the warehouse is to be occupied (people working), provide infrared heaters to spot heat the space where the people normally work. Vehicle maintenance bays shall be provided with infrared heaters or unit heaters.

6.4.2 Noise Level

Noise levels inside occupied spaces generated by HVAC systems shall not exceed **NC 35**

6.4.3 Internal Loads

a. Occupancy: Use ASHRAE standards to calculate sensible and latent heat from people. In general, light/moderate office work is 73watts sensible and 45watts latent.
b. Lighting: 21.5 W/m2 (2 W/Ft2) maximum (however lighting levels shall meet minimum requirements and shall be accounted for in the heating and cooling loads based on the actual lighting design).
c. Outdoor Air: Outdoor ventilation air shall be provided per ASHRAE Standard 62.1 with the exception of guard towers, guard shacks, and storage facilities. In general this requires 2.5 L/s/Person (5 CFM/Person) and 0.3 L/s per square meter of floor space (0.06 CFM/sqft); outdoor air requirements can be satisfied by opening windows and doors for facilities without a ducted system.
Latrine/Bathroom Exhaust– 85 CMH (50 CFM) per toilet, urinal, and shower head.
d. Building Pressurization: 1.3 mm W.G. (0.05 in W.G.); Maintain negative pressure in latrine areas. This is only applicable for buildings provided with central ducted forced air systems

6.5 NEW AIR CONDITIONING & HEATING EQUIPMENT

Environmental control of the facilities shall be achieved by HVAC equipment as listed below and approved by the U.S. Government. Unless otherwise noted, the Contractor may choose any combination of equipment to achieve the inside design conditions specified for the floor plans that is the most Life Cycle Cost Effective to the government. Contractor shall size and select equipment based on equipment manufacturer's performance data at the project site elevation and ensures the equipment's performance meets the design heating and cooling sizing requirements.

Facility Type	Cooling	Heating	Type of HVAC System	Remarks
Enlisted Barracks	None	20C 68 F	Unit Heaters	Provide ceiling fans
Officers Barracks	25.6C 78 F	20C 68 F	Split pack heat pump units	
Battalion HQs	25.6C 78 F	20C 68 F	Ducted packaged heat pump	
Toilet/Shower/ Laundry	None	20C 68 F	Unit Heaters	Provide adequate ventilation
Storage	None	7.2 C 45 F	Unit heaters	Provide adequate ventilation
DFAC (Dining Area)	25.6C 78 F	20C 68 F	Ducted packaged heat pump	
Comm/Maint	25.6C 78 F	20C 68 F	Ducted packaged heat pump	
Gymnasium	25.6C 78 F	20C 68 F	Ducted packaged heat pump	
POL Storage	None	7.2 C 45 F	Unit heater	Provide adequate ventilation
Arms Storage	None	7.2 C	Unit heater	Provide

		45 F		adequate ventilation
Vehicle Maintenance	None	12.7 C 55 F	Unit heaters or infrared heaters	Provide adequate ventilation
Enclosed Power Plant (Office space to be provided with split pack heat pump unit)	None	12.8C 55 F	Unit heaters	Provide adequate ventilation.
Guard House	25.6C 78 F	20C 68 F	Split pack heat pump	
Guard Tower	25.6C 78 F	20C 68 F	Split pack heat pump	

6.5.2 Unitary Ducted Heat Pump Units

Ducted, packaged heat pump units shall be provided for all large occupied buildings such as DFACs, Administrative, MWR facilities and operational facilities. Ducted forced air systems are required to satisfy the indoor air quality as specified in ASHRAE 62.1 and to maintain positive pressure of 1.3 mm W.G. in the buildings. Ducted heat pump units shall be unitary in design and factory manufactured ready for installation. Heat pump units shall provide cooling during summer and heating during winter. The unit shall consist of DX coil, blower, supplemental electric heater elements, washable filter, and condenser unit containing the compressor, condenser coil, fans and all internal controls/fittings complete all mounted in a weatherized housing finished for exposed installation. The unit shall be suitable for exterior installation and be mounted on steel supports or on a concrete pad. Copper refrigerant suction and liquid piping shall be sized, insulated and installed in accordance to unit manufacture recommendations. Unit temperature control shall include wall mounted adjustable thermostat, blower on-off-auto switch and heating-cooling change over control. Heat pump units shall be limited to 10 tons each. Facilities requiring more than 10 tons of cooling shall be provided with multiple heat pump units.

6.5.3 Unitary (ductless split) Heat Pump Units

Unitary ductless split pack heat pump units shall be provided for small and isolated rooms, such as the guard tower, guard shed and remote small buildings. Ductless split units shall be unitary in design and factory manufactured ready for installation. Heat pump units shall provide cooling during summer and heating during winter. Evaporator unit shall consist of a DX coil, blower, supplemental electric heater elements and washable filter all mounted in a housing finished for exposed installation. Cooling coil condensate piping shall route to and discharge to the sanitary sewer system. The condensing unit will contain compressor, condenser coil, and all internal controls/fittings complete to include a weatherized housing. Outdoor condensing unit shall be mounted on steel supports or on a concrete pad. Copper refrigerant suction and liquid piping shall be sized, insulated and installed in accordance to unit manufacture recommendations. Unit temperature control shall include wall mounted adjustable thermostat, blower on-off-auto switch and heating-cooling change over control.

6.6 DUCTWORK

Air shall be distributed from central Air Handling Units (AHUs) to achieve proper airflow throughout the facility by means of air distribution ductwork. Air distribution system shall be comprised of supply and return ductwork, fittings, grilles, registers, and/or diffusers. Ductwork shall be constructed of galvanized steel or aluminum sheets and installed as per SMACNA “HVAC Duct Construction Standards (Metal and Flexible).” Flexible non-metallic duct may be used for final unit/diffuser connection in ceiling plenums. These flexible duct run-outs shall be limited to 3 meters in length.

6.6.1 Duct Insulation

Duct insulation shall be provided for all supply ductwork that is not located in the conditioned space and for return ductwork not located within the conditioned space. All ductwork exterior to the building shall be insulated with a minimum RSI=0.88 (R5).
In general interior ducts shall be exposed to the rooms and will not be insulated. The heat lost or gained from the un-insulated ducts shall be considered as part of the heating or cooling of the conditioned space.

6.6.2 Diffusers, Registers & Grilles

Diffusers, registers and grilles shall be factory fabricated of steel or aluminum and distribute the specified air quantity evenly over the space intended. The devices shall be round, half round, square, rectangular, linear, or with perforated face as determined by the design. Units will be mounted in ceilings, high sidewalls, or directly to ductwork and shall be sized for the airflow to be delivered with a maximum NC rating of 35. Pressure loss through the diffuser shall be considered in sizing the duct system and the system static pressure calculations.

6.6.3 Branch Take-offs

Air extractors or 45° entry corners shall be provided at all branch duct take-offs. Manual volume control dampers shall be included at the branch duct take-offs and where required to facilitate air balancing and shall be shown on the design drawings.

6.6.4 Wall Penetrations

Building wall penetrations shall be carefully made so as not to deteriorate the structural integrity of the wall system. The Contractor shall consult with the building manufacturer, if possible, to determine the best way to penetrate the wall. If the building manufacturer is not available, a structural engineer shall be consulted. In either case, the recommendations of the engineer shall be strictly adhered to.

6.6.5 Air Filtration

All supply air shall be filtered using manufacturer’s standard washable filters mounted inside the unit. In addition, all outdoor air intakes shall be equipped with 50 mm (2 inch) thick washable filters.

6.6.6 Control Wiring and Protection Devices

Control wiring and protection of the air conditioning units being offered must be the manufacturer’s standard, pre-wired, installed in the unit at the factory or as recommended. Thermostats shall be located near the unit return, and shall include lockable housing that allows viewing of settings without permitting access. For units serving more than one area, the thermostat shall be located near the return of the space with the highest heat generation.

6.7 COLD STORAGE ROOMS & CONEX BUILDINGS

6.7.1 Shop Drawings

Contractor shall provide the Contracting Officer shop drawings for approval of appropriately sized walk-in refrigerator and freezer to include proposed manufacturer, construction details, manufacturer’s instructions, evacuation and charging procedures, operation and maintenance date, start-up and initial operational tests.

6.7.2 Modular Construction

Walk-in coolers shall be panel type modular construction. Doors shall be swing type. Refrigeration equipment shall be remote located on the exterior of the building. Provide a temperature/ alarm system. Provide interior lighting with exterior switch. Floors of cool rooms shall be insulated panelized construction from the manufacturer of the cool rooms. The concrete floor will not be depressed.

Walk-in freezer shall be able to maintain the product temperature between -10 to 0 deg F.

Walls, ceiling and flooring of the coolers and freezer shall not contain any wood or wooden material. Walls and ceiling shall be made of sandwiched panels filled with polystyrene or urethane insulation material. Panels shall be aluminum or stainless steel.

Ramps shall be provided at the door of the cooler and freezers.

6.7.3 Piping

Refrigeration piping shall be annealed or hard drawn seamless copper tubing in conformance with ASTM B280. Refrigeration systems shall be remote type.

6.7.4 Electrical

Electrical characteristics shall match local power 380v/3ph/50Hz and 220v/1ph/50Hz.

6.7.5 Packing Material

Preservation and packing shall be commercial grade.

6.7.6 Temperature Record & Control

Provide a recording thermometer. Provide temperature alarm with connector to remote temperature alarm.

6.7.8 Outdoor Condensing Unit

Provide outdoor condensing unit cover and security fence or wall to protect outside units. Provide condensing unit outdoor controls for operation down to –18 degrees C ambient temperature.

6.7.9 Refrigeration Equipment

Refrigeration equipment shall be designed for remote installation. Design units for 16 to 18 hour operation at the indicated interior temperature in –18 degree C ambient temperature. Capacities, air delivery, and dimensions shall be as indicated. Remote condensing units shall be factory fabricated and rated in accordance with UL303 and ARI 365. Provide with motor, air cooled condenser, receiver, compressors, mounted on a common base. Compressors shall be hermetic type. Evaporators shall be factory fabricated and rated in accordance with UL 412 and ARI 420. Forced convection, unit cooler type, made to suspend from the ceiling panels, with forced air discharged parallel to the ceiling. Provide with air circulating motor, multi-fin tube type coil and grille assembled within a protective housing. Air circulation motors shall be lifetime sealed, and the entire unit-cooler assembly shall be accessible for cleaning. Provide a drip pan and drain connection. When the cold storage room is used for freezing, provide an automatic electric heat defrosting system. Provide a timer type defrost controllers.

6.7.9 Drain Lines

Provide condensate drain lines and drains below freezer floors with electric heating cable,

thermostatically controlled to maintain 10 degrees C at zero flow rate. Cable shall be sized in accordance with manufacturer's recommendations.

6.7.11 Installation Instructions

Submit a copy of installation instructions to the Contracting Officer covering both assembly and installation of the refrigeration equipment prior to start of work

6.7.12 Testing

Start up and initially operate the systems upon completion of the installation of the equipment and refrigerant piping. Adjust the safety and automatic controls to place them in operating sequence. Record manufacturer's recommended readings hourly. Operational test shall cover a period of not less than 24 hours. Upon completion of Operational test the systems shall be performance tested. Test duration shall not be less than 8 hours. Test shall include the following information to be in the report with conclusions regarding the adequacy of the systems:

Time, dates and duration of tests:

- Inside dry-bulb and wet-bulb temperatures maintained in each room during the tests employing recording instruments calibrated before the tests.
- Outside dry-bulb and wet-bulb temperatures obtained from recording instruments calibrated and checked hourly with a sling psychrometer.
- Evaporator and condenser entering and leaving temperatures taken hourly with the compressors in operation.
- The make, model, and capacity of each evaporator and condensing unit.
- Voltmeter and ammeter readings for condensing units and evaporators.

6.7.13 Operations & Maintenance

Provide chart showing the layout of the refrigeration systems, including piping, valves, wiring, and control mechanisms. Submit printed instructions covering the maintenance and operation of refrigeration equipment. Tag shutoff valves in accordance with the instructions. Provide any special tools necessary for repair and maintenance of the systems.

Upon completion of the work and at a time designated by the Contracting Officer, provide instruction to designated personnel in the operation and maintenance of each refrigeration system. The period of instruction shall not be less than one 8-hour day.

6.7.14 Clean-up

Remove any packing material. Wash and clean floors, walls, ceilings and equipment inside of cool rooms. Wash and clean exposed surfaces on outside.

6.8 VENTILATION AND EXHAUST SYSTEMS

All fans shall be used for building ventilation and pressurization with capacities to be selected for minimum noise level generated. Unit mounted fans either used for supply or exhaust shall be centrifugal forward curved, backward inclined, or airfoil fans with non-overloading characteristics of high efficiency and quiet running design. The fans shall be of the heavy-duty type with durable construction and proved performance in a desert environment. Each exhaust fan shall be provided with motorized or gravity

dampers which close automatically when the fan is not running. Also, each fan shall be complete with vibration isolator, external lubricators, and all accessories and sound attenuators as necessary.

Consideration shall be given to the use of gravity type or turbine ventilators for warehouse and storage buildings. Gravity type and turbine ventilators require no electrical power to operate. Application of gravity or turbine ventilators shall be incorporated as much as practically possible.

Supply intake openings shall be provided with motorized dampers which are interlocked with the exhaust fan. The dampers open or close when the exhaust fan is on or off respectively.
Maintenance shops and similar spaces that use solvents and oils shall be provided with mechanical exhaust air systems. Exhaust fans shall be centrifugal wall mounted type. Intake openings shall be provided with motorized dampers which are interlocked with the exhaust fans. The systems shall consist of centrifugal fan, ductwork, exhaust grills, and interlock controls. Comply with Industrial Ventilation UFC 3-410-04N.
Supply intake openings for gravity type or turbine ventilators shall be a louvered opening. Intake openings shall be adequately sized to induce convection flow through the gravity or turbine ventilators.
Toilet and Wash Area: Minimum exhaust ventilation shall be the largest of 35 m3/h / m2 floor or 85 m3/h / toilet (WC). At extreme cold in winter these values can be reduced for short periods to 10 m3/h / m2 or 40 m3/h / toilet (WC) to conserve heat. Provide two speed fans.

6.8.1 Kitchen Hood Exhaust and Make-up Air

As required and as per Kitchen design specialist and equipment supplier requirements. Exhaust flow rate shall be a minimum of 400 cfm per linear foot of hood length. The air velocity in the exhaust duct shall be limited to 1500 feet per minute. The designer shall take special note that multiple large propane stoves will be installed in the kitchen. The steam generated by the local style of cooking with large pots is immense in comparison to western standards, and the additional need for ventilation must be accounted for in the design. Also, the cooks are accustomed to standing on top of the stoves in order to stir the large cauldrons of food. This common cooking practice should be taken into consideration when designing the exhaust hood. The height of the hood above the stovetop should be such that a man of average stature could stand upright without risk of hitting his head on the hood. Design per NFPA 92A, 96, 204, and 211. Make up air intake shall be integral with the hood system or be located as close to the exhaust intake to prevent cold drafts. Non-integral makeup air shall be tempered within ten degrees of ambient air temperature.

To reduce sand and dirt migration, outside air intakes shall be located as high as possible within architectural constraints. The intakes shall be sized so that free air velocities are below 2.5 m/s (500 fpm). For inhabited buildings locate all air intakes at least 1.5 (center-line of intake) meters above the ground. Each air intake shall be provided with a motorized damper which is interlocked with the exhaust fan.

6.8.2 Battery Room Exhaust

Battery room exhaust shall comply with Part 6 of UFC 4-229-01N dated 16 January 2004. The UFC is available at http://www.wbdg.org/. The exhaust fan for the lead acid shop shall be sized to provide a minimum of 3 ACH. The exhaust fan shall be sized larger when required for mechanical ventilation cooling. The fan shall have a non-sparking wheel and the motor shall be located out of the airstream. The ventilation system for the shop shall be designed to provide a negative static pressure by exhausting 10% more air than is supplied. Supply air for the shop shall be 100% outside air.

6.8.3 Submittals

The Contractor shall submit the following for the equipment to be provided under this section of the specification: manufacturer's data including performance characteristics at design conditions; catalog

cuts showing dimensions, performance data, electrical requirements, compliance with standards as stated in paragraph CODES, STANDARDS AND REGULATIONS; drawings indicating location and installation details.

6.9 ELECTRIC HEATERS

6.9.1 Unit Heater

Electric resistance unit heaters shall be installed in spaces where only heating is required. Generally, unit heaters shall be mounted as high as possible. Unit heaters shall be of the industrial grade, very durable and securely fastened to the ceiling, wall or structure. Provide a self-contained electric heating unit, suspended from ceiling or structure, with fan and heating elements. Provide control-circuit terminals and single source of power supply with disconnect. Heating wire element shall be nickel chromium. Include limit controls for overheat protection of heaters. Provide tamper resistant integral thermostat.

6.9.2 Cabinet Heater

Use of cabinet heaters shall be limited to spaces requiring heating and is not subject to misuse or abuse. Use of cabinet heaters is allowed only as directed by the User. Provide a self-contained electric heating unit, recessed mounted in wall or structure, with fan and heating elements. Provide control-circuit terminals and single source of power supply with disconnect. Heating wire element shall be nickel chromium. Include limit controls for overheat protection of heaters. Provide tamper resistant integral thermostat.

6.9.3 Infrared Heaters

Infrared heaters shall be provided for spot heating of a large area such as maintenance bays and warehouses. Infrared heaters shall use electricity. Contractor shall position the infrared heaters to direct the radiant heat to only those areas where people normally work. Coordinate with User. Provide control-circuit terminals and single source of power supply with disconnect.

6.9.4 Submittals

The Contractor shall submit the following for the equipment to be provided under this section of the specification: manufacturer's data including performance characteristics at design conditions; manufacturer's certificate stating that each unit will perform to the conditions stated, catalog cuts showing dimensions, performance data, electrical requirements, compliance with standards as stated in paragraph CODES, STANDARDS AND REGULATIONS; complete shop drawings indicating location and installation details.
The manufacturer shall also submit a 2 year warranty for each of the units.

6.10 TEST ON COMPLETION

6.10.1 After completion of the work, the Contractor shall demonstrate to the Contracting Officer that the installation is adjusted and regulated correctly to fulfill the function for which it has been designed. The Contractor shall test, adjust, balance and regulate the section or sections of concern as necessary until the required conditions are obtained. Operational test shall be conducted once during the winter and once during the summer. Coordinate with the Contracting Officer on when the test shall be scheduled. Include tests for all interlocks, safety cutouts and other protective device to ensure correct functioning. All such tests shall be carried out and full records of the values obtained shall be prepared along with the final settings and submitted to the Contracting Officer in writing.

6.10.2 The following tests and readings shall be made by the Contractor in the presence of the Contracting Officer and all results shall be recorded and submitted in a tabulated form.

a. Ambient DB and WB temperatures
b. Room Inside Conditions:
   1. Inside room DB & WB temperatures
   2. Air flow supply, return and/or exhaust
   3. Plot all temperatures on psychrometric chart
c. Air Handling Equipment: Air quantities shall be obtained by anemometer readings and all necessary adjustments shall be made to obtain the specified quantities of air indicated at each inlet and outlet.
   Following readings shall be made:
   1. Supply, return and outside air CMH (CFM) supplied by each air conditioning system.
   2. Total CMH (CFM) exhausted by each exhaust fan
   3. Motor speed, fan speed and input ampere reading for each fan
   4. Supply, return and outside air temperature for each air-conditioning system.
d. Electric Motors:
   For each motor: (1) Speed in RPM
   (2) Amperes for each phase
   (3) Power input in KW

6.11 ELECTRICAL REQUIREMENTS FOR HVAC EQUIPMENT

(a) Note that electrical requirements for all HVAC systems shall be designed and installed to operate on the secondary power standard required herein. The existing power distribution system may require modifications or upgrades to support the additional power required by the HVAC unit. The Contractor is responsible to field verify all the conditions and provide complete shop drawings showing any incidental power upgrades. All electrical work shall comply with the National Electric Code.

(b) All thermostats shall be wall mounted near the return grilles in the room with the highest heat load generation and mounted 1.5 meters (5 feet) above the floor. In lieu of a thermostat, a temperature sensor may be located in the same location or in the return duct and connected to a thermostat located near the unit return. Thermostat shall be mounted 1.5 meters (5 feet) above the finished floor and be easily accessible. Thermostats for the latrine facilities shall be located near the unit return and mounted 1.5 meters (5 feet) above the finished floor. Operation of the control system shall be at the manufacturer's standard voltage for the unit.

(c) The following are the minimum requirements for motors regarding enclosure, insulation and protection:

1. Compressor Hermetic: Provide inherent (internal) overload protection.
2. Condenser: Provide internal thermal overload protection.
3. Evaporator (Open Class "A") fan motor type provides internal thermal overload protection.

6.12 CEILING FANS

6.12.1 Ceiling Fan

Provide 1320mm blade ceiling fans at one per 40 square meters of floor space. Fans shall have reversible motors. Center or distribute evenly in room. Coordinate placement with the lighting plan to prevent conflict or casting shadows. Fan mount shall be flush, standard, or angle mount depending on ceiling height. Fan shall be mounted such that the fan blade is approximately 2.44 meters above the finished floor. The fan shall be provided with out light kit. The finish shall be factory painted white. The controls shall be from either a single pole switch or from two 3 way switches to provide on/off operation. The electrical supply shall be 230volts, single phase, and 50 hertz. Install per manufacturers' instructions.

6.12.2 Submittals.

The Contractor shall submit the following for the equipment to be provided under this section of the specification: manufacturer's data including performance characteristics at design conditions; catalog cuts showing dimensions, performance data, electrical requirements, compliance with standards as stated in paragraph CODES, STANDARDS AND REGULATIONS; drawings indicating location and installation details.

6.12.3 Submittals.

The Contractor shall submit the following for the equipment to be provided under this section of the specification: manufacturer's data including performance characteristics at design conditions; catalog cuts showing dimensions, performance data; drawings indicating location and installation details.

6.13 PROPANE COOKING STOVE

Cooking area shall be provided canopy type exhaust only kitchen hoods and associated exhaust fans. These exhaust hoods shall include baffle type aluminum filters to trap grease/oil. The exhaust fan sizing calculations should recognize the use of propane stoves in the kitchen. Sizing should accommodate all propane burning stoves running simultaneously. Additionally, the placement of the exhaust hood should allow enough clearance for an average sized male to stand on top of the stove platform unobstructed, for standing on the stove is common local cooking practice. The higher than average placement of the hood will require the extension of the lip of the hood out further than normal, in order to catch the majority of the smoke and adequately vent the area. Propane tank shall be located out the DFAC covered in the fenced storage yard
New propane stoves shall be installed with consideration to ease of cooking operation and daily cleanup. The new propane stoves shall be set into a formed concrete opening such that it can easily be removed for replacement, maintenance and cleaning.

Each propane stove shall be provided with three burners. The propane stoves shall be of commercial quality and be capable of producing the highest BTU heat output with all three burners on. The center burner is low heat, center and middle burner is medium heat and all three burners is high heat. A shut off valve for each burner shall be provided at the face of the propane appliance.

Piping from the propane tanks to the respective propane stoves shall be wrought iron, ASTM B36.10M or steel (black or galvanized), ASTM A53. The steel piping shall terminate in front of the propane stoves with a shut off valve and quick disconnect nipple. A stainless steel flexible hose shall connect from the propane stove to the steel piping. Each end of the flexible hose shall be provided with quick disconnect fittings.
The propane piping shall not be embedded in the concrete floor. Installation of the propane piping in concrete trenches is highly recommended. The piping may be surface mounted provided that it is not susceptible to damage or causes any safety hazards.
Piping passing through the exterior wall shall be provided with pipe sleeves.

6.13.1 Propane Fuel Storage/Distribution

Propane Storage and Distribution shall be provided to support operation of the propane stoves for cooking and boiling tea. The bulk storage of fuels shall consist of above-ground horizontal steel tanks sized to store a 15-day supply of fuel. This single tank shall be complete with fill fittings, tank gauge, vent, and other fittings and appurtenances required for full and safe operation. Tanks shall be provided with support saddles, platform/stair and concrete pad. Bulk storage capacity shall be based on minimum four-week full load operation of the kitchen. Metal fuel tank saddles should not be placed directly on fuel containment area slabs. They should be elevated on piers to avoid moisture corrosion. Propane storage tanks shall be provided and installed in accordance with NFPA 58. The propane storage tanks shall be

installed on a concrete pad, and provided within an enclosure to protect the tanks from the elements. The Contractor shall coordinate with the User and the Contracting officer in determining the capacity of propane fuel required. The propane fuel capacity shall be based on frequency of cooking, consumption of fuel every cooking cycle, frequency and availability of replacement fuel tanks and spare capacity. This project will require that the Contractor provide the agreed to amount of fuel tanks filled with propane fuel at time of completion.

Provide chain link fence and gates around entire propane storage facility. Fence shall match perimeter Force protection fence with lockable gates, and concertina wire etc. Provide fuel filling system for unloading fuel from fuel tanker into individual bulk storage tanks comprising of truck pad(s), duplex fuel transfer pumps, piping manifold and valves as required for a complete system.

6.14 WOOD COOKING STOVE (NOT USED)

6.15 OPERATIONS AND MAINTENANCE (O&M) FOR MECHANICAL

(a) Contractor is required to provide a 12 month supply of parts for operation and maintenance of equipment according to the manufacturer's recommendations. In addition to this, the contractors shall provide an inventory of all items, location/address stored and secured, and commissioning plans.

(b) The O&M manuals must be provided prior to any training activities. Manuals shall be "tri-lingual" in Dari, Pashto and English.

(c) All control panels shall have tri-lingual name plates in Dari, Pashto and English.

(d) The contractor shall provide an outline of the training lesson plan (to be approved by the Government) prior to conducting training. CD recordings of training on video shall also be provided, after training is conducted.

7.0 PLUMBING

7.1 SCOPE OF WORK.

7.1.1 General

The Contractor shall design and build domestic cold and hot water systems, waste, drain and vent systems, waste-oil collection and storage and fuel-oil storage and distribution systems required in the facilities identified in Section 1010 Scope of Work and as described herein. The Contractor shall also be responsible for complete design and construction of all domestic and special plumbing systems required for full and safe operations in the Generator Plant, Water Storage and other facility or structures required in this contract.

The work covered in this scope also includes the delivery to site, erection, setting to work, adjusting, testing and balancing and handing over in full operating condition all of the plumbing equipment and associated plumbing works.

7.1.2 Sub-Contractors Qualifications

The plumbing systems shall be executed by a plumbing specialist subcontractor experienced in the design and construction of these types of systems.

7.1.3 Standard Products

All materials and equipment shall be standard product of a manufacturer regularly engaged in the manufacture of the product and shall duplicate items that have been in satisfactory use for at least two (2) years prior to bid opening.

7.2 CODES, STANDARDS AND REGULATIONS

The design and installation of equipment, materials and work covered under the plumbing services shall conform to the following standards, codes and regulations where applicable except where otherwise indicated under particular clause(s). The publications to be taken into consideration shall be those of the most recent editions. Standards other than those mentioned herein may be accepted provided that the standards chosen are internationally recognized and meet the minimum requirements of the specified standards. The Contractor shall submit proof of equivalency if requested by the Contracting Officer.

IPC – International Plumbing Code

NFPA - National Fire Protection Association

ASHRAE – American Society of Heating, Refrigeration and Air-Conditioning Engineers

ASME – American Society of Mechanical Engineers

ASTM – American Society for Testing and Materials

AWS – American Welding Society

UFC 4-229-01N dated 16 January 2004

7.3 PLUMBING SYSTEMS REQUIREMENTS

7.3.1 Water

Domestic cold and hot water shall be provided in the facilities to serve the water usage and plumbing fixtures provided for the facility. Water service to each facility shall enter the building in a mechanical, toilet, storage, or similar type space. The building service line shall be provided with a shut off valve installed either outside in a valve pit or inside the mechanical room or similar spaces. Water piping shall not be installed in or under the concrete foundation. All water piping shall be routed parallel to the building lines and concealed in all finished areas. Insulation shall be provided where required to control sweating of pipes or to provide protection from freezing.

7.3.2 Piping Materials

Domestic water shall be distributed by means of standard weight (schedule 40) galvanized steel pipe, Polyethylene (PE) plastic pipe (schedule 40 or 80). Waste and vent piping can be made of either galvanized steel pipe (schedule 40), or Polyvinyl Vinyl Chloride (PVC) conforming to ASTM D 2665. Corrosion protection shall be provided if galvanized piping comes in contact with earth or masonry floors, walls or ceilings.

7.3.3 Plumbing Fixtures

The following typical plumbing fixtures shall be provided:

a. Eastern Water Closet with flush tank assembly. Provide acid resisting fired porcelain enameled cast iron water closet complete with rotating No-Hub 'P' trap and No-Hub coupling to meet piping

requirements. Eastern Style water closet shall be furnished with integral non-skid foot pads and bowl wash down non-splashing flushing rim. The water closet shall be completely self supporting requiring no external mounting hardware and shall be flush with floor. The Eastern Style water closet shall incorporate waterproofing membrane flashing flange. Provide a cold water spigot 300mm above finished floor on the right (from a perspective of standing inside of the cubicle and looking out) sidewall of the cubicle. Spigot shall have a flexible hose and spray nozzle such that the occupant can wash over the water closet. Toilets shall be oriented north and south. Toilets shall not face east or west.
Western style toilets shall be provided as requested by the User.

b. Lavatories. All sinks shall be trough type constructed of block and concrete with ceramic tile exterior and lining capable of withstanding abuse. Provide maintenance access to waste piping and P-traps from under the sink. Lavatories inside the prison cells shall be tamper-proof with integral spout, soap depression, and outlet connection to slip 40mm OD tubing.

c. Sink Faucets. LN faucets shall be vandal proof, heavy duty cast brass with chrome plating with separate hot and cold water valves for manual mixing. Faucet handles shall be cast brass alloy with chrome plating. **No goose neck faucet fixtures shall be used**.

d. Janitor's Sink. Floor mount janitor, enameled cast iron with copper alloy rim guard. Provide hot and cold water valves with manual mixing. Faucet handles shall be cast brass alloy with chrome plating. Include a stainless steel shelf and three mop holders.

e. Shower. Showerhead and faucet handles shall be vandal proof, heavy duty cast brass with chrome plating for the LN facilities and regular cast brass chrome plated for coalition facilities. Provide hot and cold water valves for manual mixing. In addition to a shower head, provide each shower stall with a threaded faucet approximately 1.2 m AFF with hot and cold-water controls, mixing valve and a diverter type valve so water can be directed to either the shower or to the lower faucet. Shower shall be provided with low flow shower head. The shower head shall be heavy duty type and securely fastened to the wall.

f. Emergency Shower and Eye Wash Assembly. Provide emergency shower and or eye wash assembly in Power Plant and in other facilities where appropriate. Provide a floor drain in the area, if appropriate (where emergency water flowing on the floor may lead to additional safety or operational complications).

g. Service Sink. Standard trap type, enameled cast iron. Service sinks provided in maintenance areas shall be concrete. Service sinks in battery rooms shall be acid resistant.

h. Kitchen Sink. Single bowl shall be corrosion resisting formed stainless steel. Faucet bodies and spout shall be cast brass or wrought copper alloy. Handles, drain assembly, and stopper shall be corrosion resisting steel or copper alloy.

i. Ablution Trench. See building floor plans for size and construction of trench and number of stations. Provide trench drain with brass grating and strainer. Provide each station with hot and cold water valves with manual mixing. Faucet assembly shall be vandal proof, heavy duty cast brass with chrome plating with separate hot and cold water valves for manual mixing. Faucet handles shall be cast brass alloy with chrome plating.

j. Grease Interceptor (Exterior only). Shall be steel construction manual cleaning type with removable checker-plate cover complete with flow control valve. Tested and rated in accordance with PDI G-101. Concrete shall have a minimum compressive strength of 21 MPa (3045 psi) in 28 days (kitchen use only).

k. Floor Sink (P-13). Provide floor sink, circular or square, with 300mm overall width or diameter and 250mm nominal overall depth. They shall have acid resistant enamel interior with cast iron body, aluminum sediment bucket and perforated grate of cast iron. Outlet size as indicated on plans.

l. Floor or Shower Drain: Cast iron construction with galvanized body, integral seepage pan, and adjustable perforated or slotted chromium plated bronze, nickel-bronze, or nickel brass strainer consisting of a grate and threaded collar. Toilet room floor drains are similar except are provided with built-in, solid, hinged grate.

m. Trench Drains: Floor trench shall be concrete construction with a cast iron grate. The cast iron grate shall be sectionalized and hinged so that it can easily be opened to clean out the trench. Iron grates shall be fabricated in sections in length not greater than 1500 mm. The floor trench shall be provided with perforated aluminum pan inserts which can be removed to clean out large food particles. The floor trench drain shall be adjustable perforated or slotted chromium plated bronze, nickel-bronze, or nickel brass strainer consisting of a grate and threaded collar. This style of floor trench shall be installed in the kitchen area of the DFACs in response to kitchen cleaning practices of the local national staff.

n. Room hose bibs and floor drains shall be provided as required. Afghan dining facility kitchen area clean-up hose bib to be supplied with connecting hose on reel including approximately 12 meters of hose. Provide clean-up spray nozzle with hose assembly.

o. Provide P-Traps per International Plumbing Code IPC for all fixture drains, floor and trench drains, and shower drains. P-traps shall have minimum of 50 mm water seal.

p. Large Pot sink, provide clean-up spray nozzle with hose assembly.

7.3.4 Hot Water

Hot water shall be provided for the facility to supply 49°C (120°F) hot water to fixtures and outlets requiring hot water. Hot water of a higher temperature shall be provided only where required for special use or process. Hot water piping shall be routed parallel to the building lines and concealed within finished rooms. All hot water piping shall be insulated. A hot water re-circulating pump shall be provided if hot water piping run exceeds 30m.

7.3.5 Hot Water Heaters

The hot water shall be generated by electric water heaters with the exception of Latrine/Shower and large DFAC buildings (DFACs with seating for more then 250 personnel). The unit(s) shall be typically located inside a mechanical room, storage room, toilet/janitor room or similar type space. The unit(s) shall be of the commercially available tank type having low or medium watt density electric heating elements.

In cases where the pressure of the water coming into the tank will violate manufacturer recommendations, a pressure reducer shall be installed in the line before the water heater. Also, all water heaters shall be equipped with a blow-off valve that will empty into a nearby floor drain or to the exterior of the building.

7.4 WASTE, DRAIN AND VENT SYSTEM

Floor drains shall be provided in each room that contains a water source. Floor drains shall be provided in the mechanical equipment and toilet rooms as required. Floor drains shall be provided next to the electric water heaters. In mechanical rooms, floor drains shall be provided to avoid running drain piping long distances above or over the floor. A trench drain shall be provided for the DFAC Kitchen. All waste and vent piping shall be provided in accordance with the latest edition of IPC. Drain outlet shall use p-

trap system to trap sewer gases. P-trap drain should be a one-piece system without removable parts. Every trap and trapped fixture shall be vented in accordance with the IPC.

7.5 PLUMBING FOR BATTERY ROOMS

Water, drain and associated plumbing features for the battery room shall comply with requirements in Part 6 of UFC 4-229-01N.

7.6 SPECIAL PLUMBING SYSTEMS

Contractor shall design and construct compressor air storage and distribution, waste-oil collection and storage, fuel-oil storage and distribution and other plumbing systems that are required for full performance of equipment and operations and for maintenance in the Power Plant and Vehicle Maintenance facilities. These systems shall be designed and built in accordance with codes and publications referenced herein before and in compliance with equipment manufacturer recommendations.

7.6.1 Compressed Air Systems

Compressed air system shall be in accordance with UFC 4-229-01N. Compressed air shall be provided using a packaged air-cooled electric motor driven compressor and ASME rated receiver with air cooler and moisture separator to remove moisture and oil. Compressed air system shall be capable of operation up to 200 psig maximum for 125 psig normal units. High-pressure system (above 200 psig) shall be provided to supply compressed air to equipment where required. Provide an engine driven air compressor where generator electrical power is unreliable. The air distribution system shall be provided with necessary regulator valves to maintain desired pressure. Compressed air drops shall be provided in each maintenance bay, tire shop, tool room, paint shop and other areas requiring compressed air service. Where required, line filters, lubricators, and/or hose reels shall be provided. Compressed air piping shall be black steel pipe and painted to match wall color. Noise level of air compressor should not exceed acceptable db limits.

7.6.2 Waste/Hazardous Drainage

Waste or hazardous drainage from battery repair/charging areas shall be treated prior to entering the base general waste drainage system. Hazardous waste drainage piping shall be acid resistant. Smaller battery rooms shall have waste treatment available using an acid neutralizing tank.
Waste oil storage tanks shall be provided for collection of waste oil in the power plant and vehicle maintenance facilities. Waste oil storage tank shall be underground double-wall fiberglass or double-wall steel. Provisions should be made in the design of the underground storage tank that enable manual detection of leaks, prevent overfilling, facilitate liquid level detection, and allow for vapor release.

7.6.3 Drainage from Maintenance Areas

Drainage from maintenance areas, fueling areas, POL areas, etc., shall be treated prior to entering the base general waste drainage system. Treatment shall consist of sand and oil separators as required by facility function. Buried oil storage tanks shall be provided where required.

7.6.4 Generator Fuel Storage/Distribution

Fuel Oil Storage and Distribution shall be provided to support operation of diesel engine generators at the Power Plant, emergency generators and other locations. The bulk storage of fuels shall consist of above-ground horizontal steel tanks sized to store a 28-day supply of fuel, with containment dikes. These tanks shall be complete with fill tube and cap, suction tube, tank gauge, vent, and other fittings and appurtenances required for full and safe operation. Tanks shall be provided with support saddles,

platform/stair and concrete pad. Fuel shall be transferred from the bulk storage tanks by duplex transfer pumps into individual day tanks. Fuel piping shall be fiberglass for underground and steel for piping located above grade. Bulk storage capacity shall be based on minimum four-week full load operation of the plant. Metal fuel tank saddles should not be place directly on fuel containment area slabs. They should be elevated on piers to avoid moisture corrosion. Fuel containment area should have a sump or manually controlled water release valves for water removal.

7.5.4.1 Filling System

Provide fuel filling system for unloading fuel from fuel tanker into individual bulk storage tanks comprising of truck pad(s), duplex fuel transfer pumps, piping manifold and valves. The system shall provide remote fuel level monitoring panels at the pad(s).

7.6.5 Motor Pool Fuel Point (Storage/Dispensing)

Fuel storage and distribution shall be provided to support the vehicles used at various locations on base. The fuels shall be stored in one or more above-ground or underground horizontal steel tank as per capacity schedule given below.

Motor Pool 38,000 liters of Diesel and 10,000 liters of MOGAS.(for standard Battalion size compound) unless otherwise stated in the 1010 Scope of Work.

These tanks shall be complete with fill tube and cap, suction tube, tank gauge, vent, and other fittings and appurtenances required for full and safe operation. Tanks shall have overfill protection devices and remote overfill alarm. Tanks shall be provided with support saddles, platform/stair, concrete pad and leak spillage containment provisions. Fuels shall be transferred from the storage tanks by transfer pumps located within the fuel dispensing units. Fuel piping shall be fiberglass for underground and steel for piping located above grade. Provide separate dispensing units for diesel and MOGAS. Each dispensing unit shall be equipped with dual nozzles and key control. Fuel dispensing unit shall be installed on an island such that two vehicles can simultaneously fuel on either sides of the dispensing unit. Coordinate site design and route all contaminated drainage water from the fuel dispensing pad through an oil/water separator. Provide containment per applicable criteria.

Fuel point and ammo storage protection consists of reinforced concrete barriers that can be prefabricated or constructed at the site. The protection and should be placed over at least two sides and have a concrete top.

7.7 TESTING AND COMMISSIONING

The Contractor shall test all piping systems in accordance with IPC International Plumbing Code. The final test shall include a smoke test for drainage and vent system and pressure test for the domestic water piping. After completing the work, the Contractor shall demonstrate that all plumbing systems operate to fully satisfy the function for which these systems have been designed. The Contractor shall test, adjust, balance and regulate the system and its controls as necessary until the required designed conditions are met. The Contractor shall include tests for interlocks, safety cutouts and other protective devices to demonstrate safe operation. All such tests shall be carried out in the presence of the Contracting Officer and full written records of the test data and final settings shall be submitted to the Contracting Officer. After all tests are complete, the entire domestic hot and cold water distribution system shall be disinfected. The system shall not be accepted until satisfactory bacteriological results have been obtained.

8.0 FIRE PROTECTION

8.1 GENERAL

Facility construction and fire protection systems shall be installed in accordance with the publications listed herein and the publications referenced therein. Where a conflict occurs among various criteria, the more stringent requirement shall take precedence.

8.2 BUILDING CONSTRUCTION

Building construction shall conform to fire resistance requirements, allowable floor area, building height limitations and building separation distance requirements of the building code.

8.3 LIFE SAFETY

Facilities features will be provided in accordance with NFPA 101, among other references, to assure protection of occupants from fire or similar emergencies.

8.4 FIRE PROTECTION EQUIPMENT

All fire protection equipment shall be listed by Underwriters' Laboratories (UL) or approved by Factory Mutual (FM) or equivalent and shall be listed in the current UL Fire Protection Equipment Directory or Factory Mutual Approval Guide or equivalent.

8.5 FIRE DETECTION AND ALARM SYSTEM

Smoke detection – see electrical section for more fire alarm and detection details. Smoke detectors are required for each building. Smoke detectors shall have back up battery power and be installed according to all applicable fire protection codes. Fire detection and alarm systems shall be provided as required by NFPA 101 and UFC 3-600-01 and listed herein. Required fire detection and alarm systems shall be designed and installed in accordance with NFPA 72.

8.6 WATER SUPPLY FOR FIRE PROTECTION

A dedicated fire protection water supply is unavailable. Therefore, alternate methods of design and construction are being instituted.

8.7 PORTABLE FIRE EXTINGUISHERS

Portable fire extinguishers shall be provided inside all facilities and at exterior locations as required in accordance with NFPA 10. Generally, extinguishers will be of the multi-purpose dry chemical type except for occupancies requiring a special type extinguisher (e.g., carbon dioxide portable fire extinguishers for electrical rooms).

9.0 ELECTRICAL

9.1 GENERAL

Contractor shall design and construct all electrical systems for the facilities to be provided. This includes design, construction, all necessary labor, equipment, and material for a fully functional system. The new phase or addition shall interface with the existing installation electrical system. Attached sheets ANA-E-01, ANA-E-02, and 1100-E-07 show the present existing conditions. The contractor shall coordinate with the present contractor on site for the final configuration and conditions.

9.2 DESIGN CRITERIA

9.2.1 Applicable Standards

a. Design shall be in the required units as stipulated herein.
b. Conflicts between criteria and/or local standards shall be brought to the attention of the Contracting Officer for resolution. In such instances, all available information shall be furnished to the Contracting Officer for approval.
c. All electrical systems and equipment shall be installed in accordance with the requirements set forth in the documents referenced herein.
d. Acceptance Testing: Contractor shall develop and submit for approval complete acceptance test procedures on all systems provided. As a minimum the testing procedures shall comply with the requirements of the National Fire Protection Association (NFPA) and the International Electrical Testing Association Inc. (NETA).

9.3 MATERIAL

9.3.1 General

Unless noted otherwise, all material used shall be in compliance with the requirements of UL standards. In the event that UL compliant materials are not available, Contractor may then select applicable British Standards (BS), IEC, CE, CSA, GS, DIN listed material (or equivalent), but the contractor must prove equivalence and must provide the government with a full copy of the relevant specification(s)/standard(s). Material and equipment installed under this contract shall be for the appropriate application and installed in accordance with manufacturers recommendations.

Equipment enclosure types shall be in compliance with the National Electrical Manufacturer's Association (NEMA) or the International Electro-Technical Committee (IEC) standards.

Major components of equipment shall have the manufacturer's name, address, type or style, voltage and current rating, and catalog number on a non-corrosive and non-heat sensitive plate, securely attached to the equipment. All equipment delivered and placed in storage, prior to installation, shall be protected from the weather, humidity and temperature variation, dirt and dust, and any other contaminants. All equipment shall be in new condition, undamaged and unused.

9.3.2 Standard Product

All material and equipment shall be a standard product of a manufacturer regularly engaged in the manufacture of the product and shall essentially duplicate items that have been in satisfactory use for at least two (2) years prior to bid opening.

9.3.3 Design Conditions

All equipment shall be rated and designed for the maximum ambient temperature and altitude of the construction site. Equipment that is altitude and temperature sensitive, such as generators, shall be derated according to the manufacturer’s recommendations. Generic derating criteria for altitude and for ambient temperature may be used to approximate the required size of such equipment during the design phase, but a stipulation shall be placed on the construction plans to adjust the size according to the derating criteria specific to the manufacturer’s equipment chosen before the equipment is ordered.

9.3.4 Restrictions

Aluminum conductors shall not be specified or used except as bare steel reinforced (ACSR) overhead conductors in an aerial primary distribution system. Aluminum windings shall not be used in transformers.

9.4 DESIGN REQUIREMENTS

9.4.1 Power Plant

The electrical equipment for the expanded generating plant shall include, but not be limited to, diesel engine generators, expansion of the medium voltage switchgear, step-up transformers, compressors, pneumatic tanks, day tanks, relaying equipment and all other auxiliary equipment that is necessary for operating the prime power plant. All equipment items should have brief instructions posted on them in English and Afghan languages. Secondary wiring within the building shall be per paragraph 'Secondary Power Distribution System' below. All cabling within the Power Plant associated with Power Generation (Generator to Transformer to Switchgear) shall be installing underground. All cabling exterior of the building shall be in concrete encased ductbanks buried not less than 1200 mm below grade and duct size no smaller than 100 mm.

The contractor shall expand the existing power plant building to contain the required generators and their associated switchgear for this phase of construction. The building shall also contain space for future planned generators as well as their associated switchgear in the switchgear lineup. At the end of the project, the power plant shall have space for at least two future generators. The the addition to the switchgear lineup shall contain 15kV vacuum circuit breakers, one for each generator, and one for the new feeder if needed. The contractor shall provide all required conduit stub ups to connect all equipment (both present and planned) to the switchgear lineup. The contractor shall provide padmounted stepup transformers and the required conduits to connect the generators to their respective transformer and the transformers to the switchgear lineup.

9.4.1.1 Generators

Generators shall be skid mounted standard industry size, 1500 RPM, diesel-engine Prime Power rated units. Number of units shall be based on the required power for this project to meet the ultimate demand load plus 25% spare capacity. Contractor shall consider building sq footage of existing and any known future buildings planned for calculating ultimate electrical demand loads. Generating voltage shall be 3 phase, 380 volts, and 50 hertz, stepped up to 15kV, via transformers, for base wide Primary Power Distribution through the generator switchgear described below. Generator starting may be either pneumatic or electric, at the Contractor's option. Each generator shall be provided with a day tank with a minimum fuel capacity of 8 hours operating at 100% generated rated (kW) load. The generators shall be 1000KW (1320 KVA) to match existingThe current generators are Caterpillar, Diesel, Model Number 3512, 50Hz, 3 phase, 380V, 2006A. The generators furnished must be compatible with the existing generators. Contractor shall select generators with 380 V generating voltage and step-up to 15kV via 1500 kVA transformers for distribution. There are two open positions for new generators in the existing power plant. The contractor shall utilize the existing spare positions and expand the power house to meet the contract requirements. The Contractor shall schedule transformer and other long lead-time power submittals in time for approvals, procurement, delivery and installation to establish permanent power as soon as possible. Contractor is encouraged to offer solutions that will minimize the stocking of multiple sources of parts.

9.4.1.2 Medium Voltage (15 kV) Switchgear

The existing switchgear is dead-front type (i.e. no live parts shall be exposed) switchgear that consists of a Generator Bus and a Distribution Bus. Both buses are connected via a bus-tie circuit breaker. The distribution Bus is provided with three (3) 15 kV feeder circuit breakers. The new circuit breakers in the switchgear shall match existing.. Concrete encased high voltage feeder cable duct-bank shall be providing from each breaker cubicles to outside manhole(s). Spare conduit shall be providing in each duct-bank. Conduits shall be PVC, minimum 100 mm (4 inch) in diameter schedule 80. The existing switchgear is General Electric, Model Y963. The switchgear furnished must be compatible with the existing switchgear. Contractor is encouraged to offer solutions that will minimize the stocking of multiple sources of parts.

9.4.1.3 Generator Synchronizing Equipment

Generator synchronizing/paralleling equipment shall be providing, in order for the generator(s) to synchronize with an operating generator, prior to coming on-line. Minimum of one (1) prime power generator shall be on line at all times. Transfer Switch for automatic transfer of power when switching from one generator to another when the electrical demand load is below 90% of the running generators, and shall automatically start and synchronize another generator when the other generators are operating above 90% capacity so as to allow all generators to equally share the demand load. When only one generator is required, transfer between generators is fully automated with a programmable time clock. The other generator(s) shall run through a complete cool down cycle and then stop. Similarly, with the decrees in the demand load, the generator(s) shall drop-off line, one at a time, keeping a minimum of one generator operating on-line. All generator(s) shall go through a cool down cycle prior to coming to stop. All relaying shall be automatically reset for automatic restart and stopping of generators, as the load demands increases or decreases. Load sharing by the stand-by generator(s) shall be adjustable between 50% to 90% load on the operating generator(s). Synchronizing/paralleling of generators shall be automatic and manual.

9.4.1.4 Load Bank
A 1000kW 380V, 4 pole load bank is provided as part of the existing system.
9.4.1.5 Fuel Storage / Distribution System: Refer to mechanical section for generator fuel storage distribution system requirements.

9.4.1.6 Miscellaneous
Contractor shall be responsible for providing all relaying, metering and grounding equipment necessary for safe and efficient operation of the new generators added to the power plant. Relaying shall include, but not be limited to, differential, locking-out, over current, directional, reverse power,

9.4.1.7 Operating Instructions
Contractor shall provide, mounted in a frame, an updated complete electrical one-line diagram of the power plant with detail operating instruction. Instruction shall be mounting on a wall inside the switchgear room.
Similarly, complete fuel and cooling system schematic diagrams shall also be providing in the switchgear room. Brief operating instructions shall be post on major components in the power plant. These instructions shall be written in English and Afghanistan language.

9.4.2 Site Primary & Secondary Power Distribution System
Primary (15kV ‘Delta’) and secondary power distribution (380/220V ‘Wye’) shall be underground. Design and installation of primary and secondary power distribution systems shall be complete and in compliance with the requirements of the National Electrical Safety Code (ANSI/IEEE C2), UFC 3-550-03FA (also called Army TM 5-811-1), National Electrical Code (NFPA 70), and other electrical references listed in this RFP. Site-wide primary power distribution system is designed (laid-out) to be serviced by three (3) high voltage feeders. Feeder 3 has a portion missing between the power house and the tie switch (See attached drawing). All feeders are provided with feeder-to-feeder tie capabilities to transfer loads between feeders. Feeder tie points should be located in the field and away from the Power Plant. The contractor shall determine if the existing 3 high voltage feeders have sufficient capacity for the new CSB site. The existing feeders are 95 mm square. If they do, the contractor shall extend the existing primary distribution system and relocate the feeder tie point to the far end of the system, allowing the feeders to be tied together in the same manner as the existing system. The contractor shall also complete the portion of feeder three between TR#20 and TR#1 that is not complete. If the existing 3 high voltage feeders do not have sufficient capacity for the new CSB site, the contractor shall add an additional feeder to the switcher and run a new feeder and provide a new breaker. Relocate the tie point, and change the connection to accommodate four feeders.
Primary power distribution shall be complete, to include but not be limited to, fused cut-outs, arresters, terminals, cable guards, circuit breakers, transformers, and related items. All primary feeder taps shall be protected with fused cutouts. Long feeder runs shall be provided with sectionalizing devices, such as, in-line fuses, sectionalizer or recloser, as necessary. Minimum of 3 fuses, with appropriate rating, shall be provided as spares at each fused cut-out location. The Contractor shall complete a power system

analysis for the entire site and provide site power load calculation to determine the total site power requirements, and the power production requirement for the power plant. The Contractor shall perform load calculations to determine the number of required transformers to feed all facilities in this project, to include future facilities. The contractor shall also perform voltage drop calculations. All power system analysis, load calculations and voltage drop calculations shall be submitted as part of the 35% Design Analysis, and revised/updated for each design submittal. Primary Distribution shall be installed in accordance with the NESC, UFC 3-550-03FA, and other applicable standards listed in this RFP.

9.4.3 Raceways
Exterior raceways (conduits) shall be installed at a slope towards a manhole or hand-hole to avoid collection of water in the raceway. Conduit shall be PVC, thin-wall for concrete encasement and hardwall (Schedule 40) for direct burial. Direct buried conduit shall only be installed for street lighting circuits. Direct buried conduits shall be encased in concrete, when under paved areas or under road crossings. Primary and secondary cables shall be installing in conduit no less than 100mm (4 inch) in diameter. Secondary cable shall be installed in conduit no less than 50mm (2 inch). Direct buried conduit shall be installing 610mm (24 inch) below grade. All underground conduits shall use long-sweeping elbows. All communications conduits shall use longsweeping
elbows.

9.4.4. Existing Services / Building Loads
Contractor shall connect all existing active electric services to facilities in the Base, to the new power distribution system provided under this contract. Connection of existing services to the new system shall be via appropriately sized pad-mount transformer(s) and coordinated with the Contracting Officer.

9.4.5 Transformer Substations: Transformer substations shall be strategically located close to the loads. Dedicated transformer substations shall be provided for large loads. Transformers shall be Primary‘Delta’ and Secondary ‘Wye’ connected. Primary side load-break disconnecting means shall be provided with all transformers. Transformer substations shall be dead front, loop-feed, pad-mounted, compartmental, self-cooled type. Transformers shall come complete from manufacturer; use of third party transformer housings or add-on transformer housings shall not be permitted. Transformers shall have no exposed live components. Transformer selection, design, and installation shall be governed by NEC, NESC, ETL 1110-3-412, TM 5-684, UFC 4-510-01, UFC 3-550-03FA, UFC 3-550-03N, IEEE C57.12.28, ANSI/IEEE C57.12.22, IEEE C57.12.34, and C57.12.80.
Size of transformers, generators, and power feeds shall be governed by UFC 4-510-01, NFPA 99, and the NEC. In case of conflict between transformer design criteria between the above named standards, UFC 4-510-01 shall govern; in cases where UFC 4-510-01 can not resolve the conflict, it shall be brought to the attention of the Contracting Officer for resolution.

9.4.6 Underground Conductors: All underground conductors shall meet the requirements of the codes and standards listed in this RFP, including but not limited to: NESC, NEC, UFC 3-550-03FA, and related.

9.4.7 Secondary Power Distribution System
Secondary Power shall be 380/220 volts, 3 Phase, 4 Wires, 50 Hz. Building secondary power distribution system shall include main distribution, lighting and power panels as required. All panel boards shall be circuit breaker ‘bolt-on’ type panels. In large buildings separate lighting and power panels shall be provided. The minimum size circuit breaker shall be rated at 20 amperes. Circuit breakers shall be connected to bus bar(s) within the panel boards. Daisy chain (breaker-to-breaker) connection(s) shall not be acceptable. Indoor distribution panels and load centers shall be flush mounted in finished areas. All circuit breakers shall be labeled with an identification number corresponding to the panel schedule. A 3-pole circuit breaker shall be a single unit and not made up of 3 single pole circuit breakers connected with a wire or bridged to make a 3-pole breaker. All wiring shall be copper, minimum # 12 AWG (4mm sq), recessed in finished areas and surface mounted in metal conduits in unfinished areas. Conductors shall be size in accordance with NFPA 70. The use of 75 or 90 degrees C (minimum) terminal and insulated conductors is required. Use of 75 degree C conductors on circuits with protective

device terminals rated for 60 degree C is inappropriate. All panels shall be providing with a minimum of 25% spare capacity for future load growth. Power receptacles (outlets) shall be duplex, 20A/240 volts, 50 HZ, German (DIN) Standard. All splicing and terminations of wires shall be performed in a junction or device boxes. Proper wire nuts/connectors shall be used for splicing wire. No twist-wire connections with electrical tape wrapped around it shall be acceptable. All electrical installation shall be in accordance with the requirements of NFPA 70 (National Electric Code). Main Distribution Panel shall be provided with an ammeter, voltmeter and kilowatt-hour meter. Selector switch shall be provided for reading all 3 phases. All service entrance cables and equipment, such as main distribution panels etc., to the facilities shall be sized for the ultimate facility loads, to include any heating loads (infrared heating), initial and future provided by others.

9.4.8 Receptacles

General purpose receptacles shall be duplex, grounding (earthed) type, "flush" or "semi-flush" wall mounted type, color ivory and installed 450 mm above finished floor (AFF). In office or similar areas receptacles shall be provided at every 3.66 M intervals. In maintenance buildings 3-duplex receptacles shall be provided at each vehicle maintenance bay. In storage buildings, receptacles shall be providing in 10 m intervals. In communications rooms, receptacles shall be provided at 1 m intervals or closer. CEE Type receptacles with plugs 2P+E (240v) or 3P+E (380v) and with appropriate rating, shall be provided for, but not be limited to, washers, dryers, kitchen equipment and any other type of large pluggable equipment. Receptacle shall be complete to include box, cover plate and necessary screws/connectors and of the type most commonly used in Afghanistan. Receptacles near sinks or lavatories shall be switch operated and Ground Fault Circuit Interrupter (GFCI), or Residual Current Disconnect (RCD) type, with the trip setting of 10 milliampere or less. Sinks will have a receptacle above, with one dual receptacle serving two sinks that are side-by-side. Receptacles in wet/damp areas or within 1 meter (~3 feet) of sinks, lavatories, or wash-down areas shall be ground fault circuit interrupter (GFCI) type or Residual Current Disconnect (RCD) type, with the trip setting of 10 milliamperes or less. Total number of duplex receptacles shall be limited to six (6) per 16- or 20-ampere circuit breaker.

9.4.9 Lighting

Light Fixtures: Lighting fixtures shall be a standard manufacturer’s product. Fluorescent light fixtures shall be power factor corrected and equipped with standard electronic ballast(s). All light fixtures shall be capable of receiving standard lamps used locally. Light fixtures shall be mounted at 2.5M (8 ft), minimum, AFF. Fixtures may be pendant or ceiling mounted, depending on the ceiling height. All fixtures shall be fully factory wired. Lighting levels shall be as follows:

General Office Space / Computer Rooms 50 FC (540 Lux)
Conference Rooms 30 FC (320 Lux)
Dinning Rooms 30 FC (320 Lux)
Laundry Rooms 30 FC (320 Lux)
Bed Rooms 30 FC (320 Lux)
Kitchen 70 FC (750 Lux)
Lobbies 15 FC (160 Lux)
Lounges 15 FC (160 Lux)
Mechanical, Electrical Equipment Rooms 15 FC (160 Lux)
Stairways 20 FC (215 Lux)
Toilets 20 FC (215 Lux)
Storage Rooms 15 FC (160 Lux)
Corridors 10 FC (110 Lux)
Parking Lots 0.5 FC (5 Lux)
Roadways 0.5 FC (5Lux)

9.4.9.1 High Ceilings

Contractor may provide high bay Metal Halide light fixtures in facilities with high ceilings, provided that the replacement lamps for the fixtures are available locally.
Indoor lighting for all areas shall consist of fluorescent surface mounted light fixtures. Exterior lighting will be installing as referenced. Moisture resistant/waterproof fluorescent light fixtures shall be provided in high humidity and wet areas such as latrines and showers. Battery powered 'emergency' and 'exit' lights shall be provided within each building, as applicable, for safe egress during a power outage. All light fixtures shall be factory finished, complete and operational, to include but not be limited to, lens, globe, lamp, ballast etc. Industrial type fluorescent light fixtures shall not be use, except in unfinished mechanical or electrical service rooms. HID Metal Halide light fixtures may be providing in the generator / high bay area(s). Fluorescent light fixtures shall be providing in the remaining areas. Emergency lighting, emergency egress 'exit' lights and
exterior building lighting shall be provide as necessary.

9.4.9.2 Emergency "EXIT" Light Fixtures
Emergency "EXIT" light fixture shall be provided in accordance with NFPA requirements. Fixtures shall be single sided and for wall and/or ceiling mounting. Unit shall illuminate continuously and be provided with self-contained nickel cadmium battery pack, to operate on floated-battery or trickle charge circuit. Fixture shall operate satisfactorily for 90 minutes during a power outage. Unit shall have test/reset and lamp failure indication buttons. Primary operating voltage shall be appropriate for the available secondary voltage. Lettering "EXIT" shall be color red and not less than 6 inches (150 mm) in height and on matte white background. Illumination shall be via LEDs.

9.4.9.3 Above Mirror Lights
Above mirror lights shall be provided in toilet rooms.

9.4.9.4 Emergency Lighting
Battery powered emergency lights shall be provided within each building per NFPA for safe egress during power outage. Fixtures shall be provided with self-contained nickel cadmium battery pack to operate on stand-by circuit for 90-minute minimum. Unit shall have test/reset and lamp failure indication buttons. Primary operating voltage shall be 220 volts.

9.4.9.5 Light Switch
Light switch shall be single pole. Minimum of one light switch shall be provided in every room. Lighting in large rooms/areas may be controlled from multiple switches. Lighting contactors may be used to operate lighting in open or large bay areas. Rooms with multiple entrances shall have multi-way switches.

9.4.9.6 Exterior Lighting

Exterior lights for parking areas shall be controlled from a location in the building that is near to the areas being lit. The lights shall be controlled by a lighting contactor that is controlled by a photocell facing north on the exterior of the building. There shall be a capability to over ride the lighting contactor and turn lights on or off manually. Roadway lights shall be centrally controlled from a location determined by the COR. The operation shall be the same as for parking areq lights. 9.4.10 CONDUCTORS

All cable and wire conductors shall be copper. Conductor jacket or insulation shall be color coded to satisfy local utility requirements. Conductors shall be sized in accordance with this RFP and the listed codes and standards. For interior wiring, the use of 75 degree C (minimum) terminals and insulated conductors is required. Use of 75 degree C conductors on circuits with protective device terminals rated for 60 degree C is inappropriate. Wire size shall be a minimum of $4mm^2$ (#12 AWG).

9.4.11 GROUNDING AND BONDING

In general, grounding and bonding shall comply with the requirements of NFPA 70 and NFPA 780, and UFC 3-550-03FA. Generating equipment shall also comply with the requirements of UFC 3-540-04N.

Underground connections shall be exothermal welded. All exposed non-current carrying metallic parts of electrical equipment in the electrical system shall be grounded. Insulated grounding conductor (separate from the electrical system neutral conductor) shall be installed in all feeder and branch circuit raceways. Grounding conductor shall be green-colored, unless the local authority requires a different color-coded conductor. Ground rods shall be copper-clad steel. Ground resistance shall not exceed 25 ohms when measured more than 48 hours after rainfall using the fall of potential method outlined in IEEE 81. Communications Building: Grounding and Bonding shall meet the requirements of ANSI/TIA/EIA-942, IEEE 81.2 and IEEE 1100, as well as the NEC. Ground resistance shall not exceed 5 ohms when measured more than 48 hours after rainfall using the fall of potential method outlined in IEEE 81. A ground ring shall be installed around the communications building. Power plant: Grounding and Bonding shall meet the requirements of ANSI/TIA/EIA-942, IEEE 81.2 and IEEE 1100, as well as the NEC. Ground resistance shall not exceed 5 ohms when measured more than 48 hours after rainfall using the fall of potential method outlined in IEEE 81. A ground ring shall be installed around the Power Plant.

9.4.12 LIGHTNING PROTECTION

Vehicle Refueling Point, Refueling Vehicle Maintenance Facility, POL Storage Building, Arms Storage Clinic, and Medical Clinic shall have a lightning protection system installed per the NEC and NFPA 780, as well as other applicable standards listed in this document. Medical clinic lightning protection requirements shall also meet the requirements in UFC 4-510-01.
Ammo Supply Point and all fueling areas shall also implement static electricity controls in accordance with standards listed in this document.

9.4.13 ENCLOSURES

Enclosures for exterior applications shall be NEMA Type 4X (IEC Classification IP56) or better and for dry interior locations NEMA Type 1 (IEC Classification IP10) or better. For wet indoor locations, NEMA type 3S (IEC Classification IP54) or better shall be used.

9.4.14 FIRE DETECTION & ALARM SYSTEM (NOT USED)

Per directions from the Host Nation, no Fire Detection and Alarm System shall be provided in the facilities to be used by the Host Nation's personnel. However, Fire Alarm System shall be provided, as described below, in the facilities to be used by the U.S. Personnel. Fire Detection and Alarm System shall consist of hard-wired, multi-station smoke detectors, with building wide annunciation. No Fire Alarm System shall be provided in the Dining/MWR Facility.
Fire alarm cable shall be installed in recessed hard wall PVC conduit and plastered over it. In addition to building wide fire alarm annunciation, the system shall also be capable of automatically transmitting the alarm signal via telephone lines to the local Base Fire Department / Fire Station. System design shall be in accordance with the requirements of NFPA 72. Fire alarm system shall be complete and a standard product of one manufacturer. Contractor shall provide hard-wired carbon monoxide (CO_2) detectors, with local in-room annunciation, in all rooms where wood burning or oil-fired heaters will be provided.

9.4.15 TRANSIENT VOLTAGE SURGE SUPPRESION (TVSS)

Transient Voltage Surge Suppression shall be provided utilizing surge arresters to protect sensitive and critical equipment. As a minimum TVSS protection shall be provided at each panel serving electronic loads and shall be shown on the panel schedule. It is recommended that Metal Oxide Varistors (MOV) technology be used for such applications.

9.4.16 CONDUIT RACEWAY SYSTEM

Metal conduit system shall be complete, to include but not limited to, necessary junction and pull boxes.

Smallest conduit size shall be no less than 20mm (0.75 inch) in diameter. All empty conduits shall be furnished with pull wire or cord or rope (depending on the size of conduit and length of run). System design and installation shall be per NFPA 70 requirements. Exterior conductors below grade shall be installed in concrete encased PVC conduit at a depth of 1220 millimeters.

9.4.17 CABLE TRAY RACEWAY SYSTEM

Cable trays shall be ladder type and provided with, but not limited to, splices, end plates, dropouts and miscellaneous hardware. System shall be complete with manufacturer's minimum standard radius and shall be free of burrs and sharp edges. Nominal width of cable tray shall be 300mm (12 inch) and rung spaced at 150mm (6 inch). Nominal depth shall be 100mm (4 inch). System design and installation shall be per NFPA 70 requirements.

9.4.19 TELEVISION SYSTEM

Television System shall consist of television outlets and an empty metal conduit raceway system, to include necessary junction boxes and pull wire. The Contracting Officer shall determine outlet locations. Television monitors, coaxial cable any amplification devices shall be provided by others. One 2 inches conduit shall be providing from the television junction box to the outside communication hand-hole. All coaxial cable for television systems or other systems shall be RG-6 at a minimum.

9.4.20 IDENTIFICATION NAMEPLATES
Major items of electrical equipment, such as the transformers, manholes, hand holes, panel boards and load centers, shall be provided with a permanently installed engraved identification nameplate.

9.4.21 SCHEDULES

All panel boards and load centers shall be provided with a panel schedule. Schedule shall be typed written in English and Afghan languages.

9.4.22 SINGLE LINE DIAGRAM

Complete single line diagram shall be provided in every transformer distribution panel and in Main Distribution Panel in each building. Single line diagram shall show all panels serviced from the transformer distribution panel and the MDP respectively.

9.5 OPERATIONS AND MAINTENANCE (O&M) FOR ELECTRICAL

(a) Contractor is required to provide a 12 month supply of parts for operation and maintenance of equipment according to the manufacturer's recommendations. In addition to this, the contractors shall provide an inventory of all items, location/address stored and secured, and commissioning plans.

(b) The O&M manuals must be provided prior to any training activities. Manuals shall be "tri-lingual" in Dari, Pashto and English.

(c) All control panels shall have tri-lingual name plates in Dari, Pashto and English.

(d) The contractor shall provide an outline of the training lesson plan (to be approved by the Government) prior to conducting training. CD recordings of training on video shall also be provided, after training is conducted.

10. COMMUNICATIONS SYSTEM

10.1 General

10.1.1. Applicable Specifications

The Publications listed below form a part of this specification to the extent referenced. The publications are referred to in the text by designation only.

United States Department of Agriculture, Rural Utilities Service
RUS Bulletin 1751F-643 (2002) Underground Plant Design
RUS Bulletin 1751F-644 (2002) Underground Plant Construction
RUS Bulletin 1753F-151 (2001) Construction of Underground Plant,
Parts II & III
RUS Bulletin 1753F-201 (1997) Acceptance Test and Measurements
Of Telecommunications Plant
RUS Bulletin 1753F-208 (1993) Specifications for Filled
Telephone Cables with Expanded
Insulation (PE-89)
RUS Bulletin 1753F-401 (1995) Standards for Splicing Copper
And Fiber Optic Cable (PC-2)
RUS Bulletin 1753F-601 (1994) Specifications for Filled
Fiber Optic Cables (PE-90)
RUS Bulletin 1753E-001 (1996) RUS General Specification for Digital, Stored Program
Controlled, Central Office Equipment, RUS Form 522.
RUS Publication IP 344-2 (2006) List of Materials Acceptable
For Use on Telecommunications Systems of RUS Borrowers.
RUS Bulletin 345-65 (1978) Shield Bonding Connectors (PE-33)
RUS Bulletin 345-83 (1982) REA Specification for Gas Tube
Surge Arrestors (PE-80)
RUS Bulletin 1753E-001 (1996) RUS General Specification for
Digital Stored Program Controlled Central
Office Equipment, (Form 522)
American National Standards Institute/Telecommunications Industry Association/Electronics Industry Association
ANSI TIA/EIA 606-A (2002) Administration Standard for
The Telecommunications Infrastructure
ANSI TIA/EIA 607-A (2002) Commercial Building Grounding (Earthing) and Bonding Requirements for Telecommunications
ANSI TIA/EIA 568 (2001) Commercial Building Telecommunications Cabling Standard
ANSI TIA/EIA 606-A (2004) Commercial Building Standard for Telecommunications Pathways and Spaces
ANSI TIA/EIA 606-A (2004) Customer-owned Outside Plant Telecommunications Infrastructure Standard

10.1.2 Communication Systems Design

The communications system for Herot is to be designed, supplied and constructed by the Contractor. The design and construction of the systems shall be in accordance with the references and the requirements contained herein.

10.2 Exterior Communication Manhole System

The contractor shall construct a manholes/handholes and duct system. The manholes and hand-holes shall be constructed in accordance with the contract drawings. The maximum distance between manholes and/or hand-holes shall be 140 m (450 ft). The ducts shall be direct buried with a minimum of 1200 mm of properly tamped dirt/backfill on the top. Hand-holes shall be installed in laterals in between

manholes and buildings and only where the distance between the main duct system and the building is 100 meters or more. The maximum number of ducts in a hand-hole wall shall be two, with one having four (4) inner ducts installed unless there are two buildings close by and can be fed from one hand hole. In this case, four (two with inner ducts) conduits can be installed in the walls.

10.3 Exterior Conduit

The underground conduit for the manhole and duct system shall be direct buried (1 meter below surface), 100 mm DB type PVC or schedule 80, PVC. Inner ducts shall be four (4) 25mm PVC or PE inner ducts field installed in the outer-duct. The inner ducts shall be installed in the duct face and secured with properly sized duct plugs which expand to seal the duct. The ducts will be reinforced concrete encased where a road or taxi way is crossed. The ducts (inner and outer) shall be listed on the RUS list of materials acceptable for use on RUS projects. Cable racking diagrams (manhole/hand-hole butterflies) shall be provided for the manholes and hand-holes. The minimum duct configuration in the main duct system shall be a six way duct, being three conduits wide by two conduits deep (3 X 2) with two of the conduits having inner-ducts installed. Laterals off of the main duct system manhole to manhole shall be a minimum of a 4 way (2x2) with one duct having inner ducts. The duct system from the manhole/hand hole to a building with cable installed shall be a 1x 2, 100 mm PVC duct bank with one duct having inner ducts. The duct system from a manhole/hand hole to a building with allocations only shall be two (2), four inch (100mm) DB type or schedule 80 PVC conduits stubbed out 3 meters from the manhole/hand hole. All conduits shall be terminated in ABS plastic terminators cast into the walls of the concrete structures. In manholes, all conduit windows shall be recessed.

10.4 Exterior Telephone Cable

The Contractor shall install copper and fiber optic cable in accordance with the references and the cable requirements listed below. The copper cable shall be 24 AWG, RUS PE89 type, foam skin polyolefin, with an outer layer of solid colored polyolefin and a copolymer coated 8 mil aluminum tape shield. The fiber optic cable shall be a single mode, RUS PE90 type, with a 6 mil, copolymer coated steel shield. The fiber shall not have any internal splices and have a maximum loss of .4dB/Km at 1310nm and .3dB/Km at 1550nm. The copper and fiber optic cable shall be installed, grounded/bonded, spliced and tested in accordance with RUS standards.

10.5 Splices

10.5.1 Copper Splices

25 pair modules shall be used on copper splices 25 pairs or greater and discrete connectors shall be used on lesser count cable splices. The copper splice closures shall be flash tested with nitrogen in accordance with the manufacturer’s recommendations before encapsulation. The encapsulant shall fill all of the splice interstices. The copper splicing connectors, bonding hardware, splice closures and encapsulant shall be on the RUS list of material acceptable for use on RUS projects, IP 344-2. Bonding and grounding shall be in accordance with the RUS standards. The copper splice closure shall be installed by the copper splicer only. The copper cable splicer (s) shall have 7 years documented unsupervised experience in the installation of the splice closure being used and 7 years experience splicing RUS type cable.

10.5.2 Fiber Optic Splices

The fiber optic splice closure shall be equipped with splice trays that properly hold the fusion splice protectors (stainless steel rod with heat shrink tube). The splice loss shall be .02dB or less as measured by the fusion splicing machine and .2dB as measured by an OTDR. The fiber optic splice closure shall be flash tested with nitrogen in accordance with the manufacturer’s recommendations and also be listed in RUS IP 344-2. All bonding hardware shall also be listed in RUS IP 344-2. Bonding and grounding shall be in accordance with the RUS standards. The fiber optic splice closure shall be installed by the

fiber optic splicer only. The fiber optic cable splicer (s) shall have 7 years documented unsupervised experience in the installation of the splice closure being used and with RUS cable. The fiber optic splice shall also have a minimum of 7 years documented unsupervised experience with fusion splicing machines and a minimum of three years with the particular make and model of the machine that will be used.

10.6 Main Distribution Frame
The contractor shall route all communications to the Main Distribution Frame in the communications building.

10.6.1 Protected Entrance Terminals

Building Protected Entrance Terminal, 25, 50 or 100 Pair
The PETs shall consist of an input splice chamber with punch down blocks for the copper cable pairs, a protector field for 5 pin connectors and a factory installed output punch down block terminal for each outside plant cable pair. The PET shall be listed in RUS 344-2. The station cables shall be terminated on a field installed category 5e, 110 type punch down block and jumpers shall be installed between the PET block and the field installed block to connect dial tone to the outlet.

10.6.2 Protected Entrance terminal, 6 or 12 pair. The PETS shall consist of blocks with two well type heavy duty gas tube protector units. The six pair shall consist of three units where as the 12 pair will consist of 6 units. Every building with terminated cable shall be equipped with gas tube protectors. The station cables will be terminated on a category 5e 110 “station” block and jumpers shall be installed between the PET and the “station” block to connect dial tone to the outlet.

10.7 Patch Panels

10.7.1 Fiber Optic Patch panels, all buildings with data outlets.

The fiber optic terminations shall consist of the outside plant cable being fusion spliced to single mode pigtails with factory installed SC connectors. The fusion splice shall have a splice loss of .02 dB or better as measured by the splicing machine and .2dB as measured by an OTDR. The pigtails shall have a singlemode insertion loss of less than .35dB with the typical being 15 dB and a singlemode return loss better than -55dB. The fusion splices shall be protected by a stainless steel sleeve and heat shrink tube and placed in a splice tray. The terminations shall be contained in a wall mounted hinged door enclosure. The enclosure shall be equipped with hardware to properly store 1 meter of fiber slack. The enclosure shall be designed to handle adapter panels with three duplex SC connectors per adapter panel. The SC connectors shall have zirconia ceramic sleeves. The enclosure shall be capable of mounting four (4) adapter panels. Blank adapter plates shall be used wherever there are no fiber optic adapter panels. One duplex single mode fiber optic patch cord shall be provided for each duplex fiber optic port. The fiber patch cords shall have a mated pair insertion loss of less than .35dB with a typical loss of.15dB and a typical mated return loss of less than -55dB.

10.7.3 Copper Patch Panels, Category 5e - All Buildings with Data Outlets

Provide one patch panel port per data outlet plus 20% spare. The largest patch panel allowed shall be 48 port and the smallest 12 port. Where the 12 port is used, it shall be a category 5e, 12 port patch panel mounted on an 89 type block frame for the station cables. The 24 or 48 port patch panel shall be mounted on a swing down bracket mounted on the backboard. Cable guides and wire management bars shall be provided. Provide one category 5e patch cord, (RJ45-RJ45) per patch panel port. The Patch cords shall meet the minimum performance requirements specified in EIA/TIA-568B.1, EIA/TIA-568B.2 and EIA/TIA-568B.3.

10.8 Outside Plant Cable

The outside plant cable (cable size and cable counts) shall be engineered and installed in accordance with the referenced standards. The OSP cable engineering shall be approved by AED before any cable is ordered. Under no circumstances will home runs from each building to the communications building be allowed; normal telephone cable distribution engineering standards will be used, meaning that large cables will be installed from the vault splices and the cables will get smaller as the buildings are provided service.

10.8.1 Spare Cable Pairs and Fiber Optic Strands

There shall be spare cable pairs and fiber strands in the manholes/hand holes as required ensuring that standard sized cables are used. Dead Cable pairs shall be spliced through and cleared and capped in proper connectors. The 25 pair binder grouping of the cable shall be maintained. When the smaller (6 pair or 12 pair) counts are used, the first 6 pair count or first two 6 pair counts are used, the 13th pair of the count is cleared and capped, and then the second pair counts 14th through 25 pair count will be used. Under no circumstances will a split binder count be used. The 6 strand grouping of the fiber optic cable plant shall also be maintained.

10.9 Interior Communications Cabling

All interior communications copper cable shall be category 5e at a minimum and shall meet the performance requirements specified in EIA/TIA-568B.1, EIA/TIA-568B.2 and EIA/TIA-568B.3. All interior communications fiber optics cable shall be multi mode and meet the performance requirements specified in EIA/TIA-568B.1, EIA/TIA-568B.2 and EIA/TIA-568B.3.

10.9 The Contractor shall provide cable (copper and fiber optic cable) count provisions, either installed in the building or allocated in cable stubs in manholes/handholes for all buildings on the site plan, (contracted buildings and future). Conduit stub outs in manholes/handholes shall be provided for all buildings on the site plan. The following buildings will either have the cables installed and terminated in the building OR have the cables allocated in the cable counts and left in the manhole/handhole cable stub out closures.

10.9.1 Battalion HQ / Admin building.

50 pairs copper, 12 strands single mode fiber optic cable. Copper and fiber shall be installed in the building, terminated and tested. All outlets in the building shall be dual RJ 45, category 5e, one white labeled voice and one blue labeled data. An additional 50 pair copper and 12 strand fiber optic cable shall be installed in the command center constructed on the buildings. The cables shall be part of the consolidated 100 pair copper, 24 strand fiber optic “Command Center” cables installed from the respective MDFs to the command centers in the buildings. The command centers shall have dual category 5e, RJ 45 outlets installed on the walls at 1.5 meter intervals. Each Battalion /Company HQ building.office, room shall have telephone and computer data outlets. Telephone/data System shall include cross-connect boxes, duplex RJ-45 telephone outlets with a minimum of 4 pair Category 5 Enhanced (CAT 5e) cable terminating at each outlet (jack). The Contracting Officer shall determine outlet locations for individual rooms. Telephone wiring shall be recessed in finished areas and surface mounted in metal conduits in unfinished areas. Two 4 inches conduits shall be providing from the cross connect box to the outside communication hand-hole. See paragraphs 10 thru 10.16 below for additional requirements for communications systems.

10.9.3 All Barracks

12 pairs copper and 6 strands fiber optic cable installed, terminated and tested in the building. All outlets in the building shall be dual RJ 45, category 5e, one white labeled voice and one blue labeled data.

10.9.4 DFAC

12 pairs copper and 6 strands fiber optic cable installed, terminated and tested in the building. All outlets except wall outlets in the building shall be dual RJ 45, category 5e, one white labeled voice and one blue labeled data.

10.9.5 POL Storage

12 pairs copper and 6 strands fiber optic cable allocated in the cable plant and accessible in the closest manhole/handhole to the building.

10.9.6 Guard Tower, 25 pairs copper installed and terminated in the building. 6 strands fiber optic cable allocated in the cable plant and accessible in the closest manhole/handhole to the building. Copper to be fully tested and fiber to be tested to ensure no fractures occurred during installation. The 25 pair cable "perimeter cable" from the MDF shall be connected from each guard house, tower and gate house and back to the MDF.

10.9.7 GSE Communication and Armament Maintenance Facility.

25 pairs copper, 12 strands single mode fiber optic cable. Copper and fiber shall be installed in the building,

10.9.8 Vehicle Refueling Point

12 pairs copper and 6 strands fiber optic cable allocated in the cable plant and accessible in the closest manhole/handhole to the building.

10.9.9 General Warehouse Storage

12 pairs copper and 6 strands fiber optic cable allocated in the cable plant and accessible in the closest manhole/handhole to the building.

10.9.10 All Wheeled Vehicle Maintenance Facilities

6 pairs copper, installed, terminated and fully tested in the building. No fiber.

10.9.11 Toilet Shower Ablution Laundry Facility.

12 pairs copper installed and terminated in the building. No fiber. Copper to be fully tested.

10.9.12 Communications Building. All cables originate from this building.

10.9.13 Security Administration Building

25 pairs copper, 12 strands single mode fiber optic cable. Copper and fiber shall be installed in the building,
10.9.14All buildings not included above but included in the master plan (future), shall be considered to have requirements of 12 copper cable pairs and 6 fiber strands for planning purposes.

-END OF SECTION-

SECTION 01060

SPECIAL CLAUSES

PART 1 GENERAL

1.1 PRECONSTRUCTION CONFERENCE

1.1.1 Schedule of Meeting

At the earliest practicable time, prior to commencement of the work, the Contractor and any Subcontractors whose presence is necessary or requested, shall meet in conference with representatives of the Contracting Officer to discuss and develop a mutual understanding relative to the details of the administration and execution of this contract. This will include but not necessarily be limited to the Contractor's Quality Control (CQC) Program, the Contractors Accident Prevention Program, submittals, correspondence, schedule, access to the work site, security requirements, interface requirements, temporary facilities and services, hazards and risks, working after normal hours or on weekends or holidays, assignment of inspectors, representations, special requirements, phasing, and other aspects of this project that warrant clarification and understanding.

1.1.2 Meeting Minutes

It shall be the responsibility of the Contractors CQC System Manager to prepare detailed minutes of this meeting and submit those minutes to the Contracting Officer for approval within three (3) workdays. Any corrections deemed necessary by the Contracting Officer shall be incorporated and resubmitted within two (2) calendar days after receipt. Upon approval of the minutes by the Contracting Officer, the Contractor shall distribute the minutes to all parties present or concerned.

1.2 AREA USE PLAN

The Contractor shall submit to the Contracting Officer, within ten (10) calendar days after award of this contract, an Area Use Plan designating intended use of all areas within the project boundaries. This plan shall include, but not necessarily be limited to the following: the proposed location and dimensions of any area to be fenced and used by the Contractor; construction plant and building installations/the number of trailers and facilities to be used; avenues of ingress/egress to the fenced areas and details of the fence installation; drawings showing temporary electrical installations; temporary water and sewage disposal installations; material storage areas; hazardous storage areas. Any areas that may have to be graveled shall also be identified. The plan shall also include a narrative description of the building structural system, the site utility system and the office or administration facilities. The Contractor shall also indicate if the use of a supplemental or other staging area is desired. The Contractor shall not begin construction of the mobilization facilities prior to approval by the Contracting Officer of the Area Use Plan described herein.

1.3 CONTRACTOR'S MOBILIZATION AREA

The Contractor will be permitted to use an area [approved] [designated] by the Contracting Officer within the contract limits for operation of his construction equipment and plants, shops, warehouses, and offices. The Contractor is responsible for obtaining any required additional mobilization area above that designated. The construction site shall be cleared of construction debris and other materials and the area restored to its final grade.

1.3.1 Contractor's Temporary Facilities

1.3.1.1 General

All facilities within the Contractor's mobilization area shall be of substantial construction suitable for the local weather conditions. Sanitary facilities shall meet the requirements of Corps of Engineers, Safety and Health Requirements Manual EM 385-1-1. Local nationals will not be granted any privileges under this contract.

1.3.1.2 Administrative Field Offices

The Contractor may provide and maintain administrative field office facilities within the mobilization area at the designated site. Government office and warehouse facilities will not be available to the Contractor's personnel.

1.3.1.3 Storage Area

The Contractor shall construct a temporary 1.8 meter (6 foot) high chain link fence around trailers and materials. The fence shall include plastic strip inserts, colored green or brown, so that visibility through the fence is obstructed. Fence posts may be driven, in lieu of concrete bases, where soil conditions permit. Trailers, materials, or equipment shall not be placed or stored outside the fenced area unless approved in writing by the Contracting Officer.

1.3.1.4 Plant Communication

Whenever the Contractor has the individual elements of its plant so located that operation by normal voice between these elements is not satisfactory, the Contractor shall install a satisfactory means of communication, such as telephone or other suitable devices. If radio communication is approved by Contracting Officer / installation security office, frequency selection shall be approved by Contracting Officer to prevent interference with installation operations. Such devices shall be made available for use by Government personnel.

.

1.3.1.5 Appearance of Mobilization Site Facilities and/or Trailers

Mobilization Site Facilities and/or Trailers utilized by the Contractor for administrative or material storage purposes shall present a clean and neat exterior appearance and shall be in a state of good repair. Trailers or other transportable structures which, in the opinion of the Contracting Officer, require exterior painting or maintenance will not be allowed on the construction site until such work or maintenance has been performed to the satisfaction of the Contracting Officer.

1.3.1.6 Maintenance of Storage Area

Fencing shall be kept in a state of good repair and proper alignment. Should the Contractor elect to traverse unpaved areas which are not established roadways with construction equipment or other vehicles, such areas shall be covered with a layer of gravel as necessary to prevent rutting and the tracking of soil onto paved or established roadways; gravel gradation shall be at the Contractor's discretion.

1.3.1.7 Security Provisions

Adequate outside security lighting shall be provided at the Contractor's temporary facilities. The Contractor shall be responsible for the security of its own facilities and equipment.

1.3.1.8 Sanitation

a. Sanitary Facilities: The Contractor shall provide portable sanitation facilities for the Contractor's use. The Contractor shall be responsible for maintaining such facilities at no expense to the Government.
b. Trash Disposal: The Contractor shall be responsible for collection and disposal of trash from the work areas and from the mobilization area. General construction debris and demolition debris shall be collected and transported by the Contractor to a location designated by the Government. Construction debris, waste materials, packaging material and the like shall be removed from the work site daily. Loose debris capable of being windblown, shall be immediately placed in sealed or covered containers to prevent it from being blown onto taxiways or runways. Any dirt or soil that is tracked onto paved or surfaced roadways shall be cleaned daily. Materials resulting from demolition activities that are salvageable shall be stored within the fenced area described above. Stored material not indoors, whether new or salvaged, shall be neatly stacked when stored.

1.3.1.9 Telephone

The Contractor shall make arrangements to install and pay all costs for telephone facilities desired.

1.3.1.10 Restoration of Storage Area

Upon completion of the project and after removal of mobilization facilities, trailers, materials, and equipment from within the fenced area, the fence shall be removed and will become the property of the Contractor. Areas used by the Contractor for the storage of equipment or material, or other use, shall be restored to the original or better condition. Gravel used to traverse unpaved areas shall be removed and all such areas restored to their original conditions.

1.3.2 Protection and Maintenance of Traffic

During construction the Contractor shall provide access and temporary relocated roads as necessary to maintain traffic. The Contractor shall maintain and protect traffic on all affected roads during the construction period except as otherwise specifically directed by the Contracting Officer. Measures for the protection and diversion of traffic, including the provision of watchmen and flagmen, erection of barricades, placing of lights around and in front of equipment and the work, and the erection and maintenance of adequate warning, danger, and direction signs, shall be as required by the Host Nation and base authorities having jurisdiction. The traveling public shall be protected from damage to person and property. The Contractor's traffic on roads selected for hauling material to and from the site shall interfere as little as possible with base traffic. The Contractor shall investigate the adequacy of existing roads and the allowable load limit on these roads. The Contractor shall be responsible for the repair of any damage to roads caused by construction operations.

1.3.2.1 Use of Existing Roads as Haul Routes

The Contractor shall be responsible for coordinating with the base authorities for use of any existing roads as haul routes. Construction, and routing of new haul roads, and/or upgrading of existing roads to carry anticipated construction traffic shall be coordinated with the Base authorities and is the sole responsibility of the Contractor.

1.3.2.2 Employee Parking

The Contractor's employees may be allowed parking on the military installation. The Contractor is responsible for transporting workers (local nationals) from off post to the worksite, coordinating security identification screening, and cooperating in gate searches with the base authorities. The government reserves the right to terminate any and all contractor parking at any time.

1.3.3 Temporary Project Safety Fencing and Barricades

The Contractor shall impose all measures necessary to limit public access to hazardous areas and to

ensure the restriction of workers to the immediate area of the construction and mobilization site. The Contracting Officer may require in writing that the Contractor remove from the work any employee found to be in violation of this requirement.

1.3.3.1 Barricades

Barricades shall be required whenever safe public access to paved areas such as roads, parking areas or sidewalks is prevented by construction activities or as otherwise necessary to ensure the safety of both pedestrian and vehicular traffic. Barricades shall be securely placed, clearly visible with adequate illumination to provide sufficient visual warning of the hazard during both day and night. Travel to and from the project site shall be restricted to a route approved by the Contracting Officer.

1.3.4 Host Nation Authorizations, Permits and Licenses

It shall be the Contractor's responsibility to obtain such local authorizations, permits and licenses necessary to establish his quarry operations, batching operations and haul routes (See Special Clause entitled: COMPLIANCE WITH HOST COUNTRY RULES AND CUSTOMS).

1.4 RESPONSIBILITY FOR PHYSICAL SECURITY

Prior to mobilization, the Contractor shall submit his proposed means of providing project security to prevent unauthorized access to equipment, facilities, materials and documents, and to safeguard them against sabotage, damage, and theft. The Contractor shall be responsible for physical security of all materials, supplies, and equipment of every description, including property which may be Government-furnished or owned, for all areas occupied jointly by the Contractor and the Government, as well as for all work performed.

1.5 DUST CONTROL

The Contractor shall be required to control objectionable dust in the work areas, access roadways, and haul roads by means of controlled vehicle speeds or dust palliatives. Vehicles transporting sand, cement, gravel or other materials creating a dust problem shall be covered, as directed by the Contracting Officer, or in accordance with local Laws, codes, and regulations.

1.6 DIGGING PERMITS

1.6.1 Requirements for Digging Permits

1.6.2 Requests for Digging Permits

Requests for Digging Permits shall be submitted to Contracting Officer a minimum of seven (7) days prior to the start of the work activity covered by the permit. The request for a Digging Permit shall include a narrative description of the work to be performed and a detailed map of the area of the excavation clearly marking the location of all known utilities or other obstructions. If the work activity covered by the Digging Permit request also requires a utility outage, a separate request for the outage shall be submitted in accordance with the paragraph entitled CONNECTIONS TO EXISTING UTILITIES.

1.6.3 Preparation of Requests for Digging Permits

Prior to submitting a request for a Digging Permit, the Contractor shall carefully review the area to be excavated to determine the location of existing utilities and other obstructions. The Contractor will review available drawings and will conduct a visual inspection of the site. The Contractor will utilize underground utility detecting devices such as metal and cable detectors to determine the location of existing utilities. All utility lines found shall be clearly flagged or marked and the location of the utility

shall be shown on the drawing to be submitted with the request for Digging Permit.

1.6.4 Existing Underground Utilities

The Contractor shall exercise utmost care in researching locations of existing utilities and reducing damage to existing utilities. Any utilities damaged by the Contractor shall be promptly repaired by the Contractor. The Contracting Officer will review and approve any proposed repairs. Any damage to existing utilities will be immediately reported to the Contracting Officer and the Base Commander.

1.7 CONNECTIONS TO EXISTING UTILITIES

1.7.1 General

Any outage involving disruption of electrical service beyond the site area shall be requested in writing at least ten (10) days in advance of the date requested for the commencement of the outage. The Contractor shall provide a request, detailing the type of outage needed (water, sewer, electrical, steam, etc.), the time needed to perform the work, the reason for the outage, and the known affected facilities. The Contracting Officer shall be contacted prior to the outage to confirm the time and date. If the Contractor fails to initiate work at the approved time, the Contracting Officer may cancel the approved outage and may direct the Contractor to resubmit a new request. No part of the time lost due to the Contractors failure to properly schedule an outage shall be made the subject of claim for extension of time or for excess costs or damages by the Contractor.

1.7.1.1 Performance of Work During Non-Standard Hours

To minimize outage impact to the mission of the installation, all outages shall be scheduled on weekends or from 2100 – 0530 hours on duty days and/or as directed by Contracting Officer Representative (COR). The period proposed for performance of the outage shall include sufficient contingencies to preclude impact to the peak working hours 0530 – 1800 hours during the workweek.

1.7.1.2 Exterior Night Lighting

Exterior night lighting shall be provided in conformance with EM-385-1-1 entitled Safety and Health Requirements Manual.

1.7.2 Existing Underground Utilities

The Contractor is provided notice that existing utilities may be present in the construction area. The Contractor shall exercise the utmost care in researching locations of existing utility lines by implementing control measures to eliminate, or reduce to a level acceptable to the Contracting Officer, the chance of damaging or destroying existing utilities.

1.7.2.1 Use of Underground Utility Detecting Device

Prior to any excavation, a metal and/or cable-detecting device shall be used along the route of the excavation. All underground utilities discovered by this method will be flagged a minimum distance of one-half (1/2) meter on each side of the location.

1.7.2.2 Hand Excavation

Hand excavation methods and special supervisory care shall be used between any flagged markers, in areas of known or suspected hazards, and in areas known or suspected to have multiple and/or concentrated utility lines or connections.

1.7.3 Repair of Damaged Utilities

The Contractor shall be responsible to repair any utilities damaged by him. The method of repair and schedule for performance of the repair shall be coordinated with, and subject to the approval of, the Contracting Officer. The repair work and any temporary work required to keep the system operational while repairs are being completed, shall be performed at no cost to the Government.

1.8 WATER

The Contractor shall install and maintain necessary supply connections and piping for same, but only at such locations and in such manner as may be approved by the Contracting Officer. Water required for final testing, adjusting and balancing of HVAC systems will be furnished by the Government. Before final acceptance of systems, or facilities, all temporary connections and piping installed by the Contractor shall be removed at his expense in a manner satisfactory to the Contracting Officer.

1.9 NOT USED

1.10 ELECTRICITY (CONTRACTOR PROVIDED)

Electrical service is not available for use under this contract; therefore all electric current required by the Contractor shall be the responsibility of the Contractor, furnished at his own expense. The Contractor shall provide diesel generators to meet his demand requirements. The means of doing so, such as by temporary distribution systems, shall be the responsibility of the Contractor. All temporary connections for electricity shall be subject to the approval of the Contracting Officer and shall comply with Corps of Engineers manual EM 385-1-1 entitled Safety and Health Requirements Manual. All temporary lines shall be furnished, installed, connected and maintained by the Contractor in a workmanlike manner satisfactory to the Contracting Officer. Before final acceptance of systems, or facilities, all temporary connections installed by the Contractor shall be removed at his expense in a manner satisfactory to the Contracting Officer.

1.11 WORK OUTSIDE REGULAR HOURS

If the Contractor desires to carry on work outside regular base duty hours, or on holidays, including the following U.S. holidays: New Year's Day, Martin Luther King Jr Birthday, President’s Day, Memorial Day, Independence Day, Labor Day, Columbus Day, Veteran's Day, Thanksgiving and Christmas. the Contractor shall submit an application to the Contracting Officer. Due to reliance upon local national laborers and time off due to local observances, there may be disruptions. Potentials dates are the following local observances: National Islamic Holiday of Ashura, Ramadan (actual date varies – check with local authorities). The Contractor shall allow ample time to enable satisfactory arrangements to be made by the Government for inspecting the work in progress. At night, exterior lighting shall be provided in conformance with EM-385-1-1 entitled "Safety and Health Requirements Manual".

1.12 SCHEDULING OF WORK IN EXISTING FACILITIES

As soon as practicable, but in any event not later than thirty (30) calendar days after award of this contract, the Contractor shall meet in conference with the Contracting Officer, or his duly authorized representatives, to discuss and develop mutual understanding relative to the scheduling of work in and access to the existing facilities where work has to be performed under this contract, so that the Contractor's proposed construction schedule is coordinated with the operating and security requirements of the installation.

1.13 SPECIAL FACILITIES AND SERVICES TO BE FURNISHED BY THE CONTRACTOR

1.13.1 Field Office Facility: the contractor shall provide a temporary field office facility for use by government employees for performance of their QA duties. The office must have climate

control, windows, and other appurtenences to make a complete and usable facility for US Govt employees. This facility may be attached to a contractor facility but must have a separate entrance and be secured.

1.13.2 Services for the Office Facilities: power, climate control and telephone is required for the temporary government office facility and is considered part of the contract and responsibility of the contractor.

1.15 CERTIFICATES OF COMPLIANCE

Any certificates required for demonstrating proof of compliance of materials with specification requirements shall be executed in accordance with Section 01335 SUBMITTAL PROCEDURES FOR DESIGN/BUILD. Each certificate shall be signed by an official authorized to certify in behalf of the manufacturing company involved and shall contain the name and address of the Contractor, the project name and location, description and the quantity of the items involved, and date or dates of shipment or delivery to which the certificates apply. Copies of laboratory test reports submitted with certificates shall contain the name and address of the testing laboratory and the date or dates of the tests to which the report applies. Certification shall not be construed as relieving the Contractor from furnishing satisfactory material.

1.16 ACCIDENT PREVENTION

The Contractor shall comply with all applicable Host Country laws and with such additional measures as the Contracting Officer may find necessary in accordance with CONTRACT CLAUSE 52.236-13 entitled ACCIDENT PREVENTION (NOV1991)-ALTERNATE 1 (APR 1984). Applicable provisions of the Corps of Engineers manual entitled Safety and Health Requirements Manual EM 385-1-1 will be applied to all work under this contract. The referenced manual may be obtained from the Contracting Officer at the jobsite or from the Afghanistan Engineer District at Kabul, Afghanistan.

1.16.1 Accident Prevention Program

Within fifteen (15) days after award of this contract, and at least ten (10) days prior to the accident prevention pre-work conference, four (4) copies of the Accident Prevention Plan required by the CONTRACT CLAUSE 52.236-13 entitled ACCIDENT PREVENTION (NOV 1991)- ALTERNATE I shall be submitted for review by the Contracting Officer. The Contractor shall not commence physical work at the site until the Accident Prevention Plan (APP) has been reviewed and accepted by the Contracting Officer. The APP shall meet the requirements listed in Appendix "A" of EM385-1-1. The program shall include the following: TAC Form 61 " Accident Prevention Program Hazard Analysis (Activity Hazard Analysis)" fully completed and signed by an executive officer of the company in block No. 13. The Activity Hazard Analysis is a method in which those hazards likely to cause a serious injury or fatality are analyzed for each phase of operations. Corrective action is planned in advance, which will eliminate the hazards. An analysis is required for each new phase of work. On large or complex jobs the first phase may be presented in detail with the submittal of the Accident Prevention Plan rather than presenting the complete analysis. If the plan is to be presented in phases, a proposed outline for future phases must be submitted as a part of the initial Accident Prevention Plan submittal. Accident Prevention Plans will be reviewed for timeliness and adequacy at least monthly with a signature sheet signed and dated documenting that these reviews took place. Copy of company policy statement of Accident Prevention and any other guidance as required by EM 385-1-1, Appendix A.

1.16.2 Ground Fault Circuit Interrupter (GFCI) Requirement – Overseas Construction

The Corps of Engineers Health and Safety Manual, EM 385-1-1, section 11.C.05.a. states: "The GFCI device shall be calibrated to trip within the threshold values of 5 ma +/- 1 ma as specified in Underwriters Laboratory (UL) Standard 943." A variance from USACE has been granted allowing 10 ma, in lieu of 5 ma, for overseas activities that use 220 Volts (V)/50 hertz (Hz) electrical power.

1.16.3 Temporary Power - Electrical Distribution Boxes

EM 385-1-1 section 11.A.01.a. states, "All electrical wiring and equipment shall be a type listed by a nationally recognized testing laboratory for the specific application for which it is to be used." This includes temporary electrical distribution boxes. Locally manufactured electrical boxes will not be allowed. Only manufactured electrical distribution boxes that meet the European CE requirements, with 10 ma CE type GFCIs installed shall be allowed.

Contractors shall:

a. Make no modifications that might void any CE or manufacturer certification.

b. Test the installed systems to demonstrate that they operate properly and provide the 10 ma earth leakage protection.

c. Ensure GFCIs will have an integral push-to-test function. The testing shall be performed on a regular basis.

d. Check that proper grounding is checked regularly and flexible cords, connectors, and sockets inspected before each use.

1.17 HAZARDOUS MATERIALS

Should the Contractor encounter asbestos or other hazardous materials, during the construction period of this contract, he shall immediately stop all work activities in the area where the hazardous material is discovered. The Contractor shall then notify the Contracting Officer; identify the area of danger; and not proceed with work in that area until given approval from the Contracting Officer to continue work activities. Hazardous material is considered to be asbestos, explosive devices, toxic waste, or material hazardous to health and safety. The Contractor shall secure the area from daily traffic until it is safe to resume normal activities.

1.18 SPARE PARTS

1.18.1 General

The requirements of this clause are in addition to any requirements for the provision of specific spare parts to be provided by the Contractor included in Technical Provisions. The Contractor shall furnish spare parts as directed by the Contracting Officer under the provisions of this clause for all equipment for which O&M data is to be provided under Clause OPERATION AND MAINTENANCE (O&M) DATA of this contract. The term "spare parts" as used herein shall include spare parts, special tools and test equipment.

1.18.2 Selection of Spare Parts to be Furnished

The Contractor shall provide master parts lists, recommended spare parts lists and lists of special tools and test equipment as a part of the equipment O&M data required by Clause OPERATION AND MAINTENANCE (O&M) DATA. The master parts list shall include the supplier's price for each part. After review of the lists, the Contracting Officer will select spare parts and furnish written direction to the Contractor indicating quantities and types of spare parts to be furnished by the Contractor. Written directions for spare parts orders may be provided on an incremental basis as reviews of O&M data submitted by the Contractor are completed but will not necessarily be issued in the sequence in which the Contractor submitted the equipment O&M data.

1.18.3 Procurement and Delivery of Spare Parts

The Contractor shall procure and be responsible for delivery, receipt, handling, placing in storage, inventory, and turnover to the Contracting Officer all spare parts selected by the Contracting Officer. In addition to the recommended spare parts list required in paragraph SELECTION OF SPARE PARTS TO BE FURNISHED above, the Contractor is responsible to have one (1) year supply of manufacturer's recommended spare parts on site ready to turn over to the Contracting Officer at the time of acceptance of the facility.

1.18.3.1 Shipment and Delivery

The Contractor shall be responsible for the shipment and delivery of spare parts to the location on or near the site in Afghanistan as selected by the Contracting Officer. The Contractor shall provide all manpower and equipment required to receive and place into designated storage areas all spare parts purchased under this clause. The Contractor shall give the Contracting Officer thirty (30) calendar days notice of arrival at the site of the first shipment.

1.18.3.2 Turnover of Spare Parts

The Contractor shall notify the Contracting Officer seventy-two (72) hours prior to delivery of spare parts to the designated storage area. The Contractor and the Contracting Officer will perform a joint inventory of the spare parts and the spare parts will be turned over to the Contracting Officer. Spare parts purchased under this clause shall not be used by the Contractor.

1.18.3.3 Parts and Package Identification

Prior to shipment from point of purchase, each spare part shall be tagged or otherwise marked or labeled. Such labeling may be placed or affixed to the container, box or packaging in which spare parts are located when it is not feasible to place or affix such labeling directly on each spare part. Tags or labels shall include, but not necessarily be limited to; part number, description, parent equipment name and number location, project and/or other data as directed by the Contracting Officer.

1.18.3.4 Preservation and Packaging Instruction

a. Items ordered under this contract shall be preserved and packed for a minimum of three (3) years shelf life storage. All items shall be individually packaged except when the manufacturer specifies that the items are to be used in sets. Appropriate identification labels must be affixed to the items protective box or package. After the spare parts are packaged, the manufacturer shall weigh the spare parts and packaging and place the weight and size of the packaged container on the label with other information as outlined herein. Each item, not normally identified with manufacturer's name and part number, shall have an appropriate label affixed to it with manufacturer's name and part number.

b. Machined spare parts shall be lubricated or coated in order to withstand extensive periods of storage in a highly corrosive atmosphere.

c. Large items (greater than 22.7 kg (50 lbs.), or larger than 0.03 CM (one cubic foot) shall be packaged in waterproof wooden boxes and properly braced. Cushioning shall be used to prevent damage to the item and to the packaging material.

d. Solid state components, such as diodes, transistors, integrated circuits or equipment consisting of such parts that can be damaged as a result of static electricity and other stray electro-magnetic fields shall be packaged in heat-sealed, aluminum foil, laminated, flexible packages.

e. All other spare parts shall be packaged in heat sealed plastic bags or wrap. Delicate and more fragile items such as test equipment shall be cushioned or wrapped with transparent bubble wrap material prior to being inserted into the plastic package.

1.18.4 Warranty

All spare parts provided by the Contractor under this clause are subject to the general warranty clauses of this contract.

1.18.5 Payments for Spare Parts

Payments for spare parts ordered under the paragraph entitled "Selection of Spare Parts To Be Furnished" will be made under the work item of the Work Breakdown Sheet entitled "Spare Parts". Payments for spare parts specifically required elsewhere in this contract shall be considered as part of those equipment costs and shall be included in other payment items as appropriate. Payments for spare parts ordered under this clause shall be based on the invoice price (FOB supplier) plus certified invoice price of surface shipment to the site in Afghanistan. The invoice price (FOB supplier) shall include the separately listed cost for preservation and packaging by the manufacturer as specified herein. The Contractor shall provide invoices and any additional backup, which may be required to demonstrate that the invoices presented represent the cost of spare parts, preservation and packaging, and cost of surface shipment to the site. Payment for handling, delivery, inventory, turnover, customs, overhead or profit shall not be paid or allowed under this Contract Provision, and shall be included in the cost for installation of this equipment under the other appropriate payment items of this contract. Price increases over prices furnished under paragraph SELECTION OF SPARE PARTS TO BE FURNISHED shall be fully substantiated. Payment for spare parts will be made after the spare parts have been accepted at the site by the Contracting Officer. If the total payments under the work item entitled "Spare Parts" does not reduce the balance of this work item to zero, the remaining balance will be deducted from the final contract amount. If orders exceed the work item entitled "Spare Parts", a modification for equitable adjustment will be issued in accordance with Contract Clause 52.243-4 entitled CHANGES. Payments for spare parts ordered under this clause shall constitute full payment for all cost of the spare parts and associated cost of preservation and packaging, and cost of surface shipment to the site. Other ancillary costs shall be included by the Contractor under the other appropriate work items of this contract and no additional cost except as provided herein will be allowed.

1.19 OPERATION AND MAINTENANCE (O&M) DATA

1.19.1 General

The requirements contained herein are in addition to all shop drawings submission requirements stated in other sections of the specifications. The Contractor shall include the provisions for all items required under this clause in all purchase orders and sub-contract agreements. Submittals required hereinafter will not relieve the Contractor of any responsibilities under the Warranty of Construction Provisions of this contract or under the various Guarantee Clauses of the Technical Provisions.

1.19.2 Submittals

The Contractor shall submit all items requiring submission of O&M data under this and other sections of these specifications in accordance with Section 01335 SUBMITTAL PROCEDURES FOR DESIGN/BUILD of the specifications.

1.19.3 Operation and Maintenance (O&M) Data

The Contractor shall furnish operation and maintenance manuals for all facilities constructed under this contract. The manuals shall be loose leaf, indexed and shall consist of manufacturer's brochures, manufacturer's operation and maintenance manuals, service and repair manuals, catalogs, service bulletins, instruction charts, diagrams, other information as necessary to support the operation and maintenance of the end items of equipment, assemblies and systems. Each type of facility (housing, barracks, mosque, etc.) shall be covered by a separate manual (or manuals) consisting of all data pertaining to the equipment and/or systems within that facility. Identical equipment within a single major

system shall require only one submittal of data. The Contractor shall furnish all O&M manuals to the Contracting Officer not less than thirty (30) calendar days prior to contract completion. Required number of submittals (number of sets) shall be as specified in Section 01335 SUBMITTAL PROCEDURES FOR DESIGN/BUILD.

1.19.4 Recommended Spare Parts List

The Contractor shall furnish a recommended spare parts list containing equipment manufacturers' recommendations for five (5) years; two (2) years and one (1) year spare parts stock levels in Afghanistan. Current unit price and effective date, lead time, shelf life for each individual part, and total cost of all recommended parts shall be furnished.

1.19.5 Supplemental Submittals of Data

After initial submittal of O&M manuals and until final acceptance of all equipment, the Contractor shall prepare and deliver to the Contracting Officer supplemental technical data as previously described for all changes, modifications, revisions and substitutions to equipment and components. For equipment or systems introduced into the contract under change order, or modified by change order, supplemental data shall be furnished within forty-five (45) calendar days after issuance of the change order. The supplemental data furnished shall be properly prepared and identified for insertion into the O&M manuals.

1.19.6 Framed Instructions for Systems

Approved wiring and control diagrams showing the complete layout of the entire system, including equipment, piping, valves and control sequence, framed under glass or in approved laminated plastic, shall be posted, where applicable, in all mechanical equipment rooms. In addition, detailed operating instructions explaining safe starting and stopping procedures for all systems shall be prepared in typed form along with the inspections required to insure normal safe operations. The instructions shall be framed as specified above for the wiring and control diagrams and posted beside the diagram. Proposed diagrams, instructions, and other sheets shall be submitted for approval prior to posting. Operating instructions shall be posted before acceptance testing of the systems and verified during acceptance testing.

1.19.7 Additional Submittals/Re-submittals

The Contracting Officer reserves the right to determine whether the above specified information, as furnished by the Contractor, is adequate and complete and to require such additional submittals by the Contractor as necessary to insure that adequate information has been furnished to provide the satisfactory operation and maintenance of the various items of equipment and to fulfill the intent of the specifications. Additional submittals or resubmittals supplementing incorrect or incomplete data shall be made within thirty (30) calendar days after receiving notice by the Contracting Officer. All costs arising from these resubmissions shall be borne by the Contractor.

1.20 INSTRUCTIONS AND TRAINING FOR OPERATION AND MAINTENANCE

1.20.1 General

The Contractor shall be responsible for the instruction and training of operating and maintenance personnel as specified below and in the Technical Provisions of the specifications. Unless otherwise indicated in the Technical Provisions, operating and maintenance instructions shall be given for a minimum period as follows:

Title	Duration of Training
Mechanical Systems	10 Days

Electrical Systems	10 Days

1.20.2 Operation and Maintenance Training

The Contractor shall provide competent instructors for training of personnel designated by the Contracting Officer to operate mechanical and electrical building systems and equipment, perform the required preventive maintenance to minimize breakdown, and to perform necessary repairs when malfunction or breakdown of equipment occurs. Such training shall consist of classroom and on-the-equipment training for the period specified, which shall be completed prior to acceptance of a system or equipment, as applicable. The instructor(s) shall have no other duties during the period of training. Classroom instruction shall not exceed fifty percent (50%) of the total training time, with the balance devoted to on-the-equipment demonstration and familiarization. Emphasis will be given to both electrical and mechanical features, in accordance with approved training plans.

1.20.3 Arrangements

The training shall be for not less than the periods of time specified, five (5) days per week, and eight (8) hours per day, subject to review and approval by the Contracting Officer. Each individual training session shall be presented one time only, shall be video taped in a television system compatible with the local area, and be scheduled in a manner acceptable to the Contracting Officer. At the completion of training, the videotapes shall become the property of the Government. In addition to the Contractor's requirements to video tape each training section, the Government reserves the right to record, in any manner, the subject training material, or training sessions given by the Contractor, without additional cost to the Government.

Recordings obtained will be used in future training by the Government. The operating and maintenance manual data, as specified to be furnished in these Special Clauses, shall be used as the base material for training.

1.20.4 Scheduling

The Contractor shall contact the Contracting Officer for the purpose of preliminary planning, scheduling, and coordination of training, to maximize effectiveness of the training program for available operating and maintenance personnel. The Contractor shall initiate and make arrangements for such contact within thirty (30) calendar days after receipt of notification of award of contract; and shall include all significant times in scheduling and completing training in his PROJECT SCHEDULE. The Contractor shall provide a draft outline of training outline in sufficient detail to provide a broad indication of the type of scope of training to be given. It shall include but not be limited to; (a) a list of subjects to be presented; (b) estimated amounts of classroom and on-the-equipment instruction for each subject; (c) a list of minimum qualifications for instructors; and (d) discussions concerning the types and amounts of visual aids, reference materials, tools and test equipment, mock-up and other training materials that will be employed during training.

1.20.5 Preliminary Plan

The Contractor shall submit seven (7) copies of an outline of his proposed training plan to the Contracting Officer for review and approval not later than 60 calendar days after award of this contract. The plan will be reviewed and coordinated with the content of the O&M manuals.

1.20.6 Plan

The Contractor shall submit seven (7) copies of his proposed training plan to the Contracting Officer for approval not later than ninety (90) calendar days prior to start of any training. The plan shall include the following; (a) a weekly outline showing overall form and design of training presentation; (b) a day-by-day schedule showing time intervals, the major and subordinate subjects to be covered in each, the name of

the instructor(s) and qualification summary of each, and identification of related handouts; (c) summary of the number of hours of classroom and on-the-equipment training; (d) a list of reference materials to be provided by the Contractor to the trainees; and (e) a list and description of the training materials to be used, such as text, visual aids, mock-up, tools, etc. The Contractor shall be responsible for furnishing all training materials except the following: The Government will provide space, chairs, and tables for classroom training, and three (3) sets of the five (5) sets of O&M Manuals required by the Contractor per Section 01335 SUBMITTAL PROCEDURES FOR DESIGN/BUILD of the specifications. Provision of these manuals is solely for reference purposes, and in no way relieves the Contractor from providing all instruction and materials necessary for training personnel designated by the Government. All costs for resubmission of training plans, training materials, etc., as requested by the Contracting Officer shall be borne by the Contractor. Resubmittals shall be made within twenty (20) days of notice from the Contracting Officer.

1.20.7 Attendance Roster/TAC Form 356

The Contractor shall develop an attendance roster or a similar document indicating each student's attendance, prior to the start of each class, subject and/or topic. This includes both "Hands-On" and classroom training. It is strongly recommended that each student trained be required to sign this document at the beginning of each class day for each and every class, subject and/or topic taught on that day. The Contractor's failure to have student attendance verified in writing may be cause for the Government to order the Contractor to repeat schooling where evidence of attendance cannot be verified. No part of the time lost due to such repeat instruction shall be made the subject of claim for extension of time or for excess costs or damage by the Contractor. Within ten (10) working days after completion of Operation and Maintenance Training conducted in accordance with this clause and/or applicable Technical Provision section, the Contractor shall complete and submit TAC Form 356 "Operation and Maintenance Training Validation Certificate". The attendance roster shall be included as an attachment to TAC Form 356.

1.21 CONTRACTOR FURNISHED EQUIPMENT LISTS

The Contractor shall furnish a list of all items, other than integral construction type items, furnished under the contract. Items such as furniture, drapes, rugs, vehicles, office machines, appliances, etc., shall fall under this category. The Contractor's list shall describe the item; give the unit price and total quantities of each. Model and serial numbers for equipment shall be provided when applicable. The Contractor shall keep an up-to-date register of all covered items and make this information available to the Contracting Officer at all times. Prior to acceptance, the Contractor shall submit the complete register to the Contracting Officer.

1.22 TIME EXTENSIONS

1.22.1 General

This provision specifies the procedure for determination of time extensions for unusually severe weather in accordance with the Contract Clause 52.249-10 entitled DEFAULT (FIXED-PRICE CONSTRUCTION) APR 1984. The listing below defines the anticipated monthly unusually severe weather for the contract period and is based on National Oceanic and Atmospheric Administration (NOAA) or similar data for the geographic location of the project. The schedule of anticipated unusually severe weather will constitute the baseline for determining monthly weather time evaluations. Upon award of this contract and continuing throughout the contract each month, actual unusually severe weather days will be recorded on a calendar day basis (including weekends and holidays) and compared to the monthly anticipated unusually severe weather in the schedule below. The term "actual unusually severe weather days" shall include days actually impacted by unusually severe weather. The Contractor's schedule must reflect the anticipated unusually severe weather days on all weather dependent activities.

MONTHLY ANTICIPATED UNUSUALLY SEVERE WEATHER CALENDAR DAYS

January	4 Days
February	2 Days
March	2 Days
April thru December	0 Days

1.22.2 Time Extensions

The number of actual unusually severe weather days shall be calculated chronologically from the first to the last day in each month. Unusually severe weather days must prevent work for fifty percent (50%) or more of the Contractor's workday and delay work critical to the timely completion of the project. If the number of actual unusually severe weather days exceeds the number of days anticipated in the paragraph above, the Contracting Officer will determine whether the Contractor is entitled to a time extension. The Contracting Officer will convert any qualifying delays to calendar days and issue a modification in accordance with the Contract Clause 52.249-10 entitled DEFAULT (FIXED-PRICE CONSTRUCTION) APR 1984.

1.22.3 Other Delays

Construction delays due to full or partial base closures due to incidents such as demonstrations, civil unrest and outright attacks will be examined on an individual basis for consideration of time extensions.

1.23 STANDARDIZATION

Where two or more items of the same type or class of product, system or equipment furnished in this project are required, the units shall be products of the same manufacturer and shall be interchangeable when of the same size, capacity, performance characteristics, and rating. The only exception to this requirement is where the items are interchangeable due to conformance with industry standards (valves, fittings, etc.); they need not be by the same manufacturer. This requirement applies to all manufactured items in the project that normally require repair or replacement during the life of the equipment.

1.24 COMPLIANCE WITH HOST COUNTRY RULES AND CUSTOMS

The laws of Host Country may prohibit access to certain areas of the country that are under military control. The Contractor shall furnish the Contracting Officer the names of personnel, type, and amounts of equipment, dates and length of time required at the site, and the purpose of entering the host country. It is understood that areas to which rights of entry are provided by the Host Government are to be used only for work carried out under the contract and no destruction or damages shall be caused, except through normal usage, without concurrence of the Host Government.

1.24.1 Contractor's Responsibilities

The following items are the sole responsibility of the Contractor to investigate, estimate as to cost, and assume the risk, as normally encountered by Contractors. The Contractor shall be responsible for determining the effect of the following on his own cost of performance of the contract and for including sufficient amount in the contract price:

a. Official language and type of accounts required to satisfy the officials of the Local Government.

b. Entry and exit visas, residence permits, and residence laws applicable to aliens. This includes any special requirements of the Host Government, including those required by local Labor Offices, which the Contractor may have to fulfill before an application for a regular block of visas will be accepted.

c. Passports, health and immunization certificates, and quarantine clearance.

d. Compliance with local labor and insurance laws, including payment of employer's share of contribution, collecting balance from employee and paying into insurance funds.

e. Strikes, demonstrations and work stoppage.

f. Collection through withholding and payment to local Government, of any Host Country income tax on employees subject to tax.

g. Arranging to perform work in the Host Country, to import personnel, to employ non-indigenous labor, to receive payments and to remove such funds from the country.

h. Operating under local laws, practices, customs and controls, and with local unions, in connection with hiring and firing, mandatory wage scales, vacation pay, severance pay, overtime, holiday pay, 7th day of rest, legal notice or pay in lieu thereof for dismissal of employees, slowdown and curtailed schedules during religious holidays and ratio of local labor employed in comparison to others.

i. Possibility of claims in local bureaus, litigation in local courts, or attachment of local bank accounts.

j. Compliance with workmen's compensation laws and contributions into funds. Provisions of necessary medical service for Contractor employees.

k. Special license required by the local Government for setting up and operating any manufacturing plant in the Host Country, e.g. concrete batching, precast concrete, concrete blocks, etc.

l. Sales within the host country of Contractor-owned materials, and equipment.

m. Special licenses for physicians, mechanics, tradesmen, drivers, etc.

n. Identification and/or registration with local police of imported personnel.

o. Stamp tax on documents, payments and payrolls.

p. Base passes for permanent staff, day laborers, motor vehicles, etc.

q. Compliance with all customs and import rules, regulations and restrictions, including, but not limited to, local purchase requirements.

1.25.1 Employee Identification

The Contractor shall be responsible for furnishing to each employee and for requiring each employee engaged on the work, to display identification as approved and directed by the Contracting Officer. Prescribed identification shall immediately be delivered to the Contracting Officer for cancellation upon release of any employee. When required, the Contractor shall obtain and provide fingerprints of persons employed on the project. Contractor and subcontractor personnel shall wear identifying markings on hard hats clearly identifying the company for whom the employee works.

1.25.1.1 Preparation of Identification Badges

The Contractor shall be required to prepare a written application inclusive color photographs and provide all materials and labor necessary to prepare an identification badge, laminated in plastic, containing the employee's name, badge number, color photo, height and weight, the name of the Contractor's organization and for requiring each employee engaged on the work to display this identification as directed by the Contracting Officer. The Contractor shall submit each application and draft badge through the Contracting Officer to the Base Security Office. A minimum of thirty-five workdays shall be allowed for Government review and certification of badges. The Base Security Office will certify each

draft badge by signature, stamp, seal or any combination thereof. Upon certification by the Base Security Office, the badges will be returned to the Contractor for final preparation, lamination, and issuance. Badges shall not be taken out of country during periods of travel or absence. During such periods, the Contractor may be permitted to issue temporary identification badges.

1.25.1.2 Employee Background and Historical Information

The Contractor shall be required to prepare and maintain personal background and historical information forms on each employee. These forms may be reviewed by the Base Security Office. The required information shall include but not necessarily be limited to the following:

a. Full name.
b. Place and date of birth.
c. Three (3) current color photographs.
d. Copy of Citizenship/Nationality identification.
e. Copy of Passport.
f. Copy of drivers license.
g. Police Background Check.
h. Work History.
i. Personal background information.
j. Copy of Work Permit and/or Visa.
k. Permanent home of record and in-country address.
l. Other information mandated by local law, the Base Security Regulations or that may be required to coordinate and process the necessary documentation with the government offices responsible for the approval.
n. Registration, insurance company, policy number and expiration date for each vehicle.

1.25.2 Identification of Contractor Vehicles

The Contractor shall be responsible for requiring each vehicle engaged in the work to display permanent vehicular identification as approved and directed by the Contracting Officer. If acceptable to the Base Security Office and approved by the Contracting Officer, the Contractor may institute a system of non-permanent temporary identification for one-time delivery and transit vehicles. Each Contractor vehicle, machine, piece of equipment, or towed trailers, shall show the Contractor's name such that it is clearly visible on both front doors of the vehicle and both sides of a towed trailer. A valid license plate shall be displayed at all times. Contractor vehicles operated on Government property shall be maintained in a good state of repair, shall be insured, and shall be registered in accordance with Afghan Law.

1.25.3 Security Plan

The Contractor shall submit to the Contracting Officer, within ten (10) calendar days after award of this contract, his proposed personnel and vehicular access plan. This plan shall cover all elements for issuance of the access passes, safeguarding of passes not issued, construction security operations, lost passes, temporary vehicle passes, and collection of passes for employee's and vehicles on 1)- temporary absence; 2)- termination or release; and 3)- termination or completion of contract. The plan shall address in detail the contractors proposed procedures, and organization necessary to produce and maintain effective security within the contract limits twenty-four (24) hours a day seven (7) days a week.

1.26 RADIO TRANSMITTER RESTRICTIONS

To preclude accidental actuation of sensitive electronic equipment, the Contractor shall not use radio-transmitting equipment without prior approval of the Contracting Officer.

1.28 PUBLIC RELEASE OF INFORMATION

1.28.1 Prohibition

There shall be no public release of information or photographs concerning any aspect of the materials or services relating to this bid, contract, purchase order, or other documents resulting there from without the prior written approval of the Contracting Officer.

1.28.2 Subcontract and Purchase Orders

The Contractor agrees to insert the substance of this clause in all purchase orders and subcontract agreements issued under this contract.

1.29 ATTACHMENTS

TAC FORM 61 - Accident Prevention Program Hazard Analysis

TAC FORM 356 - Operation and Maintenance Training Validation Certificate

PART 2 LOCAL CLAUSES

2.1 APPLICATION OF US CRIMINAL JURISDICTION

Reference DODI 5525.11. The contractor is directed to provide all of its personnel working under this contract, and to require all of its subcontractors to provide their personnel, with written notification that - with the exception of nationals of Afghanistan and those ordinarily resident in Afghanistan - contractor and subcontractor personnel, and the dependents of contractor and subcontractor personnel who are residing with such personnel, may be subject to US criminal jurisdiction as provided for in the Military Extraterritorial Jurisdiction Act, 18 USC 3261-3267; see Section 3267(1)(A)(iii)(I) and (2)(A)(iii). A copy of the notice ***shall be furnished to the contracting officer upon award of the contract***, along with a certification by an authorized company representative attesting to the provision of the notification to contractor personnel.

2.2 ATTACKS FROM HOSTILE ENTITIES

This contract is firm fixed-price. Costs incurred in the performance of project execution that arise from the attacks of hostile entities, such as costs arising from damage to or destruction of contractor equipment and facilities, and damage to or destruction of the project prior to Government acceptance, are the sole responsibility of the contractor. The Government makes no guarantee to provide the contractor with security, and bears no obligation to reimburse the contractor for costs arising from the attacks of hostile entities. When appropriate, the Contracting Officer may provide the contractor with an equitable adjustment with respect to time – but not cost – in accordance with clause 52.249-10; see 52.249-10(b)(1)(i) and (2).

2.3 INSTALLATION ACCESS AND BADGING

This contract is firm fixed-price. It is the responsibility of the contractor to be knowledgeable of and to abide by any and all applicable installation access procedures and requirements, to include any and all badging procedures and requirements, that may be necessary for contractor access to the project site. Such procedures and requirements may change over the course of contract performance; it is the responsibility of the contractor to plan accordingly in order to meet its existing obligations under this contract. The US Army Corps of Engineers, Afghanistan Engineer District, neither controls nor is responsible for any such installation access procedures, requirements or changes thereto.

2.4 CUSTOMS CLEARANCE

Reference clauses 52.229-6 and 52.225-13. This contract is firm fixed-price. It is the responsibility of the contractor to be knowledgeable of and to abide by any and all applicable customs clearance procedures and requirements that may be necessary for the transportation of supplies and equipment into Afghanistan. Such procedures and requirements may change over the course of contract performance; it is the responsibility of the contractor to plan accordingly in order to meet its existing obligations under this contract. The US Army Corps of Engineers, Afghanistan Engineer District, neither controls nor is responsible for any such customs clearance procedures, requirements or changes thereto.

2.5 TRAVEL WARNINGS

The contractor shall provide all personnel working under this contract, and shall require subcontractors to provide their personnel, with a written notification advising such personnel to be aware of US State Department Travel Warnings with respect to Afghanistan, available at http://travel.state.gov, in the event they wish to consider bringing their dependants into Afghanistan. A copy of the notice ***shall be furnished to the contracting officer upon award of the contract***, along with a certification by an authorized company representative attesting to the provision of the notification to contractor personnel. At no time, subject to the written approval of the contracting officer, may the contractor allow such dependants, or any other unauthorized individuals, to be present on the project site grounds, whether in transit or otherwise.

2.6 DRUG-FREE WORKFORCE

Documentation of the contractor's drug-free workforce program as required by clause 252.223-7004(b) ***shall be furnished to the contracting officer upon award of the contract***.

2.7 COMBATING TRAFFICKING IN PERSONS, COMMERCIAL SEX ACTS, FORCED LABOR

A copy of the employee notification statement as required by clause 252.222-7006(d) ***shall be furnished to the contracting officer upon award of the contract***, along with a certification by an authorized company representative attesting to the provision of the notification to contractor personnel.

2.8 AGENT'S FEE AND COMMISSION

The contractor certifies that the contract price (including any subcontracts awarded hereunder) does not include any direct or indirect costs of sales commissions or fees for contractor sales representatives for the solicitation or promotion or otherwise to secure the conclusion of the sale of any of the supplies or services called for by this contract to the Government of Afghanistan.

-- End of Section --

SECTION 01312

QUALITY CONTROL SYSTEM (QCS)

PART 1: GENERAL

1.1 GENERAL

The Government will use the Resident Management System for Windows (RMS) to assist in its

monitoring and administration of this contract. The Contractor shall use the Government-furnished Construction Contractor Module of RMS, referred to as QCS, to record, maintain, and submit various information throughout the contract period. The Contractor module, user manuals, updates, and training information can be downloaded from the RMS web site: the Contractor can obtain the current address from the Government. This joint Government-Contractor use of RMS and QCS will facilitate electronic exchange of information and overall management of the contract. QCS provides the means for the Contractor to input, track, and electronically share information with the Government in the following areas:

Administration
Finances
Quality Control
Submittal Monitoring
Scheduling
Import/Export of Data

1.1.1 Correspondence and Electronic Communications

For ease and speed of communications, both Government and Contractor will, to the maximum extent feasible, exchange correspondence and other documents in electronic format. Correspondence, pay requests and other documents comprising the official contract record shall also be provided in paper format, with signatures and dates where necessary. Paper documents will govern, in the event of discrepancy with the electronic version.

1.1.2 Other Factors

Particular attention is directed to specifications “SUBMITTAL PROCEDURES”, “CONTRACTOR QUALITY CONTROL”, "PROJECT SCHEDULE", and Contract Clause, "Payments", which have a direct relationship to the reporting to be accomplished through QCS. Also, there is no separate payment for establishing and maintaining the QCS database; all costs associated therewith shall be included in the contract pricing for the work.

1.2 QCS SOFTWARE

QCS is a Windows-based program that can be run on a stand-alone personal computer or on a network. Prior to the Pre-Construction Conference, the Contractor shall be responsible to download, install and use the latest version of the QCS software from the Government's RMS Internet Website. Any program updates of QCS will be made available to the Contractor via the Government RMS Website as they become available. It shall be the responsibility of the contractor to maintain the QCS software and install updates as they become available.

1.3 SYSTEM REQUIREMENTS

The following listed hardware and software is the minimum system configuration that the Contractor shall have to run QCS. No separate payment shall be made for updating or maintaining the necessary hardware configurations necessary to run QCS:

Hardware

IBM-compatible PC with 1000 MHz Pentium or higher processor
256+ MB RAM for workstation / 512+ MB RAM for server
1 GB hard drive disk space for sole use by the QCS system
Digital Video Disk (DVD)-Compact Disk (CD) Reader-Writer (RW/ROM)
Monitor with a resolution of AT LEAST 1024x768, 16bit colors
Mouse or other pointing device
Windows compatible printer. (Laser printer must have 4 MB+ of RAM)
Connection to the Internet, minimum 56k BPS

Software

MS Windows 2000 or higher
QAS-Word Processing software: MS Word 2000 or newer
Internet browser supporting HTML 4.0 or higher
Electronic mail (E-mail) MAPI compatible
Virus protection software regularly upgraded with all issued manufacturer's updates

1.4 RELATED INFORMATION

1.4.1 QCS User Guide

After contract award, the Contractor shall download instructions for the installation and use of QCS from the Government RMS Internet Website; the Contractor can obtain the current address from the Government. In case of justifiable difficulties, the Government will provide the Contractor with a CD-

ROM containing these instructions.

1.4.2 Contractor Quality Control (CQC) Training

The use of QCS will be discussed with the Contractor's QC System Manager during the mandatory CQC Training class. The government will provide QCS training if requested by the contractor.

1.5 CONTRACT DATABASE

Prior to the pre-construction conference, the Government shall provide the Contractor with basic contract award data to use for QCS. The Government will provide data updates to the Contractor as needed, generally by files attached to E-mail or via CD-ROM. These updates will generally consist of submittal reviews, correspondence status, QA comments, and other administrative and QA data.

1.6 DATABASE MAINTENANCE

The Contractor shall establish, maintain, and update data for the contract in the QCS database throughout the duration of the contract. Data updates to the Government shall be submitted via either E-mail or electronic media with printed/file attachments, e.g., daily reports, schedule updates, payment requests. If permitted by the Contracting Officer. The QCS database typically shall include current data on the following items:

1.6.1 Administration

1.6.1.1 Contractor Information

The database shall contain the Contractor's name, address, telephone numbers, management staff, and other required items. Within 14 calendar days of receipt of QCS software from the Government, the Contractor shall deliver Contractor administrative data in electronic format via E-mail.

1.6.1.2 Subcontractor Information

The database shall contain the name, trade, address, phone numbers, and other required information for all subcontractors. A subcontractor must be listed separately for each trade to be performed. Each subcontractor/trade shall be assigned a unique Responsibility Code, provided in QCS. Within 14 calendar days of receipt of QCS software from the Government, the Contractor shall deliver subcontractor administrative data in electronic format via E-mail.

1.6.1.3 Correspondence

All Contractor correspondence to the Government shall be identified with a serial number. Correspondence initiated by the Contractor's site office shall be prefixed with "S". Letters initiated by the Contractor's home (main) office shall be prefixed with "H". Letters shall be numbered starting from 0001. (e.g., H-0001 or S-0001). The Government's letters to the Contractor will be prefixed with "C".

1.6.1.4 Equipment

The Contractor's QCS database shall contain a current list of equipment planned for use or being used on the jobsite, including the most recent and planned equipment inspection dates.

1.6.1.5 Management Reporting

QCS includes a number of reports that Contractor management can use to track the status of the

project. The value of these reports is reflective of the quality of the data input, and is maintained in the various sections of QCS. Among these reports are: Progress Payment Request worksheet, QA/QC comments, Submittal Register Status, Three-Phase Inspection checklists.

1.6.2 Finances

1.6.2.1 Pay Activity Data

The QCS database shall include a list of pay activities that the Contractor shall develop in conjunction with the construction schedule. The sum of all pay activities shall be equal to the total contract amount, including modifications. Pay activities shall be grouped by Contract Line Item Number (CLIN), and the sum of the activities shall equal the amount of each CLIN. The total of all CLINs equals the Contract Amount.

1.6.2.2 Payment Requests

All progress payment requests shall be prepared using QCS. The Contractor shall complete the payment request worksheet and include it with the payment request. The work completed under the contract, measured as percent or as specific quantities, shall be updated at least monthly. After the update, the Contractor shall generate a payment request report using QCS. A signed paper copy of the approved payment request is also required, which shall govern in the event of discrepancy with the electronic version.

1.6.3 Quality Control (QC)

QCS provides a means to track implementation of the 3-phase QC Control System, prepare daily reports, identify and track deficiencies, document progress of work, and support other contractor QC requirements. The Contractor shall maintain this data on a daily basis. Entered data will automatically output to the QCS generated daily report.

1.6.3.1 Daily Contractor Quality Control (CQC) Reports.

QCS includes the means to produce the Daily CQC Report. The Daily CQC Report generated by QCS shall be the Contractor's official report. Data from any supplemental reports by the Contractor shall be summarized and consolidated onto the QCS-generated Daily CQC Report. Daily CQC Reports shall be submitted as required by specification 01451 “CONTRACTOR QUALITY CONTROL”.

1.6.3.2 Deficiency Tracking.

The Contractor shall use QCS to track deficiencies. Deficiencies identified by the Contractor will be numerically tracked using QC punch list items. The Contractor shall maintain a current log of its QC punch list items in the QCS database. The Government will log the deficiencies it has identified using its QA punch list items. The Government's QA punch list items will be included in its export file to the Contractor. The Contractor shall regularly update the correction status of both QC and QA punch list items.

1.6.3.3 Three-Phase Control Meetings

The Contractor shall maintain scheduled and actual dates and times of preparatory and initial control meetings in QCS.

1.6.3.4 Accident/Safety Tracking.

The Government will issue safety comments, directions, or guidance whenever safety deficiencies are observed. The Government's safety comments will be included in its export file to the Contractor. The Contractor shall regularly update the correction status of the safety comments. In addition, the Contractor shall utilize QCS to advise the Government of any accidents occurring on the jobsite. This brief supplemental entry is not to be considered as a substitute for completion of mandatory reports.

1.6.3.5 Features of Work

The Contractor shall include a complete list of the features of work in the QCS database. A feature of work may be associated with multiple pay activities. However, each pay activity (see subparagraph "Pay Activity Data" of paragraph "Finances") will only be linked to a single feature of work.

1.6.3.6 QC Requirements

The Contractor shall develop and maintain a complete list of QC testing, transferred and installed property, and user training requirements in QCS. The Contractor shall update all data on these QC requirements as work progresses, and shall promptly provide this information to the Government via QCS.

1.6.4 Submittal Management

The Contractor shall maintain a complete list of all submittals, including completion of all data columns. Dates on which submittals are received and returned by the Government will be included in its export file to the Contractor. The Contractor shall use QCS to track and transmit all submittals. ENG Form 4025, submittal transmittal form, and the submittal register update, ENG Form 4288, shall be produced using QCS. RMS will be used to update, store and exchange submittal registers and transmittals, but will not be used for storage of actual submittals.

1.6.5 Schedule

The Contractor shall develop a construction schedule consisting of pay activities, in accordance with Specification Section Project Schedule. This schedule shall be input and maintained in the QCS database either manually or by using the Standard Data Exchange Format (SDEF). The updated schedule data shall be included with each pay request submitted by the Contractor.

1.6.6 Requests for Information (RFI)

The Contractor shall use the two-way RFI system contained in QCS for tracking all RFI’s generated during the contract. Hard copies of all RFI’s shall be provided to the government, and will govern in the event of a discrepancy between electronic and printed mediums.

1.6.7 Import/Export of Data

QCS includes the ability to export Contractor data to the Government and to import submittal register and other Government-provided data, and schedule data using SDEF.

1.7 IMPLEMENTATION

Contractor use of QCS as described in the preceding paragraphs is mandatory. The Contractor shall ensure that sufficient resources are available to maintain its QCS database, and to provide the Government with regular database updates. QCS shall be an integral part of the Contractor's management of quality control.

1.8 DATA SUBMISSION VIA COMPUTER DISKETTE OR CD-ROM

The Government-preferred method for Contractor's submission of updates, payment requests, correspondence and other data is by E-mail with file attachment(s). For locations where this is not feasible, the Contracting Officer may permit use of computer diskettes or CD-ROM for data transfer. Data on the disks or CDs shall be exported using the QCS built-in export function.

1.9 MONTHLY COORDINATION MEETING

The Contractor shall update the QCS database each workday. At least monthly, the Contractor shall generate and submit an export file to the Government with schedule update and progress payment request. As required in Contract Clause "Payments", at least one week prior to submittal, the Contractor shall meet with the Government representative to review the planned progress payment data submission for errors and omissions. The Contractor shall make all required corrections prior to Government acceptance of the export file and progress payment request. Payment requests accompanied by incomplete or incorrect data submittals will be returned. The Government will not process progress payments until an acceptable QCS export file is received.

1.10 NOTIFICATION OF NONCOMPLIANCE

The Contracting Officer will notify the Contractor of any detected noncompliance with the requirements of this specification. The Contractor shall take immediate corrective action after receipt of such notice. Such notice, when delivered to the Contractor at the work site, shall be deemed sufficient for the purpose of notification.

-- End of Section --

SECTION 01321

PROJECT SCHEDULE

PART 1 GENERAL

1.1 SUBMITTALS

The following shall be submitted for Government approval in accordance with Section 01335 SUBMITTAL PROCEDURES: SD-07 Schedules Project Schedule; Horizontal Bar Chart and Periodic Payment Request Updates; and Projected Earnings Curve and Periodic Payment Request Updates. Revisions to the Project Schedule and Projected Earnings Curve for Modifications Issued to this Contract shall be coordinated with the Contracting Officer.

PART 2 PRODUCTS (Not Applicable)

PART 3 EXECUTION

3.1 GENERAL

The Contractor shall furnish a Project Schedule as described below. The scheduling of construction shall be the responsibility of the Contractor. Contractor management personnel shall actively participate in its development. Subcontractors and suppliers working on the project should also contribute in developing and maintaining an accurate Project Schedule. The approved Project Schedule shall be used to measure the progress of the work, to aid in evaluating time extensions, and to provide the basis of all progress payments.

3.2 BASIS FOR PAYMENT

The schedule shall be the basis for measuring Contractor progress. Lack of an approved schedule or scheduling personnel shall result in an inability of the Contracting Officer to evaluate Contractor progress for the purposes of payment. Failure of the Contractor to provide all information, as specified below, shall result in the disapproval of the entire Project Schedule submission and the inability of the Contracting Officer to evaluate Contractor progress for payment purposes. In the case where Project Schedule revisions have been directed by the Contracting Officer and those revisions have not been included in the Project Schedule, then the Contracting Officer may hold retainage up to the maximum allowed by contract, each payment period, until revisions to the Project Schedule have been made.

3.3 PROJECT SCHEDULE

3.3.1 Schedule of Construction

Within seven (7) calendar days after notice to proceed, the Contractor shall prepare and submit a Construction Schedule to the Contracting Officer for approval. This schedule shall address each payment line item and/or sub-line item listed in the Proposal Schedule separately.

3.3.2 Non-Compliance

Failure of the Contractor to comply with the requirements of the Contracting Officer shall be grounds for determination by the Contracting Officer that the Contractor is not prosecuting the work with sufficient diligence to ensure completion within the time specified in the contract. Upon making this determination, the Contracting Officer may terminate the Contractor's right to proceed with the work, or any separable part of it, in accordance with the default terms of this contract.

3.3.3 Horizontal Bar Chart

The required schedule shall utilize an automated scheduling program and shall be in the form of a horizontal bar chart. The line or sub-line item schedule of activities shall be listed down the left side of the page. A time scale shall run across the bottom of the page. Each work item shall be represented by a bar starting with the schedule start date and running continuously to the completion date.

3.3.4 Cost

Listed with each work item shall be a corresponding cost representing the total cost, such as material, labor, equipment, and overhead associated with that item. The total cost of the work items shall be equal to the Bid Price for that sub-line item of the Proposal Schedule.

3.3.5 Scheduled Project Completion

The schedule interval shall extend from Notice-To-Proceed to the contract completion date.

3.3.6 Projected Earning Curve

Submitted with the Construction Schedule shall be a Projected Earning Curve. The Projected Earning Curve is a plot of the Contractor's earnings on the vertical axis and the contract duration on the horizontal axis. The earnings figure shall relate to the complete value of the contract and need not reflect each facility separately.

3.3.7 Construction Schedule

The Construction Schedule shall be on one page with a maximum dimension of 90 cm by 120 cm. The Contractor shall submit the Projected Earnings Curve on the same page. The initial submittal shall include one (1) reproducible and four (4) copies, one (1) copy of which will be returned to the Contractor when approved.

3.3.8 Submission With Partial Payment Estimate

Each time the Contractor submits a payment request under this contract he shall also submit three (3) copies of the Bar Chart. The Bar Chart shall be annotated by indicating the percent complete for each activity directly on the bar. The Projected Earnings Curve shall be annotated by plotting actual earnings versus time on the same graph. Those work items reflecting performance which is behind schedule by fifteen (15) calendar days or more shall be fully explained in detail giving the reason for delay and the Contractor's plan for timely completion within the schedule.

3.3.9 Modifications

The Construction Schedule and Projected Earning Curve shall be revised to reflect any and all modifications issued to this contract as they are issued. Format and numbers of copies as defined in paragraph CONSTRUCTION SCHEDULE shall be submitted for approval by the Contracting Officer.

3.4 PERIODIC PROGRESS MEETINGS

Progress meetings to discuss payment shall include a monthly on-site meeting or shall be conducted at other regular intervals mutually agreed to at the preconstruction conference. During this meeting the Contractor shall describe, on an activity-by-activity basis, all proposed revisions and adjustments to the project schedule required to reflect the current status of the project. The Contracting Officer will approve activity progress, proposed revisions, and adjustments as appropriate.

3.4.1 Update Submission Following Progress Meeting

A complete update of the project schedule containing all approved progress, revisions, and adjustments, based on the regular progress meeting, shall be submitted not later than four (4) working days after the monthly progress meeting.

3.4.2 Progress Meeting Contents

Update information, including Actual Start Dates, Actual Finish Dates, Remaining Durations, and Cost to Date, shall be subject to the approval of the Contracting Officer.

3.4.3 Earnings Report

A compilation of the Contractor's Total Earnings on the project from the Notice-to-Proceed until the most recent Monthly Progress Meeting shall be recorded. This report shall reflect the Earnings of specific activities based on the agreements made in the field and approved between the Contractor and the Contracting Officer at the most recent Monthly Progress Meeting. Provided that the Contractor has provided a complete schedule update, this report shall serve as the basis of determining Contractor Payment. This report shall: sum all activities and provide a percent complete by individual activity and total project percent complete. The report shall contain, for each activity: activity identification, activity description, original budgeted amount, total quantity, quantity to date, percent complete (based on cost), and earnings to date.

3.4.4 Cost Completion

The earnings for each activity started shall be reviewed. Payment shall be based on earnings for each in-progress or completed activity. Payment for individual activities shall not be made for work that contains quality defects. A portion of the overall project amount may be retained based on delays of activities.

3.4.5 Network Analysis System

The Contractor may, as an option, submit to the Contracting Officer for approval, a time related network analysis in lieu of the previously specified bar chart.

-- End of Section --

SECTION 01335

SUBMITTAL PROCEDURES FOR DESIGN-BUILD SITE ADAPT PROJECTS

PART 1 GENERAL

1.1 REFERENCE

The publication listed below forms a part of this specification to the extent referenced. The publication is referenced to in the text by basic designation only.

CONSTRUCTION SPECIFICATIONS INSTITUTE

Manual of Practice

Construction Specifications Institute

http://www.csinet.org/s_csi/index.asp

601 Madison Street

Alexandria, Virginia

22314-1791

NATIONAL INSTITUTE OF BUILDING SCIENCES (NIBS)

Unified Master Reference List (UMRL)

National Institute of Building Sciences

1090 Vermont Avenue, NW, Suite 700

Washington, DC 20005-4905

Email: nibs@nibs.org

FAX: (202) 289-1092

Tele: (202) 289-7800

AFGHANISTAN ENGINEER DISTRICT

AFGHANISTAN ENGINEER DISTRICT

http://www.aed.usace.army.mil

U.S. Army Corps of Engineers

Attention: Qalaa House

APO AE 09356

1.2 SUBMITTAL CLASSIFICATION

Submittals are classified as follows.

1.2.1 DESIGN SUBMITTALS

Contractor furnished design submittals are the various design documents which primarily consist of field investigations, calculations, design analysis, drawings and specifications.

In addition, for each design submittal, the contractor shall submit all non-administrative modifications issued for the contract as part of the Design Submittal package to enable AED to validate that these modifications have been incorporated into this design submittal.

Design submittals should only address Contract requirements not shown on plans and specifications already furnished to the Contractor as part of this contract. Plans and specifications furnished to the Contractor shall NOT be included as part of any Design Submittal. The Contractor shall complete all work as shown in these furnished drawings and specifications without deviation, unless site conditions mandate changes (larger building foundations per geotechnical investigations, etc.).

The Contractor shall clearly label and date all design submittals to reflect the current design stage and date of submission to the Government to avoid confusion between current and previous submittals. The Contractor shall not begin construction work until the Government has reviewed and approved the work presented in each Design Submittal, including complete resolution of all DrChecks comments, and the Contracting Officer has cleared work for construction. Clearance for construction shall not be construed as meaning Government approval. Unless otherwise indicated, the risk for the design is the sole responsibility of the Contractor.

As a minimum, design submittals shall be submitted at the following intervals:

a. Site-Adapt General Design review - 65%

b. Final Site-Adapt Design review - 90%

c. Cleared For Construction review - 100%

1.2.1.1 SITE-ADAPT GENERAL DESIGN (65%)

This Design Submittal presents all information necessary to “Site Adapt” the fully designed and detailed buildings and other project features. It is crucial that the submittal is complete and includes all components noted below and any other pertinent information not listed

which the Contractor requires to enable construction to begin as soon as possible. As a minimum, for each Contract project location the submittal shall contain:

a. Results of the site topographic survey (in accordance with Paragraph 3.9.6.3 through 3.9.6.5 of this Section) which shall include highlighting of significant features (wadis, adjacent properties and structures, roads, etc.) to provide a detailed, overall understanding of the project site and surrounding area; demolition plan for existing site features; complete grading and drainage plan with existing grades, proposed grades, and building finished floor elevations based on Contract technical requirements;

b. Any necessary adaptations of the Concept Plan and detailed design drawings furnished with this Contract that might be required due to actual site constraints, to include: water supply/storage location and distribution layout plan; wastewater collection or treatment location and tie-in to all required buildings; electrical generation and distribution plan; connection of existing roads with ECP location(s); and any other changes required due to adjacent property or existing topography. As noted in Paragraph 1.2.1, this would also include proposed changes to the detailed drawings if, and only if, site conditions mandate revisions.

c. Geotechnical Report, indicating appropriate information for various site characteristics, soil parameters as determined by certified lab tests, allowable soil bearing capacities and confirmation that the assumed bearing capacity for the fully designed structures (typically stated as 0.75 kg/cm^2) can be achieved; estimated settlement for building foundation loads; and all changes to the given building foundation designs due to the Geotechnical Report conclusions.

d. Septic Tank drawings and details (if required by Section 01010 of the SOW), showing tank depth and sizing based on expected sanitary load, and all connecting piping, with dimensions.

e. Percolation test locations and results, and complete leachfield design (if required by Section 01010 of the SOW), which indicate the site will accommodate such a system for the given project requirements, and alternatives proposed if, and only if, the site characteristics will not support such a system.

f. Complete design analysis, plans and specifications for any contract feature(s) not already provided in the Contract that the Contractor would like Partial Clearance for Construction on once the Design Submittal has been approved, including project components with long ordering, fabrication and delivery times.

g. Outline of Construction Specification Sections to be used for other work yet to be submitted at the 90% Final Site-Adapt Design Review submittal, and those

Specification items requiring Government Approval (GA), unless 100% Technical Specifications were provided with the Contract.

h. Well design at each project site location to include a determination of water demand, water availability evaluation, and water quality analysis. Water demand evaluation shall be determined based on the requirements of the 01010 SOW and 01015 Technical Requirements. Water availability evaluation shall include data concerning study of existing water wells in the vicinity, study of hydrological data, and study of geological data. Well hydraulics data shall also be included from the test well or if available from vicinity wells. Water quality analysis shall include physical, chemical, and bacteriological analyses of water from either a test well or an existing well within the same aquifer of the proposed well.

Drawing for the well design shall include, at a minimum, material and dimensions of well pipe and casing, type and dimensions of screen, type and range of sizes of gravel surrounding screen and at bottom of well shaft, type of grouting for well seal, well pad, location and connection detail for hand pump if required by the 1010. Also required would be a detail of the wellhead with all associated valves, flowmeters, and chlorination system.

i. Preliminary drawing and details of any grease interceptors and oil-water separators required. Grease interceptors should either be gravity or hydro-mechanical types. Drawings would show sizing, depth, and all connecting piping. Design analysis shall include calculations for sizing both the interceptor/separator and connecting piping.

j. Preliminary cross sections of roads and sidewalks, showing all essential dimensions, materials, layers, and proposed fore and back slopes of adjacent drainage features.

k. All preliminary sketches of site storm drainage structures, including calculations in the design analysis for sizing and sloping of pipe runs and ditches. Provide cross sections of drainage structures such as ditches and culverts.

1.2.1.2 FINAL SITE-ADAPT DESIGN REVIEW (90%):

The review of this submittal is primarily to insure that the contract documents and design analysis are proceeding in a timely manner and that the Contract requirements and design criteria are being correctly understood and adhered to. The submittal shall consist of the following:

a. Design Analysis complete.

b. Draft Construction Specifications complete - all anticipated sections, edited to include only applicable requirements, if not provided as part of the Contract.

c. Construction Drawings complete with all 65% comments incorporated. The Contractor is expected to have completed all of his coordination checks and have the drawings in a design complete condition. The drawings shall be finalized at this time including the incorporation of any design review comments generated by all past design reviews. The drawings shall contain all the details necessary to assure a clear understanding of the work throughout construction.

1.2.1.3 “CLEARED FOR CONSTRUCTION” SUBMITTAL (100%):

The review of this submittal is to insure that the design is in accordance with directions provided the Contractor during the design process. The only effort remaining between the Final Site-Adapt Design Review Submittal and the "Cleared For Construction" Design Review Submittal is the incorporation of all Government review comments. The Contractor shall submit the following documents for this review:

a. Design Analysis, only if changes have occurred since 90% Design Submittal. The Design Analysis shall contain all explanatory material giving the design rationale for any design decisions which would not be obvious to an engineer reviewing the Final Drawings and Specifications.

b. Construction Specifications, complete.

c. Construction Drawings, complete.

Once the design documents have been "Cleared for Construction" by the Contracting Officer, the Contractor shall clearly identify each document by annotating it as "Cleared for Construction."

1.2.2 PARTIAL DESIGN SUBMITTALS

In the interest of expediting construction, the Contracting Officer may approve partial design submittals, procurement of materials and equipment, as well as issue the Notice To Proceed (NTP) for construction of those elements of the design which have been cleared for construction. Such partial notices to proceed shall be solely at the discretion of the Contracting Officer. The Contractor must obtain the approval of the Designer of Record (DOR) and the Government's concurrence for any Contractor proposed revision to the professionally stamped and sealed design reviewed and Cleared for Construction by the Government, before proceeding with the revision. The Government reserves the right to non-concur with any revision to the design, which may impact furniture, furnishings, equipment selections or operations decisions that were made, based on the reviewed and cleared for construction design. Any revision to the design, which deviates from the contract requirements (i.e., the RFP and the accepted proposal), will require a modification, pursuant to the Changes clause, in addition to Government concurrence. The Government reserves the right to disapprove such a revision. Unless the Government initiates a change to the contract requirements, or the Government determines that the Government furnished design criteria are incorrect and must be revised, any Contractor initiated proposed change to the contract requirements, which results in additional cost, shall strictly be at the Contractor's expense. The Contractor shall track all approved revisions to the reviewed and cleared for construction design and shall incorporate them into the As-Built design documentation, in accordance with Section 01780A, CLOSEOUT SUBMITTALS, Paragraphs 1.1 and 1.2, which lists all requirements associated with submission of editable CADD format As-Builts required as part of this contract. The Designer of Record shall document its professional concurrence on the As-Builts for any revisions by affixing its stamp and seal on the drawings and specifications.

1.2.3 DEVIATIONS AND CHANGES TO THE STANDARD DESIGNS

Contractor shall construct standard building designs as indicated. Any request to deviate or change the standard building designs must be due to changed site conditions ONLY and submitted to the AED Resident Office administering the contract. Contractor shall indicate the changes and provide a narrative justification for the changes proposed.

1.2.4 USE OF DrChecks$_{SM}$ FOR DESIGN SUBMITTAL COMMENT AND RESPONSE

1.2.4.1 DrChecks$_{SM}$ WEB LINK

All AED Design Submittal review comments will be documented using the standard design review tool for the U.S. Army Corps of Engineers, a web-based application called "DrChecks$_{SM}$". The web link to DrChecks$_{SM}$ is:

https://www.projnet.org/projnet/binKornHome/index.cfm

1.2.4.2 DrChecks$_{SM}$ VENDOR IDENTIFICATION AND TUTORIAL

Upon notification of award, the contractor shall immediately coordinate with the Chief, Engineering Branch, AED to acquire a vendor identification and a brief tutorial on the use of DrChecks$_{SM}$. The contractor is responsible for providing their own DrChecks$_{SM}$ Administrator within their own design staff personnel to access and accomplish actions within DrChecks$_{SM}$.

1.2.4.3 NOTIFICATION OF DrChecks$_{SM}$ FILE ACCESS

The Afghanistan Engineer District will complete a review at every Design Submittal stage for conformance with the technical requirements of the Contract and document all comments in DrChecks$_{SM}$. At completion of the review, a notification will be issued to the Contractor by the Contracting Officer's representative that the particular DrChecks$_{SM}$ file will be opened to the Contractor. Until this time, the Contractor is not able to view any AED comments for that particular Design Submittal.

1.2.4.4 FURTHER CONTRACTOR INFORMATION AFTER DrChecks$_{SM}$ REVIEWS

See Paragraph 3.7.4, Government Review, for further procedures and requirements associated with Design Submittal reviews.

1.2.5 CONSTRUCTION SUBMITTALS

1.2.5.1 Contractor Furnished Government Approved Construction Submittals (GA)

Government approved construction submittals are primarily related to plans (Contractor Quality Control, Accident Prevention, Resident Management System, Area Use, etc.), schedules (Project Schedule/Network Analysis), and certificates of compliance, reports and records/statements. They may also include proposed variations to approved design documents in accordance with the paragraph entitled "VARIATIONS".

In addition, GA construction submittals are required for the following:

a. CIVIL FEATURES

TESTING RESULTS: Data will include information on the locations and depths of all viable water supply sources at the site(s) involved and a water quantity and water quality analysis for each source from the Ministry of Public Health or other certified testing firm.

b. MECHANICAL FEATURES

EQUIPMENT SUBMITTALS: Manufacturer's standard catalog data, installation, Operation and Maintenance (O&M) manuals and construction details for water wells, water tanks, control valves, pipe insulation, water pumps, air handling units, condensers, variable air volume (VAV) boxes.
TESTING RESULTS: For water tanks, water pumps (including instrumentation), water piping, sprinkler systems, and oxygen systems, submit six (6) copies of each test containing the following information in bound letter-size booklets:

1) The date the tests were performed.
2) A list of equipment used, with calibration certifications.
3) A copy of measurements taken.
4) The parameters to be verified.
5) The condition specified for the parameter.
6) The inspection results, signed, dated, and certified by the installer. The certification shall state that required procedures were accomplished, that the procedures were conducted in compliance the plans and specifications.
7) A description of adjustments performed.

Individual reports shall be provided for storage tank tests, piping tests, system performance tests, high level alarm test, and the system leak tests. Drawings shall be folded blue lines, with the title block visible.

c. ELECTRICAL FEATURES

PRODUCT DATA and SHOP DRAWINGS: generators (and its auxiliaries), load bank, transformers, substations, panels/switchboards/motor control centers, lightning protection, receptacles, circuit breakers.
DESIGN DATA: lightning protection and grounding.

TEST DATA: Lightning protection and grounding.

d. ARCHITECTURAL FEATURES

PRODUCT DATA/CATALOGUE CUTS/SHOP DRAWINGS/SCHEDULES: Specialty doors and frames (fire rated, sound rated, bullet resistant, security, overhead rolling); door hardware; windows; metal roofing (including fasteners, flashing, and accessories); building insulation; fire-rated and water-resistant gypsum board; and other specialty products (bullet resistant glazing/panels).
COLOR BOARD: Architectural finishes
PRODUCT DATA/CATALOGUE CUTS/INSTALLATION INSTRUCTIONS: Exterior Insulation and Finish System (EIFS)

SHOP DRAWINGS: Casework/Cabinetry

1.2.5.2 For Information Only Construction Submittals (FIO)

All submittals not requiring Designer of Record or Government approval will be for information only. These construction submittals shall be checked, stamped, signed and dated by the Contractor's Quality Control Engineer, certifying that such submittal complies with the contract requirements. All Contractor submittals shall be subject to review by the Government at any time during the course of the contract. Any Contractor submittal found to contain errors or omissions shall be resubmitted as one requiring "approval". No adjustment for time or money will be allowed for corrections required as a result of noncompliance with plans or specifications. Normally submittals For Information Only will not be returned. Approval of the Contracting Officer is not required on FIO submittals. These submittals will be used for information purposes. The Government reserves the right to require the Contractor to resubmit any item found not to comply with the contract. This does not relieve the Contractor from the obligation to furnish material conforming to the plans and specifications and will not prevent the Contracting Officer from requiring removal and replacement if nonconforming material is incorporated in the work.

1.2.5.3 Variations

After design submittals have been reviewed and cleared for construction by the Contracting Officer, no submittal for the purpose of substituting materials, equipment, systems, and

patented processes will be considered by the Government unless submitted in accordance with the paragraph entitled VARIATIONS.

1.2.5.4 Additional Shop Drawings and Submittals

In accordance with the paragraph entitled DESIGN DISCREPANCIES, the Government may request the Design-Build Contractor to provide additional shop drawing and submittal type data subsequent to completion of the design.

1.2.5.5 Incomplete Design

The Design-Build Contractor shall not use construction submittals as a means to supplant and/or supplement an incomplete design effort.

1.3 SUBMITTAL CERTIFICATION

The CQC organization shall be responsible for certifying that all submittals and deliverables have been reviewed in detail for completeness, are correct, and are in strict conformance with the contract drawings, specifications, and reference documents.

1.3.1 Effective Quality Control System

The Contractor is responsible for quality control and shall establish and maintain an effective quality control system in compliance with Contract Clause 52.236-21 SPECIFICATIONS AND DRAWINGS FOR CONSTRUCTION - ALTERNATE I, and SECTION 01451 CONTRACTOR QUALITY CONTROL.

1.3.1.1 Organizational Responsibility

The quality control system shall cover all design, construction, subcontractor, manufacturer, vendor, and supplier operations at any tier, both onsite and offsite.

1.3.1.2 CQC System Manager Review and Approval

Prior to submittal, all items shall be checked and approved by the Contractor's Quality Control (CQC) System Manager. If found to be in strict conformance with the contract requirement, each item shall be stamped, signed, and dated by the CQC System Manager. Copies of the CQC organizations review comments indicating action taken shall be included within each submittal.

1.3.1.3 Determination of Compliance

Each submittal shall be complete and in sufficient detail to allow ready determination of compliance with contract requirements by the Contracting Officer. The contractor shall submit all required documentation with submittals. The U.S. Army Corps of Engineer (USACE) will not accept partial submittals.

1.3.2 Responsibility for Errors or Omissions

It is the sole responsibility of the Contractor to ensure that submittals do or do not comply with the contract documents. Government review, clearance for construction, or approval by the Contracting Officer shall not relieve the Contractor from responsibility for any errors or omissions in such drawings, nor from responsibility for complying with the requirements of this contract.

1.3.2.1 Government Review

Government review, clearance for construction, or approval of post design construction submittals shall not be construed as a complete check, but will indicate only that the general method of construction, materials, detailing and other information are satisfactory.

1.3.3 Substitutions

After design submittals have been reviewed and cleared for construction by the Contracting Officer, no re-submittal for the purpose of substituting materials or equipment will be considered unless justified as indicated in the paragraph entitled, “VARIATIONS.”

1.3.4 Additional Submittals

In conjunction with Contract Clause 52.236-5 MATERIAL AND WORKMANSHIP, the Contracting Officer may request submittals in addition to those specified when deemed necessary to adequately describe the work.

1.3.5 Untimely and Unacceptable Submittals

If the Contractor fails to submit submittals in a timely fashion, or repetitively submits submittals that are incomplete or not in strict conformance with the contract documents, no part of the time lost due to such actions shall be made the subject of claim for extension of time or for excess costs or damages by the Contractor.

1.3.6 Stamps

Stamps shall be used by the Contractor on all design and post design construction submittals to certify that the submittal meets contract requirements and shall be similar to the following:

Contractor (Firm Name)

Contract Number

Contract Name

I certify that this submittal accurate, is in strict conformance with all contract requirements, has been thoroughly coordinated and cross checked against all other applicable disciplines to prevent the omission of vital information, that all conflicts have been resolved, and that repetition has been avoided and, it is complete and in sufficient detail to allow ready determination of compliance with contract requirements by the Contracting Officer.

Name of CQC System Manager: _____

Signature of CQC System Manager: _____

Date: _____

1.4 ENGLISH LANGUAGE

All specifications, drawings, design analysis, design calculations, shop drawings, catalog data, materials lists, and equipment schedules submitted shall be in the English language.

1.5 UNITS OF MEASUREMENT

Design documents shall be prepared in accordance with the guidance offered in SECTION 01415 METRIC MEASUREMENTS.

The metric units used are the International System of Units (SI) developed and maintained by the General Conference on Weights and Measures (CGPM); the name International System of Units and the international abbreviation SI were adopted by the 11th CGPM in 1960.

1.5.1 Drawings

1.5.1.1 Site Layout

All site layout data shall be dimensioned in meters or coordinates, as appropriate. All details and pipe sizes shall be dimensioned in millimeters.

EXAMPLE: Masonry openings shall be a U.S. module to suit a standard U.S. door. The dimensions of the opening shall be given in SI units. Metric dimensions for site plans shall be in meters and fraction thereof. Dimensions for all other drawings shall be in millimeters using hard metric designations (example: 12 meters = 12 000). Hard metric is defined as utilizing standard metric products and the use of measurements in increments of fifty (50) and one hundred (100) millimeters.

1.5.1.2 Geo-reference

All site plans shall be geo-referenced using the WGS 1984 coordinate system, specifically the following: WGS 1984 UTM one 42 N. If the designer is not able to use the stated coordinate system the coordinate system used shall be correlated to the stated coordinate system. A table shall be provided within the site drawing set cross referencing the WGS84 system to that utilized. This is required to allow AED to incorporate the plans into GIS for storage, map production, and possible geospatial analysis of the different work sites.

1.5.2 Design Calculations

Calculations shall be in SI units to meet the requirements of the design. Quantities on the contract drawings stated in SI units shall also be stated in SI units in the design analysis to match the drawings.

1.5.3 Specifications

All equipment and products shall be specified according to U.S. standards and described by appropriate units as required herein.

1.6 WITHHOLDING OF PAYMENT FOR SUBMITTALS

1.6.1 Design Submittals

Payment for Design work will not be made in whole or in part until the Government has reviewed and cleared the design for construction.

1.6.2 Construction Submittals

Payment for materials incorporated in the work will not be made if required approvals have not been obtained. In event under separate clause of the contract, the Contractor is allowed partial or total invoice payment for materials shipped from the Continental United States (CONUS), and/or stored at the site, the Contractor shall with his request for such payment, submit copies of approvals (ENG Form 4025) certifying that the materials that are being shipped and/or stored have been approved and are in full compliance with the contract technical specifications.

PART 2 PRODUCTS

2.1 GENERAL

The following are contract deliverables which expound upon and finalize the design parameters/requirements outlined within the contract documents. They shall be prepared in such a fashion that the Prime Contractor is responsible to the Government and not as an internal document between the Prime Contractor and its Subcontractors, Vendors, Suppliers, etc.

2.2 PROJECT NARRATIVE

The Project Narrative shall be a bound set and shall contain the contract Request For Proposal (RFP) Sections 01010 and 01015 (and any additional RFP sections that are

appropriate). The RFP Section 01010 and 01015 shall be the latest version. Any subsequent changes to the RFP shall be clearly marked and highlighted with explanation for the changes. The Project Narrative shall also contain the general description of the project and a discussion of the design approach and design features for the project.

2.3 DESIGN ANALYSIS

2.3.1 Submittal

Only design analyses associated with the "Site Adapt" features of this contract shall be submitted for review. It shall be written in the English language with SI units of measure. The design analysis is a written explanation of the project design which is expanded and revised (updated) as the design progresses. The design analysis shall contain all explanatory material giving the design rationale for any design decisions which would not be obvious to an engineer reviewing the final drawings and specifications. The design analysis contains the criteria for, and the history of, the project design, including criteria furnished by the Government, letters, codes, references, conference minutes, and pertinent research. Design calculations, computerized and manual, are included in the design analysis. Narrative descriptions of design solutions are also included. Written material may be illustrated by diagrams and sketches to convey design concepts. Catalog cuts and manufacturer's data for all equipment items, shall be submitted. Specific requirements for the design analysis, listed by submittal phase, are noted in Paragraph 1.2.1.

2.3.2 Format

Format of design analysis shall closely match the standard format referenced within the RFP.

2.4 DESIGN CALCULATIONS

Only calculations associated with the "Site Adapt" features of this contract shall be submitted for review, unless site conditions mandate changes to drawings and specifications furnished with this Contract. All design calculations shall be presented

such that they are easily understood, correlated with RFP requirements (Section 1010 and 1015 criteria; codes; all other applicable or pertinent criteria) and all final conclusions clearly documented and summarized. The Design Submittal must include complete information (Soil Report, percolation test results, concrete design strengths, steel material properties, electrical loads, heat gain/loss assumptions, etc.) necessary to support all design calculations in order to easily and efficiently verify the accuracy of this information and the resulting project components shown in plans and specifications.

2.4.1 Submittal

When design calculations are voluminous, they shall be bound separately from the narrative part of the design analysis. Design calculations will include a title page, table of contents, and be indexed (tabbed) to separate distinct parts of the various analysis and design actions being accomplished to support plan drawings submitted. They shall be presented in a clear, consistent and legible format in order to quickly understand the analysis and design accomplished. Presentation shall be such that a person unfamiliar with the project features and associated analysis and design can quickly understand the overall design process and procedures, review the information in conjunction with the given set of plans and specifications, and verify the suitability of all information submitted.

All design calculations shall explain the source of loading conditions with assumptions and conclusions explained. The analysis and design methods shall also be explained, including assumptions, theories and formulae. Include applicable diagrams that are clearly explained and correlated with related computations, whether computer or hand generated. The design calculations shall include a complete and comprehensive list of the criteria (and date or version of the criteria) that the design/analysis will be compared to (codes, Corps of Engineers Engineering Regulations, Engineering Manuals, etc.). Within the separable elements of design calculations, the engineer shall cite the specific code or reference paragraph or section as appropriate to indicate conformance to requirements.

At the beginning of each project component design section, present a summary of all load conditions and combinations required per applicable code or Corps of Engineers manual or regulation. Then clearly identify the particular load case governing the design and clearly show how the particular analysis, construction materials to be used, and the specific design meet the governing load combination.

Calculation sheets shall carry the names or initials of the engineer and the checker and the dates of calculations and checking. No portion of the calculations shall be computed and checked by the same person.

2.4.2 Computer Analysis

Provide a clear summary of all computer outputs and highlight in the outputs information used in the analysis and design accomplished elsewhere in the calculations.

If a computerized analysis or design program is used (either commercial software packages or unique, designer-written computer analysis/design tools), the computations shall provide clear reference to the software program and version being used and an explanation of the validity of the particular program to the given application (where has the program been used before, what input and output does the program provide, is the program a recognized Corps of Engineers or industry standard). If the program is proprietary to the Contractor (not recognized by the Corps of Engineers or industry), the Contractor shall provide a sample hand calculation to verify the results of one set of data generated by the computer program.

State exactly the computation performed by the computer. Include applicable diagrams, adequately identified. Provide all necessary explanations of the computer printout format, symbols, and abbreviations. Use adequate and consistent notation. Provide sufficient information to permit manual checks of the results.

Each set of computer printouts shall be preceded by an index and by a description of the computation performed. If several sets of computations are submitted, they shall be accompanied by a general table of contents in addition to the individual indices.

When the computer output is large, it shall be divided into volumes at logical division points. All final computer results used in design shall be separated from the total pages of computer output that might be included in the design calculations for ease of review.

2.5 SPECIFICATIONS

Specifications for most work associated with this Contract have been furnished to the Contractor and only portions of them should be submitted for review with the "Site Adapt" portion of the work. If the Contractor determines that work associated with the "Site Adapt" features of this contract require additional specifications, they shall be submitted for review and approval. These additional specifications shall be prepared in accordance with the Construction Specifications Institute (CSI) format to match the format of specifications provided in the Contract.

2.5.1 Use of Unified Facilities Guide Specifications (UFGS)

If additional specifications are deemed necessary by the Contractor, UFGS (Uniform Federal Guide Specifications) are required when U.S. products and systems are required or used. Current UFGS information may be obtained at the following location: http://www.wbdg.org/ccb/browse_org.php?o=70.

Specifications for UFGS are in SpecsIntact format. SpecsIntact is government sponsored software used to edit specifications for government contracts. The software is available at the following link: http://specsintact.ksc.nasa.gov/index.asp.

2.5.2 Quality Control and Testing

Any additional specifications deemed necessary by the Contractor shall include required quality control and further indicate all testing to be conducted by the Contractor, its subcontractors, vendors and/or suppliers.

2.5.3 Ambiguities and indefinite specifications

Ambiguities, indefinite specification requirements (e.g., highest quality, workmanlike manner, as necessary, where appropriate, as directed etc) and language open to interpretation is unacceptable.

2.5.4 Industry Standards

2.5.4.1 U.S. Industry Standards

The Specifications shall be based on internationally accepted U.S. industry Standards. Customarily accepted publications may be found in the UNIFIED MASTER REFERENCE LIST (UMRL) which may be located at the following URL: http://www.hnd.usace.army.mil/techinfo/UFGS/UFGSref.htm.

To access the UMRL select the "Unified Facilities Guide Specifications" tab and scroll down to Unified Master Reference List (UMRL) (PDF version).

Examples of U.S. standards are: National Fire Protection Association (NFPA), International Building Code (IBC), American Concrete Institute (ACI), American Water Works Association (AWWA), ADAAG (ADA Accessibility Guidelines) for Buildings and Facilities, etc. Standards referenced shall be by specific issue; the revision letter, date or other specific identification shall be included.

This document lists publications referenced in the Unified Facilities Guide Specifications (UFGS) of the Corps of Engineers (USACE), the Naval Facilities Engineering Command (NAVFAC), the Air Force Civil Engineer Support Agency (AFCESA), and the guide specifications of the National Aeronautics and Space Administration (NASA). This document is maintained by the National Institute of Building Sciences (NIBS) based on information provided by the agencies involved and the standards producing organizations. The listing is current with information available to NIBS on the date of this publication.

Standards referenced in specifications and drawings prepared by the Contractor shall be by specific issue; the revision letter, date or other specific identification shall be included.

2.5.4.2 Non U.S. Industry Standards

If non-U.S. industry standards (e.g., codes, regulations, or technical references and norms) are authorized for use under this contract and are incorporated in the Contractor's design, one (1) copy of each standard referenced shall be provided to the Government.

Where a U.S. design and/or construction standard cannot be referenced due to non-availability of products and/or systems, another specification format using the CSI guidelines may be utilized for that particular product and/or system. If a majority of the specifications within this project reference non-U.S. products due to availability and/or other factors, the entire set of specifications are not required to be in UFGS and SpecsIntact format.

2.6 DRAWINGS

2.6.1 Computer Assisted Design and Drafting (CADD)

Computer Assisted Design and Drafting (CADD) is required for all work related to this contract. Only personnel proficient in the preparation of CADD drawings shall be employed to modify the contract drawings or prepare new drawings. The CADD deliverables shall meet the requirements of the A/E/C CADD Standard (Release 3.0). Emphasis is on drawings meeting sheet layout standards, level/layer naming standards and sheet naming conventions. The CADD standards may be downloaded at the CAD/BIM Technology Center at the following link: https://cadbim.usace.army.mil/default.aspx?p=s&t=13&i=4.

The Contractor shall furnish all softcopy design submittals (and As-Builts) using software applications in either .dwg (AutoCAD, AutoDesk release 2005 or later) or in .dgn (MicroStation, Bentley Systems version 8.0 or later) format. In addition, the Contractor is required to submit the softcopy design submittals in .pdf (Adobe Acrobat) format. Drawings prepared in any convention other than CADD, must have the written approval of the Contracting Officer.

2.6.2 Drawings

Drawings shall be prepared in the English language with metric (SI) units of measure. All the drawings and details of the working drawings shall be adequately labeled and cross-referenced. Complete, thoroughly checked, and coordination with other engineering

disciplines design drawings shall be submitted. At the final design submittal (100%) the Contractor shall have incorporated all design review comments generated by previous design review(s), have completed all of the constructability and coordination comments, and have the drawings in a Ready-to-Build condition. The drawings shall be complete at this time and contain all the details necessary to ensure a clear understanding of the work throughout construction.

2.6.3 Drawing Size Border Sheets

All drawings shall be prepared in size "A1" border sheets (594mm by 841mm). Hardcopy design submissions may be printed on half size drawing sheets (“A3”, 279 mm by 420 mm) for purposes of saving paper and for ease of review. If drawings are not readable in the half size reduction, the Contractor shall submit all drawings in A1 border sheets. All final contract drawing sets (As-Builts) shall be submitted on A1 border sheets. Drawing sheets shall be trimmed to specified size if necessary.

2.6.4 Sequence of Design Drawings

Referencing the A/E/C CADD Standard (pg. 13, Table 2-1 of the A/E/C CADD standards) the sequence of drawings shall follow the sequence as shown below:

Discipline

1. General
2. Hazardous Materials
3. Survey/Mapping
4. Geotechnical
5. Civil
6. Landscape
7. Structural

8. Architectural
9. Interiors
10. Equipment
11. Fire Protection
12. Plumbing
13. Process
14. Mechanical
15. Electrical
16. Telecommunications
17. Resource
18. Other Disciplines
19. Sub-Contractor/Shop Drawings
20. Operations

2.6.5 Drawing Folder Structure

CADD files shall be organized in a folder structure to what is described in Paragraph 2.6.4. For multi-building projects a folder of each building type shall be created and the applicable folders shown in each building type folder.

2.6.6 Drawing Sheet Assembly

CADD files shall be organized to what is described in “Option 2 – Use of Design Model Only” (page 10, Figure 2-3 of the A/E/C CADD Standard). This method will utilize one view and the use of “paper space” is not used. The border sheet shall be X-REF into each model file and scaled up to the applicable scale.

2.6.7 Model Files

Model files represent the building's physical layout and components such as floor plans and elevations. Model files shall be drawn to full size (1:1) in the default view. Floor Plan Model files represent one floor. Model files shall have coordinates (x,y,z) of 0,0,0 in paper space on layout. The exception for model files with coordinates 0,0,0 shall be the civil site plan (see section 1.5.1.2 Georeferencing).

2.6.8 Border Sheet Files

Border sheet files are used to assemble model files for plotting and viewing purposes. Every border sheet file has a drawing area, title block, border and represents one plotted drawing.

2.6.9 Layer/Level names

Layer or level files names shall follow the guidelines of appendix A and B of the A/E/C CADD standards. For AutoCAD, .dwt (drawing template files) shall be used to import the proper layers that will be inclusive of the correct line type, color, and line thickness of the respective layer.

2.6.10 Drawing File Naming Convention

CADD files shall follow the naming convention as described in the A/E/C CADD Standards. For model files reference pg 12 - 16, figure 2-4, tables 2-1 and 2-2. for sheet files reference pg 18 – 22, figure 2-5, table 2-3.

2.6.11 Sheet Identification Block

The sheet identifier will follow the name of the border sheet file. This will consist of the discipline designator, the sheet type designator and the sheet sequence number as referenced in pg 23, figure 2-6 of the A/E/C CADD Standards.

2.6.12 Drawing Scales

The scales indicated on the following list shall, in general, be used for all drawings. The Contractor may, at its option, make exceptions to scales indicated, if approved in writing by the Contracting Officer.

TYPICAL DRAWING SCALES	
DRAWING TYPE	**METRIC**
SITE PLAN	1:200
	1:400
	1:500
	1:600
	1:700
	1:1000
	1:2000
	1:5000
	1:6000
	1:10000
	1:20000
FLOOR PLAN	1:50
	1:100
	1:200
ROOF PLAN	1:200
EXTERIOR ELEVATIONS	1:100
	1:200
INTERIOR ELEVATIONS	1:50
	1:100
CROSS SECTIONS	1:50

	1:100
	1:200
WALL SECTIONS	1:20
STAIR DETAILS	1:10
DETAILS	1:5

2.6.13 Symbols, Line styles, & Patterns

Approved symbols, line styles, and patterns shall be in accordance with AEC CAD Standard Release 3.0 or current version (see Appendix D of the A/E/C CADD Standards). The approved symbols, line styles, and patterns associated with AutoCAD software maybe downloaded in the following link:

https://tsc.wes.army.mil/products/standards/aec/aecstdsym.asp

2.6.14 Plotter Prepared Original Drawings

Plotter prepared original drawings shall be prepared on 20 pound bond paper, unless otherwise approved and shall be plotted on the matte side. Raster plotters must provide a minimum resolution of 400 dpi while vector plotters shall provide a minimum resolution of 0.0010 inch with an accuracy of +0.1% of the move and a repeatability error of not more than 0.005 inch. Drawings produced from dot matrix plotters are not acceptable. Plots accompanied by the digital design file may be prepared on vellum: translucent bond is not acceptable. Line density shall be equivalent to that produced by black India ink: half tone plots are only acceptable where the half-tone color setting of RGB (red, green blue) settings equal a value of 153 (see pg. 27, Table 3-4 of the A/E/C CADD Standards). Drawings plotted in color is not acceptable. Manual changes to plotted originals are not acceptable.

2.6.15 Title and Revision Block

Title and revision block shall match examples shown in SITE ADAPT 1335a-Attachments-AED.pdf, Figures 1 through 4, furnished as an attachment to this RFP.

2.6.16 Legends

For each submittal, legends of symbols and lists of abbreviations shall be placed on the drawings. They shall include all of the symbols and abbreviations used in the drawing set, but shall exclude any symbols and abbreviations not used. Since many symbols are limited to certain design disciplines, there is a definite advantage to the use of separate legends on the initial sheet of each design discipline or in the Standard Details package for each discipline. If legends have not been shown by discipline, a legend shall be placed on the first drawing.

2.6.17 Location Grid

To facilitate the location of project elements and the coordination of the various disciplines' drawings, all plans shall indicate a column line or planning grid, and all floor plans (except structural plans) shall show room numbers.

2.6.18 Composite and Key Plans

If the plan of a large building or structure must be placed on two or more sheets in order to maintain proper scale, the total plan shall be placed on one sheet at a smaller scale. Appropriate key plans and match lines shall appear on segmented drawings. Key plans shall be used not only to relate large scale plans to total floor plans but also to relate individual buildings to complexes of buildings. Key plans shall be drawn in a convenient location and shall indicate the relative location of the represented plan area by crosshatching.

2.6.19 Specifications Placed on the Drawings

Details of standard products or items which are adequately covered by specifications shall not be included on the drawings.

2.6.20 Revisions

Drawing revisions shall be prepared only on the original CADD files. A revision area is required on all sheets.

2.6.21 Binding

All volumes of drawing prints shall be firmly bound and shall have covers of heavier bond than the drawing sheets. If posts are used to fasten sheets together, the drilled holes on the bond edges of the sheets shall be on 8-1/2-inch centers.

2.6.22 Government Provided files

At the Preconstruction meeting, the Contractor shall be provided a CD that shall contain the AED border sheet, the A/E/C CADD standards, and various other files related to the compliancy of CADD files to the A/E/C CADD standards.

PART 3 EXECUTION

3.1 GENERAL

3.1.1 Design Concept Coordination Meeting

Shortly after Notice To Proceed (NTP) the Government or contractor may suggest meeting(s) to review the Design Submittal process or discuss various aspects of the contract to enable prompt and efficient initiation of contract actions. Meeting(s) will be held to assure attention is focused on key project requirements (necessary contractor design

and Government review that is required to provide Construction Clearance), to discuss features and items of work that need to be submitted early due to long lead time items, or discuss other concepts/ideas that will help accelerate the contract work. Other Design Coordination meetings may be requested throughout the contract period if Government review of various contractor Design Submittals indicate poor design and plan or specification quality in order to clearly explain the changes and improvements required of the contractor, assure understanding of Government comments, code references and required investigations and calculations, to move forward with acceptable design and satisfactory plans and specifications.

3.1.2 Government Design Changes

Government design changes which do not increase construction costs shall be made at no charge to the Government. The Contracting Officer may request design submittals in addition to those listed when deemed necessary to adequately describe the work covered in the contract documents. Submittals shall be made in the respective number of copies and to the respective addresses set forth in the paragraph entitled SUBMITTAL PROCEDURE. Each submittal shall be complete and in sufficient detail to allow ready determination of compliance with contract requirements.

3.2 SUBMITTAL REGISTER

3.2.1 Design Submittals

The Contractor shall submit as part of his Project Schedule Design Submittal milestone dates. The Contractor shall post all actual dates of submittal actions (including clearance for construction) as they occur.

3.2.2 Construction Submittal Register (ENG Form 4288)

Attached to this section is ENG Form 4288 which the Contractor is responsible for developing for this contract. All design and construction submittals shall be shown on this register. The submittal register shall be the controlling document and will be used to

control all submittals throughout the life of the contract. The Contractor shall maintain and update the register on a monthly basis for the Contracting Officer's approval.

3.3 TRANSMITTAL FORM (ENG Form 4025)

The sample transmittal form (ENG Form 4025) attached to this section shall be used for submitting both design and construction submittals in accordance with the instructions on the reverse side of the form. These forms will be furnished to the Contractor. This form shall be properly completed by filling out all the heading blank spaces and identifying each item submitted. Special care will be exercised to ensure proper listing of the specification paragraph and/or sheet number of the contract drawings pertinent to the data submitted for each item.

3.4 PROGRESS SCHEDULE

The Contractor shall prepare and submit a design progress schedule to the Contracting Officer. The Critical Path Method (CPM) of network calculation shall be used to generate the Project Schedule. The progress schedule shall show, as a percentage of the total design price, the various items included in the contract and the order in which the Contractor proposes to carry on the work, with dates on which he will start the features of the work and the contemplated dates for completing same. Significant milestones such as review submittals shall be annotated. The Contractor shall assign sufficient technical, supervisory and administrative personnel to insure the prosecution of the work in accordance with the progress schedule. The Contractor shall correct the progress schedule at the end of each month and submit as required to the Contracting Officer. The approved Project Schedule shall be used to measure the progress of the work, to aid in evaluating time extensions, and to provide the basis of all progress payments.

3.5 SCHEDULING

3.5.1 Design Submittals

Adequate time (a minimum of fourteen (14) full calendar days exclusive of mailing time) shall be allowed for AED review and comment in DrChecks$_{SM}$. This time period starts on

the next full day after delivery of the Design Submittal to AED. If the Contractor fails to submit design submittals in a timely fashion, or repetitively submits design submittals that are not in strict conformance with the Contract documents, no part of the time lost due to such actions shall be made the subject of claim for extension of time or for excess costs or damages by the Contractor.

3.5.2 Construction Submittals

Contractor furnished Government Approved Construction Submittals (GA) for items noted in Paragraph 1.2.5 of this Section, or others as required by the COR, shall be submitted to the Area or Resident Office, per directions given at the Pre-Construction meeting. Adequate time (a minimum of fourteen (14) full calendar days exclusive of mailing time) shall be allowed for AED review and comment.

3.5.3 Post Design Construction Submittals

Submittals covering component items forming a system or items that are interrelated shall be scheduled to be coordinated and submitted concurrently. Certifications to be submitted with the pertinent drawings shall be so scheduled. Adequate time (a minimum of fourteen (14) full calendar days exclusive of mailing time) shall be allowed for review and approval. If the Contractor fails to submit post design construction submittals in a timely fashion, or repetitively submits submittals that are not in strict conformance with the Contract documents, no part of the time lost due to actions shall be made the subject of claim for extension of time or for excess costs or damages by the Contractor.

3.6 SUBMITTAL PROCEDURE

3.6.1 Design Submittals

3.6.1.1 Afghanistan Engineer District (AED)

One (1) half-size hard copy and two (2) soft copies (electronic version) of all design submittals (calculations, reports of field tests, design analysis, plans, specifications, etc)

shall be transmitted to the Government at the following address, by means of ENG Form 4025:

AFGHANISTAN ENGINEER DISTRICT

(1) DHL, FEDEX, UPS or any other courier service:

U.S. Army Corps of Engineers

Afghanistan Engineer District

House # 1, St. #1 West

West Wazir Akbar High School

Behind Amani High School

Kabul, Afghanistan

Attention: Chief, Engineering Branch

The soft copy (electronic version) and CD case shall both be clearly labeled (hand written information is not acceptable – typed labels are required) with contract information (contract #, title, contractor name, specific design submittal stage including if it is a Resubmittal, date of submission, components of the submittal – design analysis, plans, specifications, and if more than one CD then state 1 of “X”, 2 of “X”, etc., anti-virus information below, etc.)

The Contractor shall scan the soft copy (electronic version) of each Design Submittal using most up-to-date version of recognized Industry-standard anti-virus software (Symantec, Norton, etc.) to insure that no viruses are contained in it prior to acceptance by AED. The label shall indicate it has been scanned for viruses and the anti-virus software and version clearly indicated.

3.6.1.2 Resident/Area Engineer Office

Complete design submittals shall be provided to the Area and/or Resident Engineer Office such that these are received **at the same time** as these submittals are delivered to the AED address in Para. 3.6.1.1. At the Pre-Construction meeting, the Contractor will be furnished the Area and/or Resident Office address to which these submittals shall be provided along with the number and size of hard and soft (electronic version) copies required for these offices. As per Paragraph 3.6.1.1, soft copies are to be properly labeled and checked for viruses by the contractor prior to delivery.

3.6.1.3 Editable CADD Format As-Builts

This is a Design-Build project and in accordance with Contract Clause 52.227-7022 GOVERNMENT RIGHTS (UNLIMITED), the Government has non-exclusive rights to use the design on other projects. Therefore, the As-Builts furnished to the Government must be in an editable format. See Section 01780A CLOSEOUT SUBMITTALS, Paragraphs 1.1 and 1.2, for all requirements associated with submission of editable CADD format As-Builts required as part of this contract.

3.6.2 Post Design Construction Submittals

One (1) copy of all post design construction submittals shall be transmitted to:

AFGHANISTAN ENGINEER DISTRICT

(1) DHL, FEDEX, UPS or any other courier service:

U.S. Army Corps of Engineers

Afghanistan Engineer District

House # 1, St. #1 West

West Wazir Akbar High School

Behind Amani High School

Kabul, Afghanistan

Attention: Chief, Engineering Branch

3.6.3 Submittal Numbering System

Instructions on the numbering system to be used for construction submittals follows.

3.6.3.1 Submittals

Shop drawings and materials are listed on the Submittal Register (ENG Form 4288) as follows:

a. List is prepared according to contract specifications and drawings, picking up all items involved in the project.

b. This list is divided into sections as indicated in the specifications. For example:

Section	01015	"Technical Requirements"
Section	01335	“Design Submittals”
Section	02831	"Chain-Link Fence"
Section	02710	"Subdrainage System"
Section	03300	"Concrete For Building Construction"
Section	04200	"Masonry"

3.6.3.2 Numbering procedures for transmittal on ENG FORM 4025

Each Specification Section will have various requirements for submittals (design information, product data, test reports, procedures, etc.) to the Government for Approval (GA) or For Information Only (FIO). Items from different Sections cannot be submitted on the same ENG Form 4025. When furnishing one or more items from the same Section at a given time, a single ENG Form 4025 can be used to identify and submit these items. Block ‘b” of the 4025 entitled “DESCRIPTION OF ITEM SUBMITTED” should provide an accurate and unique description of each item being proposed by the Contractor. Item numbers (block “a” of the 4025 entitled “ITEM NO.”) will be automatically generated in QCS for each ENG Form 4025. QCS will track and automatically generate the “ITEM NO.” for all following ENG Form 4025s for the same Section number. To illustrate, a transmittal for the 65% Design Submittal required by Section 01335 might have the following Items:

ITEM NO. 1 Topographic Information

ITEM NO. 2 Geotechnical Report

ITEM NO. 3 Foundation Design

ITEM NO. 4 65% Plans

ITEM NO. 5 Outline of Construction Specifications to be used

If this was the first submittal furnished by the Contractor for Section 01335, then a Transmittal Number of 01335-1 would be generated using QCS. As new transmittals are generated in QCS, the last digit of the transmittal is increased incrementally, as follows:

Transmittal No. 01335-2

Transmittal No. 01335-3

Transmittal No. 01335-4

and so forth. The first transmittal submitted from each Specification Section will be “-1”, in other words, there will never be a “Transmittal No. 01335-0”.

The above illustration is true for all other Specification Sections included in the Request for Proposal or in the Construction Specifications compiled by the Contractor in the prosecution of work under the RFP.

3.6.3.3 Resubmittals

Should the Contractor be required to resubmit any transmittal due to one or more items on that transmittal being Coded “C” (Cleared for Construction, except as noted in attached comments, Resubmission Required) or “E” (NOT Cleared for Construction, see attached comments, resubmission required) by the Government, QCS will be used to generate the same transmittal number followed by the number "-1" for the first resubmittal, "-2" for the second resubmittal, "-3" for the third resubmittal, etc.

As an example, assume the 65% Design Submittal is provided to the Government as Transmittal 01335-9. Due to omissions or errors in that Submittal which result in a Code “E” being given, then the subsequent 65% Design Resubmittal #1 would be “Transmittal 01335-9.1”. Should a resubmittal again be necessary, it would be Design Resubmittal #2 and would be submitted as “Transmittal 01335-9.2”.

The purpose of this system is to avoid deviations from the Submittal Register and to track submittals in both RMS and DrChecks$_{SM}$. It should be noted that a new transmittal number following the above system CANNOT be generated in QCS unless the prior transmittal has been given a Code. If the Contractor is having difficulty generating the correct transmittal number, contact the COR to resolve the matter.

The Contractor use the above nomenclature and date of submission to the Government for Plan Cover Sheets; title blocks for all drawings; all Specification Cover Sheets; all specification pages; all Design Analysis Cover Sheets and associated pages; and similar labeling for all other documents included in the submittal.

See the attachment titled “SITE ADAPT 1335a-Attachments-AED.pdf” (Figures 1-4) for required Title Block Required Annotations drawing guidance.

3.6.4 Variations

If design or construction submittals show variations from the contract parameters and/or requirements, the Contractor shall justify such variations in writing, at the time of submission. Additionally, the Contractor shall also annotate block "h" entitled "variation" of ENG FORM 4025. After design submittals have been reviewed and cleared for construction by the Contracting Officer, no resubmittal for the purpose of substituting materials, equipment, systems, and patented processes will be considered unless accompanied by the following:

a. Reason or purpose for proposed variation, substitution, or revision.

b. How does quality of variation compare with quality of the specified item? This shall be in the form of a technical evaluation tabulating differences between the item(s) originally specified and what is proposed.

c. Provide a cost comparison. This shall include an acquisition and life cycle cost comparison.

d. For proprietary materials, products, systems, and patented processes a certification signed by an official authorized to certify in behalf of the manufacturing company that the proposed substitution meets or exceeds what was originally specified.

e. For all other actions, a certification signed by a licensed professional engineer or architect certifying that the proposed variation or revision meets or exceeds what was originally specified.

f. Advantage to the Government, if variation is approved, i.e. Operation and Maintenance considerations, better product, etc.

g. Ramifications and impact, if not approved.

If the Government review detects any items not in compliance with contract requirements or items requiring further clarification, the Contractor will be so advised. Lack of notification

by the Contracting Officer of any non-complying item does not relieve the Contractor of any contractual obligation.

3.6.5 Non-Compliance

The Contracting Officer will notify the Contractor of any detected noncompliance with the requirements of this specification. The Contractor shall take immediate corrective action after receipt of such notice. Such notice, when delivered to the Contractor at the worksite, shall be deemed sufficient for the purpose of notification. If the Contractor fails or refuses to comply promptly, the Contracting Officer may issue an order stopping all or part of the work until satisfactory corrective action has been taken. No part of the time lost due to such stop orders shall be made the subject of claim for extension of time or for excess costs or damages by the Contractor.

3.7 REVIEW OF CONTRACTOR PREPARED DESIGN DOCUMENTS

3.7.1 General

The work under contract will be subject to continuous review by representatives of the Contracting Officer. Additionally, joint design review conferences with representation by all organizations having a direct interest in the items under review may be held. The Contractor shall furnish copies of all drawings and related documents to be reviewed at the review conference on or before the date indicated by the Government. Additional conferences pertaining to specific problems may be requested by the Contractor or may be directed by the Contracting Officer as necessary to progress the work. The Contractor shall prepare minutes of all conferences and shall furnish two copies to the Contracting Officer within seven (7) days after the conference.

3.7.2 Independent Design Review

The Contractor shall have someone other than the Designer or Design Team perform an independent technical review of all specifications, drawings, design analysis, calculations, and other required data prior to submission to the Government. This review shall insure the professional quality, technical accuracy, and the coordination of all design analysis,

drawings and specifications, and other services furnished under this contract have been accomplished. Work must be organized in a manner that will assure thorough coordination between various details on drawings, between the various sections of the specifications, and between the drawings and specifications. The Contractor shall thoroughly cross-check and coordinate all work until he is professionally satisfied that no conflicts exist, vital information has not been omitted, and that indefinite language open to interpretation has been resolved. Upon completion of this review, the Contractor shall certify that each design submittal is complete, accurate, is in strict conformance with all contract requirements, that repetition has been avoided, that all conflicts have been resolved, and that the documents have thoroughly coordinated and cross checked against all the applicable disciplines to prevent the omission of vital information.

3.7.3 Contractor's Quality Control Organization Review

The Contractor shall thoroughly review each submittal prior to submission to the Contracting Officer to assure it is complete, correct and unified. This review shall be for the purposes of eliminating errors, interferences, and inconsistencies, and of incorporating design criteria, review comments, specifications, and any additional information required. The Contractor will give evidence of such review of all items in each submittal ENG Form 4025, by annotating Column “g” (titled “For Contractor Use Code”) of this Form with the letter “A,” meaning the Contractor has reviewed it and is indicating it is “Approved as Submitted”. Design submittals submitted to the Contracting Officer without evidence of the above requirements or the Contractor's certified approval will be returned for resubmission. No part of the time lost due to such resubmissions shall be made the subject of claim for extension of time or for excess costs or damages by the Contractor.

3.7.4 Government Review

a. Within 14 days after Notice to Proceed, the Contractor shall submit, for approval, a complete design schedule with all submittals and review times indicated in calendar dates. The Contractor shall update this schedule monthly. After receipt, the Government will be allowed fourteen (14) full days to review and comment on all Design Submittals, except as noted below. This time period starts on the next full day after delivery of the Design Submittal to AED.

b. If a design submittal is deficient (errors on ENG Form 4025; incorrect drawing title block information; missing or incomplete features required in the submittal;

etc.), it will be returned immediately without further review for correction and resubmission. The review time will begin when the corrected submittal is received. The Contractor may be liable for liquidated damages owed to the Government for returned design submittals due to deficiencies.

c. The contractor shall not begin construction work until the Government has reviewed the Contractor's Design Submittal and cleared it for construction. Clearance for construction does not mean Government approval. Government review shall not be construed as a complete check but will evaluate the general design approach and adherence to contract parameters. The Government Review is often limited in time and scope. Therefore, the Contractor shall not consider any review performed by the Government as an excuse for incomplete work.

d. Upon completion of the review the Contractor will be notified by the Contracting Officer Representative that the DrChecks$_{SM}$ file is open for viewing and response to AED comments. The Contracting Officer will indicate whether the Design Submittal, or portions thereof, has or has not been cleared for construction using the following action codes:

A – Cleared for Construction

B – Cleared for Construction, except as noted in attached comments

C – Cleared for Construction, except as noted in attached comments, resubmission required

E - NOT Cleared for Construction, see attached comments, resubmission required

FX – Receipt acknowledged, does not comply as noted with contract requirements.

These codes shall NOT be used by the Contractor.

Design submittals Cleared for Construction by the Contracting Officer shall not relieve the Contractor from responsibility for any design errors or omissions and any liability associated with such errors, nor from responsibility for complying with the requirements of this contract.

3.7.4.1 Incorporation of Government Review Comments

a. The Contractor shall review each comment, furnish a complete response in DrChecks$_{SM}$ as to how the comment will be addressed in the Design Analysis, Plans and Specifications, or other Design Submittal stipulations required in this Contract. The Contractor will then incorporate each comment into the design submittal along with other work required at the next Design Submittal stage. The Contractor shall furnish disposition of all comments in DrChecks$_{SM}$, with the next scheduled submittal. The disposition shall identify action taken with citation of location within the relevant design document. Generalized statements of intention such as "will comply" or "will revise the specification" are not acceptable. During the design review process, comments will be made on the design submittals that will change the drawings and specifications. The Government will make no additional payments to the Contractor for the incorporation of comments. Review comments are considered part of the contract administration process.

b. If the Contractor disagrees technically with any comment or comments and does not intend to comply with the comment, he must clearly outline, with ample justification, the reasons for noncompliance within five (5) days after close of review period in order that the comment can be resolved.

c. The Contractor is cautioned that if he believes the action required by any comment exceeds the requirements of this contract, he should flag the comment in DrChecks$_{SM}$ as a scope change, and notify the COR in writing immediately.

d. If a design submittal is over one (1) day late in accordance with the latest design schedule, the Government review period may be extended 7 days. Submittal date revisions must be made in writing at least five (5) days prior to the submittal.

3.7.4.2 Conferences

As necessary, conferences will be conducted between the Contractor and the Government to resolve review comments.

A review conference may be held at the completion of AED review and subsequent Contractor response for each design submittal. The review conference will be held at the Corps District Office in Kabul, Afghanistan. The Contractor shall bring the personnel that developed the design submittal to the review conference.

3.7.4.3 Design Deficiencies

Design deficiencies noted by the Government shall be corrected prior to the start of design for subsequent features of work which may be affected by, or need to be built upon, the deficient design work.

3.7.5 Design Discrepancies

The Contractor shall be responsible for the correction of incomplete design data, omissions, and design discrepancies which become apparent during construction. The Contractor shall provide the Contracting Officer with a proposed recommendation for correcting a design error, within three (3) calendar days after notification by the Contracting Officer. The Contracting Officer will notify the Contractor of any detected noncompliance with the foregoing requirements. The Contractor shall take immediate corrective action after receipt of such notice. Such notice, when delivered to the Contractor at the worksite, shall be deemed sufficient for the purpose of notification. If the Contractor fails or refuses to comply promptly, the Contracting Officer may issue an order stopping all or part of the work until satisfactory corrective action has been taken. No part of the time lost due to such stop orders shall be made the subject of claim for extension of time or for excess costs or damages by the Contractor. Should extensions of design, fabrication plans and/or specific manufacturer's details be required as a result of a Government issued Change Order, the Government will make an equitable adjustment in accordance with Contract Clause 52.243-4 entitled CHANGES.

3.8 Phased or "Fast-Track" Design

3.8.1 General

If approved by the Government, design and construction sequencing may be effected on an incremental basis as each approved phase or portion (e.g., demolition, geotechnical, site work, exterior utilities, foundations, substructure, superstructure, exterior closure, roofing, interior construction, mechanical, electrical, etc.) of the design is completed.

3.8.2 Sequence of Design-Construction (Fast-Track)

After receipt of the Contract Notice to Proceed (NTP) the Contractor shall initiate design, comply with all design submission requirements and obtain Government review of each submission. The contractor may begin construction on portions of the work for which the Government has reviewed the final design submission and has determined satisfactory for purposes of beginning construction. The Contracting Officer will notify the Contractor when the design is cleared for construction. The Government will not grant any time extension for any design resubmittal required when, in the opinion of the Government, the initial submission failed to meet the minimum quality requirements as set forth in the contract.

3.8.3 Notice-to-Proceed for Limited Construction

If the Government allows the Contractor to proceed with limited construction based on pending minor revisions to the reviewed Final Design submission, no payment will be made for any in-place construction related to the pending revisions until they are completed, resubmitted and are satisfactory to the Government.

3.8.4 In-Place Construction Payment

No payment will be made for any in-place construction until all required submittals have been made, reviewed and are satisfactory to the Government.

3.8.5 Commencement of Construction

Construction of work may begin after receipt of the clearance for construction (Notice to Proceed) for each design phase. Any work performed by the Contractor prior to receipt of the clearance for construction, shall be at the Contractor's own risk and expense. Work cleared for construction that does not conform to the design parameters and/or requirements of this contract shall be corrected by the Contractor at no additional cost or time to the Government.

3.9 Conduct of Work

3.9.1 Performance

Perform the work diligently and aggressively, and promptly advise the Contracting Officer of all significant developments.

3.9.2 Telephone Conversations

Prepare a summary, and promptly furnish a copy thereof to the Contracting Officer, of all telephone conversations relating to the design work under this contract.

3.9.3 Cooperation with Others

Cooperate fully with other firms, consultants and contractors performing work under the program to which this contract pertains, upon being advised by the Contracting Officer that such firms or individuals have a legitimate interest in the program, have need-to-know status, and proper security clearance where required.

3.9.4 Technical Criteria

All designs, drawings, and specifications shall be prepared in accordance with the contract documents and with the applicable publications referenced therein. As soon as possible, the Contractor shall obtain copies of all publications applicable to this contract. Availability of publications (where to purchase) is contained in Specification Section 01420 entitled: SOURCES FOR REFERENCE PUBLICATIONS. Any deviations from the technical criteria contained in the contract documents or in the applicable publications, including the use of criteria obtained from the user or other sources, must receive prior approval of the Contracting Officer. Where the technical criteria contained or referred to herein are not met, the Contractor will be required to conform his design to the same at his own time and expense.

3.9.5 Conflicts

Any conflicts, ambiguities, questions or problems encountered by the Contractor in following the criteria shall be immediately submitted in writing to the Contracting Officer with the Contractor's recommendations. Prior to submission to the Government the Contractor shall take appropriate measures to obtain clarification of design criteria requirements, to acquire all pertinent design information, and to incorporate such information in the work being performed.

3.9.6 Design Priorities

The design of this project shall consider the remote location and harsh environment of this project and the impact this will have on sources of technical supply, the cost of construction, the low level of maintenance, and the difficulty of obtaining replacement parts. Unless stated otherwise in this contract, the following design priorities shall be followed.

3.9.6.1 Construction Life Span

Permanent Construction. Buildings and facilities shall be designed and constructed to serve a life expectancy of more than 25 years, to be energy efficient, and to have finishes, materials, and systems that are low maintenance and low life cycle cost.

3.9.6.2 Operability

Systems including but not necessarily limited to mechanical, electrical, communications, etc., must be simple to operate and easy to maintain.

3.9.6.3 Standardization

Use of standardized materials, products, equipment, and systems is necessary to minimize the requirements for replacement parts, storage facilities, and service requirements.

3.9.6.4 Topographic Surveys, Easements, and Utilities

Unless otherwise stated in the contract, the Contractor will be responsible for detailed topographic mapping, available easements, and utility information for the project.

3.9.6.5 Horizontal and Vertical Control

The mapping shall be based on the base coordinate system. If the base system cannot be found, the surveyor shall use any established monuments. If monuments have been destroyed or do not exist, an assumed horizontal and vertical datum shall be established, using arbitrary coordinates of 10,000n and 10,000e and an elevation of 1,000 meters. The horizontal and vertical control established on site shall be a closed loop with third order accuracy and procedures. Provide three (3) concrete survey monuments at the survey site. All of the control points established at the site shall be plotted at the appropriate coordinate point and shall be identified by name or number, and adjusted elevations. The location of the project site, as determined by the surveyor shall be submitted in writing to the Contracting Officer. The site location shall be identified by temporary markers, approved by the Contracting Officer before proceeding with the surveying work.

3.9.6.6 Topography Requirements

A sufficient quantity of horizontal and vertical control shall be established to provide a detailed topographic survey at 1:500 scale with one quarter meter contour intervals minimum. Intermediate elevations shall be provided as necessary to show breaks in grade and changes in terrain.

The contours shall accurately express the relief detail and topographic shapes. In addition, 90 percent of the elevations or profiles interpolated from the contours shall be correct to within one-half of the contour interval and spot elevations shall be correct within plus or minus 20 millimeters.

Spot elevations affecting design of facilities shall be provided. Specifically, break points or control points in grades of terrain such as tops of hills, bottoms of ditches and gullies, high bank elevations, etc.

All surface and sub-surface structures features within the area to be surveyed shall be shown and identified on the topographic maps. In addition, these features shall be located by sufficient distance ties and labeled on the topographic sheets to permit accurate scaling and identification.

The location and sizes of potable, sanitary, electrical and mechanical utilities within the survey site shall be shown on the survey map. Sanitary manholes and appurtenances shall show top elevations and invert elevations.

3.9.7 Occupational Safety and Health Act

The facilities, systems, and equipment designed under this contract shall comply with the Occupational Safety and Health Act (OSHA), Code of Federal Regulations, Title 29, Chapter XVII, Parts 1910 and 1926. Any problems in incorporating these standards due to conflicts with other technical criteria shall be submitted to the Contracting Officer for resolution.

3.9.8 Asbestos Containing Materials

Asbestos containing material (ACM) will not be used in the design of new structures or systems. In the event no other material is available which will perform the required function or where the use of other material would be cost prohibitive, a waiver for the use of asbestos containing materials must be obtained from AED.

3.9.8.1 Existing Construction

Asbestos containing materials (ACM) presently included in existing construction to be rehabilitated or otherwise modified as a result of this project shall be removed and a non-asbestos containing material substituted in lieu thereof.

3.9.8.2 Suspected Asbestos Containing Materials

All such structures and systems shall be inspected to determine the presence or probable presence of ACM. When ACM is suspected, a documented survey will be performed. The survey will be developed into an abatement design and will be made a part of the design documents. In the event no other material is available which will perform the required function or the use of a substitute material would be cost prohibitive due to initial cost and tear-out of existing construction, a waiver for the retention of the asbestos containing material must be obtained from the Contracting Officer.

3.10 VALUE METHODOLOGY/VALUE ENGINEERING

The Contractor during the course of his design shall be alert for and shall identify those high-cost low-value items or areas which he considers may be accomplished in different ways that will increase the value of the project at the same or less cost. Potential value engineering study items shall be reported to the Value Engineer through the Contracting Officer.

3.10.1 Performance Oriented Value Engineering Change Proposal (VECP)

In reference to Contract Clause 52.248-3, "Value Engineering - Construction", the Government may refuse to entertain a "Value Engineering Change Proposal" (VECP) for those "performance oriented" aspects of the Contract Documents which were addressed in the Contractor's accepted contract proposal and which were evaluated in competition with other Proposers for award of this contract. For purposes of this clause, the term "performance oriented" refers to those aspects of the design criteria or other contract requirements which allow the Proposer or the Contractor certain latitude, choice of and flexibility to propose in its accepted contract offer a choice of design, technical approach, design solution, construction approach or other approach to fulfill the contract requirements. Such requirements generally tend to be expressed in terms of functions to be performed, performance required or essential physical characteristics, without dictating a specific process or specific design solution for achieving the desired result.

3.10.2 Prescriptive Oriented Value Engineering Change Proposal (VECP)

The Government may consider a VECP for those "prescriptive" aspects of the Solicitation documents, not addressed in the Contractor's accepted contract proposal or addressed but evaluated only for minimum conformance with the Solicitation requirements. For purposes of this clause, the term "prescriptive" refers to those aspects of the design criteria or other Solicitation requirements wherein the Government expressed the design solution or other requirements in terms of specific materials, approaches, systems and/or processes to be used. Prescriptive aspects typically allow the Proposers little or no freedom in the choice of design approach, materials, fabrication techniques, methods of installation or other approach to fulfill the contract requirements.

3.11 ATTACHMENTS

The following attachments form an integral part of this specification:

ENG FORM 4025-R, Mar 95 - Transmittal of Shop Drawings, Equipment Data, Material Samples, or Manufacturer's Certificate of Compliance (2 pages)

ENG FORM 4288-R, Mar 95 - Submittal Register

Figure 1 – AED Title Block

Figure 2 – AED Management Block

Figure 3 – AED Issue Block & Required Notations

Figure 4 – Border Sheet Size

-- End of Section -

SECTION 01415

METRIC MEASUREMENTS

1.1 REFERENCES

The publications listed below form a part of this specification to the extent referenced. The publications are referred to within the text by the basic designation only.

ASTM INTERNATIONAL (ASTM)

ASTM E 621	(1994; R 1999e1) Use of Metric (SI) Units in Building Design and Construction (Committee E-6 Supplement to E380)
ASTM SI 10	(2002) American National Standard for Use of the International System of Units (SI): The Modern Metric System

1.2 GENERAL

This project includes metric units of measurements. The metric units used are the International System of Units (SI) developed and maintained by the General Conference on Weights and Measures (CGPM); the name International System of Units and the international abbreviation SI were adopted by the11th CGPM in 1960. A number of circumstances require that both metric SI units and English inch-pound (I-P) units be included in a section of the specifications. When both metric and I-P measurements are included, the section may contain measurements for products that are manufactured to I-P dimensions and then expressed in mathematically converted metric value(soft metric) or, it may contain measurements for products that are manufactured to an

industry recognized rounded metric (hard metric)dimensions but are allowed to be substituted by I-P products to comply with the law. Dual measurements are also included to indicate industry and/or Government standards, test values or other controlling factors, such as the code requirements where I-P values are needed for clarity or to trace back to the referenced standards, test values or codes.

1.3 USE OF MEASUREMENTS IN SPECIFICATIONS

Measurements in specifications shall be either in SI or I-P units as indicated, except for soft metric measurements or as otherwise authorized. When only SI or I-P measurements are specified for a product, the product shall be procured in the specified units (SI or I-P) unless otherwise authorized by the Contracting Officer. The Contractor shall be responsible for all associated labor and materials when authorized to substitute one system of units for another and for the final assembly and performance of the specified work and/or products.

1.3.1 Hard Metric

A hard metric measurement is indicated by an SI value with no expressed correlation to an I-P value. Hard metric measurements are often used for field data such as distance from one point to another or distance above the floor. Products are considered to be hard metric when they are manufactured to metric dimensions or have an industry recognized metric designation.

1.3.2 Soft Metric

a. A soft metric measurement is indicated by an SI value which is a mathematical conversion of the I-P value shown in parentheses (e.g. 38.1 mm (1-1/2 inches)). Soft metric measurements are used for measurements pertaining to products, test values, and other situations where the I-P units are the standard for manufacture, verification, or other controlling factor. The I-P value shall govern while the metric measurement is provided for information.

b. A soft metric measurement is also indicated for products that are manufactured in industry designated metric dimensions but are required by law to allow substitute I-P products. These measurements are indicated by a manufacturing hard metric product dimension followed by the substitute I-P equivalent value in parentheses (e.g., 190 x 190 x 390 mm (7-5/8 x 7-5/8 x 15-5/8inches)).

1.3.3 Neutral

A neutral measurement is indicated by an identifier which has no expressed relation to either an SI or an I-P value (e.g., American Wire Gage (AWG) which indicates thickness but in itself is neither SI nor I-P).

1.4 COORDINATION

Discrepancies, such as mismatches or product unavailability, arising from use of both metric and non-metric measurements and discrepancies between the measurements in the specifications and the measurements in the drawings shall be brought to the attention of the Contracting Officer for resolution.

1.5 RELATIONSHIP TO SUBMITTALS

Submittals for Government approval or for information only shall cover the SI or I-P products actually being furnished for the project. The Contractor shall submit the required drawings and calculations in the same units used in the contract documents describing the product or requirement unless otherwise instructed or approved. The Contractor shall use ASTM SI 10 and ASTM E 621 as the basis for establishing metric measurements required to be used in submittals.

-- End of Section --

SPECIFICATION SECTION 01451

CONTRACTOR QUALITY CONTROL

PART 1: GENERAL

1.1 REFERENCES

The publications listed below form a part of this specification to the extent referenced. The publications are referred to within the text by the basic designation only.

U.S. ARMY CORPS OF ENGINEERS (USACE)

ER 1110-1-12 (1993)	Quality Management
EM 385-1-1	Safety and Health Requirements Manual

1.2 PAYMENT

Separate payment will not be made for providing and maintaining an effective Quality Control program, and all costs associated therewith shall be included in the applicable unit prices or lump-sum prices contained in the Bidding Schedule.

PART 2PRODUCTS (Not Applicable)

PART 3EXECUTION

3.1 GENERAL REQUIREMENTS

The Contractor is responsible for quality control and shall establish and maintain an effective quality control system in compliance with the Contract Clauses and this specification section. The quality control system shall consist of plans, procedures, and organization necessary to produce an end product which complies with the contract requirements. The system shall cover all construction operations, both onsite and offsite, and shall be keyed to the proposed construction sequence. The site project superintendent will be held responsible for the quality of work on the job and is subject to removal by the Contracting Officer for non-compliance with the quality requirements specified in the contract. The site project superintendent in this context shall be the highest level manager responsible for the overall construction activities at the site, including quality and production. The site project superintendent shall maintain a physical presence at the site at all times, except as otherwise acceptable to the Contracting Officer, and shall be responsible for all construction and construction related activities at the site.

3.2 CQM TRAINING REQUIREMENT

Before project design and construction begin, the Contractor's Quality Control Manager is required to have completed the U.S. Army Corps of Engineers CQM course, or equivalent. The Construction Trades Training Center (CTTC) in Jalalabad, Afghanistan provides a course that satisfies the requirement. Courses are offered at regular intervals. For enrollment and course information contact CTTC at the following:

Mhd. Haris

e-mail: mharis@afghanreconstruction.org
Telephone: 0700 08 0602

Pervaiz
e-mail: adpzmuj@yahoo.com
Telephone: 0700 61 3133

3.3 QUALITY CONTROL PLAN

The Contractor shall furnish for review by the Government, not later than five (5) days after receipt of Notice-to-Proceed (NTP) the proposed Contractor Quality Control (CQC) Plan. The plan shall identify personnel, procedures, control, instructions, records, and forms to be used.

3.2.1 Content of the CQC Plan

The CQC Plan shall include, as a minimum, the following to cover all construction operations, both on site and off-site, including work by subcontractors, fabricators, suppliers and purchasing agents:

a. A description of the quality control organization, including a chart showing lines of authority and acknowledgment that the CQC staff shall implement the three phase control system for all aspects of the work specified. The staff shall include a CQC System Manager who shall report to the project superintendent.

b. The name, qualifications (in resume format), duties, responsibilities, and authorities of each person assigned a CQC function.

c. A copy of the letter to the CQC System Manager signed by an authorized official of the firm which describes the responsibilities and delegates sufficient authorities to adequately perform the functions of the CQC System Manager, including authority to stop work which is not in compliance with the contract. The CQC System Manager shall issue letters of direction to all other various quality control representatives outlining duties, authorities, and responsibilities. Copies of these letters shall also be furnished to the Government.

d. Procedures for scheduling, reviewing, certifying, and managing submittals, including those of subcontractors, offsite fabricators, suppliers, consultants, and purchasing agents. These procedures shall be in accordance with Specification 01335 SUBMITTAL PROCEDURES.

e. Control, verification, and acceptance testing procedures for each specific test to include the test name, specification paragraph requiring test, feature of work to be tested, test frequency, and person responsible for each test.

f. Procedures for tracking preparatory, initial, and follow-up control phases and control, verification, and acceptance tests including documentation.

g. Procedures for tracking construction deficiencies from identification through acceptable corrective action. These procedures shall establish verification that identified deficiencies have been corrected.

h. Reporting procedures, including proposed reporting formats.

i. A list of the definable features of work. A definable feature of work is a task which is separate and distinct from other tasks, has separate control requirements, and may be identified by different trades or disciplines, or it may be work by the same trade in a different environment. Although each section of the specifications may generally be considered as a definable

feature of work, there are frequently more than one definable features under a particular section. This list will be agreed upon during the coordination meeting.

3.2.2 Additional Requirements for Design Quality Control (DQC) Plan

The following additional requirements apply to the Design Quality Control

(DQC) plan:

(1) The Contractor shall provide and maintain a Design Quality Control (DQC) Plan as an effective quality control program which will assure that all services required by this design contract are performed and provided in a manner that meets professional architectural and engineering quality standards. As a minimum, all documents shall be technically reviewed by competent, independent reviewers identified in the DQC Plan. The same element that produced the product shall not perform the independent technical review (ITR). The Contractor shall correct errors and deficiencies in the design documents prior to submitting them to the Government.

(2) The Contractor shall include the design schedule in the master project schedule, showing the sequence of events involved in carrying out the project design tasks within the specific contract period. This should be at a detailed level of scheduling sufficient to identify all major design tasks, including those that control the flow of work. The schedule shall include review and correction periods associated with each item. This should be a forward planning as well as a project monitoring tool. The schedule reflects calendar days and not dates for each activity. If the schedule is changed, the Contractor shall submit a revised schedule reflecting the change within 7 calendar days. The Contractor shall include in the DQC Plan the discipline-specific checklists to be used during the design and quality control of each submittal. These completed checklists shall be submitted at each design phase as part of the project documentation. Example checklists can be found in ER 1110-1-12.

(3) The DQC Plan shall be implemented by an Design Quality Control Manager who has the responsibility of being cognizant of and assuring that all documents on the project have been coordinated. This individual shall be a person who has verifiable engineering or architectural design experience and is a registered professional engineer or architect. The Contractor shall notify the Contracting Officer, in writing, of the name of the individual, and the name of an alternate person assigned to the position.

The Contracting Officer will notify the Contractor in writing of the acceptance of the DQC Plan. After acceptance, any changes proposed by the Contractor are subject to the acceptance of the Contracting Officer.

3.2.3 Acceptance of Plan

Acceptance of the Contractor's plan is required prior to the start of construction. Acceptance is conditional and will be predicated on satisfactory performance during the construction. The Government reserves the right to require the Contractor to make changes in the CQC plan and operations including removal of personnel, as necessary, to obtain the quality specified.

3.2.4 Notification of Changes

Notification of Changes. After acceptance of the QC plan, the Contractor shall notify the Contracting Officer in writing a minimum of seven calendar days prior to any proposed change. Proposed changes are subject to acceptance by the Contracting Officer.

3.3 COORDINATION MEETING

After the Pre-construction Conference, before start of construction, and prior to acceptance by the Government of the Quality Control Plan, the Contractor shall meet with the Contracting Officer or

Authorized Representative and discuss the Contractor's quality control system. The CQC Plan shall be submitted for review a minimum of 5 calendar days prior to the Coordination Meeting. During the meeting, a mutual understanding of the system details shall be developed, including the forms for recording the CQC operations, control activities, testing, administration of the system for both on-site and off-site work, and the interrelationship of Contractor's Management and control with the Government's Quality Assurance. Minutes of the meeting shall be prepared by the Government and signed by both the Contractor and the Contracting Officer. The minutes shall become a part of the contract file. There may be occasions when subsequent conferences will be called by either party to reconfirm mutual understandings and/or address deficiencies in the CQC system or procedures, which may require corrective action by the Contractor.

3.4 QUALITY CONTROL ORGANIZATION

3.4.1 Personnel Requirements

The requirements for the CQC organization are a CQC System Manager, and sufficient number of additional qualified personnel to ensure safety and contract compliance. Personnel identified in the technical provisions as requiring specialized skills to assure the required work is being performed properly will also be included as part of the CQC organization. The Contractor's CQC staff shall maintain a presence at the site at all times during progress of the work and have complete authority and responsibility to take any action necessary to ensure contract compliance. The CQC staff shall be subject to acceptance by the Contracting Officer. The Contractor shall provide adequate office space, filing systems and other resources as necessary to maintain an effective and fully functional CQC organization. Complete records of all letters, material submittals, shop drawing submittals, schedules and all other project documentation shall be promptly furnished to the CQC organization by the Contractor. The CQC organization shall be responsible to maintain these documents and records at the site at all times, except as otherwise acceptable to the Contracting Officer.

3.4.2 CQC System Manager

The Contractor shall identify an individual within his organization at the site of the work who shall be responsible for overall management of the CQC and have the authority to act in all CQC matters for the Contractor. The CQC system manager shall be a graduate engineer, graduate architect, or a graduate construction manager, with experience on construction projects similar in type to this contract OR a construction person with a minimum of ten (10) years in related work. The CQC System Manager shall be on the site at all times during construction and shall be employed by the Contractor. The CQC System Manager shall be assigned no other duties. An alternate for the CQC System Manager will be identified in the plan to serve in the event of the CQC system manager's absence. The requirements for the alternate will be the same as for the designated CQC manager.

3.4.3 Not Used.

3.4.4 Additional Requirement

In addition to the above experience and/or education requirements, the CQC System Manager shall have completed the course entitled "Construction Quality Management For Contractors". This course is periodically offered by the government, and inquiries as to the next course offering may be directed to the local construction field office.

3.4.5 Organizational Changes

The Contractor shall maintain the CQC staff at full strength at all times. When it is necessary to make changes to the CQC staff, the Contractor shall revise the CQC Plan to reflect the changes and submit the changes to the Contracting Officer for acceptance.

3.5 SUBMITTALS AND DELIVERABLES

Submittals, if needed, shall be made as specified in the STR titled SUBMITTAL PROCEDURES. The CQC organization shall be responsible for certifying that all submittals and deliverables are in compliance with the contract requirements.

3.6 CONTROL

Contractor Quality Control is the means by which the Contractor ensures that the construction, to include that of subcontractors and suppliers, complies with the requirements of the contract. At least three phases of control shall be conducted by the CQC System Manager for each definable feature of the construction work as follows:

3.6.1 Preparatory Phase.

This phase shall be performed prior to beginning work on each definable feature of work, after all required documents and materials are approved/accepted, and after copies are at the work site. This phase shall include:

a. A review of each paragraph of applicable specifications, reference codes, and standards. A copy of those sections of referenced codes and standards, in the English language unless specifically approved otherwise by the Contracting Officer, applicable to that portion of the work to be accomplished in the field shall be made available by the Contractor at the preparatory inspection. These copies shall be maintained in the field and available for use by Government personnel until final acceptance of the work.

b. A review of the contract drawings.

c. A check to assure that all materials and/or equipment have been tested, submitted, and approved.

d. A check to assure that provisions have been made to provide required control inspection and testing.

e. Examination of the work area to assure that all required preliminary work has been completed and is in compliance with the contract.

f. A physical examination of required materials, equipment, and sample work to verify that they are on hand, conform to approved shop drawings or submitted data, and are properly stored.

g. Reviews of the appropriate activity hazard analysis to ensure safety requirements are met.

h. Discussion of procedures for constructing the work including repetitive deficiencies, construction tolerances and workmanship standards for that feature of work.

i. A check to ensure that the Contracting Officer has accepted the portion of the plan for the work to be performed.

j. Discussion of the initial control phase.

k. The Government shall be notified at least 24 hours in advance of beginning any of the required action of the preparatory phase. This phase shall include a meeting conducted by the CQC system manager and attended by the superintendent, other CQC personnel (as applicable), and the foreman responsible for the definable feature. The results of the

preparatory phase actions shall be documented by separate minutes prepared by the CQC system manager and attached to the daily QC report. The Contractor shall instruct applicable workers as to the acceptable level of workmanship required in order to meet contract specifications.

3.6.2 Initial Phase.

This phase shall be accomplished at the beginning of a definable feature of work. The following shall be accomplished:

a. A check of preliminary work to ensure that it is in compliance with contract requirements. Review minutes of the preparatory meeting.

b. Verification of full contract compliance. Verify required control inspection and testing.

c. Establish level of workmanship and verify that it meets minimum acceptable workmanship standards. Compare with sample panels as appropriate.

d. Resolve all differences.

e. Check safety to include compliance with and upgrading of the safety plan and activity hazard analysis. Review the activity analysis with each worker.

f. The Government shall be notified at least 24 hours in advance of beginning the initial phase. Separate minutes of this phase shall be prepared by the CQC system manager and attached to the daily QC report. Exact location of initial phase shall be indicated for future reference and comparison with follow-up phases.

g. The initial phase should be repeated for each new crew to work on-site, or any time acceptable specified quality standards are not being met.

3.6.3 Follow-up Phase.

Daily checks shall be performed to assure continuing compliance with contract requirements, including control testing, until completion of the particular feature of work. The checks shall be made a matter of record in the CQC documentation. Final follow-up checks shall be conducted, and all noted deficiencies corrected, prior to the start of additional features of work that may be affected by the deficient work. The Contractor shall not build upon nor conceal non-conforming work.

3.6.4 Additional Preparatory and Initial Phases

Additional preparatory and initial phases may be required by the Contracting Officer on the same definable features of work if the quality of on-going work is unacceptable; if there are changes in the applicable QC staff or in the on-site production supervision or work crew; if work on a definable feature is resumed after a substantial period of inactivity; or if other problems develop.

3.7 TESTS

3.7.1 Testing Procedure

The Contractor shall perform tests specified or required to verify that control measures are adequate to provide a product that conforms to contract requirements. Upon request, the Contractor shall furnish to the Government duplicate samples of test specimens for possible testing by the

Government. Costs incidental to the transportation of samples or materials shall be borne by the Contractor.

Testing includes operation and/or acceptance tests when specified. A list of tests to be performed shall be furnished as a part of the CQC plan. The list shall give the test name, frequency, specification paragraph containing the test requirements, the personnel and laboratory responsible for each type of test, and an estimate of the number of tests required. The Contractor shall perform the following activities and record and provide the following data:

a. Verify that testing procedures comply with contract requirements.

b. Verify that facilities and testing equipment are available and comply with testing standards.

c. Check test instrument calibration data against certified standards.

d. Verify that recording forms and test identification control number system, including all of the test documentation requirements, have been prepared.

e. Results of all tests taken, both passing and failing tests, shall be recorded on the Quality Control report for the date taken. Specification paragraph/item reference, location where tests were taken, and the sequential control number identifying the test will be given. Actual test reports may be submitted later, if approved by the Contracting Officer, with a reference to the test number and date taken. An information copy of tests performed by an off-site or commercial test facility will be provided directly to the Contracting Officer. Failure to submit timely test reports, as stated, may result in nonpayment for related work performed and disapproval of the test facility for this contract.

3.8 COMPLETION INSPECTION

3.8.1 Punch-Out Inspection

Near the end of the work, or any increment of the work established by a time stated in the SPECIAL CONTRACT REQUIREMENTS Clause, "Commencement, Prosecution, and Completion of Work", or by the specifications, the CQC Manager shall conduct an inspection of the work. A punch list of items which do not conform to the approved drawings and specifications shall be prepared and included in the CQC documentation, as required by paragraph DOCUMENTATION. The list of deficiencies shall include the estimated date by which the deficiencies will be corrected. The CQC System Manager or staff shall make a second inspection to ascertain that all deficiencies have been corrected. Once this is accomplished, the Contractor shall notify the Government that the facility is ready for the Government Pre-Final inspection.

3.8.2 Pre-Final Inspection

The Government will perform the pre-final inspection to verify that the facility is complete and ready to be occupied. A Government Pre-Final Punch List may be developed as a result of this inspection. The Contractor's CQC System Manager shall ensure that all items on this list have been corrected before notifying the Government, so that a Final inspection with the customer can be scheduled. Any items noted on the Pre-Final inspection shall be corrected in a timely manner. These inspections and any deficiency corrections required by this paragraph shall be accomplished within the time slated for completion of the entire work or any particular increment of the work if the project is divided into increments by separate completion dates.

3.8.3 Final Acceptance Inspection

The Contractor's Quality Control Inspection personnel, plus the superintendent or other primary management person, and the Contracting Officer's Representative shall be in attendance at the final acceptance inspection. Additional Government personnel including, but not limited to, those from Base/Post Civil Facility Engineer user groups, and major commands may also be in attendance. The final acceptance inspection will be formally scheduled by the Contracting Officer based upon results of the Pre-Final inspection. Notice shall be given to the Contracting Officer at least 14 days prior to the final acceptance inspection and shall include the Contractor's assurance that all specific items previously identified to the Contractor as being unacceptable, along with all remaining work performed under the contract, will be complete and acceptable by the date scheduled for the final acceptance inspection. Failure of the Contractor to have all contract work acceptably complete for this inspection will be cause for the Contracting Officer to bill the Contractor for the Government's additional inspection cost in accordance with the contract clause titled "Inspection of Construction".

3.9 DOCUMENTATION

The Contractor shall maintain current records providing factual evidence that required quality control activities and/or tests have been performed. These records shall include the work of subcontractors and suppliers and shall be on an acceptable form that includes, as a minimum, the following information:

a. Contractor/subcontractor and their area of responsibility.

b. Operating plant/equipment with hours worked, idle, or down for repair.

c. Work performed each day, giving location, description, and by whom. When Network Analysis (NAS) is used, identify each phase of work performed each day by NAS activity number.

d. Test and/or control activities performed with results and references to specifications/drawings requirements. The control phase shall be identified (Preparatory, Initial, Follow-up). List of deficiencies noted, along with corrective action.

e. Quantity of materials received at the site with statement as to acceptability, storage, and reference to specifications/drawings requirements.

f. Submittals and deliverables reviewed, with contract reference, by whom, and action taken.

g. Offsite surveillance activities, including actions taken.

h. Job safety evaluations stating what was checked, results, and instructions or corrective actions.

i. Instructions given/received and conflicts in plans and/or specifications.

j. Contractor's verification statement.

These records shall indicate a description of trades working on the project; the number of personnel working; weather conditions encountered; and any delays encountered. These records shall cover both conforming and deficient features and shall include a statement that equipment and materials incorporated in the work and workmanship comply with the contract. The original and one copy of these records in report form shall be furnished to the Government daily within forty-eight (48) hours after the date covered by the report, except that reports need not be submitted for days on which no work is performed. As a minimum, one report shall be prepared and submitted for every 7 days of no work and on the last day of a no work period. All calendar days shall be accounted for throughout the

life of the contract. The first report following a day of no work shall be for that day only. Reports shall be signed and dated by the CQC System Manager. The report from the CQC System Manager shall include copies of test reports and copies of reports prepared by all subordinate quality control personnel.

3.10 SAMPLE FORMS

In accordance with Specification 01312 QUALITY CONTROL SYSTEM, the contractor shall use the forms produced by and printed from QCS. Samples of any forms required to meet the requirements of this section which are not produced by that system shall be included in the contractors Quality Control Plan.

3.11 NOTIFICATION OF NONCOMPLIANCE

The Contracting Officer will notify the Contractor of any detected noncompliance with the foregoing requirements. The Contractor shall take immediate corrective action after receipt of such notice. Such notice, when delivered to the Contractor at the work site, shall be deemed sufficient for the purpose of notification. If the Contractor fails or refuses to comply promptly, the Contracting Officer may issue an order stopping all or part of the work until satisfactory corrective action has been taken. No part of the time lost due to such stop orders shall be made the subject of claim for extension of time or for excess costs or damages by the Contractor.

-- End of Section --

SECTION 01525

SAFETY AND OCCUPATIONAL HEALTH REQUIREMENTS

PART 1 GENERAL

For contractor safety on projects associated with this program, compliance with EM 385-1-1 safety requirements will be the long-term goal reached by growing a safety culture. This compliance will, by necessity, be achieved through a phased-in process. In the Commander's letter at the preface of the EM 385-1-1, he acknowledges that in OCONUS locations, strict compliance with the manual may not be possible – and through the hazard analysis process, safety measures can be developed to attain the same degree of safety.

This specification consists of two parts:

1) Sections 1.1 through 3.12.1, which are the standard safety specifications for work in Europe District and;

2) Appendix A, Phasing approach for safety in emerging countries where there is little or no national safety standards.

1.1 REFERENCES

The publications listed below form a part of this specification to the extent referenced. The publications are referred to within the text by the basic designation only.

AMERICAN NATIONAL STANDARDS INSTITUTE (ANSI)

ANSI A10.32	Personal Fall Protection - Safety Requirements for Construction and Demolition Operations
ANSI Z359.1(1992; R 1999)	Safety Requirements for Personal Fall Arrest Systems, Subsystems and Components
ANSI/ASSE A10.34(2001)	Protection of the Public on or Adjacent to Construction Sites
ASME B30.3(1996)	Construction Tower Cranes

ASME INTERNATIONAL (ASME)

ASME B30.22(2000)	Articulating Boom Cranes
ASME B30.5(2004)	Mobile and Locomotive Cranes

NATIONAL FIRE PROTECTION ASSOCIATION (NFPA)

NFPA 10(2002)	Portable Fire Extinguishers
NFPA 241(2000)	Safeguarding Construction, Alteration, and Demolition Operations
NFPA 51B(2003)	Fire Prevention During Welding, Cutting, and Other Hot Work
NFPA 70(2005)	National Electrical Code
NFPA 70E(2004)	Electrical Safety in the Workplace

U.S. ARMY CORPS OF ENGINEERS (USACE)

EM 385-1-1(2003) Safety	Safety and Health Requirements

U.S. NATIONAL ARCHIVES AND RECORDS ADMINISTRATION (NARA)

29 CFR 1910	Occupational Safety and Health Standards (OSHA)
29 CFR 1910.146	Permit-required Confined Spaces
29 CFR 1915	Confined and Enclosed Spaces and Other Dangerous Atmospheres in Shipyard Employment
29 CFR 1919	Gear Certification
29 CFR 1926	Safety and Health Regulations for Construction
29 CFR 1926.500	Fall Protection

1.2 SUBMITTALS

Government approval is required for submittals with a "G" designation; submittals not having a "G" designation are for information only. When used, a designation following the "G" designation identifies the office that will review the submittal for the Government. The following shall be submitted in accordance with SR SUBMITTAL PROCEDURES:

SD-01 Preconstruction Submittals

Accident Prevention Plan (APP); G, ACC

Activity Hazard Analysis (AHA); G, ACC

Crane Critical Lift Plan; G, ACC

Proof of qualification for Crane Operators; G, ACC

SD-06 Test Reports

Reports: Submit reports as their incidence occurs, in accordance with the requirements of the paragraph entitled, "Reports."

Accident Reports

Monthly Exposure Reports

Crane Reports

Regulatory Citations and Violations

SD-07 Certificates

Confined Space Entry Permit

Contractor Safety Self-Evaluation Checklist; G, ACC

Submit one copy of each permit/certificate attached to each Daily Quality Control Report.

1.3 DEFINITIONS

a. Competent Person for Fall Protection. A person who is capable of identifying hazardous or dangerous conditions in the personal fall arrest system or any component thereof, as well as their application and use with related equipment, and has the authority to take prompt corrective measures to eliminate the hazards of falling.

b. High Visibility Accident. Any mishap which may generate publicity and/or high visibility.

c. Medical Treatment. Treatment administered by a physician or by registered professional personnel under the standing orders of a physician. Medical treatment does not include first aid treatment even through provided by a physician or registered personnel.

d. Qualified Person for Fall Protection. A person with a recognized degree or professional certificate, extensive knowledge, training and experience in the field of fall protection who is capable of performing design, analysis, and evaluation of fall protection systems and equipment.

e. Recordable Injuries or Illnesses. Any work-related injury or illness that results in:

(1) Death, regardless of the time between the injury and death, or the length of the illness;

(2) Days away from work (any time lost after day of injury/illness onset);

(3) Restricted work;

(4) Transfer to another job;

(5) Medical treatment beyond first aid;

(6) Loss of consciousness; or

(7) A significant injury or illness diagnosed by a physician or other licensed health care professional, even if it did not result in (1) through (6) above.

f. "USACE" property and equipment specified in USACE EM 385-1-1 should be interpreted as Government property and equipment.

1.4 DRUG PREVENTION PROGRAM

Conduct a proactive drug and alcohol use prevention program for all workers, prime and subcontractor, on the site. Ensure that no employee uses illegal drugs or consumes alcohol during work hours. Ensure there are no employees under the influence of drugs or alcohol during work hours. After accidents, collect blood, urine, or saliva specimens and test the injured and involved employees for the influence of drugs and alcohol. A copy of the test shall be made available to the Contracting Officer upon request.

1.5 REGULATORY REQUIREMENTS

In addition to the detailed requirements included in the provisions of this contract, work performed shall comply with USACE EM 385-1-1, and in particular, the requirements of the European Union Council Directive 92/57/EEC of 24 June 1992 on the implementation of minimum safety and health requirements at temporary or mobile construction sites. Submit matters of interpretation of standards to the appropriate administrative agency for resolution before starting work. Where the requirements of this specification, applicable laws, criteria, ordinances, regulations, and referenced documents vary, the most stringent requirements shall apply.

1.6 SITE QUALIFICATIONS, DUTIES AND MEETINGS

1.6.1 Personnel Qualifications

1.6.1.1 Site Safety and Health Officer (SSHO)

Site Safety and Health Officer (SSHO) shall be provided at the work site at all times to perform safety and occupational health management, surveillance, inspections, and safety enforcement for the Contractor. The Contractor Quality Control (QC) person can only be the SSHO on this project if approved by the Contracting Officer. Any project exceeding 1 Million US dollars in value shall have a full time SSHO. The SSHO shall meet the following requirements: A minimum of 5 years safety work on similar projects; 30-hour OSHA construction safety class or European Union equivalent within the last 5 years; an average of at least 24 hours of formal safety training each year for the past 5 years. Competent person training as needed.

1.6.1.2 Competent Person for Confined Space Entry

Provide a competent person meeting the requirements of EM 385-1-1 who is assigned in writing by the Government Designated Authority (GDA) to assess confined spaces and who possesses demonstrated knowledge, skill and ability to:

a. Identify the structure, location, and designation of confined and permit-required confined spaces where work is done;

b. Calibrate and use testing equipment including but not limited to, oxygen indicators, combustible gas indicators, carbon monoxide indicators, and carbon dioxide indicators, and to interpret accurately the test results of that equipment;

c. Perform all required tests and inspections specified in Section 06.I of EM 385-1-1;

d. Assess hazardous conditions including atmospheric hazards in confined space and adjacent spaces and specify the necessary protection and precautions to be taken;

e. Determine ventilation requirements for confined space entries and operations;

f. Assess hazards associated with hot work in confined and adjacent space and determine fire watch requirements; and,

g. Maintain records required.

1.6.1.3 Crane Operators

Crane operators shall meet the requirements in USACE EM 385-1-1, Section 16 and Appendix G. In addition, crane operators shall be designated as qualified by a source that qualifies crane operators (i.e., union, a government agency, or and organization that tests and qualifies crane operators). Proof of current qualification shall be provided.

1.6.2 Personnel Duties

1.6.2.1 Site Safety and Health Officer (SSHO)/Superintendent

a. Conduct daily safety and health inspections and maintain a written log which includes area/operation inspected, date of inspection, identified hazards, recommended corrective actions, estimated and actual dates of corrections. Safety inspection logs shall be attached to the Contractors' daily quality control report.

b. Conduct mishap investigations and complete required reports. Maintain an accident/injury log such as the OSHA Form 300 or host nation equivalent, and Daily Production reports for prime and sub-contractors.

c. Maintain applicable safety reference material on the job site.

d. Attend the pre-construction conference, pre-work meetings including preparatory inspection meeting, and periodic in-progress meetings.

e. Implement and enforce accepted APPS and AHAs.

f. Maintain a safety and health deficiency tracking system that monitors outstanding deficiencies until resolution. A list of unresolved safety and health deficiencies shall be posted on the safety bulletin board.

g. Ensure sub-contractor compliance with safety and health requirements.

Failure to perform the above duties will result in dismissal of the superintendent and/or SSHO, and a project work stoppage. The project work stoppage will remain in effect pending approval of a suitable replacement.

1.6.3 Meetings

1.6.3.1 Preconstruction Conference

a. Contractor representatives who have a responsibility or significant role in accident prevention on the project shall attend the preconstruction conference. This includes the project superintendent, site safety and health officer, quality control supervisor, or any other assigned safety and health professionals who participated in the development of the APP (including the Activity Hazard Analyses (AHAs) and special plans, program and procedures associated with it).

b. The Contractor shall discuss the details of the submitted APP to include incorporated plans, programs, procedures and a listing of anticipated AHAs that will be developed and implemented during the performance of the contract. This list of proposed AHAs will be reviewed at the conference and an agreement will be reached between the Contractor and the Contracting Officer's representative as to which phases will require an analysis. In addition, a schedule for the preparation, submittal, review, and acceptance of AHAs shall be established to preclude project delays.

c. Deficiencies in the submitted APP will be brought to the attention of the Contractor at the preconstruction conference, and the Contractor shall revise the plan to correct deficiencies and re-submit it for acceptance. Work shall not begin until there is an accepted APP.

d. The functions of a Preconstruction conference may take place at the Post-Award Kickoff meeting for Design Build Contracts.

1.6.3.2 Safety Meetings

Shall be conducted and documented as required by EM 385-1-1. Minutes showing contract title, signatures of attendees and a list of topics discussed shall be attached to the Contractors' daily quality control report.

1.7 TRAINING

1.7.1 New Employee Indoctrination

New employees (prime and sub-contractor) will be informed of specific site hazards before they begin work. Documentation of this orientation shall be kept on file at the project site.

1.7.2 Periodic Training

Provide Safety and Health Training in accordance with USACE EM 385-1-1 and the accepted APP. Ensure all required training has been accomplished for all onsite employees.

1.7.3 Training on Activity Hazard Analysis (AHA)

Prior to beginning a new phase, training will be provided to all affected

1.8 ACCIDENT PREVENTION PLAN (APP)

The Contractor shall use a qualified person to prepare the written site-specific APP in both English and in the host nation language. Prepare the APP in accordance with the format and requirements of USACE EM 385-1-1 and as supplemented herein. Cover all paragraph and subparagraph elements in USACE EM 385-1-1, Appendix A, "Minimum Basic Outline for Accident Prevention Plan". Specific requirements for some of the APP elements are described below. The APP shall be job-specific and shall address any unusual or unique aspects of the project or activity for which it is written. The APP shall interface with the Contractor's overall safety and health program. Any portions of the Contractor's overall safety and health program referenced in the APP shall be included in the applicable APP element and made site-specific. The Government considers the Prime Contractor to be the "controlling authority" for all work site safety and health of the subcontractors. Contractors are responsible for informing their subcontractors of the safety provisions under the terms of the contract and the penalties for noncompliance, coordinating the work to prevent one craft from interfering with or creating hazardous working conditions for other crafts, and inspecting subcontractor operations to ensure that accident prevention responsibilities are being carried out. The APP shall be signed by the person and firm (senior person) preparing the APP, the Contractor, the on-site superintendent, the designated site safety and health officer.

Submit the APP to the Contracting Officer 15 calendar days prior to the date of the preconstruction conference for acceptance. Work cannot proceed without an accepted APP.

Once accepted by the Contracting Officer, the APP and attachments will be enforced as part of the contract. Disregarding the provisions of this contract or the accepted APP will be cause for stopping of work, at the discretion of the Contracting Officer, until the matter has been rectified.

Once work begins, changes to the accepted APP shall be made with the knowledge and concurrence of the Contracting Officer, project superintendent, SSHO and quality control manager. Should any hazard become evident, stop work in the area, secure the area, and develop a plan to remove the hazard. Notify the Contracting Officer within 24 hours of discovery. In the interim, all necessary action shall be taken to restore and maintain safe working conditions in order to safeguard onsite personnel, visitors, the public, and the environment.

Copies of the accepted plan will be maintained at the Contracting Officer's office and at the job site.

The APP shall be continuously reviewed and amended, as necessary, throughout the life of the contract. Unusual or high-hazard activities not identified in the original APP shall be incorporated in the plan as they are discovered.

1.8.1 EM 385-1-1 Contents

In addition to the requirements outlines in Appendix A of USACE EM 385-1-1, the following is required:

a. Names and qualifications (resumes including education, training, experience and certifications) of all site safety and health personnel designated to perform work on this project to include the designated site safety and health officer and other competent and qualified personnel to be. The duties of each position shall be specified.

b. Qualifications of competent and of qualified persons. As a minimum, competent persons shall be designated and qualifications submitted for each of the following major areas: excavation; scaffolding; fall protection; hazardous energy; confined space; health hazard recognition, evaluation and control of chemical, physical and biological agents; personal protective equipment and clothing to include selection, use and maintenance.

c. Confined Space Entry Plan. Develop a confined space entry plan in accordance with USACE EM 385-1-1, Section 06.I, and any other federal, state and local regulatory requirements identified in this contract. Identify the qualified person's name and qualifications, training, and experience. Delineate the qualified person's authority to direct work stoppage in the event of hazardous conditions. Include procedure for rescue by contractor personnel and the coordination with emergency responders. (If there is no confined space work, include a statement that no confined space work exists and none will be created.)

d. Crane Critical Lift Plan. Prepare and sign weight handling critical lift plans for lifts over 75 percent of the capacity of the crane or hoist (or lifts over 50 percent of the capacity of a barge mounted mobile crane's hoists) at any radius of lift; lifts involving more than one crane or hoist; lifts of personnel; and lifts involving non-routine rigging or operation, sensitive equipment, or unusual safety risks. The plan shall be submitted 15 calendar days prior to on-site work and include the requirements of USACE EM 385-1-1, paragraph 16.C.18. and the following:

(1) For lifts of personnel, the plan shall demonstrate compliance with the requirements of EM 385-1-1, Section 22.F.

(2) For barge mounted mobile cranes, barge stability calculations identifying barge list and trim based on anticipated loading; and load charts based on calculated list and trim. The amount of list and trim shall be within the crane manufacturer's requirements.

e. Fall Protection and Prevention (FP&P) Plan. The plan shall be site specific and address all fall hazards in the work place and during different phases of construction. It shall address how to protect and prevent workers from falling to lower levels when they are exposed to fall hazards above 1.8 m (6 feet). A qualified person for fall protection shall prepare and sign the plan. The plan shall include fall protection and prevention systems, equipment and methods employed for every phase of work, responsibilities, assisted rescue, self-rescue and evacuation procedures, training requirements, and monitoring methods. Fall Protection and Prevention Plan shall be revised every six months for lengthy projects, reflecting any changes during the course of construction due to changes in personnel, equipment, systems or work habits. The accepted Fall Protection and Prevention Plan shall be kept and maintained at the job site for the duration of the project. The Fall Protection and Prevention Plan shall be included in the Accident Prevention Plan (APP).

1.9 ACTIVITY HAZARD ANALYSIS (AHA)

The Activity Hazard Analysis (AHA) format shall be in accordance with USACE EM 385-1-1, and shall be written in both English and the host nation language. Submit the AHA for review at least 15 calendar days prior to the start of each phase. Format subsequent AHAs as amendments to the APP. The analysis should be used during daily inspections to ensure the implementation and effectiveness of the activity's safety and health controls.

The AHA list will be reviewed periodically (at least monthly) at the Contractor supervisory safety meeting and updated as necessary when procedures, scheduling, or hazards change.

The activity hazard analyses shall be developed using the project schedule as the basis for the activities performed. Any activities listed on the project schedule will require an AHA. The AHAs will be developed by the contractor, supplier or subcontractor and provided to the prime contractor for submittal to the Contracting Officer.

1.10 DISPLAY OF SAFETY INFORMATION

Within 1 calendar day after commencement of work, erect a safety bulletin board at the job site. The safety bulletin board shall include information and be maintained as required by EM 385-1-1, section 01.A.06.

1.11 SITE SAFETY REFERENCE MATERIALS

Maintain safety-related references applicable to the project. Maintain applicable equipment manufacturer's manuals.

1.12 EMERGENCY MEDICAL TREATMENT

Contractors will arrange for their own emergency medical treatment. The Government has no responsibility to provide emergency medical treatment. Military medical clinics may provide emergency treatment for serious injuries; the contractor is responsible for coordination with the local military medical clinic prior to mobilization.

1.13 REPORTS

1.13.1 Accident Reports

For recordable injuries and illnesses, and property damage accidents resulting in at least $2,000 in damages, the Prime Contractor shall conduct an accident investigation to establish the root cause(s) of the accident, complete the USACE Accident Report Form 3394 and provide the report to the Contracting Officer within 5 calendar day(s) of the accident. The Contracting Officer will provide copies of any required or special forms.

1.13.2 Accident Notification

Notify the Contracting Officer as soon as practical, but not later than four hours, after any accident meeting the definition of Recordable Injuries or Illnesses or High Visibility Accidents, property damage equal to or greater than $2,000. Information shall include contractor name; contract title; type of contract; name of activity, installation or location where accident occurred; date and time of accident; names of personnel injured; extent of property damage, if any; extent of injury, if known, and brief description of accident (to include type of construction equipment used, PPE used, etc.). Preserve the conditions and evidence on the accident site until the Government investigation team arrives on-site and Government investigation is conducted.

1.13.3 Monthly Exposure Reports

Monthly exposure reporting to the Contracting Officer is required to be attached to the monthly billing request. This report is a compilation of employee-hours worked each month for all site workers, both prime and subcontractor. The Contracting Officer will provide copies of any special forms.

1.13.4 Crane Reports

Submit crane inspection reports required in accordance with USACE EM 385-1-1, Appendix H and as specified herein with Daily Reports of Inspections.

1.14 HOT WORK

Prior to performing "Hot Work" (welding, cutting, etc.) or operating other flame-producing/spark producing devices, a written permit shall be requested from the Installation. CONTRACTORS ARE REQUIRED TO MEET ALL CRITERIA BEFORE A PERMIT IS ISSUED. The Contractor will provide at least two (2) six kilogram ABC rated extinguishers for normal "Hot Work". All extinguishers shall be

current inspection tagged, approved safety pin and tamper resistant seal. It is also mandatory to have a designated FIRE WATCH for any "Hot Work" done at this activity. The Fire Watch shall be trained in fire fighting techniques and remain on-site for a minimum of 120 minutes after completion of the task or as specified on the hot work permit.

When starting work in the facility, Contractors shall require their personnel to familiarize themselves with the location of the nearest fire alarm boxes and place in memory the emergency phone numbers. ANY FIRE, NO MATTER HOW SMALL, SHALL BE REPORTED TO THE RESPONSIBLE FIRE DIVISION/DEPARTMENT IMMEDIATELY.

PART 2 PRODUCTS

Not used.

PART 3 EXECUTION

3.1 CONSTRUCTION AND/OR OTHER WORK

Before initiation of work at the job site, an accident prevention plan, written by the Contractor for the specific work and hazards of the contract and implementing in detail the pertinent requirements of EM 385-1-1, will be reviewed and found acceptable by designated Government personnel. Specific requirements for development of the accident prevention plan are found in sections 01.A and Appendix A of EM 385-1-1.

Before beginning each activity involving a type of work presenting hazards not experienced in previous project operations or where a new work crew or subcontractor is to perform the work, activity hazard analysis (AHA) shall be prepared by the Contractor performing the work activity. See paragraph 01.A.09 of EM 385-1-1.

The Contractor shall require subcontractors to submit their plan of operations showing methods they propose to use in accomplishing major phases of work.

The Contractor shall be prepared to discuss the plans in conferences convened by the Contracting Officer prior to starting work on each major phase of operation. Plans shall include all pertinent information such as layout of haul roads, access roads, storage areas, electrical distribution lines, methods of providing minimum exposure to overhead loads, and methods of access to work areas. The plan for accomplishing the initial work phase shall be submitted within 15 calendar days after award of the contract. Plans for subsequent major phases of work shall be submitted not later than 15 calendar days prior to initiation of work on each major phase.

All areas where construction, demolition, alteration, building, or similarly related activities take place, all workers shall have the following minimum personal protective clothing and equipment:

1. Short sleeve shirt.
2. Long trousers.
3. Steel-toed safety boots.
4. Hard hat.

3.1.1 Falling Object Protection

All areas must be barricaded to safeguard employees. When working overhead, barricade the area below to prevent entry by unauthorized employees. Construction warning tape and signs shall be posted so they are clearly visible from all possible access points. When employees are working overhead all tools and equipment shall be secured so that they will not fall. When using guardrail as

falling object protection, all openings shall be small enough to prevent passage of potential falling objects.

3.1.2 Hazardous Material Use

Each hazardous material must receive approval prior to being brought onto the job site or prior to any other use in connection with this contract. Allow a minimum of 10 working days for processing of the request for use of a hazardous material. Any work or storage involving hazardous chemicals or materials must be done in a manner that will not expose Government or Contractor employees to any unsafe or unhealthful conditions. Adequate protective measures must be taken to prevent Government or Contractor employees from being exposed to any hazardous condition that could result from the work or storage. The Prime Contractor shall keep a complete inventory of hazardous materials brought onto the work-site. Approval by the Contracting Officer of protective measures and storage area is required prior to the start of the work.

3.1.3 Hazardous Material Exclusions

Notwithstanding any other hazardous material used in this contract, radioactive materials or instruments capable of producing ionizing/non-ionizing radiation (with the exception of radioactive material and devices used in accordance with USACE EM 385-1-1 such as nuclear density meters for compaction testing and laboratory equipment with radioactive sources) as well as materials which contain asbestos, mercury or polychlorinated biphenyls, di-isocynates, lead-based paint are prohibited. The Contracting Officer, upon written request by the Contractor, may consider exceptions to the use of any of the above excluded materials.

3.1.4 Unforeseen Hazardous Material

The design should have identified materials such as PCB, lead paint, and friable and non-friable asbestos. If material, not indicated, that may be hazardous to human health upon disturbance during construction operations is encountered, stop that portion of work and notify the Contracting Officer immediately. Within 14 calendar days the Government will determine if the material is hazardous. If material is not hazardous or poses no danger, the Government will direct the Contractor to proceed without change. If material is hazardous and handling of the material is necessary to accomplish the work, the Government will issue a modification pursuant to "FAR 52.243-4, Changes" and "FAR 52.236-2, Differing Site Conditions."

3.2 FALL HAZARD PROTECTION AND PREVENTION PROGRAM

The Contractor shall establish a fall protection and prevention program, for the protection of all employees exposed to fall hazards. The program shall include company policy, identify responsibilities, education and training requirements, fall hazard identification, prevention and control measures, inspection, storage, care and maintenance of fall protection equipment and rescue and evacuation procedures.

3.2.1 Training

The Contractor shall institute a fall protection training program. As part of the Fall Hazard Protection and Prevention Program, the Contractor shall provide training for each employee who might be exposed to fall hazards. A competent person for fall protection shall provide the training. Training requirements shall be in accordance with USACE EM 385-1-1, section 21.A.16.

3.2.2 Fall Protection Equipment and Systems

The Contractor shall enforce use of the fall protection equipment and systems designated for each specific work activity in the Fall Protection and Prevention Plan and/or AHA at all times when an employee is exposed to a fall hazard. Employees shall be protected from fall hazards as specified in EM 385-1-1, section 21. In addition to the required fall protection systems, safety skiff, personal floatation devices, life rings etc., are required when working above or next to water in accordance with USACE EM 385-1-1, paragraphs 05.H. and 05.I. Personal fall arrest systems are required when working from an articulating or extendible boom, swing stages, or suspended platform. In addition, personal fall arrest systems are required when operating other equipment such as scissor lifts if the work platform is capable of being positioned outside the wheelbase. The need for tying-off in such equipment is to prevent ejection of the employee from the equipment during raising, lowering, or travel. Fall protection must comply with USACE EM 385-1-1 and host nation requirements, whichever is more stringent.

3.2.2.1 Personal Fall Arrest Equipment

Personal fall arrest equipment, systems, subsystems, and components shall meet ANSI Z359.1 or European Union equivalent. Only a full-body harness with a shock-absorbing lanyard or self-retracting lanyard is an acceptable personal fall arrest body support device. Body belts may only be used as a positioning device system (for uses such as steel reinforcing assembly and in addition to an approved fall arrest system). Harnesses shall have a fall arrest attachment affixed to the body support (usually a Dorsal D-ring) and specifically designated for attachment to the rest of the system. Only locking snap hooks and carabiners shall be used. Webbing, straps, and ropes shall be made of synthetic fiber. The maximum free fall distance when using fall arrest equipment shall not exceed 1.8 m (6 feet). The total fall distance and any swinging of the worker (pendulum-like motion) that can occur during a fall shall always be taken into consideration when attaching a person to a fall arrest system.

3.2.3 Fall Protection for Roofing Work

Fall protection controls shall be implemented based on the type of roof being constructed and work being performed. The roof area to be accessed shall be evaluated for its structural integrity including weight-bearing capabilities for the projected loading.

a. Low Sloped Roofs:

(1) For work within 1.8 m (6 feet) of an edge, on low-slope roofs, personnel shall be protected from falling by use of personal fall arrest systems, guardrails, or safety nets. A safety monitoring system is not adequate fall protection and is not authorized.

(2) For work greater than 1.8 m (6 feet) from an edge, warning lines shall be erected and installed in accordance with USACE EM 385-1-1.

b. Steep-Sloped Roofs: Work on steep-sloped roofs requires a personal fall arrest system, guardrails with toe-boards, or safety nets. This requirement also includes residential or housing type construction.

3.2.4 Existing Anchorage

Existing anchorages, to be used for attachment of personal fall arrest equipment, shall be certified (or re-certified) by a qualified person for fall protection in accordance with ANSI Z359.1 or European Union equivalent. Exiting horizontal lifeline anchorages shall be certified (or re-certified) by a registered professional engineer with experience in designing horizontal lifeline systems.

3.2.5 Horizontal Lifelines

Horizontal lifelines shall be designed, installed, certified and used under the supervision of a qualified person for fall protection as part of a complete fall arrest system which maintains a safety factor of 2.

3.2.6 Guardrails and Safety Nets

Guardrails and safety nets shall be designed, installed and used in accordance with EM 385-1-1 or Host Nation requirements, whichever is more stringent.

3.2.7 Rescue and Evacuation Procedures

When personal fall arrest systems are used, the contractor must ensure that the mishap victim can self-rescue or can be rescued promptly should a fall occur. A Rescue and Evacuation Plan shall be prepared by the contractor and include a detailed discussion of the following: methods of rescue; methods of self-rescue; equipment used; training requirement; specialized training for the rescuers; procedures for requesting rescue and medical assistance; and transportation routes to a medical facility. The Rescue and Evacuation Plan shall be included in the Activity Hazard Analysis (AHA) for the phase of work, in the Fall Protection and Prevention (FP&P) Plan, and the Accident Prevention Plan (APP).

3.3 SCAFFOLDING

Employees shall be provided with a safe means of access to the work area on the scaffold. Climbing of any scaffold braces or supports not specifically designed for access is prohibited. Access to scaffold platforms greater than 6 m in height shall be accessed by use of a scaffold stair system. Vertical ladders commonly provided by scaffold system manufacturers shall not be used for accessing scaffold platforms greater than 6 m in height. The use of an adequate gate is required. Contractor shall ensure that employees are qualified to perform scaffold erection and dismantling. Do not use scaffold without the capability of supporting at least four times the maximum intended load or without appropriate fall protection as delineated in the accepted fall protection and prevention plan. Stationary scaffolds must be attached to structural building components to safeguard against tipping forward or backward. Special care shall be given to ensure scaffold systems are not overloaded. Side brackets used to extend scaffold platforms on self-supported scaffold systems for the storage of material is prohibited. The first tie-in shall be at the height equal to 4 times the width of the smallest dimension of the scaffold base. Work platforms shall be placed on mud sills. Scaffold or work platform erectors shall have fall protection during the erection and dismantling of scaffolding or work platforms that are more than six feet. Delineate fall protection requirements when working above six feet or above dangerous operations in the Fall Protection and Prevention (FP&P) Plan and Activity Hazard Analysis (AHA) for the phase of work.

3.4 EQUIPMENT

3.4.1 Material Handling Equipment

a. Material handling equipment such as forklifts shall not be modified with work platform attachments for supporting employees unless specifically delineated in the manufacturer's printed operating instructions.

b. The use of hooks on equipment for lifting of material must be in accordance with manufacturer's printed instructions.

c. Operators of forklifts or power industrial trucks shall be trained/licensed in accordance with Host Nation requirements.

3.4.2 Weight Handling Equipment

a. Cranes and derricks shall be equipped as specified in EM-385-1-1 section 16.

b. The Contractor shall notify the Contracting Officer 15 days in advance of any cranes entering the activity so that necessary quality assurance spot checks can be coordinated. Contractor's operator shall remain with the crane during the spot check.

c. The Contractor shall comply with the crane manufacturer's specifications and limitations for erection and operation of cranes and hoists used in support of the work. Erection shall be performed under the supervision of a designated person. All testing shall be performed in accordance with the manufacturer's recommended procedures.

d. Under no circumstance shall a Contractor make a lift at or above 90% of the cranes rated capacity in any configuration.

e. When operating in the vicinity of overhead transmission lines, operators and riggers shall be alert to this special hazard and shall follow the requirements of USACE EM 385-1-1 section 11.

f. Crane suspended personnel work platforms (baskets) shall not be used unless the Contractor proves to the satisfaction of the Contracting Officer that using any other access to the work location would provide a greater hazard to the workers or is impossible. Personnel shall not be lifted with a line hoist or friction crane.

g. Portable fire extinguishers shall be inspected, maintained, and recharged.

h. All employees shall be kept clear of loads about to be lifted and of suspended loads.

i. The Contractor shall use cribbing when performing lifts on outriggers.

j. The crane hook/block must be positioned directly over the load. Side loading of the crane is prohibited.

k. A physical barricade must be positioned to prevent personnel from entering the counterweight swing (tail swing) area of the crane.

l. Certification records which include the date of inspection, signature of the person performing the inspection, and the serial number or other identifier of the crane that was inspected shall always be available for review by Contracting Officer personnel.

m. Written reports listing the load test procedures used along with any repairs or alterations performed on the crane shall be available for review by Contracting Officer personnel.

n. Certify that all crane operators have been trained in proper use of all safety devices (e.g. anti-two block devices).

o. Take steps to ensure that wind speed does not contribute to loss of control of the load during lifting operations. Prior to conducting lifting operations the contractor shall set a maximum wind speed at which a crane can be safely operated based on the equipment being used, the load being lifted, experience of operators and riggers, and hazards on the work site. This maximum wind speed determination shall be included as part of the activity hazard analysis plan for that operation.

3.5 EXCAVATIONS

The competent person for excavations performed as a result of contract work shall be on-site when excavation work is being performed, and shall inspect, and document the excavations daily prior to

entry by workers. The competent person must evaluate all hazards, including atmospheric, that may be associated with the work, and shall have the resources necessary to correct hazards promptly.

3.5.1 Utility Locations

Prior to any excavation, all underground utilities in the work area must be positively identified by the contractor utilizing a) a private utility locating service in addition to any station locating service, and/or b) a metal and/or cable-detecting device along the route of the excavation. All underground utilities discovered will be flagged a distance of one-half (1/2) meter on each side of the location, and any markings made during the utility investigation must be maintained throughout the contract.

Damage occurring to existing utilities, when the above procedures are not followed, will be repaired at the Contractor's expense.

3.5.2 Utility Location Verification

The Contractor must physically verify underground utility locations by hand digging using wood or fiberglass handled tools when any adjacent construction work is expected to come within three feet of the underground system. Digging within 0.61 m (2 feet) of a known utility must not be performed by means of mechanical equipment; hand digging shall be used. If construction is parallel to an existing utility the utility shall be exposed by hand digging every 30.5 m (100 feet) if parallel within 1.5 m (5 feet) of the excavation.

3.5.3 Shoring Systems

Trench and shoring systems must be identified in the accepted safety plan and AHA. Manufacture tabulated data and specifications or registered engineer tabulated data for shoring or benching systems shall be readily available on-site for review. Job-made shoring or shielding shall have the registered professional engineer stamp, specifications, and tabulated data. Extreme care must be used when excavating near direct burial electric underground cables.

3.5.4 Trenching Machinery

Trenching machines with digging chain drives shall be operated only when the spotters/laborers are in plain view of the operator. Operator and spotters/laborers shall be provided training on the hazards of the digging chain drives with emphasis on the distance that needs to be maintained when the digging chain is operating. Documentation of the training shall be kept on file at the project site.

3.6 UTILITIES WITHIN CONCRETE SLABS

Utilities located within concrete slabs or pier structures, bridges, and the like, are extremely difficult to identify due to the reinforcing steel used in the construction of these structures. Whenever contract work involves concrete chipping, saw cutting, or core drilling, the existing utility location must be coordinated with station utility departments in addition to a private locating service. Outages to isolate utility systems shall be used in circumstances where utilities are unable to be positively identified. The use of historical drawings does not alleviate the contractor from meeting this requirement.

3.7 ELECTRICAL

3.7.1 Conduct of Electrical Work

Underground electrical spaces must be certified safe for entry before entering to conduct work. Cables that will be cut must be positively identified and de-energized prior to performing each cut.

Positive cable identification must be made prior to submitting any outage request for electrical systems. Arrangements are to be coordinated with the Contracting Officer and Station Utilities for identification. The Contracting Officer will not accept an outage request until the Contractor satisfactorily documents that the circuits have been clearly identified. Perform all high voltage cable cutting remotely using hydraulic cutting tool. When racking in or live switching of circuit breakers, no additional person other than the switch operator will be allowed in the space during the actual operation. Plan so that work near energized parts is minimized to the fullest extent possible. Use of electrical outages clear of any energized electrical sources is the preferred method. When working in energized substations, only qualified electrical workers shall be permitted to enter. When work requires Contractor to work near energized circuits as defined by the NFPA 70, high voltage personnel must use personal protective equipment that includes, as a minimum, electrical hard hat, safety shoes, insulating gloves with leather protective sleeves, fire retarding shirts, coveralls, face shields, and safety glasses. In addition, provide electrical arc flash protection for personnel as required by NFPA 70E. Insulating blankets, hearing protection, and switching suits may also be required, depending on the specific job and as delineated in the Contractor's AHA.

3.7.2 Portable Extension Cords

Portable extension cords shall be sized in accordance with manufacturer ratings for the tool to be powered and protected from damage. All damaged extension cords shall be immediately removed from service. Portable extension cords shall meet the requirements of NFPA 70 or European Union equivalent.

3.8 WORK IN CONFINED SPACES

The Contractor shall comply with the requirements in Section 06.I of USACE EM 385-1-1. Any potential for a hazard in the confined space requires a permit system to be used.

a. Entry Procedures. Prohibit entry into a confined space by personnel for any purpose, including hot work, until the qualified person has conducted appropriate tests to ensure the confined or enclosed space is safe for the work intended and that all potential hazards are controlled or eliminated and documented. (See Section 06.I.06 of USACE EM 385-1-1 for entry procedures). All hazards pertaining to the space shall be reviewed with each employee during review of the AHA.

b. Forced air ventilation is required for all confined space entry operations and the minimum air exchange requirements must be maintained to ensure exposure to any hazardous atmosphere is kept below its' action level.

c. Ensure the use of rescue and retrieval devices in confined spaces greater than 1.5 m (5 feet) in depth. Conform to Sections 06.I.08, 06.I.09 and 06.I.10 of USACE EM 385-1-1.

d. Sewer wet wells require continuous atmosphere monitoring with audible alarm for toxic gas detection.

e. Include training information for employees who will be involved as entrants and attendants for the work. Conform to Section 06.I.07 of USACE EM 385-1-1.

f. Daily Entry Permit. Post the permit in a conspicuous place close to the confined space entrance.

3.9 CRYSTALLINE SILICA

Grinding, abrasive blasting, and foundry operations of construction materials containing crystalline silica, shall comply with USACE EM 385-1-1, Appendix C. The Contractor shall develop and implement effective exposure control and elimination procedures to include dust control systems,

engineering controls, and establishment of work area boundaries, as well as medical surveillance, training, air monitoring, and personal protective equipment.

3.10 DEMOLITION

3.101.1 Demolition Plan

The Contractor shall submit a written demolition plan for all demolition work to be carried on the site. In addition, the demolition plan shall be signed by a Professional Registered Engineer and meet the requirements of the Corps of Engineers Safety and Health Manual, EM 385-1-1, section 23. The demolition plan shall be submitted to the COR at least 1 week before the beginning of the work, including structural calculations for the demolition, if necessary. The demolition work shall not begin before the Contractor has received a written approval from the COR.

3.12.1 Protection of Personnel

During the demolition work the Contractor shall continuously evaluate the condition of the structure being demolished and take immediate action to protect all personnel working in and around the demolition site. No area, section, or component of floors, roofs, walls, columns, pilasters, or other structural element will be allowed to be left standing without sufficient bracing, shoring, or lateral support to prevent collapse or failure while workers remove debris or perform other work in the immediate area.

3.10.1 Protection of Structures

Floors, roofs, walls, columns, pilasters, and other structural components that are designed and constructed to stand without lateral support or shoring, and are determined to be in stable condition, shall remain standing without additional bracing, shoring, or lateral support until demolished, unless directed otherwise by the COR. The Contractor shall ensure that no elements determined to be unstable are left unsupported and shall be responsible for placing and securing bracing, shoring, or lateral supports as may be required as a result of any cutting, removal, or demolition work performed under this contract.

Interior concrete or masonry walls shall be demolished from the top down unless a Registered Engineer can demonstrate that an alternate method poses no additional safety hazards

3.11 HOUSEKEEPING

3.11.1 Clean-Up

The Contractor shall be responsible for cleaning up. The Contractor shall require his personnel to keep the immediate work site clean of all dirt and debris resulting from work under this contract. Accumulated dirt and debris shall be hauled off and disposed of in accordance with local law and at least once a week by the Contractor. Additionally, all debris in work areas shall be cleaned up daily or more frequently if necessary. Construction debris may be temporarily located in an approved location, however garbage accumulation must be removed each day.

Stairwells used by the Contractor during execution of work shall be cleaned daily. Cloths, mops, and brushes containing combustible materials shall be disposed of or stored outside of the buildings in tight covered metal containers. Paints and thinners shall not be poured into inlets of the interior or exterior sewage system. Paint, stains, and other residues on adjacent surfaces or fixtures caused by the Contractor shall be carefully removed and cleaned to original finish. Upon completion of the work, the Contractor shall remove all construction equipment, materials and debris resulting from the work. The entire work site and the area used by Contractor personnel shall be left clean.

ATTACHMENT

STR 01525O – SAFETY AND OCCUPATIONAL HEALTH PHASING PLAN

- End of Section -

SPECIFICATION SECTION 01770

CLOSEOUT PROCEDURES

PART 1: GENERAL

1.1 SUBMITTALS

Government approval is required for submittals with a "G" designation; submittals not having a "G" designation are for information only. When used, a designation following the "G" designation identifies the office that will review the submittal for the Government. The following shall be submitted in accordance with Section 01335 SUBMITTAL PROCEDURES:

SD-10 Operation and Maintenance Data
Equipment/Product Warranty List; G
Submit Data Package 1 in accordance with Section 01781 OPERATION AND MAINTENANCE DATA.

SD-11 Closeout Submittals
As-Built Drawings; G
Record Of Materials; G
Equipment/Product Warranty Tag; G

1.2 PROJECT RECORD DOCUMENTS

1.2.1 As-Built Drawings

As built drawings shall be submitted in accordance with Section 01780A CLOSEOUT SUBMITTALS

1.2.2 As-Built Record of Materials

Furnish a record of materials.

Where several manufacturers' brands, types, or classes of the item listed have been used in the project, designate specific areas where each item was used. Designations shall be keyed to the areas and spaces depicted on the contract drawing. Furnish the record of materials used in the following format:

MATERIALS DESIGNATION	SPECIFICATION	MANUFACTURER	MATERIALS USED (MANUFACTURER'S DESIGNATION)	WHERE USED

1.3 EQUIPMENT/PRODUCT WARRANTIES

1.3.1 Equipment/Product Warranty List

The Contractor shall develop a warranty management plan which shall contain information relevant to the clause Warranty of Construction. At least 30 days before the planned pre-warranty conference, the Contractor shall submit the warranty management plan for Government approval. The warranty management plan shall include all required actions and documents to assure that the Government receives all warranties to which it is entitled. The plan shall be in narrative form and contain sufficient detail to render it suitable for use by future maintenance and repair personnel, whether tradesmen, or of engineering background, not necessarily familiar with this contract. The term "status" as indicated below shall include due date and whether item has been submitted or was accomplished. Warranty information made available during the construction phase shall be submitted to the Contracting Officer for approval prior to each monthly pay estimate. Approved information shall be assembled in a binder and shall be turned over to the Government upon acceptance of the work. The construction warranty period shall begin on the date of project acceptance and shall continue for the full product warranty period. A joint 4 month and 9 month warranty inspection shall be conducted, measured from time of acceptance, by the Contractor, Contracting Officer and the Customer Representative. Information contained in the warranty management plan shall include, but shall not be limited to, the following:

a. Roles and responsibilities of all personnel associated with the warranty process, including points of contact and telephone numbers within the organizations of the Contractors, subcontractors, manufacturers or suppliers involved.

b. Listing and status of delivery of all Certificates of Warranty for extended warranty items, to include roofs, HVAC balancing, pumps, motors, transformers, and for all commissioned systems such as fire protection and alarm systems, sprinkler systems, lightning protection systems, etc.

c. A list for each warranted equipment, item, feature of construction or system indicating:

1. Name of item.
2. Model and serial numbers.
3. Location where installed.
4. Name and phone numbers of manufacturers or suppliers.
5. Names, addresses and telephone numbers of sources of spare parts.
6. Warranties and terms of warranty. This shall include one-year overall warranty of construction. Items which have extended warranties shall be indicated with separate warranty expiration dates.
7. Cross-reference to warranty certificates as applicable.
8. Starting point and duration of warranty period.
9. Summary of maintenance procedures required to continue the warranty in force.
10. Cross-reference to specific pertinent Operation and Maintenance manuals.
11. Organization, names and phone numbers of persons to call for warranty service.
12. Typical response time and repair time expected for various warranted equipment.

d. The Contractor's plans for attendance at the 4 and 9 month post-construction warranty inspections conducted by the Government.

e. Procedure and status of tagging of all equipment covered by extended warranties.

f. Copies of instructions to be posted near selected pieces of equipment where operation is critical for warranty and/or safety reasons.

1.3.2 Performance of Warranty Work

In the event the Contractor fails to commence and diligently pursue any construction warranty work required, the Contracting Officer will have the work performed by others, and after completion of the work, will charge the remaining construction warranty funds of expenses incurred by the Government while performing the work, including, but not limited to administrative expenses.

Following oral or written notification of required construction warranty repair work, the Contractor shall respond in a timely manner. Written verification will follow oral instructions. Failure of the Contractor to respond will be cause for the Contracting Officer to proceed against the Contractor.

1.3.3 Pre-Warranty Conference

Prior to contract completion, and at a time designated by the Contracting Officer, the Contractor shall meet with the Contracting Officer to develop a mutual understanding with respect to the requirements of this section. Communication procedures for Contractor notification of construction warranty defects, priorities with respect to the type of defect, reasonable time required for Contractor response, and other details deemed necessary by the Contracting Officer for the execution of the construction warranty shall be established/reviewed at this meeting. In connection with these requirements and at the time of the Contractor's quality control completion inspection, the Contractor shall furnish the name, telephone number and address of a licensed and bonded company which is authorized to initiate and pursue construction warranty work action on behalf of the Contractor. This point of contact will be located within the local service area of the warranted construction, shall be continuously available, and shall be responsive to Government inquiry on warranty work action and status. This requirement does not relieve the Contractor of any of its responsibilities in connection with other portions of this provision.

1.3.4 Warranty Tags

At the time of installation, each warranted item shall be tagged with a durable, oil and water resistant tag approved by the Contracting Officer. Each tag shall be attached with a copper wire and shall be sprayed with a silicone waterproof coating. The date of acceptance and the QC signature shall remain blank until project is accepted for beneficial occupancy. The tag shall show the following information.

a. Type of product/material _____
b. Model number _____
c. Serial number_____
d. Contract number _____
e. Warranty period _____ from _____ to _____
f. Inspector's signature _____
g. Construction Contractor _____
Address _____
Telephone number_____
h. Warranty contact _____
Address _____
Telephone number_____
i. Warranty response time priority code _____
j. WARNING - PROJECT PERSONNEL TO PERFORM ONLY OPERATIONAL MAINTENANCE DURING THE WARRANTY PERIOD.

1.4 MECHANICAL TESTING AND BALANCING

All contract requirements for testing/adjusting/balancing shall be fully completed, including all testing, prior to contract completion date. The time required to complete all testing/adjusting/balancing is included in the allotted calendar days for completion.

1.5 FINAL CLEANING

The premises shall be left broom clean. Stains, foreign substances, and temporary labels shall be removed from surfaces. Carpet and soft surfaces shall be vacuumed. Equipment and fixtures shall be cleaned to a sanitary condition. Filters of operating equipment shall be replaced. Debris shall be removed from roofs, drainage systems, gutters, and downspouts. Paved areas shall be swept and landscaped areas shall be raked clean. The site shall have waste, surplus materials, and rubbish removed. The project area shall have temporary structures, barricades, project signs, and construction facilities removed. A list of completed clean-up items shall be submitted on the day of final inspection.

PART 2 PRODUCTS

Not used.

PART 3 EXECUTION

Not used.

-- End of Section --

SECTION 01780A

CLOSEOUT SUBMITTALS

PART 1 GENERAL

1.1 SUBMITTALS

Government approval is required for submittals with a "G" designation; submittals not having a "G" designation are for Contractor Quality Control approval. When used, a designation following the "G" designation identifies the office that will review the submittal for the Government. The following shall be submitted in accordance with Section 01335 SUBMITTAL PROCEDURES:

SD-02 Shop Drawings

As-Built Drawings

Drawings showing final as-built conditions of the project. The local language of Afghanistan shall be added to project As-Built drawings. The final CADD as-built drawings shall consist of **3 sets** of electronic CADD drawing files in the specified format, and **1 half-size and 1 full-size paper copies** of the approved as-built drawings.

SD-03 Product Data

As-Built Record of Equipment and Materials

Two copies of the record listing the as-built materials and equipment incorporated into the construction of the project.

Warranty Management Plan

One set of the warranty management plan containing information relevant to the warranty of materials and equipment incorporated into the construction project, including the starting date of warranty of construction. The Contractor shall furnish with each warranty the name, address, and telephone number of each of the guarantor's representatives nearest to the project location.

Warranty Tags

Two record copies of the warranty tags showing the layout and design.

Final Cleaning

Two copies of the listing of completed final clean-up items.

1.2 PROJECT RECORD DOCUMENTS

1.2.1 As-Built Drawings

This paragraph covers as-built drawings complete, as a requirement of the contract. The terms "drawings," "contract drawings," "drawing files," "working as-built drawings" and "final as-built drawings" refer to contract drawings which are revised to be used for final as-built drawings.

1.2.1.1 Government Furnished Materials

One set of electronic CADD files in the specified software and format revised to reflect all bid amendments will be provided by the Government at the preconstruction conference for projects requiring CADD file as-built drawings.

1.2.1.2 Working As-Built and Final As-Built Drawings

a. The Contractor shall revise 2 sets of paper drawings by red-line process to show the as-built conditions during the prosecution of the project. These working as-built marked drawings shall be kept current on a weekly basis and at least one set shall be available on the jobsite at all times. Changes from the contract plans which are made in the work or additional information which might be uncovered in the course of construction shall be accurately and neatly recorded as they occur by means of details and notes. Final as-built drawings shall be prepared after the completion of each definable feature of work as listed in the Contractor Quality Control Plan (Foundations, Utilities, Structural Steel, etc., as appropriate for the project). The working as-built marked prints and final as-built drawings will be jointly reviewed for accuracy and completeness by the Contracting Officer and the Contractor prior to submission of each monthly pay estimate. If the Contractor fails to maintain the working and final as-built drawings as specified herein, the Contracting Officer will deduct from the monthly progress payment an amount representing the

estimated cost of maintaining the as-built drawings. This monthly deduction will continue until an agreement can be reached between the Contracting Officer and the Contractor regarding the accuracy and completeness of updated drawings. The working and final as-built drawings shall show, but shall not be limited to, the following information:

b. The actual location, kinds and sizes of all sub-surface utility lines. In order that the location of these lines and appurtenances may be determined in the event the surface openings or indicators become covered over or obscured, the as-built drawings shall show, by offset dimensions to two permanently fixed surface features, the end of each run including each change in direction. Valves, splice boxes and similar appurtenances shall be located by dimensioning along the utility run from a reference point. The average depth below the surface of each run shall also be recorded.

c. The location and dimensions of any changes within the building structure.

d. Correct grade, elevations, cross section, or alignment of roads, earthwork, structures or utilities if any changes were made from contract plans.

e. Changes in details of design or additional information obtained from working drawings specified to be prepared and/or furnished by the Contractor; including but not limited to fabrication, erection, installation plans and placing details, pipe sizes, insulation material, dimensions of equipment foundations, etc.

f. The topography, invert elevations and grades of drainage installed or affected as part of the project construction.

g. Changes or modifications which result from the final inspection.

h. Where contract drawings or specifications present options, only the option selected for construction shall be shown on the final as-built prints.

i. If borrow material for this project is from sources on Government property, or if Government property is used as a spoil area, the Contractor shall furnish a contour map of the final borrow pit/spoil area elevations.

j. Systems designed or enhanced by the Contractor, such as HVAC controls, fire alarm, fire sprinkler, and irrigation systems.

k. Modifications (change order price shall include the Contractor's cost to change working and final as-built drawings to reflect modifications) and compliance with the following procedures.

(1) Directions in the modification for posting descriptive changes shall be followed.

(2) A Modification Circle shall be placed at the location of each deletion.

(3) For new details or sections which are added to a drawing, a Modification Circle shall be

placed by the detail or section title.

(4) For minor changes, a Modification Circle shall be placed by the area changed on the drawing (each location).

(5) For major changes to a drawing, a Modification Circle shall be placed by the title of the affected plan, section, or detail at each location.

(6) For changes to schedules or drawings, a Modification Circle shall be placed either by the schedule heading or by the change in the schedule.

(7) The Modification Circle size shall be 12.7 mm 1/2 inch diameter unless the area where the circle is to be placed is crowded. Smaller size circle shall be used for crowded areas.

1.2.1.3 Drawing Preparation

The as-built drawings shall be modified as may be necessary to correctly show the features of the project as it has been constructed by bringing the contract set into agreement with approved working as-built prints, and adding such additional drawings as may be necessary. These working as-built marked prints shall be neat, legible and accurate. These drawings are part of the permanent records of this project and shall be returned to the Contracting Officer after approval by the Government. Any drawings damaged or lost by the Contractor shall be satisfactorily replaced by the Contractor at no expense to the Government.

1.2.1.4 Computer Aided Design and Drafting (CADD) Drawings

a. Only personnel proficient in the preparation of CADD drawings shall be employed to modify the contract drawings or prepare additional new drawings. Additions and corrections to the contract drawings shall be equal in quality and detail to that of the originals. Line colors, line weights, lettering, layering conventions, and symbols shall be the same as the original line colors, line weights, lettering, layering conventions, and symbols. If additional drawings are required, they shall be prepared using the specified electronic file format applying the same graphic standards specified for original drawings. The title block and drawing border to be used for any new final as-built drawings shall be identical to that used on the contract drawings. Additions and corrections to the contract drawings shall be accomplished using CADD files. The Contractor will be furnished "as-designed" drawings in AutoCAD Release 2007 or Microstation V8 format compatible with a Windows XP operating system. The electronic files will be supplied on compact disc, read-only memory (CD-ROM). The Contractor shall be responsible for providing all program files and hardware necessary to prepare final as-built drawings.

b. Prior to submittal of the first design submittal involving CADD drawings, the Contractor shall prepare one typical CADD drawing for the project and furnish, via ENG Form 4025, the electronic CADD drawing file for review and approval by the Contracting Officer. All Government comments involving changes to this single drawing shall be accomplished and resubmittal(s) made until the Government is satisfied that all CADD Standards are being followed and all subsequent drawings will also be in compliance with these Standards.

c. CADD colors shall be the "base" colors of red, green, and blue. Color code for changes shall be as follows:

(1) Deletions (red) - Deleted graphic items (lines) shall be colored red with red lettering in notes and leaders.

(2) Additions (Green) - Added items shall be drawn in green with green lettering in notes and leaders.

(3) Special (Blue) - Items requiring special information, coordination, or special detailing or detailing notes shall be in blue.

d. The Contract Drawing files shall be renamed in a manner related to the contract number (i.e., 98-C-10.DGN) as instructed in the Pre-Construction conference. Marked-up changes shall be made only to those renamed files. All changes shall be made on the layer/level as the original item. There shall be no deletions of existing lines; existing lines shall be over struck in red. Additions shall be in green with line weights the same as the drawing. Special notes shall be in blue on layer#63.

e. When final revisions have been completed, the cover sheet drawing shall show the wording "RECORD DRAWING AS-BUILT" followed by the name of the Contractor in letters at least 5 mm 3/16 inch high. All other contract drawings shall be marked either "As-Built" drawing denoting no revisions on the sheet or "Revised As-Built" denoting one or more revisions. Original contract drawings shall be dated in the revision block.

f. After Government approval of all of the working as-built drawings for a phase of work, the Contractor shall prepare the final CADD as-built drawings for that phase of work and submit two sets of full size paper copy prints of these drawings for Government review, comparison with approved red-line marked up drawings, and approval. The Government will promptly return one set of prints annotated with any necessary corrections to the CADD file(s) if corrections are required prior to approval. Within 20 days of substantial completion of all phases of work, the Contractor shall submit the final as-built drawing package for the entire project. The submittal shall consist of one set of electronic files on compact disc, read-only memory (CD-ROM), one set of full size paper prints and one set of the approved working as-built drawings. They shall be complete in all details and identical in form and function to the contract drawing files supplied by the Government. Any transactions or adjustments necessary to accomplish this is the responsibility of the Contractor. The Government reserves the right to reject any drawing files it deems incompatible with the CADD system. Upon approval by the Government of the final as-built drawing package for the entire project, the Contractor shall provide the number of as-built copies noted in Paragraph 1.1 of this Section.

g. Paper prints, drawing files and storage media submitted will become the property of the Government upon final approval. Failure to submit final as-built drawing files and marked prints as specified shall be cause for withholding any payment due the Contractor under this contract. Approval and acceptance of final as-built drawings shall be accomplished before final payment

is made to the Contractor.

1.2.1.5 Payment

No separate payment will be made for as-built drawings required under this contract, and all costs accrued in connection with such drawings shall be considered a subsidiary obligation of the Contractor.

1.2.2 As-Built Record of Equipment and Materials

The Contractor shall furnish one copy of preliminary record of equipment and materials used on the project 15 days prior to final inspection. This preliminary submittal will be reviewed and returned 2 days after final inspection with Government comments. Two sets of final record of equipment and materials shall be submitted 10 days after final inspection. The designations shall be keyed to the related area depicted on the contract drawings. The record shall list the following data:

RECORD OF DESIGNATED EQUIPMENT AND MATERIALS DATA

Description	Specification Section	Manufacturer and Catalog, Model, and Serial Number	Composition and Size	Where Used

1.2.3 Final Approved Shop Drawings

The Contractor shall furnish final approved project shop drawings 30 days after transfer of the completed facility.

1.2.4 Construction Contract Specifications

The Contractor shall furnish final as-built construction contract specifications, including modifications thereto, 30 days after transfer of the completed facility.

1.2.5 Real Property Equipment

The Contractor shall furnish a list of installed equipment furnished under this contract. The list shall include all information usually listed on manufacturer's name plate. The "EQUIPMENT-IN-PLACE LIST" shall include, as applicable, the following for each piece of equipment installed: description of item, location (by room number), model number, serial number, capacity, name and address of manufacturer, name and address of equipment supplier, condition,

spare parts list, manufacturer's catalog, and warranty. A draft list shall be furnished at time of transfer. The final list shall be furnished 30 days after transfer of the completed facility.

1.3 WARRANTY MANAGEMENT

1.3.1 Warranty Management Plan

The Contractor shall develop a warranty management plan which shall contain information relevant to the clause Warranty of Construction. At least 30 days before the planned pre-warranty conference, the Contractor shall submit the warranty management plan for Government approval. The warranty management plan shall include all required actions and documents to assure that the Government receives all warranties to which it is entitled. The plan shall be in narrative form and contain sufficient detail to render it suitable for use by future maintenance and repair personnel, whether tradesmen, or of engineering background, not necessarily familiar with this contract. The term "status" as indicated below shall include due date and whether item has been submitted or was accomplished. Warranty information made available during the construction phase shall be submitted to the Contracting Officer for approval prior to each monthly pay estimate. Approved information shall be assembled in a binder and shall be turned over to the Government upon acceptance of the work. The construction warranty period shall begin on the date of project acceptance and shall continue for the full product warranty period. A joint 4 month and 9 month warranty inspection shall be conducted, measured from time of acceptance, by the Contractor, Contracting Officer and the Customer Representative. Information contained in the warranty management plan shall include, but shall not be limited to, the following:

a. Roles and responsibilities of all personnel associated with the warranty process, including points of contact and telephone numbers within the organizations of the Contractors, subcontractors, manufacturers or suppliers involved.

b. Listing and status of delivery of all Certificates of Warranty for extended warranty items, to include roofs, HVAC balancing, pumps, motors, transformers, and for all commissioned systems such as fire protection and alarm systems, sprinkler systems, lightning protection systems, etc.

c. A list for each warranted equipment, item, feature of construction or system indicating:

1. Name of item.
2. Model and serial numbers.
3. Location where installed.
4. Name and phone numbers of manufacturers or suppliers.
5. Names, addresses and telephone numbers of sources of spare parts.
6. Warranties and terms of warranty. This shall include one-year overall warranty of construction. Items which have extended warranties shall be indicated with separate warranty expiration dates.
7. Cross-reference to warranty certificates as applicable.
8. Starting point and duration of warranty period.
9. Summary of maintenance procedures required to continue the warranty in force.

10. Cross-reference to specific pertinent Operation and Maintenance manuals.
11. Organization, names and phone numbers of persons to call for warranty service.
12. Typical response time and repair time expected for various warranted equipment.

d. The Contractor's plans for attendance at the 4 and 9 month post-construction warranty inspections conducted by the Government.

e. Procedure and status of tagging of all equipment covered by extended warranties.

f. Copies of instructions to be posted near selected pieces of equipment where operation is critical for warranty and/or safety reasons.

1.3.2 Pre-Warranty Conference

Prior to contract completion, and at a time designated by the Contracting Officer, the Contractor shall meet with the Contracting Officer to develop a mutual understanding with respect to the requirements of this section. Communication procedures for Contractor notification of construction warranty defects, priorities with respect to the type of defect, reasonable time required for Contractor response, and other details deemed necessary by the Contracting Officer for the execution of the construction warranty shall be established/reviewed at this meeting. In connection with these requirements and at the time of the Contractor's quality control completion inspection, the Contractor shall furnish the name, telephone number and address of a licensed and bonded company which is authorized to initiate and pursue construction warranty work action on behalf of the Contractor. This point of contact will be located within the local service area of the warranted construction, shall be continuously available, and shall be responsive to Government inquiry on warranty work action and status. This requirement does not relieve the Contractor of any of its responsibilities in connection with other portions of this provision.

1.3.3 Contractor's Response to Construction Warranty Service Requirements

Following oral or written notification by the Contracting Officer, the Contractor shall respond to construction warranty service requirements in accordance with the "Construction Warranty Service Priority List" and the three categories of priorities listed below. The Contractor shall submit a report on any warranty item that has been repaired during the warranty period. The report shall include the cause of the problem, date reported, corrective action taken, and when the repair was completed. If the Contractor does not perform the construction warranty within the timeframes specified, the Government will perform the work and backcharge the construction warranty payment item established.

a. First Priority Code 1. Perform onsite inspection to evaluate situation, and determine course of action within 4 hours, initiate work within 6 hours and work continuously to completion or relief.

b. Second Priority Code 2. Perform onsite inspection to evaluate situation, and determine course of action within 8 hours, initiate work within 24 hours and work continuously to completion or

relief.

c. Third Priority Code 3. All other work to be initiated within 3 work days and work continuously to completion or relief.

d. The "Construction Warranty Service Priority List" is as follows:

Code 1-Air Conditioning Systems
1) Recreational support.
2) Air conditioning leak in part of building, if causing damage.
3) Air conditioning system not cooling properly.

Code 1-Doors
1) Overhead doors not operational, causing a security, fire, or safety problem.
2) Interior, exterior personnel doors or hardware, not functioning properly, causing a security, fire, or safety problem.

Code 3-Doors
1) Overhead doors not operational.
2) Interior/exterior personnel doors or hardware not functioning properly.

Code 1-Electrical
1) Power failure (entire area or any building operational after 1600 hours).
2) Security lights
3) Smoke detectors

Code 2-Electrical
1) Power failure (no power to a room or part of building).
2) Receptacle and lights (in a room or part of building).

Code 3-Electrical
Street lights.

Code 1-Gas
1) Leaks and breaks.
2) No gas to family housing unit or cantonment area.

Code 1-Heat
1) Area power failure affecting heat.
2) Heater in unit not working.

Code 2-Kitchen Equipment
1) Dishwasher not operating properly.
2) All other equipment hampering preparation of a meal.

Code 1-Plumbing

1) Hot water heater failure.
2) Leaking water supply pipes.

Code 2-Plumbing
1) Flush valves not operating properly.
2) Fixture drain, supply line to commode, or any water pipe leaking.
3) Commode leaking at base.

Code 3 –Plumbing
Leaky faucets.

Code 3-Interior
1) Floors damaged.
2) Paint chipping or peeling.
3) Casework.

Code 1-Roof Leaks
Temporary repairs will be made where major damage to property is occurring.

Code 2-Roof Leaks
Where major damage to property is not occurring, check for location of leak during rain and complete repairs on a Code 2 basis.

Code 2-Water (Exterior)
No water to facility.

Code 2-Water (Hot)
No hot water in portion of building listed.

Code 3-All other work not listed above.

1.3.5 Warranty Tags

At the time of installation, each warranted item shall be tagged with a durable, oil and water resistant tag approved by the Contracting Officer. Each tag shall be attached with a copper wire and shall be sprayed with a silicone waterproof coating. The date of acceptance and the QC signature shall remain blank until project is accepted for beneficial occupancy. The tag shall show the following information.

a. Type of product/material_____.

b. Model number_____.

c. Serial number_____.

d. Contract number_____.

e. Warranty period_____from_____to_____.

f. Inspector's signature_____.

g. Construction Contractor_____.
Address_____. Telephone number_____.

h. Warranty contact_____.
Address_____. Telephone number_____.

i. Warranty response time priority code_____.

j. WARNING - PROJECT PERSONNEL TO PERFORM ONLY OPERATIONAL MAINTENANCE DURING THE WARRANTY PERIOD.

1.4 MECHANICAL TESTING, ADJUSTING, BALANCING, AND COMMISSIONING

Prior to final inspection and transfer of the completed facility; all reports, statements, certificates, and completed checklists for testing, adjusting, balancing, and commissioning of mechanical systems shall be submitted to and approved by the Contracting Officer as specified inapplicable technical specification sections.

1.5 OPERATION AND MAINTENANCE MANUALS

Three (3) copies of all Operation and Maintenance (O&M) manuals shall be submitted as follows:

AFGHANISTAN ENGINEER DISTRICT

(1) DHL, FEDEX, UPS or any other courier service:

U.S. Army Corps of Engineers
Afghanistan Engineer District
House # 1, St. #1 West
West Wazir Akbar High School
Behind Amani High School
Kabul, Afghanistan
Attn: Chief, Engineering Branch

Operation manuals and maintenance manuals shall be provided in a common volume, complete, clearly differentiated and separately indexed.

1.6 FINAL CLEANING

The premises shall be left broom clean. Stains, foreign substances, and temporary labels shall be removed from surfaces. Carpet and soft surfaces shall be vacuumed. Equipment and fixtures shall be cleaned to a sanitary condition. Filters of operating equipment shall be replaced. Debris shall be removed from roofs, drainage systems, gutters, and downspouts. Paved areas shall be swept and landscaped areas shall be raked clean. The site shall have waste, surplus materials, and rubbish removed. The project area shall have temporary structures, barricades, project signs, and construction facilities removed. A list of completed clean-up items shall be submitted on the day of final inspection.

PART 2 PRODUCTS (NOT USED)

PART 3 EXECUTION (NOT USED)

-- End of Section -

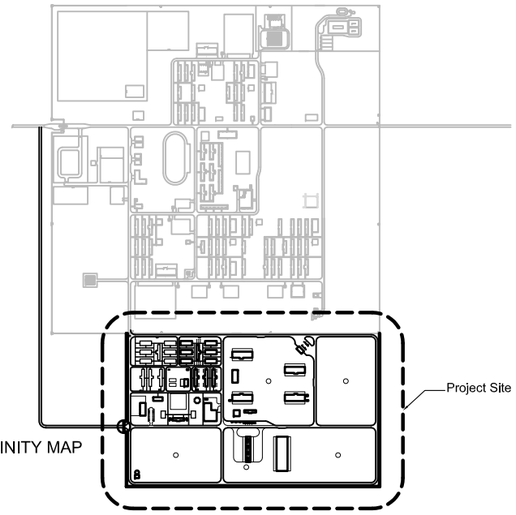

VICINITY MAP

Options:

117	Vehicle Maintenance / 9 Double Bays
122	MWR Gym
123	Exterior Volleyball Court
124	Exterior Volleyball Court
133	Warehouse

Area & Lengths Calculation:

A	84432	sqm
B	59297	sqm
C	55761	sqm
D	47757	sqm
E	46101	sqm
Gross CSB Area	435930	sqm
Perimeter Wall	1920	Linear Meter
Interior Roads	3948	Linear Meter
Site Access Roads	1277	Linear Meter
WWTP Distance to (142)	1607	Linear Meter Approx.
Power Plant Distance to (142)	1798	Linear Meter Approx.

MASTER PLAN KEY:

100 SERIES CSB PLAN
200 SERIES ESB / RCC FUTURE PLAN

CSB Facilities:

101	Battalion Headquarter Building / Admin
102	DFAC and Fenced Dry Storage Yard
103	Bunker
104	Communication Building
105	Bunker
106	General Warehouse Storage
107	Car Parking
108	Bunker
109	Enlisted Barracks (50 Man Open Bay)
110	Enlisted Barracks (50 Man Open Bay)
111	Enlisted Barracks (50 Man Open Bay)
112	Toilet / Shower / Ablution / Laundry Facility
113	Enlisted Barracks (50 Man Open Bay)
114	Enlisted Barracks (50 Man Open Bay)
115	Enlisted Barracks (50 Man Open Bay)
116	Bunker
117	Vehicle Maintenance 9 Double Bays (Option)
118	Officers Barracks
119	Officers Barracks
120	Officers Barracks
121	Assembly Area
122	MWR / Gym (Option)
123	Volleyball Court (Option)
124	Volleyball Court (Option)
125	Arms Storage Building
126	Security Admin
127	Convoy Assembly Area
128	Main ECP
129	Vehicle Wash Rack
130	Fuel Storage
131	Vehicle Refueling Point
132	Bunker
133	Warehouse (Option)
134	POL Storage Building
135	Bunker
136	Vehicle Maintenance 9 Double Bays
137	Vehicle Maintenance 9 Double Bays
138	Organic Vehicle Maintenance 9 Double Bays
139	GSE, Communication, Armament Maintenance Facility
140	Well
141	Pump House
142	Utility Access Point to Garrison

ESB / RCC Future Facilities:

201	ESB Administration
202	RCC Administration
203	Gym Expansion
204	Bankers
205	ESB / RCC Barracks
206	ESB / RCC Barracks
207	ESB / RCC Barracks
108	Toilet / Shower / Ablution / Laundry Facility
209	ESB / RCC Barracks
210	ESB / RCC Barracks
211	ESB / RCC Barracks
212	Bunker
213	ESB / RCC Officers Barracks
214	ESB / RCC Officers Barracks
215	ESB / RCC Officers Barracks
216	The Mosque

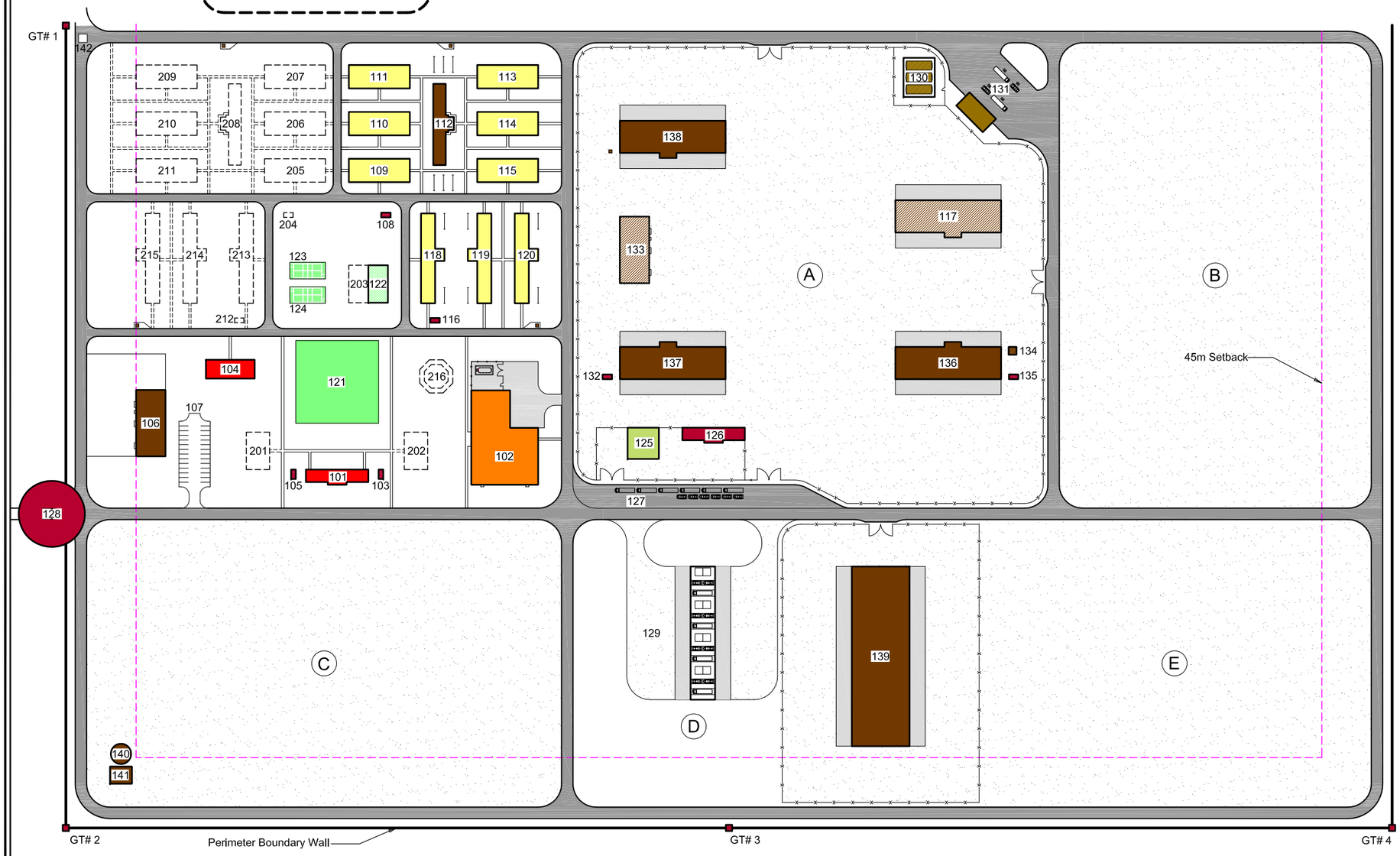

Legend:

- Administration
- Housing
- D-FAC
- MWR
- Supporting Facilities
- Option
- Armory/Ammunition
- Security
- Fuel
- Future Facilities
- Clothes Dry
- Trash Collection Point

0 25 50 100 150 Meter

SCALE: 1:3000
DATE: 26/03/2009
FIGURE: xxxxxxxxx

AFGHAN NATIONAL SECURITY FORCE
Comprehensive Plan for Facilities Development

Corps Support Battalion (CSB)
Herat, Afghanistan
Conceptual Master Plan

REVISION:
DESIGNED: A.Jawed Ashna
DRAWN: A.Jawed Ashna
CHECKED: Robin Witten
IN CHARGE: David Wheeler
PROJECT: 6311-06-0060

C:\All Documents\1. Official Documents\CSB\CSB Herat\Cad\CSB Herat 4.dwg 03/26/2009 4:01pm CAD_5

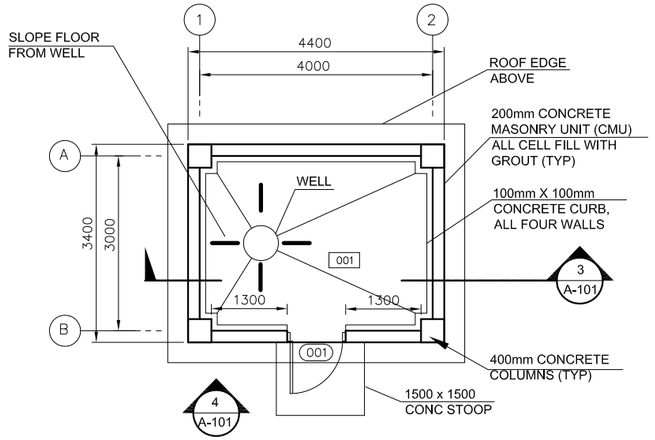

1 A-101 FLOOR PLAN
SCALE = 1:50

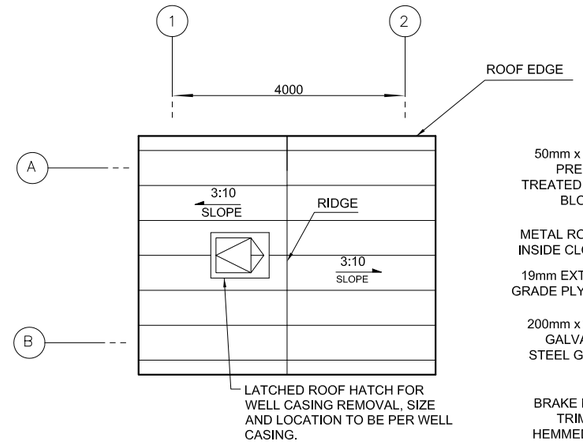

2 A-101 ROOF PLAN
SCALE = 1:50

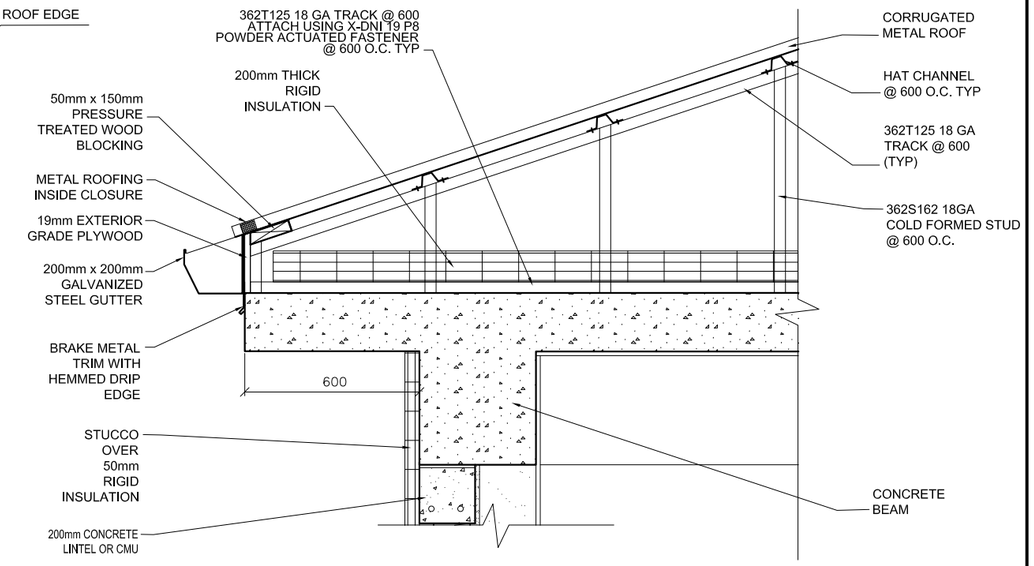

5 A-101 EAVE DETAIL
SCALE = N.T.S.

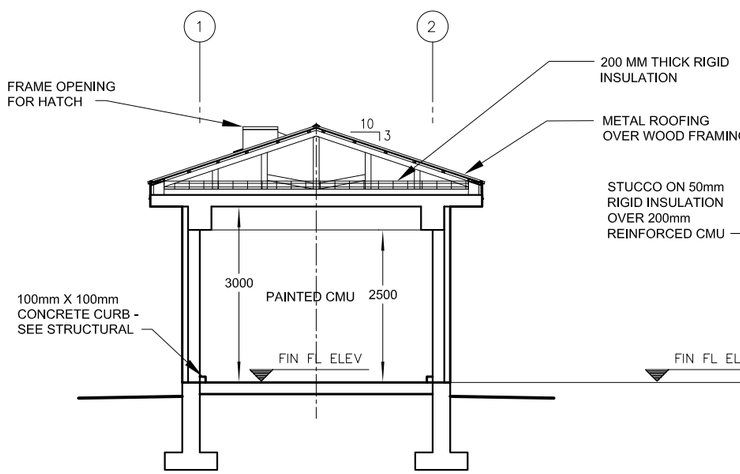

3 A-101 BUILDING SECTION
SCALE = 1:100

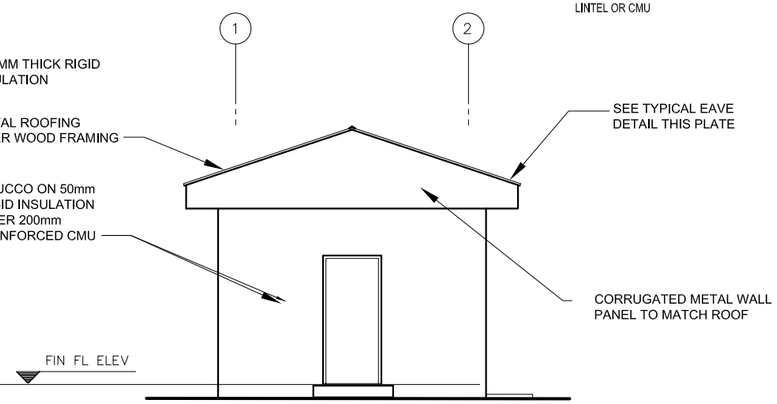

4 A-101 ELEVATION
SCALE = 1:50

ROOM FINISH SCHEDULE LEGEND

FLOOR TYPE
F1 SEALED CONCRETE

FLOOR COLOR
1 SEALED CONCRETE - NATURAL FINISH

WALL TYPE
W1 PAINTED CMU

WALL COLOR
20 PAINTED CMU - HEMPEL, 1005-Y50R-25400

CEILING TYPE
C1 PAINTED EXPOSED STRUCTURE

CEILING COLOR
30 PAINTED EXPOSED STRUCTURE - HEMPEL, 0502-Y-15420, OFF WHITE

ROOM FINISH SCHEDULE NOTES

1. ALL WALL PENETRATIONS SHALL BE SEALED TO PROVIDE A NEAT APPEARANCE. PENETRATIONS OF EXTERIOR WALLS SHALL BE SEALED TO WATER TIGHT.
2. SEALANTS SHALL MATCH THE COLOR OF ADJACENT SURFACES.

ROOM FINISH SCHEDULE

ROOM NO.	ROOM NAME	FLOOR		BASE		WALLS		CEILING			REMARKS
		MAT'L.	COLOR	MAT'L.	COLOR	MAT'L.	COLOR	MAT'L.	COLOR	HEIGHT	
001	WELL HOUSE ROOM	F1	1	--	--	W1	20	C1	30	3400	

DOOR SCHEDULE

DOOR							FRAME				FIRE LABEL	HDW SET	REMARKS
NO.	LOCATION	TYPE	MAT'L	WIDTH	HEIGHT	THICK	HEAD	JAMB	SILL	MAT'L			
001	WELL HOUSE ROOM	F	HM	900	2150	45	H-1/SA2	J-1/SA2	S-1/SA2	HM	--	6	

GRAPHIC SCALE

2500 1000 500 0 2500 5000
SCALE: 1 : 50

APPENDIX A

4.5

US ARMY CORPS OF ENGINEERS AFGHANISTAN ENGINEER DISTRICT

SYMBOL	DESCRIPTION	DATE	APP

DESIGNED BY: AED
DWN BY: AED
CKD BY: AED
REVIEWED BY:
SUBMITTED BY:
DATE: XX-XX-XX
DESIGN FILE NO.:
DRAWING CODE:
FILE NAME:
PLOT SCALE: AS SHOWN
CONTRACT NO. XX-XX-XX
REV: ___

U.S. ARMY CORPS OF ENGINEERS
AFGHANISTAN ENGINEER DISTRICT
APO AE 09356

ENGINEERING AND CONSTRUCTION DIVISION

WELL HOUSE
AFGHANISTAN

FLOOR & ROOF PLANS, ELEV., SECTION & SCHEDULES

SHEET REFERENCE NUMBER:
A-101
SHEET 5 OF 7

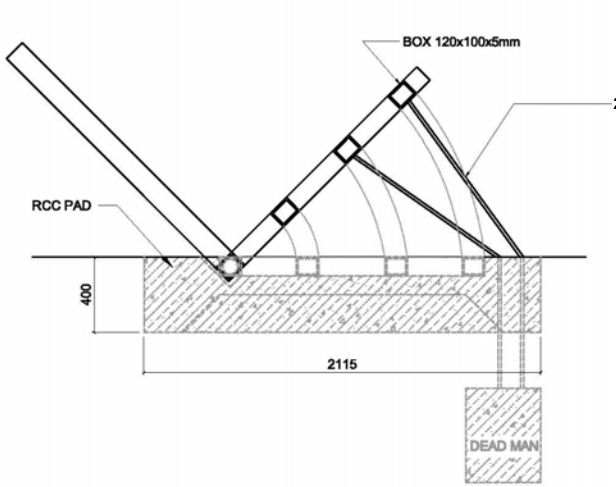

LIFT TYPE BARRIER GATE SIDE ELEVATION

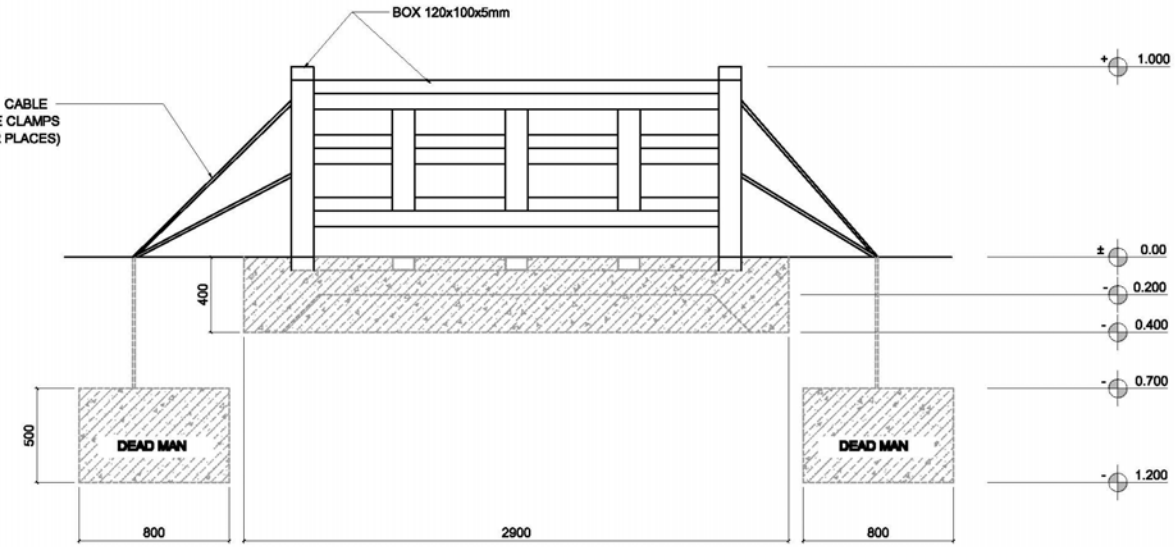

LIFT TYPE BARRIER GATE FRONT ELEVATION

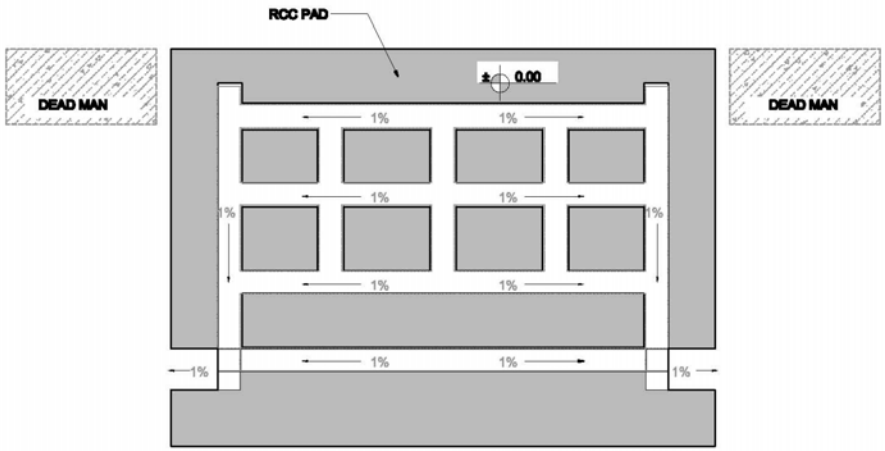

LIFT TYPE BARRIER GATE SLAB PLAN

NOTE:
ALL METAL CHANNEL WALLS SHALL BE 5mm OR THICKER
CONCRETE SHALL BE REINFORCED WITH A DOUBLE MAT OF 12mm REBAR
WIDTH OF EACH PULL-UP BARRIER SHALL BE ADJUSTED TO COVER THE ENTIRE TRAVEL LANE PLUS AN ADDITIONAL 500mm IN EACH SIDE
PIVOT BAR SHALL RUN THE ENTIRE LENGTH OF THE BARRIER
EACH BARRIER CABLE SHALL BE FIRMLY CLAMPED IN TO EACH DEAD MAN IN

ALL DIMENSIONS AND/OR DIMENSIONS SHOWN IN CALLOUTS/NOTES IN ARE IN MILLIMETERS UNLESS OTHERWISE NOTED.

0 0.125 0.25 0.5 0.75 1 1.25
1:25 GRAPHIC SCALE (METERS)

Appendix – Cable Lift Gate

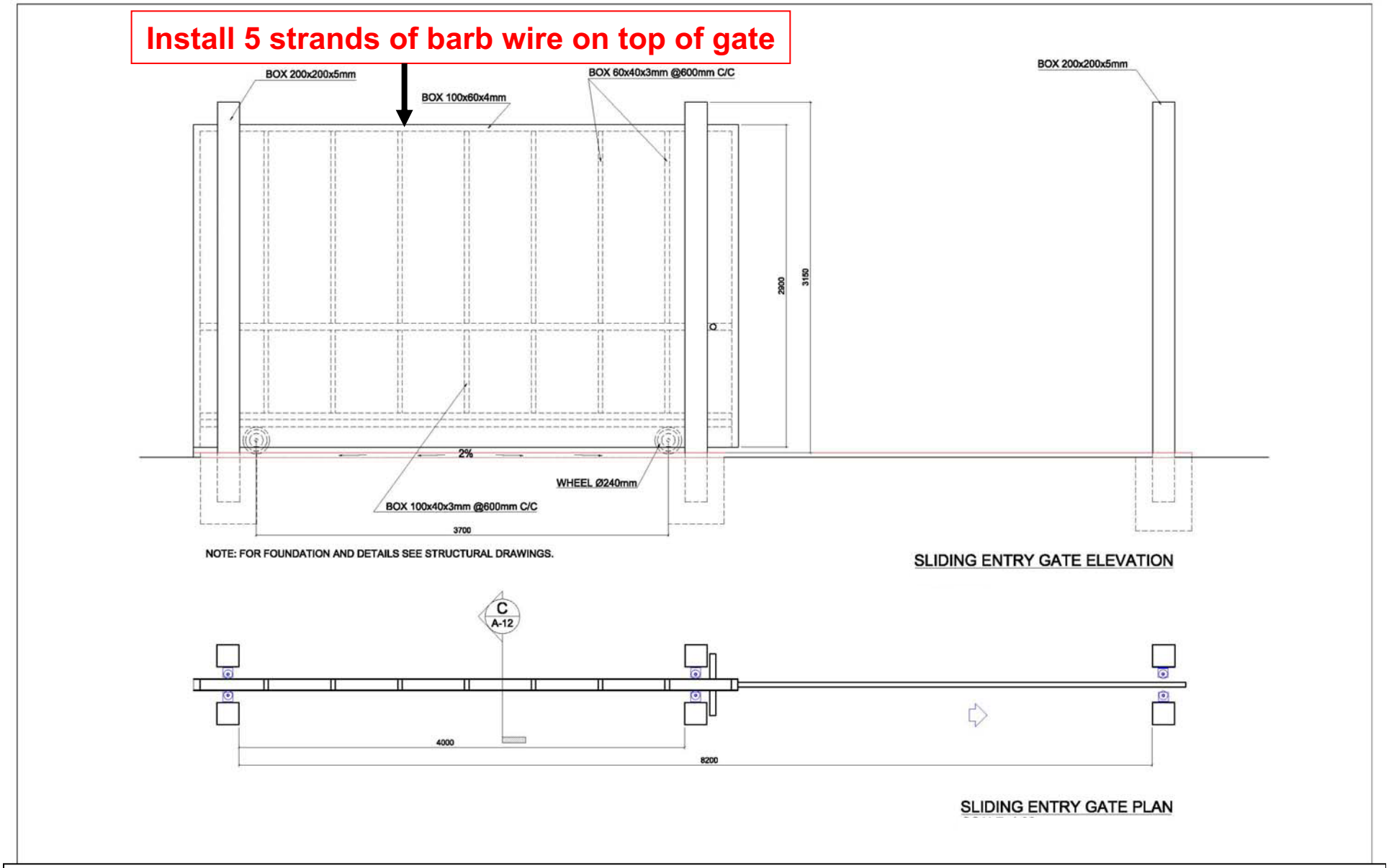

Appendix – K4 Sliding Gate

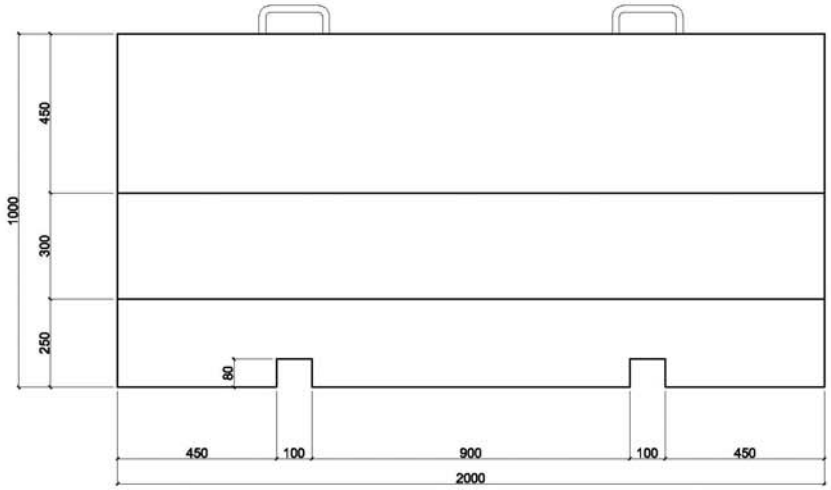

BARRIER FRONT ELEVATION

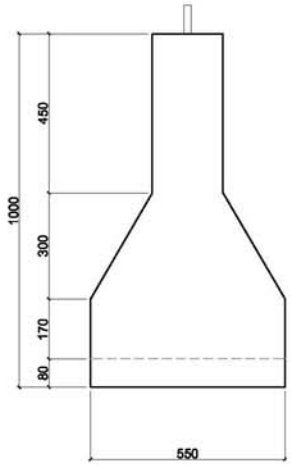

BARRIER SIDE ELEVATION

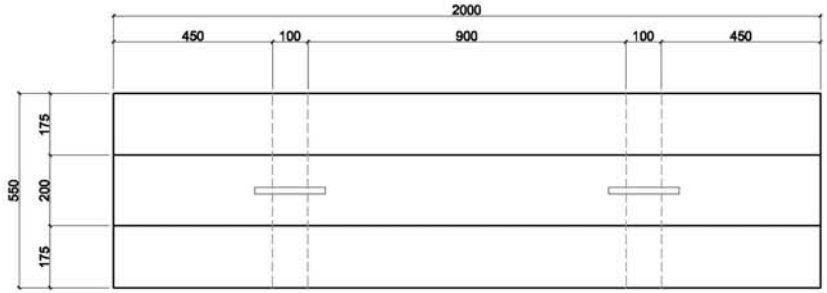

BARRIER PLAN

Appendix – “T” Barrier (size varies as needed)

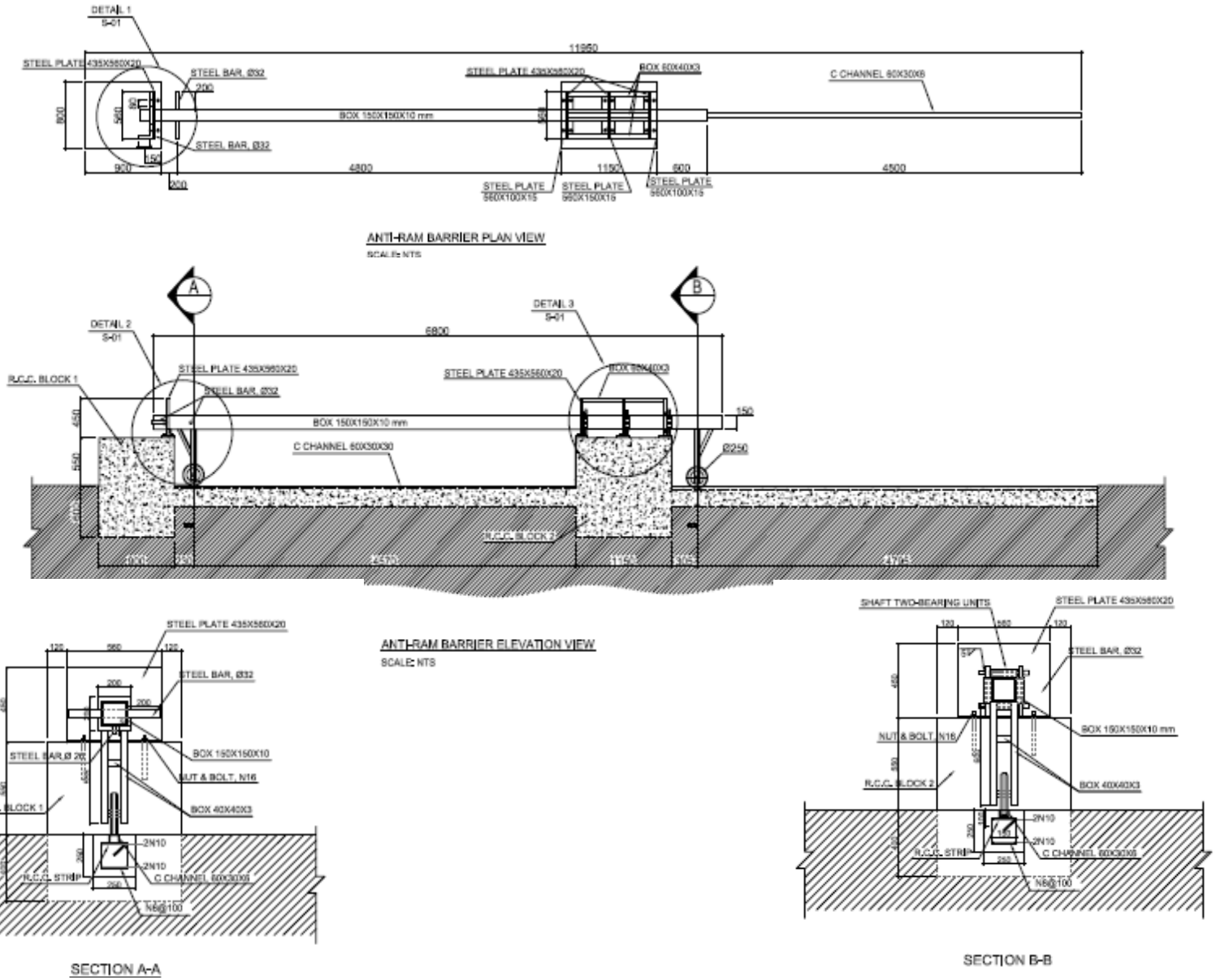

Appendix – Rolling Beam Barrier

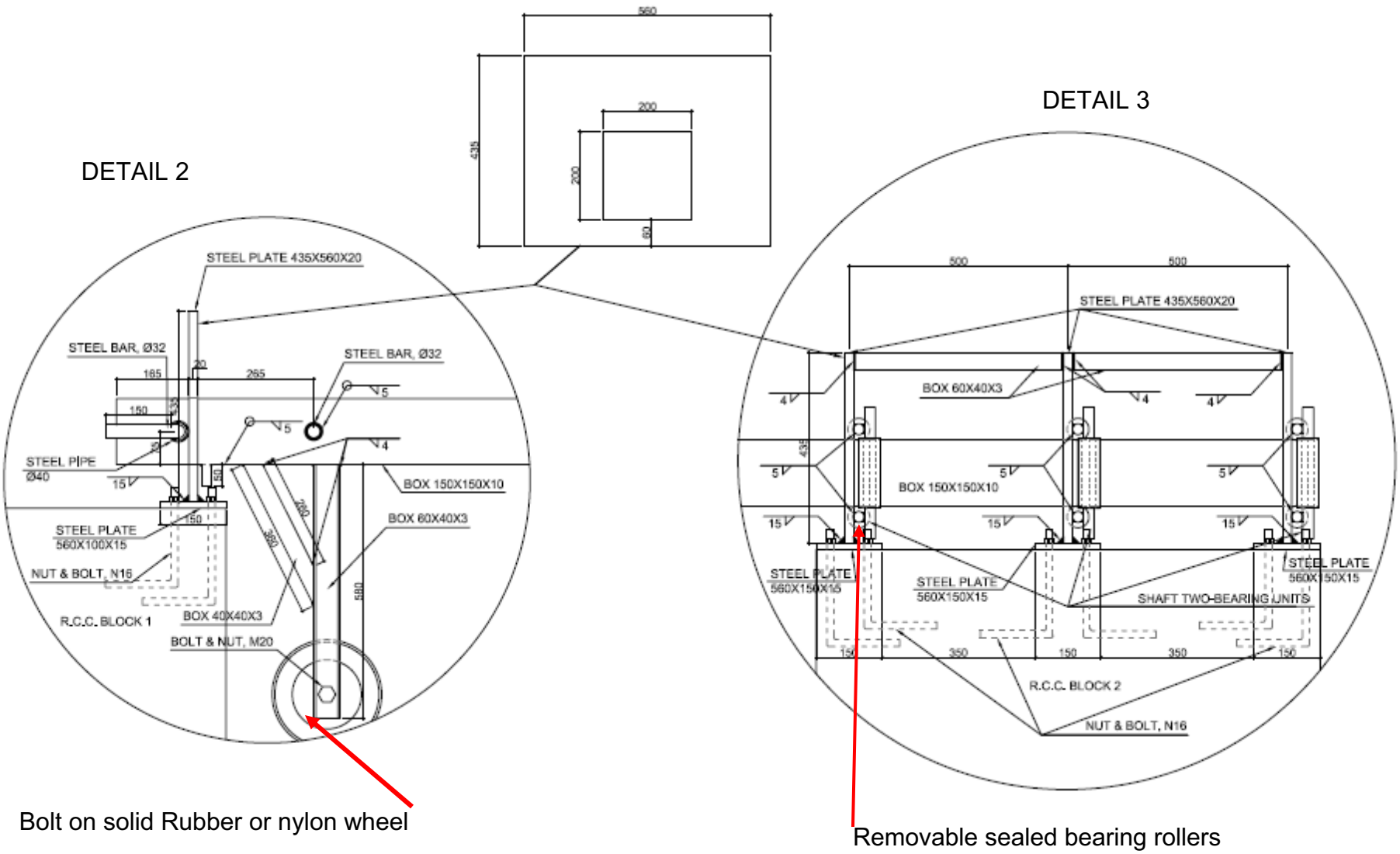

Bolt on solid Rubber or nylon wheel

Removable sealed bearing rollers

Appendix – Rolling Beam Barrier Details

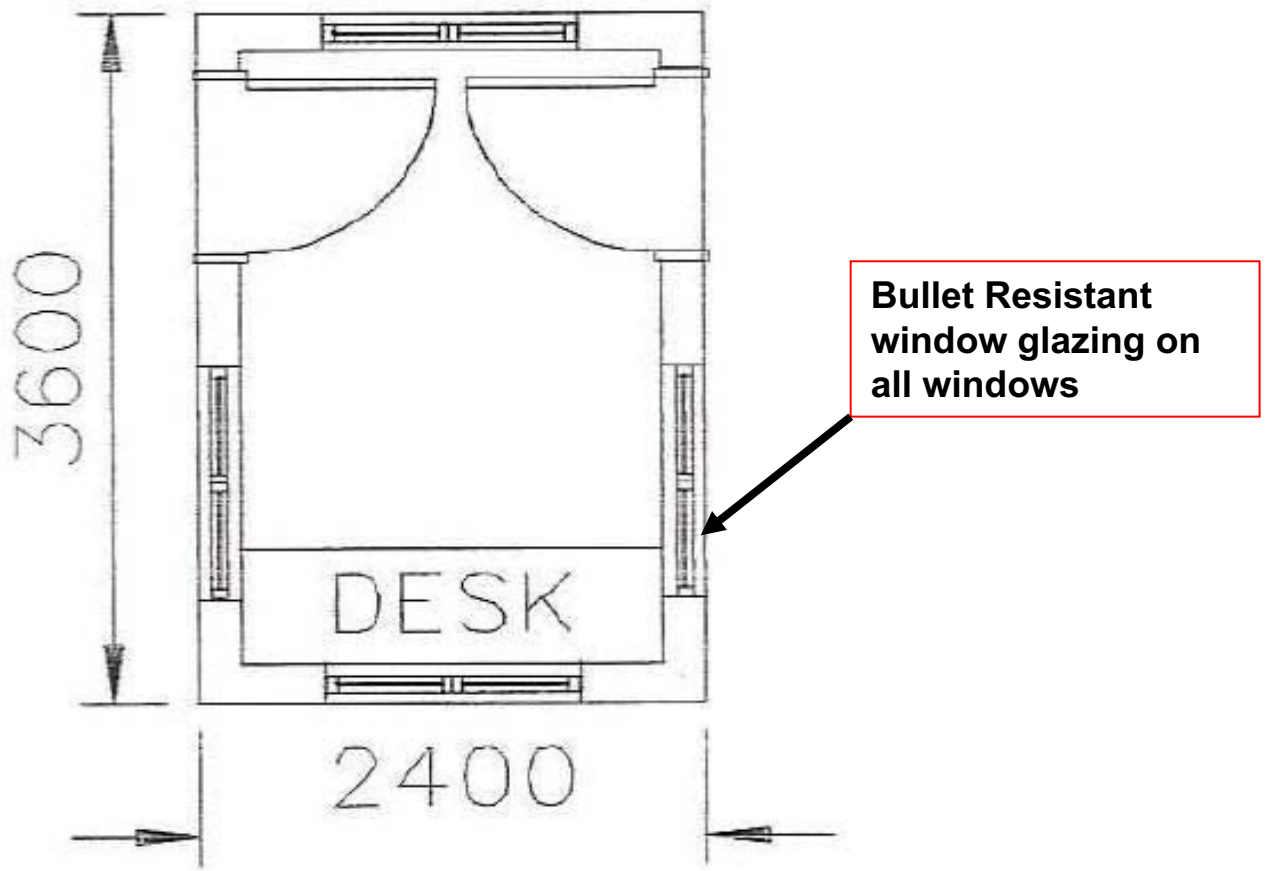

Gate House Plan

Appendix – Gate House

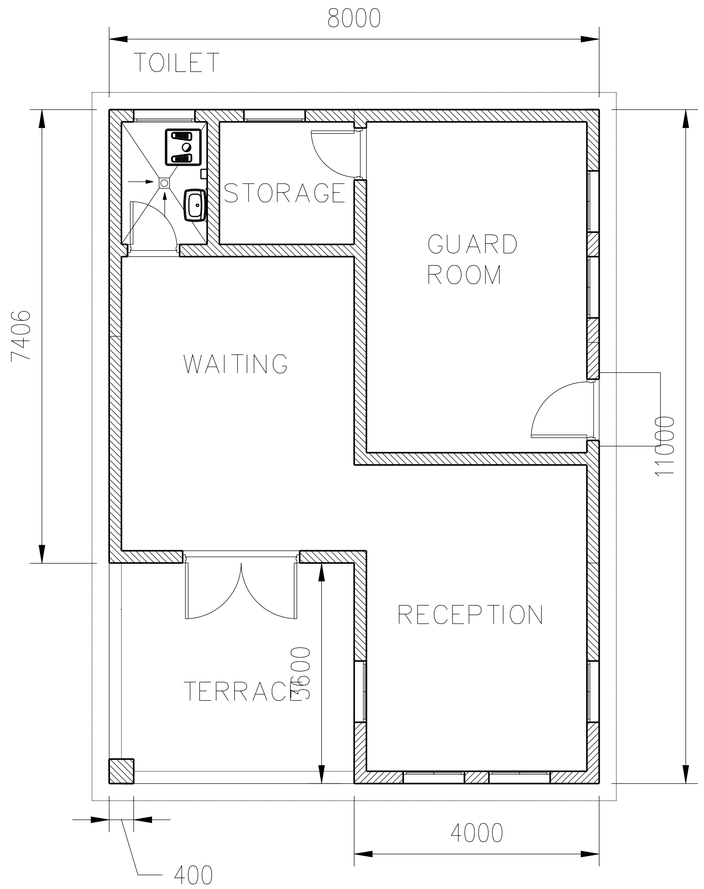

US ARMY CORPS OF ENGINEERS AFGHANISTAN ENGINEER DISTRICT

SYMBOL	DESCRIPTION	DATE	APPR.	SYMBOL	DESCRIPTION	DATE	APPR.

DESIGNED BY: DATE: XX-XX-XX REV.: —
DWN BY: CKD BY: DESIGN FILE NO.
REVIEWED BY: DRAWING CODE:
SUBMITTED BY: FILE NAME: PLOT SCALE: NTS PLOT DATE: XX-XX-XX

U.S. ARMY ENGINEER DISTRICT, AFGHANISTAN CORPS OF ENGINEERS APO AE 96338

ENGINEERING AND CONSTRUCTION DIVISION

RECEPTION BLDG

SHEET REFERENCE NUMBER:

SHEET --- OF ---

4.12

A1 Size 594mm x 841mm

- Design Elevation of Towers So it is above perimeter wall.

- Keep Stairwell from Encroaching to far into Perimeter Access Road

- Install Lighting & Conduits as per Scope of Work

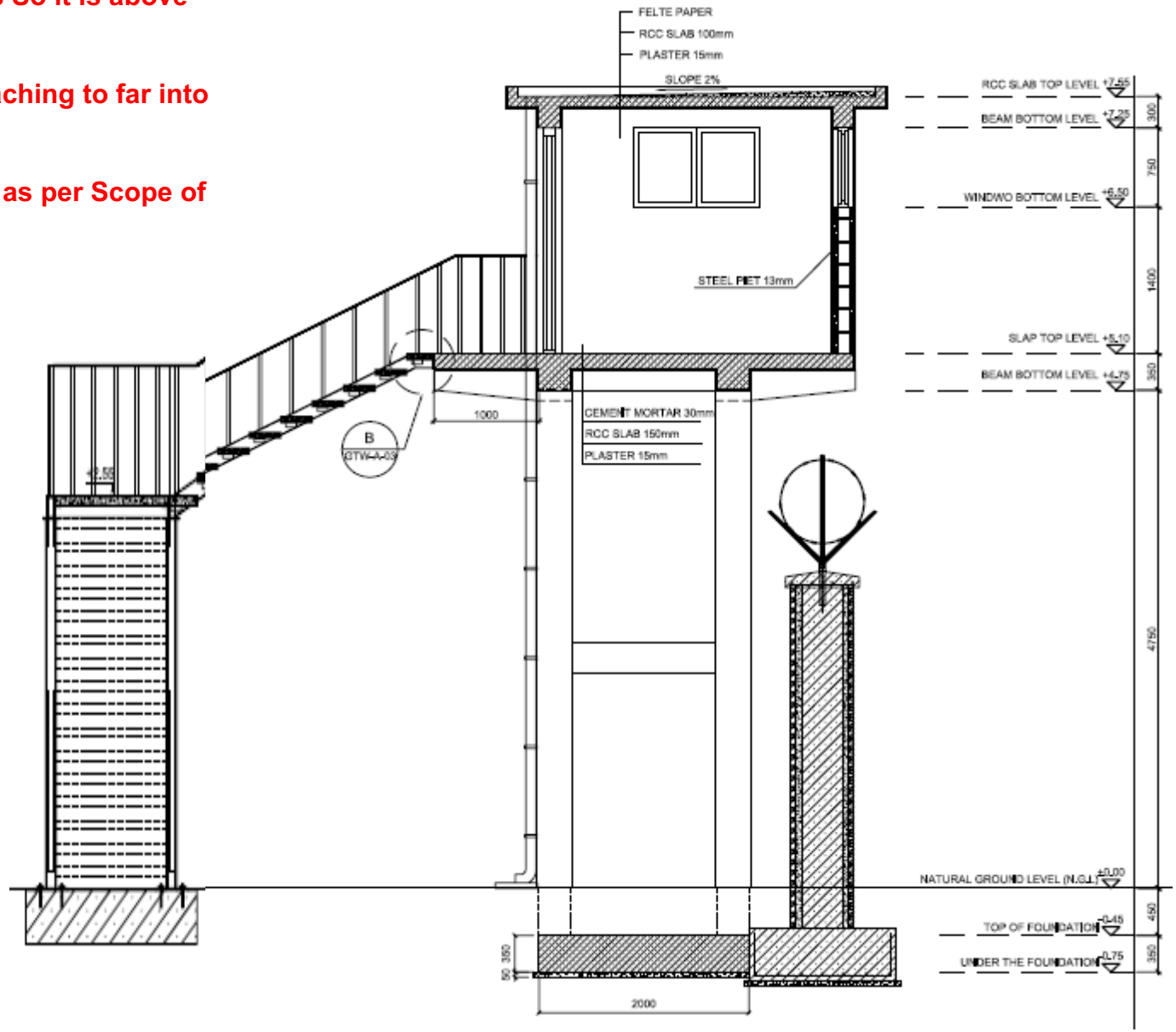

Appendix - New Guard Tower Concept Drawing

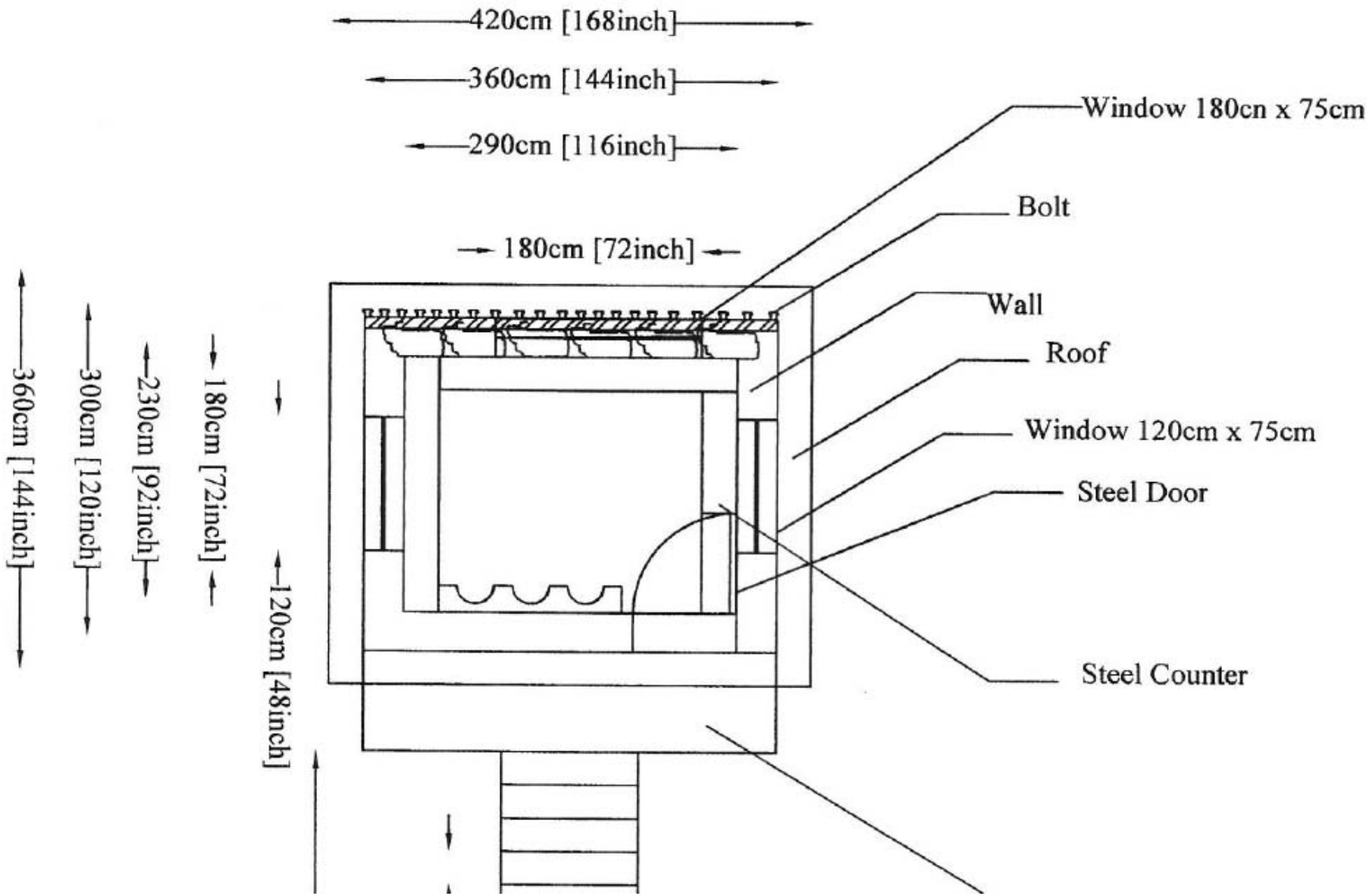

Appendix - New Guard Tower Top View

Window will be constructed of a minimum 13mm thick Lexan or equivalent with 3M Brand Scotchshield Security film (fragmentation film) or equivalent on inside that provides no visibility from outside during day or night. But allows full vision from the inside during day and night.

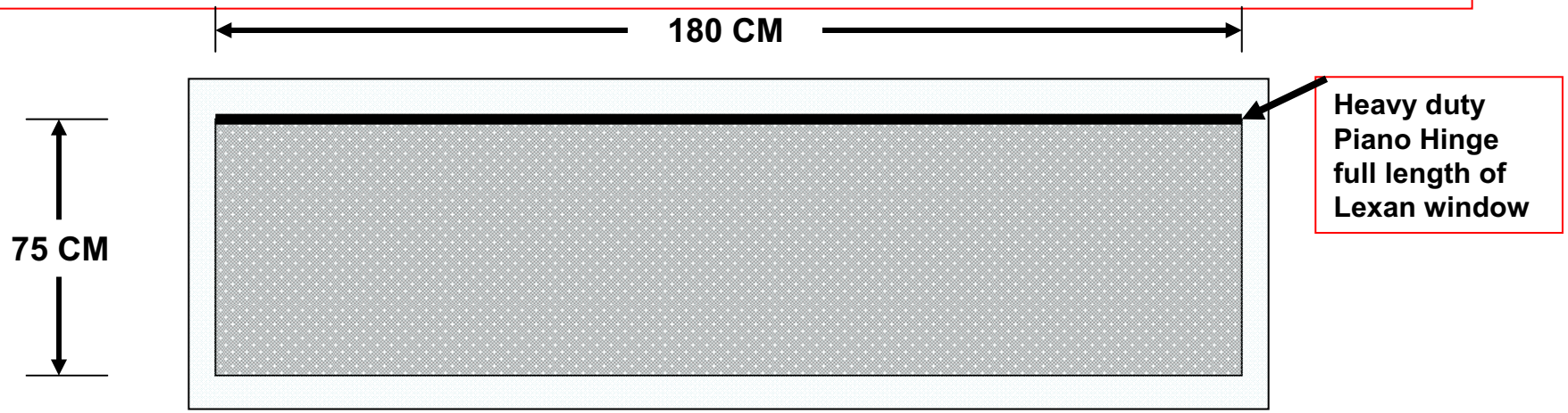

Window will swing out on a heavy duty piano hinge and will lock in the open & closed position. The window frame will be constructed of metal and coated with a non corrosive coating. The window will have a good quality weather stripping installed around the perimeter of the frame to provide a good air seal.

Appendix – New Guard Tower Window Detail

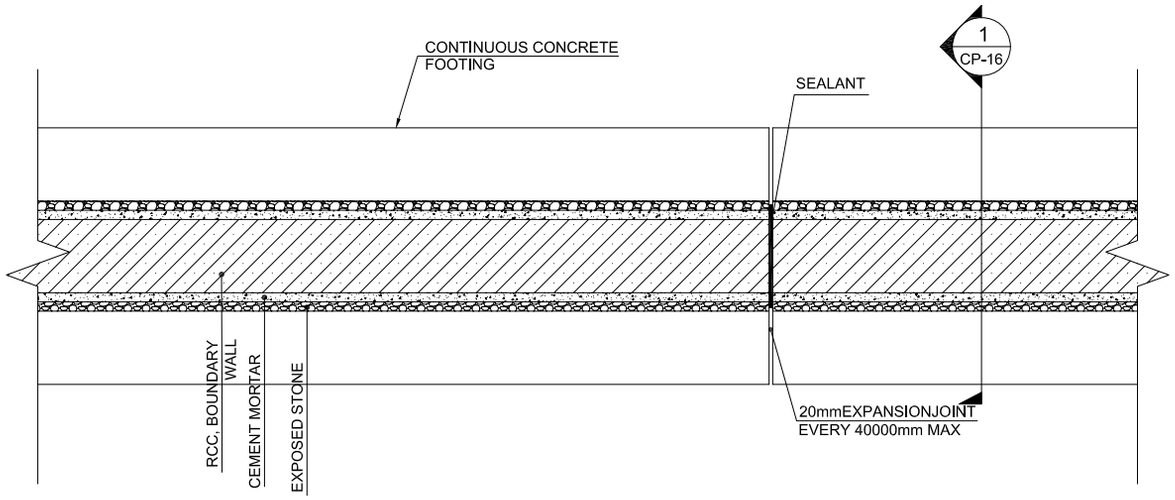

01 PLAN OF BOUNDRY WALL

SCALE: 1:40

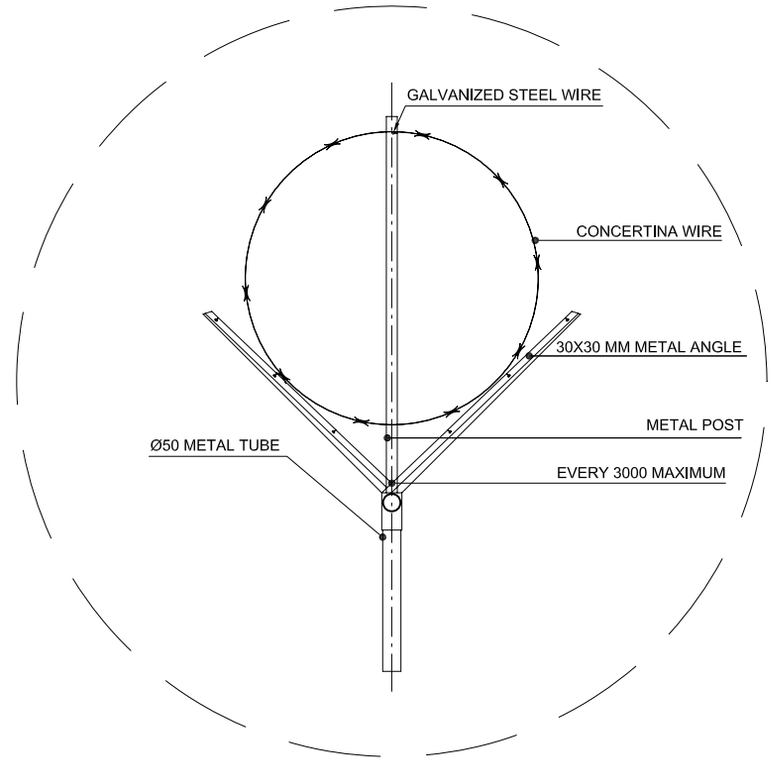

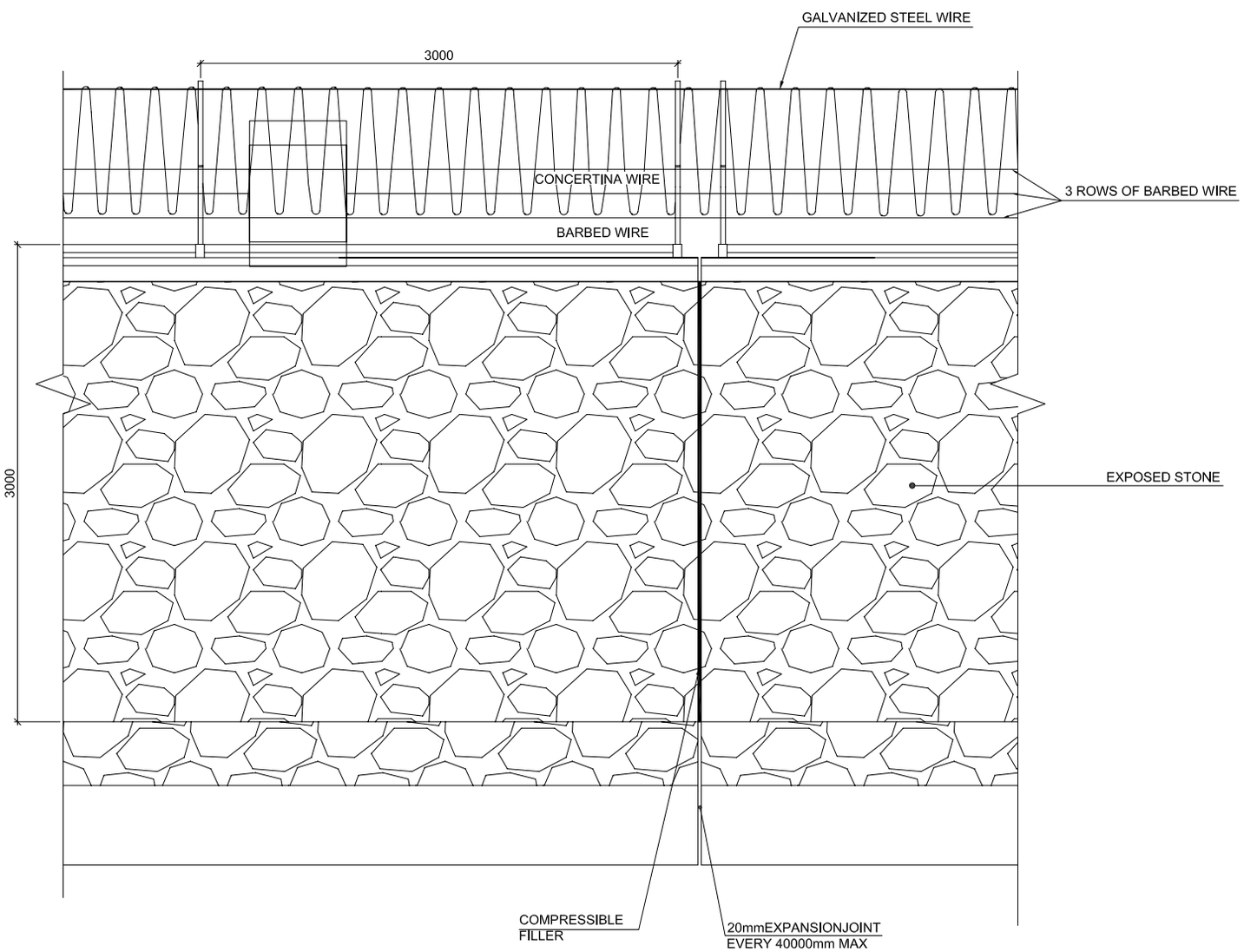

02 ELEVATION OF STONE MASONRY WALL

SCALE: 1:40

PERIMETER SECURITY WALL

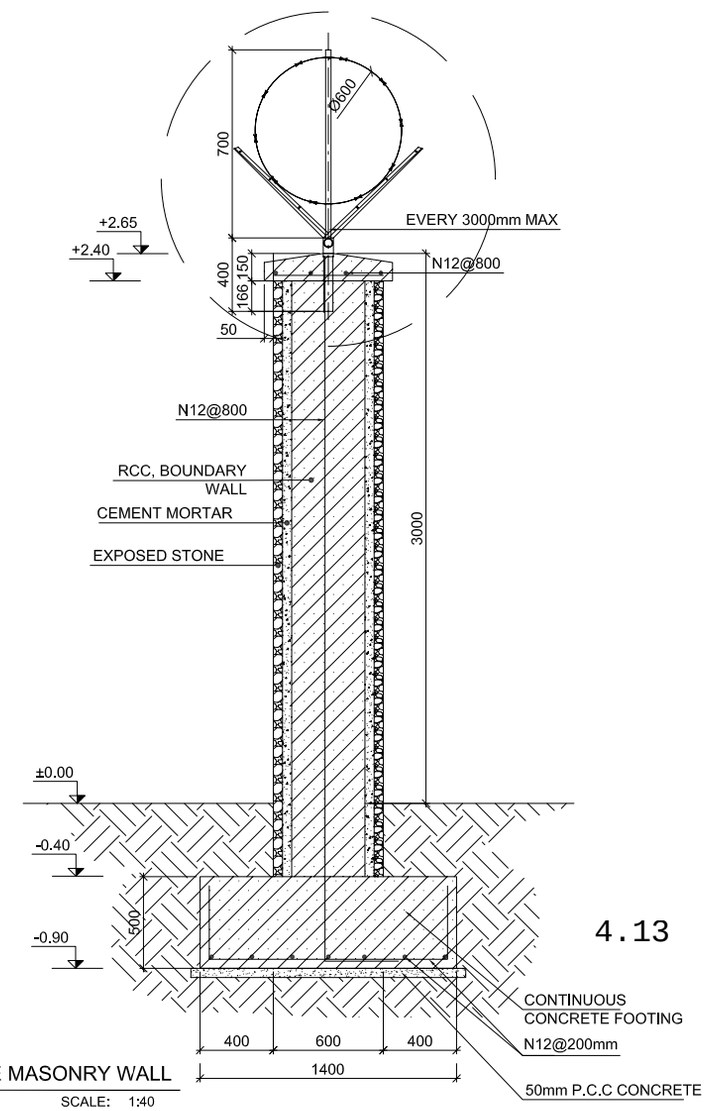

03 CROSS SECTIO AT STONE MASONRY WALL

SCALE: 1:40

4.13

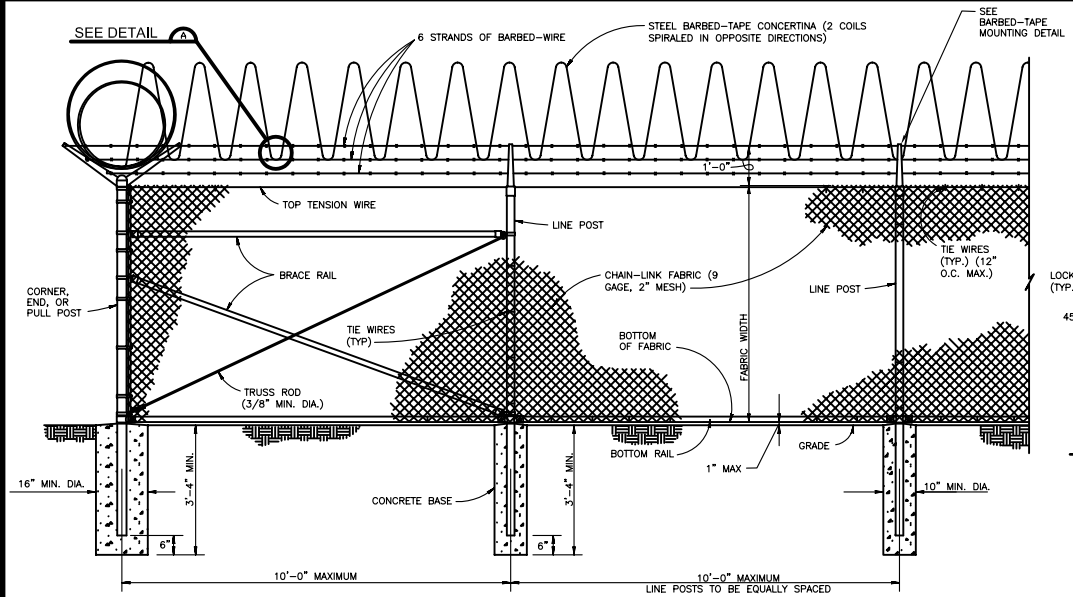

1 CHAIN-LINK SECURITY FENCE DETAIL

NO SCALE

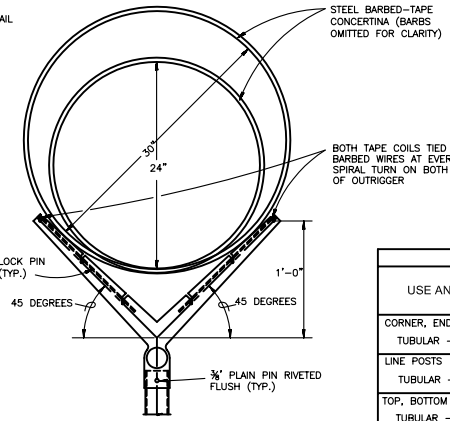

BARBED-TAPE MOUNTING DETAIL

NO SCALE

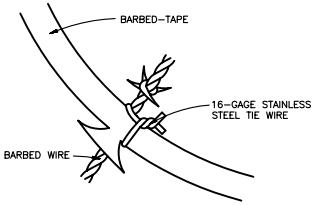

DETAIL A

NO SCALE

STEEL POST SCHEDULE			
USE AND SECTION	MINIMUM OUTSIDE DIMENSIONS (NOMINAL)		
	FABRIC WIDTH 72" OR LESS	FABRIC WIDTH 84" TO 96"	FABRIC WIDTH 108" AND OVER
CORNER, END & PULL POSTS			
TUBULAR – ROUND	2.375" O.D.	2.875" O.D.	4.00" O.D.
LINE POSTS			
TUBULAR – ROUND	1.90" O.D.	2.375" O.D.	2.875" O.D.
TOP, BOTTOM & BRACE RAILS			
TUBULAR – ROUND	1.66" O.D.		
TUBULAR – SQUARE	1.50" SQ.		
H-SECTION	1.625" X 1.50"		
C-SECTION (ROLL-FORMED)	1.625" X 1.25"		

NOTES:

1 1. WIRE TIES, RAILS, POSTS, AND BRACES SHALL BE CONSTRUCTED ON THE SECURE SIDE OF THE FENCE ALIGNMENT. CHAIN-LINK FABRIC SHALL BE PLACED ON THE SIDE OPPOSITE THE SECURE AREA.

2. ONLY 9-GAGE GALVANIZED STEEL TIE WIRES SHALL BE USED FOR FASTENING THE FENCE FABRIC TO FENCE POSTS AND RAILS. 16-GAGE, 6.5" LONG, STAINLESS STEEL DOUBLE LOOP BAR TIE WIRES SHALL BE USED FOR FASTENING FENCE FABRIC TO TENSION WIRES AND TRUSS RODS. HOG RINGS SHALL NOT BE ALLOWED ON SENSORED FENCES.

3. BOTTOM RAIL SHALL BE ATTACHED TO DOUBLE RAIL ENDS USING 3/8" CARRIAGE BOLTS AS SHOWN. ADDITIONAL HOLES SHALL BE DRILLED THROUGH BOTTOM RAIL ENDS TO INSURE THAT CARRIAGE BOLTS PASS THROUGH THE BOTTOM RAIL AS SHOWN.

FENCE LEGEND:

TYPE FE5 – CHAIN-LINK FENCE WITHOUT BARBED-WIRE APRON
TYPE FE6 – CHAIN-LINK FENCE W/BARBED-WIRE ON SINGLE OUTRIGGER
TYPE FE7 – CHAIN-LINK FENCE W/BARBED-WIRE ON DOUBLE OUTRIGGER
TYPE FE8 – CHAIN-LINK FENCE W/BARBED-WIRE AND BARBED-TAPE ON DOUBLE OUTRIGGER
TR – FENCE WITH TOP RAIL AND TENSION WIRE AT BOTTOM
TBR – FENCE WITH TOP AND BOTTOM RAILS
TWB – TENSION WIRE TOP AND BOTTOM
TWBR – FENCE WITH TOP TENSION WIRE AND BOTTOM RAIL
FINAL NUMBER IS FABRIC WIDTH IN INCHES.

EXAMPLES

FE6-TR-72 – CHAIN-LINK SECURITY FENCE WITH BARBED-WIRE ON SINGLE OUTRIGGER, TOP RAIL, AND 72 INCH FABRIC WIDTH.

FE5-TWB-84 – CHAIN-LINK SECURITY FENCE WITH NO APRON, TOP AND BOTTOM TENSION WIRE, AND 84 INCH FABRIC WIDTH.

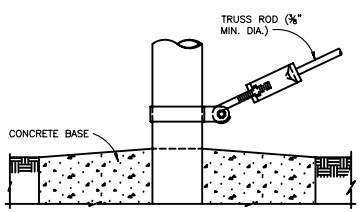

TRUSS ROD AND BAND

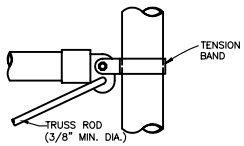

BRACE RAIL CLAMP DETAIL

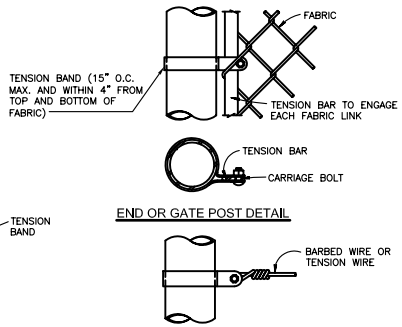

END OR GATE POST DETAIL

TENSION BAND DETAIL

FASTENING DETAILS

NO SCALE

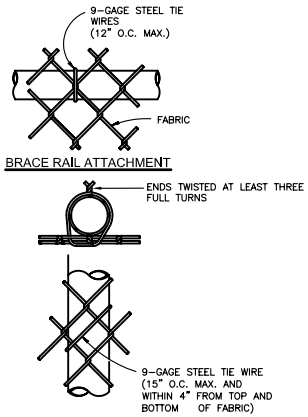

BRACE RAIL ATTACHMENT

LINE POST ATTACHMENTS

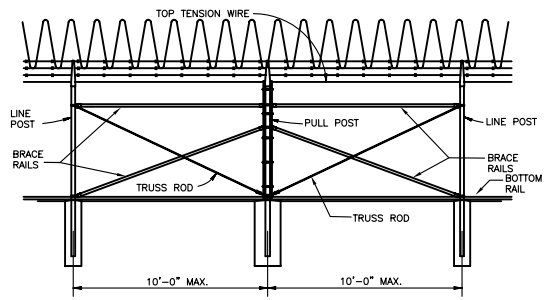

1 BRACE PANEL DETAIL

NO SCALE

NOTE:
PROVIDE BRACE PANEL WHENEVER STRAIGHT RUNS EXCEED 500 FEET.

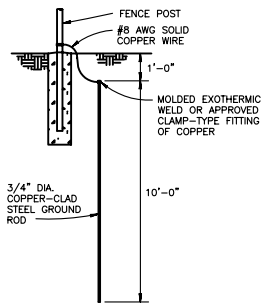

GROUNDING DETAIL

NO SCALE

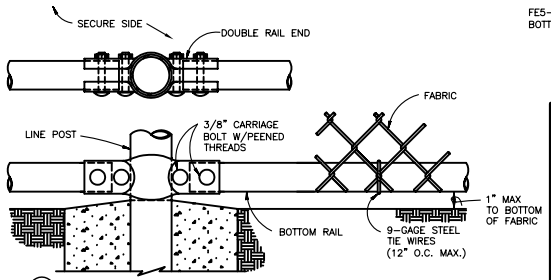

1 BOTTOM RAIL DETAILS

NO SCALE

4.13

	$$ - THINK VALUE ENGINEERING - $$		
	Revisions		
Symbol	Descriptions	Date	Approved
1	REV #0001 GENERAL REVISIONS	3/17/04	JWE

U.S. ARMY ENGINEER DISTRICT
CORPS OF ENGINEERS
OMAHA, NEBRASKA

Designed by: X
Drawn by: X
Checked by: X
Reviewed by: X
Submitted by:
Chief: X Section

BASE NAME BASE LOCATION

STANDARD DETAILS FOR CHAIN-LINK SECURITY FENCES, FARM STYLE FENCES AND A DOUBLE CABLE BARRIER

FE8 CHAIN-LINK SECURITY FENCE DETAILS

FOR SENSORED FENCE

Plot Scale Ratio: 1:1
Date: 03/17/04
Design File: 07_FEBFENCE.DWG
Spec. No.: DACA 45
Drawing Code: STD 872-90-07
Contract No.: DACA 45
Sheet reference number: 07

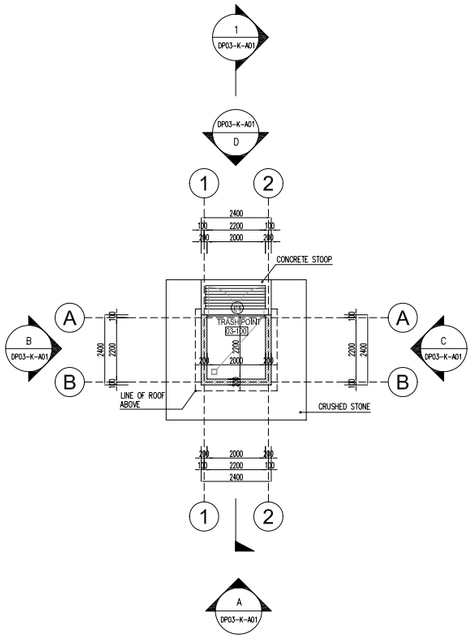

1 FLOOR PLAN

DP03-K-A01 SCALE: 1:100

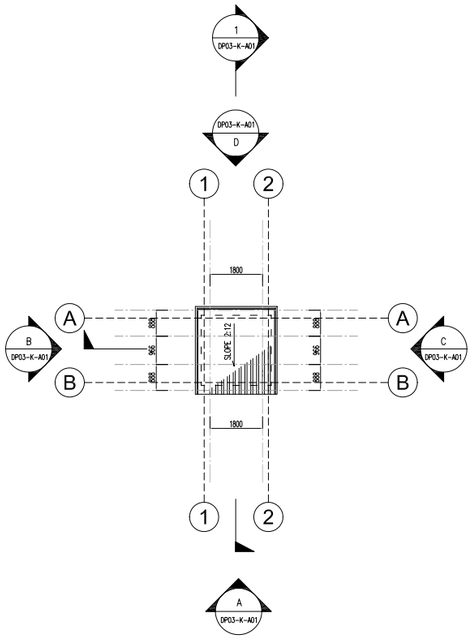

2 ROOF PLAN

DP03-K-A01 SCALE: 1:100

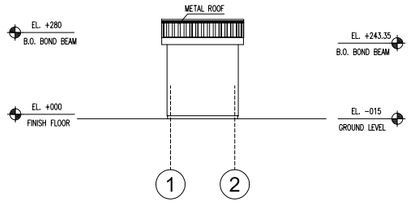

A ELEVATION

DP03-K-A01 SCALE: 1:100

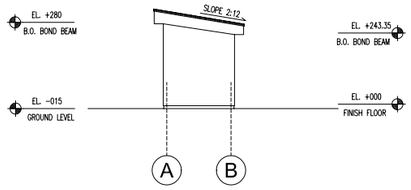

B ELEVATION

DP03-K-A01 SCALE: 1:100

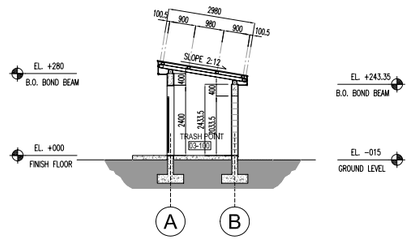

1 SECTION

DP03-K-A01 SCALE: 1:100

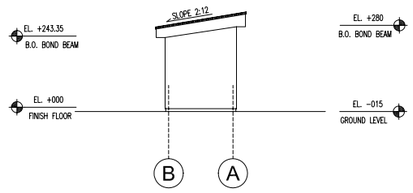

C ELEVATION

DP03-K-A01 SCALE: 1:100

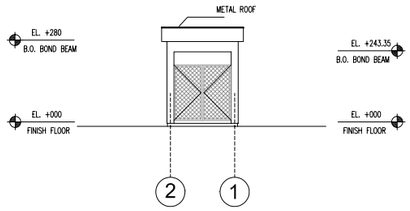

D ELEVATION

DP03-K-A01 SCALE: DP03-K-A01

FINISHING SCHEDULE

ROOM NUMBER	USAGE	NSM	FLOOR	WALL COVER	CEILING
03-100	TRASH POINT	4.40 M²	F1	W1	-

FINISHING SCHEDULE LEGEND

FLOOR

F1	SEALED CONCRETE	
F2	TERRAZZO 30X30 CM	NOT USED
F3	SMOOTH TERRAZZO 30X30 CM	NOT USED
F4	CERAMIC 33X33 CM (DIAGONAL)	NOT USED
F5	RAISED FLOOR	NOT USED

WALL COVER

W1	SEMI-GLOSS WHITE PAINT	
W2	CERAMIC H=200 CM	NOT USED
W3	CERAMIC H=180 CM	NOT USED
W4	CERAMIC H=120 CM	NOT USED

CEILING

C1	DRY WALL+SEMI GLOSS WHITE PAINT	NOT USED
C2	WATERPROOF DRY WALL+SEMI GLOSS WHITE PAINT	NOT USED

WALL SYMBOLS

CMU WALL

DRY WALL

NOTES:

1-EXTERIOR WALLS AND SECURITY ZONE WALLS 20X40X20 CM CMU WALL.

2-INTERIOR PARTITION WALLS ONE LAYER 15 MM DRY WALL (TOTAL:105 MM) UNLESS OTHERWISE NOTED.

3-ALL DIMENSIONS ARE TO FACE OF CMU AND DRY WALLS UNLESS NOTED OTHERWISE.

4-ROOF IS SLOPE 2:12 METAL ROOF.

5-SEE CIVIL DRAWINGS FOR BUILDING COORDINATES AND FINISH FLOOR ELEVATION.

6-SEE STRUCTURAL DRAWINGS FOR SEISMIC JOINTS & CONSTRUCTION JOINTS.

7-FURNITURE IS OUT OF SCOPE.

TOTAL AREA OF BUILDING :5.76 M2

U.S ARMY CORPS OF ENGINEERS
AFGANISTAN ENGINEER DISTRICT

Symbol	Description	Date	Appr.	Symbol	Description	DATE	Appr.
1	99%DESIGNSUBMITTAL	26-OCT-08					
2	35%DESIGNSUBMITTAL	25-AUG-08					

Contract Date: CONTRACTDATE
FILE NAME: TRASH POINT
Drawn BY: B.ERTOSZ B.YILDIRIM
Draw Code: DP03-K-A01
Plot Date: 26-OCT-08
Plot Scale: 1:100
Designed BY: G.IRMAK
Reviewed by: G.IRMAK
Submitted by: IRMAK
Contract No: W917PM-07-D-0017 TO 0005

DEPARTMENT OF THE ARMY
U.S ARMY CORPS OF ENGIEERS
AFGHANISTAN ENGINEERS DISTRICT
POL-E KHOMRI, AFGHANISTAN
Contractor: YMTYZ JV
Designer in Association with IRMAK,KONKAN,TIMKA,DELTA OMABERKMEN

ANA POL-E KHOMRI FOB
POL-E KHOMRI, AFGHANISTAN

TRASH POINT
FLOOR PLAN,SECTION AND ELEVATIONS

Sheet Reference Number:

DP03-K-A01

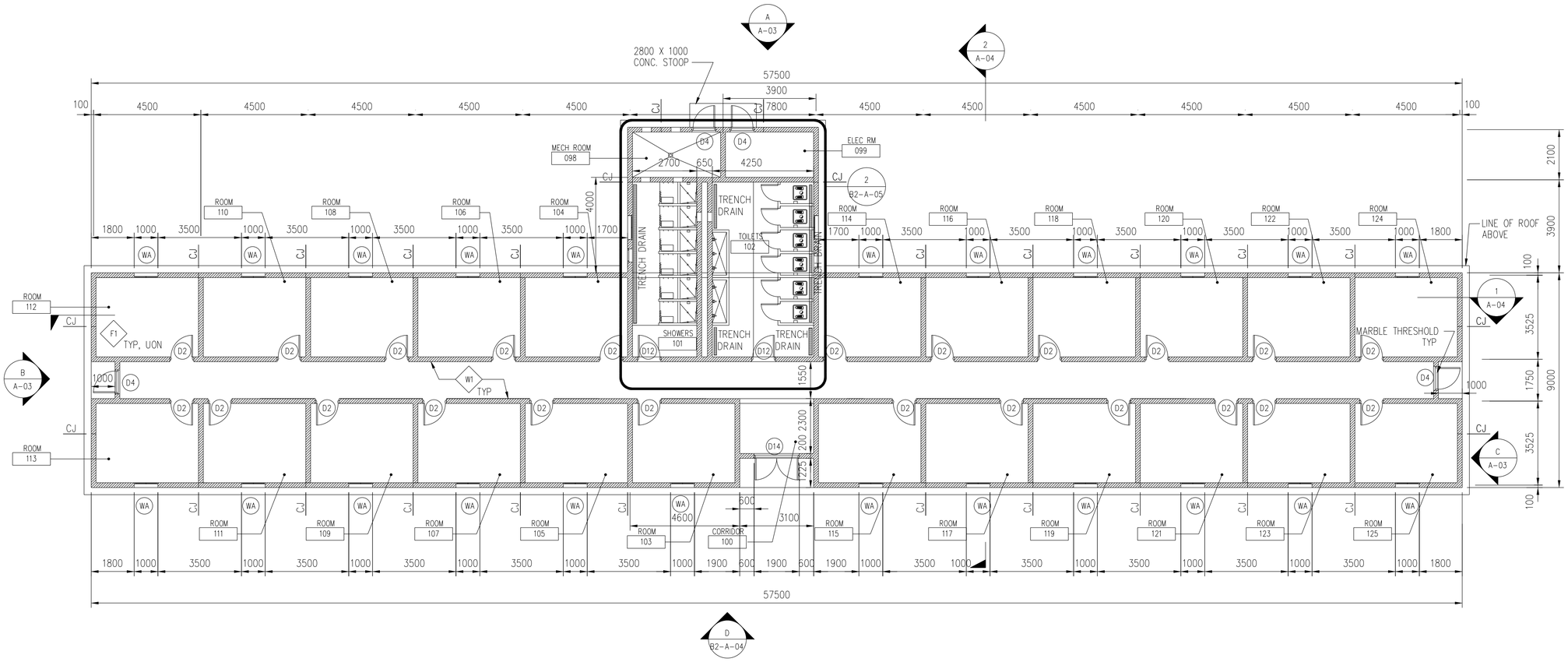

4.16

US ARMY CORPS
OF ENGINEERS
AFGHANISTAN
ENGINEER DISTRICT

SYMBOL	DESCRIPTION	DATE	APPR.	SYMBOL	DESCRIPTION	DATE	APPR.

DATE: XX-XX-XX
REV.: —
DESIGN FILE NO.:
DRAWING CODE:
FILE NAME:
PLOT SCALE: NTS
PLOT DATE: XX-XX-XX

DESIGNED BY:
DWN BY:
CKD BY:
REVIEWED BY:
SUBMITTED BY:

U.S. ARMY ENGINEER DISTRICT, AFGHANISTAN
CORPS OF ENGINEERS
APO AE 96338

ENGINEERING AND
CONSTRUCTION DIVISION

OFFICER/NCO
BUILDING

SHEET
REFERENCE
NUMBER:

SHEET --- OF ---

A1 Size 594mm x 841mm

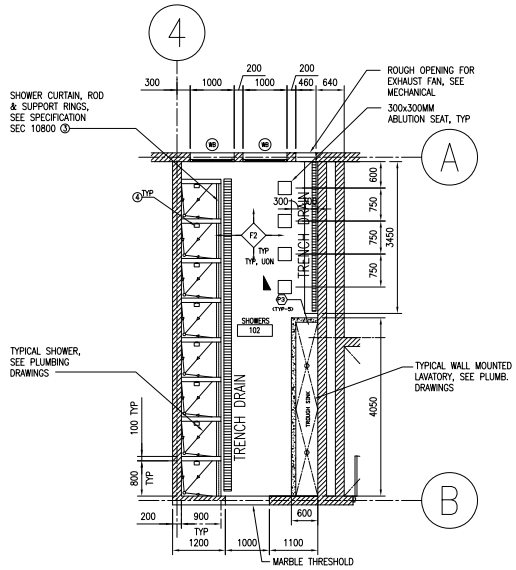

3 ENLARGED SHOWERS PLAN

SCALE: 1:50

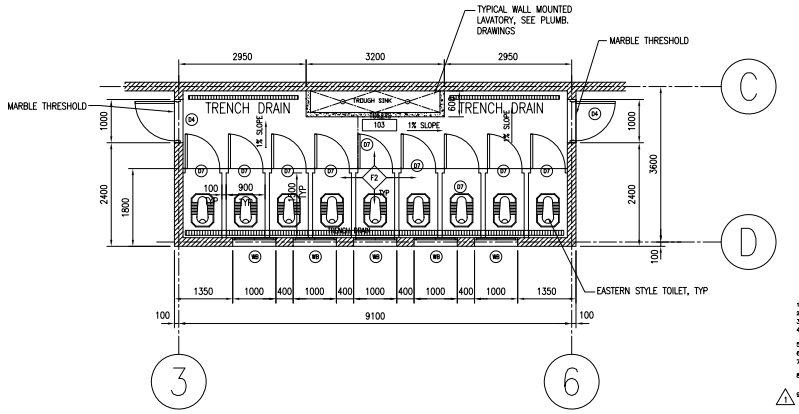

2 ENLARGED TOILETS PLAN

SCALE: 1:50

Finishing Schedule Legend

Floor

F1	ENAMEL FLOOR PAINT
F2	300MM×300MM TERRAZZO TILE

Wall

W1	WHITE PAINTED PLASTER
W2	150MM×150MM GLAZED CERAMIC TILES UP TO 2000MM A.F.F.L.

Ceiling

C1	FLAT WHITE PAINTED PLASTER OVER CHICKEN WIRE

Finishing Schedule

Room No.	Usage	Floor	Wall	Ceiling
101	BARRACKS	F1	W1	C1
102	SHOWERS	F2	W1,W2	C1
103	TOILETS	F2	W1,W2	C1
104	NCO	F1	W1	C1
105	MECHANICAL ROOM	F1	W1	C1
106	BARRACKS	F1	W1	C1

Notes:

1- ALL WALLS ARE CMU UNLESS OTHERWISE NOTED.
2- ALL WALLS TERMINATE AT CEILING LEVEL UNLESS NOTED OTHERWISE.
3- ALL DIMENSIONS ARE TO FACE OF CMU UNLESS NOTED OTHERWISE.
4- ALL VERTICAL DIMENSIONS & LEVELS ARE FROM GROUND FLOOR FINISHED SLAB. THIS ELEVATION IS +0000.
5-
6-
7- SEE CIVIL DRAWINGS FOR BUILDING COORDINATES AND FINISH FLOOR ELEVATION.
8- SEE STRUCTURAL DRAWINGS FOR LOCATION OF BUILDING CONTROL AND SEISMIC JOINTS.
9- TOTAL AREA OF BUILDING 469.58 M2.

Wall Symbols:

CMU FLOOR TO STRUCTURAL ROOF DECK WITH PLASTER FINISH, UNLESS OTHERWISE NOTED.

CMU LOW HEIGHT WALL +/- 2000 MM WITH CERAMIC TILE FINISH

Toilet Accessory Schedule

No.	Description
1	MIRROR, GLASS
2	SHOWER CURTAIN & ROD
3	SOAP HOLDER
4	TOWEL BAR
5	BIB HOSE IN EACH TOILET STALL

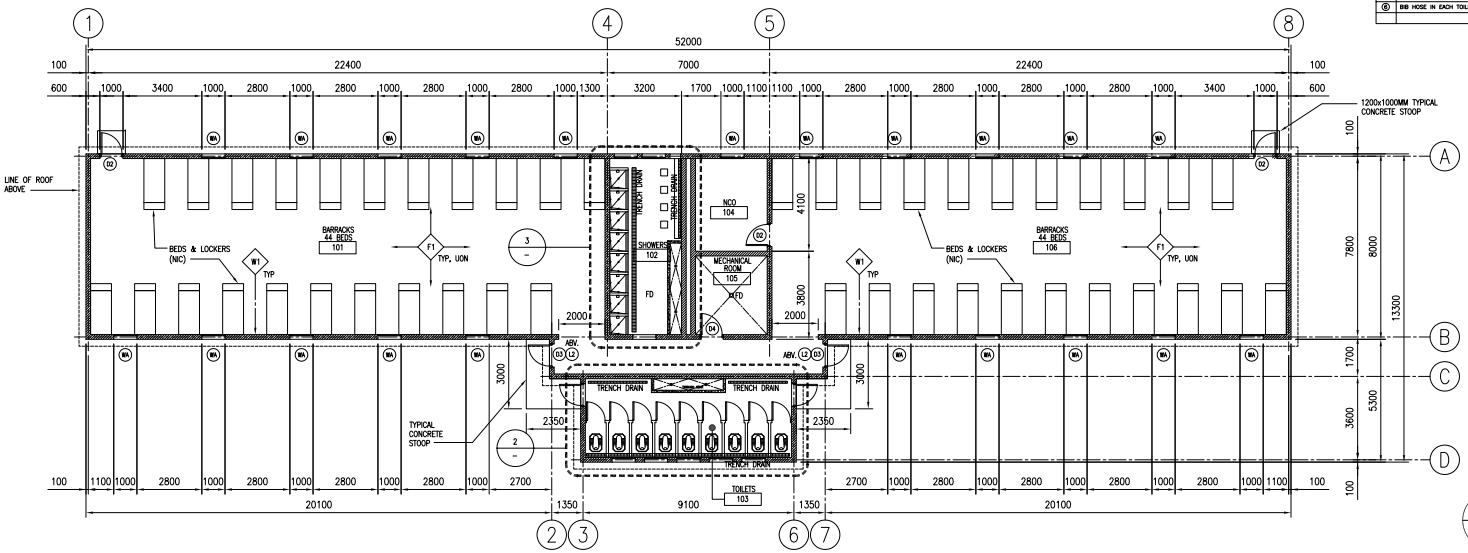

1 FLOOR PLAN

SCALE: 1:100

NORTH PLAN

4.16

Scale 1:50

Scale 1:100

CLIENT

U.S. ARMY CORPS OF ENGINEERS
AFGHANISTAN ENGINEER DISTRICT

DESIGNER

CONSULTANTS

REGISTRATION

ISSUE

MARK	DATE	DESCRIPTION
1	7 DEC, 2008	100% CONCEPT

PROJECT NO: -
DRAWN BY: -
CHECKED BY: -

KEY PLAN

SHEET TITLE

ANA ENLISTED BARRACKS (B) FLOOR PLAN TYPICAL

BB-A-01

4.16

F.F.L = 1000.

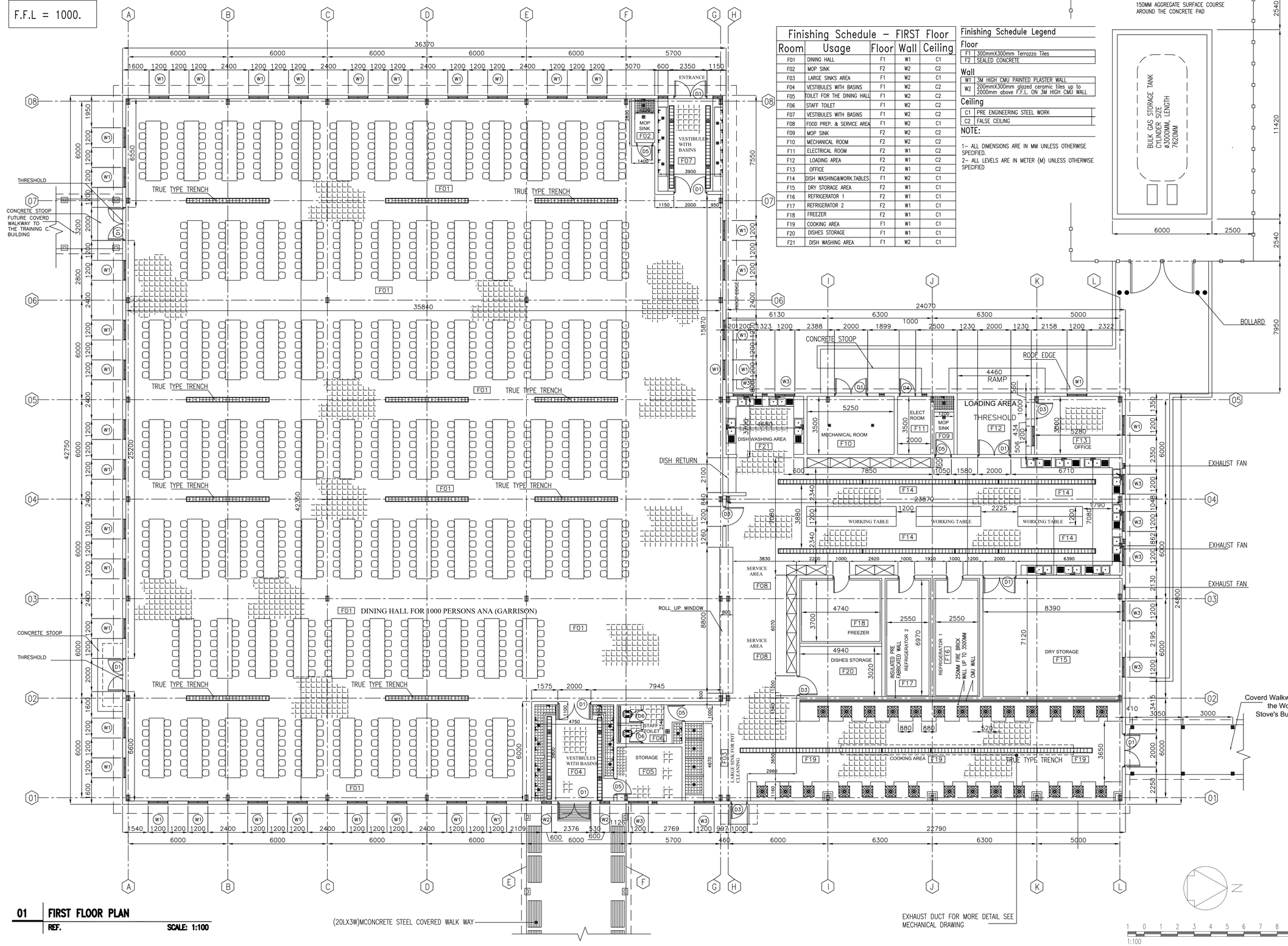

Finishing Schedule – FIRST Floor

Room	Usage	Floor	Wall	Ceiling
F01	DINING HALL	F1	W1	C1
F02	MOP SINK	F2	W2	C2
F03	LARGE SINKS AREA	F1	W2	C1
F04	VESTIBULES WITH BASINS	F1	W2	C2
F05	TOILET FOR THE DINING HALL	F1	W2	C2
F06	STAFF TOILET	F1	W2	C2
F07	VESTIBULES WITH BASINS	F1	W2	C2
F08	FOOD PREP. & SERVICE AREA	F1	W2	C1
F09	MOP SINK	F2	W2	C2
F10	MECHANICAL ROOM	F2	W2	C2
F11	ELECTRICAL ROOM	F2	W1	C2
F12	LOADING AREA	F2	W1	C2
F13	OFFICE	F2	W1	C2
F14	DISH WASHING&WORK.TABLES	F1	W2	C1
F15	DRY STORAGE AREA	F2	W1	C1
F16	REFRIGERATOR 1	F2	W1	C1
F17	REFRIGERATOR 2	F2	W1	C1
F18	FREEZER	F2	W1	C1
F19	COOKING AREA	F1	W1	C1
F20	DISHES STORAGE	F1	W1	C1
F21	DISH WASHING AREA	F1	W2	C1

Finishing Schedule Legend

Floor

F1	300mmX300mm Terrazzo Tiles
F2	SEALED CONCRETE

Wall

W1	3M HIGH CMU PAINTED PLASTER WALL
W2	200mmX300mm glazed ceramic tiles up to 2000mm above F.F.L ON 3M HIGH CMU WALL

Ceiling

C1	PRE ENGINEERING STEEL WORK
C2	FALSE CEILING

NOTE:

1– ALL DIMENSIONS ARE IN MM UNLESS OTHERWISE SPECIFIED.
2– ALL LEVELS ARE IN METER (M) UNLESS OTHERWISE SPECIFIED

U.S. ARMY CORPS OF ENGINEERS
AFGHANISTAN ENGINEER DISTRICT

Symbol	Description	Date	Appr.	Symbol	Description	DATE	Appr.

Contract Date:
FILE NAME:
Drawn BY:
Draw Code:
Plot Date:
Plot Scale: 1:100
Contract No:
Designed BY:
Reviewed by:
Submitted by:
Solicitation No: W917PM-

DEPARTMENT OF THE ARMY
U.S. ARMY CORPS OF ENGINEERS
AFGHANISTAN ENGINEERS DISTRICT
KABUL, AFGHANISTAN

Contractor:
Designer

AFGHAN NATIONAL ARMY (ANA)
Jalalabad , Afghanistan
FY:
PDC:
ANA GARRISON, GAMBERI

DFAC
FIRST FLOOR PLAN

Sheet Reference Number:

01 FIRST FLOOR PLAN
REF. SCALE: 1:100

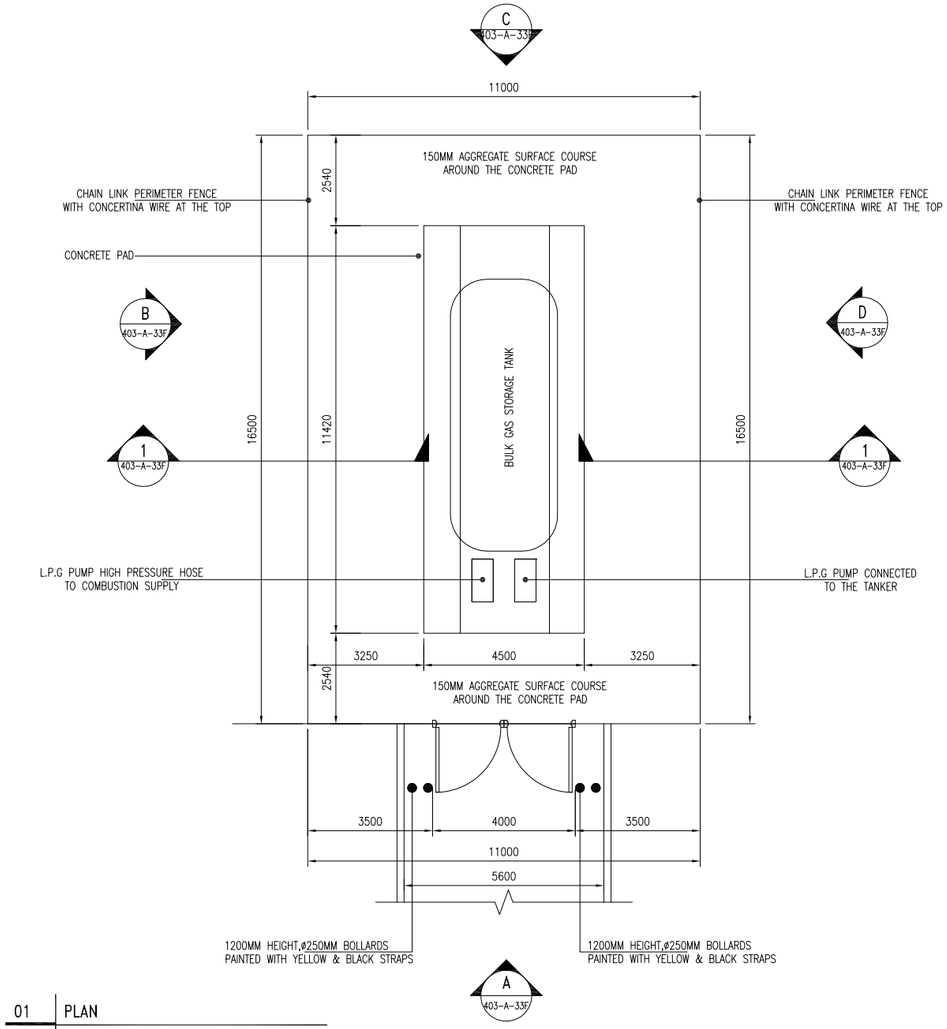

01 PLAN
403-A-33F REF. SCALE: 1:75

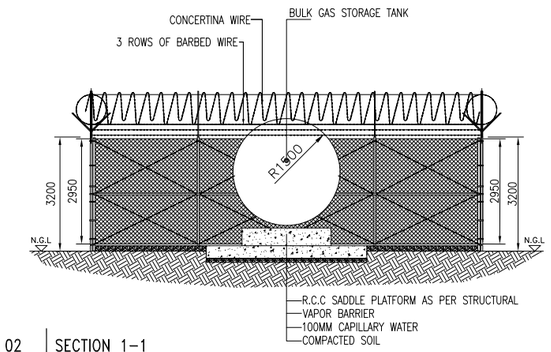

02 SECTION 1-1
403-A-33F REF. SCALE: 1:75

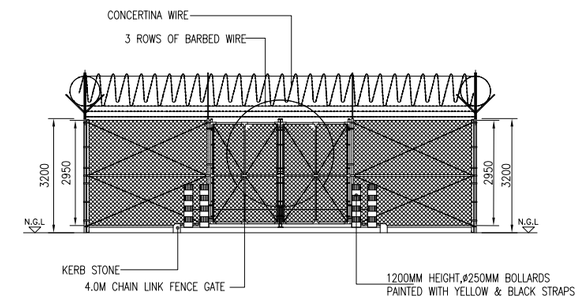

03 ELEVATION A
403-A-33F REF. SCALE: 1:75

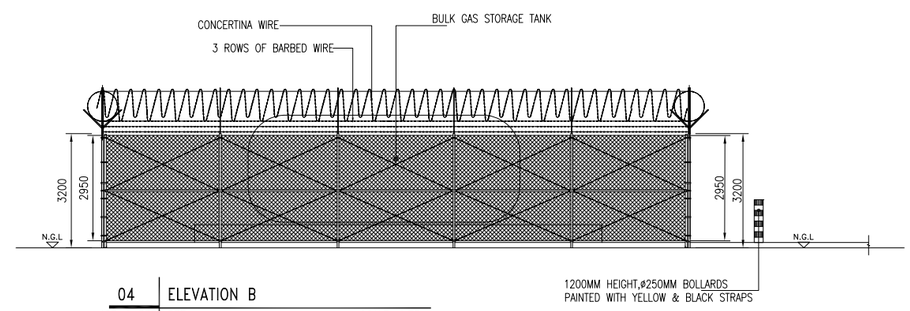

04 ELEVATION B
403-A-33F REF. SCALE: 1:75

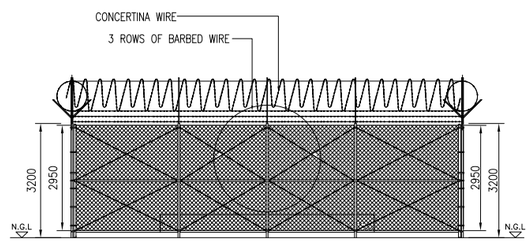

05 ELEVATION C
403-A-33F REF. SCALE: 1:75

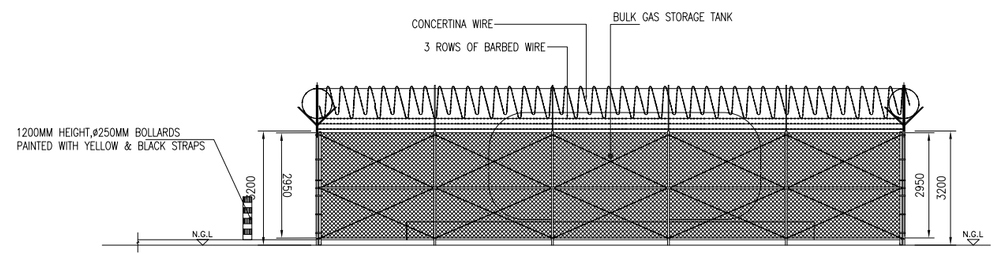

06 ELEVATION D
403-A-33F REF. SCALE: 1:75

10 0 10 20 30 40 50 60 70 80 90

U.S. Army Corps of Engineers
AFGHANISTAN ENGINEERING DISTRICT

Mark	Description	Date	Appr.

Mark	Description	Date	Appr.
3	90% DESIGN SUBMITTAL	20AUG8	
2	65% DESIGN SUBMITTAL	01-04-08	
1	35% DESIGN RESUBMITTAL # 02	25-02-08	
0	35% DESIGN RESUBMITTAL # 01	08-02-08	
	35% DESIGN SUBMITTAL	08-01-08	
	65% CSE PLAN INVESTIGATION	16-12-07	

Designed By: PJWB
Drawn By: REW
Contract Date: 25-11-07
Reviewed By: PJWB
Drawing Code: 403-A-112
File Name: 403-A-112
Submitted By: ROBERT SCAGLIONE P.E.
Plot Date: 20OCT2008
Plot Scale: 1:1
Solicitation No.: W917PM-07-R-0102
Contract No.: W917PM-08-C-0009

DEPARTMENT OF THE ARMY
U.S. ARMY CORPS OF ENGINEERS
AFGHANISTAN ENGINEERS DISTRICT
KABUL, AFGHANISTAN

Contractor: DYNCORP INTERNATIONAL
Designer: APS ADVANCED PROCESS SOLUTIONS
PHONE: 01-208-8-11-0000
EMAIL: APS@APSENGINEERS.COM
ENGINEERS & CONSULTANTS

AFGHAN NATIONAL ARMY (ANA)
ANA GARRISON, GAMBERI
PDC: ANA JALALABAD, AFGHANISTAN
FY:07

DFAC #1 GAS STORAGE
PLAN, SECTION & ELEVATIONS

Sheet Reference Number:
403-A-112
819 OF 849

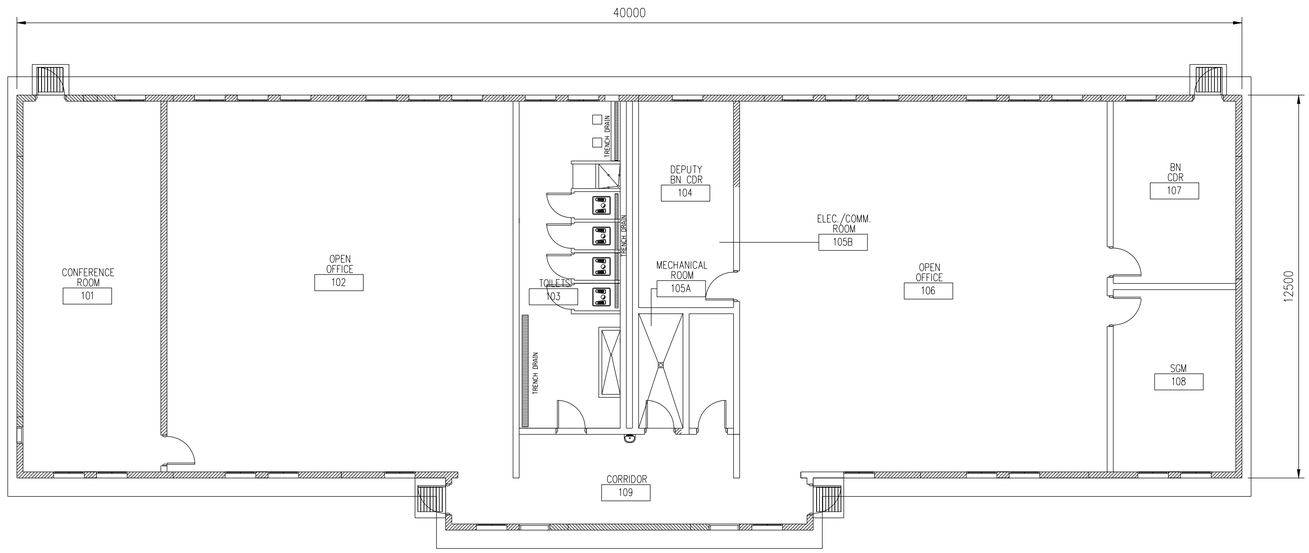

(500 SM) 4.18

US ARMY CORPS OF ENGINEERS AFGHANISTAN ENGINEER DISTRICT

SYMBOL	DESCRIPTION	DATE	APPR.

SYMBOL	DESCRIPTION	DATE	APPR.

DESIGNED BY:
DWN BY:
CKD BY:
REVIEWED BY:
SUBMITTED BY:
DATE: XX/XX/XX
DESIGN FILE NO.
DRAWING CODE:
FILE NAME:
PLOT SCALE: NTS
PLOT DATE: XX-XX-XX
REV.:

U.S. ARMY ENGINEER DISTRICT, AFGHANISTAN
CORPS OF ENGINEERS
APO AE 96338

ENGINEERING AND CONSTRUCTION DIVISION

BATTALION HEADQUARTER BUILDING

SHEET REFERENCE NUMBER:

SHEET --- OF ---

A1 Size 594mm x 841mm

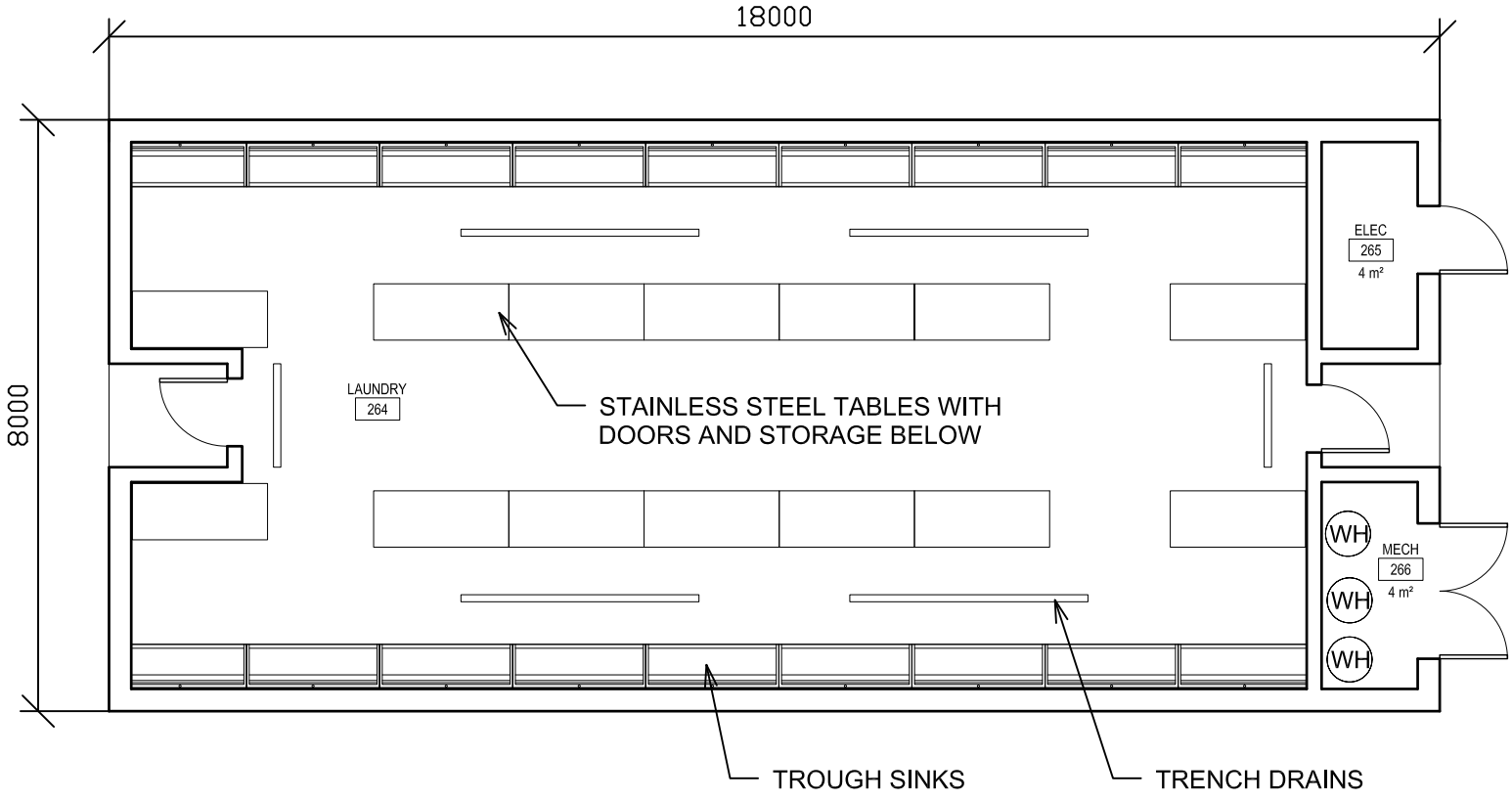

LAUNDRY (144 SM)

US Army Corps of Engineers - Afghanistan Engineer District

LAUNDRY FACILITY	ANA	4.19	Scale	1 : 100
			Date	DEC 2008

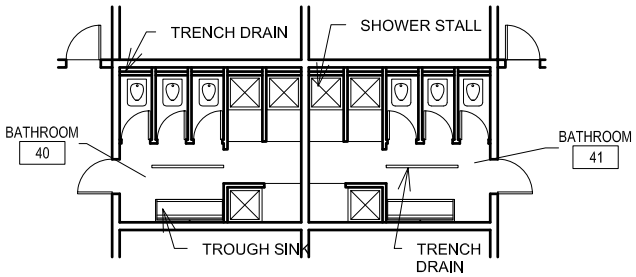

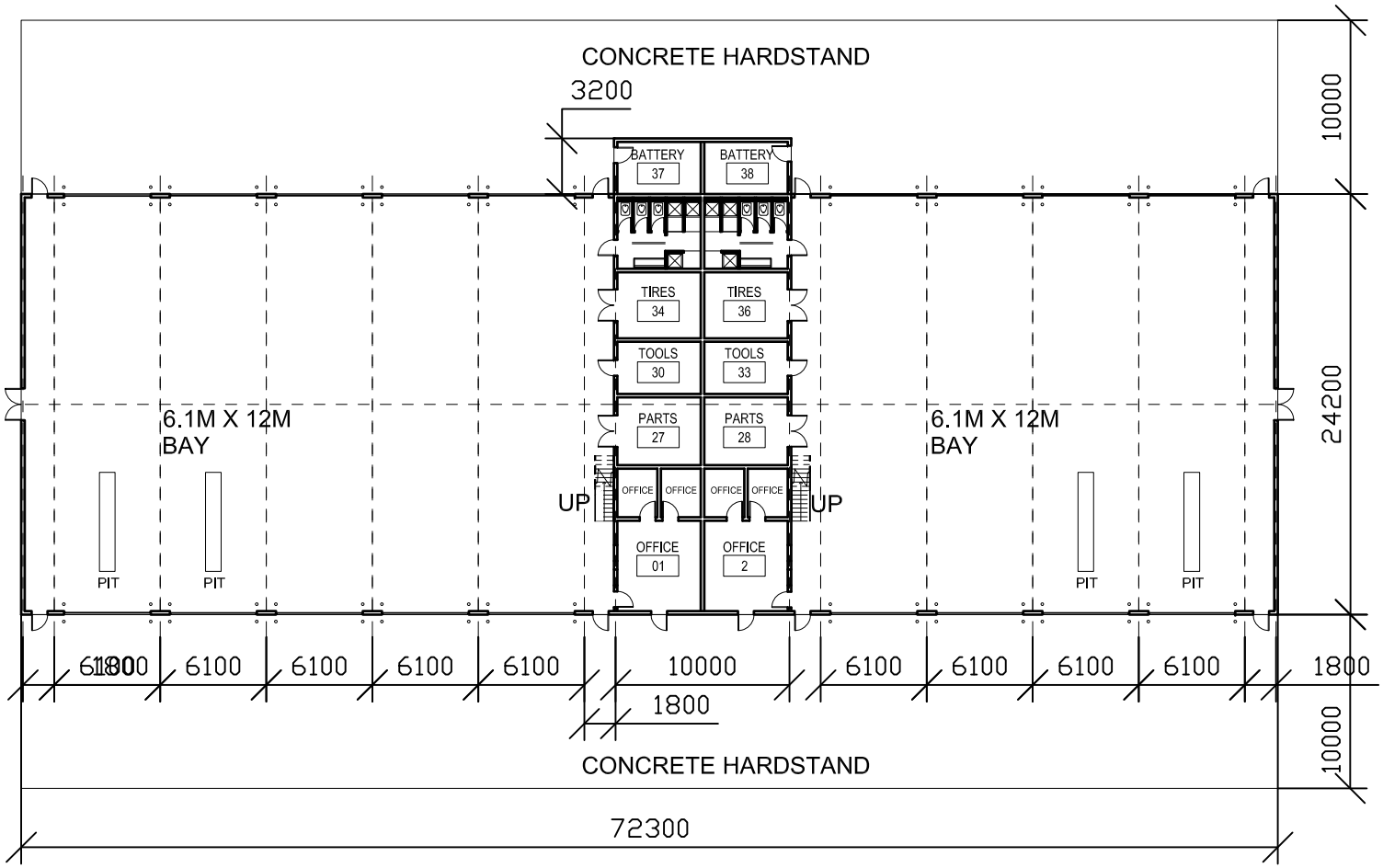

VEHICLE MAINTENANCE BUILDING 18 BAYS (1782 SM)

US Army Corps of Engineers - Afghanistan Engineer District

CSB VEHICLE MAINTENANCE	ANA	4.22	Scale	1 : 400
			Date	DEC 2008

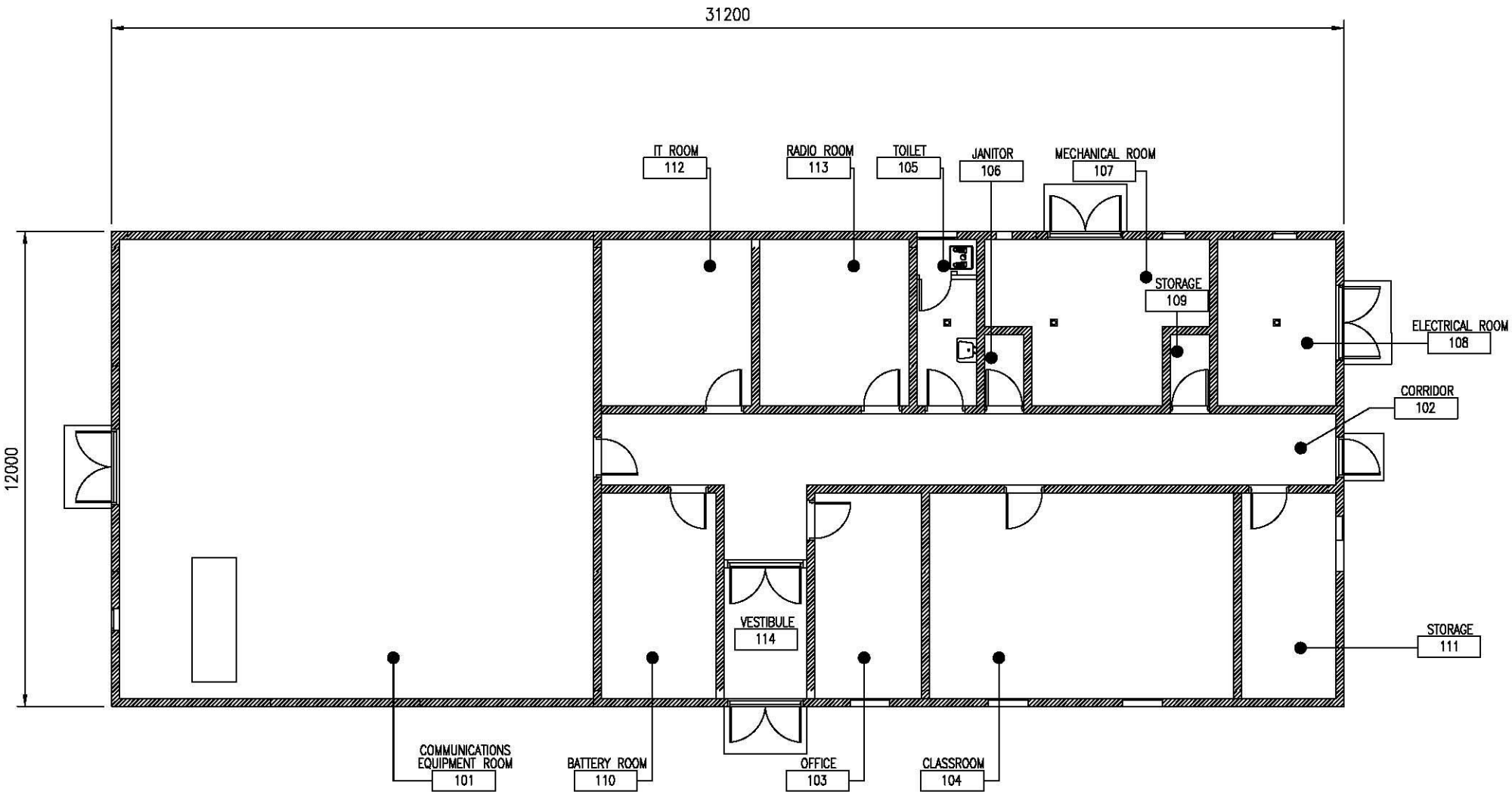

COMMUNICATION BUILDING

APPENDIX 4.23

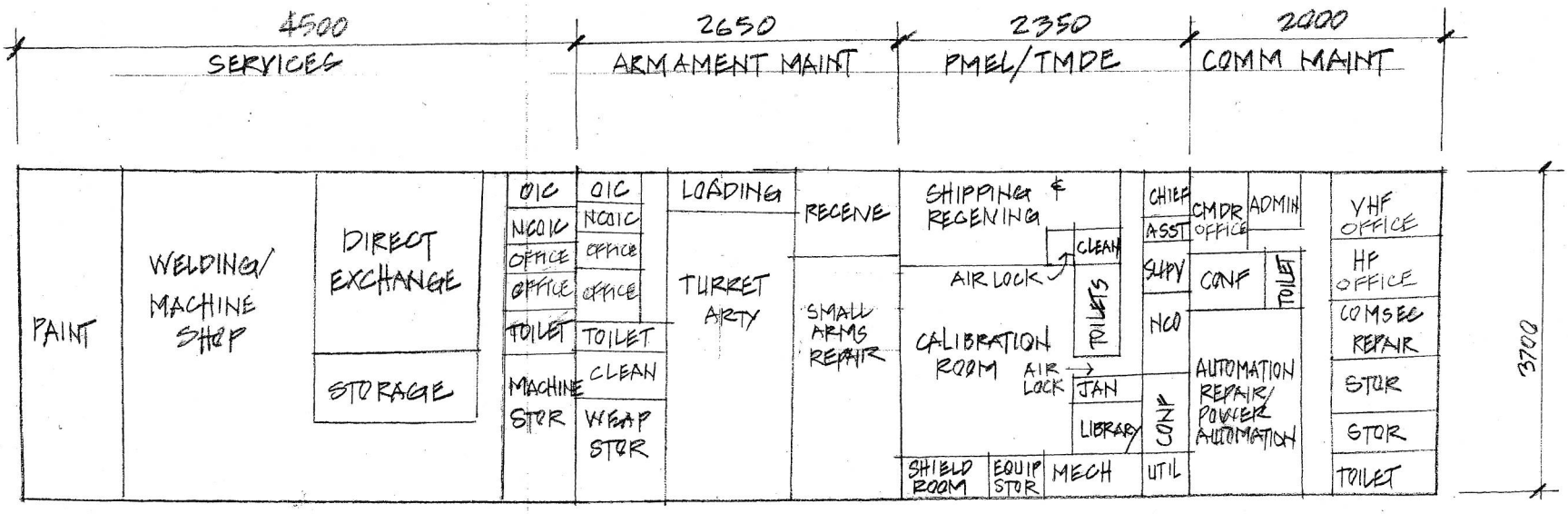

GSE COMM & ARMS MAINT. FAC.

N.T.S.

DA FORM 5172-R, APR 83

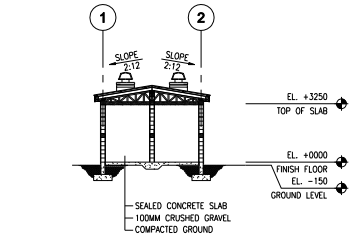

4 CROSS SECTION

PS-A-01 SCALE: 1:100

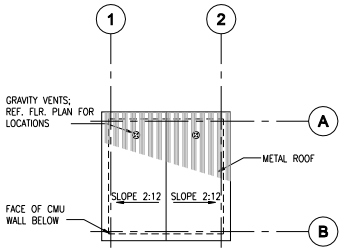

3 ROOF PLAN

PS-A-01 SCALE: 1:100

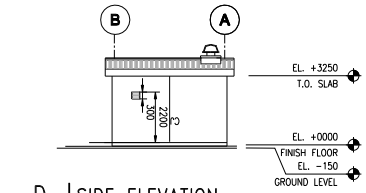

D SIDE ELEVATION

PS-A-01 SCALE: 1:100

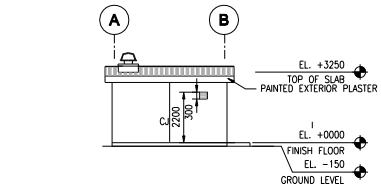

B SIDE ELEVATION

PS-A-01 SCALE: 1:100

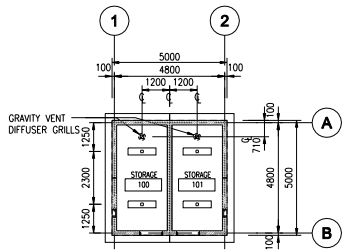

2 REFLECTED CEILING PLAN

PS-A-01 SCALE: 1:100

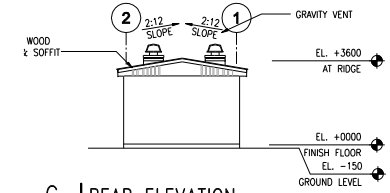

C REAR ELEVATION

PS-A-01 SCALE: 1:100

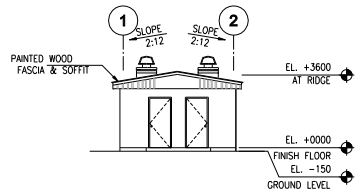

A FRONT ELEVATION

PS-A-01 SCALE: 1:100

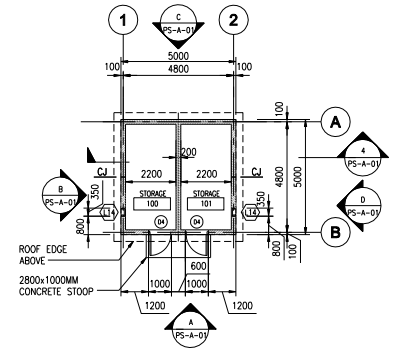

1 FLOOR PLAN

PS-A-01 SCALE: 1:100

FINISHING SCHEDULE LEGEND

FLOOR

F1	SEALED CONCRETE

WALL

W1	WHITE PAINTED PLASTER

CEILING

C2	EXPOSED STRUCTURE - PAINTED

FINISHING SCHEDULE

Room No.	Usage	Floor	Wall	Ceiling
100	STORAGE	F1	W1	C2
101	STORAGE	F1	W1	C2

WALL SYMBOLS:

CMU WALL

CMU CONTROL JOINT

NOTES:

1- ALL WALLS ARE 200MM CMU UNLESS NOTED OTHERWISE

2- ALL INTERIOR WALLS TERMINATE AT CEILING UNLESS NOTED OTHERWISE REF. STRUCT. DWGS.

3- ALL DOOR JAMBS ARE 200MM UNLESS OTHERWISE NOTED .

4- ALL DIMENSIONS ARE TO FACE OF CMU UNLESS NOTED OTHERWISE.

5- ALL VERTICAL DIMENSIONS & LEVELS ARE FROM GROUND FLOOR FINISHED SLAB. THIS ELEVATION IS +0000.

6- SEE DRAWING CO-A-05 & CO-A-06 FOR OPENING SCHEDULE & TYPES.

7- SEE DRAWING CO-A-02, CO-A-03 & CO-A-04 FOR STANDARD DETAILS.

8- SEE STRUCTURAL DRAWINGS FOR LOCATION OF BUILDING CONTROL, EXPANSION AND SEISMIC JOINTS.

9- SEE SHEET CO-E-01 FOR LIGHTING LEGEND.

10-SEE SHEET CO-M-06 FOR HVAC LEGEND.

11-TOTAL AREA OF BUILDING IS 25.0 M2.

1 0 1 2 3 4 5 6 7 8 9
1:100

SYMBOL	DESCRIPTION	DATE	APPR

DESIGNED BY: DATE: 09-17-07
DWN BY: SUBMITTED BY: CHIEF OF DESIGN
CHK BY: FILE NO.: AF0719 1-A-01

US Army Corps of Engineers Transatlantic Programs Center

JALALABAD ANA GARRISON
JALALABAD, AFGHANISTAN

POL BUILDING
POL STORAGE BUILDING
PLANS , SECTION AND ELEVATIONS

SHEET REFERENCE NUMBER:
A-01

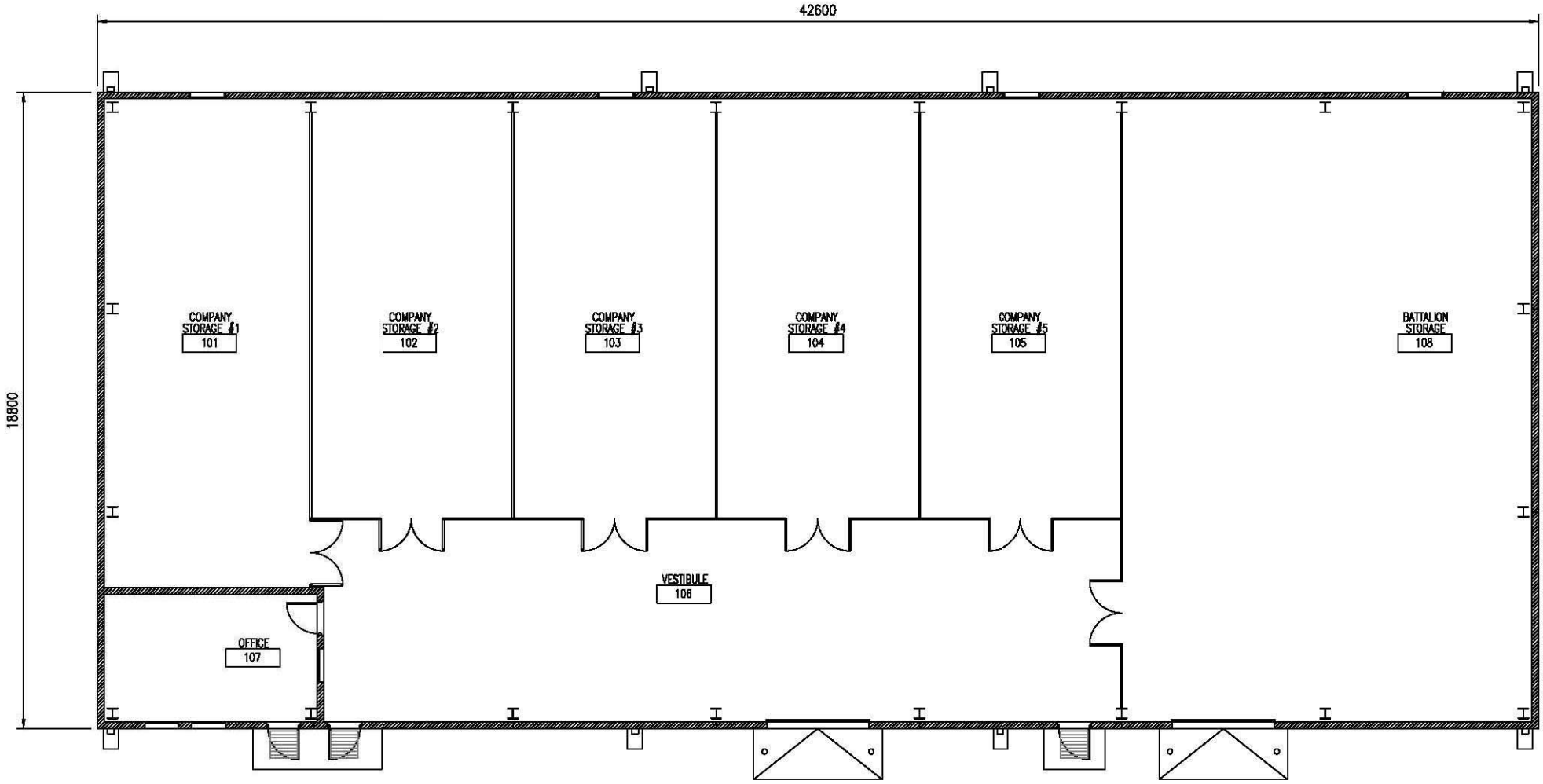

BATTALION STORAGE BUILDING (800 SM)

APPENDIX 4.26

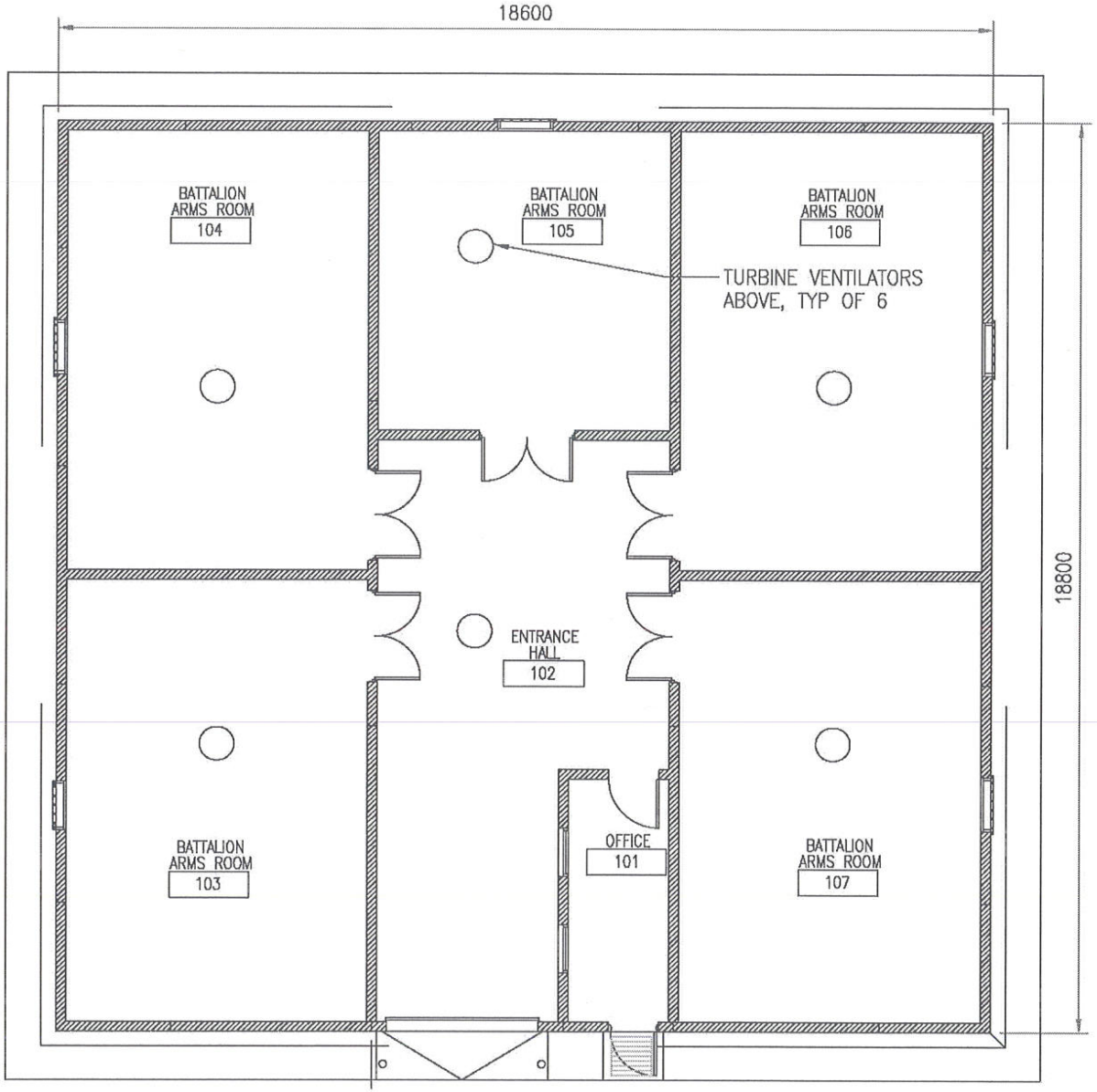

Arms Storage Building

APPENDIX 4.27

NORTH

NOTE:

NORTH ARROW INDICATED REFERS TO THE RELATIVE ORIENTATION OF THIS PLAN. IF FINAL ORIENTATION CHANGES THEN THE RESTROOM ORIENTATIONS MUST CHANGE.

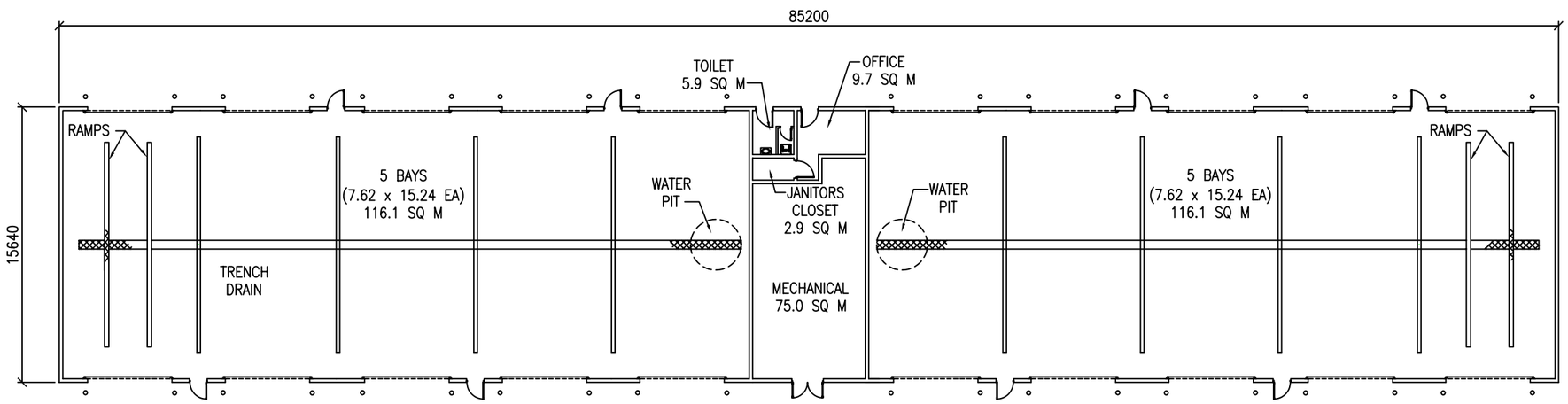

WASH RACK

APPROXIMATE TOTAL AREA = 1292.0 SQ M

0 3000 6000 12000

SCALE: 1 : 300

4.28

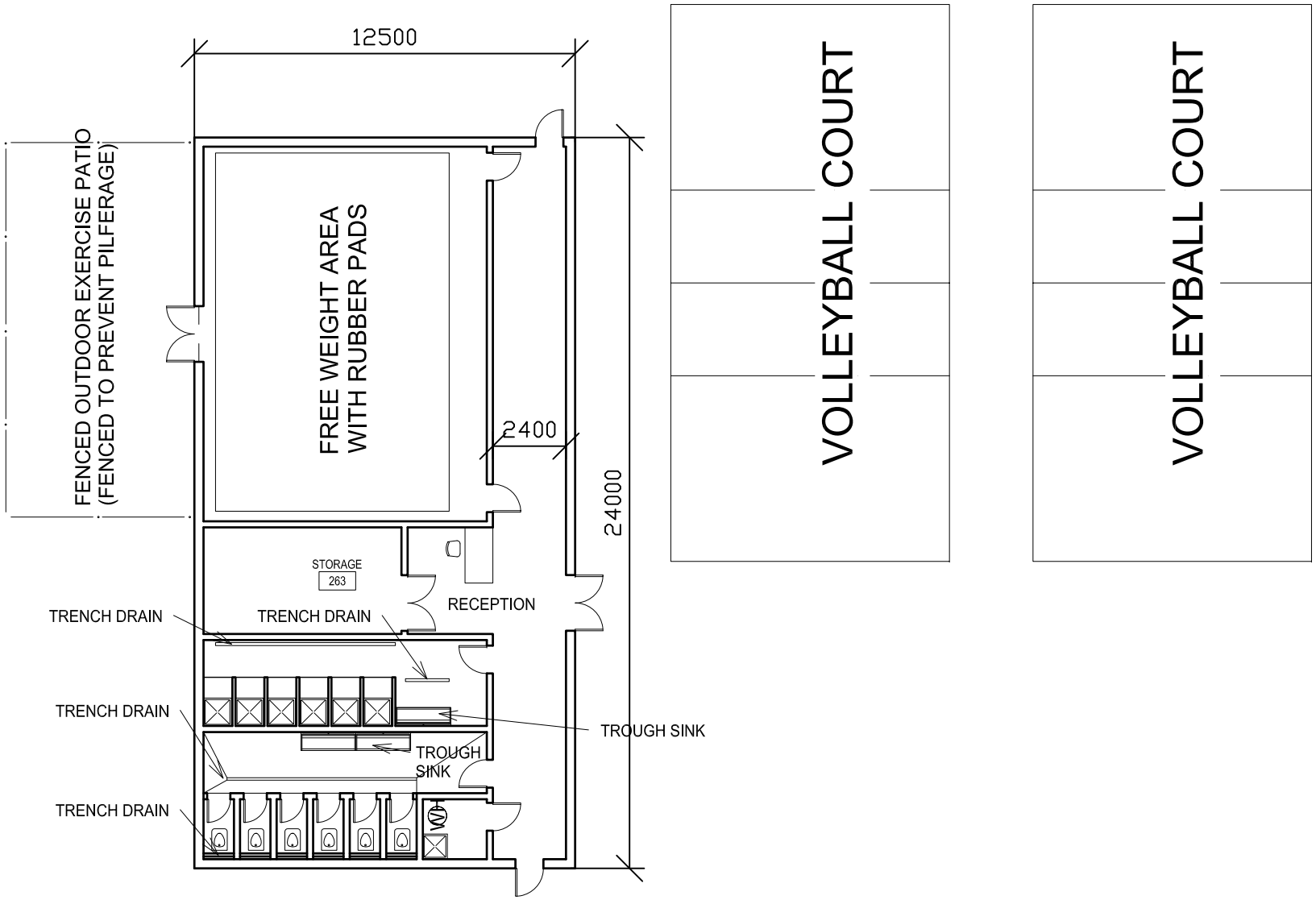

GYM (300 SM)

US Army Corps of Engineers - Afghanistan Engineer District

GYM WITH VOLLEYBALL COURTS	ANA	4.29	Scale	1 : 200
			Date	DEC 2008

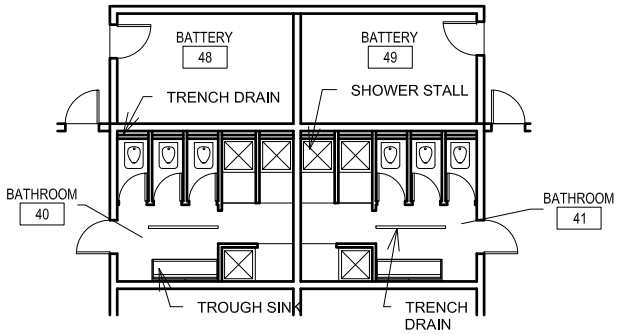

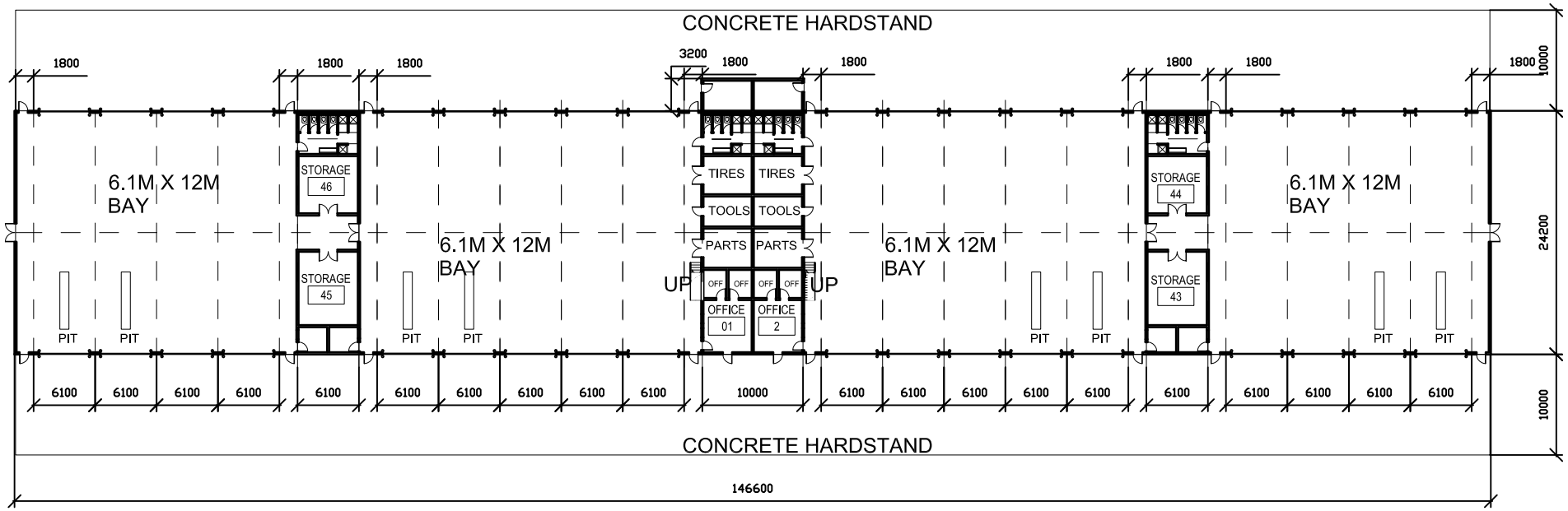

VEHICLE MAINTENANCE BUILDING 36 BAYS (3580 SM)

US Army Corps of Engineers - Afghanistan Engineer District

VEHICLE MAINTENANCE	ANA	4.31	Scale 1 : 600
			Date DECEMBER 2008

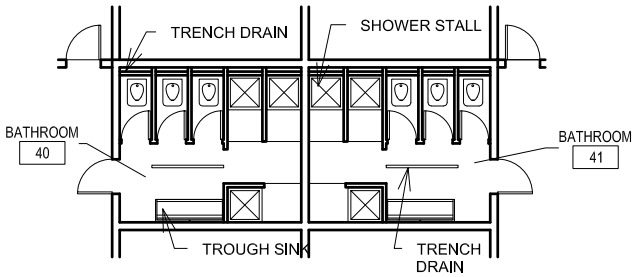

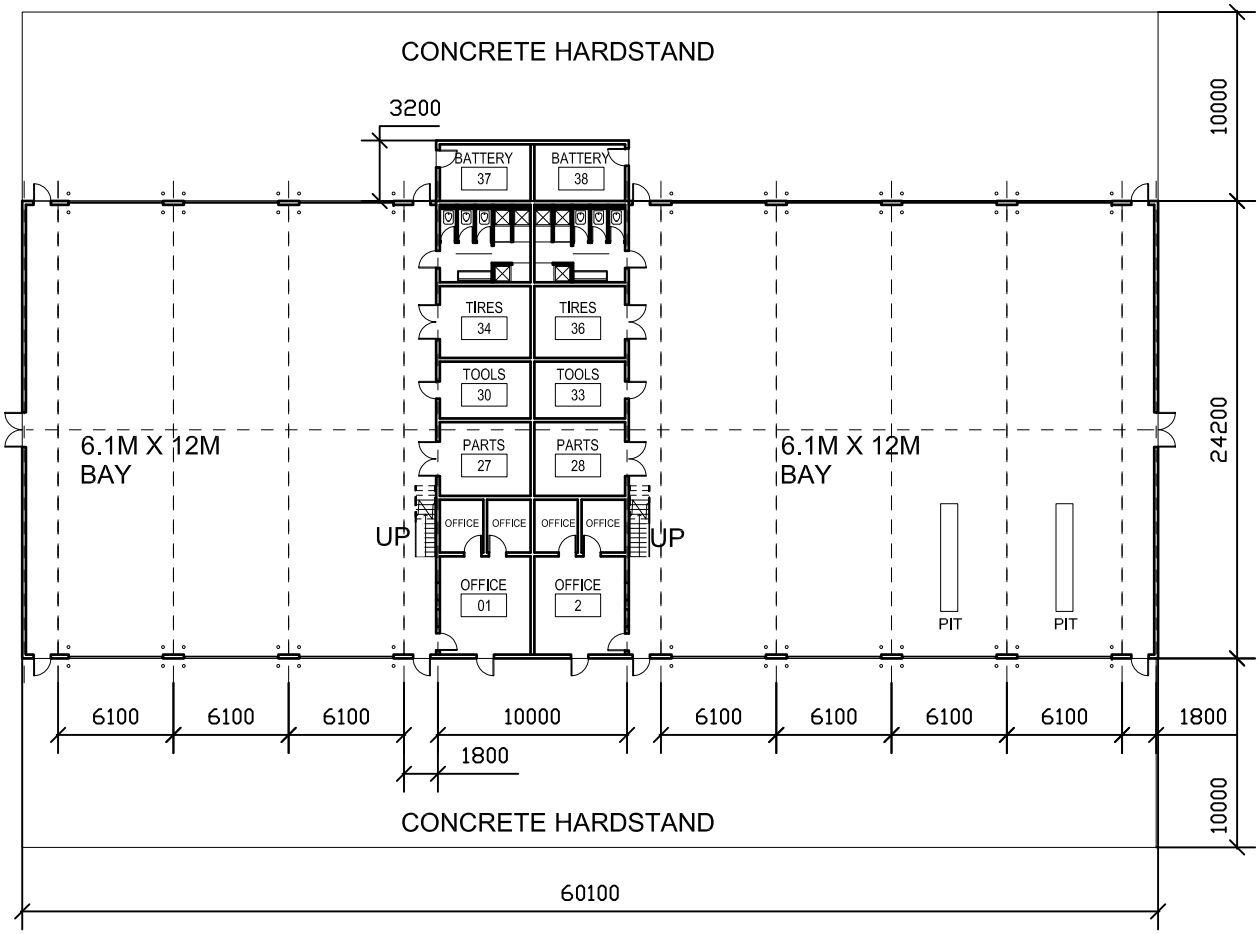

VEHICLE MAINTENANCE BUILDING 14 BAYS (1486 SM)

US Army Corps of Engineers - Afghanistan Engineer District

VEHICLE MAINTENANCE	ANA	4.32	Scale	As indicated
			Date	DEC 2008

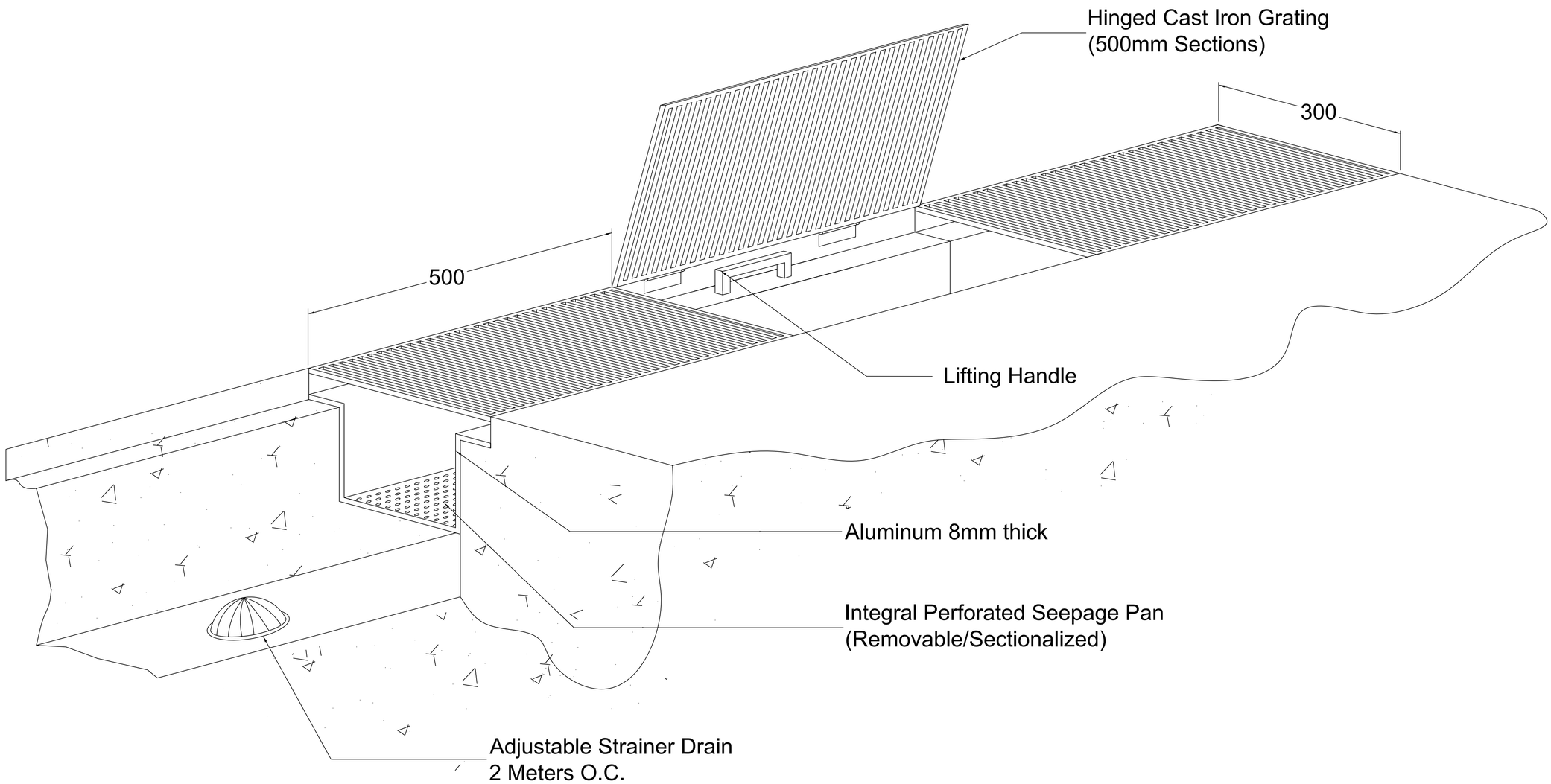

FLOOR TRENCH DETAIL

MECH

Scale

Project number
Date: 30 JULY 2007

Checked by

US ARMY CORPS OF ENGINEERS
AFGHAN ENGR DISTRICT

TRENCH DRAIN DETAIL

HERAT TRANSFORMER ONE LINE DIAGRAM

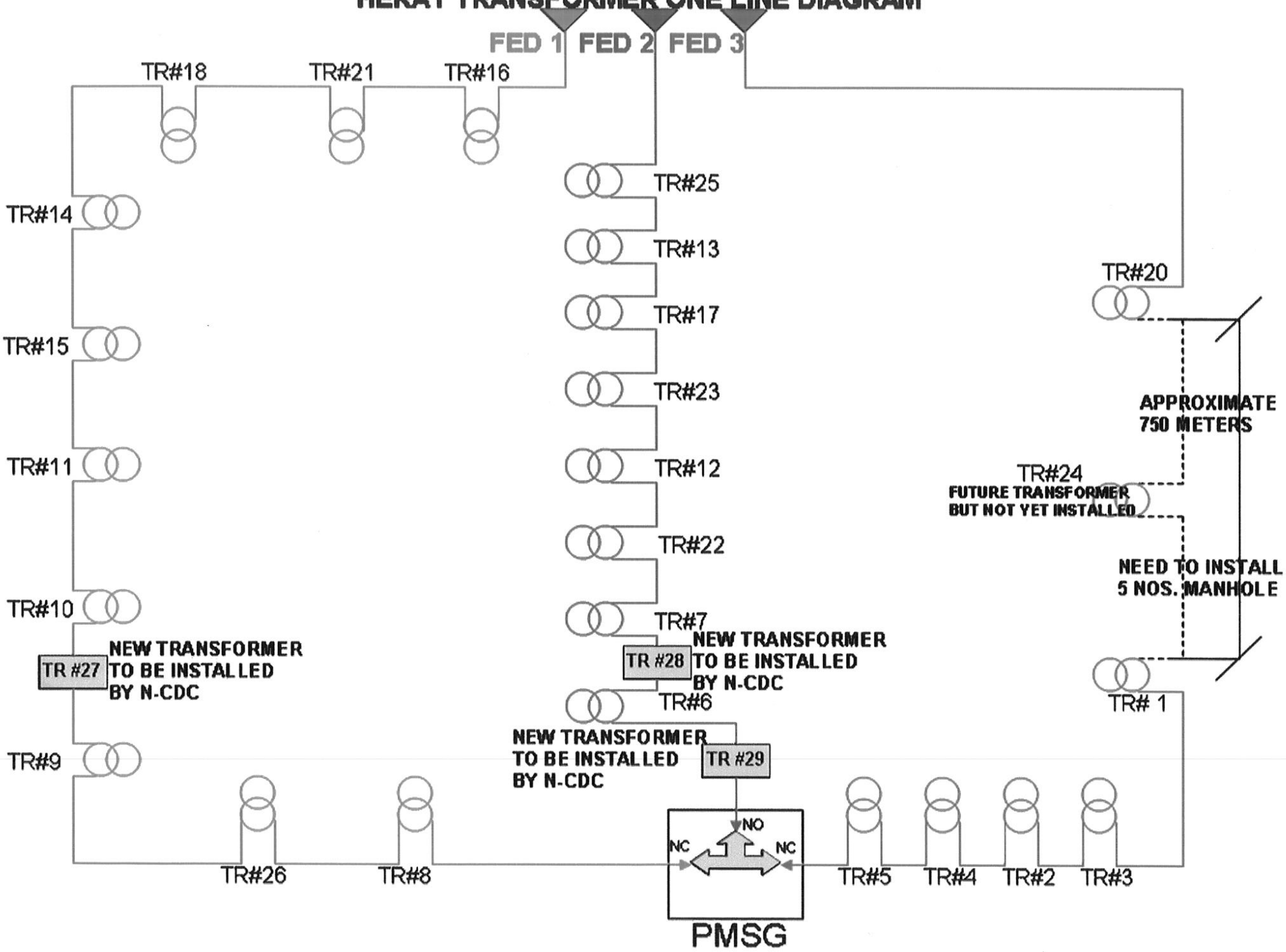

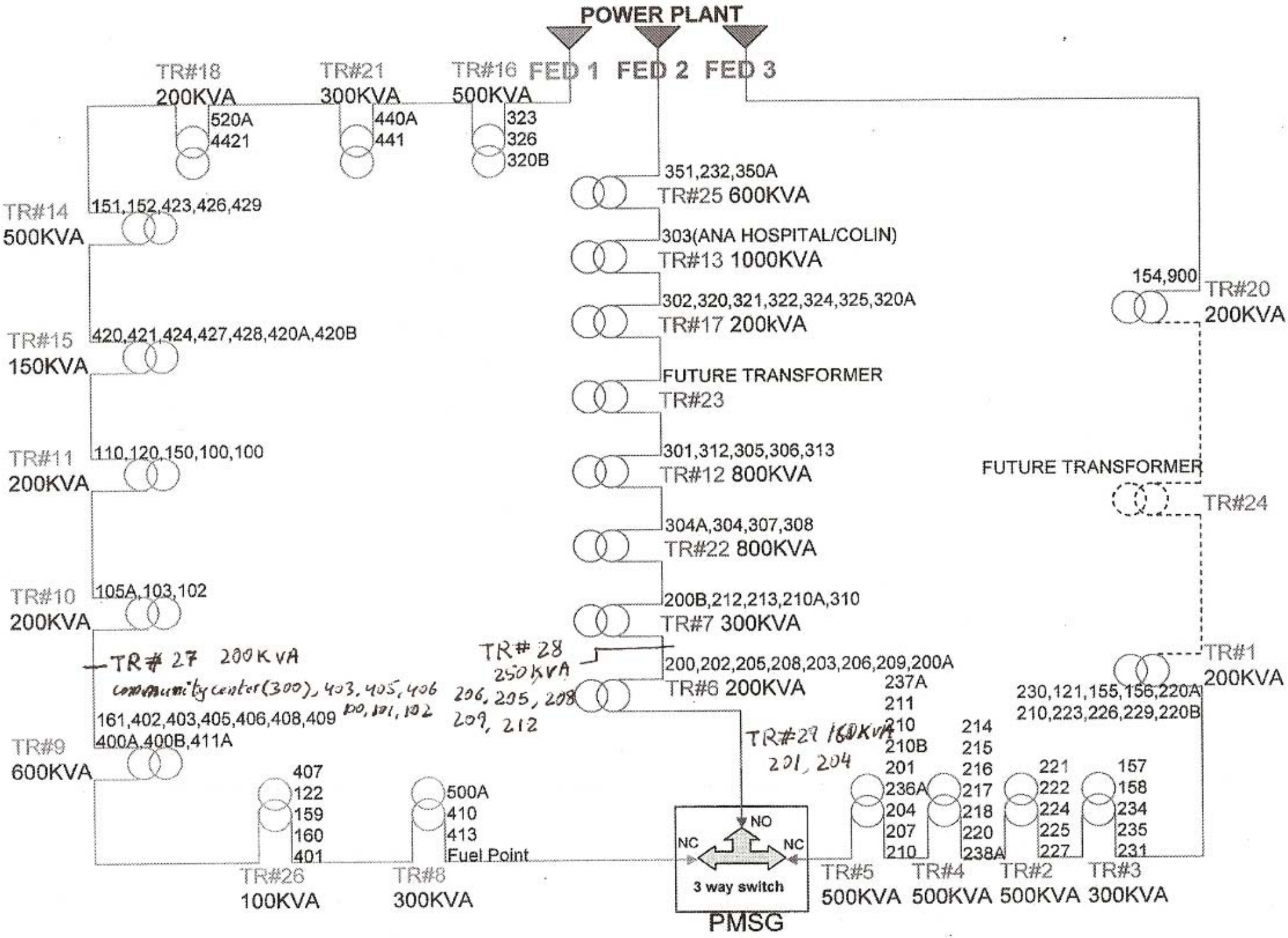

Prepared by: Joel Rodriguez

HERAT TRANSFORMER ONE LINE DIAGRAM

TRANSMITTAL OF SHOP DRAWINGS, EQUIPMENT DATA, MATERIAL SAMPLES, OR MANUFACTURER'S CERTIFICATES OF COMPLIANCE *(Read instructions on the reverse side prior to initiating this form)*	DATE	TRANSMITTAL NO.

SECTION I - REQUEST FOR APPROVAL OF THE FOLLOWING ITEMS *(This section will be initiated by the contractor)*

TO:	FROM:	CONTRACT NO.	CHECK ONE: ☐ THIS IS A NEW TRANSMITTAL ☐ THIS IS A RESUBMITTAL OF TRANSMITTAL _____
SPECIFICATION SEC. NO. *(Cover only one section with each transmittal)*	PROJECT TITLE AND LOCATION		CHECK ONE: THIS TRANSMITTAL IS FOR ☐ FIO ☐ GOV'T. APPROVAL

ITEM NO. *a.*	DESCRIPTION OF ITEM SUBMITTED *(Type size, model number/etc.)* *b.*	MFG OR CONTR. CAT., CURVE DRAWING OR BROCHURE NO. *(See instruction no. 8)* *c.*	NO. OF COPIES *d.*	CONTRACT REFERENCE DOCUMENT		FOR CONTRACTOR USE CODE *g.*	VARIATION *(See instruction No. 6)* *h.*	FOR CE USE CODE *i.*
				SPEC. PARA. NO. *e.*	DRAWING SHEET NO. *f.*			

REMARKS	I certify that the above submitted items have been reviewed in detail and are correct and in strict conformance with the contract drawings and specifications except as other wise stated. _____ NAME AND SIGNATURE OF CONTRACTOR

SECTION II - APPROVAL ACTION

ENCLOSURES RETURNED *(List by Item No.)*	NAME, TITLE AND SIGNATURE OF APPROVING AUTHORITY	DATE

INSTRUCTIONS

1. Section I will be initiated by the Contractor in the required number of copies.

2. Each transmittal shall be numbered consecutively in the space provided for "Transmittal No.". This number, in addition to the contract number, will form a serial number for identifying each submittal. For new submittals or resubmittals mark the appropriate box; on resubmittals, insert transmittal number of last submission as well as the new submittal number.

3. The "Item No." will be the same "Item No." as indicated on ENG FORM 4288-R for each entry on this form.

4. Submittals requiring expeditious handling will be submitted on a separate form.

5. Separate transmittal form will be used for submittals under separate sections of the specifications.

6. A check shall be placed in the "Variation" column when a submittal is not in accordance with the plans and specifications--also, a written statement to that effect shall be included in the space provided for "Remarks".

7. Form is self-transmittal, letter of transmittal is not required.

8. When a sample of material or Manufacturer's Certificate of Compliance is transmitted, indicate "Sample" or "Certificate" in column c, Section I.

9. U.S. Army Corps of Engineers approving authority will assign action codes as indicated below in space provided in Section I, column i to each item submitted. In addition they will ensure enclosures are indicated and attached to the form prior to return to the contractor. The Contractor will assign action codes as indicated below in Section I, column g, to each item submitted.

THE FOLLOWING ACTION CODES ARE GIVEN TO ITEMS SUBMITTED

A	--	Approved as submitted.	E	--	Disapproved (See attached).
B	--	Approved, except as noted on drawings.	F	--	Receipt acknowledged.
C	--	Approved, except as noted on drawings. Refer to attached sheet resubmission required.	FX	--	Receipt acknowledged, does not comply as noted with contract requirements.
D	--	Will be returned by separate correspondence.	G	--	Other *(Specify)*

10. Approval of items does not relieve the contractor from complying with all the requirements of the contract plans and specifications.

(Reverse of ENG Form 4025-R)

Contractor - Furnished Design Documents Submittal Register	Contract Title & Location:	
	Contractor:	Contract Number:

Submittal Identification Nº.	NAS Activity Code	Description of Document (s)	Contractor Submittal Date	Government Action	
				Receipt Date	Construction Clearance Date

TAC Form 122-E
September 2003(R)

SUBMITTAL REGISTER

(ER 415 1-10)

CONTRACT NO.

TITLE AND LOCATION

CONTRACTOR

SPECIFICATION SECTION

ACTIVITY NO a.	TRANS-MITTAL NO. b.	ITEM NO c.	SPECIFICATION PARAGRAPH NUMBER d.	DESCRIPTION OF ITEM SUBMITTED e.	TYPE OF SUBMITTAL: DATA f.	DRAWINGS g.	INSTRUCTIONS h.	SCHEDULES i.	STATEMENTS j.	REPORTS k.	CERTIFICATES l.	SAMPLES m.	RECORDS n.	CLASSIFICATION: INFORMATION ONLY o.	GOVERNMENT APPROVED p.	REVIEWER q.	CONTRACTOR SCHEDULE DATES: SUBMIT r.	APPROVAL NEEDED BY s.	MATERIAL NEEDED BY t.	CONTRACTOR ACTION: CODE u.	DATE v.	SUBMIT TO GOVERN-MENT w.	GOVERNMENT ACTION: CODE x.	DATE y.	REMARKS z.

ENG FORM 4288-R, MAR 95 EDITION OF SEP 93 IS OBSOLETE. PAGE 1 OF ____ PAGES (Proponent: CEMP-CE)

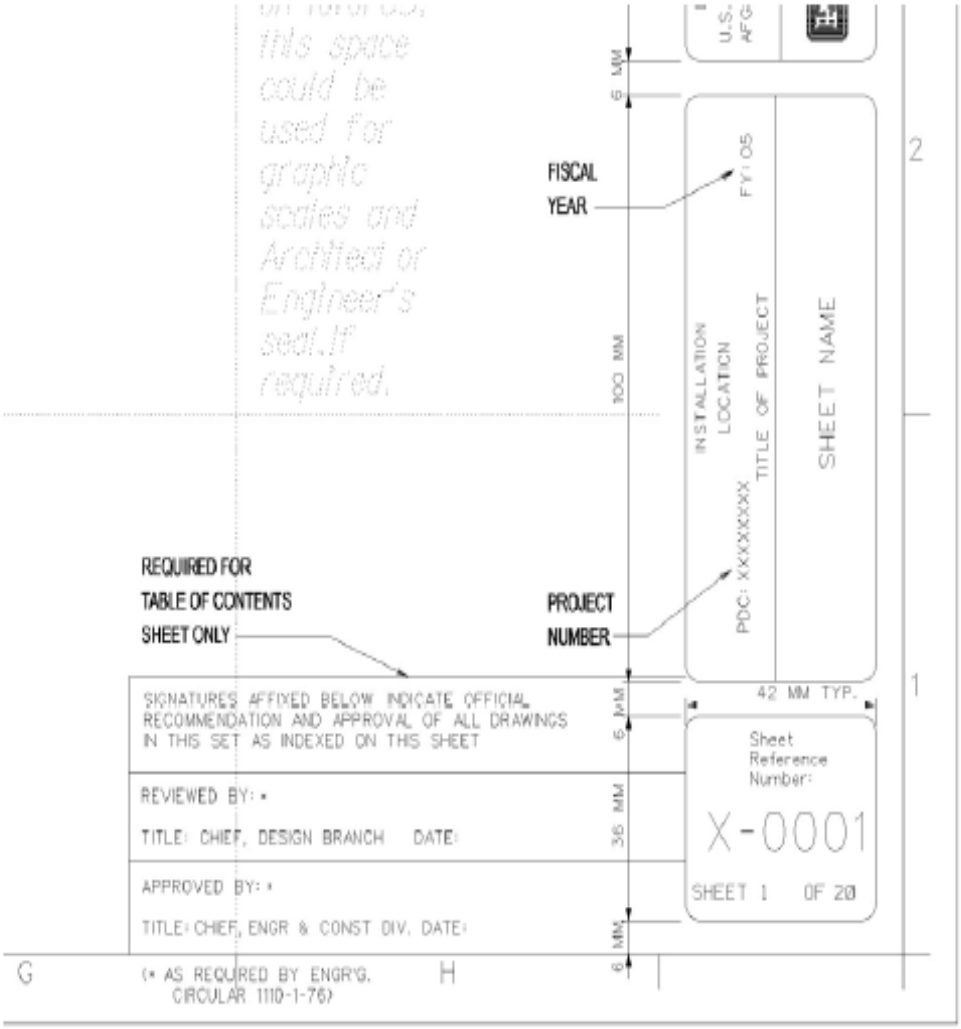

Figure 1- AED Title Block sheet number/description

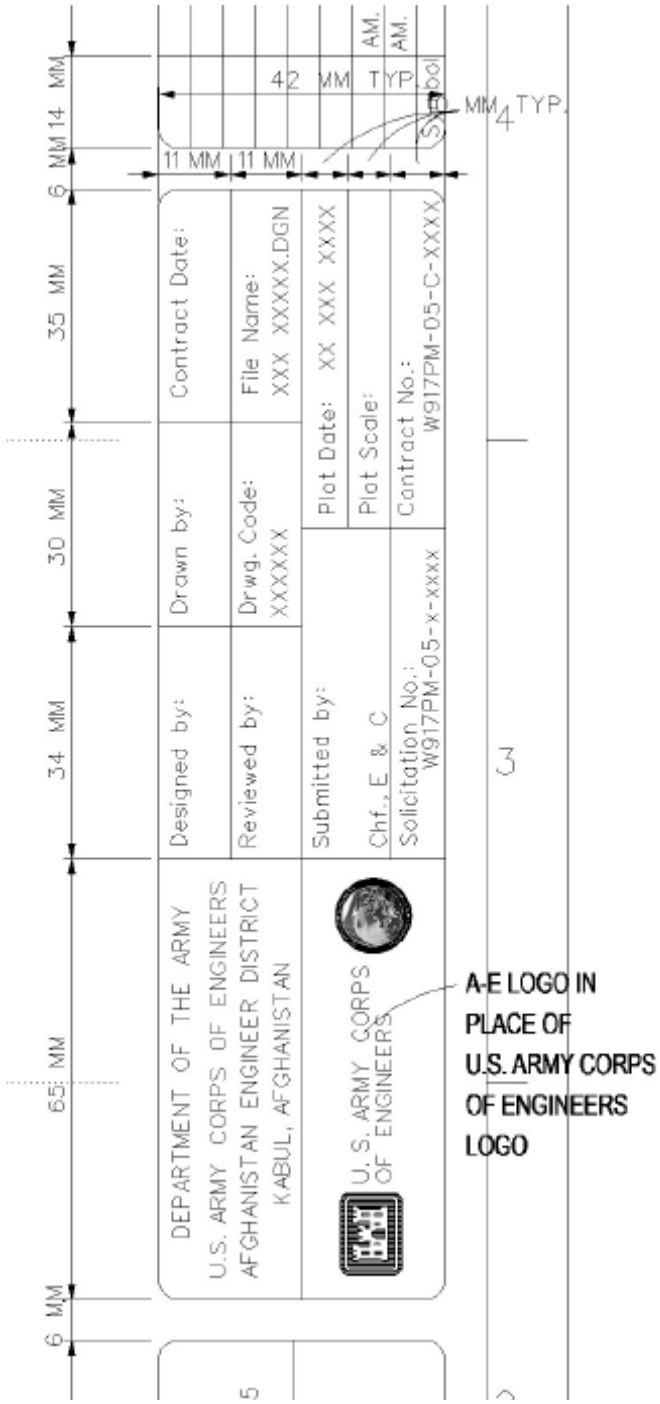

Figure 2- AED Title Block- A-E logo/designed by/reviewed by/submitted by

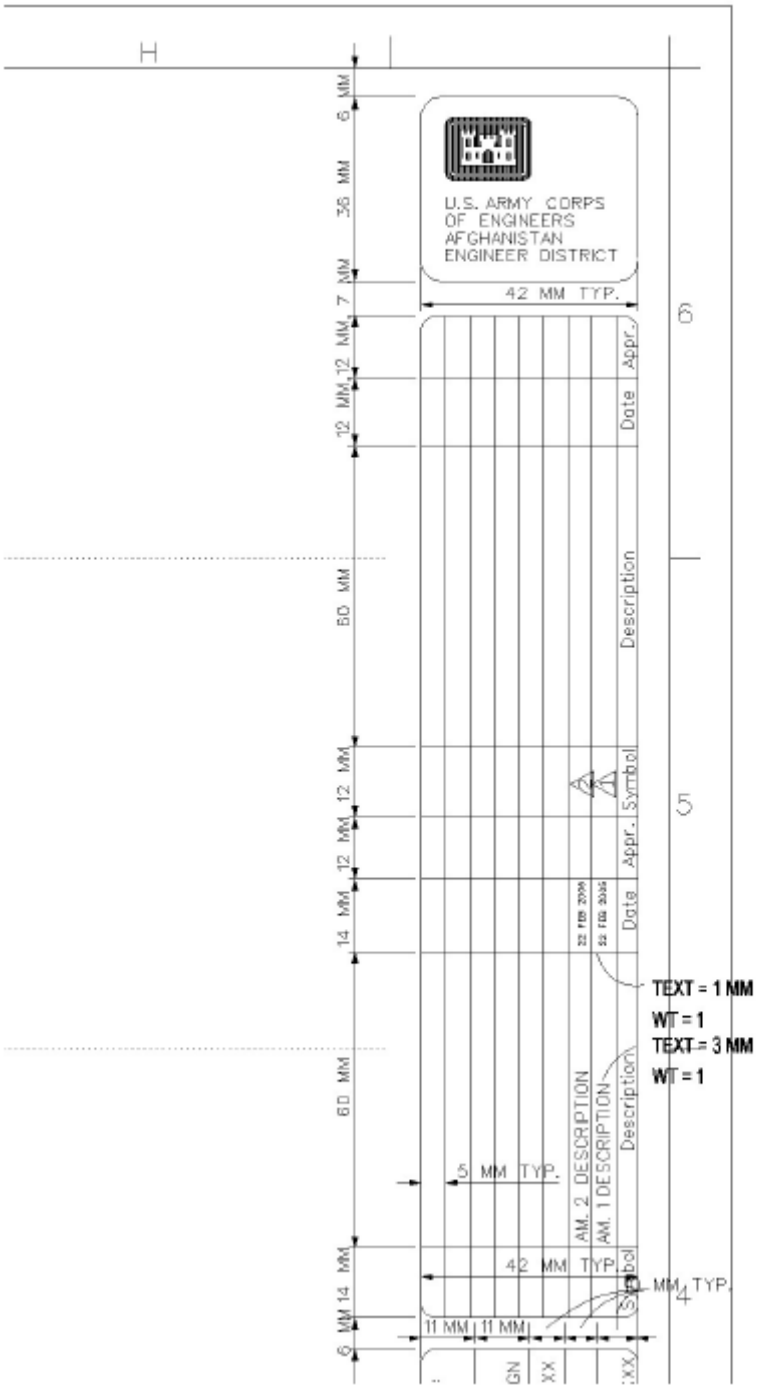

Figure 3- AED Title Block-Revisions Block Dimensioning

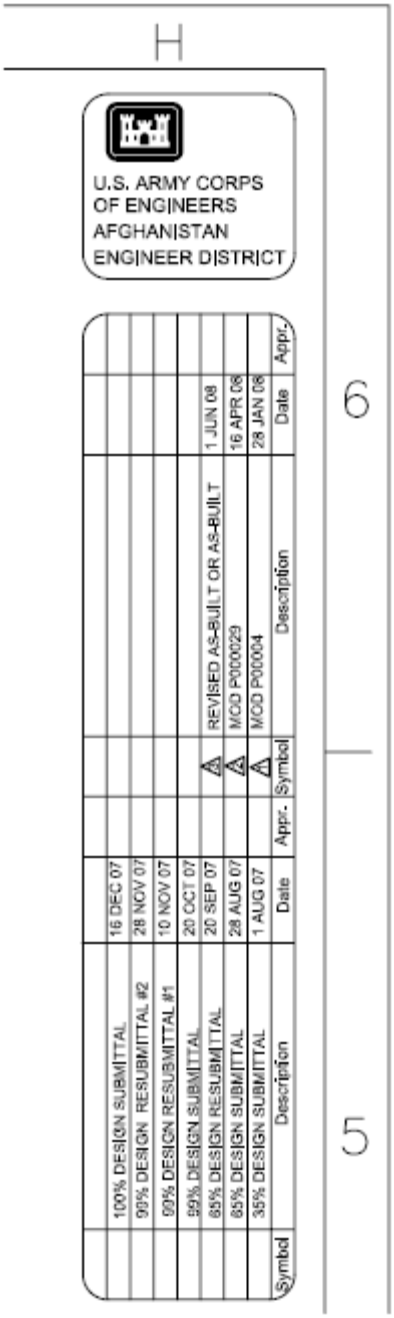

Figure 4- AED Title Block-Revisions Block Required Notations

FINISHED FORMAT SIZE

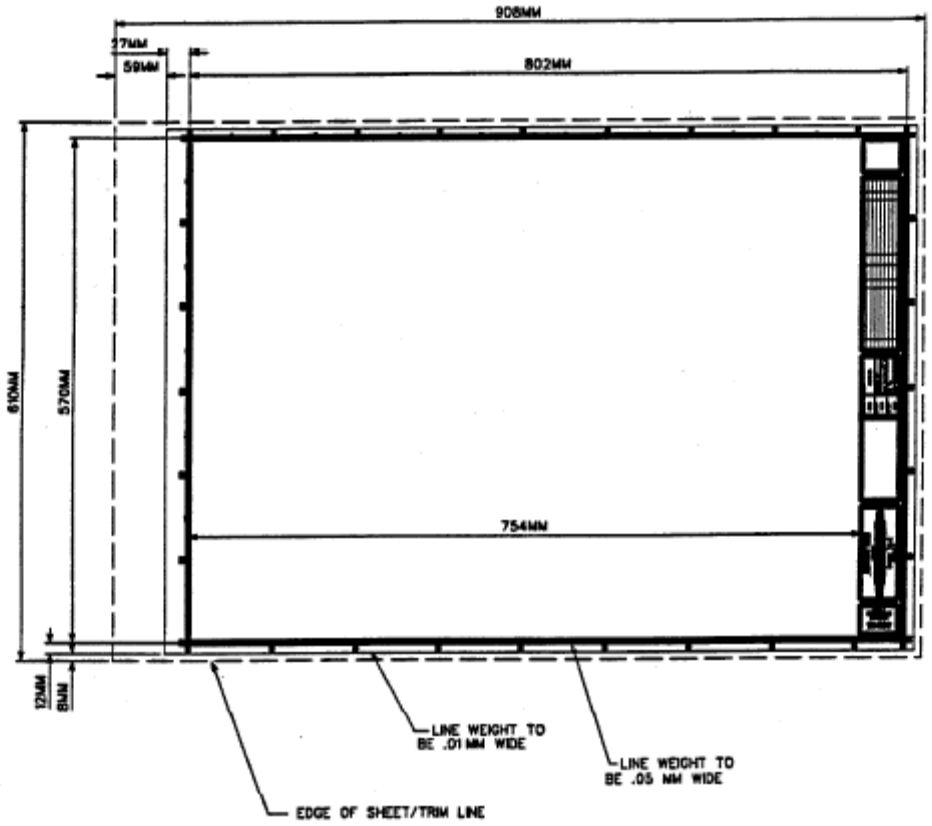

NOTES:

1. SEE FIGURES 6 THRU 9 FOR TITLE BLOCK DEFINITIONS.

Figure 5