Solicitation no. W917PM-09-R-0116

**US Army Corps**
**of Engineers**
**Afghanistan Engineer District**

# ANP UP District HQs – 1 Story

Lashkar Gar, Hemand Province, Afghanistan

# Site Adapt Design/Build Project Specifications And Drawings

## Proposal Requirements, Contract Forms, Conditions of the Contract

August 2009

**THIS IS A SINGLE-PHASE REQUEST FOR PROPOSAL**

**TABLE OF CONTENTS**

DESIGN BUILD SPECIFICATIONS
FOR
1 Story UP District HQs, Lashkar Gar, Helmand Province, Afghanistan


| Section | Title |
|---|---|
| 00010 | Proposal Schedule |
| 00110 | Proposal Preparation |
| 00120 | Proposal Evaluation and Contract Award |
| 00150 | The Design/Build Process |
| 00555 | Design Concept Documents |
| 01010 | Scope of Work |
| 01015 | Technical Requirements |
| 01060 | Special Clauses |
| 01312 | Quality Control System |
| 01321 | Project Schedule |
| 01335 | Submittal Procedures for Design-Build Projects |
| 01415 | Metric Measurements |
| 01451 | Contractor Quality Control |
| 01525 | Safety and Occupational Health Requirements |
| 01770 | Closeout Procedures |
| 01780A | Closeout Submittals |
| 01781 | Operation and Maintenance Data |
| 01335a | Attachments AED |
| AED Design Requirements | Sanitary Sewer and Septic Systems |

| | |
|---|---|
| APPENDIX A | ANP District HQs (1-Story) dated 4 Feb 09 |
| Site Assessment | Site Assessment Survey |

| SOLICITATION, OFFER, AND AWARD *(Construction, Alteration, or Repair)* | 1. SOLICITATION NO. W917PM-09-R-0116 | 2. TYPE OF SOLICITATION [ ] SEALED BID (IFB) [X] NEGOTIATED *(RFP)* | 3. DATE ISSUED 26-Aug-2009 | PAGE OF PAGES 1 OF 230 |
|---|---|---|---|---|

**IMPORTANT - The "offer" section on the reverse must be fully completed by offeror.**

| 4. CONTRACT NO. | 5. REQUISITION/PURCHASE REQUEST NO. W26WKS90295313 | 6. PROJECT NO. PDHS020501DH |
|---|---|---|

| 7. ISSUED BY CODE W917PM | 8. ADDRESS OFFER TO *(If Other Than Item 7)* CODE |
|---|---|
| AFGHANISTAN ENGINEER DISTRICT<br>US ARMY CORPS OF ENGINEERS<br>KABUL<br>APO AE 09356<br><br>TEL: FAX: | **See Item 7**<br><br>TEL: FAX: |

| 9. FOR INFORMATION CALL: | A. NAME PAUL C DAUGHERTY | B. TELEPHONE NO. *(Include area code)* *(NO COLLECT CALLS)* |
|---|---|---|

**SOLICITATION**

**NOTE: In sealed bid solicitations "offer" and "offeror" mean "bid" and "bidder".**

10. THE GOVERNMENT REQUIRES PERFORMANCE OF THE WORK DESCRIBED IN THESE DOCUMENTS *(Title, identifying no., date):*

ANP Lashkar Gah 1-Story

Afghan First 100% Set-aside: The US Government is setting aside this procurement for firms that are incorporated in the nation of Afghanistan. Foreign firms cannot be the prime but may act as a subcontractor. At least 50% of the requirement must be accomplished by an Afghan firm using predominately Afghan labor and materials. See DFARS 252.225-7026 Acquisition Restricted to Products or Services of Afghanistan

This project consists of the design and construction of Afghanistan National Police (ANP) Uniformed Police District Headquarters facilities (approximately 600 SM in size) to be located at Lashkar Gar, Helmand Province, Afghanistan. This project is defined as the management, planning, design, material, labor, and equipment, to site adapt and construct all utilities, vehicular access, buildings, force protection measures, site security, de-mining activities, and other features as referenced herein.

This procurement is contingent upon the availability of funds. See FAR 52.232-18 AVAILABILITY OF FUNDS

The magnitude of this procurement is between $1,000,000 and $5,000,000.
The NAICS Code for this procurement is 236220.

11. The Contractor shall begin performance within 10 calendar days and complete it within 353 calendar days after receiving [ ] award, [X] notice to proceed. This performance period is [X] mandatory, [ ] negotiable. *(See* 52.211-10 *.)*

| 12 A. THE CONTRACTOR MUST FURNISH ANY REQUIRED PERFORMANCE AND PAYMENT BONDS? *(If "YES," indicate within how many calendar days after award in Item 12B.)* [ ] YES [X] NO | 12B. CALENDAR DAYS |
|---|---|

13. ADDITIONAL SOLICITATION REQUIREMENTS:

A. Sealed offers in original and 2 copies to perform the work required are due at the place specified in Item 8 by 05:00 PM *(hour)* local time 17 Sep 2009 *(date).* If this is a sealed bid solicitation, offers must be publicly opened at that time. Sealed envelopes containing offers shall be marked to show the offeror's name and address, the solicitation number, and the date and time offers are due.

B. An offer guarantee [ ] is, [X] is not required.

C. All offers are subject to the (1) work requirements, and (2) other provisions and clauses incorporated in the solicitation in full text or by reference.

D. Offers providing less than 120 calendar days for Government acceptance after the date offers are due will not be considered and will be rejected.

## SOLICITATION, OFFER, AND AWARD (Continued)

*(Construction, Alteration, or Repair)*

**OFFER** ***(Must be fully completed by offeror)***

| 14. NAME AND ADDRESS OF OFFEROR *(Include ZIP Code)* | | 15. TELEPHONE NO. *(Include area code)* |
|---|---|---|
| | | 16. REMITTANCE ADDRESS *(Include only if different than Item 14)*<br>**See Item 14** |
| CODE | FACILITY CODE | |

17. The offeror agrees to perform the work required at the prices specified below in strict accordance with the terms of this solicitation, if this offer is accepted by the Government in writing within _____ calendar days after the date offers are due. *(Insert any number equal to or greater than the minimum requirements stated in Item 13D. Failure to insert any number means the offeror accepts the minimum in Item 13D.)*

| AMOUNTS | SEE SCHEDULE OF PRICES |
|---|---|

18. The offeror agrees to furnish any required performance and payment bonds.

19. ACKNOWLEDGMENT OF AMENDMENTS

*(The offeror acknowledges receipt of amendments to the solicitation -- give number and date of each)*

| AMENDMENT NO. | | | | | | | | | | |
|---|---|---|---|---|---|---|---|---|---|---|
| DATE | | | | | | | | | | |

| 20A. NAME AND TITLE OF PERSON AUTHORIZED TO SIGN OFFER *(Type or print)* | 20B. SIGNATURE | 20C. OFFER DATE |
|---|---|---|
| | | |

**AWARD** ***(To be completed by Government)***

21. ITEMS ACCEPTED:

| 22. AMOUNT | 23. ACCOUNTING AND APPROPRIATION DATA |
|---|---|
| | |

| 24. SUBMIT INVOICES TO ADDRESS SHOWN IN *(4 copies unless otherwise specified)* | **ITEM** | 25. OTHER THAN FULL AND OPEN COMPETITION PURSUANT TO<br>☐ 10 U.S.C. 2304(c) ☐ 41 U.S.C. 253(c) |
|---|---|---|
| 26. ADMINISTERED BY CODE | | 27. PAYMENT WILL BE MADE BY: CODE |

*CONTRACTING OFFICER WILL COMPLETE ITEM 28 OR 29 AS APPLICABLE*

☐ 28. NEGOTIATED AGREEMENT *(Contractor is required to sign this document and return _ _ copies to issuing office.)* Contractor agrees to furnish and deliver all items or perform all work, requisitions identified on this form and any continuation sheets for the consideration stated in this contract. The rights and obligations of the parties to this contract shall be governed by (a) this contract award, (b) the solicitation, and (c) the clauses, representations, certifications, and specifications or incorporated by reference in or attached to this contract.

☐ 29. AWARD *(Contractor is not required to sign this document.)* Your offer on this solicitation, is hereby accepted as to the items listed. This award consummates the contract, which consists of (a) the Government solicitation and your offer, and (b) this contract award. No further contractual document is necessary.

| 30A. NAME AND TITLE OF CONTRACTOR OR PERSON AUTHORIZED TO SIGN *(Type or print)* | | 31A. NAME OF CONTRACTING OFFICER *(Type or print)*<br>TEL: EMAIL: |
|---|---|---|
| 30B. SIGNATURE | 30C. DATE | 31B. UNITED STATES OF AMERICA<br>BY |
| | | 31C. AWARD DATE |

Section 00010 - Solicitation Contract Form

| ITEM NO | SUPPLIES/SERVICES | QUANTITY | UNIT | UNIT PRICE | AMOUNT |
|---|---|---|---|---|---|
| 0001 | | 1 | Lump Sum | | |
| | Site Adapt Construction<br>FFP<br>ANP UP District HQs – 1 Story Lashkar Gar, Helmand Province<br><br>FOB: Destination<br>MILSTRIP: W26WKS90295313<br>PURCHASE REQUEST NUMBER: W26WKS90295313 | | | | |
| | | | | NET AMT | |

| ITEM NO | SUPPLIES/SERVICES | QUANTITY | UNIT | UNIT PRICE | AMOUNT |
|---|---|---|---|---|---|
| 0002 | | 1 | Lump Sum | | |
| | DBA Insurance<br>FFP<br><br>FOB: Destination<br>MILSTRIP: W26WKS90295313 | | | | |
| | | | | NET AMT | |

Section 00100 - Bidding Schedule/Instructions to Bidders

CLAUSES INCORPORATED BY FULL TEXT

52.236-28 PREPARATION OF PROPOSALS--CONSTRUCTION (OCT 1997)

(a) Proposals must be (1) submitted on the forms furnished by the Government or on copies of those forms, and (2) manually signed. The person signing a proposal must initial each erasure or change appearing on any proposal form.

(b) The proposal form may require offerors to submit proposed prices for one or more items on various bases, including--

(1) Lump sum price;

(2) Alternate prices;

(3) Units of construction; or

(4) Any combination of paragraphs (b)(1) through (b)(3) of this provision.

(c) If the solicitation requires submission of a proposal on all items, failure to do so may result in the proposal being rejected without further consideration. If a proposal on all items is not required, offerors should insert the words “no proposal” in the space provided for any item on which no price is submitted.

(d) Alternate proposals will not be considered unless this solicitation authorizes their submission.

(End of provision)

CLAUSES INCORPORATED BY FULL TEXT

52.215-1 INSTRUCTIONS TO OFFERORS--COMPETITIVE ACQUISITION (JAN 2004)

(a) Definitions. As used in this provision--

“Discussions” are negotiations that occur after establishment of the competitive range that may, at the Contracting Officer's discretion, result in the offeror being allowed to revise its proposal.

“In writing or written” means any worded or numbered expression which can be read, reproduced, and later communicated, and includes electronically transmitted and stored information.

“Proposal modification” is a change made to a proposal before the solicitation's closing date and time, or made in response to an amendment, or made to correct a mistake at any time before award.

“Proposal revision” is a change to a proposal made after the solicitation closing date, at the request of or as allowed by a Contracting Officer as the result of negotiations.

“Time”, if stated as a number of days, is calculated using calendar days, unless otherwise specified, and will include Saturdays, Sundays, and legal holidays. However, if the last day falls on a Saturday, Sunday, or legal holiday, then the period shall include the next working day.

(b) Amendments to solicitations. If this solicitation is amended, all terms and conditions that are not amended

remain unchanged. Offerors shall acknowledge receipt of any amendment to this solicitation by the date and time specified in the amendment(s).

(c) Submission, modification, revision, and withdrawal of proposals. (1) Unless other methods (e.g., electronic commerce or facsimile) are permitted in the solicitation, proposals and modifications to proposals shall be submitted in paper media in sealed envelopes or packages (i) addressed to the office specified in the solicitation, and (ii) showing the time and date specified for receipt, the solicitation number, and the name and address of the offeror. Offerors using commercial carriers should ensure that the proposal is marked on the outermost wrapper with the information in paragraphs (c)(1)(i) and (c)(1)(ii) of this provision.

(2) The first page of the proposal must show--

(i) The solicitation number;

(ii) The name, address, and telephone and facsimile numbers of the offeror (and electronic address if available);

(iii) A statement specifying the extent of agreement with all terms, conditions, and provisions included in the solicitation and agreement to furnish any or all items upon which prices are offered at the price set opposite each item;

(iv) Names, titles, and telephone and facsimile numbers (and electronic addresses if available) of persons authorized to negotiate on the offeror's behalf with the Government in connection with this solicitation; and

(v) Name, title, and signature of person authorized to sign the proposal. Proposals signed by an agent shall be accompanied by evidence of that agent's authority, unless that evidence has been previously furnished to the issuing office.

(3) Submission, modification, or revision, of proposals.

(i) Offerors are responsible for submitting proposals, and any modifications, or revisions, so as to reach the Government office designated in the solicitation by the time specified in the solicitation. If no time is specified in the solicitation, the time for receipt is 4:30 p.m., local time, for the designated Government office on the date that proposal or revision is due.

(ii)(A) Any proposal, modification, or revision received at the Government office designated in the solicitation after the exact time specified for receipt of offers is “late” and will not be considered unless it is received before award is made, the Contracting Officer determines that accepting the late offer would not unduly delay the acquisition; and--

(1) If it was transmitted through an electronic commerce method authorized by the solicitation, it was received at the initial point of entry to the Government infrastructure not later than 5:00 p.m. one working day prior to the date specified for receipt of proposals; or

(2) There is acceptable evidence to establish that it was received at the Government installation designated for receipt of offers and was under the Government's control prior to the time set for receipt of offers; or

(3) It is the only proposal received.

(B) However, a late modification of an otherwise successful proposal that makes its terms more favorable to the Government, will be considered at any time it is received and may be accepted.

(iii) Acceptable evidence to establish the time of receipt at the Government installation includes the time/date stamp of that installation on the proposal wrapper, other documentary evidence of receipt maintained by the installation, or oral testimony or statements of Government personnel.

(iv) If an emergency or unanticipated event interrupts normal Government processes so that proposals cannot be received at the office designated for receipt of proposals by the exact time specified in the solicitation, and urgent Government requirements preclude amendment of the solicitation, the time specified for receipt of proposals will be deemed to be extended to the same time of day specified in the solicitation on the first work day on which normal Government processes resume.

(v) Proposals may be withdrawn by written notice received at any time before award. Oral proposals in response to oral solicitations may be withdrawn orally. If the solicitation authorizes facsimile proposals, proposals may be withdrawn via facsimile received at any time before award, subject to the conditions specified in the provision at 52.215-5, Facsimile Proposals. Proposals may be withdrawn in person by an offeror or an authorized representative, if the identity of the person requesting withdrawal is established and the person signs a receipt for the proposal before award.

(4) Unless otherwise specified in the solicitation, the offeror may propose to provide any item or combination of items.

(5) Offerors shall submit proposals in response to this solicitation in English, unless otherwise permitted by the solicitation, and in U.S. dollars, unless the provision at FAR 52.225-17, Evaluation of Foreign Currency Offers, is included in the solicitation.

(6) Offerors may submit modifications to their proposals at any time before the solicitation closing date and time, and may submit modifications in response to an amendment, or to correct a mistake at any time before award.

(7) Offerors may submit revised proposals only if requested or allowed by the Contracting Officer.

(8) Proposals may be withdrawn at any time before award. Withdrawals are effective upon receipt of notice by the Contracting Officer.

(d) Offer expiration date. Proposals in response to this solicitation will be valid for the number of days specified on the solicitation cover sheet (unless a different period is proposed by the offeror).

(e) Restriction on disclosure and use of data. Offerors that include in their proposals data that they do not want disclosed to the public for any purpose, or used by the Government except for evaluation purposes, shall--

(1) Mark the title page with the following legend: This proposal includes data that shall not be disclosed outside the Government and shall not be duplicated, used, or disclosed--in whole or in part--for any purpose other than to evaluate this proposal. If, however, a contract is awarded to this offeror as a result of--or in connection with-- the submission of this data, the Government shall have the right to duplicate, use, or disclose the data to the extent provided in the resulting contract. This restriction does not limit the Government's right to use information contained in this data if it is obtained from another source without restriction. The data subject to this restriction are contained in sheets [insert numbers or other identification of sheets]; and

(2) Mark each sheet of data it wishes to restrict with the following legend: Use or disclosure of data contained on this sheet is subject to the restriction on the title page of this proposal.

(f) Contract award. (1) The Government intends to award a contract or contracts resulting from this solicitation to the responsible offeror(s) whose proposal(s) represents the best value after evaluation in accordance with the factors and subfactors in the solicitation.

(2) The Government may reject any or all proposals if such action is in the Government's interest.

(3) The Government may waive informalities and minor irregularities in proposals received.

(4) The Government intends to evaluate proposals and award a contract without discussions with offerors (except clarifications as described in FAR 15.306(a)). Therefore, the offeror's initial proposal should contain the offeror's best terms from a cost or price and technical standpoint. The Government reserves the right to conduct discussions

if the Contracting Officer later determines them to be necessary. If the Contracting Officer determines that the number of proposals that would otherwise be in the competitive range exceeds the number at which an efficient competition can be conducted, the Contracting Officer may limit the number of proposals in the competitive range to the greatest number that will permit an efficient competition among the most highly rated proposals.

(5) The Government reserves the right to make an award on any item for a quantity less than the quantity offered, at the unit cost or prices offered, unless the offeror specifies otherwise in the proposal.

(6) The Government reserves the right to make multiple awards if, after considering the additional administrative costs, it is in the Government's best interest to do so.

(7) Exchanges with offerors after receipt of a proposal do not constitute a rejection or counteroffer by the Government.

(8) The Government may determine that a proposal is unacceptable if the prices proposed are materially unbalanced between line items or subline items. Unbalanced pricing exists when, despite an acceptable total evaluated price, the price of one or more contract line items is significantly overstated or understated as indicated by the application of cost or price analysis techniques. A proposal may be rejected if the Contracting Officer determines that the lack of balance poses an unacceptable risk to the Government.

(9) If a cost realism analysis is performed, cost realism may be considered by the source selection authority in evaluating performance or schedule risk.

(10) A written award or acceptance of proposal mailed or otherwise furnished to the successful offeror within the time specified in the proposal shall result in a binding contract without further action by either party.

(11) If a post-award debriefing is given to requesting offerors, the Government shall disclose the following information, if applicable:

(i) The agency's evaluation of the significant weak or deficient factors in the debriefed offeror's offer.

(ii) The overall evaluated cost or price and technical rating of the successful and the debriefed offeror and past performance information on the debriefed offeror.

(iii) The overall ranking of all offerors, when any ranking was developed by the agency during source selection.

(iv) A summary of the rationale for award.

(v) For acquisitions of commercial items, the make and model of the item to be delivered by the successful offeror.

(vi) Reasonable responses to relevant questions posed by the debriefed offeror as to whether source-selection procedures set forth in the solicitation, applicable regulations, and other applicable authorities were followed by the agency.

(End of provision)

CLAUSES INCORPORATED BY FULL TEXT

52.216-1 TYPE OF CONTRACT (APR 1984)

The Government contemplates award of a firm fixed price contract resulting from this solicitation.

(End of provision)

CLAUSES INCORPORATED BY FULL TEXT

52.233-2 SERVICE OF PROTEST (SEP 2006)

(a) Protests, as defined in section 33.101 of the Federal Acquisition Regulation, that are filed directly with an agency, and copies of any protests that are filed with the Government Accountability Office (GAO), shall be served on the Contracting Officer (addressed as follows) by obtaining written and dated acknowledgment of receipt from

By Mail:

DEPARTMENT OF THE ARMY
AFGHANISTAN ENGINEER DISTRICT
US ARMY CORPS OF ENGINEERS
ATTN: CEAED-CT (CONTRACING OFFICER)
KABUL, AFGHANISTAN
APO, AE 09356

By Courier / Hand Delivery:

CONTRACTING OFFICER
US ARMY CORPS OF ENGINEERS
HOUSE 1, STREET 1, WEST WAZIR AKBAR KHAN
(BEHIND AMAN HIGH SCHOOL)
KABUL AFGHANISTAN

(b) The copy of any protest shall be received in the office designated above within one day of filing a protest with the GAO.

(End of provision)

CLAUSES INCORPORATED BY FULL TEXT

52.236-27 SITE VISIT (CONSTRUCTION) (FEB 1995)

(a) The clauses at 52.236-2, Differing Site Conditions, and 52.236-3, Site Investigations and Conditions Affecting the Work, will be included in any contract awarded as a result of this solicitation. Accordingly, offerors or quoters are urged and expected to inspect the site where the work will be performed.

(b) Site visits may be arranged during normal duty hours by contacting:
Name: Mr. Anton Klein
Cellular Telephone: 070-761-4918
Telephone: 540-678-4671

(End of provision)

CLAUSES INCORPORATED BY FULL TEXT

52.252-1 SOLICITATION PROVISIONS INCORPORATED BY REFERENCE (FEB 1998)

This solicitation incorporates one or more solicitation provisions by reference, with the same force and effect as if they were given in full text. Upon request, the Contracting Officer will make their full text available. The offeror is cautioned that the listed provisions may include blocks that must be completed by the offeror and submitted with its quotation or offer. In lieu of submitting the full text of those provisions, the offeror may identify the provision by paragraph identifier and provide the appropriate information with its quotation or offer. Also, the full text of a solicitation provision may be accessed electronically at this/these address(es):

FAR: http://acquisition.gov/far/index.html

DFARS: http://farsite.hill.af.mil/VFDFAR1.HTM

AFARS: http://farsite.hill.af.mil/VFAFAR1.HTM

EFARS: http://www.usace.army.mil/CECT/Pages/EFARS.aspx

(End of provision)

SECTION 00110

# SECTION 00110 PROPOSAL PREPARATION

**ANP SITE-ADAPT DESIGN-BUILD**

**LOW-PRICED, TECHNICALLY ACCEPTABLE**

## 1. INQUIRIES

Perspective offerors should submit inquiries related to this solicitation by writing or calling the following (collect calls will not be accepted):

All questions will be submitted in writing by letter or e-mail to:

U.S. Army Corps of Engineers (USACE)

Afghanistan Engineer District (AED)

Qalaa House, Attention:

Kabul, Afghanistan

E-MAIL ADDRESS: paul.c.daugherty@usace.army.mill

Please include the solicitation number, and project title with your questions. Written inquiries must be received by this office not later than 4 calendar days prior to the date set for receipt of offers.

Oral explanations or instructions are not binding. Any information given to an offeror which impacts the solicitation and/or offer will be given in the form of a written amendment to the solicitation.

As this is a competitive negotiation acquisition, there is no public bid opening and no information will be given out as to the number of offerors or the results of the competition until all awards are made.

**2. DIRECTIONS FOR SUBMITTING PROPOSALS**

Offers must be in sealed envelopes/packages, marked and addressed as follows:

MARK PACKAGES:

Solicitation No. W917PM-09-R-0116

Offer Closing Date: 17 Sept 2009

Offer Closing Time: 5:00 p.m. (LOCAL KABUL TIME)

ADDRESS PACKAGES TO:

U.S. Army Corps of Engineers (USACE)

Afghanistan Engineer District (AED)

Qalaa House, Attention:

Kabul, Afghanistan

Special Instruction Pertaining to Hand Carried Offers: Hand-carried offers must be delivered to the USACE AED offices, Qalaa House, Kabul, Afghanistan.

**3. PREPROPOSAL CONFERENCE / SITE VISIT**

No organized Pre-Proposal Conferences/Site-Visit is set for this acquisition at this time. If an organized Pre-Proposal Conference/Site-Visit is scheduled, it will be announced by Solicitation Amendment. Offerors may contact the local representative to arrange a site visit individually. See FAR Provision 52.236-27 Site Visit (Construction)

***IMPORTANT NOTES***. (1) Remarks and explanations addressed during the conference or site visit shall not qualify or alter the terms and conditions of the solicitation. (2) The terms and conditions of the solicitation remain unchanged unless the solicitation is formally amended in writing.

**4. TELEGRAPHIC OFFERS - - TELEGRAPHIC OFFERS ARE NOT ACCEPTABLE**.

However, offers may be withdrawn by written or telegraphic notice. Any telegram to withdraw an offer sent to this office must be received in the office designated in the Request for Proposal (RFP) for receipt of offers not later than the exact date and time set for receipt of proposals. A telegraphic withdrawal of an offer received in such office by telephone from the receiving telegraph office not later than the exact date and time set for receipt of proposals shall be considered. However, the telephone message shall be confirmed by the telegraph company by sending a copy of the written telegram that formed the basis for the telephone call. The written telegram shall be sealed in an envelope by a proper official and sent to the office designated in the RFP for receipt of offers. The official shall write on the envelope (1) the date and time of receipt and by whom, and (2) the number of the RFP, and shall sign the envelope. The offeror is responsible to inform the telegraph company of these requirements. No one from this office will be dispatched to the local telegraph office to pick up any telegram for any reason.

**5. FACSIMILE OFFERS**

Facsimile offers, modifications thereto, or cancellations of offers will not be accepted.

Facsimile and email responses to acknowledge Solicitation Amendments are not allowed. Only hard copy acknowledgements of amendments are permitted.

**6. PROPOSAL SUBMISSION REQUIREMENTS AND INSTRUCTIONS**

a. REQUIREMENT FOR SEPARATE PRICE AND TECHNICAL PROPOSALS.

(1) Each Offeror must submit both a Price Proposal and a Technical Proposal. The Price Proposal and the Technical Proposal must be submitted as separate volumes. Ensure that the outside of each separate volume is clearly marked to indicate its contents; and the identity of the offeror. Additionally, clearly identify the “original” cost/price proposal and the “original” technical proposal on the outside cover.

(2) Both the Price Proposal and the Technical Proposal must be received by the closing date and time set for receipt of proposals.

(3) No dollar amounts from the Price Proposal are to be included in the Technical Proposal.

(4) All information intended to be evaluated as part of the Technical Proposal must be submitted as part of the Technical Proposal. Do not cross-reference similar material in the Price Proposal, or vice versa. Also, do not include links to websites in lieu of incorporating information into your proposal.

(5) Do not include exceptions to the terms and conditions of the solicitation in either the technical or price proposal. Should the offer include any standard company terms and conditions that conflict with the terms and conditions of the solicitation, the offer may be determined "unacceptable" and thus ineligible for award. Should the offeror have any questions related to specific terms and conditions, these should be resolved prior to submission of the offer. Notwithstanding the above, the Offeror must clearly describe in the Proposal Cover Sheet submitted with the Price Proposal any exceptions to the contractual and/or technical terms and conditions of the solicitation contained in the Offer.

b. DISCUSSIONS. The Government intends to evaluate proposals and award a contract without discussions with offerors (except clarifications as described in FAR 15.306(a)). Therefore, the offeror’s initial proposal should contain the offeror’s best terms from a cost or price and technical standpoint. The Government reserves the right to conduct discussions if the Contracting Officer later determines them to be necessary. If the Contracting Officer determines that the number of proposals that would otherwise be in the competitive range exceeds the number at which an efficient competition can be conducted, the Contracting Officer may limit the number of proposals in the competitive range to the greatest number that will permit an efficient competition among the most highly rated proposals, in accordance with FAR 52.215-1, Instructions to Offerors—Competitive Acquisitions.

c. COST OR PRICING DATA. Offerors are not required to submit Cost or Pricing Data with their offers.

d. GENERAL INSTRUCTIONS.

(1) Submit only the hard-copy paper documents and the electronic files specifically authorized and/or required elsewhere in this section. Do not submit excess information, to include audio-visual materials, electronic media, etc.

(2) Use only 8 ½ by 11 inch paper for hard copy submissions, unless another paper size is specifically authorized elsewhere in this section for a particular submission. Do not use fold-outs (e.g., 11” x 14” or 11” x 17” sheets) unless specifically authorized in this section for a particular submission. Do not use a font size smaller than 10, an unusual font style such as script, or condensed print for any submission. All page margins must be at least 1 inch wide, but may include headers and footers.

(3) The preferred method for assembling your proposals is to use three-ring binders; however, the use of pressboard or other report covers with compression or other type fasteners is acceptable. Do not use spring clamps or exceed the recommended capacity of the fastener or binder. Do not use plastic multi-hole/spiral binding systems, heat binding systems, or other systems which do not facilitate the ready insertion of additional pages.

(4) "Confidential" projects cannot be submitted to demonstrate capability unless all of the information required for evaluation as specified herein can be provided to the Government as part of the Offeror's technical proposal. Offerors that include in their proposals information that they do not want disclosed to the public for any purpose, or used by the Government except for evaluation purposes, must be clearly marked in accordance with the instructions at FAR 52.215-1, "Instructions to Offerors—Competitive Acquisition", paragraph (e), "Restriction on disclosure and use of data".

(5) In the case of an Offeror that is part of a large, multi-segmented business concern, provide information directly pertaining to the specific segment of the business concern (i.e., the division, group, unit, etc.) that will perform work under the prospective contract.

(6) For submissions with page limitations, the pages will be counted as follows: One side of the paper is one page; information on both the back and front of one sheet of paper will be counted as two pages. Where authorized, fold-out pages (11" x 14" or 11" x 17") will count as one page. Pages furnished for organizational purposes only, such as a "Table of Contents" or divider tabs, are not included in the page limitation.

e. SPECIFIC INSTRUCTIONS FOR THE PRICE PROPOSAL

(1) Number of Sets of the Price Proposal. Submit the ORIGINAL and ONE additional hard copy sets of the Price Proposal.

(2) Size Restrictions and Page Limits. Use only 8 ½" x 11" pages. There are no page limits set for the price proposal. However, limit your response to information required by this solicitation. Excess information will not be considered in the Government's evaluation.

(3) Format and Contents of the Price Proposal and List of Tabs. The Price Proposal shall be appropriately labeled as such and shall be organized as indicated in the following chart.

| **TAB** | **CONTENTS OF THE PRICE PROPOSAL** |
|---|---|
| **#1** | The Proposal Cover Sheet |
| **#2** | The SF 1442 and Acknowledgement of Amendments |
| **#3** | Section 00010, Pricing Schedule |

| | |
|---|---|
| **#4** | Representations, Certifications, and Other Statements of Offerors |
| **#5** | JV Agreement, if applicable. |

(4) Detailed Submission Instructions for the Price Proposal

**TAB 1:** The proposal cover sheet is required by FAR 52.215-1(2) (c) (i)-(v) and must be submitted by all offerors. This provision, titled "Instructions to Offerors—Competitive Acquisition, Alternate I" and the format for the proposal cover sheet are furnished elsewhere in this section.

**TAB 2:** The SF 1442, Solicitation, Offer, and Award is to be completed by all Offerors and duly executed with an original signature by an official authorized to bind the company in accordance with FAR 4.102. Any and all amendments must be acknowledged by all Offerors in accordance with the instructions on the Standard Form 30, Amendment of Solicitation.

**TAB 3:** Section 00010 is to be completed in its entirety by all Offerors. See Sections 00010 with attached notes, for further instructions.

**TAB 4:** All Offerors must have electronically completed the annual representations and certifications on the "Online Representations and Certifications Application" (ORCA) website or respond with the completed representations / certifications found in the solicitation. The offerors are responsible for ensuring that these on-line Representations and Certifications are updated as necessary to reflect changes, but at least annually to ensure that they are kept current, accurate and complete. Additionally, the offeror must also complete and return the "Representations, Certifications, and Other Statements of Offerors" included in the solicitation. If the offeror is a Joint Venture, all participants must separately complete both the ORCA Representations and Certifications.

**TAB 5:** If the Offeror is a Joint Venture (JV), include a copy of the JV Agreement. If a JV Agreement has not yet been finalized/approved, indicate its status. JV Agreements must clearly indicate the percentages of the JV participants, in particular the percent of the controlling party, and a clear delineation of responsibilities and authorities between the JV parties.

f. SPECIFIC INSTRUCTIONS FOR THE TECHNICAL PROPOSAL

(1) Number of Sets of the Technical Proposal. Submit the ORIGINAL and ONE (1) additional sets of the written Technical Proposal, with each set separately packaged.

(2) Format and Contents of the Technical Proposal and List of Tabs. The original and all copies of the technical proposal will be appropriately labeled as such. Each set shall be organized using the tabs specified in the following chart. Note: The main tabs directly correlate to the evaluation factors identified in Section 00120.

| **TAB** | **CONTENTS OF THE TECHNICAL PROPOSAL** |
|---|---|

| | |
|---|---|
| Factor #1 | EXPERIENCE |
| Factor #2 | PERSONNEL |
| Factor #3 | PAST PERFORMANCE |

(3) Page Limitations. See paragraphs 6.d.(2) and 6.d.(6) above for format and page count instructions. The following page limitations are established for each factor described above:

- Factor #1, Experience – Limited to 5 pages (maximum of 5 forms)
- Factor #2, Personnel – Limited to 1 page for each resume provided
- Factor #3, Past Performance – No page limitation

Pages submitted which exceed limitations listed above will not be evaluated. Tables of content, proposal cover letters, and tabs between proposal information do not count toward any page limitations in the proposal.

(4) Detailed Submission Requirements for the Technical Proposal. The following is a detailed description of the information to be submitted under each TAB.

(i) **TAB 1: FACTOR 1, EXPERIENCE:** Demonstrate the experience of the offeror and/or the proposed team, including sub-contractors, on projects that are the same or similar to that described in the solicitation for site-adapt, design-build construction work.

The Contractor shall complete a minimum of two (2), but no more than five (5), "Experience Information" forms, attached at the end of this section, in response to this factor. All blocks must be filled in and all data should be accurate, current, and complete. All projects submitted must have been underway or completed within the last 3 years. At least one (1) of the projects provided must be valued at over $500,000.00 and one (1) of the projects must have been successfully completed in the Province in which the solicitation project is to be located.

If any of the information required by the Experience Information Form is not included in the form then the contractor may be considered non-responsive and evaluated as unacceptable.

(ii) **TAB 2: FACTOR 2, PERSONNEL**: The offeror must provide resume data for the following key personnel: Project Manager – Safety Officer, Quality Control Manager,, Senior Electrical Engineer, Senior Mechanical Engineer, Senior Civil Engineer, and Construction Superintendent.

Resumes must include the following information and not exceed one page (1), except resumes for Safety Officer, Quality Control Manager and Construction Superintendent do not require degrees.

- Name and title
- Project assignment
- Name of firm with which associated

- Years experience with this firm and with other firms
- Education degree(s), year, specialization, if applicable
- Active professional registration, year first registered, if applicable
- Other experience and qualifications relevant to same/similar work required under this contract

The following key personnel, Project Manager, Senior Electrical Engineer, Senior Mechanical Engineer and Senior Civil Engineer, should have a degree in the field of work governed by the position they are assigned to.

All key personnel should have a minimum of three (3) years of professional experience in that field. For example, a Civil Engineer must have a degree in Civil Engineering and 3 years of professional civil engineering experience.

(iii) **TAB 3: FACTOR 3, PAST PERFORMANCE:** For the projects listed under Factor 1 – Experience, provide references, letters of recommendations, commendations and/or awards. The Contractor Performance Assessment Reporting System (to include ACASS, CCASS, and CPARS) will be utilized to validate past performance ratings on Department of Defense contracts, as well as any other past performance information the Government deems necessary to evaluate a contractor's past performance.

The Government may contact references provided as part of Factor 1 – Experience for information regarding the offeror's past performance on the project and for the purposes of assessing and verifying the scope of the work performed. Offerors should provide accurate, current, and complete contact information for references provided in the project descriptions.

For the purpose of the past performance evaluation, offerors shall be defined as business arrangements and relationships, such as Joint Venture participants, teaming partners, and major subcontractors. The past performance record of each firm in the business arrangement may be evaluated by the Government

In the case of an Offeror without a record of recent, relevant past performance (and for which there is also no recent, relevant past performance information for its predecessor companies of key subcontractors), or for whim information on past performance is not available or cannot be verified, the Offeror will not be evaluated favorably or unfavorably on past performance. This does not preclude the Government from making award to a higher-priced Offeror with a favorable past performance record over a lower-priced Offeror with a favorable past performance record over a lower-priced Offeror with a neutral past performance rating.

**7. Proposal Cover Sheet**

PROPOSAL COVER SHEET

1. Solicitation Number:

2. The name, address, and telephone and facsimile numbers of the Offeror

(and electronic address if available):

3. A statement specifying the extent of agreement with all terms, conditions, and provisions included in the solicitation and agreement to furnish any or all items upon which prices are offered at the price set opposite each item. Statement to include any exceptions in technical or cost/price proposal or exceptions inherent in Offeror's standard terms and conditions.

4. Names, titles, and telephone and facsimile numbers (and electronic addresses if available) of

persons authorized to negotiate on the Offeror's behalf with the Government in connection with this solicitation:

5. Name, title, and signature of person authorized to sign the proposal. Proposals signed by an agent shall be accompanied by evidence of that agent's authority, unless that evidence has been previously furnished to the issuing office.

**8.** SOURCE SELECTION USING THE LOW-PRICED, TECHNICALLY ACCEPTABLE PROCESS. An evaluation for acceptability will be performed on eligible proposals in accordance with FAR 15.101-2(b). The proposal that provides the reasonable and realistic lowest price and is otherwise technically acceptable in all factors will be selected for award. To be considered technically acceptable, no technical factor in the proposal may be determined to be unacceptable. The failure of a proposal to meet any of the factors will result in a technically unacceptable rating and the proposal will be precluded from award. A proposal with a price determined to be unrealistically low or unreasonably high will not be eligible for award. See also Section 00120.

**EXPERIENCE INFORMATION**

**(To be completed by Contractor)**

| | |
|---|---|
| **1. Contractor:**<br><br>**Name:**<br><br>**Address:** | **2. Contract /Task Order(TO) /Purchase Order (PO) Number:** |
| | **3. Contract/TO/PO Dollar Value:** |
| | **4. Contract/TO /PO Status:** ☐ **Active** ☐ **Complete**<br><br>**Completion Date (w/ extensions):** |

**5. Project Title:**

**Location:**

**6. Project Description:**

**7. Project Owner or Project Manager for the Client – provide:**

**Name:**

**Address:**

**Telephone Number and E-mail:**

SECTION 00120

# SECTION 00120 PROPOSAL EVALUATION AND CONTRACT AWARD

**ANP SITE-ADAPT DESIGN-BUILD**

**LOW-PRICED, TECHNICALLY ACCEPTABLE (LPTA)**

1. ELIGIBILITY FOR CONTRACT AWARD. In accordance with the FAR, no contract shall be entered into unless the contracting officer ensures that all requirements of law, executive orders, regulations, and all other applicable procedures, including clearances and approvals, have been met. This includes the FAR requirement that no award shall be made unless the contracting officer makes an affirmative determination of responsibility. To be determined responsible, a prospective contractor must meet the general standards in FAR Part 9 and any special standards set forth in the solicitation.

2. SOURCE SELECTION USING THE LOW-PRICED, TECHNICALLY ACCEPTABLE PROCESS. An evaluation for acceptability will be performed on eligible proposals in accordance with FAR 15.101-2(b). The proposal that provides the reasonable and realistic lowest price and is otherwise technically acceptable in all factors will be selected for award. To be considered technically acceptable, no technical factor in the proposal may be determined to be unacceptable. The failure of a proposal to meet any of the factors will result in a technically unacceptable rating and the proposal will be precluded from award. A proposal with a price determined to be unrealistically low or unreasonably high will not be eligible for award.

3. BASIS OF AWARD. Award of a contract will be made to the responsible offeror who submits the lowest priced, technically acceptable proposal that is both realistically and reasonably priced for the work to be performed. Offers will be evaluated in accordance with the evaluation criteria stipulated in the Request for Proposal (RFP). An offeror may not receive award, even if it has the lowest-priced, technically acceptable proposal, if its price proposal fails to demonstrate that it understands the scope of work required by the solicitation.

4. EVALUATION OF THE PRICE PROPOSALS

a. Price will be evaluated and considered but will not be scored or combined with other aspects of the proposal evaluation. The proposed prices will be analyzed for reasonableness. They may also be analyzed to determine whether they are realistic for the work to be performed, reflect a clear understanding of the requirements, and are consistent with the information provided by the Offeror. Additionally, all offers will be analyzed for unbalanced pricing. The price analysis will be conducted on offeror prices using techniques pursuant to FAR 15.404-1(b) and in accordance with the solicitation. As part of the price analysis, the Government will perform a realism analysis for the purpose of measuring each offeror's understanding of the requirements and to assess the risk inherent in an offeror's proposal. Price proposals determined to be unrealistically low or unreasonably high for the work to be performed will be considered to indicate a lack of understanding of the requirement and to present an unacceptable performance risk. Proposals with total prices that fail the price analysis will not be considered further because they are ineligible for award under the criteria of the solicitation as either unrealistically low or as unreasonable high.

b. The otherwise technically-acceptable, lowest-priced offeror may be required to confirm its price on either a CLIN, element, or total price basis, and/or provide additional information in support of their price, prior to contract award at the Government's request and discretion. An offeror may not receive award, even if it has the lowest-

priced, technically acceptable proposal, if its price proposal fails to demonstrate that it understands the scope of work required by the solicitation.

5. EVALUATION OF THE TECHNICAL PROPOSAL. The Technical Proposal will be evaluated based on the following evaluation criteria:

a. **FACTOR 1: EXPERIENCE:** The Government will review the project experience of the offeror, including subcontractors, on projects provided in response to Section 00110, Factor 1. Offerors must meet all of the following standards to receive a "GO" or acceptable rating on this factor:

- Offeror must have at least two (2) projects but no more than five (5) that are the same or similar to that of the site-adapt, design-build construction work found in this solicitation; AND
- At least one (1) of the projects submitted must be valued at over $500,000.00 AND
- All projects must have been completed, or underway, within the last 3 years AND
- At least (1) of the projects submitted must have been completed in the Province in which the solicitation project is to be located.

Failure meet all of the standards under this factor may result in a "NO GO" or unacceptable rating and possible elimination from further consideration for contract award.

b. **FACTOR 2: PERSONNEL:** The Government will review the resumes provided in response to Section 00110, Factor 2. Offerors must meet all of the following standards to receive a "GO" or acceptable rating on this factor.

The offeror must submit resumes for the following key personnel: Project Manager, Safety Officer, Quality Control Manager, Senior Civil Engineer, Senior Electrical Engineer, Senior Mechanical Engineer and Construction Superintendent. Resumes must include the following information and not exceed one page, except resumes for Safety Officer, Quality Control Manager and Construction Superintendent do not require degrees.

- a degree in the field of work governed by the position they are assigned to; AND
- a minimum of three (3) years of professional experience in that field; AND
- experience in site-adapt design-build construction contracts working in the position they are assigned to under this contract.

Failure to meet the standards under this factor may result in a "NO GO" or unacceptable rating and possible elimination from further consideration for contract award.

c. **FACTOR 3: PAST PERFORMANCE:** The Government will review the letters of reference submitted by the offeror in response to Section 00110, Factor 1, and may contact points of contact listed on the "Experience Information" forms submitted under Factor 1. Offerors must meet the following standards to receive a "GO" or acceptable rating on this factor:

- All past or current references must recommend either hiring or using the offeror again for future work and/or reflects positive performance of the work requirements.

**Failure to meet the standards under this factor may result in a "NO GO" or unacceptable rating and possible elimination from further consideration for contract award. Offerors with no past performance information will receive a "NEUTRAL" rating for this factor.**

In the case of an Offeror without a record of recent, relevant past performance (and for which there is also no recent, relevant past performance information for its predecessor companies of key subcontractors), or for

whim information on past performance is not available or cannot be verified, the Offeror will not be evaluated favorably or unfavorably on past performance. This does not preclude the Government from making award to a higher-priced Offeror with a favorable past performance record over a lower-priced Offeror with a favorable past performance record over a lower-priced Offeror with a neutral past performance rating.

6. GENERAL TECHNICAL CRITERIA

a. Material omission(s) may cause the technical proposal to be rejected as unacceptable.

b. Technical proposals which do not provide the specified information in the specified location in accordance with the submission instructions may be downgraded. The Government is under no obligation to search for information that is not in the specified location.

c. Proposals which are generic, vague, or lacking in detail may be considered unacceptable. The offeror's failure to include information that the Government has indicated should be included may result in the proposal being found deficient if inadequate detail is provided.

d. The Government cannot make award based on a deficient offer. Therefore, receipt of a "NO GO" determination of acceptability for any factor will make the offer ineligible for award, unless the Government elects to enter into discussions with that Offeror and all deficiencies are remedied in a revised proposal.

# SECTION 00150

## THE DESIGN/BUILD PROCESS

PART 1 - GENERAL

1. DESIGN/BUILD (DB) PROCESS

The facility shall be designed and built by a single DB contractor. The DB contractor may be a single firm or a team of firms that includes registered Architects and Engineers either employed by or subcontracted to the DB contractor. Licensing jurisdiction of Architects and Engineers of record shall be shall be verifiable. The DB contractor shall be the Architect/Engineer-of-Record, whether the DB contractor utilizes services of licensed architects and engineers employed by its firm or subcontracts with independent architectural and/or engineering firm(s). The DB contractor shall be solely liable for design errors and/or omissions and should be insured as the A-E firm against design errors and omissions.

Section 00555, DESIGN CONCEPT DOCUMENTS identifies project documents furnished herewith to be used as the basis for the project design and construction documents. The successful Offeror shall be required to complete the design and construction documentation, and construct the project in compliance with these completed requirements.

2. OUTLINE DESCRIPTION OF THE DB PHASE

No work can begin on any phase of the process until an authorization Clearance for construction for that phase is issued.

2.1 PROPOSAL PHASE

The Proposal Phase includes the period from the time from the issuance of the Request for Proposals (RFP) through the selection process and the final award of the DB contract.

The proposals to be submitted include a Management/Technical Proposal and a Cost/Price Proposal. The contents and organization of the proposal is described in SECTION 00110 - PROPOSAL PREPARATION. The Government will evaluate and award the DB contract to a single Offeror based upon the criteria which are outlined in SECTION 00120 - PROPOSAL EVALUATION AND CONTRACT AWARD.

2.2 DESIGN PHASE

The successful DB Contractor shall develop and submit for formal review two submittals and the final design. The DB Contractor is encouraged to develop and submit multiple cost saving proposals for innovative design alternatives.

2.2.1 The Design Phase will consist of three parts as follows:

a. A Pre-design meeting will be conducted to distribute drawings to the DB Contractor, finalize and clarify technical information, and clarify other necessary information.

b. Part 1 will be the basic services required to develop the first submittal which represents: 65% complete drawings and specifications for site preparation work, utility construction, paving, foundation, and structural diaphragm of all. Part I also includes incorporating the revisions identified

in the First submittal review.

After approval of the Part 1 drawings and specification submittal, the Government may issue a Clearance for Construction letter to commence with the Build Phase for all site and off-site utilities, clearing, grubbing, rough grading the site, demolition work, parking lot base course, foundation, and structural framing.

c. Part 2 shall include all design services required to complete the second design submittal: 100% complete drawings and specifications for site preparation work, utility construction, paving, foundation, and structural diaphragm of all work. Part 2 design shall not begin until an approval of the Part 1 submittal is issued. The Contractor shall submit a cost loaded schedule at this time for review and approval.

3. BUILD PHASE

The Build Phase will be initiated by an authorization letter.

The authorization letter will be provided separately by the Contracting Officer for each phase of the work. The Government may give the DB Contractor authorization for the Build Phase for portions of the work following review and approval of the First Design Submittal.

Weekly coordination meetings will be held at which, as a minimum, the DB Contractor's Project Manager, a representative of the Designer, the site Superintendent, and the Contractor's Quality Control Manager shall be present.

4. PROJECT SCHEDULE:

The following is an internal design schedule and is subject to modification by the Offeror to suit their particular method of operation. Overall time constraints are required and cannot be changed except by contract modification. Prospective offerors shall be required to submit a complete schedule for design and construction that meets or exceeds the overall time goals of the Government for this project.

| | |
|---|---|
| Notice to Proceed | following Award of Contract (upon written notification) |
| Design Phase - Basic Services Pre-design Meeting | within 7 days from Award of Contract |
| Design Submittal Due | within 30 days following Award of Contract |
| Submittal Review Conference ***(location TBD)*** | within 7 days following submittal review |
| Incorporate Changes to Submittal (Re-Submit for Review and Approval 100% design submittal) | within 7 days following review conference |
| Build Phase Authorization for Remainder of Work | Upon approval of design submittal |
| Total Design and Construction Period | **353** days (performance period includes design and construction phases) |

4. LIQUIDATED DAMAGES:

Liquidated damages in the amount of **$1,950.00** every calendar day of delay shall be assessed and charged to the Contractor.

***All days are in calendar days.***

PART 2 - PRODUCTS (NOT APPLICABLE)

PART 3 - EXECUTION (NOT APPLICABLE)

--END OF SECTION--

SECTION 00555

**SECTION 00555**

**DESIGN CONCEPT DOCUMENTS**

**PART 1 GENERAL**

**1.1 GENREAL**

This section identifies documents issued with this RFP which establish the concept or basis for the project design. These requirements are minimum standards and may be exceeded by the Offeror. Deviations from these concepts and standards may be approved if considered by the Government to be in its best interests.

The extent of development of these requirements in no way relieves the successful Offeror from the responsibility of completing the design, construction documentation, and construction of the facility in conformance with applicable criteria and codes.

**1.2 ENGINEERING AND DESIGN CRITERIA**

General design requirements are set forth in this RFP herein. The Specifications Divisions 02 thru 16 is the primary specifications criteria for the design and construction of the project. No design criteria will be furnished by the Afghanistan Engineer District except that which may be required for design and is not available from commercial sources or from the Construction Criteria Base (CCB) or 'Techinfo' website located at http://www.wbdg.org/ccb/ . The references within CCB must be obtained by the A/E if the criteria are required or desired. All design, unless otherwise specified, shall be based on nationally recognized industry standard, criteria, and practice.

**1.3 APPENDIX DOCUMENTS**

See Appendices for further technical requirements, criteria, and parameters that are a part of this contract.

**1.4 SPECIFICATIONS**

Specifications included herein shall be utilized as design criteria and minimum standards for the corresponding construction work. The successful Offeror shall develop complete construction specifications using the criteria included in these specifications.

The Government will provide Division 1 specifications sections as required, to the successful Offeror; and these sections shall be included in the final construction specifications without change. The Design Build Contractor shall furnish these specifications on electronic media for the production of construction specifications when requested. These specifications shall be submitted together with other required contractor prepared project construction documents during the Second Design Submittal of the Design Phase, Part II.

**1.5 ORDER OF PRECEDENCE**

In case of conflict, duplication, or overlap of design criteria specified in the documents referenced in this section, the following order of precedence shall be followed:

1. Contract Award Document and referenced publications therein.
2. Written requirements supersede drawings.

**1.6 MANDATORY CRITERIA**

Portions of the design criteria documents provide mandatory criteria. Mandatory criteria consists of drawings, schematics, specifications, and other requirements which shall not be altered or modified for proposal submittal or subsequent final design except for minor adjustments for coordination or except for cost reduction proposals as specified in Section 00150 - THE DESIGN BUILD PROCESS. Non-mandatory criteria shall be considered minimum requirements and may be enhanced, improved, or substituted to better suit design requirements or to improve evaluation consideration. Mandatory requirements are as listed below. All other design criteria shall be considered non-mandatory.

Work Plan
Boundary survey plan
Topographic survey plan
Any mandatory criteria referenced within Project Program.
Any other criteria listed herein which is listed, shown or implied as mandatory.

**1.7 ADDITIONAL DOCUMENTS/CRITERIA FURNISHED BY THE GOVERNMENT**

The following documents will be furnished to the Design/Build Contractor when requested by the Offeror or Contractor:

Design Criteria published by the Government such as Technical Manuals (TM), Engineer Manuals (EM), Engineer Technical Letters (ETL) and other documents related to the design referenced herein which are not available on the Internet, including the CCB website.

Commercial design criteria and specifications will not be furnished by the Government.

Conversion of electronic media to other formats shall be the responsibility of the Design Build Contractor.

**PART 2 PRODUCTS (Not Applicable)**

**PART 3 EXECUTION (Not Applicable)**

**-- End of Section --**

Section 00600 - Representations & Certifications

CLAUSES INCORPORATED BY REFERENCE

| | | |
|---|---|---|
| 52.203-2 | Certificate Of Independent Price Determination | APR 1985 |
| 52.203-11 | Certification And Disclosure Regarding Payments To Influence Certain Federal Transactions | SEP 2007 |
| 52.223-4 | Recovered Material Certification | MAY 2008 |
| 52.225-20 | Prohibition on Conducting Restricted Business Operations in Sudan--Certification | JUN 2008 |
| 52.204-3 | Taxpayer Identification | OCT 1998 |

CLAUSES INCORPORATED BY FULL TEXT

52.204-8 ANNUAL REPRESENTATIONS AND CERTIFICATIONS (FEB 2009)

(a)(1) The North American Industry Classification System (NAICS) code for this acquisition 236220.

(2) The small business size standard is $33.5 Million.

(3) The small business size standard for a concern which submits an offer in its own name, other than on a construction or service contract, but which proposes to furnish a product which it did not itself manufacture, is 500 employees.

(b)(1) If the clause at 52.204-7, Central Contractor Registration, is included in this solicitation, paragraph (d) of this provision applies.

(2) If the clause at 52.204-7 is not included in this solicitation, and the offeror is currently registered in CCR, and has completed the ORCA electronically, the offeror may choose to use paragraph (d) of this provision instead of completing the corresponding individual representations and certifications in the solicitation. The offeror shall indicate which option applies by checking one of the following boxes:

(__) Paragraph (d) applies.

(__) Paragraph (d) does not apply and the offeror has completed the individual representations and certifications in the solicitation.

(c)(1) The following representations or certifications in ORCA are applicable to this solicitation as indicated:

(i) 52.203-2, Certificate of Independent Price Determination. This provision applies to solicitations when a firm-fixed-price contract or fixed-price contract with economic price adjustment is contemplated, unless--

(A) The acquisition is to be made under the simplified acquisition procedures in Part 13;

(B) The solicitation is a request for technical proposals under two-step sealed bidding procedures; or

(C) The solicitation is for utility services for which rates are set by law or regulation.

(ii) 52.203-11, Certification and Disclosure Regarding Payments to Influence Certain Federal Transactions. This provision applies to solicitations expected to exceed $100,000.

(iii) 52.204-3, Taxpayer Identification. This provision applies to solicitations that do not include the clause at 52.204-7, Central Contractor Registration.

(iv) 52.204-5, Women-Owned Business (Other Than Small Business).This provision applies to solicitations that--

(A) Are not set aside for small business concerns;

(B) Exceed the simplified acquisition threshold; and

(C) Are for contracts that will be performed in the United States or its outlying areas.

(v) 52.209-5, Certification Regarding Responsibility Matters. This provision applies to solicitations where the contract value is expected to exceed the simplified acquisition threshold.

(vi) 52.214-14, Place of Performance--Sealed Bidding. This provision applies to invitations for bids except those in which the place of performance is specified by the Government.

(vii) 52.215-6, Place of Performance. This provision applies to solicitations unless the place of performance is specified by the Government.

(viii) 52.219-1, Small Business Program Representations (Basic & Alternate I). This provision applies to solicitations when the contract will be performed in the United States or its outlying areas.

(A) The basic provision applies when the solicitations are issued by other than DoD, NASA, and the Coast Guard.

(B) The provision with its Alternate I applies to solicitations issued by DoD, NASA, or the Coast Guard.

(ix) 52.219-2, Equal Low Bids. This provision applies to solicitations when contracting by sealed bidding and the contract will be performed in the United States or its outlying areas.

(x) 52.222-22, Previous Contracts and Compliance Reports. This provision applies to solicitations that include the clause at 52.222-26, Equal Opportunity.

(xi) 52.222-25, Affirmative Action Compliance. This provision applies to solicitations, other than those for construction, when the solicitation includes the clause at 52.222-26, Equal Opportunity.

(xii) 52.222-38, Compliance with Veterans' Employment Reporting Requirements. This provision applies to solicitations when it is anticipated the contract award will exceed the simplified acquisition threshold and the contract is not for acquisition of commercial items.

(xiii) 52.223-1, Biobased Product Certification. This provision applies to solicitations that require the delivery or specify the use of USDA-designated items; or include the clause at 52.223-2, Affirmative Procurement of Biobased Products Under Service and Construction Contracts.

(xiv) 52.223-4, Recovered Material Certification. This provision applies to solicitations that are for, or specify the use of, EPA-designated items.

(xv) 52.225-2, Buy American Act Certificate. This provision applies to solicitations containing the clause at 52.225-1.

(xvi) 52.225-4, Buy American Act--Free Trade Agreements—Israeli Trade Act Certificate. (Basic, Alternate I, and Alternate II) This provision applies to solicitations containing the clause at 52.225-3.

(A) If the acquisition value is less than $25,000, the basic provision applies.

(B) If the acquisition value is $25,000 or more but is less than $50,000, the provision with its Alternate I applies.

(C) If the acquisition value is $50,000 or more but is less than $67,826, the provision with its Alternate II applies.

(xvii) 52.225-6, Trade Agreements Certificate. This provision applies to solicitations containing the clause at 52.225-5.

(xviii) 52.225-20, Prohibition on Conducting Restricted Business Operations in Sudan--Certification.

(xix) 52.226-2, Historically Black College or University and Minority Institution Representation. This provision applies to--

(A) Solicitations for research, studies, supplies, or services of the type normally acquired from higher educational institutions; and

(B) For DoD, NASA, and Coast Guard acquisitions, solicitations that contain the clause at 52.219-23, Notice of Price Evaluation Adjustment for Small Disadvantaged Business Concerns.

(2) The following certifications are applicable as indicated by the Contracting Officer:

(Contracting Officer check as appropriate.)

----(i) 52.219-19, Small Business Concern Representation for the Small Business Competitiveness Demonstration Program.

------(ii) 52.219-21, Small Business Size Representation for Targeted Industry Categories Under the Small Business Competitiveness Demonstration Program.

------(iii) 52.219-22, Small Disadvantaged Business Status.

------(A) Basic.

------(B) Alternate I.

X------(iv) 52.222-18, Certification Regarding Knowledge of Child Labor for Listed End Products.

------(v) 52.222-48, Exemption from Application of the Service Contract Act to Contracts for Maintenance, Calibration, or Repair of Certain Equipment Certification.

------(vi) 52.222-52 Exemption from Application of the Service Contract Act to Contracts for Certain Services--Certification.

------(vii) 52.223-9, with its Alternate I, Estimate of Percentage of Recovered Material Content for EPA-Designated Products (Alternate I only).

------(viii) 52.223-13, Certification of Toxic Chemical Release Reporting.

------(ix) 52.227-6, Royalty Information.

------ (A) Basic.

------ (B) Alternate I.

------(x) 52.227-15, Representation of Limited Rights Data and Restricted Computer Software.

(d) The offeror has completed the annual representations and certifications electronically via the Online Representations and Certifications Application (ORCA) website at http://orca.bpn.gov. After reviewing the ORCA

database information, the offeror verifies by submission of the offer that the representations and certifications currently posted electronically that apply to this solicitation as indicated in paragraph (c) of this provision have been entered or updated within the last 12 months, are current, accurate, complete, and applicable to this solicitation (including the business size standard applicable to the NAICS code referenced for this solicitation), as of the date of this offer and are incorporated in this offer by reference (see FAR 4.1201); except for the changes identified below (offeror to insert changes, identifyingchange by clause number, title, date). These amended representation(s) and/or certification(s) are also incorporated in this offer and are current, accurate, and complete as of the date of this offer.

| FAR Clause | Title | Date | Change |
|---|---|---|---|
| | | | |

Any changes provided by the offeror are applicable to this solicitation only, and do not result in an update to the representations and certifications posted on ORCA.

(End of Provision)

## CLAUSES INCORPORATED BY REFERENCE

| | | |
|---|---|---|
| 52.209-5 | Certification Regarding Responsibility Matters | DEC 2008 |
| 52.215-6 | Place of Performance | OCT 1997 |
| 52.222-18 | Certification Regarding Knowledge of Child Labor for Listed End Products | FEB 2001 |
| 52.222-22 | Previous Contracts And Compliance Reports | FEB 1999 |

## DBA REPRESENTATION

**DEFENSE BASE ACT INSURANCE RATES – LIMITATION – FIXED-PRICE (OCT 2008)**

(a) The U. S. Army Corps of Engineers (USACE) has entered into a contract with **CNA Insurance** to provide all Defense Base Act (DBA) insurance to USACE and JCC-I/A contractors and subcontractors at a contracted fixed rate. The fixed rates for this insurance are as follows:

| | | |
|---|---|---|
| Service | $4.00 | per $100 of employee remuneration |
| Construction | $7.50 | per $100 of employee remuneration |
| Aviation | $20.00 | per $100 of employee remuneration |
| Security | $12.50 | per $100 of employee remuneration |

(b) Bidders/Offerors should compute the total compensation or total payroll, (salary, plus overseas recruitment incentive and post differential, but excludes per diem, housing allowance, travel expenses, temporary quarters allowance, education allowance and other miscellaneous post allowances) to be paid to employees who will be covered by DBA insurance. Compute the cost of DBA Insurance by utilizing the spaces provided below for the base period and whatever extension there may be thereafter, if applicable.

(1) Compensation of Covered Employees: _____
(Total Payroll Not Total Contract Value) Ex:: If total Payroll is $100,000.00

(2) Applicable DBA Rate: _____
(Use appropriate Rate) Ex: If a Service, the rate is $4.00/$100 or 4%

(3) Total DBA Cost: _____
(Amount of DBA Premium) Ex:: $100 K multiplied by 4% is $4,000.00

(c) Bidders/Offerors shall include a statement as to whether or not local nationals or third country nationals will be employed on the resultant contract.

(d) CNA Insurance is utilizing Rutherfoord International as their managing Broker. The primary POC is the USACE DBA Program Administrator is Ramoan Jones, (703) 813-6571 ramoan.jones@rutherfoord.com. The alternate POC is Sara Payne, Senior Vice President, (703) 813-6503 sara.payne@rutherfoord.com.

(End)

Section 00700 - Contract Clauses

CLAUSES INCORPORATED BY REFERENCE

| | | |
|---|---|---|
| 52.202-1 | Definitions | JUL 2004 |
| 52.203-3 | Gratuities | APR 1984 |
| 52.203-5 | Covenant Against Contingent Fees | APR 1984 |
| 52.203-6 | Restrictions On Subcontractor Sales To The Government | SEP 2006 |
| 52.203-7 | Anti-Kickback Procedures | JUL 1995 |
| 52.203-8 | Cancellation, Rescission, and Recovery of Funds for Illegal or Improper Activity | JAN 1997 |
| 52.203-10 | Price Or Fee Adjustment For Illegal Or Improper Activity | JAN 1997 |
| 52.203-12 | Limitation On Payments To Influence Certain Federal Transactions | SEP 2007 |
| 52.203-13 | Contractor Code of Business Ethics and Conduct | DEC 2008 |
| 52.204-4 | Printed or Copied Double-Sided on Recycled Paper | AUG 2000 |
| 52.209-6 | Protecting the Government's Interest When Subcontracting With Contractors Debarred, Suspended, or Proposed for Debarment | SEP 2006 |
| 52.211-13 | Time Extensions | SEP 2000 |
| 52.215-11 | Price Reduction for Defective Cost or Pricing Data--Modifications | OCT 1997 |
| 52.215-13 | Subcontractor Cost or Pricing Data--Modifications | OCT 1997 |
| 52.215-19 | Notification of Ownership Changes | OCT 1997 |
| 52.215-21 | Requirements for Cost or Pricing Data or Information Other Than Cost or Pricing Data--Modifications | OCT 1997 |
| 52.222-19 | Child Labor -- Cooperation with Authorities and Remedies | FEB 2008 |
| 52.222-21 | Prohibition Of Segregated Facilities | FEB 1999 |
| 52.222-26 | Equal Opportunity | MAR 2007 |
| 52.222-27 | Affirmative Action Compliance Requirements for Construction | FEB 1999 |
| 52.222-29 | Notification Of Visa Denial | JUN 2003 |
| 52.222-35 | Equal Opportunity For Special Disabled Veterans, Veterans of the Vietnam Era, and Other Eligible Veterans | SEP 2006 |
| 52.222-36 | Affirmative Action For Workers With Disabilities | JUN 1998 |
| 52.222-50 | Combating Trafficking in Persons | FEB 2009 |
| 52.223-2 | Affirmative Procurement of Biobased Products Under Service and Construction Contracts | DEC 2007 |
| 52.223-6 | Drug-Free Workplace | MAY 2001 |
| 52.225-13 | Restrictions on Certain Foreign Purchases | JUN 2008 |
| 52.225-14 | Inconsistency Between English Version And Translation Of Contract | FEB 2000 |
| 52.228-3 | Worker's Compensation Insurance (Defense Base Act) | APR 1984 |
| 52.229-6 | Taxes--Foreign Fixed-Price Contracts | JUN 2003 |
| 52.232-5 | Payments under Fixed-Price Construction Contracts | SEP 2002 |
| 52.232-17 | Interest | OCT 2008 |
| 52.232-27 | Prompt Payment for Construction Contracts | OCT 2008 |
| 52.233-1 | Disputes | JUL 2002 |
| 52.233-3 | Protest After Award | AUG 1996 |
| 52.233-4 | Applicable Law for Breach of Contract Claim | OCT 2004 |
| 52.236-2 | Differing Site Conditions | APR 1984 |
| 52.236-3 | Site Investigation and Conditions Affecting the Work | APR 1984 |
| 52.236-4 | Physical Data | APR 1984 |
| 52.236-5 | Material and Workmanship | APR 1984 |
| 52.236-6 | Superintendence by the Contractor | APR 1984 |

| | | |
|---|---|---|
| 52.236-7 | Permits and Responsibilities | NOV 1991 |
| 52.236-8 | Other Contracts | APR 1984 |
| 52.236-9 | Protection of Existing Vegetation, Structures, Equipment, Utilities, and Improvements | APR 1984 |
| 52.236-10 | Operations and Storage Areas | APR 1984 |
| 52.236-11 | Use and Possession Prior to Completion | APR 1984 |
| 52.236-12 | Cleaning Up | APR 1984 |
| 52.236-13 Alt I | Accident Prevention (Nov 1991) - Alternate I | NOV 1991 |
| 52.236-15 | Schedules for Construction Contracts | APR 1984 |
| 52.236-17 | Layout of Work | APR 1984 |
| 52.236-21 Alt I | Specifications and Drawings for Construction (Feb 1997) - Alternate I | APR 1984 |
| 52.236-26 | Preconstruction Conference | FEB 1995 |
| 52.242-13 | Bankruptcy | JUL 1995 |
| 52.242-14 | Suspension of Work | APR 1984 |
| 52.243-4 | Changes | JUN 2007 |
| 52.244-5 | Competition In Subcontracting | DEC 1996 |
| 52.244-6 | Subcontracts for Commercial Items | MAR 2009 |
| 52.246-12 | Inspection of Construction | AUG 1996 |
| 52.246-21 | Warranty of Construction | MAR 1994 |
| 52.247-34 | F.O.B. Destination | NOV 1991 |
| 52.247-63 | Preference For U.S. Flag Air Carriers | JUN 2003 |
| 52.249-2 Alt I | Termination for Convenience of the Government (Fixed-Price) (May 2004) - Alternate I | SEP 1996 |
| 52.249-10 Alt I | Default (Fixed-Price Construction) (Apr 1984) Alternate I | APR 1984 |
| 52.253-1 | Computer Generated Forms | JAN 1991 |
| 252.201-7000 | Contracting Officer's Representative | DEC 1991 |
| 252.203-7001 | Prohibition On Persons Convicted of Fraud or Other Defense-Contract-Related Felonies | DEC 2008 |
| 252.204-7000 | Disclosure Of Information | DEC 1991 |
| 252.204-7003 | Control Of Government Personnel Work Product | APR 1992 |
| 252.209-7004 | Subcontracting With Firms That Are Owned or Controlled By The Government of a Terrorist Country | DEC 2006 |
| 252.215-7000 | Pricing Adjustments | DEC 1991 |
| 252.215-7002 | Cost Estimating System Requirements | DEC 2006 |
| 252.222-7002 | Compliance With Local Labor Laws (Overseas) | JUN 1997 |
| 252.223-7004 | Drug Free Work Force | SEP 1988 |
| 252.225-7005 | Identification Of Expenditures In The United States | JUN 2005 |
| 252.225-7041 | Correspondence in English | JUN 1997 |
| 252.225-7042 | Authorization to Perform | APR 2003 |
| 252.227-7022 | Government Rights (Unlimited) | MAR 1979 |
| 252.227-7023 | Drawings and Other Data to become Property of Government | MAR 1979 |
| 252.227-7030 | Technical Data--Withholding Of Payment | MAR 2000 |
| 252.227-7033 | Rights in Shop Drawings | APR 1966 |
| 252.229-7000 | Invoices Exclusive of Taxes or Duties | JUN 1997 |
| 252.231-7000 | Supplemental Cost Principles | DEC 1991 |
| 252.232-7003 | Electronic Submission of Payment Requests and Receiving Reports | MAR 2008 |
| 252.232-7003 | Electronic Submission of Payment Requests and Receiving Reports | MAR 2008 |
| 252.232-7008 | Assignment of Claims (Overseas) | JUN 1997 |
| 252.232-7010 | Levies on Contract Payments | DEC 2006 |
| 252.233-7001 | Choice of Law (Overseas) | JUN 1997 |
| 252.236-7000 | Modification Proposals-Price Breakdown | DEC 1991 |
| 252.236-7008 | Contract Prices-Bidding Schedules | DEC 1991 |
| 252.243-7001 | Pricing Of Contract Modifications | DEC 1991 |

| | | |
|---|---|---|
| 252.243-7002 | Requests for Equitable Adjustment | MAR 1998 |
| 252.247-7023 | Transportation of Supplies by Sea | MAY 2002 |
| 252.247-7024 | Notification Of Transportation Of Supplies By Sea | MAR 2000 |

CLAUSES INCORPORATED BY FULL TEXT

52.211-10 COMMENCEMENT, PROSECUTION, AND COMPLETION OF WORK (APR 1984)

The Contractor shall be required to (a) commence work under this contract within 3 calendar days after the date the Contractor receives the notice to proceed, (b) prosecute the work diligently, and (c) complete the entire work ready for use not later than 353 days after NTP. The time stated for completion shall include final cleanup of the premises.

(End of clause)

52.211-12 LIQUIDATED DAMAGES--CONSTRUCTION (SEP 2000)

(a) If the Contractor fails to complete the work within the time specified in the contract, the Contractor shall pay liquidated damages to the Government in the amount of $1950.00 for each calendar day of delay until the work is completed or accepted.

(b) If the Government terminates the Contractor's right to proceed, liquidated damages will continue to accrue until the work is completed. These liquidated damages are in addition to excess costs of repurchase under the Termination clause.

(End of clause)

52.215-19 NOTIFICATION OF OWNERSHIP CHANGES (OCT 1997)

(a) The Contractor shall make the following notifications in writing:

(1) When the Contractor becomes aware that a change in its ownership has occurred, or is certain to occur, that could result in changes in the valuation of its capitalized assets in the accounting records, the Contractor shall notify the Administrative Contracting Officer (ACO) within 30 days.

(2) The Contractor shall also notify the ACO within 30 days whenever changes to asset valuations or any other cost changes have occurred or are certain to occur as a result of a change in ownership.

(b) The Contractor shall--

(1) Maintain current, accurate, and complete inventory records of assets and their costs;

(2) Provide the ACO or designated representative ready access to the records upon request;

(3) Ensure that all individual and grouped assets, their capitalized values, accumulated depreciation or amortization, and remaining useful lives are identified accurately before and after each of the Contractor's

ownership changes; and

(4) Retain and continue to maintain depreciation and amortization schedules based on the asset records maintained before each Contractor ownership change.

The Contractor shall include the substance of this clause in all subcontracts under this contract that meet the applicability requirement of FAR 15.408(k).

(End of clause)

52.232-18 AVAILABILITY OF FUNDS (APR 1984)

Funds are not presently available for this contract. The Government's obligation under this contract is contingent upon the availability of appropriated funds from which payment for contract purposes can be made. No legal liability on the part of the Government for any payment may arise until funds are made available to the Contracting Officer for this contract and until the Contractor receives notice of such availability, to be confirmed in writing by the Contracting Officer.

(End of clause)

52.232-34 PAYMENT BY ELECTRONIC FUNDS TRANSFER—OTHER THAN CENTRAL CONTRACTOR REGISTRATION (MAY 1999)

(a) Method of payment. (1) All payments by the Government under this contract shall be made by electronic funds transfer (EFT) except as provided in paragraph (a)(2) of this clause. As used in this clause, the term “EFT” refers to the funds transfer and may also include the payment information transfer.

(2) In the event the Government is unable to release one or more payments by EFT, the Contractor agrees to either--

(i) Accept payment by check or some other mutually agreeable method of payment; or

(ii) Request the Government to extend payment due dates until such time as the Government makes payment by EFT (but see paragraph (d) of this clause).

(b) Mandatory submission of Contractor's EFT information. (1) The Contractor is required to provide the Government with the information required to make payment by EFT (see paragraph (j) of this clause). The Contractor shall provide this information directly to the office designated in this contract to receive that information (hereafter: “designated office”") by 5 days after award. If not otherwise specified in this contract, the payment office is the designated office for receipt of the Contractor's EFT information. If more than one designated office is named for the contract, the Contractor shall provide a separate notice to each office. In the event that the EFT information changes, the Contractor shall be responsible for providing the updated information to the designated office(s).

(2) If the Contractor provides EFT information applicable to multiple contracts, the Contractor shall specifically state the applicability of this EFT information in terms acceptable to the designated office. However, EFT information supplied to a designated office shall be applicable only to contracts that identify that designated office as the office to receive EFT information for that contract.

(c) Mechanisms for EFT payment. The Government may make payment by EFT through either the Automated Clearing House (ACH) network, subject to the rules of the National Automated Clearing House Association, or the

Fedwire Transfer System. The rules governing Federal payments through the ACH are contained in 31 CFR part 210.

(d) Suspension of payment. (1) The Government is not required to make any payment under this contract until after receipt, by the designated office, of the correct EFT payment information from the Contractor. Until receipt of the correct EFT information, any invoice or contract financing request shall be deemed not to be a proper invoice for the purpose of prompt payment under this contract. The prompt payment terms of the contract regarding notice of an improper invoice and delays in accrual of interest penalties apply.

(2) If the EFT information changes after submission of correct EFT information, the Government shall begin using the changed EFT information no later than 30 days after its receipt by the designated office to the extent payment is made by EFT. However, the Contractor may request that no further payments be made until the updated EFT information is implemented by the payment office. If such suspension would result in a late payment under the prompt payment terms of this contract, the Contractor's request for suspension shall extend the due date for payment by the number of days of the suspension.

(e) Liability for uncompleted or erroneous transfers. (1) If an uncompleted or erroneous transfer occurs because the Government used the Contractor's EFT information incorrectly, the Government remains responsible for--

(i) Making a correct payment;

(ii) Paying any prompt payment penalty due; and

(iii) Recovering any erroneously directed funds.

(2) If an uncompleted or erroneous transfer occurs because the Contractor's EFT information was incorrect, or was revised within 30 days of Government release of the EFT payment transaction instruction to the Federal Reserve System, and--

(i) If the funds are no longer under the control of the payment office, the Government is deemed to have made payment and the Contractor is responsible for recovery of any erroneously directed funds; or

(ii) If the funds remain under the control of the payment office, the Government shall not make payment and the provisions of paragraph (d) shall apply.

(f) EFT and prompt payment. A payment shall be deemed to have been made in a timely manner in accordance with the prompt payment terms of this contract if, in the EFT payment transaction instruction released to the Federal Reserve System, the date specified for settlement of the payment is on or before the prompt payment due date, provided the specified payment date is a valid date under the rules of the Federal Reserve System.

(g) EFT and assignment of claims. If the Contractor assigns the proceeds of this contract as provided for in the assignment of claims terms of this contract, the Contractor shall require as a condition of any such assignment, that the assignee shall provide the EFT information required by paragraph (j) of this clause to the designated office, and shall be paid by EFT in accordance with the terms of this clause. In all respects, the requirements of this clause shall apply to the assignee as if it were the Contractor. EFT information that shows the ultimate recipient of the transfer to be other than the Contractor, in the absence of a proper assignment of claims acceptable to the Government, is incorrect EFT information within the meaning of paragraph (d) of this clause.

(h) Liability for change of EFT information by financial agent. The Government is not liable for errors resulting from changes to EFT information provided by the Contractor's financial agent.

(i) Payment information. The payment or disbursing office shall forward to the Contractor available payment information that is suitable for transmission as of the date of release of the EFT instruction to the Federal Reserve System. The Government may request the Contractor to designate a desired format and method(s) for delivery of payment information from a list of formats and methods the payment office is capable of executing. However, the Government does not guarantee that any particular format or method of delivery is available at any particular

payment office and retains the latitude to use the format and delivery method most convenient to the Government. If the Government makes payment by check in accordance with paragraph (a) of this clause, the Government shall mail the payment information to the remittance address in the contract.

(j) EFT information. The Contractor shall provide the following information to the designated office. The Contractor may supply this data for this or multiple contracts (see paragraph (b) of this clause). The Contractor shall designate a single financial agent per contract capable of receiving and processing the EFT information using the EFT methods described in paragraph (c) of this clause.

(1) The contract number (or other procurement identification number).

(2) The Contractor's name and remittance address, as stated in the contract(s).

(3) The signature (manual or electronic, as appropriate), title, and telephone number of the Contractor official authorized to provide this information.

(4) The name, address, and 9-digit Routing Transit Number of the Contractor's financial agent.

(5) The Contractor's account number and the type of account (checking, saving, or lockbox).

(6) If applicable, the Fedwire Transfer System telegraphic abbreviation of the Contractor's financial agent.

(7) If applicable, the Contractor shall also provide the name, address, telegraphic abbreviation, and 9-digit Routing Transit Number of the correspondent financial institution receiving the wire transfer payment if the Contractor's financial agent is not directly on-line to the Fedwire Transfer System; and, therefore, not the receiver of the wire transfer payment.

(End of clause)

52.236-1 PERFORMANCE OF WORK BY THE CONTRACTOR (APR 1984)

The Contractor shall perform on the site, and with its own organization, work equivalent to at least 20 percent of the total amount of work to be performed under the contract. This percentage may be reduced by a supplemental agreement to this contract if, during performing the work, the Contractor requests a reduction and the Contracting Officer determines that the reduction would be to the advantage of the Government.

(End of clause)

52.249-5000 BASIS FOR SETTLEMENT OF PROPOSALS

Actual costs will be used to determine equipment costs for a settlement proposal submitted on the total cost basis under FAR 49.206-2(b). In evaluating a terminations settlement proposal using the total cost basis, the following principles will be applied to determine allowable equipment costs:

(1) Actual costs for each piece of equipment, or groups of similar serial or series equipment, need not be available in the contractor's accounting records to determine total actual equipment costs.

(2) If equipment costs have been allocated to a contract using predetermined rates , those charges will be adjusted to actual costs.

(3) Recorded job costs adjusted for unallowable expenses will be used to determine equipment operating expenses.

(4) Ownership costs (depreciation) will be determined using the contractor's depreciation schedule (subject to the provisions of FAR 31.205-11).

(5) License, taxes, storage and insurance costs are normally recovered as an indirect expense and unless the contractor charges these costs directly to contracts, they will be recovered through the indirect expense rate.

(End of Clause)

52.252-2 CLAUSES INCORPORATED BY REFERENCE (FEB 1998)

This contract incorporates one or more clauses by reference, with the same force and effect as if they were given in full text. Upon request, the Contracting Officer will make their full text available. Also, the full text of a clause may be accessed electronically at this/these address(es):

FAR: http://acquisition.gov/far/index.html

DFARS: http://farsite.hill.af.mil/VFDFAR1.HTM

AFARS: http://farsite.hill.af.mil/VFAFAR1.HTM

EFARS: http://www.usace.army.mil/CECT/Pages/EFARS.aspx

(End of clause)

252.225-7026 ACQUISITION RESTRICTED TO PRODUCTS OR SERVICES FROM AFGHANISTAN (SEP 2008)

(a) Definitions. As used in this clause--

(1) Product from Afghanistan means a product that is mined, produced, or manufactured in Afghanistan.

(2) Service from Afghanistan means a service that is performed in Afghanistan predominantly by citizens or permanent resident aliens of Afghanistan.

(b) The Contractor shall provide only products from Afghanistan or services from Afghanistan under this contract.

(End of clause)

252.225-7043 ANTITERRORISM/FORCE PROTECTION POLICY FOR DEFENSE CONTRACTORS OUTSIDE THE UNITED STATES (MAR 2006)

(a) Definition. United States, as used in this clause, means, the 50 States, the District of Columbia, and outlying areas.

(b) Except as provided in paragraph (c) of this clause, the Contractor and its subcontractors, if performing or traveling outside the United States under this contract, shall--

(1) Affiliate with the Overseas Security Advisory Council, if the Contractor or subcontractor is a U.S. entity;

(2) Ensure that Contractor and subcontractor personnel who are U.S. nationals and are in-country on a non-transitory basis, register with the U.S. Embassy, and that Contractor and subcontractor personnel who are third country nationals comply with any security related requirements of the Embassy of their nationality;

(3) Provide, to Contractor and subcontractor personnel, antiterrorism/force protection awareness information commensurate with that which the Department of Defense (DoD) provides to its military and civilian personnel and their families, to the extent such information can be made available prior to travel outside the United States; and

(4) Obtain and comply with the most current antiterrorism/force protection guidance for Contractor and subcontractor personnel.

(c) The requirements of this clause do not apply to any subcontractor that is--

(1) A foreign government;

(2) A representative of a foreign government; or

(3) A foreign corporation wholly owned by a foreign government.

(d) Information and guidance pertaining to DoD antiterrorism/force protection can be obtained from HQDA-AT; telephone, DSN 222-9832 or commercial (703) 692-9832

(End of clause)

252.227-7013 RIGHTS IN TECHNICAL DATA--NONCOMMERCIAL ITEMS. (NOV 1995)

(a) Definitions. As used in this clause:

(1) Computer data base means a collection of data recorded in a form capable of being processed by a computer. The term does not include computer software.

(2) Computer program means a set of instructions, rules, or routines recorded in a form that is capable of causing a computer to perform a specific operation or series of operations.

(3) Computer software means computer programs, source code, source code listings, object code listings, design details, algorithms, processes, flow charts, formulae and related material that would enable the software to be reproduced, recreated, or recompiled. Computer software does not include computer data bases or computer software documentation.

(4) Computer software documentation means owner's manuals, user's manuals, installation instructions, operating instructions, and other similar items, regardless of storage medium, that explain the capabilities of the computer software or provide instructions for using the software.

(5) Detailed manufacturing or process data means technical data that describe the steps, sequences, and conditions of manufacturing, processing or assembly used by the manufacturer to produce an item or component or to perform a process.

(6) Developed means that an item, component, or process exists and is workable. Thus, the item or component must have been constructed or the process practiced. Workability is generally established when the item, component, or process has been analyzed or tested sufficiently to demonstrate to reasonable people skilled in the applicable art that there is a high probability that it will operate as intended. Whether, how much, and what type of

analysis or testing is required to establish workability depends on the nature of the item, component, or process, and the state of the art. To be considered "developed," the item, component, or process need not be at the stage where it could be offered for sale or sold on the commercial market, nor must the item, component, or process be actually reduced to practice within the meaning of Title 35 of the United States Code.

(7) Developed exclusively at private expense means development was accomplished entirely with costs charged to indirect cost pools, costs not allocated to a government contract, or any combination thereof.

(i) Private expense determinations should be made at the lowest practicable level.

(ii) Under fixed-price contracts, when total costs are greater than the firm-fixed-price or ceiling price of the contract, the additional development costs necessary to complete development shall not be considered when determining whether development was at government, private, or mixed expense.

(8) Developed exclusively with government funds means development was not accomplished exclusively or partially at private expense.

(9) Developed with mixed funding means development was accomplished partially with costs charged to indirect cost pools and/or costs not allocated to a government contract, and partially with costs charged directly to a government contract.

(10) Form, fit, and function data means technical data that describes the required overall physical, functional, and performance characteristics (along with the qualification requirements, if applicable) of an item, component, or process to the extent necessary to permit identification of physically and functionally interchangeable items.

(11) Government purpose means any activity in which the United States Government is a party, including cooperative agreements with international or multi-national defense organizations, or sales or transfers by the United States Government to foreign governments or international organizations. Government purposes include competitive procurement, but do not include the rights to use, modify, reproduce, release, perform, display, or disclose technical data for commercial purposes or authorize others to do so.

(12) Government purpose rights means the rights to--

(i) Use, modify, reproduce, release, perform, display, or disclose technical data within the Government without restriction; and

(ii) Release or disclose technical data outside the Government and authorize persons to whom release or disclosure has been made to use, modify, reproduce, release, perform, display, or disclose that data for United States government purposes.

(13) Limited rights means the rights to use, modify, reproduce, release, perform, display, or disclose technical data, in whole or in part, within the Government. The Government may not, without the written permission of the party asserting limited rights, release or disclose the technical data outside the Government, use the technical data for manufacture, or authorize the technical data to be used by another party, except that the Government may reproduce, release or disclose such data or authorize the use or reproduction of the data by persons outside the Government if reproduction, release, disclosure, or use is--

(i) Necessary for emergency repair and overhaul; or

(ii) A release or disclosure of technical data (other than detailed manufacturing or process data) to, or use of such data by, a foreign government that is in the interest of the Government and is required for evaluational or informational purposes;

(iii) Subject to a prohibition on the further reproduction, release, disclosure, or use of the technical data; and

(iv) The contractor or subcontractor asserting the restriction is notified of such reproduction, release, disclosure, or use.

(14) Technical data means recorded information, regardless of the form or method of the recording, of a scientific or technical nature (including computer software documentation). The term does not include computer software or data incidental to contract administration, such as financial and/or management information.

(15) Unlimited rights means rights to use, modify, reproduce, perform, display, release, or disclose technical data in whole or in part, in any manner, and for any purpose whatsoever, and to have or authorize others to do so.

(b) Rights in technical data. The Contractor grants or shall obtain for the Government the following royalty free, world-wide, nonexclusive, irrevocable license rights in technical data other than computer software documentation (see the Rights in Noncommercial Computer Software and Noncommercial Computer Software Documentation clause of this contract for rights in computer software documentation):

(1) Unlimited rights.

The Government shall have unlimited rights in technical data that are--

(i) Data pertaining to an item, component, or process which has been or will be developed exclusively with Government funds;

(ii) Studies, analyses, test data, or similar data produced for this contract, when the study, analysis, test, or similar work was specified as an element of performance;

(iii) Created exclusively with Government funds in the performance of a contract that does not require the development, manufacture, construction, or production of items, components, or processes;

(iv) Form, fit, and function data;

(v) Necessary for installation, operation, maintenance, or training purposes (other than detailed manufacturing or process data);

(vi) Corrections or changes to technical data furnished to the Contractor by the Government;

(vii) Otherwise publicly available or have been released or disclosed by the Contractor or subcontractor without restrictions on further use, release or disclosure, other than a release or disclosure resulting from the sale, transfer, or other assignment of interest in the technical data to another party or the sale or transfer of some or all of a business entity or its assets to another party;

(viii) Data in which the Government has obtained unlimited rights under another Government contract or as a result of negotiations; or

(ix) Data furnished to the Government, under this or any other Government contract or subcontract thereunder, with--

(A) Government purpose license rights or limited rights and the restrictive condition(s) has/have expired; or

(B) Government purpose rights and the Contractor's exclusive right to use such data for commercial purposes has expired.

(2) Government purpose rights.

(i) The Government shall have government purpose rights for a five-year period, or such other period as may be negotiated, in technical data--

(A) That pertain to items, components, or processes developed with mixed funding except when the Government is entitled to unlimited rights in such data as provided in paragraphs (b)(ii) and (b)(iv) through (b)(ix) of this clause; or

(B) Created with mixed funding in the performance of a contract that does not require the development, manufacture, construction, or production of items, components, or processes.

(ii) The five-year period, or such other period as may have been negotiated, shall commence upon execution of the contract, subcontract, letter contract (or similar contractual instrument), contract modification, or option exercise that required development of the items, components, or processes or creation of the data described in paragraph (b)(2)(i)(B) of this clause. Upon expiration of the five-year or other negotiated period, the Government shall have unlimited rights in the technical data.

(iii) The Government shall not release or disclose technical data in which it has government purpose rights unless-

(A) Prior to release or disclosure, the intended recipient is subject to the non-disclosure agreement at 227.7103-7 of the Defense Federal Acquisition Regulation Supplement (DFARS); or

(B) The recipient is a Government contractor receiving access to the data for performance of a Government contract that contains the clause at DFARS 252.227-7025, Limitations on the Use or Disclosure of Government-Furnished Information Marked with Restrictive Legends.

(iv) The Contractor has the exclusive right, including the right to license others, to use technical data in which the Government has obtained government purpose rights under this contract for any commercial purpose during the time period specified in the government purpose rights legend prescribed in paragraph (f)(2) of this clause.

(3) Limited rights.

(i) Except as provided in paragraphs (b)(1)(ii) and (b)(1)(iv) through (b)(1)(ix) of this clause, the Government shall have limited rights in technical data--

(A) Pertaining to items, components, or processes developed exclusively at private expense and marked with the limited rights legend prescribed in paragraph (f) of this clause; or

(B) Created exclusively at private expense in the performance of a contract that does not require the development, manufacture, construction, or production of items, components, or processes.

(ii) The Government shall require a recipient of limited rights data for emergency repair or overhaul to destroy the data and all copies in its possession promptly following completion of the emergency repair/overhaul and to notify the Contractor that the data have been destroyed.

(iii) The Contractor, its subcontractors, and suppliers are not required to provide the Government additional rights to use, modify, reproduce, release, perform, display, or disclose technical data furnished to the Government with limited rights. However, if the Government desires to obtain additional rights in technical data in which it has limited rights, the Contractor agrees to promptly enter into negotiations with the Contracting Officer to determine whether there are acceptable terms for transferring such rights. All technical data in which the Contractor has granted the Government additional rights shall be listed or described in a license agreement made part of the contract. The license shall enumerate the additional rights granted the Government in such data.

(4) Specifically negotiated license rights.

The standard license rights granted to the Government under paragraphs (b)(1) through (b)(3) of this clause, including the period during which the Government shall have government purpose rights in technical data, may be modified by mutual agreement to provide such rights as the parties consider appropriate but shall not provide the Government lesser rights than are enumerated in paragraph (a)(13) of this clause. Any rights so negotiated shall be identified in a license agreement made part of this contract.

(5) Prior government rights.

Technical data that will be delivered, furnished, or otherwise provided to the Government under this contract, in which the Government has previously obtained rights shall be delivered, furnished, or provided with the pre-existing rights, unless--

(i) The parties have agreed otherwise; or

(ii) Any restrictions on the Government's rights to use, modify, reproduce, release, perform, display, or disclose the data have expired or no longer apply.

(6) Release from liability.

The Contractor agrees to release the Government from liability for any release or disclosure of technical data made in accordance with paragraph (a)(13) or (b)(2)(iii) of this clause, in accordance with the terms of a license negotiated under paragraph (b)(4) of this clause, or by others to whom the recipient has released or disclosed the data and to seek relief solely from the party who has improperly used, modified, reproduced, released, performed, displayed, or disclosed Contractor data marked with restrictive legends.

(c) Contractor rights in technical data. All rights not granted to the Government are retained by the Contractor.

(d) Third party copyrighted data. The Contractor shall not, without the written approval of the Contracting Officer, incorporate any copyrighted data in the technical data to be delivered under this contract unless the Contractor is the copyright owner or has obtained for the Government the license rights necessary to perfect a license or licenses in the deliverable data of the appropriate scope set forth in paragraph (b) of this clause, and has affixed a statement of the license or licenses obtained on behalf of the Government and other persons to the data transmittal document.

(e) Identification and delivery of data to be furnished with restrictions on use, release, or disclosure. (1) This paragraph does not apply to restrictions based solely on copyright.

(2) Except as provided in paragraph (e)(3) of this clause, technical data that the Contractor asserts should be furnished to the Government with restrictions on use, release, or disclosure are identified in an attachment to this contract (the Attachment). The Contractor shall not deliver any data with restrictive markings unless the data are listed on the Attachment.

(3) In addition to the assertions made in the Attachment, other assertions may be identified after award when based on new information or inadvertent omissions unless the inadvertent omissions would have materially affected the source selection decision. Such identification and assertion shall be submitted to the Contracting Officer as soon as practicable prior to the scheduled date for delivery of the data, in the following format, and signed by an official authorized to contractually obligate the Contractor: Identification and Assertion of Restrictions on the Government's Use, Release, or Disclosure of Technical Data.

The Contractor asserts for itself, or the persons identified below, that the Government's rights to use, release, or disclose the following technical data should be restricted--

| Technical data to be Furnished With Restrictions \1/ | Basis for Assertion \2/ | Asserted Rights Category \3/ | Name of Person Asserting Restrictions \4/ |
|---|---|---|---|
| (LIST) | (LIST) | (LIST) | (LIST) |

\1/ If the assertion is applicable to items, components or processes developed at private expense, identify both the data and each such items, component, or process.

\2/ Generally, the development of an item, component, or process at private expense, either exclusively or partially, is the only basis for asserting restrictions on the Government's rights to use, release, or disclose technical data pertaining to such items, components, or processes. Indicate whether development was exclusively or partially at private expense. If development was not at private expense, enter the specific reason for asserting that the Government's rights should be restricted.

\3/ Enter asserted rights category (e.g., government purpose license rights from a prior contract, rights in SBIR data generated under another contract, limited or government purpose rights under this or a prior contract, or specifically negotiated licenses).

\4/ Corporation, individual, or other person, as appropriate.
Date _____

Printed Name and Title _____

_____

Signature _____

(End of identification and assertion)

(4) When requested by the Contracting Officer, the Contractor shall provide sufficient information to enable the Contracting Officer to evaluate the Contractor's assertions. The Contracting Officer reserves the right to add the Contractor's assertions to the Attachment and validate any listed assertion, at a later date, in accordance with the procedures of the Validation of Restrictive Markings on Technical Data clause of this contract.

(f) Marking requirements. The Contractor, and its subcontractors or suppliers, may only assert restrictions on the Government's rights to use, modify, reproduce, release, perform, display, or disclose technical data to be delivered under this contract by marking the deliverable data subject to restriction. Except as provided in paragraph (f)(5) of this clause, only the following legends are authorized under this contract: the government purpose rights legend at paragraph (f)(2) of this clause; the limited rights legend at paragraph (f)(3) of this clause; or the special license rights legend at paragraph (f)(4) of this clause; and/or a notice of copyright as prescribed under 17 U.S.C. 401 or 402.

(1) General marking instructions. The Contractor, or its subcontractors or suppliers, shall conspicuously and legibly mark the appropriate legend on all technical data that qualify for such markings. The authorized legends shall be placed on the transmittal document or storage container and, for printed material, each page of the printed material containing technical data for which restrictions are asserted. When only portions of a page of printed material are subject to the asserted restrictions, such portions shall be identified by circling, underscoring, with a note, or other appropriate identifier. Technical data transmitted directly from one computer or computer terminal to another shall contain a notice of asserted restrictions. Reproductions of technical data or any portions thereof subject to asserted restrictions shall also reproduce the asserted restrictions.

(2) Government purpose rights markings. Data delivered or otherwise furnished to the Government purpose rights shall be marked as follows:

Government Purpose Rights

Contract No. _____

Contractor Name _____

Contractor Address _____

_____

Expiration Date _____

The Government's rights to use, modify, reproduce, release, perform, display, or disclose these technical data are restricted by paragraph (b)(2) of the Rights in Technical Data--Noncommercial Items clause contained in the above identified contract. No restrictions apply after the expiration date shown above. Any reproduction of technical data or portions thereof marked with this legend must also reproduce the markings.

(End of legend)

(3) Limited rights markings. Data delivered or otherwise furnished to the Government with limited rights shall be marked with the following legend:

Limited Rights

Contract No. _____

Contractor Name _____

Contractor Address _____

_____

The Government's rights to use, modify, reproduce, release, perform, display, or disclose these technical data are restricted by paragraph (b)(3) of the Rights in Technical Data--Noncommercial Items clause contained in the above identified contract. Any reproduction of technical data or portions thereof marked with this legend must also reproduce the markings. Any person, other than the Government, who has been provided access to such data must promptly notify the above named Contractor.

(End of legend)

(4) Special license rights markings. (i) Data in which the Government's rights stem from a specifically negotiated license shall be marked with the following legend:

Special License Rights

The Government's rights to use, modify, reproduce, release, perform, display, or disclose these data are restricted by Contract No. _____ (Insert contract number) _____, License No. _____ (Insert license identifier) _____. Any reproduction of technical data or portions thereof marked with this legend must also reproduce the markings.

(End of legend)

(ii) For purposes of this clause, special licenses do not include government purpose license rights acquired under a prior contract (see paragraph (b)(5) of this clause).

(5) Pre-existing data markings. If the terms of a prior contract or license permitted the Contractor to restrict the Government's rights to use, modify, reproduce, release, perform, display, or disclose technical data deliverable under this contract, and those restrictions are still applicable, the Contractor may mark such data with the appropriate restrictive legend for which the data qualified under the prior contract or license. The marking procedures in paragraph (f)(1) of this clause shall be followed.

(g) Contractor procedures and records. Throughout performance of this contract, the Contractor and its subcontractors or suppliersthat will deliver technical data with other than unlimited rights, shall--

(1) Have, maintain, and follow written procedures sufficient to assure that restrictive markings are used only when authorized by the terms of this clause; and

(2) Maintain records sufficient to justify the validity of any restrictive markings on technical data delivered under this contract.

(h) Removal of unjustified and nonconforming markings. (1) Unjustified technical data markings. The rights and obligations of the parties regarding the validation of restrictive markings on technical data furnished or to be furnished under this contract are contained in the Validation of Restrictive Markings on Technical Data clause of this contract. Notwithstanding any provision of this contract concerning inspection and acceptance, the Government may ignore or, at the Contractor's expense, correct or strike a marking if, in accordance with the procedures in the Validation of Restrictive Markings on Technical Data clause of this contract, a restrictive marking is determined to be unjustified.

(2) Nonconforming technical data markings. A nonconforming marking is a marking placed on technical data delivered or otherwise furnished to the Government under this contract that is not in the format authorized by this contract. Correction of nonconforming markings is not subject to the validation of Restrictive Markings on Technical Data clause of this contract. If the Contracting Officer notifies the Contractor of a nonconforming marking and the Contractor fails to remove or correct such marking within sixty (60) days, the Government may ignore or, at the Contractor's expense, remove or correct any nonconforming marking.

(i) Relation to patents. Nothing contained in this clause shall imply a license to the Government under any patent or be construed as affecting the scope of any license or other right otherwise granted to the Government under any patent.

(j) Limitation on charges for rights in technical data. (1) The Contractor shall not charge to this contract any cost, including, but not limited to, license fees, royalties, or similar charges, for rights in technical data to be delivered under this contract when--

(i) The Government has acquired, by any means, the same or greater rights in the data; or

(ii) The data are available to the public without restrictions.

(2) The limitation in paragraph (j)(1) of this clause--

(i) Includes costs charged by a subcontractor or supplier, at any tier, or costs incurred by the Contractor to acquire rights in subcontractor or supplier technical data, if the subcontractor or supplier has been paid for such rights under any other Government contract or under a license conveying the rights to the Government; and

(ii) Does not include the reasonable costs of reproducing, handling, or mailing the documents or other media in which the technical data will be delivered.

(k) Applicability to subcontractors or suppliers. (1) The Contractor shall ensure that the rights afforded its subcontractors and suppliers under 10 U.S.C. 2320, 10 U.S.C. 2321, and the identification, assertion, and delivery processes of paragraph (e) of this clause are recognized and protected.

(2) Whenever any technical data for noncommercial items is to be obtained from a subcontractor or supplier for delivery to the Government under this contract, the Contractor shall use this same clause in the subcontract or other contractual instrument, and require its subcontractors or suppliers to do so, without alteration, except to identify the parties. No other clause shall be used to enlarge or diminish the Government's, the Contractor's, or a higher-tier subcontractor's or supplier's rights in a subcontractor's or supplier's technical data.

(3) Technical data required to be delivered by a subcontractor or supplier shall normally be delivered to the next higher-tier contractor, subcontractor, or supplier. However, when there is a requirement in the prime contract for data which may be submitted with other than unlimited rights by a subcontractor or supplier, then said subcontractor or supplier may fulfill its requirement by submitting such data directly to the Government, rather than through a higher-tier contractor, subcontractor, or supplier.

(4) The Contractor and higher-tier subcontractors or suppliers shall not use their power to award contracts as economic leverage to obtain rights in technical data from their subcontractors or suppliers. (5) In no event shall the Contractor use its obligation to recognize and protect subcontractor or supplier rights in technical data as an excuse for failing to satisfy its contractual obligations to the Government.

(End of clause)

252.229-7001 TAX RELIEF (JUN 1997)

(a) Prices set forth in this contract are exclusive of all taxes and duties from which the United States Government is exempt by virtue of tax agreements between the United States Government and the Contractor's government. The following taxes or duties have been excluded from the contract price:

NAME OF TAX: (Offeror Insert) RATE (PERCENTAGE): (Offeror Insert)

(b) The Contractor's invoice shall list separately the gross price, amount of tax deducted, and net price charged.

(c) When items manufactured to United States Government specifications are being acquired, the Contractor shall identify the materials or components intended to be imported in order to ensure that relief from import duties is obtained. If the Contractor intends to use imported products from inventories on hand, the price of which includes a factor for import duties, the Contractor shall ensure the United States Government's exemption from these taxes. The Contractor may obtain a refund of the import duties from its government or request the duty-free import of an amount of supplies or components corresponding to that used from inventory for this contract.

(End of clause)

252.236-7001 CONTRACT DRAWINGS AND SPECIFICATIONS (AUG 2000)

(a) The Government will provide to the Contractor, without charge, one set of contract drawings and specifications, except publications incorporated into the technical provisions by reference, in electronic or paper media as chosen by the Contracting Officer.

(b) The Contractor shall--

(1) Check all drawings furnished immediately upon receipt;

(2) Compare all drawings and verify the figures before laying out the work;

(3) Promptly notify the Contracting Officer of any discrepancies;

(4) Be responsible for any errors that might have been avoided by complying with this paragraph (b); and

(5) Reproduce and print contract drawings and specifications as needed.

(c) In general--

(1) Large-scale drawings shall govern small-scale drawings; and

(2) The Contractor shall follow figures marked on drawings in preference to scale measurements.

(d) Omissions from the drawings or specifications or the misdescription of details of work that are manifestly necessary to carry out the intent of the drawings and specifications, or that are customarily performed, shall not relieve the Contractor from performing such omitted or misdescribed details of the work. The Contractor shall perform such details as if fully and correctly set forth and described in the drawings and specifications.

(e) The work shall conform to the specifications and the contract drawings identified on the following index of drawings:

| | |
|---|---|
| Attachment 1 | ANP 1 Story District HQs Drawings- 1. |
| Attachment 2 | ANP 1 Story District HQs Drawings - 2 |
| Attachment 3 | ANP 1 Story District HQs Drawings- 3 |
| Attachment 4 | ANP 1 Story District HQs Drawings - 4 |
| Attachment 5 | AED Design Requirements - Sanitary Sewer and Septic Systems |

(End of clause)

Section 00800 - Special Contract Requirements

CLAUSES INCORPORATED BY FULL TEXT

252.225-7040 CONTRACTOR PERSONNEL AUTHORIZED TO ACCOMPANY U.S. ARMED FORCES DEPLOYED OUTSIDE THE UNITED STATES (JUL 2009)

(a) Definitions. As used in this clause--Combatant Commander means the commander of a unified or specified combatant command established in accordance with 10 U.S.C. 161.

Designated operational area means a geographic area designated by the combatant commander or subordinate joint force commander for the conduct or support of specified military operations.

Law of war means that part of international law that regulates the conduct of armed hostilities. The law of war encompasses all international law for the conduct of hostilities binding on the United States or its individual citizens, including treaties and international agreements to which the United States is a party, and applicable customary international law.

Subordinate joint force commander means a sub-unified commander or joint task force commander.

(b) General.

(1) This clause applies when Contractor personnel are authorized to accompany U.S. Armed Forces deployed outside the United States in--

(i) Contingency operations;

(ii) Humanitarian or peacekeeping operations; or

(iii) Other military operations or military exercises, when designated by the Combatant Commander.

(2) Contract performance in support of U.S. Armed Forces deployed outside the United States may require work in dangerous or austere conditions. Except as otherwise provided in the contract, the Contractor accepts the risks associated with required contract performance in such operations.

(3) Contractor personnel are civilians accompanying the U.S. Armed Forces.

(i) Except as provided in paragraph (b)(3)(ii) of this clause, Contractor personnel are only authorized to use deadly force in self-defense.

(ii) Contractor personnel performing security functions are also authorized to use deadly force when such force reasonably appears necessary to execute their security mission to protect assets/persons, consistent with the terms and conditions contained in their contract or with their job description and terms of employment.

(iii) Unless immune from host nation jurisdiction by virtue of an international agreement or international law, inappropriate use of force by contractor personnel authorized to accompany the U.S. Armed Forces can subject such personnel to United States or host nation prosecution and civil liability (see paragraphs (d) and (j)(3) of this clause).

(4) Service performed by Contractor personnel subject to this clause is not active duty or service under 38 U.S.C. 106 note.

(c) Support. (1)(i) The Combatant Commander will develop a security plan for protection of Contractor personnel in locations where there is not sufficient or legitimate civil authority, when the Combatant Commander decides it is in the interests of the Government to provide security because--

(A) The Contractor cannot obtain effective security services;

(B) Effective security services are unavailable at a reasonable cost; or

(C) Threat conditions necessitate security through military means.

(ii) The Contracting Officer shall include in the contract the level of protection to be provided to Contractor personnel.

(iii) In appropriate cases, the Combatant Commander may provide security through military means, commensurate with the level of security provided DoD civilians.

(2)(i) Generally, all Contractor personnel authorized to accompany the U.S. Armed Forces in the designated operational area are authorized to receive resuscitative care, stabilization, hospitalization at level III military treatment facilities, and assistance with patient movement in emergencies where loss of life, limb, or eyesight could occur. Hospitalization will be limited to stabilization and short-term medical treatment with an emphasis on return to duty or placement in the patient movement system.

(ii) When the Government provides medical treatment or transportation of Contractor personnel to a selected civilian facility, the Contractor shall ensure that the Government is reimbursed for any costs associated with such treatment or transportation.

(iii) Medical or dental care beyond this standard is not authorized unless specified elsewhere in this contract.

(3) Unless specified elsewhere in this contract, the Contractor is responsible for all other support required for its personnel engaged in the designated operational area under this contract.

(4) Contractor personnel must have a letter of authorization issued by the Contracting Officer in order to process through a deployment center or to travel to, from, or within the designated operational area. The letter of authorization also will identify any additional authorizations, privileges, or Government support that Contractor personnel are entitled to under this contract.

(d) Compliance with laws and regulations. (1) The Contractor shall comply with, and shall ensure that its personnel authorized to accompany U.S. Armed Forces deployed outside the United States as specified in paragraph (b)(1) of this clause are familiar with and comply with, all applicable--

(i) United States, host country, and third country national laws;

(ii) Provisions of the law of war, as well as any other applicable treaties and international agreements;

(iii) United States regulations, directives, instructions, policies, and procedures; and

(iv) Orders, directives, and instructions issued by the Combatant Commander, including those relating to force protection, security, health, safety, or relations and interaction with local nationals.

(2) The Contractor shall institute and implement an effective program to prevent violations of the law of war by its employees and subcontractors, including law of war training in accordance with paragraph (e)(1)(vii) of this clause.

(e) Pre-deployment requirements.

(1) The Contractor shall ensure that the following requirements are met prior to deploying personnel authorized to accompany U.S. Armed Forces. Specific requirements for each category may be specified in the statement of work or elsewhere in the contract.

(i) All required security and background checks are complete and acceptable.

(ii) All deploying personnel meet the minimum medical screening requirements and have received all required immunizations as specified in the contract. The Government will provide, at no cost to the Contractor, any theater-specific immunizations and/or medications not available to the general public.

(iii) Deploying personnel have all necessary passports, visas, and other documents required to enter and exit a designated operational area and have a Geneva Conventions identification card, or other appropriate DoD identity credential, from the deployment center. Any Common Access Card issued to deploying personnel shall contain the access permissions allowed by the letter of authorization issued in accordance with paragraph (c)(4) of this clause.

(iv) Special area, country, and theater clearance is obtained for personnel. Clearance requirements are in DoD Directive 4500.54, Official Temporary Duty Abroad, and DoD 4500.54-G, DoD Foreign Clearance Guide. Contractor personnel are considered non-DoD personnel traveling under DoD sponsorship.

(v) All personnel have received personal security training. At a minimum, the training shall--

(A) Cover safety and security issues facing employees overseas;

(B) Identify safety and security contingency planning activities; and

(C) Identify ways to utilize safety and security personnel and other resources appropriately.

(vi) All personnel have received isolated personnel training, if specified in the contract, in accordance with DoD Instruction 1300.23, Isolated Personnel Training for DoD Civilian and Contractors.

(vii) Personnel have received law of war training as follows:

(A) Basic training is required for all Contractor personnel authorized to accompany U.S. Armed Forces deployed outside the United States. The basic training will be provided through--

(1) A military-run training center; or

(2) A Web-based source, if specified in the contract or approved by the Contracting Officer.

(B) Advanced training, commensurate with their duties and responsibilities, may be required for some Contractor personnel as specified in the contract.

(2) The Contractor shall notify all personnel who are not a host country national, or who are not ordinarily resident in the host country, that--

(i) Such employees, and dependents residing with such employees, who engage in conduct outside the United States that would constitute an offense punishable by imprisonment for more than one year if the conduct had been engaged in within the special maritime and territorial jurisdiction of the United States, may potentially be subject to the criminal jurisdiction of the United States in accordance with the Military Extraterritorial Jurisdiction Act of 2000 (18 U.S.C. 3621, et seq.);

(ii) Pursuant to the War Crimes Act (18 U.S.C. 2441), Federal criminal jurisdiction also extends to conduct that is determined to constitute a war crime when committed by a civilian national of the United States;

(iii) Other laws may provide for prosecution of U.S. nationals who commit offenses on the premises of U.S. diplomatic, consular, military or other U.S. Government missions outside the United States (18 U.S.C. 7(9)); and

(iv) In time of declared war or a contingency operation, Contractor personnel authorized to accompany U.S. Armed Forces in the field are subject to the jurisdiction of the Uniform Code of Military Justice under 10 U.S.C. 802(a)(10).

(f) Processing and departure points. Deployed Contractor personnel shall--

(1) Process through the deployment center designated in the contract, or as otherwise directed by the Contracting Officer, prior to deploying. The deployment center will conduct deployment processing to ensure visibility and accountability of Contractor personnel and to ensure that all deployment requirements are met, including the requirements specified in paragraph (e)(1) of this clause;

(2) Use the point of departure and transportation mode directed by the Contracting Officer; and

(3) Process through a Joint Reception Center (JRC) upon arrival at the deployed location. The JRC will validate personnel accountability, ensure that specific designated operational area entrance requirements are met, and brief Contractor personnel on theater-specific policies and procedures.

(g) Personnel data.

(1) The Contractor shall enter before deployment and maintain data for all Contractor personnel that are authorized to accompany U.S. Armed Forces deployed outside the United States as specified in paragraph (b)(1) of this clause. The Contractor shall use the Synchronized Predeployment and Operational Tracker (SPOT) web-based system, at http://www.dod.mil/bta/products/spot.html, to enter and maintain the data.

(2) The Contractor shall ensure that all employees in the database have a current DD Form 93, Record of Emergency Data Card, on file with both the Contractor and the designated Government official. The Contracting Officer will inform the Contractor of the Government official designated to receive this data card.

(h) Contractor personnel.

(1) The Contracting Officer may direct the Contractor, at its own expense, to remove and replace any Contractor personnel who jeopardize or interfere with mission accomplishment or who fail to comply with or violate applicable requirements of this contract. Such action may be taken at the Government's discretion without prejudice to its rights under any other provision of this contract, including the Termination for Default clause.

(2) The Contractor shall have a plan on file showing how the Contractor would replace employees who are unavailable for deployment or who need to be replaced during deployment. The Contractor shall keep this plan current and shall provide a copy to the Contracting Officer upon request. The plan shall--

(i) Identify all personnel who are subject to military mobilization;

(ii) Detail how the position would be filled if the individual were mobilized; and

(iii) Identify all personnel who occupy a position that the Contracting Officer has designated as mission essential.

(3) Contractor personnel shall report to the Combatant Commander or a designee, or through other channels such as the military police, a judge advocate, or an inspector general, any suspected or alleged conduct for which there is credible information that such conduct--

(i) Constitutes violation of the law of war; or

(ii) Occurred during any other military operations and would constitute a violation of the law of war if it occurred during an armed conflict.

(i) Military clothing and protective equipment.

(1) Contractor personnel are prohibited from wearing military clothing unless specifically authorized in writing by the Combatant Commander. If authorized to wear military clothing, Contractor personnel must--

(i) Wear distinctive patches, arm bands, nametags, or headgear, in order to be distinguishable from military personnel, consistent with force protection measures; and

(ii) Carry the written authorization with them at all times.

(2) Contractor personnel may wear military-unique organizational clothing and individual equipment (OCIE) required for safety and security, such as ballistic, nuclear, biological, or chemical protective equipment.

(3) The deployment center, or the Combatant Commander, shall issue OCIE and shall provide training, if necessary, to ensure the safety and security of Contractor personnel.

(4) The Contractor shall ensure that all issued OCIE is returned to the point of issue, unless otherwise directed by the Contracting Officer.

(j) Weapons.

(1) If the Contractor requests that its personnel performing in the designated operational area be authorized to carry weapons, the request shall be made through the Contracting Officer to the Combatant Commander, in accordance with DoD Instruction 3020.41, paragraph 6.3.4.1 or, if the contract is for security services, paragraph 6.3.5.3. The Combatant Commander will determine whether to authorize in-theater Contractor personnel to carry weapons and what weapons and ammunition will be allowed.

(2) If the Contracting Officer, subject to the approval of the Combatant Commander, authorizes the carrying of weapons--

(i) The Contracting Officer may authorize the Contractor to issue Contractor-owned weapons and ammunition to specified employees; or

(ii) The Contracting Officer's Representative, or other person designated by the Contracting Officer may issue Government-furnished weapons and ammunition to the Contractor for issuance to specified Contractor employees.

(3) The Contractor shall ensure that its personnel who are authorized to carry weapons--

(i) Are adequately trained to carry and use them--

(A) Safely;

(B) With full understanding of, and adherence to, the rules of the use of force issued by the Combatant Commander; and

(C) In compliance with applicable agency policies, agreements, rules, regulations, and other applicable law;

(ii) Are not barred from possession of a firearm by 18 U.S.C. 922; and

(iii) Adhere to all guidance and orders issued by the Combatant Commander regarding possession, use, safety, and accountability of weapons and ammunition.

(4) Whether or not weapons are Government-furnished, all liability for the use of any weapon by Contractor personnel rests solely with the Contractor and the Contractor employee using such weapon.

(5) Upon redeployment or revocation by the Combatant Commander of the Contractor's authorization to issue firearms, the Contractor shall ensure that all Government-issued weapons and unexpended ammunition are returned as directed by the Contracting Officer.

(k) Vehicle or equipment licenses. Contractor personnel shall possess the required licenses to operate all vehicles or equipment necessary to perform the contract in the designated operational area.

(l) Purchase of scarce goods and services. If the Combatant Commander has established an organization for the designated operational area whose function is to determine that certain items are scarce goods or services, the Contractor shall coordinate with that organization local purchases of goods and services designated as scarce, in accordance with instructions provided by the Contracting Officer.

(m) Evacuation.

(1) If the Combatant Commander orders a mandatory evacuation of some or all personnel, the Government will provide assistance, to the extent available, to United States and third country national Contractor personnel.

(2) In the event of a non-mandatory evacuation order, unless authorized in writing by the Contracting Officer, the Contractor shall maintain personnel on location sufficient to meet obligations under this contract.

(n) Next of kin notification and personnel recovery.

(1) The Contractor shall be responsible for notification of the employee-designated next of kin in the event an employee dies, requires evacuation due to an injury, or is isolated, missing, detained, captured, or abducted.

(2) In the case of isolated, missing, detained, captured, or abducted Contractor personnel, the Government will assist in personnel recovery actions in accordance with DoD Directive 3002.01E, Personnel Recovery in the Department of Defense.

(o) Mortuary affairs. Mortuary affairs for Contractor personnel who die while accompanying the U.S. Armed Forces will be handled in accordance with DoD Directive 1300.22, Mortuary Affairs Policy.

(p) Changes. In addition to the changes otherwise authorized by the Changes clause of this contract, the Contracting Officer may, at any time, by written order identified as a change order, make changes in the place of performance or Government-furnished facilities, equipment, material, services, or site. Any change order issued in accordance with this paragraph (p) shall be subject to the provisions of the Changes clause of this contract.

(q) Subcontracts. The Contractor shall incorporate the substance of this clause, including this paragraph (q), in all subcontracts when subcontractor personnel are authorized to accompany U.S. Armed Forces deployed outside the United States in--

(1) Contingency operations;

(2) Humanitarian or peacekeeping operations; or

(3) Other military operations or military exercises, when designated by the Combatant Commander.

(End of clause)

JCC I/A CLAUSES

**JCC-I/A CLAUSE 952.222-0001**
**PROHIBITION AGAINST HUMAN TRAFFICKING, INHUMANE LIVING CONDITIONS, AND WITHHOLDING OF EMPLOYEE PASSPORTS**
**(MAR 2009)**

(a) All contractors ("contractors" refers to both prime contractors and all subcontractors at all tiers) are reminded of the prohibition contained in Title 18, United States Code, Section 1592, against knowingly destroying, concealing, removing, confiscating, or possessing any actual or purported passport or other immigration document, or any other actual or purported government identification document, of another

person, to prevent or restrict or to attempt to prevent or restrict, without lawful authority, the person's liberty to move or travel, in order to maintain the labor or services of that person, when the person is or has been a victim of a severe form of trafficking in persons.

(b) Contractors are also required to comply with the following provisions:

(1) Contractors shall only hold employee passports and other identification documents discussed above for the shortest period of time reasonable for administrative processing purposes.

(2) Contractors shall provide all employees with a signed copy of their employment contract, in English as well as the employee's native language that defines the terms of their employment/compensation.

(3) Contractors shall not utilize unlicensed recruiting firms, or firms that charge illegal recruiting fees.

(4) Contractors shall be required to provide adequate living conditions (sanitation, health, safety, living space) for their employees. Fifty square feet is the minimum acceptable square footage of personal living space per employee. Upon contractor's written request, contracting officers may grant a waiver in writing in cases where the existing square footage is within 20% of the minimum, and the overall conditions are determined by the contracting officer to be acceptable. A copy of the waiver approval shall be maintained at the respective life support area.

(5) Contractors shall incorporate checks of life support areas to ensure compliance with the requirements of this Trafficking in Persons Prohibition into their Quality Control program, which will be reviewed within the Government's Quality Assurance process.

(6) Contractors shall comply with international laws regarding transit/exit/entry procedures, and the requirements for work visas. Contractors shall follow all Host Country entry and exit requirements.
(c) Contractors have an affirmative duty to advise the Contracting Officer if they learn of their employees violating the human trafficking and inhumane living conditions provisions contained herein. Contractors are advised that contracting officers and/or their representatives will conduct random checks to ensure contractors and subcontractors at all tiers are adhering to the law on human trafficking, humane living conditions and withholding of passports.

(d) The contractor agrees to incorporate the substance of this clause, including this paragraph, in all subcontracts under his contract.

(End)

**JCC-I/A CLAUSE 952.223-0001**
**REPORTING KIDNAPPINGS, SERIOUS INJURIES AND DEATHS**
**(MAR 2009)**

Contractors shall notify the Contracting Officer, as soon as practicable, whenever employee kidnappings, serious injuries or deaths occur.
Report the following information:
Contract Number
Contract Description & Location
Company Name
Reporting party:
Name
Phone number

e-mail address
Victim:
Name
Gender (Male/Female)
Age
Nationality
Country of permanent residence
Incident:
Description
Location
Date and time
Other Pertinent Information

(End)

**JCC-I/A CLAUSE 952.225-0002**
**ARMED PERSONNEL INCIDENT REPORTS**
**(MAR 2009)**

(a) All contractors and subcontractors in the Multi-National Forces-Iraq (MNF-I) or Combined Joint Task Force (Afghanistan) theater of operations shall comply with and shall ensure that their personnel supporting MNF-I or CJTF forces are familiar with and comply with all applicable orders, directives, and instructions issued by the respective MNF-I or CJTF Commanders relating to force protection and safety.

(b) **IRAQ**: Contractors shall provide all incidents and use of weapons firing incidents to the MNC-I Contractor Operations Cell (CONOC) as soon as practical, based upon the situation, and submit a written report to CONOC within 4 hours. The initial report shall include the name of the company, location of the incident, time when the incident occurred, a brief description of the events leading up to the incident, and a company point of contact. A follow-up, comprehensive written report shall be provided to the CONOC
within 96 hours of the incident. Reports shall be submitted to CONOC at:
mncic3conoc@iraq.centcom.mil;, DSN 318-435-2369; Iraqna 0044 203 286 9851 or 0044 203 239 5894; or Skype: MNCICONOC.

(c) **AFGHANISTAN**: Contractors shall report all incidents and use of weapons through their Contracting Officers who will notify the JOC Watch at Bagram AB. (JOC SHIFT DIRECTOR, DSN: 318-431-4116; SVOIP: 431-7108) Information should include: the name of the company, where the incident occurred, time when the incident occurred, a brief description of the events leading up to the incident, and a point of contact for the company. The JOC Watch duty officer will issue guidance for further reporting
requirements.

(d) Contractors shall provide first aid and request MEDEVAC of injured persons, and remain available for U.S. or Coalition response forces, based upon the situation. In the event contractor personnel are detained by U.S. or Coalition Forces, prolonged detention due to lack of proper identification can be alleviated by contractor personnel possessing on their person information that includes the contractor's name, the contract number, a contractor management POC, and the phone number of the CONOC/JOC Watch.

(END)

**JCC-I/A CLAUSE 952.225-0003**
**FITNESS FOR DUTY AND MEDICAL/DENTAL CARE LIMITATIONS**
**(MAR 2009)**

(1) The contractor shall perform the requirements of this contract notwithstanding the fitness for duty of deployed employees, the provisions for care offered under this section, and redeployment of individuals determined to be unfit. The contractor bears the responsibility for ensuring all employees are aware of the conditions and medical treatment available at the performance. The contractor shall include this information and requirement in all subcontracts with performance in the theater of operations.

(2) The contractor shall not deploy an individual with any of the following conditions unless approved by the appropriate CENTCOM Service Component (ie. ARCENT, AFCENT, etc.) Surgeon: Conditions which prevent the wear of personal protective equipment, including protective mask, ballistic helmet, body armor, and chemical/biological protective garments; conditions which prohibit required theater immunizations or medications; conditions or current medical treatment or medications that contraindicate or preclude the use of chemical and biological protectives and antidotes; diabetes mellitus, Type I or II, on pharmacological therapy; symptomatic coronary artery disease, or with myocardial infarction within one year prior to deployment, or within six months of coronary artery bypass graft, coronary artery
angioplasty, or stenting; morbid obesity (BMI >/= 40); dysrhythmias or arrhythmias, either symptomatic or requiring medical or electrophysiologic control; uncontrolled hypertension, current heart failure, or automatic implantable defibrillator; therapeutic anticoagulation; malignancy, newly diagnosed or under current treatment, or recently diagnosed/treated and requiring frequent subspecialist surveillance, examination, and/or laboratory testing; dental or oral conditions requiring or likely to require urgent dental care within six months' time, active orthodontic care, conditions requiring prosthodontic care, conditions with immediate restorative dentistry needs, conditions with a current requirement for oral-maxillofacial surgery; new onset (< 1 year) seizure disorder, or seizure within one year prior to deployment; history of heat stroke; Meniere's Disease or other vertiginous/motion sickness disorder, unless well controlled on medications available in theater; recurrent syncope, ataxias, new diagnosis (< 1year) of mood disorder, thought disorder, anxiety, somotoform, or dissociative disorder, or personality disorder with mood or thought manifestations; unrepaired hernia; tracheostomy or aphonia; renalithiasis, current; active tuberculosis; pregnancy; unclosed surgical defect, such as external fixeter placement; requirement for medical devices using AC power; HIV antibody positivity; psychotic and bipolar disorders. (Reference: Mod 8 to USCENTCOM Individual Protection and Individual/Unit Deployment Policy, PPG-Tab A: Amplification of the Minimal Standards of Fitness for Deployment to the CENTCOM AOR).

(3) In accordance with military directives (DoDI 3020.41, DoDI 6000.11, CFC FRAGO 09-1038, DoD PGI 225.74), resuscitative care, stabilization, hospitalization at Level III (emergency) military treatment facilities and assistance with patient movement in emergencies where loss of life, limb or eyesight could occur will be provided. Hospitalization will be limited to emergency stabilization and short-term medical
treatment with an emphasis on return to duty or placement in the patient movement system. Subject to availability at the time of need, a medical treatment facility may provide reimbursable treatment for emergency medical or dental care such as broken bones, lacerations, broken teeth or lost fillings.

**(4) Routine and primary medical care is not authorized. Pharmaceutical services are not authorized for routine or known, routine prescription drug needs of the individual. Routine dental care, examinations and cleanings are not authorized.**

(5) Notwithstanding any other provision of the contract, the contractor shall be liable for any and all medically-related services or transportation rendered. In accordance with OUSD(C) Memorandum dated 4 June 2008, the following reimbursement rates will be charged for services at all DoD deployed medical facilities. These rates are in effect until changed by DoD direction.

(a) Inpatient daily rate: $2,041.00. Date of discharge is not billed unless the patient is admitted to the hospital and discharged the same day.

(b) Outpatient visit rate: $195.00. This includes diagnostic imaging, laboratory, pathology, and pharmacy provided at the medical facility.

(END)

**JCC-I/A CLAUSE 952.225-0004**
**COMPLIANCE WITH LAWS AND REGULATIONS**
**(MAR 2009)**

(a) The Contractor shall comply with, and shall ensure that its employees and its subcontractors and their employees, at all tiers, are aware of and obey all U.S. and Host Nation laws, Federal or DoD regulations, and Central Command orders and directives applicable to personnel in Iraq and Afghanistan, including but not limited to USCENTCOM, Multi-National Force and Multi-National Corps operations and fragmentary orders, instructions, policies and directives.

(b) Contractor employees shall particularly note all laws, regulations, policies, and orders restricting authority to carry firearms, rules for the use of force, and prohibiting sexual or aggravated assault. Contractor employees are subject to General Orders Number 1, as modified from time to time, including without limitation, their prohibition on privately owned firearms, alcohol, drugs, war souvenirs, pornography and photographing detainees, human casualties or military security measures.

(c) Contractor employees may be ordered removed from secure military installations or the theater of operations by order of the senior military commander of the battle space for acts that disrupt good order and discipline or violate applicable laws, regulations, orders, instructions, policies, or directives. Contractors shall immediately comply with any such order to remove its contractor employee.

(d) Contractor employees performing in the USCENTCOM Area of Operations (AOR) may be subject to the jurisdiction of overlapping criminal codes, including, but not limited to, the Military Extraterritorial Jurisdiction Act (18 U.S.C. Sec. 3261, et al) (MEJA), the Uniform Code of Military Justice (10 U.S.C. Sec. 801, et al)(UCMJ), and the laws of the Host Nation. Non-US citizens may also be subject to the laws of their home country while performing in the USCENTCOM AOR. Contractor employee status in these overlapping criminal jurisdictions may be modified from time to time by the United States, the Host Nation, or by applicable status of forces agreements.

(e) Under MEJA, a person who engages in felony misconduct outside the United States while employed by or accompanying the Armed Forces is subject to arrest, removal and prosecution in United States federal courts. Under the UCMJ, a person serving with or accompanying the Armed Forces in the field during a declared war or contingency operation may be disciplined for a criminal offense, including by referral of charges to a General Court Martial. Contractor employees may be ordered into confinement or placed under conditions that restrict movement within the AOR or administratively attached to a military command pending resolution of a criminal investigation.

(f) Contractors shall immediately notify military law enforcement and the Contracting Officer if they suspect an employee has committed an offense. Contractors shall take any and all reasonable and necessary measures to secure the presence of an employee suspected of a serious felony offense. Contractors shall not knowingly facilitate the departure of an employee suspected of a serious felony offense or violating the Rules for the Use of Force to depart Iraq or Afghanistan without approval from the senior U.S. commander in the country.

(End)

**JCC-I/A CLAUSE 952.225-0005**
**MONTHLY CONTRACTOR CENSUS REPORTING**
**(MAR 2009)**

Contractor shall provide monthly employee census information to the Contracting Officer, by province, for this contract. Information shall be submitted either electronically or by hard-copy. Information shall be current as of the 25th day of each month and received by the Contracting Officer no later than the first day of the following month. The following information shall be provided for each province in which work was performed:

(1) The total number (prime and subcontractors at all tiers) employees.
(2) The total number (prime and subcontractors at all tiers) of U.S. citizens.
(3) The total number (prime and subcontractors at all tiers) of local nationals (LN).
(4) The total number (prime and subcontractors at all tiers) of third-country nationals (TCN).
(5) Name of province in which the work was performed.
(6) The names of all company employees who enter and update employee data in the Synchronized Predeployment & Operational Tracker (SPOT) IAW DFARS 252.225-7040 or DFARS DOD class deviation 2007-O0010.

(END)

**JCC-I/A CLAUSE 952.225-0009**
**MEDICAL SCREENING AND VACCINATION REQUIREMENTS**
**FOR LOCALLY HIRED EMPLOYEES**
**(MAR 2009)**

(a) Contractors, and subcontractors at any tier shall ensure and provide satisfactory evidence that all locally hired employees, including Local National (LN), Third Country National, and U.S. employees, working on military have been screened for and do not currently have active tuberculosis (TB).

(1) Contractors may utilize a testing method of either a chest x-ray or TB skin test (TST).
(i) Chest x-rays shall be taken and TBTs administered within 90 days prior to the start of employment.
(ii) Screening may be performed either by a licensed medical provider from the local economy or by contractors' licensed medical staffs. Contractors shall maintain medical screening documentation and make it available to the Contracting Officer upon request.

(2) TB screening documentation will be required by the responsible Base Defense Operations Center (BDOC) prior to issuance of base access badges.

(b) Contractor employees, including subcontractors at any tier, who work in positions where they are working with food or water production and distribution shall have current Typhoid and Hepatitis "A" (full series) vaccinations, in addition to the TB tests required above.
(a) At least the first inoculation in the Hepatitis "A" series must be given prior to the start of employment, with continuation and completion of the inoculation series. The Typhoid inoculation must be completed within two years prior to the date of employment in the food and water service capacity.
(i) Once the complete Hepatitis "A" vaccination series is completed, it does not have to be repeated. The Typhoid vaccination requires a booster immunization every three years.
(ii) Proof of individual employee vaccinations shall be provided to the Contracting Officer and maintained by the Contractor for examination by the Contracting Officer.

**JCC-I/A CLAUSE 952.225-0001**
**ARMING REQUIREMENTS AND PROCEDURES FOR PERSONAL SECURITY SERVICES CONTRACTORS AND FOR REQUESTS FOR PERSONAL PROTECTION**
**(MAR 2009)**

***General.*** Contractor and its subcontractors at all tiers that require arming under this contract agree to obey all laws, regulations, orders, and directives applicable to the use of private security personnel in Iraq and Afghanistan, including U.S. CENTCOM, Multi-National Force Commander and Multi-National Corps Commander orders, instructions and directives. Contractors will ensure that all employees, including employees at any tier of subcontracting relationships, armed under the provisions of this contract, comply with the contents of this clause and with the requirements set forth in the following:
DODI 3020.41, *Program Management for Acquisition and Operational Contract Support in Contingency Operations*;
DFARS 252.225-7040, *Contractor Personnel Supporting a Force Deployed Outside the United States*;
Class Deviation 2007-O0010, Contractor Personnel in the United States Central Command Area of Responsibility
CPA Order #17, *Registration Requirements for Private Security Companies*, dated 27 Jun 04;
U.S. CENTCOM Policy Letter, Mod 1, *Personal Protection and Contract Security Service Arming*, dated 7 Nov 2006

***Required Government Documentation.*** The unit requesting the contractor security shall provide a description of the following to the arming approval authority and to the contracting officer:
The specific location where the PSC will operate;
The persons and/or property that require protection;
The anticipated threat;
The required weapon types; and
The reason current security/police forces are inadequate.

***Required Contractor Documentation***. Contractors and their subcontractors at all tiers that require arming approval shall provide the following to the contracting officer representative (COR):

Documentation that each employee who will be armed under the contract received the following training—
Weapons Qualification/Familiarization. All employees must meet the qualification requirements established by any DoD or other U.S. government agency Law of Armed Conflict (LOAC);
Rules for the Use of Force (RUF), as defined in the U.S. CENTCOM Policy, dated 23 December 2005; and Distinction between the above-prescribed RUF and the Rules of Engagement (ROE), which are applicable only to military forces.

Completed DD Form 2760 (or equivalent documentation) for each armed employee, indicating that the employee is not otherwise prohibited under U.S. law from possessing the required weapon or ammunition.

One (1) copy of a business license from the Iraqi or Afghani Ministry of Trade or Interior;

One (1) copy of an operating license (or a temporary operating license) from the Ministry of Interior;

A communications plan that, at a minimum, sets forth the following:
The contractor's method of notifying military forces and requesting assistance where hostilities arise or combat action is needed;
How relevant threat information will be shared between contractor security personnel and U.S. military forces; and
How the contractor will coordinate transportation with appropriate military authorities.
An acceptable plan for accomplishing background checks on all contractor and subcontractor employees who will be armed under the contract. The contractor shall, at a minimum, perform the following (which will be specifically addressed in its plan and which will be documented and furnished to the COR upon completion):
Use one or more of the following sources when conducting the background checks:
Interpol, FBI, Country of Origin Criminal Records, Country of Origin U.S. Embassy
Information Request, CIA records, and/or any other records available;
Verify with MNC-I or Afghanistan RCE – CG Provost Marshal that no employee has
been barred by any commander within Iraq or Afghanistan; and
Certify, after completing all checks, that all persons armed under this contract are not
prohibited under U.S. law from possessing a weapon or ammunition.

***Required Contractor Acknowledgements***. Contractors and their subcontractors at all tiers that require arming approval will provide written acknowledgement of the following to the COR:
Penalties for Non-Compliance. Failure of contractor or subcontractor employee(s) to comply with the laws, regulations, orders, and rules (including those specified herein) governing the use of force may result in the revocation of weapons authorization for such employee(s). Where appropriate, such failure may also result in the total revocation of weapons authorization for the contractor (or subcontractor) and sanctions under the contract, including termination.
Criminal and Civil Liability. Arming of contractor or subcontractor employees under this contract may subject the contractor, its subcontractors, and persons employed by the same, to U.S. and Host Nation prosecution and civil liability. "Host Nation" refers to the nation or nations where services under this contract are performed.
Lapses in Training. Failure to successfully retrain an employee who is armed under this contract within twelve (12) months of the last training date will constitute a lapse in the employee's authorization to possess and carry the weapon. All unauthorized employees will immediately surrender their weapon to the contractor and will remain unarmed until such time as they are retrained and the COR determines that the retraining is sufficient.

***Authorized Weapon & Ammunition Types***. Unless DCDRUSCENTCOM (or a designee) provides otherwise, all arming requests and authorizations for contractor or subcontractor employees under this contract shall be limited to U.S. Government approved weapons and ammunition. This restriction applies to all weapons in the possession of contractor employees, even if such weapons are required for personal
protection. The following weapons and ammunition are currently authorized by the U.S. Government for use in Iraq and Afghanistan:
The M9, M4, M16, or equivalent (e.g. .45 CAL, AK-47).

The M9 or equivalent sidearm will be the standard personal protection weapon unless other weapons are specifically requested and approved.
U.S. government Ball ammunition is the standard approved ammunition.

***Requirements for Individual Weapons Possession***. All employees of the contractor and its subcontractors at all tiers who are armed under this contract must:
Possess only those U.S. Government-approved weapons and ammunition for which they are qualified under the training requirements of section (c);
Carry weapons only when on duty or at a specific post;
Not conceal any weapons, unless specifically authorized;
Carry proof of authorization to be armed. Employees not possessing such proof will be deemed unauthorized and must surrender their weapon to their employer; and
IAW USCENTCOM G.O. #1, consumption of alcohol in Iraq or Afghanistan is prohibited. In the event of a suspension or and exception to G.O. #1, employees shall not consume any alcoholic beverage while armed or within eight (8) hours of the next work period where they will be armed.

***Weapons/Equipment Restrictions and Responsibilities.*** Unless otherwise provided, the U.S. Government will not provide any weapons or ammunition to contractors, their subcontractors, or any employees of the same. The Contractor will provide all weapons and ammunition to those employees that will be armed under the contract. The contractor and its subcontractors at all tiers will also provide interceptor body armor, ballistic helmets, and the Nuclear, Biological, and Chemical (NBC) protective masks to those employees that require such equipment in the performance of their duties.

***Rules for the Use of Force (RUF).*** In addition to the RUF and ROE training referenced in paragraph (c), the contractor and its subcontractors at all tiers will monitor and report all activities of its armed employees that may violate the RUF. Prompt reporting demonstrates a desire by the contractor and its subcontractors to minimize the impact of any violations and, therefore, will be given favorable consideration. Violations of the RUF include, though are not limited to:
Taking a direct part in hostilities or combat actions, other than to exercise self-defense;
Failing to cooperate with Coalition and Host Nation forces;
Using deadly force, other than in self-defense where there is a reasonable belief of imminent risk of death or serious bodily harm;
Failing to use a graduated force approach;
Failing to treat the local civilians with humanity or respect; and
Detaining local civilians, other than in self-defense or as reflected in the contract terms.

***Retention and Review of Records***. The Contractor and all subcontractors at all tiers shall maintain records on weapons training, LOAC, RUF and the screening of employees for at least six (6) months following the expiration (or termination) of the contract. The Contractor and its subcontractors at all tiers shall make these records available to the Contracting Officer or designated representative, at no additional cost to the government, within 72 hours of a request.

***Contractor Vehicles.*** Vehicles used by contractor and subcontractor personnel in the course of their security duties shall not be painted or marked to resemble U.S./Coalition or host nation military and police force vehicles.
***Quarterly Reporting.*** The prime contractor will report quarterly (i.e. NLT 1 January, 1April, 1 July and 1 October for each quarter of the calendar year) to the Contracting Officer responsible for this contract, and any other organization designated by the Contracting Officer, the following information under this contract:
The total number of armed civilians and contractors;
The names and contact information of its subcontractors at all tiers; and

A general assessment of the threat conditions, adequacy of force numbers, and any problems that might require a change to force levels. Note: this information is in addition to the information the contractor promises to immediately provide under the communications plan referenced at paragraph (c)(5).

(END)

**JCC-I/A CLAUSE 952.236-0001**
**ELECTRICAL AND STRUCTURAL BUILDING STANDARDS FOR CONSTRUCTION PROJECTS**
**(MAR 2009)**

(a) The standards set forth herein are the minimum requirements for the contract. These standards must be followed unless a more stringent standard is specifically included. In such case the most stringent standard shall be required for contract acceptance.

(b) The contractor, in coordination with the Contracting Officer, Base Camp Mayor, Base/Unit Engineers, and requiring activity shall evaluate, upgrade, build, and/or refurbish buildings to a safe and livable condition. This work may include refurbishment, construction, alterations, and upgrades. All work shall be in accordance with accepted standards of quality.

(c) As dictated by the Unified Facilities Criteria (UFC) the contract shall meet:

(1) “the minimum requirements of United States’ National Fire Protection Association (NFPA) 70,
(2) National Electrical Code (NEC),
(3) the American National Standards Institute (ANSI) C2, and
(4) the United States’ National Electrical Safety Code (NESC).

(d) These standards must be met when it is reasonable to do so with available materials. When conditions dictate deviation, then provisions within the International Electrical Code (IEC) or British Standard (BS 7671) shall be followed. Any deviations from the above necessary to reflect market conditions, shall receive prior written approval from a qualified engineer and the Contracting Officer.
(e) The following internet links provide access to some of these standards:
UFC: http://65.204.17.188/report/doc_ufc.html
NFPA 70: http://www.nfpa.org
NESC: http://www.standards.ieee.org/nesc

(END)

**JCC-I/A CLAUSE 952.225-0010**
**CONTRACTOR EMPLOYEE LEGAL REQUIREMENTS**
**(MAR 2009)**

(a) The contractor shall not employ, nor allow a subcontractor to employ, any person that has ever been convicted, in any U.S. court, including a court-martial, of any crime against an Iraqi and/or an Afghan national, regardless of the place at which the crime occurred.

(b) For the purpose of this clause, "crime" is defined as: "a violation of a law in which there is injury to the public or a member of the public and a term in jail or prison, and/or a fine as possible penalties." Further, the crime must be an offense that could be classified as a Class B misdemeanor, or any higher class up to a Class A felony, as referenced at 18 USC §3559.

(c) Contractors shall exercise effective screening processes to ensure that individuals not conforming to this standard are identified and prohibited from, or removed from (if already employed) working under this contract.

(d) Contractor employees discovered to have one of more prior convictions as described above shall be removed from the contract at the contractor's expense.

(e) Failure to adhere to the requirements of this clause could result in a termination for cause or termination for default, in accordance with the terms and conditions of this contract.

(END)

**WORKERS COMPENSATION INSURANCE (DEFENSE BASE ACT) –CONSTRUCTION (OCT 2008)**

(a) This Special Contract Requirement supplements FAR Clause 52.228-3 Workers' Compensation Insurance (Defense Base Act).

(b) The contractor agrees to procure Defense Base Act (DBA) insurance pursuant to the terms of the contract between the U.S. Army Corps of Engineers (USACE) and **CNA Insurance** unless the contractor has a DBA self-insurance program approved by the Department of Labor. Proof of this self-insurance shall be provided to the Contracting Officer. The contractor shall submit proof of a valid DBA Insurance policy with CNA Insurance for the Prime and their Subcontractor's at every tier prior to performance of the contract. The current rate under the USACE and JCC-I/A contract is **$7.50 per $100 of compensation for construction.**

(c) The contractor agrees to insert a Special Contract Requirement substantially the same as this one in all subcontracts (at every tier) to which DBA is applicable.

(d) Should the rates for DBA insurance coverage increase or decrease during the performance of this contract, USACE shall modify the contract accordingly. However, the revised rates will not be applicable until the Contractor's or Subcontractor's DBA Insurance policy is due to be renewed.

(e) Premiums will be reimbursed only if coverage is purchased through the USACE mandatory requirements DBA contract administered by CNA Insurance and their Managing Broker, Rutherfoord International.

(f) Failure to comply and purchase Defense Base Act (DBA) Insurance in accordance with FAR Clauses 52.228-3 Workers' Compensation Insurance (Defense Base Act), from the U.S. Army Corps of Engineers mandatory Insurance Carrier/Broker (CNA Insurance/Rutherfoord International) for the Prime and all of the Subcontractors at every tier, shall be considered a material breach and could cause your contract to be terminated for default/cause.

(End)

SECTION 01010 - SCOPE OF WORK

**SPECIFICATION SECTION 01010**
**SCOPE OF WORK**
**(1 Story Police Security Building)**

## 1.0 GENERAL

This project consists of the design and construction of an Afghanistan National Police (ANP) Uniformed Police District Headquarters facility (approximately 600 SM in size; see drawing A-1 for exact floor plan) to be located at Lashkar Gah, Helmand Province, Afghanistan. This project is defined as the management, planning, design, material, labor, and equipment, to site adapt and construct all utilities, vehicular access, buildings, force protection measures, site security, de-mining activities, and other features as referenced herein. The work within this contract shall meet and be constructed in accordance with current U.S. design and International Building Codes (IBC), Life Safety Codes (NFPA-101), Force Protection and security standards. A partial listing of references is:

IBC, International Building Codes 2006
NFPA 101, Life Safety Codes
UFC 4-010-01, DoD Minimum Anti-Terrorism Standards for Buildings.

## 1.1 ENGLISH LANGUAGE REQUIREMENT

All information shall be presented in English. The Contractor shall have a minimum of one English-speaking representative to communicate with the COR at all times when work is in progress.

## 1.2 PERIOD OF PERFORMANCE

All work under this contract by the contractor shall be completed within 353 calendar days after Notice to Proceed (NTP). Liquidated damages in the amount of $1,950.00 dollars shall be assessed for every calendar day beyond the scheduled contract completion date and charged to the Contractor.

This schedule allows for up to 15 days for the Contractor to achieve approval of site specific submittals.

## 1.3 SUBMITTALS

Submittals and a Submittal Register are required as specified in Section 01335 of the Basic Contract.

## 1.4 CQM TRAINING REQUIREMENT

Before project design and construction begin, the Contractor's Quality Control Manager is required to have completed the U.S. Army Corps of Engineers (USACE) Construction Quality Management (CQM) course, or equivalent. The CQM course will be offered periodically by the Afghanistan Engineer District (AED), USACE. Additional approved CQM courses include those offered by the Commercial Technical Training Center (in Jalalabad) and the Champion Technical Training Center (in Kabul). The Quality Assurance Branch of the AED can provide information related to AED offerings of the CQM course, as well as contact information for training centers. Alternative CQM courses, other than those mentioned above, must be approved by the Quality Assurance Branch.

The contractor's quality control plan, as defined in USACE Guide Specification 01451 (or 01 45 04.00 10), entitled "Contractor Quality Control", must include "The name, qualifications (in resume format), duties, responsibilities, and authorities of each person assigned a CQC function." For the QC Manager, qualifications must include a certificate demonstrating completion of an approved CQM course.

## 1.5 SITE SECURITY

The Contractor shall provide perimeter force protection security for the developing site. Security may include but is not limited to fence and private security guards. Perimeter security shall prevent unauthorized site access and provide safety protection to the Contractor work force and government

personnel for the duration of the project. The contractor is solely responsible for security however local police shall be coordinated with regarding security.

## 2.0 LOCATION

The site is located in Lashkar Gah, Helmand Province, Afghanistan, as indicated in the attached Right of Entry document.

## 3.0 UNEXPLODED ORDNANCE (UXO)

### 3.1 UXO REMOVAL AND CLEARANCE

The contractor shall search for, identify and clear all mines and unexploded ordnance (UXO) from the entire site. The contractor may only provide clearance/removal services via UN Mine Action Center for Afghanistan (UNMACA) accredited entities, and clearance shall be accomplished to the anticipated foundation depth as indicated in the contract. If sub-surface construction activities will be performed on this site the minimum clearance depth will be to 1 meter. Clearance/removal may only be undertaken in accordance with International Mine Action Standards (IMAS) and the Afghanistan Mine Action Standards (AMAS). When mines and/or UXO's are identified, the Contractor shall place them in a location in accordance with IMAS/AMAS. The work shall proceed in phases, concurrently with other construction efforts as determined by the contractor. Construction will not commence in any area that has not been cleared to the specified depth. The contractor shall provide the Government a clearance certificate approved by the UNMACA indicating that the site is clear of mines and UXO's and is available for construction operations to proceed. It is the responsibility of the Contractor to be aware of the risk of encountering UXO/mines and to take all actions necessary to assure a safe work area to perform the requirements of this contract. The Contractor assumes the risk of any and all personal injury, property damage or other liability arising out of or resulting from any Contractor action taken hereunder. The Contractor and its subcontractors may not handle, work with, move, transport, render safe, or disarm any UXO/mine, unless they have appropriate accreditations under the IMAS/AMAS from the UNMACA. The contractor will furnish the US Army Corps of Engineers Demining Safety a copy of their intended demining/demolition plan for a safety review prior to commencement of demining activities on all sites.

If a UXO/mine is encountered after a UNMACA-approved clearance certificate is provided to the Government, UXO/mine disposal shall be handled in accordance with Section 01015, Technical Requirements.

## 4.0 SUMMARY OF WORK

### 4.1 GENERAL REQUIREMENTS FOR FACILITIES

Work shall be executed in accordance with the Technical Requirements in Section 01015 and in the drawings. All requirements set forth in the Scope of Work (Section 01010), but not included in the Technical Requirements and/or drawings, shall be considered as set forth in both and vice versa. In case of question or ambiguity, the Contracting Officer (KO) shall make the final decision. The KO shall furnish the decision in writing if requested by the Contractor. Site adaptation of the provided designs shall be approved by the Contracting Officer's Representative (COR) prior to the start of work. The Contractor shall verify all dimensions provided in the scope of work prior to the start of any construction.

The contractor is <u>encouraged</u> to use Afghan labor and subcontractors to the maximum extent possible commensurate with technical, security or other requirements or necessary considerations. The intent of this contract is also to use locally procured materials and labor to the maximum extent possible, but this does not allow the contractor to make changes to the Government-provided drawings, specifications or design analysis.

The Site Adapt work shall include the preparation of design documents and the subsequent construction of the site improvements described within this Section, Section 01015 and the Government-furnished Drawings, Specifications and Design Analysis, with design adaptations to fit the actual site selected. The facilities required for each site shall include structures and all utilities as indicated in the Drawings and/or Specifications as provided. All sitework and facilities may require design adaptations to meet site conditions, and these adaptations shall be designed and constructed in accordance with current U.S. and International Building Codes and standards and as described in these documents. The contractor must submit any changes to the Government-provided Drawings, Specifications and Design Analysis in accordance with Contract Section 1335, Paragraph “Variations.”

Any standard that can be determined to be substantially equivalent to the standards specified in this document may be used, but it is the Contractor’s responsibility to show the equivalency of the alternate standard and the Contracting Officer must approve its use. A partial listing of references is included within the Request for Proposal.

Work at individual projects sites consists of the construction of a District Headquarters compound in accordance with the contract documentation. The compound consists of a one-story Multi-Purpose Police Security facility (approx 27 m x 24 m) for sixty (60) police which includes a Dining Facility (DFAC), berthing areas and offices/conference areas, armory and jail cells. It also includes force protection structures, electrical system, plumbing/sewage system, and water delivery system. The contractor will insure that all seismic requirements are met in the construction of the facilities.

Site assessments will be provided for all of the sites, but must be verified by the contractor. The contractor is responsible for surveying, grading and drainage, and de-mining activities for the entire site. The entire site is defined by the limits of the Rights of Entry (ROE) and the site assessment.

Development of the compound contained within the required perimeter wall should utilize the most suitable land for construction based on a maximum 75 meters by 75 meters area. Area developed within the perimeter wall should not exceed 5625 square meters, nor should the length of perimeter wall exceed 300 meters. Site plans should be submitted that conform to this requirement and the requirements of the contract documents.

Leach fields may be installed outside the perimeter wall but must be installed within the limits defined by the ROE.

Manufacturer's standard performance guarantees or warranties that extend beyond a 1 year period shall be provided.

### 4.2 SEQUENCE OF WORK

After de-mining, but prior to the construction of any structures, the Contractor shall drill the water well. It is acknowledged that water may not be available at the site despite Contractor good faith efforts to find it. The Contractor shall drill a minimum of two wells to a minimum depth of 120 meters in an attempt to find water. If water cannot be found the contractor shall immediately notify the Contracting Officer’s Representative (COR). The Contractor will be considered to have fulfilled the terms of the contract and will be entitled to the full price of the contract CLIN for well drilling, however, the Contractor must still furnish all other parts of the water distribution system as described in the specifications.

Dry wells must be de-commissioned in accordance with ASTM D 5299. The contractor must submit a written plan for de-commissioning wells.

### 4.3 PROGRAMATIC DESIGN CHARRETTE

The contractor shall prepare a programmatic Master Site Plan that will be generally applied to all construction locations. The Master Site Plan shall include all locations of construction office/storage containers, laydown and construction debris removal area. The development of the master plan will include participation in a charrette that will be conducted at the Corps of Engineers Area or Resident Office administering the contract. The charrette shall be scheduled by the Government to occur within

ten (10) calendar days of notice to proceed. The programmatic Master Site Plan shall be submitted to the Government no later than twenty (20) days after Notice to Proceed. Site specific adaptations of the programmatic Master Site Plan shall be submitted to the Government according to the schedule provided above.

### 4.4 SITE SPECIFIC SURVEYS & SUBMITTALS

For each individual construction site, the Contractor shall perform a geotechnical investigation as defined in Section 01015, perform a topographic survey of the site; adapt the programmatic Master Site Plan to the conditions applicable for specific locations; prepare a complete grading and drainage plan with existing grades, proposed grades, and building finished floor elevations based on the technical requirements; prepare a landscaping plan; prepare a water supply, disinfection, and distribution layout plan; and prepare a wastewater collection, septic tank, and leach field layout plan. If there is a requirement for on-site demolition, the Contractor shall prepare and submit a demolition plan for that particular site. The Contractor shall not locate facilities in wadis or dry river beds. The finish floor elevation of all facilities and slabs shall be a minimum of 150 mm above flood elevations or river banks, whichever is at the highest elevation. The contractor shall provide drawings and details to describe any adaptations to the standard design that will be required for individual project sites as a site specific submittal as necessary. At a minimum, site specific submittals shall include: the geotechnical investigation report; drawings, details and calculations associated with well construction; drawings and details associated with demolition; drawings, and details associated with site grading; drawings, details, and calculations associated with well pump, disinfection system, distribution system construction; and drawings, details and calculations associated with sanitary sewer and leach field construction.

### 4.5 DEMOLITION AND GRADING

As applicable, the contractor shall demolish all existing structures and buildings at the site prior to commencement of new work. The Contractor shall remove and dispose of all debris, concrete, and foundations. The Contractor shall verify the location of debris disposal with the Contracting Officer's Representative. The Contractor shall perform complete final site grading after installation of all required drainage structures per the Drainage Plan that shall be prepared as part of this project and after installation of any other buried utilities or other project components.

Native crushed stone 100 mm thick shall be placed around all buildings, from the building wall or building landscaping out 2,000 mm and all areas of anticipated foot or vehicle traffic to reduce erosion and to provide dust control. Contractor shall compact existing subgrade to a minimum 95% of the laboratory maximum dry density as determined by ASTM D 1557, Modified Proctor test.

### 4.6 WATER SYSTEM

Design and construct a Potable Water System (PWS), to include a well protected in an enclosed water well house, water well pump(s), elevated water storage tank, and an underground pipe distribution network system. The Well house shall be constructed in accordance with drawings. The storage tank shall provide capacity for a minimum of 100 percent of the required daily demand. The required daily demand shall be calculated in accordance with UFC 3-230-03A Water Supply including the use of the Capacity Factor from Chapter 3. Storage tank elevation shall be minimum 15 meters from bottom of the storage tank to adjacent grade, which should be no lower than finished floor elevation of the headquarters building. Maximum water pressures in distribution mains and service lines shall not exceed 517 kPa (75 psi) at ground elevation. Water demand required for fire fighting and for irrigation and landscaping needs shall not be included in design demand calculations.

### 4.7 SANITARY SEWER SYSTEM

The sanitary sewer collection and treatment system shall be designed and constructed by the Contractor. The sanitary sewer collection system shall consist of gravity sewer pipe network and accessories such as manholes, cleanouts, and building service connections.

The sanitary sewer system shall be designed to accommodate the total facility compound population as specified in the Scope of Work and verified by the contractor, including use of the required Capacity Factor from UFC 3-240-09FA Domestic Water Treatment, Chapter 4.

Geotechnical investigation of the proposed sewage treatment site is required and the contractor shall design the sewage treatment system to be compatible with site and soil conditions.

System capacity shall be calculated based on a hydraulic waste load equivalent to 80 percent of the water usage rate of 190L per capita day, or 152L per capita day.

The gravity sewer collection system shall connect to the septic tank and absorption field system.

Sewage treatment system shall be a traditional septic tank absorption field effluent disposal system, facultative pond system or other low maintenance, cost effective system.

**(a)** Site Survey. The Contractor shall conduct a topographic survey to determine existing site characteristics. The Contractor shall conduct a utility survey to determine the locations of any nearby water lines, wells, sanitary sewers, storm sewers and electrical lines.

**(b)** Percolation Testing. At proposed sites for holding ponds and the absorption field, the Contractor shall perform percolation tests in accordance with AED Design Requirements: Sanitary Sewer and Septic Systems. Percolation testing may be carried out with a shovel, posthole digger, solid auger or other appropriate digging instruments. Percolation tests shall be accomplished uniformly throughout the area where the absorption field is to be located. Percolation tests determine the acceptability of the site and serve as the basis of design for the liquid absorption.

**(c)** Sanitary system layout. The Contactor shall design a sanitary system layout following requirements of Section 01015 this contract. Pipe, fittings, and connections shall conform to the respective specifications and other requirements as listed in Contract Section 01015 and all of its referenced codes.

**(d)** Septic system design. The Contractor shall design a septic tank and absorption field system including all tank geometry, hydraulic loading, and inlet and outlet configurations, number of compartments and related site preparation and earthwork. Design will be per specifications provided in Section 01015.

**4.8 SITE POWER, ELECTRICAL, DISTRIBUTION SYSTEM, AND FUEL STORAGE**

Contractor shall site adapt the provided electrical design, modifying it where required to meet NEC (NFPA 70) requirements. Contractor shall refer to Section 01015 for detail descriptions and requirements of the Systems. Major Electrical Systems are, but not limited to: (a) On-Site Power Plant, (b) Site Secondary Power Distribution System, and (c) Interior Secondary Power Distribution System. A bulk fuel storage tank is required for a 30 day supply of fuel and shall be filled with fuel upon completion of the contract.

**4.8.1 On-Site Power Plant:** Power Plant shall consist of one (1) 80 KW (100 KVA) generator to provide service to the Headquarters Compound. Generator shall be provided inside “weather-proof” (IP54 or better) enclosure. Generator pad shall be constructed with a reinforced concrete floor slab. A covered shelter shall be provided. The shelter shall be pole mounted and shall provide coverage for the generator and switchboard pads.

**4.8.2 Site Secondary Power Distribution System:** Site Secondary Power Distribution System shall include installation of underground cables in direct buried, thick walled, Schedule 80 PVC conduit from the Power Plant to the individual facilities.

**4.8.3 Interior Secondary Power Distribution System:** Interior Secondary Power Distribution System, rated at 380/220 volts, 3 phase, 4 wire and 50 Hz. with wiring installed in embedded or surface mounted metal conduits, shall be provided in all facilities, including guard towers and guard shacks.

**4.8.4 Generator Fuel Storage:** The work shall include the fabrication and installation of the entire fuel storage and distribution system. Tanks shall be skid mounted and be provided with either a dike or a spill containment system. The dike or spill containment system should have enough capacity for the entire contents of the tank, plus 10 percent. Provide a molded neoprene isolation pad to isolate an above-ground tank from the concrete pad underneath. Steel tank supports specifically are prone to encounter premature rusting due to constant exposure to moisture and their incompatibility with concrete. Tank shall be designed and manufactured for horizontal installation. Tank shall be mounted on the tank manufacturer's standard support skid. Skid shall span the entire length of the tank and shall separate the tank from the reinforced concrete slab by a minimum of 200 mm. Indicate on the drawings the number and size of each tank man way required. Tanks of 3,780 to 45,430 L to capacity will be provided with 760 mm diameter man ways. Tanks larger than 45,430 L will be provided with 915 mm diameter man ways. Tanks 3,780 L and larger will be provided with a minimum o f1 tank man way to allow for internal tank access. Piping will not penetrate through access man ways. Tank shall be provided with a combination cleanout and gauge connection. Vent pipe sizing shall be not less than 32 mm nominal inside diameter. Vent shall be the rupture disc type calibrated to burst at 13.8 kPa pressure, and operate at 80 percent of burst setting. Tank shall be provided with an overfill alarm system. Tank shall be provided with 2 stick gauges graduated in m and mm. Stick gauge shall be of wood and treated after graduating to prevent swelling or damage from the fuel being stored. Each storage tank shall be provided with an automatic analog reading gauge which is directly mounted to a tank's man way cover. Provide an in-line centrifugal pump as part of the day tank package for fuel transfer from the bulk storage tanks to the day tank. Day tanks shall provide sufficient fuel for four hours of generator operation without refill. Provide cathode protection for metal components. Storage tanks shall be handled with extreme are to prevent damage during placement and shall be installed in accordance with the manufacturer's installation instructions. Piping shall be inspected, tested, and approved before buying, covering, or concealing. Piping shall be installed straight and true to bear evenly on supports. Piping shall be free of traps, shall not be embedded in concrete pavement, and shall drain toward the corresponding storage tank. Any pipe, fittings, or appurtenances found defective after installation shall be replaced. Below ground nonmetallic pipe shall be installed in accordance with pipe manufacturer's instructions. Belowground piping shall be laid with a minimum pitch of 25 mm per 6 m.

## 4.9 FORCE PROTECTION MEASURES

The Contractor shall construct force protection measures as detailed in the drawings which include perimeter walls, gates, vehicle barriers, guard shacks and guard towers. Construct perimeter walls as indicated on the site plan from native stone, as shown on the drawings. Install outriggers and single-strand concertina wire on top of the wall. The walls shall measure at least 2.4 m high from grade inside the compound. Interior grade shall be higher than exterior grade. Wall thickness shall be not less than 600 mm. Guard towers shall be constructed at all four site corners at an offset to allow visual observation along the outside face of the wall. Outrigger supporting arms shall be "Y" shaped with post securely embedded into the top of the wall. Posts shall conform to the IBC standard for Pipe, Steel, Hot Dipped Zinc Coated (Galvanized) Welded.

The Entry Control Point (ECP) will include a manually operated swing steel gate for vehicles and a separate steel swing gate for personnel. The ECP will also include two guard shacks. Design vehicle for ECP entrance is a fuel delivery/septic tank truck typical for region of project site.

The Escape Hatch will include a manually operated, steel, swing gate.

The gates shall be swing type. Hinged gates shall be a pair of 3.65 m wide x 2.4 m high leafs, constructed of steel plates, steel tube frame, and steel tube intermediate posts and rails at the ECP and a single gate, 3.65 m wide x 2.4 m high and similarly constructed at the Escape Hatch. Where site constraints prohibit vehicular sized swing gate at the Escape Hatch provide personnel sized steel swing gate.

The design of the gates shall insure that it is dimensionally stable, square, true and planar. Gate leafs shall not rack or deflect when install on its hinges. Gates shall have a sufficient number of hinges,

anchor mounted to the exterior masonry walls, to support each gate leaf. Provide a locking mechanism that holds the gates together when in the closed position as well as a drop bolt that engages a steel sleeve embedded in the pavement.

Guard Shacks - Construct one guard shack, located outside the compound at the stand-off ECP location of 3.1 meters. Construct a second guard shack inside the perimeter wall adjacent to the personnel gate. Construction shall be in accordance with the drawings.

Guard Towers – The contractor shall construct four (4) guard towers in accordance with the drawings at the four corners of the compound. Guard towers shall be offset from force protection wall corner to allow sight down the outside face of the wall. Access ladders shall be constructed per OSHA Standards. Guard towers shall be provided with general lighting and shall be fitted with one 360-degree omni-directional searchlight. Two weather-resistant duplex receptacles shall be provided as required for general use. The area in the immediate exterior vicinity of the guard tower shall be provided with an all weather non-slip surface and shall be graded to sufficiently drain away from structure.

**4.10 FENCING AND BARRICADES**

Fencing shall consist of the types shown or described herein. Refer Drawings for required types and locations.

**4.11 PARKING, ROADS, & WALKWAYS**

The Contractor shall design and construct the entire road and parking network. The roads shall be designed to carry traffic of a 3 ton two-axle vehicle. A storm drainage system shall also be included. The road layout shall provide access to entry control points, parking lots, vehicle maintenance facilities, fuel points, generator yard, sewage septic tank, and the trash collection point. Provide parking area for vehicles inside the compound. Road design shall be designed per Section 01015, Technical Requirements. Roadways and sidewalks are required as shown on attached drawings and shall be designed and constructed based upon recommendations from geotechnical analysis as required herein.

The Contractor shall design and provide landscaping for the compound. Design and provide a network of concrete sidewalks to connect the buildings.

**4.12 TRASH POINT**

The Contractor shall place, in a location convenient for easy removal, a trash collection point. It shall be located outside the compound walls. The trash point shall be a 1.8 m x 1.8 m concrete pad with 1.8 meter high stucco finished masonry wall about the perimeter. Wall shall be paced on reinforced concrete footings and shall have a concrete coping similar to the force protection wall. One side shall have a 1.2 m wide gate entrance.

**4.13 DISTRICT HEADQUARTERS BUILDING**

The contractor shall site adapt and construct the Police Security Building in accordance with the scope of work, technical specifications, and drawings. The District Headquarters Building shall consist of a reinforced concrete frame, foundation, floor slab, and roof slab, with masonry infill walls. Truss supported metal roof shall be provided over concrete roof slab.

This facility will contain the following functions: berthing of personnel; kitchen/dining; latrines to include sinks, toilets, showers; security area to include holding cells, latrines, weapons storage, and guard room; and administrative space (offices). An outside wood stove kitchen shall be provided. Specific requirements are as indicated below:

> **(a) Foundation Work and Floor** - Construct the foundation in accordance with the contract documentation. Foundation excavation shall extend a sufficient distance from walls and footings to allow for placing and removal of forms. The Contractor shall direct surface water away from the excavation to prevent erosion and undermining the foundation by constructing diversion ditches, dikes, or other site grading.

**(b) Holding Cells** - Construct holding cells in accordance with all contract documents. The holding cells shall not have windows and each holding cell shall have solid reinforced walls as indicated in the drawings. Each holding cell will have a 11-13 gauge steel door with a dead-bolt lock. The door shall have a pass-through slot for passing of food trays with a hinged cover lockable from the outside. Built into the bottom of the door shall be a 300 mm wide by 500 mm tall door for passing a bucket in and out with a hinged cover lockable from the outside. Install a 2400 mm long bench securely bolted to the floor with a wall mounted steel bar. Contractor will construct an Afghan toilet (eastern style) oriented in the correct cultural direction with a screen about 1300 mm high in front of the toilet. Per design, separate gender holding cells will be constructed. An adjacent small mechanical room, as shown on drawing A-1, is required for hot water tank storage and a small air handling unit to provide ventilation and heating to the cells.

**(c) Armory (Weapons Storage)** - The armory shall have solid reinforced walls, as indicated in the drawings, with a 11-13 gauge steel door with a dead-bolt lock. Roof slab shall consist of 200 mm thick concrete slab reinforced with double layers of rebars.

**(d) Dining Area and Kitchen** – The Contractor shall design and construct a kitchen and dining area in accordance with the contract documents. The complete and functional dining and kitchen facility shall be capable of feeding up to thirty (30) personnel at one sitting based on the menu and functional requirements of the ANP and the local availability of food service equipment and supplies. Dining area walls and doors shall have no interior glazing. The contractor shall provide 14 gauge, type 304, (18-8) minimum stainless steel work counters, shelving, scullery sink, stoves, electrical capacity, outlets, and space for future refrigerators and freezers (not in contract) within the DFAC. A 1200 x 1800 mm serving opening is required between the dining area and kitchen with the purpose of both serving food and for dish return. Opening shall have fire rated shutter and no glazing allowed. Equipment shall be durable, easy to operate, maintain, clean, and be locally available. All work counters and scullery shall have an 800 mm deep work surface at 900 mm above the floor and supported by pairs of stainless steel legs (front and back of counters) at 1800 mm maximum centers. Provide integral stainless steel backsplashes at each side adjoining a wall (trim as required at the pass-thru opening). Work counters shall be continuous and fixed to the walls or 800 x 1800 minimum units. See floor plan for proposed kitchen layout. Design must be submitted and approved by the contracting officer prior to purchasing or installing any equipment or furnishings. Interior stoves shall be propane type. Stoves in free standing kitchen shall be wood burning type. Trench type floor drains shall be installed in the kitchen areas. Install a large wash basin with a low rim height designed for washing very large pots. Fire protection is to be provided by fire extinguishers at easily accessible locations. Kitchen adjacent pantry room storage is required. A basin for pot washing is required.

**Propane Stoves** - Propane stoves shall be installed with consideration to ease of cooking operation and daily cleanup. New stoves shall be set into a formed concrete openings such that they can easily be removed for replacement, maintenance and cleaning. Stove dimensions are 72 cm long x 72 cm wide x 50 cm high. Height includes the grill. Desired stove to stove clearance is 72 cm. Each propane stove shall be provided with three burners. The propane stoves shall be of commercial quality and be capable of producing the highest BTU heat output with all three burners on. The center burner is low heat, center and middle burner is medium heat and all three burners is high heat. A shut off valve for each burner shall be provided at the face of the propane appliance. The Contractor shall coordinate with the DFAC staff and Contracting officer in determining amount of propane fuel required daily for the DFAC. The propane fuel requirement shall be calculated based on consumption of fuel every cooking cycle, cooking frequency, and required “surge” capacity. The Contractor shall provide an agreed to amount of fuel tanks filled with propane fuel at time of project completion.

The backsplash and front and side surfaces of stove enclosures shall be terrazzo with heat resistant grout. The top of the stove enclosure shall be finished concrete. Edges will be covered by a metal “L” angle to prevent damaging edges during pot movement.

Propane storage tanks shall be provided and installed in accordance with NFPA 58. Their propane storage tanks shall be installed on a concrete pad, and placed within a covered, secure enclosure to protect tanks from the elements. Provide an access gate for removal and replacement of propane tanks. The access gate shall able to be secured and locked. Propane tanks shall be secured such that none move or topple over.

Piping from propane tanks to their respective propane stoves shall be of wrought iron, ASTM B36.10M or steel (black or galvanized), ASTM A53. The steel piping shall terminate in front of the propane stoves with a shut off valve and quick disconnect nipple. Propane piping shall be installed tight to the exterior wall. Provide a pipe sleeve which is one size larger than the propane piping and install into the propane cooking platform. This pipe sleeve shall be used to pass the propane piping from the exterior to the interior of the building. Piping passing through the exterior wall shall be provided with pipe sleeves. A stainless steel flexible hose (Gastite or equal) shall connect the propane stove to the steel piping per NFPA 58 section 5.8.6. Each end of the flexible hose shall be provided with quick disconnect dielectric fittings.

The floor in front of the row of burner enclosures shall be slightly sloped towards the floor drain to direct water overflowing from pots or spigots near the pots away from the work area in front of the stove enclosures

**Ventilation hoods**

- Hoods shall be designed to capture and confine cooking odors, vapors, and residues.
- Hood exhaust rate shall be 400 cubic feet per minute per linear foot (CFM/ft) (620 L/s per m) of open hood.
- Hoods shall be constructed of 20 gauge stainless steel and shall be provided with a side panel at each end to close in the area between the stove and the hood. Side panels shall be the width of the hood and shall extend to the rear wall at 45 degrees. Approximate dimensions are 37 inches by 37 inches by 45 degrees (925mm by 925mm by 45 degrees). If a non-combustible wall abuts a stove, then a side panel shall not be required on that side of the hood.
- Joints, seams and penetrations shall be externally welded or brazed to form a watertight seal with a smooth surface that is readily cleanable. Hoods shall be securely supported with non-combustible materials.
- Hoods shall extend a minimum of 9 inches (225mm) beyond the front edge of the stove and shall be installed a maximum of 4 feet (1200mm) above the surface of the stove.
- Hoods shall be sealed to the rear wall.
- The center hood of each bank of fans shall have one electrical switch on the front face to operate the exhaust and make-up air fans.
- Grease filters will not be required. Hoods shall be constructed so that grease filters can be installed at a later date.

**Ductwork**

- Ductwork shall be protected against corrosion.
- Ducts shall be constructed of 18 gauge stainless steel.
- Supply and exhaust systems for each hood shall be independent of other duct systems.
- Joints and seams shall be continuously welded or brazed.
- Bracing and supports shall be constructed of non-combustible material securely fastened to the structure. Bolts, screws, rivets, and other fasteners shall not penetrate the duct walls.
- Airflow in the ductwork shall be not less than 500 feet per minute (150m/min).
- Ducts shall be placed a minimum of 18 inches (450mm) from combustible material or 3 inches (75mm) from gypsum wallboard attached to non-combustible structures.
- Ductwork terminating through the roof shall extend a minimum of 18 inches (450mm) above the roof.

- Where roof terminations are not possible, ducts may be terminated through an exterior wall. All ductwork terminating through an exterior wall shall be located a minimum of 3 feet (900mm) from exterior openings. Ductwork shall be pitched to drain back to hood.
- All ductwork terminations shall be a minimum of 10 feet (3000mm) horizontally from other buildings and property lines.

**Exhaust Fans**
- Exhaust fan motor shall be located outside the airstream.
- Fan discharge shall not impinge on the roof, other equipment or appliances, or parts of the building.
- Discharge outlet of exhaust fans shall be a minimum of 40 inches (1000mm) above the roof.
- Up-blast fans shall be hinged and supplied with a flexible weatherproof electrical cable to permit inspection and cleaning.
- Connection between ductwork and exhaust fan shall be flanged, gasketed, and bolted.
- Each exhaust fan shall be electrically interlocked with its corresponding make-up air fan to prevent system operation without both fans in service.

**Make-up Air Fans**
- Make-up air inlet locations shall take into consideration the prevailing wind direction and shall be placed upstream of exhaust outlets.
- Wherever possible, make-up air inlets shall be located a minimum of 10 ft (3m) from exhaust outlets.
- Where make-up air inlets are located within 10 ft (3m) of an exhaust outlet, the make-up air inlet shall be located a minimum of 3 ft (0.92m) below the exhaust outlet.
- Each make-up air fan shall supply a maximum of 110 CFM/ft (170 L/s per m) of perforated diffuser.
- Each make-up air fan shall be electrically interlocked with its corresponding exhaust fan to prevent system operation without both fans in service.

**Testing**
- A performance test shall be conducted upon completion and before final acceptance of the system installation.
- The test shall verify the rate of exhaust and make-up air flow.
- The test shall be witnessed by the COR.

**(e) Wood Stove Kitchen Enclosure** - Provide a steel frame, metal panel enclosure for a wood stove kitchen. Enclosure shall have metal wall panels on three sides and a metal roof, as illustrated in the contract documents, to form a weather tight enclosure on three sides. Foundation shall be 3.6m x 3.6 m reinforced concrete pad with thickened slab around the perimeter. Capillary water barriers shall be provided under the slab. Steel framing members shall conform to ASTM A 653A/A 653M and ASTM A 36/A 36M. Sheet metal for wall panels and roofing shall conform to ASTM A 153/A 153M, ASTM A 653A/A 653M and ASTM A 1008/A 1008M. Design calculations for the enclosure structure and fabrication drawings shall be submitted for approval. General sizing, placement, and construction details have been provided for information only. Enclosure shall be designed to meet all snow, wind, wind uplift, seismic, and lateral loads for the site location. Roofing panels, wall panels, and fascia shall not be less than 24 gauge (0.70 mm) before coating. Exterior panel finish shall be two (2) coats of baked enamel coating or silicone polyester coating consisting of an epoxy primer and a finish coat of silicone polyester or approved equal. Inside shall be primed. Colors shall be from manufacturer's standard color chart and approved by the Contracting Officer. See 1 Story Building drawings for location.

**Wood Stove** - Wood stove shall be constructed out of fire bricks and toped with 5mm thick cast iron countertop. Route the chimney runs inside the building envelope (inside the heated space) so air and flue gases stay at least as warm as the air in the building until they are expelled

outside. The minimum flue thickness shall be no less than 1.5mm black steel. The Contractor shall protect chimney by means of metal rails or masonry wall from damage from large pots during cooking. The chimney shall penetrate the highest part of the building envelope so the chimney functions better. The chimney shall rise at least 60 cm (24 inches) above the roof ridge and its top is clear of obstacles to wind flow so it can produce stable draft and it has a chimney (rain) cap because without one, any chimney is vulnerable to adverse wind pressures. The chimney flue shall be insulated and be the correct size for the appliance so flue gases are kept warm and flow quickly through the system. The flue pipe, if used, shall run straight up from the appliance to the chimney and the chimney has no offsets because each change in direction presents resistance to flow. The appliance and venting system shall be reasonably well-sealed to prevent leaks that introduce cool air and make the system more vulnerable to adverse pressures. The system shall be installed in a building that has a balanced ventilation system. There shall be high exhaust fan in the stove exhaust hood. The Wood stove kitchen shall be well vented with louvers located high at walls on the building ends. The wood feeding doors shall be located on the outside of the building. Provide nearby fenced storage area (25 SM) for wood storage.

**(f) Toilet and shower facilities** - Construct toilets, sinks, ablution, and wash areas in accordance with the contract documents. Toilets shall be oriented in the culturally correct direction. Electric hot water heaters shall be installed to provide hot water to the showers and sinks. Shower stalls shall be large enough to allow room to dress and undress between an outer and inner shower curtain. Stalls shall have a shower curtain on the outside. Showers shall be provided with separate hot and cold water valves for manual mixing. There shall be a fixed shower head nozzle attached directly to the pipe. All eastern style toilets shall be provided with wall-mounted faucets. Urinals are not required. All sinks shall be trough type constructed of block and concrete with ceramic tile exterior and lining capable of withstanding abuse. The building shall be provided with exhaust fans to ventilate steam to the outside environment and, where required, insulate piping to prevent freezing of water pipes in winter. All water supply plumbing shall be exposed and metallic.

**(g) Wall, floor and ceiling finishes** - Complete the wall and ceiling finishing/painting in accordance with the contract documentation. Masonry surfaces are to receive a minimum 1cm plaster coat. The contractor shall paint the interior walls and trim, and the interior ceiling of the building. The surfaces include the interior wall space, the trim, windows, doors, and other interior items. The Engineer shall select colors. All the walls will be painted with water-based paint and building exteriors shall be painted with acrylic based paint. Water-based trim paint will be used for all surfaces such as doors, window frames, etc. Contractor will paint according to the following schedule:

PAINT SCHEDULE:

| | | |
|---|---|---|
| All Surfaces | Water Based Primer | 1 Coat |
| Interior Walls | Water Based Paint | 2 Coats |
| Interior Ceilings | Water Based Paint | 2 Coats |

All surfaces shall be free of dust, dry, and clean prior to painting. Rooms shall be swept and cleaned before painting begins. The time between coats shall conform to the time recommended by the manufacturer. In latrine and shower rooms (if required), use waterproof paint. Contractor will clean up all paint drips, splatters, and spills on surfaces such that no paint stain remains.

All rooms shall have terrazzo tile floor finish except for: pantry and weapons storage (concrete finish), toilet rooms (ceramic tile finish)

**(h) Fuel source for cooking** – Propane stoves shall be provided for indoor cooking and wood burning stoves shall be provided for the exterior kitchen. The wood shall be stored in an exterior

covered cooking area. Thirty (30) day supplies of propane and wood shall be provided for cooking upon completion of the contract.

**(i) Plumbing** – Plumbing fixtures shall be in accordance with section 01015

**(j) Clotheslines** – Provide clotheslines behind the building, approximately 5 m in length with 4 lines across spaced 410 mm apart and of sufficient strength to prevent sagging when all of the lines are loaded.

**4.14 FIRE PROTECTION FEATURES**: no sprinkler system is required, but alarm and smoke detection system is required and detailed in section 01015. All walls, both interior and exterior area 200 mm CMU construction and constitute fire wall protection. All corridor doors shall be 20 minute rated. Both dining room doors shall be 90 minute rated, contain no glazing and have panic hardware. All door glazing must be fire rated and not exceed 0.065 SM in area. Complete fire door requirements are shown on the attached drawings.

-- End of Section --

# SECTION 01015

## TECHNICAL REQUIREMENTS – SITE ADAPT

## 1.0 GENERAL

### 1.1 COMPLIANCE

The Contractor's design and construction must comply with technical requirements contained herein. The Contractor shall provide design and construction using the best blend of cost, construction efficiency, system durability, ease of maintenance and environmental compatibility.

### 1.2 MINIMUM & ALTERNATE REQUIREMENTS

These design and product requirements are minimum requirements.

### 1.3 ASBESTOS CONTAINING MATERIALS

Asbestos containing material (ACM) shall not be used in the design and construction of this project. ACM is defined as 1% or less ACM by weight. If no other material is available which will perform the required function or where the use of other material would be cost prohibitive, a waiver for the use of asbestos containing materials must be obtained from the Contracting Officer.

### 1.4 SAFETY

#### 1.4.1 Unexploded Ordnance (UXO)

1.4.1.1 UXO/Mine Discovery during Project Construction

It is the responsibility of the Contractor to be aware of the risk of encountering UXO/mines and to take all actions necessary to assure a safe work area to perform the requirements of this contract. If during construction, the contractor becomes aware of or encounters UXO/mines or potential UXO/mines, the contractor shall immediately notify the COR, mitigate any delays to scheduled or unscheduled contract work, and clear/remove the UXO/mines. The contractor may only provide clearance/removal services via UN MAC accredited entities. Clearance/removal may only be undertaken in accordance with IMAS. The Contractor assumes the risk of any and all personal injury, property damage or other liability arising out of or resulting from any Contractor action taken hereunder.

NOTE: For previous UXO/mine information, the following points of contact from the UN Mine Action Center of Afghanistan are provided:

| | |
|---|---|
| Mohammad Sediq, Chief of Operations,<br>Email: sediq@unmaca.org<br>Cell: +93 070 295207 | Hansie Heymans, Chief Information Officer,<br>Email: hansie@unmaca.org<br>Cell: +93 070 294286 |

1.4.1.1 Explosives Safety

1.4.1.1.1 Unexploded Ordnance (UXO) Safety Support During Construction

It is the responsibility of the Contractor to be aware of the risk of encountering UXO and to take all actions necessary to assure a safe work area to perform the requirements of this contract. If after the entire site has been cleared of UXO/mines per the International Mine Action Standards (IMAS) and clearance is done to the anticipated foundation depth, the Contractor becomes aware of or encounters UXO or potential UXO during construction, the Contractor shall immediately stop work at the site of the encounter, move to a safe location, notify the COR and Demining Contractor/ Demining Sub-Contractor, and mitigate any delays to scheduled or unscheduled contract work. The Demining Contractor/ Demining Sub-Contractor shall remove

and dispose of UXO's per the International Mine Action Standards (IMAS). These standards can be found at http://www.mineactionstandards.org. The Contractor assumes the risk of any and all personal injury, property damage or other liability, arising out of and resulting from any Contractor action hereunder. In these cases the contractor shall be required to identify and dispose of the ordnance.

1.4.1.1.2 General Safety Considerations

General safety considerations applicable to personnel, both essential and non-essential, at project sites where UXO may be encountered include:

a. Do not carry fire or spark-producing devices.

b. Do not conduct explosive or explosive-related operations without approved procedures and proper supervision and UXO safety support.

c. Do not become careless by reason of familiarity with UXO or the reported probability level of UXO contamination.

d. Do not conduct explosive or potentially explosive operations during inclement weather.

e. Avoid contact with UXO except during UXO clearance operations.

f. Conduct UXO-related operations during daylight hours only.

g. Employ the "buddy system" at all times.

1.4.1.1.3 Activity Hazard Analysis (AHA) briefings

a. Activity Hazard Analysis's shall be prepared in accordance with the Corps of Engineers Safety and Health Requirements Manual, EM 385-1-1.

b. Hazard analyses will be prepared and briefed by personnel that are knowledgeable in UXO and explosives safety standards and requirements. These personnel should understand the specific operational requirement and hazard analysis methodologies. A hazard analysis will be performed for each activity to determine the significance of any potential explosive-related hazards. Explosive residues may be discovered or exposed during UXO operations in the form of powder or various granular and powder based pellets. These contaminants can enter the body through the skin or by ingestion if proper personal hygiene practices are not followed. Explosive fillers such as white phosphorus are dangerously reactive in air and acute exposure can result in serious injury to the skin, eyes, and mucous membranes. They are also a fire hazard.

Safety requirements (or alternatives) that will either eliminate the identified hazards, mitigate or control them to reduce the associated risks to an acceptable level will be developed. The adequacy of the operational and support procedures that will be implemented to eliminate, control, or abate identified hazards or risks will then be evaluated and a second risk assessment completed to verify that a satisfactory safety level has been achieved.

1.4.1.2 Notification of Noncompliance

The Contracting Officer will notify the Contractor of any detected noncompliance with the foregoing requirements. The Contractor shall take immediate corrective action after receipt of such notice. Such notice, when delivered to the Contractor at the work site, shall be deemed sufficient for the purpose of notification. If the Contractor fails or refuses to comply promptly, the Contracting Officer may issue an order stopping all or part of the work until satisfactory corrective action has been taken. The Contractor shall make no part of the time lost due to such stop orders the subject of claim for extension of time or for excess costs or damages.

**1.5 LIMITATION OF WORKING SPACE**

The Contractor shall, except where required for service connections or other special reason(s), confine his operations strictly within the boundaries of the site. Workmen will not be permitted to trespass on adjoining property. Any operations or use of space outside the boundaries of the site shall be by arrangement with all interested parties. It must be emphasized that the Contractor must take all practical steps to prevent his workmen from entering adjoining property and in the event of trespass occurring the Contractor will be held entirely responsible.

Areas located immediately outside the construction area are known to contain mines and unexploded ordnance (UXO). Contractors assume all risks when venturing in or out of the designated work area.

**1.6 TEMPORARY STRUCTURES**

The Contractor shall erect suitable temporary fences, lighting, and necessary structures to safeguard the site, materials and plant against damage or theft and for the protection of the general public and shall adequately maintain the same throughout the course of the contract.

**1.7 SUBCONTRACTORS**

Compliance with the provisions of this section by subcontractors will be the responsibility of the contractor.

**1.8 LIST OF CODES AND TECHNICAL CRITERIA:**

The following codes and technical criteria and those referenced therein shall be required for this project. References within each reference below shall be required and adhered to. This list is not exhaustive and is not necessarily complete.

AABC - Associated Air Balance Council (National Standards for total System Balance)
ACI 301M Specifications for Structural Concrete
ACI 318 Building Code Requirements for Structural Concrete (latest edition), American Concrete Institute
Air Force Manual 32-1071, Security Engineering, volumes 1-4, 1 May 1994
American Water Works Association, ANSI/AWWA C651-99 standard
ARI - Air Conditioning and Refrigeration Institute
ASCE 7-02, Minimum Design Loads for Buildings and Other Structures, 2002
ASHRAE - American Society of Heating, Refrigeration and Air-Conditioning Engineers Handbooks: Fundamentals; HVAC Systems and Equipment; HVAC Applications; Refrigeration.
ASHRAE Standard 55-2004, Thermal Environmental Conditions for Human Occupancy
ASHRAE Standard 62.1-2004, Ventilation for Acceptable Indoor Air Quality
ASHRAE Standard 62.2-2004, Ventilation and Acceptable Indoor Air Quality for Low-Rise Residential
ASHRAE Standard 90.1-2001, Energy Standard for Buildings Except Low-Rise Residential Buildings
ASHRAE Standard 90.2-2004 with 2006 supplement, Energy-Efficient Design of Low-Rise Residential Buildings
ASME - American Society for Mechanical Engineering
ASTM - American Society for Testing and Materials
AWS - American Welding Society
AWWA A100-06, Water Wells
DCID 6/9 Physical Security Standards for Sensitive Compartmented Information Facilities
DCID 1/21, Manual for Physical Security Standards For Sensitive Compartmented Information Facilities (SCIF)
EPA/625/R-00/008, Onsite Wastewater Treatment Systems Manual
EIA ANSI/TIA/EIA-607: (1994) Commercial Building Grounding/Bonding Requirement Standard
Factory Mutual (FM) Approval Guide-Fire Protection (2002)
IBC - International Building Codes, 2006 or latest edition (and its referenced codes including those inset below)
IEEE C2, National Electrical Safety Code (NESC), latest edition

IFGC – International Fuel Gas Code
IMC – International Mechanical Code
IPC – International Plumbing Code
Lighting Handbook, IESNA, latest edition
MIL-HDBK-1190, Facility Planning and Design Guide
Codes and Standards of the National Fire Protection Association (NFPA)
[as applicable and enacted in 2002 or later, unless otherwise noted]
National Electrical Safety Code (NESC), Institute of Electrical and Electronic Engineers (IEEE C2), 2002 edition
NFPA 10, Portable Fire Extinguishers, 2002 edition
NFPA 30, Flammable and Combustible Liquids Code, 2003 edition
NFPA 30A, Code for Motor Fuel Dispensing Facilities and Repair Garages, 2003 edition
NFPA 54, National Fuel Gas Code, 2002
NFPA 58, Liquefied Petroleum Gas Code, 2004
NFPA 70, National Electrical Code, 2005 edition
NFPA 72, National Fire Alarm Code, 2002 edition
NFPA 75, Standard for the Protection of Information Technology Equipment
NFPA 90A, Air Conditioning and Ventilating Systems, 2002 edition
NFPA 101, Life Safety Code, 2006 edition
NFPA 110, Standard for Emergency and Standby Power Systems, 2005 edition
Plumbing and Drainage Institute (PDI-WH-201) water hammer arrestors
SMACNA - Sheet Metal and Air Conditioning Contractors' National Association, Standards and Guides, latest editions
International Mine Action Standards, latest edition; (see http://www.mineactionstandards.org for copy of standards)
TM 5-785 Weather Data
TM 5-802-1 Economic Studies
TM 5-805-4 Noise and Vibration
TM 5-811-1 Electrical Power Supply and Distribution
UFC 1-200-01, Design: General Building Requirements, 20 June 2005
UFC 1-300-07A Design Build Technical Requirements
UFC 3-230-03a, Water Supply, 16 Jan 2004
UFC 3-230-04a, Water Distribution, 16 Jan 2004
UFC 3-230-06a, Subsurface Drainage, 16 Jan 2004
UFC 3-230-07a, Water Supply: Sources and General Considerations, 16 Jan 2004
UFC 3-230-08a, Water Supply: Water Treatment, 16 Jan 2004
UFC 3-230-09a, Water Supply: Water Storage, 16 Jan 2004
UFC 3-230-10a, Water Supply: Water Distribution, 16 Jan 2004
UFC 3-230-13a, Water Supply: Pumping Stations, 16 Jan 2004
UFC 3-230-17FA, Drainage in Areas Other than Airfields, 16 Jan 2004
UFC 3-240-03N, Operation and Maintenance: Wastewater Treatment System Augmenting Handbook, 16 Jan 2004
UFC 3-240-04a, Wastewater Collection, 16 Jan 2004
UFC 3-240-07FA, Sanitary and Industrial Wastewater Collection: Gravity Sewers and Appurtenances, 16 Jan 2004
UFC 3-240-09FA, Domestic Wastewater Treatment, 16 Jan 2004
UFC 1-300-09N, Design Procedures, 25 May 2005
UFC 3-310-01, Structural Load Data, 25 May 2005
UFC 3-310-02A, Structural Design Criteria for Buildings
UFC 3-400-01, Design: Energy Conservation, 5 July 2002
UFC 3-410-01FA Heating, Ventilating and Air Conditioning, Change 1, 15 May 2003
UFC 3-410-02A, HVAC Control Systems. 15 May 2003
UFC 3-410-04N, Industrial Ventilation, 25 October 2004
UFC 3-420-01, Plumbing Systems Design, 19 June 2003
UFC 3-430-01FA, Heating and Cooling Distribution Systems, 27 July 2003
UFC 3-460-01, Petroleum Fuel Facilities, 16 January 2004

UFC 3-501-03N, Electrical Engineering Preliminary Considerations, 16 Jan 2004
UFC 3-520-01, Interior Electrical Systems, 10 June 2002
UFC 3-530-01AN, Design: Interior and Exterior Lighting and Controls, 19 Aug 2005
UFC 3-540-04N Design: Diesel Electric Generating Plants, 16 Jan 2004
UFC 3-550-03FA Design: Electrical Power Supply and Distribution Systems, 1 Mar 2005
UFC 3-600-01, Design: Fire Protection Engineering for Facilities, 26 Sept 2006
UFC 4-010-01, Design: Minimum DoD Antiterrorism Standards for Buildings, 22 Jan 2007
UFC 4-010-02, DoD Minimum Antiterrorism Standoff Distances for Buildings, 19 Jan 2007
UFC 4-022-01, Security Engineering: Entry Control Facilities/Access Control Points, 25 May 2005
UFC 4-229-01N, Design: General Maintenance Facilities 16 January 2004
UFC 4-722-01, Design: Dining Facilities, 27 January 2003
Underwriters' Laboratories (UL) Fire Protection Equipment Directory (2002)
UL Standards (as applicable)
UL 710, Exhaust Hood for Commercial Cooking Equipment, latest edition
UL 737, Fireplace Stoves, latest edition
UL 752, Bullet Resisting Equipment, 2000 or later
USCINCCENT OPORD 97-1
USACE-AED Design Requirements: Hydrology Studies, June 2009
USACE-AED Design Requirements: Culvert & Causeway, June 2009
USACE-AED Well Pumps and Well Design with Attachment A, June 2009
USACE-AED Design Requirements: Wastewater Package Plants, June 2009

The publications to be taken into consideration shall be those of the most recent editions.
Unified Facility Criteria (UFC) is available online at http://www.wbdg.org/ccb/browse_cat.php?o=29&c=4

Standards other than those mentioned above may be accepted if the standards chosen are internationally recognized and meet the minimum requirements of the specified standards. The Contractor shall be prepared to submit proof of this if requested by the Contracting Officer.

## 2.0 SITE DEVELOPMENT

### 2.1 GENERAL

The project includes furnishing all materials, equipment and labor for constructing water, sanitary sewer and storm sewer service lines, as applicable, and connecting to the existing or new sewer networks.

### 2.2 ENVIRONMENTAL PROTECTION

#### 2.2.1 Applicable regulations

The Contractor shall comply with all Host Nation laws, rules, regulations or standards concerning environmental pollution control and abatement with regard to discharge of liquid waste into natural streams or manmade channels. The contractor shall review host nation and U.S. Government environmental regulations with the contracting officer prior to design and discharge of any liquid wastes into natural streams or manmade channels.

#### 2.2.2 Notification

The Contracting Officer will notify the Contractor in writing of any observed non-compliance with the foregoing provisions. The Contractor shall immediately take corrective action. If the Contractor fails or refuses to promptly take corrective action, the Contracting Officer may issue an order stopping all or part of the work until satisfactory corrective action has been taken. No extension of time or damages will be awarded to the Contractor unless it was later determined that the Contractor was in compliance.

#### 2.2.3 Spillages

Measures shall be taken to prevent chemicals, fuels, oils, greases, bituminous materials, waste washings, herbicides and insecticides, and construction materials from polluting the construction site and surrounding area.

### 2.2.4 Disposal
Disposal of any materials, wastes, effluents, trash, garbage, oil, grease, chemicals, etc., shall be taken to a dumpsite off site and subject to the approval of the Contracting Officer. Burning at the project site for the disposal of refuse and debris will not be permitted.

## 2.3 CIVIL SITE DEVELOPMENT

### 2.3.1 Site Plan
The contractor shall prepare plat or plan of property as part of the design package consisting of a Boundary Survey of the property identified in the supplied ROE. The survey shall show the closure of the property boundary consisting of identifying all property corners, establishing horizontal and vertical control listing all bearing and distances of property lines from the centerline of all adjacent roads. The contractor shall place property corner markers and a monument on the property showing site elevations, coordinate grid systems and WGS 84 latitude longitude. This survey shall meet the requirements of World Geodetic System 1984 (WGS 84 UTM Zone in decimal degrees. The survey design shall include topographic map and the locations of all building corners, structures, major trees, road right of ways, names of roads, widths of roads, easements, right of ways, setbacks, parking and paving areas, storage containers, stoops, sidewalks and walkways, above ground utilities, electrical and Bunker locations. The contractor shall identify and show perimeter security walls, fences, hesco barriers, guard towers and entry control point structures. The contractor shall locate the facilities in general agreement with the drawings included and any requirements in the Scope of Work, section 01010. All site features shall be clearly defined and dimensioned on the site plan. Buildings shall be located to provide access for emergency vehicles and fire fighting. Roads and parking areas shall be designed for turning radius of the largest vehicle entering the compound. The site plan shall show geometric design of the site, including applicable dimensions of all exterior facilities, mechanical equipment, pavements, utilities, etc. Required facilities are described in the following sections of this specification. All roads and areas where tractor-trailer vehicles will travel shall be designed for the worst case turning radius. Design and construction of roads and pavements shall be based on recommendations from geotechnical investigation required herein.

All site plans and master plans shall be drawn in the following projection and datum for incorporation into the U.S. Army Corps of Engineers GIS system:

WGS 1984 UTM Zone

### 2.3.2 Demolition
Demolition shall include removal of all structures, foundations, pavements, and utilities, and clear and grubbing. All refuse and debris shall be disposed of off site. Scrap metal shall be the property of the Host Government. The scrap metal on site shall be moved to an area away from the site perimeter as directed by the Contracting Officer's Representative and left for the Host Government to remove and/or salvage.

Demolished fencing and concertina wire shall be neatly rolled up for reuse by the host government. Likewise, used fence posts and outriggers shall be neatly stockpiled for reuse by the host government.

### 2.3.3 Site Grading & Drainage
The contractor will provide all necessary grading to insure adequate drainage so that no areas will be flooded due to a rainfall of a 10-year frequency. Drainage of the area should be compatible with the existing terrain. Building ground floor finished elevation shall be a minimum 150mm above adjacent grade and outside grade shall slope away from the building on all sides at a minimum slope of 3% for a distance of 3 meters. Holes and depressions shall be backfilled. Fill materials shall be composed of satisfactory soils or aggregates defined in ASTM D 2487 as GW, GP, GM, SP, SM, SW, SC, and CL-ML. Minimum soil compaction shall be 95 percent of the laboratory dry maximum density as determined by ASTM D 1557, Modified Proctor test.

### 2.3.4 Paving

2.3.4.1 Roads
Aggregate roads with PCC curbs are required within the compound. All roads shall be of wearing surface 7.3 meters (24 feet) wide, minimum 250 mm course thickness, unless otherwise noted, graded for proper drainage, provided with necessary drainage structures and completed with prescribed surfaces in accordance with applicable sections of TM 5-822-2 and TM 5-822-5 standards contractor shall notify the Contracting Officer immediately if initial site survey determines that area hydrology requires major drainage structures or bridges.

2.3.4.2 Bridges and Site Grading Plan
Preliminary investigation indicates no need for bridges or major drainage structures. The Contractor shall notify the Contracting Officer immediately if initial site survey determines that area hydrology requires major drainage structures or bridges. The contractor shall design a site grading plan that provides positive drainage and minimizes the requirement for major structures in a cost effective manner.

2.3.4.3 Parking Areas and Motor Pools
Contractor shall construct parking and storage areas using aggregate surface. Subgrade shall be scarified and compacted to a minimum of the 95% of the laboratory maximum dry density determined in accordance with ASTM D 1557, Modified Proctor Test or equivalent DIN, BS, or EN standards. Aggregate base shall be 150mm (6 inches) for parking areas, and 250mm (10 inches) for motor pools. Aggregate Base Course (ABC) material must be well graded, durable aggregate uniformly moistened and mechanically stabilized by compaction. ABC shall be compacted to a minimum 100% of the laboratory maximum dry density for the ABC material.

## 2.4 FORCE PROTECTION DESIGN

The Contractor shall design and construct force protection measures to include a complete perimeter wall, Guard Towers, Compound Illumination System, and Entry Control Points (ECP). ECP shall be composed of a Primary ECP, and an Escape Hatch. The Force Protection design shall incorporate minimum setbacks for new facilities to maximum extent possible as permitted by size of the site and the requirements of the user. Force protection design shall be in accordance with Joint Security Directorate Antiterrorism/Force Protection Guide, March 2002. Force Protection design shall also meet the requirements of UFC 4-010-01, Design: Minimum DoD Antiterrorism Standards for Buildings, 8 Oct 2003 and UFC 4-010-02, DoD Minimum Antiterrorism Standoff Distances for Buildings, 8 Oct 2003 and Joint Security Directorate Antiterrorism/Force Protection Guide, March 2002.

See Appendix A for Guard Shack, and Guard Tower building designs and standard details for Perimeter Security wall, and Active and Passive Vehicle Barriers.

### 2.4.1 Perimeter Security Wall

Native stone masonry walls, 600mm thick, shall be constructed around the perimeter of the site. The height of the walls shall measure at least 2.4 meters from the inside grade and inside grade shall in all cases be higher than outside grade. The wall shall be capped with a precast concrete capping. Ourtiggers to support barbed wires and a single-coil concertina style razor wire shall be provided and installed by the contractor. Site grading must slope away from the walls for at least a distance of 5 meters. The wall shall be designed to prevent visual access to the inside of compound by all pedestrian and vehicular traffic outside the compound which may require the wall to be built at a higher level in some locations.

2.4.1.1 Perimeter Wall Access Gates

2.4.1.1.1 Swinging Gates
Gates shall be swing type and be constructed of steel and be a pair of 3.65 m wide x 2.4 m high steel leaves, constructed of 6mm steel plate skins, steel tube frame, and steel tube intermediate posts and rails. Gate design shall insure it is dimensionally stable, square, true and planar. Gate leaves shall not rack, shake or deflect during operation and the hinges are to be designed and constructed to support the

entire weight of each leaf. Gates shall have a sufficient number of hinges, anchor mounted to the exterior masonry walls, to support each gate leaf. Provide a locking mechanism that holds the gates together when in the closed position as well as a drop bolt that engages a steel sleeve embedded in the pavement.

2.4.1.1.2 Outriggers
Outrigger supporting arms shall be “Y” shaped with post securely embedded into the top of the wall. Posts shall conform to ASTM F 1083, Pipe, Steel, Hot Dipped Zinc Coated (Galvanized) Welded.

2.4.1.1.3 Reinforced Barbed Tape
Reinforced barbed tape shall be 600 mm diameter concertina style coil consisting of 31 loops. Each loop shall consist of 19 barb clusters per loop. Adjacent coils loops shall be alternately clipped together at three points about the circumference to produce the concertina effect upon deployment. Spacing between attachments points when deployed shall be 400 mm. The reinforced barbed tape shall be fabricated from 430 series stainless steel with hardness range of Rockwell (30N) 37-45 conforming to the requirements of ASTM A 176. Each barb shall be a minimum of 30.5 mm (1.2 inch) in length, in groups of 4, spaced on 102 mm (4 inch) centers. The stainless steel core wire shall have a 2.5 mm (0.098 inch) diameter with a minimum tensile strength of 895 MPa. Sixteen gauge stainless steel twistable wire ties shall be used for attaching the barbed tape to the barbed wire. The reinforced barbed tape shall be equivalent to NSN: 5660-01-457-9852.

2.4.1.1.4 Chain-Link Fence and Gates
Provide chain-link fence and gates around Well House and water tower. Fence and gate fabric shall be No. 9 gage wires woven into a 50 mm diamond mesh. Fabric shall be coated with 366 grams per square meter zinc galvanizing. Posts shall be ASTM F 1083 Pipe, Steel, Hot Dipped Zinc Coated (Galvanized) Welded or equal. Top of fence and gates shall be provided with outriggers and reinforced barbed tape as indicated above. Post sizes shall be as shown on drawings.

The gates shall be swing type. Hinged gates shall be a pair of 3.65 m wide x 2.4 m high leafs, constructed of a steel tube frame and steel tube intermediate posts and rails. The design of the gates shall insure that it is dimensionally stable, square, true and planar. Gate leafs shall not rack or deflect when install on its hinges. Gates shall have a sufficient number of hinges, anchor mounted to the exterior masonry walls, to support each gate leaf. Provide a locking mechanism that holds the gates together when in the closed position as well as a drop bolt that engages a steel sleeve embedded in the pavement.

**2.4.2 Entry Control Point (ECP) and Primary Escape Hatch**
Primary ECP and Escape Hatch shall be laid out and constructed by the Contractor to facilitate secure entrance of authorized vehicles into the compound. A Guard Shack shall be provided inside the compound as part of the Primary ECP. Entrance to the Primary ECP shall be paved, and shall have a two-leaf steel swinging gate. The gate shall be considered the Active Vehicular Barrier (AVB). A drop arm and guard shack shall be provided and located at a distance of one and a half vehicles away from the entrance to serve as a checkpoint. Jersey Barriers or other approved alternatives shall be used to design and construct a Passive Vehicular Barrier (PVB) beyond and away from the checkpoint to significantly slow down approaching vehicles. The PVB shall be laid out to force approaching vehicles into a snake-like manoeuvre while approaching the checkpoint and to significantly slow them down. See Appendix A for Guard Shack drawings.

The Escape Hatch shall be constructed similar to the Primary ECP gate except it shall be a one leaf swinging gate, half the width of the Primary ECP gate.

2.4.2.1 Vehicle Barriers

2.4.2.1.3 Active Barriers - Drop Arm Gates
The height of the beam shall be a minimum of 30 inches above finished grade. The crash beam must be capable of blocking a minimum road width of 4.0 meters. The crash beam shall be manually raised

and lowered with less than 30 pounds of force. The end of the crash beam should include a locking pin with padlock acceptance for securing the beam when it is in the down position capable of stopping large (10,000 lb.) trucks, in addition to heavy duty steel gates into the compound.

2.4.2.1.4 Passive Barriers - Concrete
Barriers shall be concrete blocks of one meter by one meter by one meter dimensions. Similar arrangements of large stones (one cubic meter size), jersey barriers or equal sized obstacles may be used.

## 2.5 CIVIL UTILITIES

### 2.5.1 General
The design of the water and sanitary systems shall be sized to provide flow and discharge based on a fixture unit basis. The design drawings shall show all utility lines, line sizes, valves, manholes, cleanouts, disinfection systems, and applicable details associated with water and sanitary system designs. Specifications covering water wells, water lines, valves, pumps, pump controls, sanitary sewers and storm sewers shall be submitted as part of the design and shall require standard materials that are available in-country. Contractor shall install and connect exterior sanitary sewer collection and water supply piping to service connection points of each facility requiring such.

### 2.5.2 Water

2.5.2.1 General
Infrastructure design and construction shall serve the demand. The Contractor shall install water distribution mains, branches, laterals, lines and service connections to include all pipe, valves, fittings and appurtenances. Exterior water line construction shall include service to all buildings as described in the Scope of Work Section 01010. The required Average Daily Demand (ADD) approximation is derived from 190 liters per capita per day (lpcd) or 50 gallons per capita per day (gpcd), see UFC 3-230-03A Water Supply for guidance on calculating the ADD. Provide a minimum of one (1) outside water hydrant (hose spigot) for any building or facility for which a water supply is provided for landscaping purposes.

The contractor shall construct water well(s) inside the compound, to provide sufficient supply for the facility. If unavailable within the compound, Contractor shall notify the COR for resolution. Off site water wells then may become a possibility. Unless noted elsewhere, wells shall be capable of supplying one day demand with 8 hours of pumping time. Well construction shall be in accordance with AWWA A100 Water Wells. Well shall be drilled or augured to a minimum depth of 20 m below the existing water table.

Casing – See USACE-AED Well Pumps & Well Design Guide with Attachment A – Guide Specifications for Drinking Water Wells, June 2009

Sealing - See USACE-AED Well Pumps & Well Design Guide with Attachment A – Guide Specifications for Drinking Water Wells, June 2009

Disinfection - See USACE-AED Well Pumps & Well Design Guide with Attachment A – Guide Specifications for Drinking Water Wells, June 2009

Source protection - See USACE-AED Well Pumps & Well Design Guide with Attachment A – Guide Specifications for Drinking Water Wells, June 2009

Crushed stone for well sealing - See USACE-AED Well Pumps & Well Design Guide with Attachment A – Guide Specifications for Drinking Water Wells, June 2009

Cement Grout for well sealing - See USACE-AED Well Pumps & Well Design Guide with Attachment A – Guide Specifications for Drinking Water Wells, June 2009

Concrete - See USACE-AED Well Pumps & Well Design Guide with Attachment A – Guide Specifications for Drinking Water Wells, June 2009

Well Pump – See USACE-AED Well Pumps & Well Design Guide with Attachment A – Guide Specifications for Drinking Water Wells, June 2009

Quality control and testing
a. Pump Testing: See USACE-AED Well Pumps & Well Design Guide with Attachment A – Guide Specifications for Drinking Water Wells, June 2009

b. Water quality testing: See USACE-AED Well Pumps & Well Design Guide with Attachment A – Guide Specifications for Drinking Water Wells, June 2009

2.5.2.2 Water Quality Sampling and Analysis

See USACE-AED Well Pumps & Well Design Guide with Attachment A – Guide Specifications for Drinking Water Wells, June 2009

2.5.2.3 Well House
At new wells or springs, construct a permanent well house with concrete slab floor. The floor of the well house shall slope away from the casing approximately 3 mm per 300 mm (1/8" per foot) and drain to the outside. Floor of well house shall be minimum 300mm above adjacent grade. The well house design should be such that the well pump, motor and drop pipe could be removed readily. Provide an insulated roof hatch above with a hasp and lock. The well house shall protect valves and pumping equipment plus provide freeze protection for the pump discharge piping beyond the check valve. The well house shall be insulated and a heating unit installed. The well shall be protected from unauthorized use by a security fence with lockable gate. Provide outriggers, barbed wire and concertina wire on fence and gate. See Appendix A for Well House design drawings.

2.5.2.4 Raw Water Disinfection
Contractor shall perform disinfection of the well water in accordance with AWWA A 100 or equivalent. Bacteriological samples shall be collected and examined in accordance with Standard Methods for the Examination of Water and Wastewater by a qualified lab as approved by the Contracting Officer.

2.5.2.5 Water Tower
The Contractor shall design and construct a new water tower with water tank in accordance with structural load requirements indicated in Paragraph 4. Tank shall be circular steel or circular concrete. Volume of the tank shall be a minimum storage volume of a full days demand. The Contractor shall verify storage volume requirements based on final design population. The storage facility shall be located on the higher elevations of the site to promote gravity flow and reduce pumping requirements.

Tank shall be welded and coated carbon steel in accordance with AWWA D100-05 and AWWA D102-06; or bolted steel in accordance with AWWA D103-97; or lined cast-in-place concrete. Tank connections shall include; 50 mm (2") minimum inlet; 50 mm (2") minimum outlet; drain; overflow; air vent; and access opening. Inlet and outlet shall be located on opposite sides of tank, and have flexible connection to provide for minor settlement and earthquake protection. The outlet pipe shall exit the tank from the bottom of a horizontal side but shall be high enough off the floor to prevent sediment in tank from entering the water distribution system. Provide necessary openings as required to accommodate level controls for well pump operation. Overflow and air vents shall be screened to prevent bird, insect, and rodent entry. Provide lightening protection for the water tank.

The cast-in-place concrete tank, if provided, shall be lined with sheet material. Material shall be chlorosulfonated polyethylene 1.14 mm thick with a plus or minus 0.100 mm, thickness tolerance. The liners shall be Hypalon product, or approved equal, NSF 54 and NSF 61 approved for potable water

storage. White material is required so that any mechanical damage to the liner can be easily found when the tank is empty. Potable grade chlorosulfonated polyethylene reinforced liner shall be compounded from the first quality material and specifically can be used in hydraulic structures. Only virgin materials shall be used with no regrind or reprocessed materials added. The liner compound shall be specifically designed for liner applications. The liner shall be constructed from two plies of sheeting laminated together over one ply of 10 x 10 - 1000 denier polyester fabric. Liner resin shall comprise greater than 45% by weight of the total sheeting formulation. Fabric shall be fully encapsulated by same material at roll edges. Exposed fabric will not be accepted. The finished lining shall be a sunlight and weather resistance membrane that is flexible, durable, watertight and free from pinholes, blisters and contaminants. The liner shall not impart any impurity to the water so as to render it non-potable for human consumption

2.5.2.6 Disinfection & Chlorination System
Use hypochlorite compounds for disinfection. A hypo-chlorinator shall be used to feed a sodium hypochlorite solution of 5-15% available chlorine into the system. Hypochlorite compound may be a liquid or solid form. The hypo chlorination system shall consist of a chemical solution tank for hypochlorite, diaphragm-type pump, power supply, water pump, pressure switch and storage tank (optional hydro-pneumatic/storage). The pump shall feed a hypochlorite solution in proportion to the water demand. The hypo-chlorinator shall have a pumping rate, liters per day (lpd) (gallons per day (gpd)) adequate to deliver 5 percent (%) available hypochlorite solution adjustable to the quantity of water being produced from the source. Dosage rate will vary somewhat depending on actual pump production rate and available residual chlorine in the system. Contractor shall determine the required dosage rate milligrams per liter (mg/l) to maintain the required chlorine residual (usually 0.2-0.4mg/l) in the distribution system. Chlorine solution tank shall be large enough to hold a three days supply of hypochlorite solution. A fresh solution shall be prepared every two or three days because the solution may lose its strength over time and this will affect the actual chlorine feed rate. The hypochlorite shall be stored in a cool dry place. Sodium hypochlorite can lose from two to four percent of its available chlorine content per month at room temperature. Contractor shall verify required minimum residual chlorine in accordance with local requirements verified and approved by the Contracting Officer. The chlorination system shall have the capability for manually adjusting the dosage rate and be installed in such a manner that the system can be easily disconnected and bypassed in the event of health safety or routine maintenance and repair. Disinfection of water mains shall be in accordance with AWWA standard C651-86 and disinfection of storage facilities in accordance with AWWA standard C652-86

2.5.2.7 Chlorine Shelter
Contractor shall furnish a shelter as per chlorine manufacturer's installation requirements. The Contractor shall provide manufacturers catalog information and shop drawing to the Contracting Officer for approval.

### 2.5.3 Water Distribution System

2.5.3.1 General
The Contractor shall provide a water distribution system described as follows: Pipe diameters used in the network shall be 300mm (12 inch), 250mm (10 inch), 200mm (8 inch), 150mm (6 inch) and 100mm (4 inch), as calculated, using ductile iron (DI) conforming to AWWA C151, installed in accordance with C 600 or polyvinyl chloride (PVC) as per ASTM D 1784 and 1785. W**ater distribution mains shall be 100 mm (4 inch) or greater in diameter.** All pipes and joints shall be capable of at least 1.03 MPa (150 psi) and 1.38 MPa (200psi) hydrostatic test pressure unless otherwise specified. Pipes should be adequate to carry the maximum quantity of water at acceptable velocities 0.9 to 1.5m/sec (3 to 5 ft/sec) at maximum flows not to exceed 2.8m/sec (9.2ft/sec). **The water pressures in the distribution system shall be in the range of 276-414 kPa (40-60 psi) at peak flow conditions**. Maximum pressure shall be 517kPa (75psi) to all points of the distribution system and if high pressures (greater than 690kPa) cannot be avoided, pressure-reducing valves shall be used. Contractor shall provide a system analysis to determine that water pressures are in the range specified above.

Water service connections to buildings shall vary from 19mm, 25mm or 38mm to 75mm, as calculated,

depending on the usage requirement. Pipe service connections from the distribution main to the building shall be either Polyvinyl Chloride (PVC) plastic Schedule 80 ASTM D 1785 or copper tubing conforming to ASTM B 88M, Type K, annealed. After choosing piping material type, use similar piping materials for all buildings for efficiency of future maintenance activities. The distribution network shall be laid out in a combination grid and looped pattern with dead ends not exceeding 30m (99 feet). Dead end sections shall not be less than 150mm (6 inch) diameter and shall either have blow off valves or fire hydrants (flushing valves) installed for periodic flushing of the line. Any pipe with a fire hydrant on the line shall be at least 150mm (6 inch) in diameter. Water supply distribution shall connect to a building service at a point approximately 1.5m (5 feet) outside the building or structure to which the service is required. Adequate cover must be provided for frost protection. A minimum cover of 800mm (2'-8") is required to protect the water distribution system against freezing. Water lines less than 1.25 meters (4 feet) deep under road crossings shall have a reinforced concrete cover of at least 150 mm (6 inch) thickness around the pipe extending out to 1m from each road edge.

2.5.3.2 Pipe

The Contractor shall provide pipe of adequate strength, durability and be corrosion resistant with no adverse effect on water quality. The exterior surface of the pipe must be corrosion resistant. If the pipe is installed underground pipe shall be encased with polyethylene in accordance with AWWA C105. Water distribution pipe material shall be PVC or Ductile Iron (DI). Ductile iron pipe shall conform to AWWA C104, etal. DI fittings shall be suitable for 1.03MPa (150psi) pressure unless otherwise specified. Fittings for mechanical joint pipe shall conform to AWWA C110. Fittings for use with push-on joint pipe shall conform to AWWA C110 and C111. Fittings and specials shall be cement mortar lined (standard thickness) in accordance with C104. Polyvinyl Chloride (PVC) pipe shall conform to ASTM D 1785. Plastic pipe coupling and fittings shall be manufactured of material conforming to ASTM D 1784, Class 12454B. PVC screw joint shall be in accordance with ASTM D 1785, etal, Schedules 40, 80 and 120. PVC pipe couplings and fittings shall be manufactured of material conforming to ASTM D 1784, Class 12454B. Pipe less than 80mm (3 inch), screw joint, shall conform to dimensional requirements of ASTM D schedule 80. Elastomeric gasket-joint, shall conform to dimensional requirements of ASTM D 1785 Schedule 40, All pipe and joints shall be capable of 1.03 MPa (150psi) working pressure and 1.38 MPa (200psi) hydrostatic test pressure. **Contractor shall not use High Density Polyethylene (HDPE) plastic pipe for any of the water lines to include both the distribution and service connections.**

2.5.3.3 Hydrostatic, Leakage and Disinfection tests

The Contracting Officer will be notified not less than 48 hours in advance of any water piping test and will be given full access for monitoring testing procedures and results. Where any section of water line is provided with concrete thrust blocking for fittings or hydrants, tests shall not be made until at least 5 days after installation of concrete thrust blocking, unless otherwise approved.

2.5.3.4 Pressure Test

After the pipe is laid, the joints completed, and the trench partially backfilled leaving the joints exposed for examination, the newly laid piping or any valved section of piping shall, unless otherwise specified, be subjected for 1 hour to a hydrostatic pressure test of 1.38 MPa (200 psi). Each valve shall be opened and closed several times during the test. Exposed pipe, joints, fittings, hydrants and valves shall be carefully examined during the partially opened trench test. Joints showing visible leakage shall be replaced or remade as necessary. Cracked or defective pipe, joints, fittings, hydrants and valves discovered following this pressure test shall be removed and replaced and retested until the test results are satisfactory.

2.5.3.5 Leakage Test

Leakage tests shall be conducted after all pressure tests have been satisfactorily completed. The duration of each leakage test shall be at least 2 hours, and, during the test, water lines shall be subjected to not less than 1.38 MPa (200 psi). Leakage is defined as the quantity of water to be supplied into the newly laid pipe, or any valved or approved section, necessary to maintain pressure to within 34.5kPa (5 psi) of the specified leakage test pressure after the pipe has been filled with water and all air expelled. Pipe installation will not be accepted if leakage exceeds the allowable leakage, as determined by the following formula:

L = 0.0001351ND (P raised to 0.5 power), where
L = Allowable leakage in gallons per hour
N = Number of joints in the length of pipeline tested
D = Nominal diameter of the pipe in inches
P = Average test pressure during the leakage test, in psi gauge

Should any test of pipe disclose leakage greater than that calculated by the above formula, the defective joints shall be located and repaired until the leakage is within the specified allowance, without additional cost to the government.

2.5.3.6 Bacteriological Disinfection

2.5.3.6.1 Disinfection Procedure
Before acceptance of potable water operation, each unit of completed waterline shall be disinfected as prescribed by AWWA C651. After pressure tests have been completed, the unit to be disinfected shall be thoroughly flushed with water until all entrained dirt and mud have been removed before introducing the chlorinating material. Flushing will be performed in a manner and sequence that will prevent recontamination of pipe that has previously been disinfected. The chlorinating material shall be liquid chlorine, calcium hypochlorite, or sodium hypochlorite. The chlorinating material shall provide a dosage of not less than 50 ppm and shall be introduced into the water lines in an approved manner. Polyvinyl Chloride (PVC) pipelines shall be chlorinated using only the above-specified chlorinating material in solution. The agent shall not be introduced into the line in a dry solid state. The treated water shall be retained in the pipe long enough to destroy all non-spore forming bacteria. Except where a shorter period is approved, the retention time shall be at least 24 hours and shall produce not less than 25 ppm of free chlorine residual throughout the line at the end of the retention period. Valves on the lines being disinfected shall be opened and closed several times during the contact period. The line shall then be flushed with clean water until the residual chlorine is reduced to less than 1.0 ppm. During the flushing period, each fire hydrant on the line shall be opened and closed several times.

2.5.3.6.2 Sampling
For each building connected to the water system, personnel from the Contractor's commercial laboratory shall take at least 3 water samples from different points, approved by the Contracting Officer, in proper sterilized containers and perform a bacterial examination in accordance with approved methods. The commercial laboratory shall be verified to be qualified by the appropriate authority for examination of potable water.

2.5.3.6.3 Acceptance Requirements
The disinfection shall be repeated until tests indicate the absence of pollution for at least 2 full days. The unit will not be accepted until satisfactory bacteriological results have been obtained. The Contractor shall provide certified test results from a lab approved by the Government indicating that all water supply systems fall within approved guidelines.

2.5.3.6.4 Time for making Tests
Except for joint material setting or where concrete thrust blocks necessitate a 5-day delay, pipeline jointed with rubber gaskets, mechanical or push-on joints, or couplings may be subjected to hydrostatic pressure, inspected, and tested for leakage at any time after partial completion of backfill.

2.5.3.6.5 Concurrent Tests
The Contractor may elect to conduct the hydrostatic tests using either or both of the following procedures. Regardless of the sequence of tests employed, the results of pressure tests, leakage tests, and disinfection shall be recorded for submission and approval. Replacement, repair or retesting required shall be accomplished by the Contractor at no additional cost to the Government by a lab approved by the government. Pressure and leakage testing may be conducted concurrently, Hydrostatic tests and disinfection may be conducted concurrently, using water treated for disinfection to accomplish the hydrostatic tests. If water is lost when treated for disinfection and air is admitted to the unit being tested, or if any repair procedure results in contamination of the unit, disinfection shall be re-

accomplished.

2.5.3.7 Valves
Valves (Gate valves w/box) shall be placed at all pipe network tees and cross intersections, and the number of valves shall be one less than the number of lines leading into and away from the intersection. For isolation purposes valves shall be spaced not to exceed 3600 mm (12 feet). Gate valves shall be in accordance with AWWA C 500 and/or C509. Butterfly valves (rubber seated) shall be in accordance with C504 etal. The valves and valve boxes shall be constructed to allow a normal valve key to be readily used to open or close the valve. Provide traffic-rated valve boxes. Provide concrete pad, 1 meter (3'-4") square, for all valve boxes.

2.5.3.7.1 Vacuum and Air Release Valves
Air release valves are required to evacuate air from the main high points in the line when it is filled with water, and to allow the discharge of air accumulated under pressure. Vacuum relief valves are needed to permit air to enter a line when it is being emptied of water or subjected to vacuum. Contractor shall submit manufacturer's data for properly sized combination air and vacuum release valves and determine their locations on the distribution system subject to review and approval of the Contracting Officer.

2.5.3.7.2 Blow-Off Valves
The Contractor shall provide 40-50mm (1-5/8" – 2") blow-off valves at ends of dead end mains. Valves should be installed at low points in the mains where the flushing water can be readily discharged to natural or manmade drainage ditches, swales or other.

2.5.3.8 Thrust Blocking
Contractor shall provide concrete thrust blocking at any point where the layout of the system changes the direction of the flow, increases the velocity, or decreases or stops the flow. At these points, the pipes and fittings must be anchored and kept from moving or pulling apart by the use of thrust blocks installed against undisturbed earth.

**2.5.4 Sanitary Sewer**

2.5.4.1 General
There are no functional or salvageable sanitary sewer collection, treatment or disposal facilities at this site. The Contractor shall obtain topographic information or other maps that show vegetation, drainage channels and other land surface features such as underground utilities and related structures that may influence the design and layout of the collection system. If maps are not available, or do not provide satisfactory information or sufficient detail of the site, field surveys shall be performed. Sanitary sewers less than 1.25 meters (4 feet) under road crossings shall have reinforced concrete cover at least 150 mm (6 inch) thick around the pipe. Concrete cover will extend out to at least 1 m from each road edge.

Exterior sanitary sewer line construction shall include service to all buildings as described in the Scope of Work Section 01010. Contractor shall design sanitary sewer collection system using approved field survey data and finished floor elevations. Depending upon the topography and building location, the most practical location of sanitary sewer lines is along one side of the street. In other cases they may be located behind buildings midway between streets. Main collection sewers will follow the most feasible route to the point of discharge. The sewer collection system shall be designed to accommodate the initial occupancy and a reasonable expansion capability. All sewers shall be located outside of the roadways as much as practical, and minimize the number of roadway crossings. To the extent practical, a sewer from one building shall not be constructed under another building, or remain in service where a building is subsequently constructed over it. Construction required shall include appurtenant structures and building sewers to points of connection with building drains 1.5m (5 feet) outside the building to which the sewer collection system is to be connected.

The Contractor shall use the following criteria where possible to provide a layout which is practical, economical and meets hydraulic requirements:

a. Follow slopes of natural topography for gravity sewers.
b. Check subsurface investigations for groundwater levels and types of subsoil encountered. If possible, avoid areas of high groundwater and the placement of sewers below the groundwater table.
c. Avoid routing sewers through areas which require extensive restoration or underground demolition
d. Depending upon the topography and building locates, the most practical location of sanitary sewer lines is along one side of the street. In other cases they may be located behind buildings midway between streets. The intent is to provide future access to the lines for maintenance without impacting vehicular traffic.
e. Avoid placing manholes in low-lying areas where they could be submerged by surface water or subject to surface water inflow. In addition, all manholes shall be constructed 50 mm higher than the finished grade, with the ground sloped away from each manhole for drainage.
f. Sewer lines shall have a minimum of 800 mm of cover for frost protection.
g. Locate manholes at change in direction, pipe size, or slope of gravity sewers.
h. Sewer sections between manholes shall be straight. The use of a curved alignment shall not be permitted.
i. If required by the design, locate manholes at intersections of streets where possible. This minimizes vehicular traffic disruptions if maintenance is required.
j. Sewer lines less than 1.25 meters deep under road crossings shall have a reinforced concrete cover of at least 150mm thickness around the pipe or shall utilize a steel or ductile iron carrier pipe. It is recommended to continue the reinforced concrete cover or carrier pipe a minimum of one (1) meter beyond the designated roadway.
k. Verify that final routing selected is the most cost effective alternative that meets service requirements.

2.5.4.2 Protection of Water Supplies

The Contractor shall ensure that the sewer design meets the following criteria:

a. Sanitary sewers shall be located no closer than 15m (50 feet) horizontally to water wells or reservoirs to be used for potable water supply.

b. Sanitary sewers shall be no closer than 3 m (10 feet) horizontally to potable water lines; where the bottom of the water pipe will be at least 300mm (12 inches) above the top of the sanitary sewer, horizontal spacing shall be a minimum of 1.8m (6 feet).

c. Sanitary sewers crossing above potable water lines shall be constructed of suitable pressure pipe or fully encased in concrete for a distance of 2.7m (9 feet) on each side of the crossing. Pressure pipe will be as required for force mains in accordance with local standards and shall have no joint closer than 1m (3 ft) horizontally to the crossing, unless the joint is fully encased in concrete.

2.5.4.3 Quantity of Wastewater

The Contractor shall verify the average daily flow considering both resident (full occupancy) and non-resident (8hr per day) population. The average daily flow will represent the total waste volume generated over a 24-hour period, and shall be based on the total population of the facility and usage rate of 50 gallons (190 liters) per capita day (water usage). The wastewater flow rate shall be calculated as approximately 80% of water usage rate, or 41 gallons per capita day. Design criteria guideline shall be based on average influent wastewater characteristics as BOD of 250mg/l, SS of 250mg/l, BOD load of 750ppd, and SS load of 750ppd.

2.5.4.4 Gravity Sewer

Sanitary sewers shall be designed to flow at a maximum in the following way: Trunk Sewers - 90 percent full; Laterals and Mains – 80 percent full, Building connections (service) – 70 percent full. Sanitary sewer velocities shall be designed to provide a minimum velocity of 0.6 meters per second (mps) or 2.0 feet per second (fps) at the ADD flow rate and a minimum velocity of 0.8 to 1.05 mps (2.5-3.5fps) at the peak diurnal flow rate. In no case shall the velocity drop below 0.3 mps, (1.0 fps) to prevent settlement of organic solids suspended in the wastewater. Pipe slopes shall be sufficient to provide the required

minimum velocities and depths of cover on the pipe. Unless otherwise indicated (see Building Connections and Service Lines), gravity sewer pipe shall be installed in straight and true runs in between manholes with constant slope and direction, follow guidance presented in UFC 3-240-07FA Sanitary and Industrial Wastewater Collection: Gravity Sewers and Appurtenances. Adequate cover must be provided for frost protection. A minimum cover of 800 mm (2'-8") will be required to protect the sewer against freezing.

**Table 1. Minimum Slopes for Sewers.**

| Sewer Size | Minimum Slope in Meters per 100 Meters |
|---|---|
| 100 mm | 1.00 |
| 150 mm | 0.62 |
| 200 mm | 0.40 |
| 250 mm | 0.28 |
| 300 mm | 0.22 |
| 350 mm | 0.17 |
| 375 mm | 0.15 |
| 400 mm | 0.14 |
| 450 mm | 0.12 |
| 525 mm | 0.10 |
| 600 mm | 0.08 |

2.5.4.5 Manholes

The Contractor shall provide standard depth manholes (MH), (depth may vary) an inside dimension of 1.2m (4 ft). Manholes shall be made of cast-in-place reinforced concrete with reinforced concrete cover. Alternate pre-cast manhole option shall taper to a 750 mm (30-inch) cast iron frame that provides a minimum clear opening of 600 mm (24 inches). In every case, the manholes, frames and covers shall be traffic rated, H-20 load rating. All manholes shall be provided with a concrete bench with a flow line trough, smoothly formed to guide waste flow to the outlet pipe from the inlet pipe(s). The top surface of the bench shall be above the crown of all pipes within the manhole. All surfaces of the bench shall be sloped smoothly toward the trough to guide flow, even under peak flow conditions.

2.5.4.5.1 Manhole Design Requirements

Manholes are required at junctions of gravity sewers and at each change in pipe direction, size or slope, except as noted hereinafter for building connections. Manholes are also required at all starts of the main line.

2.5.4.5.2 Spacing

The distance between manholes must not exceed 120m (400 ft) in sewers of less than 460mm (18 in) in diameter. For sewers 460mm (18 in) and larger, and for outfalls from wastewater treatment facilities, a spacing of up to 180m (600 ft) is allowed provided the velocity is sufficient to prevent sedimentation of solids.

2.5.4.5.3 Pipe Connections

The crown of the outlet pipe from a manhole shall be on line with or below the crown of the inlet pipe. No drop structures shall be allowed without Engineering Branch approval.

2.5.4.5.4 Frames and Covers

Frames and covers shall be cast iron, ductile iron or reinforced concrete, traffic rated in any case to an H-20 load rating. Cast iron frames and covers shall be traffic rated, circular with vent holes.

2.5.4.5.5 Steps for Manholes
Steps shall be cast iron, polyethylene coated, at least 15mm (5/8 in) thick, not less than 400mm (16 in) in width, spaced 300mm (12 in) on center.

2.5.4.6 Pipe
Pipe shall conform to the respective specifications and other requirements as follows: Provide Polyvinyl Vinyl Chloride (PVC) conforming to ASTM D 3034, Type PSM with a maximum SDR of 35, size 380 mm (15inch) or less in diameter. PVC shall be certified as meeting the requirements of ASTM D 1784, cell Class 12454 B. For the pressure pipe indicated for the dosing system, the PVC pipe shall conform to ASTM D2241 PVC Pressure-Rated Pipe (SDR series) and have a maximum SDR of 35. **Contractor shall not use High Density Polyethylene (HDPE) plastic pipe**

2.5.4.6.1 Fittings
Fittings shall be compatible with pipe supplied and shall have a strength not less than that of the pipe. Fittings shall conform to the respective specifications and requirements as follows: provide PVC fittings conforming to ASTM D 3034 for type PSM pipe.

2.5.4.6.2 Joints
Joints installation requirements shall comply with the manufacturers installation instructions. Flexible plastic pipe (PVC or high density polyethylene pipe) gasketed joints shall conform to ASTM D3212.

2.5.4.6.3 Branch Connections
Branch connections shall be made by use of regular fittings or solvent-cemented saddles as approved. Saddles for PVC pipe shall conform to Table 4 of ASTM D 3034.

2.5.4.6.4 The minimum depth of the cover over the pipe crown shall be be 0.8m (2 ft 8”).

2.5.4.6.5 Building Connections and Service Lines
Building connections and service lines will be planned to eliminate as many bends as practical and provide convenience in rodding. Bends greater than 45 degrees made with one fitting should be avoided; combinations of elbows such as 45-45 or 30-60 degrees should be used with a cleanout provided. Connections to other sewers will be made directly to the pipe with standard fittings rather than through manholes. However, a manhole must be used if the connection is more than 31m from the building cleanout. Service connection lines will be a minimum of 150 mm (6 inch) diameter and laid at a minimum 1% grade, but up to 2% as design parameters dictate. Service laterals shall be 200 mm (8 inch) and sloped to maintain the minimum velocity as described in paragraph “Gravity Sewer.”

2.5.4.6.6 Cleanouts
Cleanouts must be installed on all sewer-building connections to provide a means for inserting cleaning rods into the underground pipe. Install manufactured wye fittings. In lieu of a wye fitting, an inspection chamber may be installed. The inspection chamber shall be of the same construction as a manhole. Preferably the cleanout will be of the same diameter as the building sewer, and never be smaller than 150mm (6 in). Cleanouts shall be located within 1m from the building.

2.5.4.6.7 Grease Interceptors
Grease interceptors are used to remove grease from wastewater to prevent it from entering the sanitary sewer and septic systems. All Dining Facilities (DFACs) shall incorporate preliminary treatment with use of a grease interceptor prior to the sanitary sewer system. The grease interceptor shall be of reinforced cast-in-place concrete, reinforced precast concrete or equivalent capacity commercially available steel, with removable three-section, 9.5 mm checker-plate cover, and shall be installed outside the building. Steel grease interceptors shall in be installed in a concrete pit and shall be epoxy-coated to resist

corrosion as recommended by the manufacturer. Concrete shall have 28 MPa minimum compressive strength at 28 days. The grease interceptor shall connect to the sanitary sewer system.

Contractor shall provide access to the grease interceptor as well as bollards around it. The design shall be based on the EPA method.

2.5.4.6.8 Field Quality Control

2.5.4.6.8.1 Field Tests and Inspections
The Contracting Officer will conduct field inspections and witness field tests specified in this section. The Contractor shall perform field tests and provide labor, equipment and incidentals required for testing.

Check each straight run of pipeline for gross deficiencies by holding a light in a manhole; it shall show a practically a full circle of light through the pipeline when viewed from the adjoining end of the line. When pressure piping is used in a non-pressure line for non-pressure use, test this piping as specified for non-pressure pipe.

Test lines for leakage by either infiltration tests or exfiltration tests. Prior to testing for leakage, backfill trench up to at least lower half of the pipe. When necessary to prevent pipeline movement during testing, place additional backfill around pipe to prevent movement during testing, but leaving joints uncovered to permit inspection. When leakage or pressure drop exceeds the allowable amount specified, make satisfactory correction and retest pipeline section in the same manner. Correct visible leaks regardless of leakage test results.

Infiltration tests and ex-filtration tests: Perform these tests for sewer lines made of specified material, not only concrete, in accordance with ASTM C 969M, ASTM C 969. Make calculations in accordance with the Appendix to ASTM C 969M and ASTM 969.

Low-pressure air tests: Perform tests as follows:

(a) Concrete pipe: Test in accordance with ASTM C 924M, ASTM C 924. Allowable pressure drop shall be given in ASTM C 924M ASTM C 924. Make calculations in accordance with the Appendix to ASTM C 924M, ASTM C 924;

(b) Ductile-iron pipe: Test in accordance with the applicable requirements of ASTM C 924M, ASTM C 924. Allowable pressure drop shall be as given in ASTM C 924M, ASTM C 924. Make calculations in accordance with the Appendix to ASTM C 924M, ASTM C 924;

(c) PVC Plastic pipe: Test in accordance with applicable requirements of UBPPA UNI-B-6. Allowable pressure drop shall be as given in UBPPA UNI-B-6. Make calculations in accordance with the Appendix to UBPPA UNI-B-6.

2.5.4.6.9 Deflection Testing
Deflection testing will not be required however; field quality control shall ensure that all piping is installed in accordance with deflection requirements established by the manufacturer.

### 2.5.5 Septic Systems

Septic systems shall be designed and installed in accordance with UFC 3-240-09A, Domestic Wastewater Treatment, 16 January 2004 edition, and the guidance provided in AED Design Requirements: Sanitary Sewer and Septic System. Contractor shall provide at a minimum 4 meter wide compacted aggregate surface access to the septic tank. The septic tank as well as the leach field (absorption area) will be surrounded with bollards. Contractor shall conducted percolation tests on the actual leach field location. The tests will be conducted in native material at the proposed depth of the trenches. This information shall be provided as part of the initial design submittal and will also include particle analysis of soils in accordance with ASTM D-422 to identify material type.

2.5.5.1 Site Survey
The Contractor shall conduct a topographic survey to determine existing site characteristics. The Contractor shall conduct a utility survey to determine the locations of any nearby water lines, wells, sanitary sewers, storm sewers and electrical lines.

## 3.0 ARCHITECTURAL REQUIREMENTS

### 3.1 GENERAL
All material approved shall become standardized material to be used throughout the facilities under contract. Different sub-contractors shall not use different material or standards under the contract. Intent of the project is to use locally procured materials (unless specified otherwise) and labor to the maximum extent possible while satisfying seismic building code. Conflicts between criteria shall be brought to the attention of the Contracting Officer for resolution. In such instances, the Contractor shall furnish all available information with justification to the Contracting Officer.

### 3.2 DESIGN CRITERIA
The Codes, Standards, and Regulations listed herein shall be used in the construction of this project. The publications shall be the referenced editions. Standards other than those mentioned may be accepted provided they meet the minimum requirements and the contractor shall submit proof of equivalency to the Contracting Officer for approval.

IBC - International Building Code, 2006
NFPA 101 - Life Safety Code, 2006.

### 3.3 LIFE SAFETY/ FIRE PROTECTION/ HANDICAPPED ACCESSIBILITY
To the extent possible, all facilities have been designed in accordance with recognized industry standards for life safety and building egress. An adequate fire alarm system, fire extinguishers, and smoke alarms shall all be included as indicated in the drawings. In keeping with the intended function of these facilities, handicapped accessibility is not a requirement in this project.

### 3.4 ANTITERRORISM/ FORCE PROTECTION
Force protection/anti-terrorism measures for this location shall be followed and incorporated into this project in accordance with the referenced DoD Regulations. Information regarding force protection may be found herein and at the following link: www.tisp.org/files/pdf/dodstandards.pdf .

### 3.5 EXCAVATION
Trench excavation shall be made for concrete footings. Trenches shall be a minimum of .8 meter deep. Trenches deeper than 1.5 meters shall have protective shoring to protect workers or have the sides of the trench sloped back at a slope of 1.5:1. Care shall be taken when backfilling of foundation trenches to avoid damage to walls. Any excess dirt shall become the property of the Contractor and shall be removed from the site to a location approved by the Contracting Officer.

### 3.6 THERMAL PERFORMANCE OF EXTERNAL BUILDING ASSEMBLIES
External building assemblies shall meet the requirements of TI-800, Design Criteria, UFC 3-400-01 Design: Energy Conservation, and ASHRAE Standard 90.1, latest editions, but shall meet the following minimum requirements:

| Assembly | Minimum Thermal Value |
|---|---|
| Exterior walls (above grade) | RSI 1.936 (R 13) |
| Ceilings/roof | RSI 3.345 (R 30) |
| Floor (over unheated space) | RSI 3.345 (R 19) |
| Exterior doors | RSI 0.25 (R 1.43) |
| Exterior windows/(glazing within doors) | RSI 0.308(R 1.75) |
| Skylights | RSI 0.18 (R 1.02) |

RSI measured in m2-K/W, R measured in sqft-F-hr/BTU.

## 3.7 CONCRETE & MASONRY

### 3.7.1 Concrete

Place 150 mm (6”) of capillary water barrier below areas to receive a concrete slab on properly compacted soil free of organic material. Concrete flooring in wet areas shall slope to the floor drain and not allow for water to puddle. Concrete slabs in all areas shall not be placed prior to inspection and approval of piping and sub-surface by the Contracting Officer. Foundation trenches shall be level and free of loose material. Trenches shall be inspected and approved by the Contracting Officer prior to placing of any concrete foundations. See paragraph 4 for structural characteristics of concrete and reinforcing steel for foundations and slabs.

### 3.7.2 Masonry

Storage of masonry materials shall be in a dry place or materials shall be covered with a plastic protective layer. Cover open walls each day to keep them protected and dry. Concrete masonry units (CMU) for exterior walls shall be either 190 mm or 290 mm wide x 390 mm x 190 mm high as shown on drawings. All cells shall be fully grouted and reinforced. They shall be installed in running bond level and plumb. Mortar joints shall be 10 mm on all sides between CMU. Joints shall be struck with a concave tool to provide a smooth recessed curved surface. Install only quality units. The surface shall be free of chips, cracks, or other imperfections that would detract from the overall appearance of the finished wall. Defective CMU or mortar shall be rejected.

## 3.8 METAL

### 3.8.1 Trim

3.8.1.1 Metal Window Sills

Galvanized metal window sills, 1 mm (20-gage), shall be installed on the exterior of all windows. The metal window sills shall have a turn down of 50 mm over the exterior masonry and stucco. Metal sills shall extend from side to side of the masonry opening in a single piece. Extend the metal window sill a minimum of 20 mm under the bottom of the aluminum windows. Install masonry mortar as required for a smooth surface under the window sills. Sills shall slope a minimum of 6mm to the exterior and not allow water to puddle.

3.8.1.2 Metal Fascia & Soffit

No wood fascias and/or soffits are allowed. Use metal fascias and soffits throughout. Extend roof decking out over fascia a minimum of 20 mm. Provide a 40 mm drip flashing over edge of roof decking so that it extends past bottom of decking on all sides of the building. Provide continuous soffit venting of all overhangs at both bottom and top of roof slope.

### 3.8.2 Dining Facilities

3.8.2.1 Steel Cook Top

Provide steel cook top in kitchen minimum thickness of 25 mm. Provide circular cut outs. Consult with the Contracting Officer for the diameter of circular cutouts. Provide steel infill plates for all cut out openings. Cook top can be made of several pieces for ease of handling. Adjacent plates shall be tight fitting to each other.

3.8.2.2 Pass-Through Counter Top

Provide 1.6 mm (16 gauge) stainless steel, or 40 mm marble, pass through counter tops at openings between the kitchen and dining area. Edges shall be turned down 30 mm and corners shall be welded and ground smooth. Provide anchor angles welded to the bottom of the counters to anchor tops to masonry walls below. Provide six (6) anchors on the Dish Return Counter, three (3) on each side of the wall. Provide eight (8) anchors on the Serving Counter, four (4) on each side of the wall. Anchor angles to wall with masonry expansion sleeves and stainless steel screws. Counter tops are to be 600 mm wide x length of opening shown. No glazing is allowed for the pass thru counter top and must contain a fire rated pull down shutter as described in the next paragraph.

3.8.2.3 Fire Counter Shutter (Dining Facilities)
Fire Counter Shutters shall be installed in conjunction with the Pass-Through Counter Tops described in the paragraph above. Fire counter shutters shall be used to separate the kitchens from the dining areas, and shall be U.L labeled for gypsum board, masonry and steel openings, and rated at 90 minutes in full compliance with NFPA-80 standards. Finish of shutter, guides and hoods shall be stainless steel. System shall be activated by 74˚ C (1 65˚ F) fusible links, and by electrical switches located near exit doors. Bottom bar sliding bolt locks shall be provided to secure the shutters in the down position; bolts shall be operated from the kitchen side of the shutter.

3.8.2.4 Trench Covers and Frames.
Trench covers shall be designed to meet the indicated load requirements. Trench frames and anchors shall be all welded steel construction designed to match cover. Covers shall have flush drop handles formed of 6 mm round stock, and shall be steel floor plate. Grating opening widths shall not exceed 25 mm. See drawings for locations.

**3.8.3 Mirror Frames.** Frames for plate glass mirrors larger than 450 by 750 mm shall be fabricated from extruded aluminum with anodized finish. Frames shall be provided with concealed fittings and tamperproof mountings.

**3.8.4 Sunshades (Power Generators).** Provide a 3.5 meter by 7.5 meter reinforced concrete pad and metal sunshade for power generator as indicated. See Site Plan for location. Proposed sizes shall be approved by Contracting Officer. Reinforced concrete pads shall have thickened slabs around the perimeters of the slabs Unless Noted Otherwise (UNO). Capillary water barriers shall be provided under the slabs. Sunshade shall have weather tight roofs. Sunshade framing members shall conform to ASTM A 653A/A 653M and ASTM A 36/A 36M. Sheet metal for roofing shall conform to ASTM A 153/A 153M, ASTM A 653A/A 653M and ASTM A 1008/A 1008M. Design calculations for the sunshade structures and fabrication drawings shall be submitted for approval. General sizing, placement, and construction details have been provided for information only. Sunshades shall be designed to meet all snow, wind, wind uplift, seismic, and lateral loads for the site location. Roofing panels and fascia shall not be less than 24 gauge (0.70 mm) before coating. Roof finish shall be two (2) coats of baked enamel coating or silicone polyester coating consisting of an epoxy primer and a finish coat of silicone polyester or approved equal. Coating shall be applied to the outside of the panels. Inside shall be primed. Gutters and downspouts shall be either aluminum (0.81 mm thick minimum) or zinc coated (galvanized). Colors shall be from manufacturer's standard color chart and approved by the Contracting Officer.

**3.8.5 Wood Stove Kitchen Enclosure.** Provide a steel frame, metal panel enclosure for a wood stove kitchen. Enclosure shall have metal wall panels on three sides and a metal roof, as illustrated in the contract documents, to form a weather tight enclosure on three sides. Foundation shall be 3.6m x 3.6 m reinforced concrete pad with thickened slab around the perimeter. Capillary water barriers shall be provided under the slab. Steel framing members shall conform to ASTM A 653A/A 653M and ASTM A 36/A 36M. Sheet metal for wall panels and roofing shall conform to ASTM A 153/A 153M, ASTM A 653A/A 653M and ASTM A 1008/A 1008M. Design calculations for the enclosure structure and fabrication drawings shall be submitted for approval. General sizing, placement, and construction details have been provided for information only. Enclosure shall be designed to meet all snow, wind, wind uplift, seismic, and lateral loads for the site location. Roofing panels, wall panels, and fascia shall not be less than 24 gauge (0.70 mm) before coating. Exterior panel finish shall be two (2) coats of baked enamel coating or silicone polyester coating consisting of an epoxy primer and a finish coat of silicone polyester or approved equal. Inside shall be primed. Colors shall be from manufacturer's standard color chart and approved by the Contracting Officer. See 1 Story Building drawings for location.

## 3.9 CARPENTRY

**3.9.1 Wood Trusses for Police Headquarters**. See drawings for wood truss slopes, sizes, and locations. Truss and purlins system shall be designed to meet the local snow load, seismic, and wind

uplift requirements.

Wood trusses shall be constructed of 50 mm x 100 mm wood members with support at 1 m o.c. each way for wood purlins or structural steel decking. Appropriate corrosion resistant fasteners shall be used for attaching members to each other and adjacent substrate.

Note: At the contractor's option, structural steel trusses may be designed and utilized in lieu of wood trusses. Submit shop drawings and calculations for approval.

**3.9.2 Lumber.** Mark each piece of framing and board lumber or each bundle of small pieces of lumber with the grade mark and the species. Distinguish structural, framing, and board lumbers.

**3.9.3 Data Required.** Submit calculations and drawings for all proposed structural members. Do not proceed with modifications until the submittal has been approved.

**3.9.4 Natural Decay- and Insect-Resistant Wood.** Natural decay-resistant and insect-resistant wood shall be used for all wood applications, unless noted otherwise.

**3.9.5 Pressure Treated Wood.** Pressure treated wood shall be used where wood is in contact with concrete or masonry.

**3.9.6 Structural Lumber.** Except where a specific grade is indicated or specified, any of the species and grades shall have allowable unit stresses in kPa per code requirements. Use for joists, rafters, headers, trusses, beams, columns, posts, stair stringers, girders, and all other members shall be stress rated. Design of members and fastenings shall conform to AITC OT-01.

**3.9.7 Framing Lumber and Board Lumber.** Framing lumber such as studs, plates, caps, collar beams, cant strips, bucks, sleepers, nailing strips, and nailers, and board lumber such as subflooring and wall and roof sheathing shall be the species and grades per WWPA G-5.

**3.9.8 Hardware.** Unless otherwise indicated or specified, rough hardware shall be of the type and size necessary for the project requirements. Sizes, types, and spacing of fastenings of manufactured building materials shall be as recommended by the product manufacturer unless otherwise indicated or specified. Hardware exposed to the weather or embedded in or in contact with preservative treated wood, exterior masonry, or concrete walls or slabs shall be zinc-coated.

(a) Bolts, Nuts, Studs, and Rivets

ANSI B18.2.1, ANSI B18.5.2.1M, ASME B18.5.2.2M, ASME B18.2.2, and ASTM A 687.

(b) Anchor Bolts

ASTM A 307, size as indicated, complete with nuts and washers.

(c) Lag Screws and Lag Bolts

ANSI B18.2.1.

(d) Nails

Nails shall be the size and type best suited for the purpose and shall conform to ASTM F 547. Nails shall be hot-dip galvanized or aluminum when used on exterior work.

**3.9.9 Trim, Finish, and Frames.** Provide species and grades listed for materials to be paint finished. Provide materials that are to be stain, natural, or transparent finished one grade higher than that listed. Provide species indicated for materials to be transparent finished.

## 3.10 ROOFING AND WEATHERPROOFING

### 3.10.1 Sloped Roofs

On sloping roofs provide and install .70 mm (24 gauge) galvanized steel in either corrugated or standing seam design. Metal roofing shall be anchored to the steel “Z” purlins or wood framing using exposed fasteners at 300 mm on center at all seams and at 600 mm on center in the panel field. Fasteners shall be placed at the top of the corrugation taking care not to dent panel. Roof sealant or adhesive shall be placed over each anchor head. Roofing system shall include all edge, ridge and penetration flashings necessary for a watertight installation and as described in this section. Roofing shall be galvanized mil finish. Panels shall be overlapped two corrugations side to side and be continuous sheets from ridge to eave. Provide continuous ridge vents on all gable roofs. Ridge vents shall be weather tight and prevent infiltration by insects. Eaves shall also be vented continuously or with 50 mm round or square vents at 600 mm max centers.

**3.10.2 Flashing & Sheet Metal**

3.10.2.1 Materials
Any metal listed by ASTM, DIN, BS or EN standards. Manual for a particular item may be used, unless otherwise specified or indicated. Materials shall conform to the requirements specified below and to the thicknesses and configurations established in ASTM, DIN, BS or EN standards. Different items need not be of the same metal, except that if copper is selected for any exposed item, all exposed items shall be copper.

3.10.2.2 Steel Sheet, Zinc-Coated (Galvanized)
Zinc coated steel conforming to ASTM A 525, DIN BS or EN Standards.

3.10.2.3 Aluminum wall capping and expansion joint profiles.
Aluminum wall capping shall conform to ASTM B 209 M, DIN 18339, BS or EN Standards.

3.10.2.4 Roof Gutters
Roof gutters shall be installed as indicated. Roof gutters shall be rigidly attached to the building. Supports for roof gutters shall be spaced according to manufacturer’s recommendations.

3.10.2.5 Downspouts
Downspouts shall be designed and fabricated on site. Unless otherwise specified or indicated, exposed edges shall be folded back to form a 13 mm (1/2 inch) hem on the concealed side, and bottom edges of exposed vertical surfaces shall be angled to form drips. Bituminous cement shall not be placed in contact with roofing membranes other than built-up roofing. Downspouts shall be rigidly attached to the building with supports a minimum of 1.5 M apart.

3.10.2.6 Wall, Floor, Ceiling Expansion Joints In Plaster & Stucco
Expansion joints shall be provided as specified in ASTM, DIN 18339, BS or EN Standards.

3.10.2.7 Connections and Jointing

3.10.2.7.1 Soldering
Soldering shall apply to copper and stainless steel items. Edges of sheet metal shall be pre-tinned before soldering is begun. Soldering shall be done slowly with well heated soldering irons so as to thoroughly heat the seams and completely sweat the solder through the full width of the seam. Edges of stainless steel to be pre-tinned shall be treated with soldering acid flux. Soldering shall follow immediately after application of the flux. Upon completion of soldering, the acid flux residue shall be thoroughly cleaned from the sheet metal with a water solution of washing soda and rinsed with clean water.

3.10.2.7.2 Seaming
Flat-lock and soldered-lap seams shall finish not less than 25 mm. wide. Unsoldered plain-lap seams shall lap not less than 75 mm. unless otherwise specified. Flat seams shall be made in the direction of the flow.

3.10.2.7.3 Cleats
A continuous cleat shall be provided where indicated or specified to secure loose edges of the sheet metalwork. Butt joints of cleats shall be spaced approximately 3 mm. apart. The cleat shall be fastened to supporting wood construction with nails evenly spaced not over 300 mm. on centers. Where the fastening is to be made to concrete or masonry, screws shall be used and shall be driven in expansion shields set in concrete or masonry.

3.10.2.8 Flashing
Flashing shall be installed at locations indicated and as specified below. Sealing shall be according to the flashing manufacturer's recommendations. Flashings shall be installed at intersections of roof with vertical surfaces and at projections through roof, except that flashing for heating and plumbing, including piping, roof and floor drains, and for electrical conduit projections through roof or walls are specified in other sections. Except as otherwise indicated, counter flashings shall be provided over base flashings. Perforations in flashings made by masonry anchors shall be installed on top of joint reinforcement. Lashing shall be formed to direct water to the outside of the system.

3.10.2.8.1 Through-wall Flashing
Through-wall flashing includes sill, lintel, and spandrel flashing. The flashing shall be laid with a layer of mortar above and below the flashing so that the total thickness of the two layers of the mortar and flashing are the same thickness as the regular mortar joints. Flashing shall not extend further in to the masonry backup wall than the first mortar joint. Joints in flashing shall be lapped and sealed. Flashing shall be one piece for lintels and sills.

3.10.2.8.2 Lintel Flashing
Lintel flashing shall extend the full length of lintel. Flashing shall extend through the wall one masonry course above the lintels and shall be bent down over the vertical leg of the outer steel lintel angle not less than 50 mm, or shall be applied over top of masonry and pre-cast concrete lintels. Bed joints of lintels at joints shall be under laid with sheet metal bond breaker.

3.10.2.8.3 Sill Flashing
Sill flashing shall extend the full width of the sill and not less than 100 mm beyond ends of sill except at joint where the flashing shall be terminated at the end of the sill.

**3.10.4 Sealants**
Provide a sealant compatible with the material(s) to which it is applied. Do not use a sealant that has exceeded shelf life or has jelled and can not be discharged in a continuous flow from the gun. Apply the sealant in accordance with the manufacturer's instructions with a gun having a nozzle that fits the joint width. Force sealant into joints to fill the joints solidly without air pockets. Tool smooth fresh sealant after application to ensure adhesion. Sealant shall be uniformly smooth and free of wrinkles. Upon completion of sealant application, roughen partially filled or unfilled joints; apply sealant, and tool smooth as specified. Sealer shall be applied over the sealant when and as specified by the sealant manufacturer.

3.10.4.1 Interior Sealant
ASTM C 834 or ASTM C 920, Type S or M, Grade NS, Class 12.5. Use NT, DIN, BS, or EN equal standards.

3.10.4.2 Exterior Sealant
For joints in vertical and horizontal surfaces, provide ASTM C 920, Type S or M, Grade NS, DIN, BS, or EN equal standards.

3.10.4.3 Floor Joint Sealant
(ASTM C 920) Type S or M, Grade P, class 25, use T

3.10.4.4 Primers
Provide a non-staining, quick-drying type and consistency recommended by the sealant manufacturer

for the particular application.

Immediately prior to application of the sealant, clean out loose particles from joints. Where recommended by sealant manufacturer, apply primer to joints in concrete masonry units, wood, and other porous surfaces in accordance with sealant manufacturer's instructions. Do not apply primer to exposed finish surfaces.

3.10.4.5 Bond Breakers
Provide the type and consistency recommended by the sealant manufacturer to prevent adhesion of the sealant to backing or to bottom of the joint.

Provide bond breakers to the back or bottom of joint cavities, as recommended by the sealant manufacturer for each type of joint and sealant used, to prevent sealant from adhering to these surfaces. Carefully apply the bond breaker to avoid contamination of adjoining surfaces or breaking bond with surfaces other than those covered by the bond breaker.

3.10.4.6 Backing
Backing shall be 25 to 33 percent oversize for closed cell and 40 to 50 percent oversize for open cell material, unless otherwise indicated.

3.10.4.7 Cleaning Solvents
Provide type(s) recommended by the sealant manufacturer except for aluminum and bronze surfaces that will be in contact with sealant.

3.10.4.8 Surface Preparation
Surfaces shall be clean, dry to the touch, and free from dirt frost, moisture, grease, oil, wax, lacquer, paint, or other foreign matter that would tend to destroy or impair adhesion. Oil and grease shall be removed with solvent and surfaces shall be wiped dry with clean cloths. When resealing an existing joint, remove existing calk or sealant prior to applying new sealant. For surface types not listed below, the sealant manufacturer shall be contacted for specific recommendations.

3.10.4.9 Masking Tape
Masking tape shall be placed on the finish surface on one or both sides of a joint cavity to protect adjacent finish surfaces from primer or sealant smears. Masking tape shall be removed within 10 minutes after joint has been filled and tooled.

3.10.4.10 Backstops
Install backstops dry and free of tears or holes. Tightly pack the back or bottom of joint cavities with backstop material to provide a joint of the depth specified.

3.10.4.11 Protection
Protect areas adjacent to joints from sealant smears. Masking tape may be used for this purpose if removed 5 to 10 minutes after the joint is filled.

3.10.4.12 Final Cleaning
Upon completion of sealant application, remove remaining smears and stains and leave the work in a clean and neat condition.

a. Masonry and Other Porous Surfaces: Immediately scrape off fresh sealant that has been smeared on masonry and rub clean with a solvent as recommended by the sealant manufacturer. Allow excess sealant to cure for 24 hour then remove by wire brushing or sanding.

b. Metal and Other Non-Porous Surfaces: Remove excess sealant with a solvent-moistened cloth.

**3.11 WINDOWS, DOORS & GLAZING**

**3.11.1 Windows**

(1) Wood windows: Wood windows shall consist of complete units including sash, glazing, frame, weather-stripping, hardware, and insect screen as required. Window units shall meet the Grade 40 requirement of AAMA 101, including general hardware requirements.

(2) Fasteners: Provide aluminum, nonmagnetic stainless steel, epoxy adhesive, or other materials warranted by the manufacturer to be non-corrosive and compatible with wood window members, trim, hardware, anchors, and other components of window units.

(a) Exposed Fasteners: Except where unavoidable for application of hardware, do not use exposed fasteners. For application of hardware, use fasteners that match the finish of the member or hardware being fastened, as appropriate.

(3) Anchors, Clips, and Window Accessories: Fabricate anchors, clips, and window accessories of aluminum, nonmagnetic stainless steel, or hot-dip zinc-coated steel or iron complying with the requirements of DIN 1748; provide sufficient strength to withstand design pressure indicated. As a minimum provide 3 anchors on each side of the frame.

(4) Compression-Type Glazing Strips and Weatherstripping: Unless otherwise indicated, and at the manufacturer's option, provide compressible stripping for glazing and weatherstripping such as molded EPDM or neoprene gaskets.

(5) Sealant: For sealants required within fabricated window units, provide type recommended by the manufacturer for joint size and movement. Sealant shall remain permanently elastic non-shrinking, and non-migrating. Comply with Sealants of these specifications for selection and installation of sealants.

(6) Wire Fabric Insect Screen shall be permanently fixed to the exterior.

3.11.1.1 *Hardware.* Provide the manufacturer's standard hardware fabricated from aluminum, stainless steel, or other corrosion-resistant material compatible with wood and of sufficient strength to perform the function for which it is intended.

3.11.1.2 *Fixed, Casement, Awning and Sliding Windows.* Provide window units as shown on drawings.

3.11.1.3 *Fabrication.* Provide wood windows with paint finish in all buildings to fit the masonry openings. Window openings shall be provided with insect screening permanently fixed to the exterior. Provide a locking device on the interior of each window. Provide anchors on each side of the frame into the adjoining masonry, 3 on each side. Provide weather stripping system for all exterior windows and doors.

3.11.1.4 *Finishes.* Provide paint finish to match color scheme of adjacent buildings.

Color: Approval by Contracting Officer

3.11.1.5 *Inspection.* Inspect openings before beginning installation. Verify that rough or masonry opening is correct and the sill plate is level. Masonry surfaces shall be visibly dry and free of excess mortar, sand, and other construction debris.

3.11.1.6 *Installation.* Comply with manufacturer's specifications and recommendations for installation of window units, hardware, operators, and other components of the work. Set window units plumb, level, and true to line, without warp or rack of frames or sash. Provide proper support and anchor securely in place. Set sill members and other members in a bed of compound or with joint fillers or gaskets, as shown, to provide weather-tight construction. Refer to the Sealant sections for compounds,

fillers, and gaskets to be installed concurrently with window units. Coordinate installation with wall flashings and other components of the work.

3.11.1.7 *Adjusting.* Adjust operating sash and hardware to provide a tight fit at contact points and at weatherstripping for smooth operation and a weather-tight closure.

3.11.1.8 *Cleaning.* Clean surfaces promptly after installation of windows. Exercise care to avoid damage to protective coatings and finishes. Remove excess glazing and sealant compounds, dirt, and other substances. Lubricate hardware and other moving parts.

**3.11.2 Doors.** Doors shall be solid core wood doors, except at prisoner rooms and weapons storage where heavy gauge steel doors should be provided in accordance with the contract drawings. Sizes shall be as shown on the drawings with frames to match door masonry openings. All doors and frames shall be painted U.N.O. All glazed doors shall have minimum 8mm plexiglass glazing in the upper half of the door as indicated in the contract documents. Commercial duty lock sets and hardware shall be used on all doors. Install required louvers, as called for in paragraph 6, in the lower portion of the door. Provide 3 hinges on all doors unless noted otherwise. Provide door handles and locksets that can be locked with a key on all doors. Coordinate the final keying schedule with Contracting Officer prior to ordering lock sets. Generally each building should have 8 master keys fitting all locks, 8 sub-master keys fitting all exterior doors and 3 keys each for each interior door. Include 25% spare key blanks for the amount of keys provided per building. Provide numbering system identifying key to associated room door. Provide weather stripping system for all exterior doors. Submit shop drawings together with lock sets for approval. Note all locksets nomenclature are BMHA 156.13. Door hardware sets shall be provided as follows:

HW-1

| | |
|---|---|
| 1-1/2 pr | Hinges, A5111 |
| 1 ea | Lockset, F04 Entry Lock w/levers, Grade 1, Exit Devices |
| 1 ea | Door Closer, C02061 |
| 1 ea | Marble Threshold |
| 1 ea | Door Sweep |

HW-2

| | |
|---|---|
| 3 pr | Hinges, A5111 |
| 2 ea | Exit Device, Conc Vert Rod, F04 w/Levers, Grade 1 |
| 2 ea | Door Closers, C02061 |
| 1 ea | Marble Threshold |
| 1 ea | Door Sweep |

HW-3

| | |
|---|---|
| 1-1/2 pr | Hinges, A8112 |
| 1 ea | Latch Set, F01 w/Levers, Grade 1 |
| 3 ea | Silencers |

HW-4

| | |
|---|---|
| 1-1/2 pr | Hinges, A8112 |
| 1 ea | Lockset, F05 |
| 1 ea | Stop, L02101 or L02161 |
| 3 ea | Silencers |

HW-5

| | |
|---|---|
| 1-1/2 pr | Hinges, A8112 |
| 1 ea | Lockset, F04 |

| | |
|---|---|
| 1 ea | Stop, L02101 or L02161 |
| 3 ea | Silencers |
| 1 ea | Kick Plate, J102 |
| 1 ea | Mop Plate, J103 |
| 1 ea | Marble Threshold |

HW-6

| | |
|---|---|
| 1-1/2 pr | Hinges, A8112 |
| 1 ea | Lockset, F07 Storeroom Lock |
| 1 ea | Stop, L02101 or L02161 |
| 3 ea | Silencers |

HW-7

| | |
|---|---|
| 1-1/2 pr | Hinges, A5111 |
| 1 ea | Passage Lockset |
| 1 ea | Marble Threshold |
| 1 ea | Door Sweep |

HW-8

| | |
|---|---|
| 3 pr | Hinges, A8112 |
| 2 ea | Door Pull, J405 |
| 2 ea | Door Closer, C02051 |
| 2 ea | Door Stop, L02101 or L02161 |
| 2 ea | Silencers at framehood |

HW-9

| | |
|---|---|
| 1-1/2 pr | Hinges, A5111 |
| 1 ea | Lockset, F05 |
| 1 ea | Stop, L02101 or L02161 |
| 3 ea | Silencers |
| 1 ea | Kick Plate, J102 |
| 1 ea | Mop Plate, J103 |
| 1 ea | Marble Threshold |

HW-10

| | |
|---|---|
| 1-1/2 pr | Hinges, A5111 |
| 1 ea | Passage Lockset |
| 1 ea | Marble Threshold |
| 1 ea | Door Sweep |
| 1 ea | Door Closer, C02061 |

HW-11

| | |
|---|---|
| 2 pr | Hinges A8112 |
| 1 ea | Heavy Duty Dead Bolt Lock |

HW-12

| | |
|---|---|
| 1-1/2 pr | Hinges, A8112 |
| 1 ea | Lockset, F04 |
| 1 ea | Stop, L02101 or L02161 |
| 3 ea | Silencers |

General Note: sleeping rooms require BMHA 156.12 type F13 lockset. All corridor doors, including toilet rooms that face corridors, shall be 20 minute fire rated. Doors to kitchen pantry and weapons storage shall be 45 minute rated. Doors to dining area shall be 90 minute rated, panic hardware and no glazing. Door to kitchen shall be 90 minute rated and no glazing.

3.11.2.1 *Steel Doors (Prison Rooms and Weapons Storage).* SDI A250.8, except as specified otherwise. Prepare doors to receive specified hardware. Doors shall be as indicated. Doors shall be constructed using heavy gauge steel. See drawings for steel door details for prison rooms.

(1) Welded Frames. Continuously weld frame faces at corner joints. Mechanically interlock or continuously weld stops and rabbets. Grind welds smooth.

(2) Stops and Beads. Form stops and beads from 0.9 mm thick steel. Provide for other openings in standard steel frames. Secure beads to frames with oval-head, countersunk Phillips self-tapping sheet metal screws or concealed clips and fasteners. Space fasteners approximately 300 to 400 mm on centers. Miter molded shapes at corners. Butt or miter square or rectangular beads at corners.

(3) Anchors. Provide anchors to secure the frame to adjoining construction. Provide steel anchors, zinc-coated or painted with rust-inhibitive paint, anchors not lighter than 1.2 mm thick.

(a) Wall Anchors. Provide at least three anchors for each jamb. For frames which are more than 2285 mm in height, provide one additional anchor for each jamb for each additional 760 mm or fraction thereof.

* Masonry: Provide anchors of corrugated or perforated steel straps or 5 mm diameter steel wire, adjustable or T-shaped;

* Completed openings: Secure frames to previously placed concrete or masonry with expansion bolts

(b)Floor Anchors. Provide floor anchors drilled for 10 mm anchor bolts at bottom of each jamb member. Where floor fill occurs, terminate bottom of frames at the indicated finished floor levels and support by adjustable extension clips resting on and anchored to the structural slabs.

(4) Hardware Preparation. Provide minimum hardware reinforcing gages as specified in ANSI A250.6. Drill and tap doors and frames to receive finish hardware. Prepare doors and frames for hardware in accordance with the applicable requirements of SDI A250.8 and ANSI A250.6. For additional requirements refer to BHMA A115. Drill and tap for surface-applied hardware at the project site. Build additional reinforcing for surface-applied hardware into the door. Locate hardware in accordance with the requirements of SDI A250.8, as applicable. Punch door frames, with the exception of frames that will have weatherstripping or lightproof or soundproof gasketing, to receive a minimum of two rubber or vinyl door silencers on lock side of single doors and one silencer for each leaf at heads of double doors. Set lock strikes out to provide clearance for silencers.

(5) Finishes. All surfaces of doors and frames shall be thoroughly cleaned, chemically treated and factory primed with a rust inhibiting coating as specified in SDI A250.8, or paintable A25 galvannealed steel without primer. Where coating is removed by welding, apply touchup of factory primer.

(6) Fabrication and Workmanship. Finished doors and frames shall be strong and rigid, neat in appearance, and free from defects, waves, scratches, cuts, dents, ridges, holes, warp, and buckle. Molded members shall be clean cut, straight, and true, with joints coped or mitered, well formed, and in true alignment. Dress exposed welded and soldered joints smooth. Design door frame sections for use with the wall construction indicated. Corner joints shall be well formed and in true alignment. Conceal fastenings where practicable. On wraparound frames for masonry partitions, provide a throat opening 3 mm larger than the actual masonry thickness. Design other frames in exposed masonry walls or partitions to allow sufficient space between the inside back of trim and masonry to receive calking compound.

(a) Grouted Frames. For frames to be installed and to be filled with mortar or grout, fill the stops with strips of rigid insulation to keep the grout out of the stops and to facilitate installation of stop-applied head and jamb seals.

(7) Installation.

(a) Frames. Set frames in accordance with SDI 105. Plumb, align, and brace securely until permanent anchors are set. Anchor bottoms of frames with expansion bolts or powder-actuated fasteners. Build in or secure wall anchors to adjoining construction. Backfill frames with mortar. When an additive is provided in the mortar, coat inside of frames with corrosion-inhibiting bituminous material.

(b) Doors. Hang doors in accordance with clearances specified in SDI A250.8. After erection and glazing, clean and adjust hardware.

(a) Protection and Cleaning. Protect doors and frames from damage. Repair damaged doors and frames prior to completion and acceptance of the project or replace with new, as directed. Wire brush rusted frames until rust is removed. Clean thoroughly. Apply an all-over coat of rust-inhibitive paint of the same type used for shop coat. Upon completion, clean exposed surfaces of doors and frames thoroughly. Remove mastic smears and other unsightly marks.

*3.11.2.2 Wood Doors.* Provide solid core wood doors in the sizes indicated in the contract drawings. Frames shall match new door masonry openings. All glazed doors shall have minimum 8mm plexiglass glazing.

3.11.2.2.1 Accessories

3.11.2.2.1.1 Door Louvers
Fabricate from wood and of sizes indicated. Louvers shall be of the manufacturer's standard design and shall transmit a minimum of 35 percent free air. Louvers shall be the slat type.

3.11.2.2.1.2 Door Light Openings
Provide glazed openings with the manufacturer's standard wood moldings except that moldings for doors to receive natural finish shall be of the same species and color as the face veneers. Moldings for flush doors shall be lip type.

3.11.2.2.1.3 Weather Stripping
Provide weather-stripping that is a standard cataloged product of a manufacturer regularly engaged in the manufacture of this specialized item. Weather stripping shall be looped neoprene or vinyl held in an extruded non-ferrous metal housing. Air leakage of weather stripped doors shall not exceed 0.003125 cubic meter per second of air per square meter of door area when tested in accordance with ASTM E 283

3.11.2.2.2 Pre-fitting
At the Contractor's option, doors may be provided factory pre-fit. Doors shall be sized and machined at the factory by the door manufacturer in accordance with the standards under which they are produced. The work shall include sizing, beveled edges, mortising, and drilling for hardware and providing necessary beaded openings for glass and louvers. Provide the door manufacturer with the necessary hardware samples, and frame and hardware schedules as required to coordinate the work.

3.11.2.2.3 Finishes
Provide door finish colors as selected by the Contracting Officer from the color selection samples.

3.11.2.2.3.1 Water-Resistant Sealer
Provide a water-resistant sealer compatible with the specified finish as approved and as recommended by the door manufacturer.

3.11.2.2.3.2 Installation
Before installation, seal top and bottom edges of doors with the approved water-resistant sealer. Seal cuts made on the job immediately after cutting using approved water-resistant sealer. Fit, trim, and hang doors with a 2 mm minimum, 3 mm maximum clearance at sides and top, and a 5 mm minimum, 6 mm maximum clearance over thresholds. Provide 10 mm minimum, 11 mm maximum clearance at bottom where no threshold occurs. Bevel edges of doors at the rate of 3 mm in 50 mm. Door warp shall not exceed 6 mm when measured in accordance with WDMA I.S. 1-A.

3.11.2.2.4 Weather stripping
Install doors in strict accordance with the manufacturer's printed instructions and details. Weather strip exterior swing-type doors at sills, heads and jambs to provide weather tight installation. Apply weather stripping at sills to bottom rails of doors and hold in place with a brass or bronze plate. Apply weather stripping to door frames at jambs and head. Shape weather stripping at sills to suit the threshold.

**3.11.3 Glazing**
ASTM C 1036, or ASTM C 1172 or equal. Acceptable manufacturer: Gürsan or equal

3.11.3.1 *Plastic Glazing (Plexiglass).* ASTM D 4802, Type II, heat resistant, clear and smooth on both sides, ultraviolet stabilized, scratch resistant, 6 mm thick. All door glazing shall be fire rated per NFPA 80 standards.

3.11.3.2 *Glazing Accessories.*
(1) Sealant. Sealant shall be elastomeric conforming to ASTM, DIN, BS, or EN standards. Type S or M, Grade NS, Class 12.5, Use G. Color of sealant shall be as selected from manufacturer’s full range of standard colors by Contracting Officer.

(2) Glazing Gaskets. Glazing gaskets shall be extruded with continuous integral locking projection designed to engage into metal glass holding members to provide a watertight seal during dynamic loading, building movements and thermal movements. Glazing gaskets for a single glazed opening shall be continuous one-piece units with factory-fabricated injection-molded corners free of flashing and burrs. Glazing gaskets shall be in lengths or units recommended by manufacturer to ensure against pull-back at corners.

(3) Fixed Glazing Gaskets. Fixed glazing gaskets shall be closed-cell (sponge) smooth extruded compression gaskets of cured elastomeric virgin neoprene compounds conforming to ASTM, DIN, BS. Or EN standarts.

(4) Wedge Glazing Gaskets. Wedge glazing gaskets shall be high-quality extrusions of cured elastomeric virgin neoprene compounds, ozone resistant, conforming to ASTM, DIN, BS, or EN standards.

(5) Putty and Glazing Compound. Glazing compound shall conform to ASTM, DIN, BS, or EN standards for face-glazing metal sash. Putty shall be linseed oil type conforming to DIN, BS, or EN standards for face-glazing primed wood sash. Putty and glazing compounds shall not be used with insulating glass or laminated glass.

(6) Setting and Edge Blocking. Neoprene setting blocks shall be dense extruded type conforming to ASTM, DIN, BS, or EN standards. Silicone setting blocks shall be required when blocks are in contact with silicone sealant. Profiles, lengths and locations shall be as required and recommended in writing by glass manufacturer.

3.11.3.3 *Preparation.* Openings and framing systems scheduled to receive glazing shall be examined for compliance with glazing manufacturer’s recommendations including size, squareness, offsets at corners, presence and function of weep system, face and edge clearance requirements and effective sealing between joints of glass-framing members. Detrimental materials shall be removed from

glazing rabbet and glass surfaced and wiped dry with solvent. Glazing surfaces shall be dry and free of frost.

3.11.3.4 *Installation.* Glazing work shall be performed in accordance with, glazing manufacturer's instructions and warranty requirements. Glazing shall be installed with factory labels intact and removed only when instructed. Edges and corners shall not be ground, nipped or cut after leaving factory. Springing, forcing or twisting of units during installation will not be permitted.

3.11.3.5 *Cleaning.* Upon completion of project, outside surfaces of glazing shall be washed clean and the inside surfaces of glass shall be washed and polished in accordance with glazing manufacturer's recommendations.

3.11.3.6 *Protection.* Glazing work shall be protected immediately after installation. Glazed openings shall be identified with suitable warning tapes, cloth, or paper flags, attached with non-staining adhesives. Reflective glass shall be protected with a protective material to eliminate any contamination of the reflective coating. Protective material shall be placed far enough away from the coated glazing to allow air to circulate to reduce heat buildup and moisture accumulation on the glass. Glazing units which are broken, chipped, cracked, abraded, or otherwise damaged during construction activities shall be removed and replaced with new units.

**3.12 FINISHES**

All finishes, colors and materials in existing building and new buildings shall match. See Section 01335 for color submittals required. Provide color boards with all materials for COR approval prior to ordering materials.

**3.12.2 Exterior Walls**

The exterior of all buildings shall be stucco and/or plaster conforming to ASTM C926. A temperature of between 4 and 27 degrees C shall exist for a period of not less than 48 hours prior to application of plaster and for a period of at least 48 hours after plaster has set. Control joints shall be designed for expansion and contraction of plaster work due to thermal exposure. Control joints shall comprise of back to back casing beads. Install new stucco in 2 coats. The first coat shall be a scratch coat approximately 1 cm thick. Allow 7 days to cure. The second coat shall be finish stucco, smooth finish, approximately 1 cm thick. Allow 7 days to cure before painting. Stucco showing over sanding, cracks, blisters, pits, checks, discoloration or other defects is not acceptable. Defective plaster work shall be removed and replaced with new plaster at the expense of the Contractor. Patching of defective work will be permitted only when approved by the Contracting Officer. Patching shall match existing work in texture and color. All exterior color finish shall be integral with the stucco finish. No painted stucco shall be permitted due to minimize future maintenance. Color to be selected by the Contracting Officer from the color board provided by the Contractor.

**3.12.3 Interior Walls**

Interior walls shall be plaster applied in a similar manner as exterior stucco. Paint with 2 coats of semi-gloss off-white with less than .06% lead by weight color to be selected by the Contracting Officer from the color board provided by the Contractor.

**3.12.5 Interior Ceilings**

Ceilings shall be painted plaster over concrete or as shown on contract drawings.
3.12.5.1 Ceilings of Dining Facility shall be exposed concrete painted with 2 coats of flat white, with less than .06% lead by weight.

**3.12.6 Exposed Exterior Steel trim, Frames, Doors and Pipe Railings**

Paint with one coat oil-based primer, with 2 coats of oil-based alkyd gloss enamel, color to be selected by the Contracting Officer from the color board provided by the Contractor.

**3.12.7 Exposed Wood Trim, Frames and Doors**

Paint with one coat oil-based primer, 2 coats of gloss enamel, color to be selected by the Contracting

Officer from the color board provided by the Contractor

**3.12.8 Tile Work**
Tile work shall not be performed unless the substrate and ambient temperature is at least 10 degrees C and rising. Temperature shall be maintained above 10 degrees C while the work is being performed and for at least 7 days after completion of work. Upon completion, tile surfaces shall be thoroughly cleaned in accordance with manufacturer's approved cleaning instructions. Acid shall not be used for cleaning glazed tile. Floor tile with resinous grout or with factory mixed grout shall be cleaned in accordance with instructions of the grout manufacturer. After the grout has set, tile wall surfaces shall be given a protective coat of a non-corrosive soap or other approved method of protection.

3.12.8.1 Floors in wet areas (including mechanical rooms) shall be 300 mm x 300 mm terrazzo tile with thin set mortar. Joints shall be 2-3 mm. Waterproof gray grout shall be applied the full depth of the tile. Floors shall slope, minimum 1/50, to floor drains. Slope shall be obtained with sloping mortar bed of minimum 20 mm thickness. Provide continuous waterproofing membrane beneath sloping mortar bed, turn up wall 300 mm behind wall base. Membrane shall be fully sealed at joints and shall shed water into body of floor drain. Color of tile shall be selected by the Contracting Officer from samples provided by the Contractor.

3.12.8.2 Floors in administration areas, living quarters, dining, kitchen corridors, and all rooms unless otherwise stated shall be **300 mm x 300 mm terrazzo tile with thin set mortar**. Joints shall be 2-3 mm. Waterproof gray grout shall be applied the full depth of the tile. Color of tile shall be selected by the Contracting Officer from samples provided by the Contractor.

3.12.8.3 Walls in wet areas shall be tiled with 150 mm x 150 mm glazed ceramic tile up to 2 meters above the floor to include interior of toilet stalls, showers and behind sinks. Joints shall be 2-3 mm. Waterproof gray grout shall be applied full depth of the tile. Grout shall cure for 72 hours and then be sealed with a commercial grout sealant in two coats. Color of tile shall be selected by the Contracting Officer from samples provided by the Contractor.

3.12.8.4 The ablution drain areas shall be recessed below the floor level 200 mm and lined with ceramic tile. Ceramic tile shall extend up the wall past the water spigots to a height of 2 m above finished floor. Seats shall be formed concrete with terrazzo tile finish to match the floor, 300 mm x 300 mm x 300 mm high finished dimensions. Color of ceramic tile shall be selected by the Contracting Officer from samples provided by the Contractor. Spacing between tiles shall be similar to terrazzo tile.

3.12.8.5 Storage rooms: require sealed concrete floor finish.

**3.13 SPECIALTIES**

**3.13.1 Mirrors**
0.6 m x 0.9 m, 6 mm plate glass shall be mounted above all lavatories. Mount bottom of mirrors 1.1m above finished floor.

**3.13.2 Toilet Paper Holders**
Toilet paper holders, stainless steel, shall be installed approximately 200 mm above floor in Eastern Toilets.

**3.13.3 Shower Curtain Rods & Shower Curtain**
Shower curtain rods, stainless steel, heavy duty, 18 gauge shall be mounted between the screen walls of each shower stall. Mount rod at 2.0 m above finished floor. Provide a shower curtain with support rings for each shower stall.

**3.13.4 Paper Towel Dispensers**
Paper towel dispensers, 0.683 mm Type 304 stainless steel, surface mounted. Furnish tumbler key lock locking mechanism.

**3.13.5 Light Duty Metal Shelf**
Provide a 600 mm long, light duty stainless steel shelf and brackets over each lavatory.

**3.13.6 Robe Hooks**
Robe hooks on all toilet and shower stalls required.

## 4.0 STRUCTURAL

### 4.1 GENERAL
The project consists of various structures. The new buildings shall be provided with a reinforced concrete slab foundation that is properly placed on suitable compacted ground area and shall be in accordance with the recommendations from the geotechnical investigation. The reinforced concrete foundation shall be designed by the Contractor. Building foundations shall be founded a minimum of 800 mm below grade.

### 4.2 DESIGN
Designs for wood stove kitchen enclosure, generator sunshade, and roof trusses shall be performed and design documents signed by a registered professional architect and/or engineer. Calculations shall be in SI (metric) units of measurements. All components of the building shall be designed and constructed to support safely all loads without exceeding the allowable stress for the materials of construction in the structural members and connections. All building exterior walls shall be constructed with reinforced CMU, shot-crete 3-D panels, or reinforced concrete unless otherwise stated in sections 1010 or 1015.

### 4.3 STANDARDS
The Contractor should use the following American standards to provide sound structural design if local standards are not available, relevant, or applicable. The Contractor shall follow American Concrete Institute Standards for design and installation of all concrete structures.

| | |
|---|---|
| Plaster strength | 140.0 kg./sq.cm (f'c) (2000psi) conforming to ASTM C 926. |
| Steel Reinforcement | 4218.0 kg./sq.cm(Fy= 60.0 ksi),yield strength. |
| Welded Wire Fabric | ASTM A185 |
| Anchor Bolts | ASTM A307 using A36 steel. |
| Concrete Masonry Units | ASTM C90, Type I (normal wt, moisture Cntrl). |
| Mortar | ASTM C270, Type S (Ultimate compressive strength of 130.0 kg/sq. cm.) |
| Proportion | 1 part cement, 0-1/2 part lime and 4-1/2 parts aggregate |
| Grout | ASTM C476 (Slump between 200 mm to 250 and Compressive Strength 14 MPa (2000 psi) at 28 days. |
| Joint Reinforcement | Standard 9 gauge minium, Ladder Type |
| Structural Steel | ASTM A36: 2530.0 kg./sq.cm (Fy = 36,000psi) |
| Welding | AWS (American Welding Society) D1.1-2002. |

### 4.4 DEAD AND LIVE LOADS
Dead loads consist of the weight of all materials of construction incorporated in the buildings. Live loads used for design shall be in accordance with the Structural Load Data, UFC-3-310-01, and edition as referenced herein.

### 4.5 WIND LOADS
Wind loads shall be calculated using a "3-second gust" wind speed of 125 km/hr.

### 4.6 SEISMIC
The building and all parts thereof shall be designed for the seismic requirements as defined by the International Building Code referenced herein. Spectral ordinates shall be $S_s$ = 1.28g and $S_1$ = 0.51g.

## 4.7 STRUCTURAL CONCRETE

Concrete structural elements shall be constructed in accordance with the provisions of the American Concrete Institute, Building Code Requirements for Structural Concrete, ACI 318, referenced edition. For the design and construction of all structural concrete, use a minimum 28 day compressive strength of 24 MPa (3500 psi) or as shown on the drawings, whichever is greater. Reinforcing steel shall be deformed bars conforming to American Society for Testing and Materials (ASTM) publication ASTM a 615, Deformed and Plain Billet-Steel Bars for Concrete Reinforcement. Concrete shall have maximum water-cement ratio of 0.45. No concrete shall be placed when the ambient air temperature exceeds 32 degrees C (90 degrees F) unless an appropriate chemical retardant is used. In all cases when concrete is placed at 32 degrees C (90 degrees F) or hotter it shall be covered and kept continuously wet for a minimum of 48 hours. Concrete members at or below grade shall have a minimum concrete cover over reinforcement of 75 mm (3 inch).

## 4.8 MASONRY

Masonry shall be designed and constructed in accordance with the provisions of Building Code Requirements for Masonry Structures, ACI 530/ASCE 5/TMS 402, latest editions. Mortar shall be Type S and conform to ASTM C 270, latest edition. Masonry shall not be used below grade, unless for fully grouted and reinforced foundation stem walls. All cells of exterior reinforced CMU walls shall be fully grouted. For interior CMU walls, only the reinforced cells need to be grouted.

## 4.9 STRUCTURAL STEEL

Structural steel shall be designed and constructed in accordance with the provisions of American Institute of Steel Construction (AISC), Specifications for Structural Steel Buildings, 9th Edition. Design of cold-formed steel structural members shall be in accordance with the provisions of American Iron and Steel Institute (AISI), Specifications for Design of Cold-Formed Steel Structural Members.

## 4.10 OPEN WEB STEEL JOIST

Open web steel joists shall conform to SJI Specifications and Tables. Joists shall be designed to support the loads given in the standard load tables of SJI Specifications and Tables.

## 4.11 FOUNDATIONS

Foundations shall be in accordance with the Geotechnical requirements of this RFP.

## 4.12 EARTHWORK AND FOUNDATION PREPARATION

### 4.12.1 Capillary Water barrier

ASTM C 33 fine aggregate grading with a maximum of 3 percent by weight passing ASTM D 1140, 75 micrometers, No. 200 sieve, or 37.5mm and no more than 2 percent by weight passing the 4.75mm No. 4 size sieve and conforming to the soil quality requirements specified in the paragraph entitled “Satisfactory Materials.”

### 4.12.2 Satisfactory Materials

Any materials classified by ASTM D 2487 as GW, GW-GM, GW-GC, SW, SW-SM, or SW-SC and free of debris, roots, wood, scrap material, vegetation, refuse, soft unsound particles, or objectionable materials. Unless specified otherwise, the maximum particle diameter shall be one-half the lift thickness at the intended location.

### 4.12.3 Unsatisfactory Materials

Any materials which do not comply with the requirements set forth in the Satisfactory Materials paragraph. Unsatisfactory materials also include man-made fills, trash, refuse, or backfills from previous construction. Unsatisfactory material also includes material classified as satisfactory which contains root and other organic matter, frozen material, and stones larger than 75mm. The Contracting Officer shall be notified of any unsatisfactory materials.

### 4.12.4 Clearing and Grubbing

Unless indicated otherwise, remove tress, stumps, logs, shrubs, brush and vegetation, and other items that would interfere with construction operations within lines 1.5 meters outside of the building and structure line. Remove stumps entirely. Grub out matted roots and roots over 50mm in diameter to at least 460mm below existing surface.

#### 4.12.5 Stripping

Strip suitable soil from the site where excavation or grading is indicated and stockpile separately from other excavated material. Material unsuitable for use as topsoil shall be stockpiled and used for backfilling. Locate topsoil so that the material can be used readily for the finished grading. Where sufficient existing topsoil conforming to the material requirements is not available on site, provide borrow materials suitable for use as topsoil. Protect topsoil and keep in segregated piles until needed.

#### 4.12.6 Excavation and Compaction of Fill

Excavate to contours, elevation, and dimensions indicated. Reuse excavated materials that meet the specified requirements for the material type required at the intended location. Keep excavations free from water. Excavate soil disturbed or weakened by Contractor's operations, soils softened or made unsuitable for subsequent construction due to exposure to weather. Excavations below indicated depths will not be permitted except to remove unsatisfactory material. Unsatisfactory material encountered below the grades shown shall be removed as directed. Refill with satisfactory material and compact to at least 95 percent of the maximum dry density, as determined by the Modified Proctor laboratory procedure. ASTM D 1557 shall be used for producing the Modified Proctor moisture-density curve, unless the soil to be compacted includes more than 30% retained on the 19 mm (3/4") sieve. In this case, the Contractor must replace the ASTM D 1557 laboratory compaction procedure with AASHTO T 180, Method D, corrected with AASHTO T 224.

During compaction, the moisture content of the soil shall be within 1.5 percent of the optimum moisture content, as determined by the Modified Proctor laboratory procedure. The thickness of compacted lifts shall not exceed 15 cm and the dry density of each compacted lift shall be tested by either sand cone (ASTM D 1556) or nuclear gage (ASTM D 2292). If the nuclear gage is used, it must first be compared to sand cone tests for each soil type to verify the accuracy of the nuclear gage measurements for moisture content, wet density, and dry density. Furthermore, every tenth nuclear gage test must be accompanied by a sand cone test and these verification data must be summarized and submitted to the Contracting Officer. Density tests shall be performed at a frequency of not less than one test for each 200 square meters and not less than two tests per compacted lift.

#### 4.12.7 Structures with Spread Footings

Ensure that footing sub-grades have been inspected and approved by the Contracting Officer prior to concrete placement. Fill over excavations with concrete during foundation placement.

## 5.0 GEOTECHNICAL

### 5.1 SOIL INVESTIGATION

The foundations shall be constructed using reinforced concrete materials as shown on the drawings and stated in the specifications. A bearing capacity of 0.75 kg/sq. cm was assumed and used in designing the building foundations. The contractor is responsible for performing a geotechnical investigation to determine if the assumed bearing capacity and foundations as shown and designed will perform satisfactory. The maximum allowable settlement between footings shall be less than 25 mm. If the contractor determines, after completing his geotechnical investigation, that the foundations as designed will not perform satisfactory, the contractor shall redesign the foundations accordingly. The contractor is responsible for the design and construction of the foundations.

The Contractor shall develop all pertinent geotechnical design and construction parameters by appropriate field and laboratory investigations and analyses. The Contractor shall produce a detailed geotechnical report containing field exploration and testing results, laboratory testing results (particle sizes and distribution, liquid and plastic limit test, and moisture and density test, etc.). Information in the report shall include, but not limited to: existing geotechnical (e.g. surface and subsurface) conditions,

location of subsurface exploration logs on site plan, exploration point, allowable soil bearing capacity and foundations recommendations, bearing capacity, pavement design criteria (e.g. CBR values, K values), ground-water levels, and construction materials (e.g. concrete cement, asphalt, and aggregates). Two copies of the detailed geotechnical report shall be submitted to the Contracting Officer.

### 5.2 GEOTECHNICAL QUALIFICATIONS

A geotechnical engineer or geotechnical firm responsible to the Contractor shall develop all geotechnical engineering design parameters. The geotechnical engineer or geotechnical firm shall be qualified by: education in geotechnical engineering; professional registration; and a minimum of ten (10) years of experience in geotechnical engineering design.

## 6.0 MECHANICAL

### 6.1 GENERAL

The work covered by this section consists of supply, fabrication and installation of new building heating and ventilation (HV) systems. It also includes the delivery to site, erection, setting to work, adjusting, testing, balancing and handing over in perfect operating and running condition all of the HV equipment including all necessary associated mechanical works.

### 6.2 SPECIALIST SUB-CONTRACTORS QUALIFICATIONS

The heating and ventilation work shall be executed by an air-conditioning specialist sub-contractor experienced in the design and construction of HV equipment to include electric resistance heaters, wood burning heaters and ceiling fans in satisfying the specified indoor design conditions. HV equipment will normally consist of electric unit heaters, wood burning heaters, air ventilation systems and specialized industrial ventilation systems.

### 6.3 CODES, STANDARDS AND REGULATIONS

The equipment, materials and works covered under the heating and ventilation services shall conform to the referenced standards, codes and regulations where applicable except where otherwise mentioned under each particular clause.

### 6.4 NOISE LEVEL

Noise levels inside occupied spaces generated by HVAC systems shall not exceed NC 35

### 6.5 NEW HEATING EQUIPMENT

Environmental control of the facilities shall be achieved by heating equipment as listed below and approved by the U.S. Government.

#### 6.5.1 ELECTRIC HEATERS

##### 6.5.1.1 Unit Heater

Electric resistance unit heaters shall be installed in spaces where only heating is required. Generally, unit heaters shall be mounted as high as possible. Unit heaters shall be of the industrial grade, very durable and securely fastened to the ceiling, wall or structure. Provide a self-contained electric heating unit, suspended from ceiling or structure, with fan and heating elements. Provide control-circuit terminals and single source of power supply with disconnect. Heating wire element shall be nickel chromium. Include limit controls for overheat protection of heaters. Provide tamper resistant integral thermostat.

##### 6.5.1.2 Cabinet Heater

Use of cabinet heaters shall be limited to spaces requiring heating and is not subject to misuse or abuse. Use of cabinet heaters is allowed only as directed by the User. Provide a self-contained electric heating unit, recessed mounted in wall or structure, with fan and heating elements. Provide control-circuit terminals and single source of power supply with disconnect. Heating wire element shall be nickel chromium. Include limit controls for overheat protection of heaters. Provide tamper resistant integral

thermostat.

**6.5.1.3 Submittals**
The Contractor shall submit the following for the equipment to be provided under this section of the specification: manufacturer's data including performance characteristics at design conditions; manufacturer's certificate stating that each unit will perform to the conditions stated, catalog cuts showing dimensions, performance data, electrical requirements, compliance with standards as stated in paragraph CODES, STANDARDS AND REGULATIONS; complete shop drawings indicating location and installation details.
The manufacturer shall also submit a 2 year warranty for each of the units.

**6.5.1.4 TEST ON COMPLETION**

6.5.1.5 After completion of the work, the Contractor shall demonstrate to the Contracting Officer that the HVAC installation is adjusted and regulated correctly to fulfill the function for which it has been designed. The Contractor shall test, adjust, balance and regulate the section or sections of concern as necessary until the required conditions are obtained. Operational test shall be conducted once during the winter and once during the summer. Coordinate with the Contracting Officer on when the test shall be scheduled. Include tests for all interlocks, safety cutouts and other protective device to ensure correct functioning. All such tests shall be carried out and full records of the values obtained shall be prepared along with the final settings and submitted to the Contracting Officer in writing.

6.5.1.6 The following tests and readings shall be made by the Contractor in the presence of the Contracting Officer and all results shall be recorded and submitted in a tabulated form.

a. Ambient DB and WB temperatures
b. Room Inside Conditions:
    1. Inside room DB & WB temperatures
    2. Air flow supply, return and/or exhaust
    3. Plot all temperatures on psychrometric chart
c. Air Handling Equipment: Air quantities shall be obtained by anemometer readings and all necessary adjustments shall be made to obtain the specified quantities of air indicated at each inlet and outlet.
    Following readings shall be made:
    1. Supply, return and outside air CMH (CFM) supplied by each air conditioning system.
    2. Total CMH (CFM) exhausted by each exhaust fan
    3. Motor speed, fan speed and input ampere reading for each fan
    4. Supply, return and outside air temperature for each air-conditioning system.
d. Electric Motors:
    For each motor: (1) Speed in RPM
    (2) Amperes for each phase
    (3) Power input in KW

**6.6 WOOD STOVE SPACE HEATING :**
Wood burning space heaters shall be furnished by others and is not in this contract. Wood burning space heaters shall meet the following requirements. Provide Cast Iron stoves, minimum cast iron wall thickness shall be 5mm. Install with adequate clearances per manufactures installation guide. Route the chimney runs inside the building envelope (inside the heated space) so air and flue gases stay at least as warm as the air in the building until they are expelled outside. The minimum flue thickness shall be no less than 1.5mm black steel. The chimney shall penetrate the highest part of the building envelope so the chimney functions better. The chimney shall rise at least 60 cm (24 inches) above the roof ridge and its top is clear of obstacles to wind flow so it can produce stable draft and it has a chimney (rain) cap because without one any chimney is vulnerable to adverse wind pressures. The chimney flue shall be insulated and be the correct size for the appliance so flue gases are kept warm and flow quickly through the system. The flue pipe, if used, shall run straight up from the appliance to the chimney and the chimney has no offsets because each change in direction presents resistance to flow. The appliance

and venting system shall be reasonably well-sealed to prevent leaks that introduce cool air and make the system more vulnerable to adverse pressures. The stove shall be certified for low smoke emissions or have equivalent characteristics so it is unlikely to smolder. The system shall be installed in a building that has a balanced ventilation system. There shall be no exhaust fan in the stove exhaust.

6.6.1 Submittals.

The Contractor shall submit the following for the equipment to be provided under this section of the specification: manufacturer's data including performance characteristics at design conditions; catalog cuts showing dimensions, performance data; drawings indicating location and installation details.

## 6.7 VENTILATION AND EXHAUST SYSTEMS

All fans shall be used for building ventilation and pressurization with capacities to be selected for minimum noise level generated. Unit mounted fans either used for supply or exhaust shall be centrifugal forward curved, backward inclined, or airfoil fans with non-overloading characteristics of high efficiency and quiet running design. The fans shall be of the heavy-duty type with durable construction and proved performance in a desert environment. Each exhaust fan shall be provided with motorized or gravity dampers which close automatically when the fan is not running. Also, each fan shall be complete with vibration isolator, external lubricators, and all accessories and sound attenuators as necessary.

Supply intake openings shall be provided with motorized dampers which are interlocked with the exhaust fan. The dampers open or close when the exhaust fan is on or off respectively.
Exhaust fans shall be centrifugal wall mounted type. Intake openings shall be provided with motorized dampers which are interlocked with the exhaust fans. The systems shall consist of centrifugal fan, ductwork, exhaust grills, and interlock controls. Comply with Industrial Ventilation UFC 3-410-04N.

Toilet and Wash Area: Minimum exhaust ventilation shall be the largest of 35 m3/h / m2 floor or 85 m3/h / toilet (WC). At extreme cold in winter these values can be reduced for short periods to 10 m3/h / m2 or 40 m3/h / toilet (WC) to conserve heat.

### 6.7.1 Kitchen Hood Exhaust and Make-up Air

As required and as per Kitchen design specialist and equipment supplier requirements. Exhaust flow rate shall be a minimum of 400 cfm per linear foot of hood length. The air velocity in the exhaust duct shall be limited to 1500 feet per minute. The designer shall take special note that multiple large propane stoves will be installed in the kitchen. The steam generated by the local style of cooking with large pots is immense in comparison to western standards, and the additional need for ventilation must be accounted for in the design. Also, the cooks are accustomed to standing on top of the stoves in order to stir the large cauldrons of food. This common cooking practice should be taken into consideration when designing the exhaust hood. The height of the hood above the stovetop should be such that a man of average stature could stand upright without risk of hitting his head on the hood. Design per NFPA 92A, 96, 204, and 211. Make up air intake shall be integral with the hood system or be located as close to the exhaust intake to prevent cold drafts. Non-integral makeup air shall be tempered within ten degrees of ambient air temperature.

To reduce sand and dirt migration, outside air intakes shall be located as high as possible within architectural constraints. The intakes shall be sized so that free air velocities are below 2.5 m/s (500 fpm). For inhabited buildings locate all air intakes at least 1.5 (center-line of intake) meters above the ground. Each air intake shall be provided with a motorized damper which is interlocked with the exhaust fan.

### 6.7.2 Submittals

The Contractor shall submit the following for the equipment to be provided under this section of the specification: manufacturer's data including performance characteristics at design conditions; catalog cuts showing dimensions, performance data, electrical requirements, compliance with standards as stated in paragraph CODES, STANDARDS AND REGULATIONS; drawings indicating location and installation details.

## 6.8 CEILING FANS

### 6.8.1 Ceiling Fan

Provide 1320mm blade ceiling fans at one per 40 square meters of floor space. Fans shall have reversible motors. Center or distribute evenly in room. Coordinate placement with the lighting plan to prevent conflict or casting shadows. Fan mount shall be flush, standard, or angle mount depending on ceiling height. Fan shall be mounted such that the fan blade is approximately 2.44 meters above the finished floor. The fan shall be provided with out light kit. The finish shall be factory painted white. The controls shall be from either a single pole switch or from two 3 way switches to provide on/off operation. The electrical supply shall be 230volts, single phase, and 50 hertz. Install per manufacturers' instructions.

**6.8.2 Oscillating Wall Fans.** Provide 460 mm diameter wall fans as shown on plans. Coordinate placement with the lighting plan to prevent conflict or casting shadows. Fan mount shall be painted steel wall bracket and mounted such that the fan blade is approximately 2,100 mm above the finished floor. The finish shall be factory painted white. The controls shall be from either a single pole switch or from two 3 way switches to provide on/off operation. The electrical supply shall be 220 volts, single phase, and
50 hertz. Install per manufacturers' instructions.

6.11.3 Submittals.
The Contractor shall submit the following for the equipment to be provided under this section of the specification: manufacturer's data including performance characteristics at design conditions; catalog cuts showing dimensions, performance data, electrical requirements, compliance with standards as stated in paragraph CODES, STANDARDS AND REGULATIONS; drawings indicating location and installation details.

## 6.8 PROPANE COOKING STOVE

Cooking area shall be provided canopy type exhaust only kitchen hoods and associated exhaust fans. These exhaust hoods shall include baffle type aluminum filters to trap grease/oil. The exhaust fan sizing calculations should recognize the use of propane stoves in the kitchen. Sizing should accommodate all propane burning stoves running simultaneously. Additionally, the placement of the exhaust hood should allow enough clearance for an average sized male to stand on top of the stove platform unobstructed, for standing on the stove is common local cooking practice. The higher than average placement of the hood will require the extension of the lip of the hood out further than normal, in order to catch the majority of the smoke and adequately vent the area. Propane tank shall be located out the DFAC covered in the fenced storage yard
New propane stoves shall be installed with consideration to ease of cooking operation and daily cleanup. The new propane stoves shall be set into a formed concrete opening such that it can easily be removed for replacement, maintenance and cleaning.

Each propane stove shall be provided with three burners. The propane stoves shall be of commercial quality and be capable of producing the highest BTU heat output with all three burners on. The center burner is low heat, center and middle burner is medium heat and all three burners is high heat. A shut off valve for each burner shall be provided at the face of the propane appliance.

Piping from the propane tanks to the respective propane stoves shall be wrought iron, ASTM B36.10M or steel (black or galvanized), ASTM A53. The steel piping shall terminate in front of the propane stoves with a shut off valve and quick disconnect nipple. A stainless steel flexible hose shall connect from the propane stove to the steel piping. Each end of the flexible hose shall be provided with quick disconnect fittings.
The propane piping shall not be embedded in the concrete floor. Installation of the propane piping in concrete trenches is highly recommended. The piping may be surface mounted provided that it is not susceptible to damage or causes any safety hazards.
Piping passing through the exterior wall shall be provided with pipe sleeves.

### 6.8.1 Propane Fuel Storage/Distribution

Propane Storage and Distribution shall be provided to support operation of the propane stoves for cooking and boiling tea. The bulk storage of fuels shall consist of above-ground horizontal steel tanks sized to store a 30 day supply of fuel. These tanks shall be complete with fill fittings, tank gauge, vent, and other fittings and appurtenances required for full and safe operation. Tanks shall be provided with support saddles, platform/stair and concrete pad. Bulk storage capacity shall be based on minimum four-week full load operation of the kitchen. Metal fuel tank saddles should not be placed directly on fuel containment area slabs. They should be elevated on piers to avoid moisture corrosion. Propane storage tanks shall be provided and installed in accordance with NFPA 58. The propane storage tanks shall be installed on a concrete pad, and provided within an enclosure to protect the tanks from the elements. For locations where bottled propane fuel is preferred, coordinate with the COR.
The propane fuel capacity shall be based on frequency of cooking, consumption of fuel every cooking cycle, frequency and availability of replacement fuel tanks and spare capacity. This project will require that the Contractor provide the following capacity of propane fuel. Assumptions made in determining the fuel capacity are:

a. 9 hours cooking operation 7 days a week
b. 90,000 BTUH for each range
c. 25% spare capacity
d. 1 story HQs building contains 2 ranges and the 2 story HQs building contains 3 ranges.

1 Story HQ Building – 640 gallons (2423 liters)
2 Story HQ Building – 960 gallons (3634 liters)

Provide chain link fence and gates around entire propane storage facility. Fence shall match perimeter Force protection fence with lockable gates, and concertina wire etc. Provide fuel filling system for unloading fuel from fuel tanker into individual bulk storage tanks comprising of truck pad(s), duplex fuel transfer pumps, piping manifold and valves as required for a complete system.

### 6.9 WOOD COOKING STOVE

Provide a separate wood burning cooking stove kitchen annex building within the DFAC yard with commercial grade wood fired cooking stoves. The floor shall be sealed concrete. Provide a trench drain that extends the length of the cooking line-up for cleaning purposes. The cooking stove tops shall be accessible by stairs for walking on top of the stoves and the stove tops wide enough for a person to walk on. The hood height shall not interfere with a person standing on the stove top. The ceiling of the annex shall not be less than 3 meters high to allow smoke and/or heat to be ventilated outside of the building. This can be accomplished with exhaust fans and clerestory window designs.

This annex shall be separated from the main kitchen by a covered walkway.

Provide a covered wood storage area next to the annex which shall be secured and surrounded with fencing as to prevent pilfering. Gates and locks shall be provided as part of the security.

Stove shall be constructed out of fire bricks and toped with 5mm thick cast iron countertop. Route the chimney runs inside the building envelope (inside the heated space) so air and flue gases stay at least as warm as the air in the building until they are expelled outside. The minimum flue thickness shall be no less than 1.5mm black steel. The Contractor shall protect chimney by means of metal rails or masonry wall from damage from large pots during cooking. The chimney shall penetrate the highest part of the building envelope so the chimney functions better. The chimney shall rise at least 60 cm (24 inches) above the roof ridge and its top is clear of obstacles to wind flow so it can produce stable draft and it has a chimney (rain) cap because without one, any chimney is vulnerable to adverse wind pressures. The chimney flue shall be insulated and be the correct size for the appliance so flue gases are kept warm and flow quickly through the system. The flue pipe, if used, shall run straight up from the appliance to the chimney and the chimney has no offsets because each change in direction presents resistance to flow. The appliance and venting system shall be reasonably well-sealed to prevent leaks that introduce cool air and make the system more vulnerable to adverse pressures. The system shall be installed in a

building that has a balanced ventilation system. There shall be high exhaust fan in the stove exhaust hood. The Wood stove kitchen shall be well vented with louvers located high at walls on the building ends. The wood feeding doors shall be located on the outside of the building. Contractor must submit shop drawings for approval.

**6.10 OPERATIONS AND MAINTENANCE (O&M) FOR MECHANICAL**

(a) Contractor is required to provide a 12 month supply of parts for operation and maintenance of equipment according to the manufacturer's recommendations. In addition to this, the contractors shall provide an inventory of all items, location/address stored and secured, and commissioning plans.

(b) The O&M manuals must be provided prior to any training activities. Manuals shall be "tri-lingual" in Dari, Pashto and English.

(c) All control panels shall have tri-lingual name plates in Dari, Pashto and English.

(d) The contractor shall provide an outline of the training lesson plan (to be approved by the Government) prior to conducting training. CD recordings of training on video shall also be provided, after training is conducted.

## 7.0 PLUMBING

### 7.1 SCOPE OF WORK.

#### 7.1.1 General

The Contractor shall construct domestic cold and hot water systems, waste, drain and vent systems, and fuel-oil storage and distribution systems required in the facilities identified in Section 1010 Scope of Work and as described herein. The Contractor shall also be responsible for complete design and construction of all domestic and special plumbing systems required for full and safe operations in the Generator Plant, Water Storage and other facility or structures required in this contract.

The work covered in this scope also includes the delivery to site, erection, setting to work, adjusting, testing and balancing and handing over in full operating condition all of the plumbing equipment and associated plumbing works.

#### 7.1.2 Sub-Contractors Qualifications

The plumbing systems shall be executed by a plumbing specialist subcontractor experienced in the design and construction of these types of systems.

#### 7.1.3 Standard Products

All materials and equipment shall be standard product of a manufacturer regularly engaged in the manufacture of the product and shall duplicate items that have been in satisfactory use for at least two (2) years prior to bid opening.

### 7.2 CODES, STANDARDS AND REGULATIONS

The design and installation of equipment, materials and work covered under the plumbing services shall conform to the following standards, codes and regulations where applicable except where otherwise indicated under particular clause(s). The publications to be taken into consideration shall be those of the most recent editions. Standards other than those mentioned herein may be accepted provided that the standards chosen are internationally recognized and meet the minimum requirements of the specified standards. The Contractor shall submit proof of equivalency if requested by the Contracting Officer.

IPC – International Plumbing Code

NFPA - National Fire Protection Association

ASHRAE – American Society of Heating, Refrigeration and Air-Conditioning Engineers

ASME – American Society of Mechanical Engineers

ASTM – American Society for Testing and Materials

AWS – American Welding Society

## 7.3 PLUMBING SYSTEMS REQUIREMENTS

### 7.3.1 Water

Domestic cold and hot water shall be provided in the facilities to serve the water usage and plumbing fixtures provided for the facility. Water service to each facility shall enter the building in a mechanical, toilet, storage, or similar type space. The building service line shall be provided with a shut off valve installed either outside in a valve pit or inside the mechanical room or similar spaces. Water piping shall not be installed in or under the concrete foundation. All water piping shall be routed parallel to the building lines and concealed in all finished areas. Insulation shall be provided where required to control sweating of pipes or to provide protection from freezing.

### 7.3.2 Piping Materials

Domestic water shall be distributed by means of standard weight (schedule 40) galvanized steel pipe, Polyethylene (PE) plastic pipe (schedule 40 or 80). Waste and vent piping can be made of either galvanized steel pipe (schedule 40), or Polyvinyl Vinyl Chloride (PVC) conforming to ASTM D 2665. Corrosion protection shall be provided if galvanized piping comes in contact with earth or masonry floors, walls or ceilings.

### 7.3.3 Plumbing Fixtures

The following typical plumbing fixtures shall be provided:

a. Eastern Water Closet with flush tank assembly. Provide acid resisting fired porcelain enameled cast iron water closet complete with rotating No-Hub 'P' trap and No-Hub coupling to meet piping requirements. Eastern Style water closet shall be furnished with integral non-skid foot pads and bowl wash down non-splashing flushing rim. The water closet shall be completely self supporting requiring no external mounting hardware and shall be flush with floor. The Eastern Style water closet shall incorporate waterproofing membrane flashing flange. Provide a cold water spigot 300mm above finished floor on the right (from a perspective of standing inside of the cubicle and looking out) sidewall of the cubicle. Spigot shall have a flexible hose and spray nozzle such that the occupant can wash over the water closet. Toilets shall be oriented north and south. Toilets shall not face east or west.
   Western style toilets shall be provided as requested by the User.

b. Lavatories. All sinks shall be trough type constructed of block and concrete with ceramic tile exterior and lining capable of withstanding abuse. Provide maintenance access to waste piping and P-traps from under the sink. Lavatories inside the prison cells shall be tamper-proof with integral spout, soap depression, and outlet connection to slip 40mm OD tubing.

c. Sink Faucets. Sink Faucets. LN faucets shall be vandal proof, heavy duty cast brass with chrome plating with separate hot and cold water valves for manual mixing. Faucet handles shall be cast brass alloy with chrome plating.

d. Janitor’s Sink. Floor mount janitor, enameled cast iron with copper alloy rim guard. Provide hot and cold water valves with manual mixing. Faucet handles shall be cast brass alloy with chrome plating. Include a stainless steel shelf and three mop holders.

e. Shower. Showerhead and faucet handles shall be vandal proof, heavy duty cast brass with chrome plating for the LN facilities and regular cast brass chrome plated for coalition facilities. Provide hot and cold water valves for manual mixing. In addition to a shower head, provide each shower stall with a threaded faucet approximately 1.2 m AFF with hot and cold-water controls, mixing valve and a diverter type valve so water can be directed to either the shower or to the lower faucet. Shower shall be provided with low flow shower head. The shower head shall be heavy duty type and securely fastened to the wall.

f. Emergency Shower and Eye Wash Assembly. Provide emergency shower and or eye wash assembly in Power Plant and in other facilities where appropriate. Provide a floor drain in the area, if appropriate (where emergency water flowing on the floor may lead to additional safety or operational complications).

g. Service Sink. Standard trap type, enameled cast iron. Service sinks provided in maintenance areas shall be metallic, and in battery rooms acid resistant.

h. Kitchen Sink. Single bowl shall be corrosion resisting formed steel. Faucet bodies and spout shall be cast or wrought copper alloy. Handles, drain assembly, and stopper shall be corrosion resisting steel or copper alloy.

i. Ablution Trench. See building floor plans for size and construction of trench and number of stations. Provide trench drain with brass grating and strainer. Provide each station with hot and cold water valves with manual mixing. Faucet handles shall be copper alloy.

j. Grease Interceptor. Shall be steel construction manual cleaning type with removable checker-plate cover complete with flow control valve. Tested and rated in accordance with PDI G-101. Concrete shall have a minimum compressive strength of 21 MPa (3045 psi) in 28 days (kitchen use only).

k. Floor Sink (P-13). Provide floor sink, circular or square, with 300mm overall width or diameter and 250mm nominal overall depth. They shall have acid resistant enamel interior with cast iron body, aluminum sediment bucket and perforated grate of cast iron. Outlet size as indicated on plans.

l. Floor or Shower Drain: Cast iron construction with galvanized body, integral seepage pan, and adjustable perforated or slotted chromium plated bronze, nickel-bronze, or nickel brass strainer consisting of a grate and threaded collar. Toilet room floor drains are similar except are provided with built-in, solid, hinged grate.

m. Trench Drains: Floor trench shall be concrete construction with a cast iron grate. The cast iron grate shall be sectionalized and hinged so that it can easily be opened to clean out the trench. The floor trench shall be provided with perforated aluminum pan inserts which can be removed to clean out large food particles. The floor trench drain shall be adjustable perforated or slotted chromium plated bronze, nickel-bronze, or nickel brass strainer consisting of a grate and threaded collar. This style of floor trench shall be installed in the kitchen area of the DFACs in response to kitchen cleaning practices of the local national staff.

n. Room hose bibs and floor drains shall be provided as required. Afghan dining facility kitchen area clean-up hose bib to be supplied with connecting hose on reel including approximately 12 meters of hose. Provide clean-up spray nozzle with hose assembly.

o. Provide P-Traps per International Plumbing Code IPC for all fixture drains, floor and trench drains, and shower drains. P-traps shall have minimum of 50 mm water seal.

p. Large Pot sink, provide clean-up spray nozzle with hose assembly.

**7.3.4 Hot Water**

Hot water shall be provided for the facility to supply 49°C (120°F) hot water to fixtures and outlets

requiring hot water. Hot water of a higher temperature shall be provided only where required for special use or process. Hot water piping shall be routed parallel to the building lines and concealed within finished rooms. All hot water piping shall be insulated. A hot water re-circulating pump shall be provided if hot water piping run exceeds 30m.

### 7.3.5 Hot Water Heaters

The hot water shall be generated by electric water heaters. The unit(s) shall be typically located inside a mechanical room, storage room, toilet/janitor room or similar type space. The unit(s) shall be of the commercially available tank type having low or medium watt density electric heating elements. The discharge piping from the temperature and pressure relief valve shall be piped down to the floor and terminate approximately 25 cm (1 inch) from the finish floor. Any discharged water shall drain to the nearest floor drain.

In cases where the pressure of the water coming into the tank will violate manufacturer recommendations, a pressure reducer shall be installed in the line before the water heater. Also, all water heaters shall be equipped with a blow-off valve that will empty into a nearby floor drain or to the exterior of the building.

## 7.4 WASTE, DRAIN AND VENT SYSTEM

Floor drains shall be provided in each room that contains a water source. Floor drains shall be provided in the mechanical equipment and toilet rooms as required. Floor drains shall be provided next to the electric water heaters. In mechanical rooms, floor drains shall be provided to avoid running drain piping long distances above or over the floor. A trench drain shall be provided for the DFAC Kitchen. All waste and vent piping shall be provided in accordance with the latest edition of IPC. Drain outlet shall use p-trap system to trap sewer gases. P-trap drain should be a one-piece system without removable parts. Every trap and trapped fixture shall be vented in accordance with the IPC. IPC Section 708.3 states that cleanouts be provided no more than 100 feet apart measured from the upstream entrance of the cleanout. AED standard is to provide cleanouts at 25 feet intervals due to the nature of Afghans plugging up the drains and the limitation of the cleanout routers available in Afghanistan.

## 7.5 SPECIAL PLUMBING SYSTEMS

Contractor shall design and construct fuel-oil storage and distribution other plumbing systems that are required for full performance of equipment and operations and for maintenance in the Power Plant. These systems shall be designed and built in accordance with codes and publications referenced herein before and in compliance with equipment manufacturer recommendations.
acceptable db limits.

### 7.5.1 Generator Fuel Storage/Distribution

Fuel Oil Storage and Distribution shall be provided to support operation of diesel engine generators at the Power Plant, emergency generators and other locations. The bulk storage of fuels shall consist of above-ground horizontal steel tanks sized to store a 30-day supply of fuel, with containment dikes. These tanks shall be complete with fill tube and cap, suction tube, tank gauge, vent, and other fittings and appurtenances required for full and safe operation. Tanks shall be provided with support saddles, platform/stair and concrete pad. Fuel shall be transferred from the bulk storage tanks by duplex transfer pumps into individual day tanks. Fuel piping shall be fiberglass for underground and steel for piping located above grade. Bulk storage capacity shall be based on minimum four-week full load operation of the plant. Metal fuel tank saddles should not be place directly on fuel containment area slabs. They should be elevated on piers to avoid moisture corrosion. Fuel containment area should have a sump or manually controlled water release valves for water removal.

#### 7.5.1.1 Filling System

Provide fuel filling system for unloading fuel from fuel tanker into individual bulk storage tanks comprising of truck pad(s), duplex fuel transfer pumps, piping manifold and valves. The system shall provide remote fuel level monitoring panels at the pad(s).

## 7.6 TESTING AND COMMISSIONING

The Contractor shall test all piping systems in accordance with IPC International Plumbing Code. The final test shall include a smoke test for drainage and vent system and pressure test for the domestic water piping. After completing the work, the Contractor shall demonstrate that all plumbing systems operate to fully satisfy the function for which these systems have been designed. The Contractor shall test, adjust, balance and regulate the system and its controls as necessary until the required designed conditions are met. The Contractor shall include tests for interlocks, safety cutouts and other protective devices to demonstrate safe operation. All such tests shall be carried out in the presence of the Contracting Officer and full written records of the test data and final settings shall be submitted to the Contracting Officer. After all tests are complete, the entire domestic hot and cold water distribution system shall be disinfected. The system shall not be accepted until satisfactory bacteriological results have been obtained.

## 8.0 FIRE PROTECTION

### 8.1 GENERAL

Facility construction and fire protection systems shall be installed in accordance with the publications listed herein and the publications referenced therein. Where a conflict occurs among various criteria, the more stringent requirement shall take precedence.

### 8.2 BUILDING CONSTRUCTION

Building construction shall conform to fire resistance requirements, allowable floor area, building height limitations and building separation distance requirements of the building code.

### 8.3 LIFE SAFETY

Facilities features will be provided in accordance with NFPA 101, among other references, to assure protection of occupants from fire or similar emergencies.

### 8.4 FIRE PROTECTION EQUIPMENT

All fire protection equipment shall be listed by Underwriters' Laboratories (UL) or approved by Factory Mutual (FM) or equivalent and shall be listed in the current UL Fire Protection Equipment Directory or Factory Mutual Approval Guide or equivalent.

### 8.5 FIRE DETECTION AND ALARM SYSTEM

Smoke detection – see electrical section for more fire alarm and detection details. Smoke detectors are required for each building. Smoke detectors shall have back up battery power and be installed according to all applicable fire protection codes. Fire detection and alarm systems shall be provided as required by NFPA 101, NFPA 72 and UFC 3-600-01 and listed herein. Required fire detection and alarm systems shall be designed and installed in accordance with NFPA 72. Fire alarm control panel (FACP) shall be conventional type and located in the corridor of the main entrance. Smoke detectors are required in the sleeping rooms and corridors; they shall not be located in the kitchen, pantry and dining rooms.

### 8.6 WATER SUPPLY FOR FIRE PROTECTION

No sprinkler protection is required for this project.

### 8.7 PORTABLE FIRE EXTINGUISHERS

Portable fire extinguishers shall be provided inside all facilities and at exterior locations as required in accordance with NFPA 10. Generally, extinguishers will be of the multi-purpose dry chemical type except for occupancies requiring a special type extinguisher (e.g., carbon dioxide portable fire extinguishers for electrical rooms).

## 9.0 ELECTRICAL

### 9.1 GENERAL

Contractor shall design and construct all electrical systems for the facilities to be provided. This includes

design, construction, all necessary labor, equipment, and material for a fully functional system.

## 9.2 DESIGN CRITERIA

### 9.2.1 Applicable Standards

a. Design shall be in the required units as stipulated herein.
b. Conflicts between criteria and/or local standards shall be brought to the attention of the Contracting Officer for resolution. In such instances, all available information shall be furnished to the Contracting Officer for approval.
c. All electrical systems and equipment shall be installed in accordance with the requirements set forth in the documents referenced herein.
d. Acceptance Testing: Contractor shall develop and submit for approval complete acceptance test procedures on all systems provided. As a minimum the testing procedures shall comply with the requirements of the National Fire Protection Association (NFPA) and the International Electrical Testing Association Inc. (NETA).

## 9.3 MATERIAL

### 9.3.1 General

Unless noted otherwise, all material used shall be in compliance with the requirements of UL standards. In the event that UL compliant materials are not available, Contractor may then select applicable British Standards (BS), IEC, CE, CSA, GS, DIN listed material (or equivalent), but the contractor must prove equivalence and must provide the government with a full copy of the relevant specification(s)/standard(s). Material and equipment installed under this contract shall be for the appropriate application and installed in accordance with manufacturers recommendations.

Equipment enclosure types shall be in compliance with the National Electrical Manufacturer's Association (NEMA) or the International Electro-Technical Committee (IEC) standards.

Major components of equipment shall have the manufacturer's name, address, type or style, voltage and current rating, and catalog number on a non-corrosive and non-heat sensitive plate, securely attached to the equipment. All equipment delivered and placed in storage, prior to installation, shall be protected from the weather, humidity and temperature variation, dirt and dust, and any other contaminants. All equipment shall be in new condition, undamaged and unused.

### 9.3.2 Standard Product

All material and equipment shall be a standard product of a manufacturer regularly engaged in the manufacture of the product and shall essentially duplicate items that have been in satisfactory use for at least two (2) years prior to bid opening.

### 9.3.3 Design Conditions

All equipment shall be rated and designed for the maximum ambient temperature and altitude of the construction site. Equipment that is altitude and temperature sensitive, such as generators, shall be derated according to the manufacturer’s recommendations. Generic derating criteria for altitude and for ambient temperature may be used to approximate the required size of such equipment during the design phase, but a stipulation shall be placed on the construction plans to adjust the size according to the derating criteria specific to the manufacturer’s equipment chosen before the equipment is ordered.

### 9.3.4 Restrictions

Aluminum conductors shall not be specified or used. Aluminum windings shall not be used in transformers.

## 9.4 DESIGN REQUIREMENTS

### 9.4.1 Electrical Distribution System

Provide generator power as described in the paragraph **Generator Power System** as a prime source.

The contractor shall provide a prime power distribution system to distribute power to the site's facilities and other loads as required. The distribution system shall be underground.

The underground distribution system shall be in concrete encased ductbanks with the ducts not less than 1220mm below grade. Manholes and handholes shall be provided at changes of direction of more than 40 degrees and elsewhere as required to limit the pulling tension and sidewall pressure on the cables during installation to acceptable levels as defined by the cable manufacturer. Manholes shall be provided for ductbanks with more than 2 ducts. Handholes shall be provided wherever a manhole is not required by quantity of ducts or by cable manufacturer's installation recommendations. Underground ducts shall be not less than 100mm diameter thin-wall PVC.

Secondary electrical distribution system shall be 380/220 volt, 3-phase, 4 wire, 50 hertz.

The contractor shall provide service entrance feeders from the distribution system to the service entrance equipment located inside of each facility and sized to the rating of the service entrance equipment. Service entrance equipment shall include a distribution panelboard sized to supply the total load of each facility. Service entrance feeder lengths shall be kept as short as possible to minimize voltage drop. They shall be underground not less than 1220mm below grade in concrete encased 100mm minimum thin-wall PVC. A spare conduit of equal size shall be provided.

All panelboards shall be circuit breaker 'bolt-on' type panels. Minimum size circuit breaker shall be rated at no less than 20-amperes. Circuit breakers shall be connected to bus bar(s) within the panelboards. Daisy chain (breaker-to-breaker) connection(s) are not acceptable. Indoor distribution panels shall be flush mounted in finished areas and surface mounted in unfinished areas. All circuit breakers shall be labeled with an identification number corresponding to the panel schedule. A 3-pole circuit breaker shall be a single unit and not made up of 3 single pole circuit breakers connected with a wire or bridge to make a 3-pole breaker. All branch circuit wiring shall be copper, minimum #4 $mm^2$ (#12 AWG) installed in metal conduit. Wiring shall be concealed in finished areas and surface mounted in unfinished areas. Flush mounted panels shall be provided with spare empty conduits from panel to unfinished area for future use. All panels shall be provided with a minimum of 25% spare capacity for future load growth. Power receptacles (outlets) shall be duplex type 220 V, 50 hertz, type CEE 7/7 with Earth Ground rated for 20A or better and shall be compatible with the required secondary power. All splicing and terminations of wires shall be performed in junction or device boxes. Proper wire nuts/connectors shall be used for splicing wire. No twist-wire connections with electrical tape wrapped around it shall be acceptable. All electrical installation shall be in accordance with NFPA 70 (National Electric Code). For large panels (225 Ampere and above) provide an ammeter, voltmeter and kilowatt-hour meter to monitor energy usage. Selector switches shall be provided for each meter to read all 3 phases. Receptacle locations shall be coordinated with architectural requirements.

Contractor shall provide circuits for all mechanical equipment and any other equipment that requires power and make the final connections.

Voltage Drop for feeder circuits shall be limited to 2% and voltage drop for branch circuits shall be limited to no more than 3%; voltage drop for branch and feeder circuits combined shall be limited to no more than 5%.

All circuit breakers shall use down-stream coordination to ensure the breaker nearest a fault or overload is the first to trip.

9.4.1.1 Generator Power System

The generator power system shall be configured as illustrated in the drawings. The site's total load is defined as the site's total demand load + 25% spare capacity. The generators shall supply power at the utilization voltage of the facilities served.

Generators shall be derated as necessary for the ambient temperature and altitude of the site. An

automatic load bank matched to 40% of a single gnerators rated capacity (with load steps every 20% of the load bank's rating) to prevent the generator from "wet stacking" under low load conditions shall be provided.

Provide synchronizing/paralleling equipment where more than one generator is indicated to allow the generators to share the load of the site. When generator power is required at least one (1) generator shall be online at all times. When the site's load reaches 90% of the online generator's capacity, the standby generator(s) shall start. The generator that synchronizes first shall come online and share the load equally. When the site's load drops below 80% of the online generators' combined capacity, the generator(s) shall drop off line, one at a time, keeping a minimum of one generator operating online.

Whenever a generator starts, it shall go through a cool down cycle prior to shutdown. All relaying shall be automatically reset for automatic restart and stopping of generators as the load increases or decreases. Load sharing by the standby generator(s) shall be adjustable between 50% and 95% of the load on the online generator(s). Sequence of operation shall be time clock controlled at smaller sites (2 or 3 generators) and shall be PLC controlled at larger sites. A properly sized main switchboard shall be provided to distribute the power produced by the generator(s) to the facilities on the site.

Generator fuel storage capacity shall be based on usage at total load for a minimum of 30 days. Fuel storage shall either be in aboveground single wall steel tank(s) with containment pit or underground double wall with leak detection.

### 9.4.2 Lighting

Provide lighting as indicated in the contract drawings.

Indoor lighting for all areas shall consist of fluorescent surface mounted light fixtures. Exterior lighting shall be HID (metal halide) as referenced. Moisture resistant/waterproof fluorescent light fixtures shall be provided in high humidity and wet areas such as latrines, showers and outside. Battery powered 'emergency' and 'exit' lights shall be provided within each building, as applicable, for safe egress during a power outage. All light fixtures shall be factory finished, complete and operational, to include but not be limited to, lens, globe, lamp, ballast etc. Industrial type fluorescent light fixtures shall not be used. Every room shall be provided with a minimum of one light switch. Light fixtures shall be mounted approximately 2.5-meters (8 feet) above finished floor (AFF) minimum. Fixtures may be pendant or ceiling mounted, depending on the ceiling type and height.

### 9.4.3 Light Fixtures

Lighting fixtures shall be a standard manufacturer's product. Fluorescent surface mounted light fixtures shall be power factor corrected and equipped with standard electronic ballast(s. All light fixtures shall properly operate using standard lamps available locally. Fixtures shall be fully factory wired and designed for appropriate application i.e. appropriate for that location where installed.

### 9.4.4 Emergency "EXIT" Light Fixtures

Emergency "EXIT" light fixture shall be provided in accordance with NFPA requirements. Fixtures shall be single or double sided as required by the location and for wall/ceiling mounting. Unit shall illuminate continuously and be provided with self-contained nickel cadmium battery pack, to operate on floated-battery or trickle charge circuit. Fixture shall operate satisfactorily for 90 minutes during a power outage. Unit shall have test/re-set button and failure indication lamp. Primary operating voltage shall be 220 volts. Lettering "EXIT" shall be color red and not less than 6 inches (150 mm) in height and on matte white background. Illuminations shall be with LEDs.

### 9.4.6 Emergency Lighting

Battery powered emergency lights shall be provided as indicated in the drawings. Fixtures shall be provided with self-contained nickel cadmium battery pack to operate on stand-by circuit for 90-minute minimum. Unit shall have test/re-set button and failure indication lamp. Normal operating voltage shall be 220 volts. Emergency lighting fixtures shall be connected to the normal lighting system.

### 9.4.7 Light Switches
Light switch shall be single pole. Minimum of one light switch shall be provided in every room. Lighting in large rooms/areas may be controlled from multiple switches. Three-way or four-way lighting shall be provided in all rooms / areas with multiple entrances.

### 9.4.8 Receptacles
General-purpose receptacles shall be as required herein. All receptacles shall be duplex, unless otherwise specified in this section, the NEC, or other referenced standard.

Receptacles shall be located as indicated in the drawings. Receptacles in wet/damp areas or within 1 meter (~3 feet) of sinks, lavatories, or wash-down areas shall be ground fault circuit interrupter (GFCI) type or residual current disconnect (RCD) type, with the trip setting of 10 milliamperes or less. Total number of duplex receptacles shall be limited to six (6) per 20-ampere circuit breaker.

### 9.4.9 Conductors
All cable and wire conductors shall be copper. Conductor jacket or insulation shall be color coded to satisfy NEC requirements. The use of 75 or 90 degree C (minimum) terminals and insulated conductors is required. Use of higher degree C rated conductors on circuits with protective device terminals rated at a lower degree C is allowed but must be derated to the rating of the device terminals.

### 9.4.10 Grounding and Bonding
Grounding and bonding shall comply with the requirements of NFPA 70. Underground connections shall be exothermally welded. All exposed non-current carrying metallic parts of electrical equipment in the electrical system shall be grounded. Insulated grounding conductor (separate from the electrical system neutral conductor) shall be installed in all feeder and branch circuit raceways. Grounding conductor shall be green-colored, unless the local authority requires a different color-coded conductor. Ground rods shall be 20 millimeters (0.75 inches) in diameter and 3 meters (~10 feet) long made of copper-clad steel. Final measurement of the ground resistance shall be in compliance with the requirements of the local authority but shall not exceed 25 ohms when measured more than 48 hours after rainfall.

### 9.4.11 Enclosures
Enclosures for exterior and interior applications shall be NEMA Type 3S (IEC Classification IP54) and NEMA Type 1 (IEC Classification IP10) respectively.

### 9.4.12 Conduit Raceway System
Metal conduit system shall be complete, to include but not limited to, necessary junction and pull boxes. Smallest conduit size shall be no less than 20mm (0.75 inch) in diameter. All empty conduits shall be furnished with pull wire or cord or rope (depending on the size of conduit and length of run). System design and installation shall be per NFPA 70 requirements. Exterior conductors below grade shall be installed in concrete encased PVC conduit at a depth of 1220 millimeters.

### 9.4.13 Identification Nameplates
Major electrical equipment, such as transformers, panelboards, and load centers, etc. shall be provided with permanently installed engraved identification nameplates.

### 9.4.14 Schedules
All panelboards and load centers shall be provided with a directory. Directory shall be typed written in English.

### 9.4.15 Single Line Diagram
Complete single line diagrams shall be provided for all systems installed. All major items in each system shall be identified and labeled for respective ratings. Single line diagrams for each system, installed in a clear plastic frame, shall be provided.

## 9.5 OPERATIONS AND MAINTENANCE (O&M) FOR ELECTRICAL

(a) Contractor is required to provide a 12 month supply of parts for operation and maintenance of equipment according to the manufacturer's recommendations. In addition to this, the contractors shall provide an inventory of all items, location/address stored and secured, and commissioning plans.

(b) The O&M manuals must be provided prior to any training activities. Manuals shall be "tri-lingual" in Dari, Pashto and English.

(c) All control panels shall have tri-lingual name plates in Dari, Pashto and English.

(d) The contractor shall provide an outline of the training lesson plan (to be approved by the Government) prior to conducting training. CD recordings of training on video shall also be provided, after training is conducted.

-END OF SECTION-

# SECTION 01060

# SPECIAL CLAUSES

## PART 1 GENERAL

### 1.1 PRECONSTRUCTION CONFERENCE

#### 1.1.1 Schedule of Meeting

At the earliest practicable time, prior to commencement of the work, the Contractor and any Subcontractors whose presence is necessary or requested, shall meet in conference with representatives of the Contracting Officer to discuss and develop a mutual understanding relative to the details of the administration and execution of this contract. This will include but not necessarily be limited to the Contractor's Quality Control (CQC) Program, the Contractors Accident Prevention Program, submittals, correspondence, schedule, access to the work site, security requirements, interface requirements, temporary facilities and services, hazards and risks, working after normal hours or on weekends or holidays, assignment of inspectors, representations, special requirements, phasing, and other aspects of this project that warrant clarification and understanding.

#### 1.1.2 Meeting Minutes

It shall be the responsibility of the Contractors CQC System Manager to prepare detailed minutes of this meeting and submit those minutes to the Contracting Officer for approval within three (3) workdays. Any corrections deemed necessary by the Contracting Officer shall be incorporated and resubmitted within two (2) calendar days after receipt. Upon approval of the minutes by the Contracting Officer, the Contractor shall distribute the minutes to all parties present or concerned.

### 1.2 AREA USE PLAN

The Contractor shall submit to the Contracting Officer, within ten (10) calendar days after award of this contract, an Area Use Plan designating intended use of all areas within the project boundaries. This plan shall include, but not necessarily be limited to the following: the proposed location and dimensions of any area to be fenced and used by the Contractor; construction plant and building installations/the number of trailers and facilities to be used; avenues of ingress/egress to the fenced areas and details of the fence installation; drawings showing temporary electrical installations; temporary water and sewage disposal installations; material storage areas; hazardous storage areas. Any areas that may have to be graveled shall also be identified. The plan shall also include a narrative description of the building structural system, the site utility system and the office or administration facilities. The Contractor shall also indicate if the use of a supplemental or other staging area is desired. The Contractor shall not begin construction of the mobilization facilities prior to approval by the Contracting Officer of the Area Use Plan described herein.

### 1.3 CONTRACTOR'S MOBILIZATION AREA

The Contractor will be permitted to use an area approved by the Contracting Officer within the contract limits for operation of his construction equipment and plants, shops, warehouses, and offices. The Contractor is responsible for obtaining any required additional mobilization area above that designated. The construction site shall be cleared of construction debris and other materials and the area restored to its final grade.

**1.3.1 Contractor's Temporary Facilities**

**1.3.1.1 General**

All facilities within the Contractor's mobilization area shall be of substantial construction suitable for the local weather conditions. Sanitary facilities shall meet the requirements of Corps of Engineers, Safety and Health Requirements Manual EM 385-1-1. Local nationals will not be granted any privileges under this contract.

**1.3.1.2 Administrative Field Offices**

The Contractor may provide and maintain administrative field office facilities within the mobilization area at the designated site. Government office and warehouse facilities will not be available to the Contractor's personnel.

**1.3.1.3 Storage Area**

The Contractor shall construct a temporary 1.8 meter (6 foot) high chain link fence around trailers and materials. The fence shall include plastic strip inserts, colored green or brown, so that visibility through the fence is obstructed. Fence posts may be driven, in lieu of concrete bases, where soil conditions permit. Trailers, materials, or equipment shall not be placed or stored outside the fenced area unless approved in writing by the Contracting Officer.

**1.3.1.4 Plant Communication**

Whenever the Contractor has the individual elements of its plant so located that operation by normal voice between these elements is not satisfactory, the Contractor shall install a satisfactory means of communication, such as telephone or other suitable devices. If radio communication is approved by Contracting Officer / installation security office, frequency selection shall be approved by Contracting Officer to prevent interference with installation operations. Such devices shall be made available for use by Government personnel.

.

**1.3.1.5 Appearance of Mobilization Site Facilities and/or Trailers**

Mobilization Site Facilities and/or Trailers utilized by the Contractor for administrative or material storage purposes shall present a clean and neat exterior appearance and shall be in a state of good repair. Trailers or other transportable structures which, in the opinion of the Contracting Officer, require exterior painting or maintenance will not be allowed on the construction site until such work or maintenance has been performed to the satisfaction of the Contracting Officer.

**1.3.1.6 Maintenance of Storage Area**

Fencing shall be kept in a state of good repair and proper alignment. Should the Contractor elect to traverse unpaved areas which are not established roadways with construction equipment or other vehicles, such areas shall be covered with a layer of gravel as necessary to prevent rutting and the tracking of soil onto paved or established roadways; gravel gradation shall be at the Contractor's discretion.

**1.3.1.7 Security Provisions**

Adequate outside security lighting shall be provided at the Contractor's temporary facilities. The Contractor shall be responsible for the security of its own facilities and equipment.

**1.3.1.8 Sanitation**

a. Sanitary Facilities: The Contractor shall provide portable sanitation facilities for the Contractor’s use.

The Contractor shall be responsible for maintaining such facilities at no expense to the Government.
b. Trash Disposal: The Contractor shall be responsible for collection and disposal of trash from the work areas and from the mobilization area. General construction debris and demolition debris shall be collected and transported by the Contractor to a location designated by the Government. Construction debris, waste materials, packaging material and the like shall be removed from the work site daily. Loose debris capable of being windblown, shall be immediately placed in sealed or covered containers to prevent it from being blown onto taxiways or runways. Any dirt or soil that is tracked onto paved or surfaced roadways shall be cleaned daily. Materials resulting from demolition activities that are salvageable shall be stored within the fenced area described above. Stored material not indoors, whether new or salvaged, shall be neatly stacked when stored.

**1.3.1.9 Telephone**

The Contractor shall make arrangements to install and pay all costs for telephone facilities desired.

**1.3.1.10 Restoration of Storage Area**

Upon completion of the project and after removal of mobilization facilities, trailers, materials, and equipment from within the fenced area, the fence shall be removed and will become the property of the Contractor. Areas used by the Contractor for the storage of equipment or material, or other use, shall be restored to the original or better condition. Gravel used to traverse unpaved areas shall be removed and all such areas restored to their original conditions.

**1.3.2 Protection and Maintenance of Traffic**

During construction the Contractor shall provide access and temporary relocated roads as necessary to maintain traffic. The Contractor shall maintain and protect traffic on all affected roads during the construction period except as otherwise specifically directed by the Contracting Officer. Measures for the protection and diversion of traffic, including the provision of watchmen and flagmen, erection of barricades, placing of lights around and in front of equipment and the work, and the erection and maintenance of adequate warning, danger, and direction signs, shall be as required by the Host Nation and base authorities having jurisdiction. The traveling public shall be protected from damage to person and property. The Contractor's traffic on roads selected for hauling material to and from the site shall interfere as little as possible with base traffic. The Contractor shall investigate the adequacy of existing roads and the allowable load limit on these roads. The Contractor shall be responsible for the repair of any damage to roads caused by construction operations.

**1.3.2.1 Not used.**

**1.3.2.2 Not used.**

The Contractor’s employees may be allowed parking on the military installation. The Contractor is responsible for transporting workers (local nationals) from off post to the worksite, coordinating security identification screening, and cooperating in gate searches with the base authorities. The government reserves the right to terminate any and all contractor parking at any time.]

**1.3.3 Temporary Project Safety Fencing and Barricades**

The Contractor shall impose all measures necessary to limit public access to hazardous areas and to ensure the restriction of workers to the immediate area of the construction and mobilization site. The Contracting Officer may require in writing that the Contractor remove from the work any employee found to be in violation of this requirement.

**1.3.3.1 Barricades**

Barricades shall be required whenever safe public access to paved areas such as roads, parking areas

or sidewalks is prevented by construction activities or as otherwise necessary to ensure the safety of both pedestrian and vehicular traffic. Barricades shall be securely placed, clearly visible with adequate illumination to provide sufficient visual warning of the hazard during both day and night. Travel to and from the project site shall be restricted to a route approved by the Contracting Officer.

**1.3.4 Host Nation Authorizations, Permits and Licenses**

It shall be the Contractor's responsibility to obtain such local authorizations, permits and licenses necessary to establish his quarry operations, batching operations and haul routes (See Special Clause entitled: COMPLIANCE WITH HOST COUNTRY RULES AND CUSTOMS).

**1.4 RESPONSIBILITY FOR PHYSICAL SECURITY**

Prior to mobilization, the Contractor shall submit his proposed means of providing project security to prevent unauthorized access to equipment, facilities, materials and documents, and to safeguard them against sabotage, damage, and theft. The Contractor shall be responsible for physical security of all materials, supplies, and equipment of every description, including property which may be Government-furnished or owned, for all areas occupied jointly by the Contractor and the Government, as well as for all work performed.

**1.5 DUST CONTROL**

The Contractor shall be required to control objectionable dust in the work areas, access roadways, and haul roads by means of controlled vehicle speeds or dust palliatives. Vehicles transporting sand, cement, gravel or other materials creating a dust problem shall be covered, as directed by the Contracting Officer, or in accordance with local Laws, codes, and regulations.

**1.6 NOT USED**

**1.7 NOT USED**

**1.8 WATER**

The Contractor shall install and maintain necessary supply connections and piping for same, but only at such locations and in such manner as may be approved by the Contracting Officer. Before final acceptance of systems, or facilities, all temporary connections and piping installed by the Contractor shall be removed at his expense in a manner satisfactory to the Contracting Officer.

**1.9 NOT USED**

**1.10 ELECTRICITY (CONTRACTOR PROVIDED)**

Electrical service is not available for use under this contract; therefore all electric current required by the Contractor shall be the responsibility of the Contractor, furnished at his own expense. The Contractor shall provide diesel generators to meet his demand requirements. Electricity required for final testing systems will be furnished by the Government. The means of doing so, such as by temporary distribution systems, shall be the responsibility of the Contractor. All temporary connections for electricity shall be subject to the approval of the Contracting Officer and shall comply with Corps of Engineers manual EM 385-1-1 entitled Safety and Health Requirements Manual. All temporary lines shall be furnished, installed, connected and maintained by the Contractor in a workmanlike manner satisfactory to the Contracting Officer. Before final acceptance of systems, or facilities, all temporary connections installed by the Contractor shall be removed at his expense in a manner satisfactory to the Contracting Officer.

**1.11 WORK OUTSIDE REGULAR HOURS**

If the Contractor desires to carry on work outside regular duty hours, or on holidays, including the following U.S. holidays: New Year's Day, Martin Luther King Jr Birthday, President's Day, Memorial Day, Independence Day, Labor Day, Columbus Day, Veteran's Day, Thanksgiving and Christmas. the Contractor shall submit an application to the Contracting Officer. Due to reliance upon local national laborers and time off due to local observances, there may be disruptions. Potentials dates are the following local observances: National Islamic Holiday of Ashura, Ramadan (actual date varies – check with local authorities). The Contractor shall allow ample time to enable satisfactory arrangements to be made by the Government for inspecting the work in progress. At night, exterior lighting shall be provided in conformance with EM-385-1-1 entitled "Safety and Health Requirements Manual".

**1.12 NOT USED**

As soon as practicable, but in any event not later than thirty (30) calendar days after award of this contract, the Contractor shall meet in conference with the Contracting Officer, or his duly authorized representatives, to discuss and develop mutual understanding relative to the scheduling of work in and access to the existing facilities where work has to be performed under this contract, so that the Contractor's proposed construction schedule is coordinated with the operating and security requirements of the installation.

**1.13 Not used.**

**1.14 Not used**

**1.15 CERTIFICATES OF COMPLIANCE**

Any certificates required for demonstrating proof of compliance of materials with specification requirements shall be executed in accordance with Section 01335 SUBMITTAL PROCEDURES FOR DESIGN/BUILD. Each certificate shall be signed by an official authorized to certify in behalf of the manufacturing company involved and shall contain the name and address of the Contractor, the project name and location, description and the quantity of the items involved, and date or dates of shipment or delivery to which the certificates apply. Copies of laboratory test reports submitted with certificates shall contain the name and address of the testing laboratory and the date or dates of the tests to which the report applies. Certification shall not be construed as relieving the Contractor from furnishing satisfactory material.

**1.16 NOT USED**

**1.17 NOT USED**

Should the Contractor encounter asbestos or other hazardous materials, during the construction period of this contract, he shall immediately stop all work activities in the area where the hazardous material is discovered. The Contractor shall then notify the Contracting Officer; identify the area of danger; and not proceed with work in that area until given approval from the Contracting Officer to continue work activities. Hazardous material is considered to be asbestos, explosive devices, toxic waste, or material hazardous to health and safety. The Contractor shall secure the area from daily traffic until it is safe to resume normal activities.

**1.18 NOT USED**

**1.19 NOT USED**

**1.20 NOT USED**

**1.21 NOT USED**

**1.22 TIME EXTENSIONS**

1.22.1 General

This provision specifies the procedure for determination of time extensions for unusually severe weather in accordance with the Contract Clause 52.249-10 entitled DEFAULT (FIXED-PRICE CONSTRUCTION) APR 1984. The listing below defines the anticipated monthly unusually severe weather for the contract period and is based on National Oceanic and Atmospheric Administration (NOAA) or similar data for the geographic location of the project. The schedule of anticipated unusually severe weather will constitute the baseline for determining monthly weather time evaluations. Upon award of this contract and continuing throughout the contract each month, actual unusually severe weather days will be recorded on a calendar day basis (including weekends and holidays) and compared to the monthly anticipated unusually severe weather in the schedule below. The term "actual unusually severe weather days" shall include days actually impacted by unusually severe weather. The Contractor's schedule must reflect the anticipated unusually severe weather days on all weather dependent activities.

MONTHLY ANTICIPATED UNUSUALLY SEVERE WEATHER CALENDAR DAYS

| | |
|---|---|
| January | 14 Days |
| February | 7 Days |
| March | 4 Days |
| April thru December | 28 Days |

1.22.2 Time Extensions

The number of actual unusually severe weather days shall be calculated chronologically from the first to the last day in each month. Unusually severe weather days must prevent work for fifty percent (50%) or more of the Contractor's workday and delay work critical to the timely completion of the project. If the number of actual unusually severe weather days exceeds the number of days anticipated in the paragraph above, the Contracting Officer will determine whether the Contractor is entitled to a time extension. The Contracting Officer will convert any qualifying delays to calendar days and issue a modification in accordance with the Contract Clause 52.249-10 entitled DEFAULT (FIXED-PRICE CONSTRUCTION) APR 1984.

1.22.3 Other Delays

Construction delays due to full or partial base closures due to incidents such as demonstrations, civil unrest and outright attacks will be examined on an individual basis for consideration of time extensions.

**1.23 STANDARDIZATION**

Where two or more items of the same type or class of product, system or equipment furnished in this project are required, the units shall be products of the same manufacturer and shall be interchangeable when of the same size, capacity, performance characteristics, and rating. The only exception to this requirement is where the items are interchangeable due to conformance with industry standards (valves, fittings, etc.); they need not be by the same manufacturer. This requirement applies to all manufactured items in the project that normally require repair or replacement during the life of the equipment.

**1.24 COMPLIANCE WITH HOST COUNTRY RULES AND CUSTOMS**

The laws of Host Country may prohibit access to certain areas of the country that are under military control. The Contractor shall furnish the Contracting Officer the names of personnel, type, and amounts of equipment, dates and length of time required at the site, and the purpose of entering the host country. It is understood that areas to which rights of entry are provided by the Host Government are to be used only for work carried out under the contract and no destruction or damages shall be caused, except through normal usage, without concurrence of the Host Government.

**1.24.1 Contractor's Responsibilities**

The following items are the sole responsibility of the Contractor to investigate, estimate as to cost, and assume the risk, as normally encountered by Contractors. The Contractor shall be responsible for determining the effect of the following on his own cost of performance of the contract and for including sufficient amount in the contract price:

a. Official language and type of accounts required to satisfy the officials of the Local Government.

b. Entry and exit visas, residence permits, and residence laws applicable to aliens. This includes any special requirements of the Host Government, including those required by local Labor Offices, which the Contractor may have to fulfill before an application for a regular block of visas will be accepted.

c. Passports, health and immunization certificates, and quarantine clearance.

d. Compliance with local labor and insurance laws, including payment of employer's share of contribution, collecting balance from employee and paying into insurance funds.

e. Strikes, demonstrations and work stoppage.

f. Collection through withholding and payment to local Government, of any Host Country income tax on employees subject to tax.

g. Arranging to perform work in the Host Country, to import personnel, to employ non-indigenous labor, to receive payments and to remove such funds from the country.

h. Operating under local laws, practices, customs and controls, and with local unions, in connection with hiring and firing, mandatory wage scales, vacation pay, severance pay, overtime, holiday pay, 7th day of rest, legal notice or pay in lieu thereof for dismissal of employees, slowdown and curtailed schedules during religious holidays and ratio of local labor employed in comparison to others.

i. Possibility of claims in local bureaus, litigation in local courts, or attachment of local bank accounts.

j. Compliance with workmen's compensation laws and contributions into funds. Provisions of necessary medical service for Contractor employees.

k. Special license required by the local Government for setting up and operating any manufacturing plant in the Host Country, e.g. concrete batching, precast concrete, concrete blocks, etc.

l. Sales within the host country of Contractor-owned materials, and equipment.

m. Special licenses for physicians, mechanics, tradesmen, drivers, etc.

n. Identification and/or registration with local police of imported personnel.

o. Stamp tax on documents, payments and payrolls.

p. Base passes for permanent staff, day laborers, motor vehicles, etc.

q. Compliance with all customs and import rules, regulations and restrictions, including, but not limited to, local purchase requirements.

**1.25 Not used.**

**1.26 RADIO TRANSMITTER RESTRICTIONS**

To preclude accidental actuation of sensitive electronic equipment, the Contractor shall not use radio-transmitting equipment without prior approval of the Contracting Officer.

**1.27 Not used.**
**1.28 PUBLIC RELEASE OF INFORMATION**

**1.28.1 Prohibition**

There shall be no public release of information or photographs concerning any aspect of the materials or services relating to this bid, contract, purchase order, or other documents resulting there from without the prior written approval of the Contracting Officer.

**1.28.2 Subcontract and Purchase Orders**

The Contractor agrees to insert the substance of this clause in all purchase orders and subcontract agreements issued under this contract.

**1.29 NOT USED**

## PART 2 LOCAL CLAUSES

### 2.1 APPLICATION OF US CRIMINAL JURISDICTION

Reference DODI 5525.11. The contractor is directed to provide all of its personnel working under this contract, and to require all of its subcontractors to provide their personnel, with written notification that - with the exception of nationals of Afghanistan and those ordinarily resident in Afghanistan - contractor and subcontractor personnel, and the dependents of contractor and subcontractor personnel who are residing with such personnel, may be subject to US criminal jurisdiction as provided for in the Military Extraterritorial Jurisdiction Act, 18 USC 3261-3267; see Section 3267(1)(A)(iii)(I) and (2)(A)(iii). A copy of the notice ***shall be furnished to the contracting officer upon award of the contract***, along with a certification by an authorized company representative attesting to the provision of the notification to contractor personnel.

### 2.2 ATTACKS FROM HOSTILE ENTITIES

This contract is firm fixed-price. Costs incurred in the performance of project execution that arise from the attacks of hostile entities, such as costs arising from damage to or destruction of contractor equipment and facilities, and damage to or destruction of the project prior to Government acceptance, are the sole responsibility of the contractor. The Government makes no guarantee to provide the contractor with security, and bears no obligation to reimburse the contractor for costs arising from the attacks of hostile entities. When appropriate, the Contracting Officer may provide the contractor with an equitable adjustment with respect to time – but not cost – in accordance with clause 52.249-10; see 52.249-10(b)(1)(i) and (2).

### 2.3 INSTALLATION ACCESS AND BADGING

This contract is firm fixed-price. It is the responsibility of the contractor to be knowledgeable of and to abide by any and all applicable installation access procedures and requirements, to include any and all badging procedures and requirements, that may be necessary for contractor access to the project site. Such procedures and requirements may change over the course of contract performance; it is the responsibility of the contractor to plan accordingly in order to meet its existing obligations under this contract. The US Army Corps of Engineers, Afghanistan Engineer District, neither controls nor is responsible for any such installation access procedures, requirements or changes thereto.

**2.4 CUSTOMS CLEARANCE**

Reference clauses 52.229-6 and 52.225-13. This contract is firm fixed-price. It is the responsibility of the contractor to be knowledgeable of and to abide by any and all applicable customs clearance procedures and requirements that may be necessary for the transportation of supplies and equipment into Afghanistan. Such procedures and requirements may change over the course of contract performance; it is the responsibility of the contractor to plan accordingly in order to meet its existing obligations under this contract. The US Army Corps of Engineers, Afghanistan Engineer District, neither controls nor is responsible for any such customs clearance procedures, requirements or changes thereto.

**2.5 TRAVEL WARNINGS**

The contractor shall provide all personnel working under this contract, and shall require subcontractors to provide their personnel, with a written notification advising such personnel to be aware of US State Department Travel Warnings with respect to Afghanistan, available at http://travel.state.gov, in the event they wish to consider bringing their dependants into Afghanistan. A copy of the notice ***shall be furnished to the contracting officer upon award of the contract***, along with a certification by an authorized company representative attesting to the provision of the notification to contractor personnel. At no time, subject to the written approval of the contracting officer, may the contractor allow such dependants, or any other unauthorized individuals, to be present on the project site grounds, whether in transit or otherwise.

**2.6 DRUG-FREE WORKFORCE**

Documentation of the contractor's drug-free workforce program as required by clause 252.223-7004(b) ***shall be furnished to the contracting officer upon award of the contract***.

**2.7 COMBATING TRAFFICKING IN PERSONS, COMMERCIAL SEX ACTS, FORCED LABOR**

A copy of the employee notification statement as required by clause 252.222-7006(d) ***shall be furnished to the contracting officer upon award of the contract***, along with a certification by an authorized company representative attesting to the provision of the notification to contractor personnel.

-- End of Section --

# SECTION 01312

# QUALITY CONTROL SYSTEM (QCS)

## PART 1: GENERAL

### 1.1 GENERAL

The Government will use the Resident Management System for Windows (RMS) to assist in its monitoring and administration of this contract. The Contractor shall use the Government-furnished Construction Contractor Module of RMS, referred to as QCS, to record, maintain, and submit various information throughout the contract period. The Contractor module, user manuals, updates, and training information can be downloaded from the RMS web site: the Contractor can obtain the current address from the Government. This joint Government-Contractor use of RMS and QCS will facilitate electronic exchange of information and overall management of the contract. QCS provides the means for the Contractor to input, track, and electronically share information with the Government in the following areas:

Administration
Finances
Quality Control
Submittal Monitoring
Scheduling
Import/Export of Data

#### 1.1.1 Correspondence and Electronic Communications

For ease and speed of communications, both Government and Contractor will, to the maximum extent feasible, exchange correspondence and other documents in electronic format. Correspondence, pay requests and other documents comprising the official contract record shall also be provided in paper format, with signatures and dates where necessary. Paper documents will govern, in the event of discrepancy with the electronic version.

#### 1.1.2 Other Factors

Particular attention is directed to specifications “SUBMITTAL PROCEDURES”, “CONTRACTOR QUALITY CONTROL”, "PROJECT SCHEDULE", and Contract Clause, "Payments", which have a direct relationship to the reporting to be accomplished through QCS. Also, there is no separate payment for establishing and maintaining the QCS database; all costs associated therewith shall be included in the contract pricing for the work.

### 1.2 QCS SOFTWARE

QCS is a Windows-based program that can be run on a stand-alone personal computer or on a network. Prior to the Pre-Construction Conference, the Contractor shall be responsible to download, install and use the latest version of the QCS software from the Government's RMS Internet Website. Any program updates of QCS will be made available to the Contractor via the Government RMS Website as they become available. It shall be the responsibility of the contractor to maintain the QCS software and install updates as they become available.

### 1.3 SYSTEM REQUIREMENTS

The following listed hardware and software is the minimum system configuration that the Contractor shall have to run QCS. No separate payment shall be made for updating or maintaining the necessary hardware configurations necessary to run QCS:

Hardware

IBM-compatible PC with 1000 MHz Pentium or higher processor
256+ MB RAM for workstation / 512+ MB RAM for server
1 GB hard drive disk space for sole use by the QCS system
Digital Video Disk (DVD)-Compact Disk (CD) Reader-Writer (RW/ROM)
Monitor with a resolution of AT LEAST 1024x768, 16bit colors
Mouse or other pointing device
Windows compatible printer. (Laser printer must have 4 MB+ of RAM)
Connection to the Internet, minimum 56k BPS

Software

MS Windows 2000 or higher
QAS-Word Processing software: MS Word 2000 or newer
Internet browser supporting HTML 4.0 or higher
Electronic mail (E-mail) MAPI compatible
Virus protection software regularly upgraded with all issued manufacturer's updates

1.4 RELATED INFORMATION

1.4.1 QCS User Guide

After contract award, the Contractor shall download instructions for the installation and use of QCS from the Government RMS Internet Website; the Contractor can obtain the current address from the Government. In case of justifiable difficulties, the Government will provide the Contractor with a CD-ROM containing these instructions.

1.4.2 Contractor Quality Control (CQC) Training

The use of QCS will be discussed with the Contractor's QC System Manager during the mandatory CQC Training class. The government will provide QCS training if requested by the contractor.

1.5 CONTRACT DATABASE

Prior to the pre-construction conference, the Government shall provide the Contractor with basic contract award data to use for QCS. The Government will provide data updates to the Contractor as needed, generally by files attached to E-mail or via CD-ROM. These updates will generally consist of submittal reviews, correspondence status, QA comments, and other administrative and QA data.

1.6 DATABASE MAINTENANCE

The Contractor shall establish, maintain, and update data for the contract in the QCS database throughout the duration of the contract. Data updates to the Government shall be submitted via either E-mail or electronic media with printed/file attachments, e.g., daily reports, schedule updates, payment requests. If permitted by the Contracting Officer. The QCS database typically shall include current data on the following items:

1.6.1 Administration

1.6.1.1 Contractor Information

The database shall contain the Contractor's name, address, telephone numbers, management staff, and other required items. Within 14 calendar days of receipt of QCS software from the Government, the Contractor shall deliver Contractor administrative data in electronic format via E-mail.

1.6.1.2 Subcontractor Information

The database shall contain the name, trade, address, phone numbers, and other required information for all subcontractors. A subcontractor must be listed separately for each trade to be performed. Each subcontractor/trade shall be assigned a unique Responsibility Code, provided in QCS. Within 14 calendar days of receipt of QCS software from the Government, the Contractor shall deliver subcontractor administrative data in electronic format via E-mail.

1.6.1.3 Correspondence

All Contractor correspondence to the Government shall be identified with a serial number. Correspondence initiated by the Contractor's site office shall be prefixed with "S". Letters initiated by the Contractor's home (main) office shall be prefixed with "H". Letters shall be numbered starting from 0001. (e.g., H-0001 or S-0001). The Government's letters to the Contractor will be prefixed with "C".

1.6.1.4 Equipment

The Contractor's QCS database shall contain a current list of equipment planned for use or being used on the jobsite, including the most recent and planned equipment inspection dates.

1.6.1.5 Management Reporting

QCS includes a number of reports that Contractor management can use to track the status of the project. The value of these reports is reflective of the quality of the data input, and is maintained in the various sections of QCS. Among these reports are: Progress Payment Request worksheet, QA/QC comments, Submittal Register Status, Three-Phase Inspection checklists.

1.6.2 Finances

1.6.2.1 Pay Activity Data

The QCS database shall include a list of pay activities that the Contractor shall develop in conjunction with the construction schedule. The sum of all pay activities shall be equal to the total contract amount, including modifications. Pay activities shall be grouped by Contract Line Item Number (CLIN), and the sum of the activities shall equal the amount of each CLIN. The total of all CLINs equals the Contract Amount.

1.6.2.2 Payment Requests

All progress payment requests shall be prepared using QCS. The Contractor shall complete the payment request worksheet and include it with the payment request. The work completed under the contract, measured as percent or as specific quantities, shall be updated at least monthly. After the update, the Contractor shall generate a payment request report using QCS. A signed paper copy of the approved payment request is also required, which shall govern in the event of discrepancy with the electronic version.

1.6.3 Quality Control (QC)

QCS provides a means to track implementation of the 3-phase QC Control System, prepare daily reports, identify and track deficiencies, document progress of work, and support other contractor QC requirements. The Contractor shall maintain this data on a daily basis. Entered data will

automatically output to the QCS generated daily report.

1.6.3.1 Daily Contractor Quality Control (CQC) Reports.

QCS includes the means to produce the Daily CQC Report. The Daily CQC Report generated by QCS shall be the Contractor's official report. Data from any supplemental reports by the Contractor shall be summarized and consolidated onto the QCS-generated Daily CQC Report. Daily CQC Reports shall be submitted as required by specification 01451 “CONTRACTOR QUALITY CONTROL”.

1.6.3.2 Deficiency Tracking.

The Contractor shall use QCS to track deficiencies. Deficiencies identified by the Contractor will be numerically tracked using QC punch list items. The Contractor shall maintain a current log of its QC punch list items in the QCS database. The Government will log the deficiencies it has identified using its QA punch list items. The Government's QA punch list items will be included in its export file to the Contractor. The Contractor shall regularly update the correction status of both QC and QA punch list items.

1.6.3.3 Three-Phase Control Meetings

The Contractor shall maintain scheduled and actual dates and times of preparatory and initial control meetings in QCS.

1.6.3.4 Accident/Safety Tracking.

The Government will issue safety comments, directions, or guidance whenever safety deficiencies are observed. The Government's safety comments will be included in its export file to the Contractor. The Contractor shall regularly update the correction status of the safety comments. In addition, the Contractor shall utilize QCS to advise the Government of any accidents occurring on the jobsite. This brief supplemental entry is not to be considered as a substitute for completion of mandatory reports.

1.6.3.5 Features of Work

The Contractor shall include a complete list of the features of work in the QCS database. A feature of work may be associated with multiple pay activities. However, each pay activity (see subparagraph "Pay Activity Data" of paragraph "Finances") will only be linked to a single feature of work.

1.6.3.6 QC Requirements

The Contractor shall develop and maintain a complete list of QC testing, transferred and installed property, and user training requirements in QCS. The Contractor shall update all data on these QC requirements as work progresses, and shall promptly provide this information to the Government via QCS.

1.6.4 Submittal Management

The Contractor shall maintain a complete list of all submittals, including completion of all data columns. Dates on which submittals are received and returned by the Government will be included in its export file to the Contractor. The Contractor shall use QCS to track and transmit all submittals. ENG Form 4025, submittal transmittal form, and the submittal register update, ENG Form 4288, shall be produced using QCS. RMS will be used to update, store and exchange submittal registers and transmittals, but will not be used for storage of actual submittals.

1.6.5 Schedule

The Contractor shall develop a construction schedule consisting of pay activities, in accordance with Specification Section Project Schedule. This schedule shall be input and maintained in the QCS database either manually or by using the Standard Data Exchange Format (SDEF). The updated schedule data shall be included with each pay request submitted by the Contractor.

1.6.6 Requests for Information (RFI)

The Contractor shall use the two-way RFI system contained in QCS for tracking all RFI's generated during the contract. Hard copies of all RFI's shall be provided to the government, and will govern in the event of a discrepancy between electronic and printed mediums.

1.6.7 Import/Export of Data

QCS includes the ability to export Contractor data to the Government and to import submittal register and other Government-provided data, and schedule data using SDEF.

1.7 IMPLEMENTATION

Contractor use of QCS as described in the preceding paragraphs is mandatory. The Contractor shall ensure that sufficient resources are available to maintain its QCS database, and to provide the Government with regular database updates. QCS shall be an integral part of the Contractor's management of quality control.

1.8 DATA SUBMISSION VIA COMPUTER DISKETTE OR CD-ROM

The Government-preferred method for Contractor's submission of updates, payment requests, correspondence and other data is by E-mail with file attachment(s). For locations where this is not feasible, the Contracting Officer may permit use of computer diskettes or CD-ROM for data transfer. Data on the disks or CDs shall be exported using the QCS built-in export function.

1.9 MONTHLY COORDINATION MEETING

The Contractor shall update the QCS database each workday. At least monthly, the Contractor shall generate and submit an export file to the Government with schedule update and progress payment request. As required in Contract Clause "Payments", at least one week prior to submittal, the Contractor shall meet with the Government representative to review the planned progress payment data submission for errors and omissions. The Contractor shall make all required corrections prior to Government acceptance of the export file and progress payment request. Payment requests accompanied by incomplete or incorrect data submittals will be returned. The Government will not process progress payments until an acceptable QCS export file is received.

1.10 NOTIFICATION OF NONCOMPLIANCE

The Contracting Officer will notify the Contractor of any detected noncompliance with the requirements of this specification. The Contractor shall take immediate corrective action after receipt of such notice. Such notice, when delivered to the Contractor at the work site, shall be deemed sufficient for the purpose of notification.

-- End of Section --

SECTION 01321

# SECTION 01321

# PROJECT SCHEDULE

## PART 1 GENERAL

### 1.1 SUBMITTALS

The following shall be submitted for Government approval in accordance with Section 01335 SUBMITTAL PROCEDURES: SD-07 Schedules Project Schedule; Horizontal Bar Chart and Periodic Payment Request Updates; and Projected Earnings Curve and Periodic Payment Request Updates. Revisions to the Project Schedule and Projected Earnings Curve for Modifications Issued to this Contract shall be coordinated with the Contracting Officer.

## PART 2 PRODUCTS (Not Applicable)

## PART 3 EXECUTION

### 3.1 GENERAL

The Contractor shall furnish a Project Schedule as described below. The scheduling of construction shall be the responsibility of the Contractor. Contractor management personnel shall actively participate in its development. Subcontractors and suppliers working on the project should also contribute in developing and maintaining an accurate Project Schedule. The approved Project Schedule shall be used to measure the progress of the work, to aid in evaluating time extensions, and to provide the basis of all progress payments.

### 3.2 BASIS FOR PAYMENT

The schedule shall be the basis for measuring Contractor progress. Lack of an approved schedule or scheduling personnel shall result in an inability of the Contracting Officer to evaluate Contractor progress for the purposes of payment. Failure of the Contractor to provide all information, as specified below, shall result in the disapproval of the entire Project Schedule submission and the inability of the Contracting Officer to evaluate Contractor progress for payment purposes. In the case where Project Schedule revisions have been directed by the Contracting Officer and those revisions have not been included in the Project Schedule, then the Contracting Officer may hold retainage up to the maximum allowed by contract, each payment period, until revisions to the Project Schedule have been made.

### 3.3 PROJECT SCHEDULE

#### 3.3.1 Schedule of Construction

Within seven (7) calendar days after notice to proceed, the Contractor shall prepare and submit a Construction Schedule to the Contracting Officer for approval. This schedule shall address each payment line item and/or sub-line item listed in the Proposal Schedule separately.

#### 3.3.2 Non-Compliance

Failure of the Contractor to comply with the requirements of the Contracting Officer shall be grounds for determination by the Contracting Officer that the Contractor is not prosecuting the work with sufficient diligence to ensure completion within the time specified in the contract. Upon making this determination, the Contracting Officer may terminate the Contractor's right to proceed with the work, or any separable part of it, in accordance with the default terms of this contract.

**3.3.3 Horizontal Bar Chart**

The required schedule shall utilize an automated scheduling program and shall be in the form of a horizontal bar chart. The line or sub-line item schedule of activities shall be listed down the left side of the page. A time scale shall run across the bottom of the page. Each work item shall be represented by a bar starting with the schedule start date and running continuously to the completion date.

**3.3.4 Cost**

Listed with each work item shall be a corresponding cost representing the total cost, such as material, labor, equipment, and overhead associated with that item. The total cost of the work items shall be equal to the Bid Price for that sub-line item of the Proposal Schedule.

**3.3.5 Scheduled Project Completion**

The schedule interval shall extend from Notice-To-Proceed to the contract completion date.

**3.3.6 Projected Earning Curve**

Submitted with the Construction Schedule shall be a Projected Earning Curve. The Projected Earning Curve is a plot of the Contractor's earnings on the vertical axis and the contract duration on the horizontal axis. The earnings figure shall relate to the complete value of the contract and need not reflect each facility separately.

**3.3.7 Construction Schedule**

The Construction Schedule shall be on one page with a maximum dimension of 90 cm by 120 cm. The Contractor shall submit the Projected Earnings Curve on the same page. The initial submittal shall include one (1) reproducible and four (4) copies, one (1) copy of which will be returned to the Contractor when approved.

**3.3.8 Submission With Partial Payment Estimate**

Each time the Contractor submits a payment request under this contract he shall also submit three (3) copies of the Bar Chart. The Bar Chart shall be annotated by indicating the percent complete for each activity directly on the bar. The Projected Earnings Curve shall be annotated by plotting actual earnings versus time on the same graph. Those work items reflecting performance which is behind schedule by fifteen (15) calendar days or more shall be fully explained in detail giving the reason for delay and the Contractor's plan for timely completion within the schedule.

**3.3.9 Modifications**

The Construction Schedule and Projected Earning Curve shall be revised to reflect any and all modifications issued to this contract as they are issued. Format and numbers of copies as defined in paragraph CONSTRUCTION SCHEDULE shall be submitted for approval by the Contracting Officer.

**3.4 PERIODIC PROGRESS MEETINGS**

Progress meetings to discuss payment shall include a monthly on-site meeting or shall be conducted at other regular intervals mutually agreed to at the preconstruction conference. During this meeting the Contractor shall describe, on an activity-by-activity basis, all proposed revisions and adjustments to the project schedule required to reflect the current status of the project. The Contracting Officer will approve activity progress, proposed revisions, and adjustments as appropriate.

**3.4.1 Update Submission Following Progress Meeting**

A complete update of the project schedule containing all approved progress, revisions, and adjustments, based on the regular progress meeting, shall be submitted not later than four (4) working days after the monthly progress meeting.

**3.4.2 Progress Meeting Contents**

Update information, including Actual Start Dates, Actual Finish Dates, Remaining Durations, and Cost to Date, shall be subject to the approval of the Contracting Officer.

**3.4.3 Earnings Report**

A compilation of the Contractor's Total Earnings on the project from the Notice-to-Proceed until the most recent Monthly Progress Meeting shall be recorded. This report shall reflect the Earnings of specific activities based on the agreements made in the field and approved between the Contractor and the Contracting Officer at the most recent Monthly Progress Meeting. Provided that the Contractor has provided a complete schedule update, this report shall serve as the basis of determining Contractor Payment. This report shall: sum all activities and provide a percent complete by individual activity and total project percent complete. The report shall contain, for each activity: activity identification, activity description, original budgeted amount, total quantity, quantity to date, percent complete (based on cost), and earnings to date.

**3.4.4 Cost Completion**

The earnings for each activity started shall be reviewed. Payment shall be based on earnings for each in-progress or completed activity. Payment for individual activities shall not be made for work that contains quality defects. A portion of the overall project amount may be retained based on delays of activities.

**3.4.5 Network Analysis System**

The Contractor may, as an option, submit to the Contracting Officer for approval, a time related network analysis in lieu of the previously specified bar chart.

**-- End of Section --**

# SECTION 01335

# SUBMITTAL PROCEDURES FOR DESIGN-BUILD SITE ADAPT PROJECTS

## PART 1 GENERAL

### 1.1 REFERENCE

The publication listed below forms a part of this specification to the extent referenced. The publication is referenced to in the text by basic designation only.

CONSTRUCTION SPECIFICATIONS INSTITUTE

Manual of Practice
Construction Specifications Institute
http://www.csinet.org/s_csi/index.asp
601 Madison Street
Alexandria, Virginia
22314-1791

NATIONAL INSTITUTE OF BUILDING SCIENCES (NIBS)

Unified Master Reference List (UMRL)
National Institute of Building Sciences
1090 Vermont Avenue, NW, Suite 700
Washington, DC 20005-4905
Email: nibs@nibs.org
FAX: (202) 289-1092
Tele: (202) 289-7800

AFGHANISTAN ENGINEER DISTRICT

AFGHANISTAN ENGINEER DISTRICT
http://www.aed.usace.army.mil
U.S. Army Corps of Engineers
Attention: Qalaa House
APO AE 09356

### 1.2 SUBMITTAL CLASSIFICATION

Submittals are classified as follows.

### 1.2.1 DESIGN SUBMITTALS

Contractor furnished design submittals are the various design documents which primarily consist of field investigations, calculations, design analysis, drawings and specifications.

In addition, for each design submittal, the contractor shall submit all non-administrative modifications issued for the contract as part of the Design Submittal package to enable AED to validate that these modifications have been incorporated into this design submittal.

**Design submittals should only address Contract requirements not shown on plans and specifications already furnished to the Contractor as part of this contract. Plans and specifications furnished to the Contractor shall NOT be included as part of any Design Submittal. The Contractor shall complete all work as shown in these furnished drawings and specifications without deviation, unless site conditions mandate changes (larger building foundations per geotechnical investigations, etc.).**

The Contractor shall clearly label and date all design submittals to reflect the current design stage and date of submission to the Government to avoid confusion between current and previous submittals. The Contractor shall not begin construction work until the Government has reviewed and approved the work presented in each Design Submittal, including complete resolution of all DrChecks comments, and the Contracting Officer has cleared work for construction. Clearance for construction shall not be construed as meaning Government approval. Unless otherwise indicated, the risk for the design is the sole responsibility of the Contractor.

As a minimum, design submittals shall be submitted at the following intervals:

a. Site-Adapt General Design review - 65%

b. Final Site-Adapt Design review - 90%

c. Cleared For Construction review - 100%

#### 1.2.1.1 SITE-ADAPT GENERAL DESIGN (65%)

This Design Submittal presents all information necessary to “Site Adapt” the fully designed and detailed buildings and other project features. It is crucial that the submittal is complete and includes all components noted below and any other pertinent information not listed which the Contractor requires to enable construction to begin as soon as possible. As a minimum, for each Contract project location the submittal shall contain:

a. Results of the site topographic survey (in accordance with Paragraph 3.9.6.3 through 3.9.6.5 of this Section) which shall include highlighting of significant features (wadis, adjacent properties and structures, roads, etc.) to provide a detailed, overall understanding of the project site and surrounding area; demolition plan for existing site features; complete grading and drainage plan with existing grades, proposed grades, and building finished floor elevations based on Contract technical requirements;

b. Any necessary adaptations of the Concept Plan and detailed design drawings furnished with this Contract that might be required due to actual site constraints, to include: water supply/storage location and distribution layout plan; wastewater collection or treatment location and tie-in to all required buildings; electrical generation and distribution plan; connection of existing roads with ECP location(s); and any other changes required due to adjacent property or existing topography. As noted in Paragraph 1.2.1, this would also include proposed changes to the detailed drawings if, and only if, site conditions mandate revisions.

c. Geotechnical Report, indicating appropriate information for various site characteristics, soil parameters as determined by certified lab tests, allowable soil bearing capacities and confirmation that the assumed bearing capacity for the fully designed structures (typically stated as 0.75 $kg/cm^2$) can be achieved; estimated settlement for building foundation loads; and all changes to the given building foundation designs due to the Geotechnical Report conclusions.

d. Septic Tank drawings and details (if required by Section 01010 of the SOW), showing tank depth and sizing based on expected sanitary load, and all connecting piping, with dimensions.

e. Percolation test locations and results, and complete leachfield design (if required by Section 01010 of the SOW), which indicate the site will accommodate such a system for the given project requirements, and alternatives proposed if, and only if, the site characteristics will not support such a system.

f. Complete design analysis, plans and specifications for any contract feature(s) not already provided in the Contract that the Contractor would like Partial Clearance for Construction on once the Design Submittal has been approved, including project components with long ordering, fabrication and delivery times.

g. Outline of Construction Specification Sections to be used for other work yet to be submitted at the 90% Final Site-Adapt Design Review submittal, and those Specification items requiring Government Approval (GA), unless 100% Technical Specifications were provided with the Contract.

h. Well design at each project site location to include a determination of water demand, water availability evaluation, and water quality analysis. Water

demand evaluation shall be determined based on the requirements of the 01010 SOW and 01015 Technical Requirements. Water availability evaluation shall include data concerning study of existing water wells in the vicinity, study of hydrological data, and study of geological data. Well hydraulics data shall also be included from the test well or if available from vicinity wells. Water quality analysis shall include physical, chemical, and bacteriological analyses of water from either a test well or an existing well within the same aquifer of the proposed well.

Drawing for the well design shall include, at a minimum, material and dimensions of well pipe and casing, type and dimensions of screen, type and range of sizes of gravel surrounding screen and at bottom of well shaft, type of grouting for well seal, well pad, location and connection detail for hand pump if required by the 1010. Also required would be a detail of the wellhead with all associated valves, flowmeters, and chlorination system.

i. Preliminary drawing and details of any grease interceptors and oil-water separators required. Grease interceptors should either be gravity or hydro-mechanical types. Drawings would show sizing, depth, and all connecting piping. Design analysis shall include calculations for sizing both the interceptor/separator and connecting piping.

j. Preliminary cross sections of roads and sidewalks, showing all essential dimensions, materials, layers, and proposed fore and back slopes of adjacent drainage features.

k. All preliminary sketches of site storm drainage structures, including calculations in the design analysis for sizing and sloping of pipe runs and ditches. Provide cross sections of drainage structures such as ditches and culverts.

1.2.1.2 FINAL SITE-ADAPT DESIGN REVIEW (90%):

The review of this submittal is primarily to insure that the contract documents and design analysis are proceeding in a timely manner and that the Contract requirements and design criteria are being correctly understood and adhered to. The submittal shall consist of the following:

a. Design Analysis complete.

b. Draft Construction Specifications complete - all anticipated sections, edited to include only applicable requirements, if not provided as part of the Contract.

c. Construction Drawings complete with all 65% comments incorporated. The Contractor is expected to have completed all of his coordination checks and have the drawings in a design complete condition. The drawings shall be finalized at this time including the incorporation of any design review comments

generated by all past design reviews. The drawings shall contain all the details necessary to assure a clear understanding of the work throughout construction.

1.2.1.3 “CLEARED FOR CONSTRUCTION” SUBMITTAL (100%):

The review of this submittal is to insure that the design is in accordance with directions provided the Contractor during the design process. The only effort remaining between the Final Site-Adapt Design Review Submittal and the "Cleared For Construction" Design Review Submittal is the incorporation of all Government review comments. The Contractor shall submit the following documents for this review:

a. Design Analysis, only if changes have occurred since 90% Design Submittal. The Design Analysis shall contain all explanatory material giving the design rationale for any design decisions which would not be obvious to an engineer reviewing the Final Drawings and Specifications.

b. Construction Specifications, complete.

c. Construction Drawings, complete.

Once the design documents have been "Cleared for Construction" by the Contracting Officer, the Contractor shall clearly identify each document by annotating it as "Cleared for Construction."

1.2.2 PARTIAL DESIGN SUBMITTALS

In the interest of expediting construction, the Contracting Officer may approve partial design submittals, procurement of materials and equipment, as well as issue the Notice To Proceed (NTP) for construction of those elements of the design which have been cleared for construction. Such partial notices to proceed shall be solely at the discretion of the Contracting Officer. The Contractor must obtain the approval of the Designer of Record (DOR) and the Government’s concurrence for any Contractor proposed revision to the professionally stamped and sealed design reviewed and Cleared for Construction by the Government, before proceeding with the revision. The Government reserves the right to non-concur with any revision to the design, which may impact furniture, furnishings, equipment selections or operations decisions that were made, based on the reviewed and cleared for construction design. Any revision to the design, which deviates from the contract requirements (i.e., the RFP and the accepted proposal), will require a modification, pursuant to the Changes clause, in addition to Government concurrence. The Government reserves the right to disapprove such a revision. Unless the Government initiates a change to the contract requirements, or the Government determines that the Government furnished design criteria are incorrect and must be revised, any Contractor initiated proposed change to the contract requirements, which results in additional cost, shall strictly be at the Contractor's expense. The Contractor shall track all approved revisions to the reviewed and cleared for

construction design and shall incorporate them into the As-Built design documentation, in accordance with Section 01780A, CLOSEOUT SUBMITTALS, Paragraphs 1.1 and 1.2, which lists all requirements associated with submission of editable CADD format As-Builts required as part of this contract. The Designer of Record shall document its professional concurrence on the As-Builts for any revisions by affixing its stamp and seal on the drawings and specifications.

1.2.3 DEVIATIONS AND CHANGES TO THE STANDARD DESIGNS

**Contractor shall construct standard building designs as indicated.** Any request to deviate or change the standard building designs must be due to changed site conditions ONLY and submitted to the AED Resident Office administering the contract. Contractor shall indicate the changes and provide a narrative justification for the changes proposed.

1.2.4 USE OF DrChecks$_{SM}$ FOR DESIGN SUBMITTAL COMMENT AND RESPONSE

1.2.4.1 DrChecks$_{SM}$ WEB LINK

All AED Design Submittal review comments will be documented using the standard design review tool for the U.S. Army Corps of Engineers, a web-based application called "DrChecks$_{SM}$". The web link to DrChecks$_{SM}$ is: https://www.projnet.org/projnet/binKornHome/index.cfm

1.2.4.2 DrChecks$_{SM}$ VENDOR IDENTIFICATION AND TUTORIAL

Upon notification of award, the contractor shall immediately coordinate with the Chief, Engineering Branch, AED to acquire a vendor identification and a brief tutorial on the use of DrChecks$_{SM}$. The contractor is responsible for providing their own DrChecks$_{SM}$ Administrator within their own design staff personnel to access and accomplish actions within DrChecks$_{SM}$.

1.2.4.3 NOTIFICATION OF DrChecks$_{SM}$ FILE ACCESS

The Afghanistan Engineer District will complete a review at every Design Submittal stage for conformance with the technical requirements of the Contract and document all comments in DrChecks$_{SM}$. At completion of the review, a notification will be issued to the Contractor by the Contracting Officer's representative that the particular DrChecks$_{SM}$ file will be opened to the Contractor. Until this time, the Contractor is not able to view any AED comments for that particular Design Submittal.

1.2.4.4 FURTHER CONTRACTOR INFORMATION AFTER DrChecks$_{SM}$ REVIEWS

See Paragraph 3.7.4, Government Review, for further procedures and requirements associated with Design Submittal reviews.

## 1.2.5 CONSTRUCTION SUBMITTALS

### 1.2.5.1 Contractor Furnished Government Approved Construction Submittals (GA)

Government approved construction submittals are primarily related to plans (Contractor Quality Control, Accident Prevention, Resident Management System, Area Use, etc.), schedules (Project Schedule/Network Analysis), and certificates of compliance, reports and records/statements. They may also include proposed variations to approved design documents in accordance with the paragraph entitled "VARIATIONS".

In addition, GA construction submittals are required for the following:

a. CIVIL FEATURES

TESTING RESULTS: Data will include information on the locations and depths of all viable water supply sources at the site(s) involved and a water quantity and water quality analysis for each source from the Ministry of Public Health or other certified testing firm.

b. MECHANICAL FEATURES

EQUIPMENT SUBMITTALS: Manufacturer's standard catalog data, installation, Operation and Maintenance (O&M) manuals and construction details for water wells, water tanks, control valves, pipe insulation, water pumps, air handling units, condensers, variable air volume (VAV) boxes.

TESTING RESULTS: For water tanks, water pumps (including instrumentation), water piping, sprinkler systems, and oxygen systems, submit six (6) copies of each test containing the following information in bound letter-size booklets:

1) The date the tests were performed.

2) A list of equipment used, with calibration certifications.

3) A copy of measurements taken.

4) The parameters to be verified.

5) The condition specified for the parameter.

6) The inspection results, signed, dated, and certified by the installer. The certification shall state that required procedures were accomplished, that the procedures were conducted in compliance the plans and specifications.

7) A description of adjustments performed.

c. Individual reports shall be provided for storage tank tests, piping tests, system performance tests, high level alarm test, and the system leak tests. Drawings shall be folded blue lines, with the title block visible. ELECTRICAL FEATURES

PRODUCT DATA and SHOP DRAWINGS: generators (and its auxiliaries), load bank, transformers, substations, panels/switchboards/motor control centers, lightning protection, receptacles, circuit breakers.

DESIGN DATA: lightning protection and grounding.

TEST DATA: Lightning protection and grounding.

d. ARCHITECTURAL FEATURES

PRODUCT DATA/CATALOGUE CUTS/SHOP DRAWINGS/SCHEDULES: Specialty doors and frames (fire rated, sound rated, bullet resistant, security, overhead rolling); door hardware; windows; metal roofing (including fasteners, flashing, and accessories); building insulation; fire-rated and water-resistant gypsum board; and other specialty products (bullet resistant glazing/panels).

COLOR BOARD: Architectural finishes

PRODUCT DATA/CATALOGUE CUTS/INSTALLATION INSTRUCTIONS: Exterior Insulation and Finish System (EIFS)

SHOP DRAWINGS: Casework/Cabinetry

1.2.5.2 For Information Only Construction Submittals (FIO)

All submittals not requiring Designer of Record or Government approval will be for information only. These construction submittals shall be checked, stamped, signed and dated by the Contractor's Quality Control Engineer, certifying that such submittal complies with the contract requirements. All Contractor submittals shall be subject to review by the Government at any time during the course of the contract. Any Contractor submittal found to contain errors or omissions shall be resubmitted as one requiring "approval". No adjustment for time or money will be allowed for corrections required as a result of noncompliance with plans or specifications. Normally submittals For Information Only will not be returned. Approval of the Contracting Officer is not required on FIO submittals. These submittals will be used for information purposes. The Government reserves the right to require the Contractor to resubmit any item found not to comply with the contract. This does not relieve the Contractor from the obligation to furnish material conforming to the plans and specifications and will not prevent the Contracting Officer from requiring removal and replacement if nonconforming material is incorporated in the work.

1.2.5.3 Variations

After design submittals have been reviewed and cleared for construction by the Contracting Officer, no submittal for the purpose of substituting materials, equipment, systems, and patented processes will be considered by the Government unless submitted in accordance with the paragraph entitled VARIATIONS.

1.2.5.4 Additional Shop Drawings and Submittals

In accordance with the paragraph entitled DESIGN DISCREPANCIES, the Government may request the Design-Build Contractor to provide additional shop drawing and submittal type data subsequent to completion of the design.

1.2.5.5 Incomplete Design

The Design-Build Contractor shall not use construction submittals as a means to supplant and/or supplement an incomplete design effort.

1.3 SUBMITTAL CERTIFICATION

The CQC organization shall be responsible for certifying that all submittals and deliverables have been reviewed in detail for completeness, are correct, and are in strict conformance with the contract drawings, specifications, and reference documents.

1.3.1 Effective Quality Control System

The Contractor is responsible for quality control and shall establish and maintain an effective quality control system in compliance with Contract Clause 52.236-21 SPECIFICATIONS AND DRAWINGS FOR CONSTRUCTION - ALTERNATE I, and SECTION 01451 CONTRACTOR QUALITY CONTROL.

1.3.1.1 Organizational Responsibility

The quality control system shall cover all design, construction, subcontractor, manufacturer, vendor, and supplier operations at any tier, both onsite and offsite.

1.3.1.2 CQC System Manager Review and Approval

Prior to submittal, all items shall be checked and approved by the Contractor's Quality Control (CQC) System Manager. If found to be in strict conformance with the contract requirement, each item shall be stamped, signed, and dated by the CQC System Manager. Copies of the CQC organizations review comments indicating action taken shall be included within each submittal.

1.3.1.3 Determination of Compliance

Each submittal shall be complete and in sufficient detail to allow ready determination of compliance with contract requirements by the Contracting Officer. The contractor shall submit all required documentation with submittals. The U.S. Army Corps of Engineer (USACE) will not accept partial submittals.

1.3.2 Responsibility for Errors or Omissions

It is the sole responsibility of the Contractor to ensure that submittals do or do not comply with the contract documents. Government review, clearance for construction, or approval by the Contracting Officer shall not relieve the Contractor from responsibility for any errors or omissions in such drawings, nor from responsibility for complying with the requirements of this contract.

1.3.2.1 Government Review

Government review, clearance for construction, or approval of post design construction submittals shall not be construed as a complete check, but will indicate only that the general method of construction, materials, detailing and other information are satisfactory.

1.3.3 Substitutions

After design submittals have been reviewed and cleared for construction by the Contracting Officer, no re-submittal for the purpose of substituting materials or equipment will be considered unless justified as indicated in the paragraph entitled, “VARIATIONS.”

1.3.4 Additional Submittals

In conjunction with Contract Clause 52.236-5 MATERIAL AND WORKMANSHIP, the Contracting Officer may request submittals in addition to those specified when deemed necessary to adequately describe the work.

1.3.5 Untimely and Unacceptable Submittals

If the Contractor fails to submit submittals in a timely fashion, or repetitively submits submittals that are incomplete or not in strict conformance with the contract documents, no part of the time lost due to such actions shall be made the subject of claim for extension of time or for excess costs or damages by the Contractor.

1.3.6 Stamps

Stamps shall be used by the Contractor on all design and post design construction submittals to certify that the submittal meets contract requirements and shall be similar to the following:

Contractor (Firm Name)

Contract Number
Contract Name

I certify that this submittal accurate, is in strict conformance with all contract requirements, has been thoroughly coordinated and cross checked against all other applicable disciplines to prevent the omission of vital information, that all conflicts have been resolved, and that repetition has been avoided and, it is complete and in sufficient detail to allow ready determination of compliance with contract requirements by the Contracting Officer.

Name of CQC System Manager: _____

Signature of CQC System Manager: _____

Date: _____

## 1.4 ENGLISH LANGUAGE

All specifications, drawings, design analysis, design calculations, shop drawings, catalog data, materials lists, and equipment schedules submitted shall be in the English language.

## 1.5 UNITS OF MEASUREMENT

Design documents shall be prepared in accordance with the guidance offered in SECTION 01415 METRIC MEASUREMENTS.

The metric units used are the International System of Units (SI) developed and maintained by the General Conference on Weights and Measures (CGPM); the name International System of Units and the international abbreviation SI were adopted by the 11th CGPM in 1960.

### 1.5.1 Drawings

#### 1.5.1.1 Site Layout

All site layout data shall be dimensioned in meters or coordinates, as appropriate. All details and pipe sizes shall be dimensioned in millimeters.

EXAMPLE: Masonry openings shall be a U.S. module to suit a standard U.S. door. The dimensions of the opening shall be given in SI units. Metric dimensions for site plans shall be in meters and fraction thereof. Dimensions for all other drawings shall be in millimeters using hard metric designations (example: 12 meters = 12 000). Hard metric is defined as utilizing standard metric products and the use of measurements in increments of fifty (50) and one hundred (100) millimeters.

1.5.1.2 Geo-reference

All site plans shall be geo-referenced using the WGS 1984 coordinate system, specifically the following: WGS 1984 UTM one 42 N. If the designer is not able to use the stated coordinate system the coordinate system used shall be correlated to the stated coordinate system. A table shall be provided within the site drawing set cross referencing the WGS84 system to that utilized. This is required to allow AED to incorporate the plans into GIS for storage, map production, and possible geospatial analysis of the different work sites.

1.5.2 Design Calculations

Calculations shall be in SI units to meet the requirements of the design. Quantities on the contract drawings stated in SI units shall also be stated in SI units in the design analysis to match the drawings.

1.5.3 Specifications

All equipment and products shall be specified according to U.S. standards and described by appropriate units as required herein.

1.6 WITHHOLDING OF PAYMENT FOR SUBMITTALS

1.6.1 Design Submittals

Payment for Design work will not be made in whole or in part until the Government has reviewed and cleared the design for construction.

1.6.2 Construction Submittals

Payment for materials incorporated in the work will not be made if required approvals have not been obtained. In event under separate clause of the contract, the Contractor is allowed partial or total invoice payment for materials shipped from the Continental United States (CONUS), and/or stored at the site, the Contractor shall with his request for such payment, submit copies of approvals (ENG Form 4025) certifying that the materials that are being shipped and/or stored have been approved and are in full compliance with the contract technical specifications.

PART 2 PRODUCTS

2.1 GENERAL

The following are contract deliverables which expound upon and finalize the design parameters/requirements outlined within the contract documents. They shall be prepared in such a fashion that the Prime Contractor is responsible to the Government and not as an internal document between the Prime Contractor and its Subcontractors, Vendors, Suppliers, etc.

## 2.2 PROJECT NARRATIVE

The Project Narrative shall be a bound set and shall contain the contract Request For Proposal (RFP) Sections 01010 and 01015 (and any additional RFP sections that are appropriate). The RFP Section 01010 and 01015 shall be the latest version. Any subsequent changes to the RFP shall be clearly marked and highlighted with explanation for the changes. The Project Narrative shall also contain the general description of the project and a discussion of the design approach and design features for the project.

## 2.3 DESIGN ANALYSIS

### 2.3.1 Submittal

**Only design analyses associated with the "Site Adapt" features of this contract shall be submitted for review**. It shall be written in the English language with SI units of measure. The design analysis is a written explanation of the project design which is expanded and revised (updated) as the design progresses. The design analysis shall contain all explanatory material giving the design rationale for any design decisions which would not be obvious to an engineer reviewing the final drawings and specifications. The design analysis contains the criteria for, and the history of, the project design, including criteria furnished by the Government, letters, codes, references, conference minutes, and pertinent research. Design calculations, computerized and manual, are included in the design analysis. Narrative descriptions of design solutions are also included. Written material may be illustrated by diagrams and sketches to convey design concepts. Catalog cuts and manufacturer's data for all equipment items, shall be submitted. Specific requirements for the design analysis, listed by submittal phase, are noted in Paragraph 1.2.1.

### 2.3.2 Format

Format of design analysis shall closely match the standard format referenced within the RFP.

## 2.4 DESIGN CALCULATIONS

**Only calculations associated with the "Site Adapt" features of this contract shall be submitted for review, unless site conditions mandate changes to drawings and specifications furnished with this Contract**. All design calculations shall be presented such that they are easily understood, correlated with RFP requirements (Section 1010 and 1015 criteria; codes; all other applicable or pertinent criteria) and all final conclusions clearly documented and summarized. The Design Submittal must include complete information (Soil Report, percolation test results, concrete design strengths, steel material properties, electrical loads, heat gain/loss assumptions, etc.) necessary to support all design calculations in

order to easily and efficiently verify the accuracy of this information and the resulting project components shown in plans and specifications.

### 2.4.1 Submittal

When design calculations are voluminous, they shall be bound separately from the narrative part of the design analysis. Design calculations will include a title page, table of contents, and be indexed (tabbed) to separate distinct parts of the various analysis and design actions being accomplished to support plan drawings submitted. They shall be presented in a clear, consistent and legible format in order to quickly understand the analysis and design accomplished. Presentation shall be such that a person unfamiliar with the project features and associated analysis and design can quickly understand the overall design process and procedures, review the information in conjunction with the given set of plans and specifications, and verify the suitability of all information submitted.

All design calculations shall explain the source of loading conditions with assumptions and conclusions explained. The analysis and design methods shall also be explained, including assumptions, theories and formulae. Include applicable diagrams that are clearly explained and correlated with related computations, whether computer or hand generated. The design calculations shall include a complete and comprehensive list of the criteria (and date or version of the criteria) that the design/analysis will be compared to (codes, Corps of Engineers Engineering Regulations, Engineering Manuals, etc.). Within the separable elements of design calculations, the engineer shall cite the specific code or reference paragraph or section as appropriate to indicate conformance to requirements.

At the beginning of each project component design section, present a summary of all load conditions and combinations required per applicable code or Corps of Engineers manual or regulation. Then clearly identify the particular load case governing the design and clearly show how the particular analysis, construction materials to be used, and the specific design meet the governing load combination.

Calculation sheets shall carry the names or initials of the engineer and the checker and the dates of calculations and checking. No portion of the calculations shall be computed and checked by the same person.

### 2.4.2 Computer Analysis

Provide a clear summary of all computer outputs and highlight in the outputs information used in the analysis and design accomplished elsewhere in the calculations.

If a computerized analysis or design program is used (either commercial software packages or unique, designer-written computer analysis/design tools), the

computations shall provide clear reference to the software program and version being used and an explanation of the validity of the particular program to the given application (where has the program been used before, what input and output does the program provide, is the program a recognized Corps of Engineers or industry standard). If the program is proprietary to the Contractor (not recognized by the Corps of Engineers or industry), the Contractor shall provide a sample hand calculation to verify the results of one set of data generated by the computer program.

State exactly the computation performed by the computer. Include applicable diagrams, adequately identified. Provide all necessary explanations of the computer printout format, symbols, and abbreviations. Use adequate and consistent notation. Provide sufficient information to permit manual checks of the results.

Each set of computer printouts shall be preceded by an index and by a description of the computation performed. If several sets of computations are submitted, they shall be accompanied by a general table of contents in addition to the individual indices.

When the computer output is large, it shall be divided into volumes at logical division points. All final computer results used in design shall be separated from the total pages of computer output that might be included in the design calculations for ease of review.

## 2.5 SPECIFICATIONS

**Specifications for most work associated with this Contract have been furnished to the Contractor and only portions of them should be submitted for review with the "Site Adapt" portion of the work.** If the Contractor determines that work associated with the "Site Adapt" features of this contract require additional specifications, they shall be submitted for review and approval. These additional specifications shall be prepared in accordance with the Construction Specifications Institute (CSI) format to match the format of specifications provided in the Contract.

### 2.5.1 Use of Unified Facilities Guide Specifications (UFGS)

If additional specifications are deemed necessary by the Contractor, UFGS (Uniform Federal Guide Specifications) are required when U.S. products and systems are required or used. Current UFGS information may be obtained at the following location: http://www.wbdg.org/ccb/browse_org.php?o=70.

Specifications for UFGS are in SpecsIntact format. SpecsIntact is government sponsored software used to edit specifications for government contracts. The software is available at the following link: http://specsintact.ksc.nasa.gov/index.asp.

2.5.2 Quality Control and Testing

Any additional specifications deemed necessary by the Contractor shall include required quality control and further indicate all testing to be conducted by the Contractor, its subcontractors, vendors and/or suppliers.

2.5.3 Ambiguities and indefinite specifications

Ambiguities, indefinite specification requirements (e.g., highest quality, workmanlike manner, as necessary, where appropriate, as directed etc) and language open to interpretation is unacceptable.

2.5.4 Industry Standards

2.5.4.1 U.S. Industry Standards

The Specifications shall be based on internationally accepted U.S. industry Standards. Customarily accepted publications may be found in the UNIFIED MASTER REFERENCE LIST (UMRL) which may be located at the following URL: http://www.hnd.usace.army.mil/techinfo/UFGS/UFGSref.htm.

To access the UMRL select the “Unified Facilities Guide Specifications” tab and scroll down to Unified Master Reference List (UMRL) (PDF version).

Examples of U.S. standards are: National Fire Protection Association (NFPA), International Building Code (IBC), American Concrete Institute (ACI), American Water Works Association (AWWA), ADAAG (ADA Accessibility Guidelines) for Buildings and Facilities, etc. Standards referenced shall be by specific issue; the revision letter, date or other specific identification shall be included.

This document lists publications referenced in the Unified Facilities Guide Specifications (UFGS) of the Corps of Engineers (USACE), the Naval Facilities Engineering Command (NAVFAC), the Air Force Civil Engineer Support Agency (AFCESA), and the guide specifications of the National Aeronautics and Space Administration (NASA). This document is maintained by the National Institute of Building Sciences (NIBS) based on information provided by the agencies involved and the standards producing organizations. The listing is current with information available to NIBS on the date of this publication.

Standards referenced in specifications and drawings prepared by the Contractor shall be by specific issue; the revision letter, date or other specific identification shall be included.

2.5.4.2 Non U.S. Industry Standards

If non-U.S. industry standards (e.g., codes, regulations, or technical references and norms) are authorized for use under this contract and are incorporated in the Contractor's design, one (1) copy of each standard referenced shall be provided to the Government.

Where a U.S. design and/or construction standard cannot be referenced due to non-availability of products and/or systems, another specification format using the CSI guidelines may be utilized for that particular product and/or system. If a majority of the specifications within this project reference non-U.S. products due to availability and/or other factors, the entire set of specifications are not required to be in UFGS and SpecsIntact format.

## 2.6 DRAWINGS

### 2.6.1 Computer Assisted Design and Drafting (CADD)

Computer Assisted Design and Drafting (CADD) is required for all work related to this contract. The CADD deliverables shall meet the requirements of the A/E/C CADD Standard (Release 3.0). Emphasis is on drawings meeting sheet layout standards, level/layer naming standards and sheet naming conventions. The CADD standards may be downloaded at the CAD/BIM Technology Center at the following link: https://cadbim.usace.army.mil/default.aspx?p=s&t=13&i=4.
The Contractor shall furnish all softcopy design submittals (and As-Builts) using software applications in either .dwg (AutoCAD, AutoDesk release 2005 or later) or in .dgn (MicroStation, Bentley Systems version 8.0 or later) format. In addition, the Contractor is required to submit the softcopy design submittals in .pdf (Adobe Acrobat) format. Drawings prepared in any convention other than CADD, must have the written approval of the Contracting Officer.

### 2.6.2 Drawings

Drawings shall be prepared in the English language with metric (SI) units of measure. All the drawings and details of the working drawings shall be adequately labeled and cross-referenced. Complete, thoroughly checked, and coordination with other engineering disciplines design drawings shall be submitted. At the final design submittal (100%) the Contractor shall have incorporated all design review comments generated by previous design review(s), have completed all of the constructability and coordination comments, and have the drawings in a Ready-to-Build condition. The drawings shall be complete at this time and contain all the details necessary to ensure a clear understanding of the work throughout construction.

### 2.6.3 Drawing Size Border Sheets

All drawings shall be prepared in size "A1" border sheets (594mm by 841mm). Hardcopy design submissions may be printed on half size drawing sheets (“A3”, 279 mm by 420 mm) for purposes of saving paper and for ease of review. If

drawings are not readable in the half size reduction, the Contractor shall submit all drawings in A1 border sheets. All final contract drawing sets (As-Builts) shall be submitted on A1 border sheets. Drawing sheets shall be trimmed to specified size if necessary.

2.6.4 Sequence of Design Drawings

Referencing the A/E/C CADD Standard (pg. 13, Table 2-1 of the A/E/C CADD standards) the sequence of drawings shall follow the sequence as shown below:

Discipline

1. General
2. Hazardous Materials
3. Survey/Mapping
4. Geotechnical
5. Civil
6. Landscape
7. Structural
8. Architectural
9. Interiors
10. Equipment
11. Fire Protection
12. Plumbing
13. Process
14. Mechanical
15. Electrical
16. Telecommunications
17. Resource
18. Other Disciplines
19. Sub-Contractor/Shop Drawings
20. Operations

2.6.5 Drawing Folder Structure

CADD files shall be organized in a folder structure to what is described in Paragraph 2.6.4. For multi-building projects a folder of each building type shall be created and the applicable folders shown in each building type folder.

2.6.6 Drawing Sheet Assembly

CADD files shall be organized to what is described in “Option 2 – Use of Design Model Only” (page 10, Figure 2-3 of the A/E/C CADD Standard). This method will utilize one view and the use of “paper space” is not used. The border sheet shall be X-REF into each model file and scaled up to the applicable scale.

2.6.7 Model Files

Model files represent the building's physical layout and components such as floor plans and elevations. Model files shall be drawn to full size (1:1) in the default view. Floor Plan Model files represent one floor. Model files shall have coordinates (x,y,z) of 0,0,0 in paper space on layout. The exception for model files with coordinates 0,0,0 shall be the civil site plan (see section 1.5.1.2 Georeferencing).

2.6.8 Border Sheet Files

Border sheet files are used to assemble model files for plotting and viewing purposes. Every border sheet file has a drawing area, title block, border and represents one plotted drawing.

2.6.9 Layer/Level names

Layer or level files names shall follow the guidelines of appendix A and B of the A/E/C CADD standards. For AutoCAD, .dwt (drawing template files) shall be used to import the proper layers that will be inclusive of the correct line type, color, and line thickness of the respective layer.

2.6.10 Drawing File Naming Convention

CADD files shall follow the naming convention as described in the A/E/C CADD Standards. For model files reference pg 12 - 16, figure 2-4, tables 2-1 and 2-2. for sheet files reference pg 18 – 22, figure 2-5, table 2-3.

2.6.11 Sheet Identification Block

The sheet identifier will follow the name of the border sheet file. This will consist of the discipline designator, the sheet type designator and the sheet sequence number as referenced in pg 23, figure 2-6 of the A/E/C CADD Standards.

2.6.12 Drawing Scales

The scales indicated on the following list shall, in general, be used for all drawings. The Contractor may, at its option, make exceptions to scales indicated, if approved in writing by the Contracting Officer.

| **TYPICAL DRAWING SCALES** | |
|---|---|
| **DRAWING TYPE** | **METRIC** |
| SITE PLAN | 1:200 |
| | 1:400 |
| | 1:500 |
| | 1:600 |
| | 1:700 |
| | 1:1000 |
| | 1:2000 |

| | |
|---|---|
| | 1:5000 |
| | 1:6000 |
| | 1:10000 |
| | 1:20000 |
| FLOOR PLAN | 1:50 |
| | 1:100 |
| | 1:200 |
| ROOF PLAN | 1:200 |
| EXTERIOR ELEVATIONS | 1:100 |
| | 1:200 |
| INTERIOR ELEVATIONS | 1:50 |
| | 1:100 |
| CROSS SECTIONS | 1:50 |
| | 1:100 |
| | 1:200 |
| WALL SECTIONS | 1:20 |
| STAIR DETAILS | 1:10 |
| DETAILS | 1:5 |
| | |

2.6.13 Symbols, Line styles, & Patterns

Approved symbols, line styles, and patterns shall be in accordance with AEC CAD Standard Release 3.0 or current version (see Appendix D of the A/E/C CADD Standards). The approved symbols, line styles, and patterns associated with AutoCAD software maybe downloaded in the following link: https://tsc.wes.army.mil/products/standards/aec/aecstdsym.asp

2.6.14 Plotter Prepared Original Drawings

Plotter prepared original drawings shall be prepared on 20 pound bond paper, unless otherwise approved and shall be plotted on the matte side. Raster plotters must provide a minimum resolution of 400 dpi while vector plotters shall provide a minimum resolution of 0.0010 inch with an accuracy of +0.1% of the move and a repeatability error of not more than 0.005 inch. Drawings produced from dot matrix plotters are not acceptable. Plots accompanied by the digital design file may be prepared on vellum: translucent bond is not acceptable. Line density shall be equivalent to that produced by black India ink: half tone plots are only acceptable where the half-tone color setting of RGB (red, green blue) settings equal a value of 153 (see pg. 27, Table 3-4 of the A/E/C CADD Standards). Drawings plotted in color is not acceptable. Manual changes to plotted originals are not acceptable.

2.6.15 Title and Revision Block

Title and revision block shall match examples shown in SITE ADAPT 1335a-Attachments-AED.pdf, Figures 1 through 4, furnished as an attachment to this RFP.

2.6.16 Legends

For each submittal, legends of symbols and lists of abbreviations shall be placed on the drawings. They shall include all of the symbols and abbreviations used in the drawing set, but shall exclude any symbols and abbreviations not used. Since many symbols are limited to certain design disciplines, there is a definite advantage to the use of separate legends on the initial sheet of each design discipline or in the Standard Details package for each discipline. If legends have not been shown by discipline, a legend shall be placed on the first drawing.

2.6.17 Location Grid

To facilitate the location of project elements and the coordination of the various disciplines' drawings, all plans shall indicate a column line or planning grid, and all floor plans (except structural plans) shall show room numbers.

2.6.18 Composite and Key Plans

If the plan of a large building or structure must be placed on two or more sheets in order to maintain proper scale, the total plan shall be placed on one sheet at a smaller scale. Appropriate key plans and match lines shall appear on segmented drawings. Key plans shall be used not only to relate large scale plans to total floor plans but also to relate individual buildings to complexes of buildings. Key plans shall be drawn in a convenient location and shall indicate the relative location of the represented plan area by crosshatching.

2.6.19 Specifications Placed on the Drawings

Details of standard products or items which are adequately covered by specifications shall not be included on the drawings.

2.6.20 Revisions

Drawing revisions shall be prepared only on the original CADD files. A revision area is required on all sheets.

2.6.21 Binding

All volumes of drawing prints shall be firmly bound and shall have covers of heavier bond than the drawing sheets. If posts are used to fasten sheets together, the drilled holes on the bond edges of the sheets shall be on 8-1/2-inch centers.

2.6.22 Government Provided files

At the Preconstruction meeting, the Contractor shall be provided a CD that shall contain the AED border sheet, the A/E/C CADD standards, and various other files related to the compliancy of CADD files to the A/E/C CADD standards.

# PART 3 EXECUTION

## 3.1 GENERAL

### 3.1.1 Design Concept Coordination Meeting

Shortly after Notice To Proceed (NTP) the Government or contractor may suggest meeting(s) to review the Design Submittal process or discuss various aspects of the contract to enable prompt and efficient initiation of contract actions. Meeting(s) will be held to assure attention is focused on key project requirements (necessary contractor design and Government review that is required to provide Construction Clearance), to discuss features and items of work that need to be submitted early due to long lead time items, or discuss other concepts/ideas that will help accelerate the contract work. Other Design Coordination meetings may be requested throughout the contract period if Government review of various contractor Design Submittals indicate poor design and plan or specification quality in order to clearly explain the changes and improvements required of the contractor, assure understanding of Government comments, code references and required investigations and calculations, to move forward with acceptable design and satisfactory plans and specifications.

### 3.1.2 Government Design Changes

Government design changes which do not increase construction costs shall be made at no charge to the Government. The Contracting Officer may request design submittals in addition to those listed when deemed necessary to adequately describe the work covered in the contract documents. Submittals shall be made in the respective number of copies and to the respective addresses set forth in the paragraph entitled SUBMITTAL PROCEDURE. Each submittal shall be complete and in sufficient detail to allow ready determination of compliance with contract requirements.

## 3.2 SUBMITTAL REGISTER

### 3.2.1 Design Submittals

The Contractor shall submit as part of his Project Schedule Design Submittal milestone dates. The Contractor shall post all actual dates of submittal actions (including clearance for construction) as they occur.

### 3.2.2 Construction Submittal Register (ENG Form 4288)

Attached to this section is ENG Form 4288 which the Contractor is responsible for developing for this contract. All design and construction submittals shall be shown on this register. The submittal register shall be the controlling document and will be used to control all submittals throughout the life of the contract. The Contractor

shall maintain and update the register on a monthly basis for the Contracting Officer's approval.

## 3.3 TRANSMITTAL FORM (ENG Form 4025)

The sample transmittal form (ENG Form 4025) attached to this section shall be used for submitting both design and construction submittals in accordance with the instructions on the reverse side of the form. These forms will be furnished to the Contractor. This form shall be properly completed by filling out all the heading blank spaces and identifying each item submitted. Special care will be exercised to ensure proper listing of the specification paragraph and/or sheet number of the contract drawings pertinent to the data submitted for each item.

## 3.4 PROGRESS SCHEDULE

The Contractor shall prepare and submit a design progress schedule to the Contracting Officer. The Critical Path Method (CPM) of network calculation shall be used to generate the Project Schedule. The progress schedule shall show, as a percentage of the total design price, the various items included in the contract and the order in which the Contractor proposes to carry on the work, with dates on which he will start the features of the work and the contemplated dates for completing same. Significant milestones such as review submittals shall be annotated. The Contractor shall assign sufficient technical, supervisory and administrative personnel to insure the prosecution of the work in accordance with the progress schedule. The Contractor shall correct the progress schedule at the end of each month and submit as required to the Contracting Officer. The approved Project Schedule shall be used to measure the progress of the work, to aid in evaluating time extensions, and to provide the basis of all progress payments.

## 3.5 SCHEDULING

### 3.5.1 Design Submittals

Adequate time (a minimum of fourteen (14) full calendar days exclusive of mailing time) shall be allowed for AED review and comment in DrChecks$_{SM}$. This time period starts on the next full day after delivery of the Design Submittal to AED. If the Contractor fails to submit design submittals in a timely fashion, or repetitively submits design submittals that are not in strict conformance with the Contract documents, no part of the time lost due to such actions shall be made the subject of claim for extension of time or for excess costs or damages by the Contractor.

### 3.5.2 Construction Submittals

Contractor furnished Government Approved Construction Submittals (GA) for items noted in Paragraph 1.2.5 of this Section, or others as required by the COR, shall be submitted to the Area or Resident Office, per directions given at the Pre-

Construction meeting. Adequate time (a minimum of fourteen (14) full calendar days exclusive of mailing time) shall be allowed for AED review and comment.

3.5.3 Post Design Construction Submittals

Submittals covering component items forming a system or items that are interrelated shall be scheduled to be coordinated and submitted concurrently. Certifications to be submitted with the pertinent drawings shall be so scheduled. Adequate time (a minimum of fourteen (14) full calendar days exclusive of mailing time) shall be allowed for review and approval. If the Contractor fails to submit post design construction submittals in a timely fashion, or repetitively submits submittals that are not in strict conformance with the Contract documents, no part of the time lost due to actions shall be made the subject of claim for extension of time or for excess costs or damages by the Contractor.

3.6 SUBMITTAL PROCEDURE

3.6.1 Design Submittals

3.6.1.1 Afghanistan Engineer District (AED)

One (1) half-size hard copy and two (2) soft copies (electronic version) of all design submittals (calculations, reports of field tests, design analysis, plans, specifications, etc) shall be transmitted to the Government at the following address, by means of ENG Form 4025:

AFGHANISTAN ENGINEER DISTRICT

(1) DHL, FEDEX, UPS or any other courier service:
U.S. Army Corps of Engineers
Afghanistan Engineer District
House # 1, St. #1 West
West Wazir Akbar High School
Behind Amani High School
Kabul, Afghanistan
Attention: Chief, Engineering Branch

The soft copy (electronic version) and CD case shall both be clearly labeled (hand written information is not acceptable – typed labels are required) with contract information (contract #, title, contractor name, specific design submittal stage including if it is a Resubmittal, date of submission, components of the submittal – design analysis, plans, specifications, and if more than one CD then state 1 of “X”, 2 of “X”, etc., anti-virus information below, etc.)

The Contractor shall scan the soft copy (electronic version) of each Design Submittal using most up-to-date version of recognized Industry-standard anti-virus software (Symantec, Norton, etc.) to insure that no viruses are contained in it prior

to acceptance by AED. The label shall indicate it has been scanned for viruses and the anti-virus software and version clearly indicated.

3.6.1.2 Resident/Area Engineer Office

Complete design submittals shall be provided to the Area and/or Resident Engineer Office such that these are received **at the same time** as these submittals are delivered to the AED address in Para. 3.6.1.1. At the Pre-Construction meeting, the Contractor will be furnished the Area and/or Resident Office address to which these submittals shall be provided along with the number and size of hard and soft (electronic version) copies required for these offices. As per Paragraph 3.6.1.1, soft copies are to be properly labeled and checked for viruses by the contractor prior to delivery.

3.6.1.3 Editable CADD Format As-Builts

This is a Design-Build project and in accordance with Contract Clause 52.227-7022 GOVERNMENT RIGHTS (UNLIMITED), the Government has non-exclusive rights to use the design on other projects. Therefore, the As-Builts furnished to the Government must be in an editable format. See Section 01780A CLOSEOUT SUBMITTALS, Paragraphs 1.1 and 1.2, for all requirements associated with submission of editable CADD format As-Builts required as part of this contract.

3.6.2 Post Design Construction Submittals

One (1) copy of all post design construction submittals shall be transmitted to:

AFGHANISTAN ENGINEER DISTRICT

(1) DHL, FEDEX, UPS or any other courier service:
U.S. Army Corps of Engineers
Afghanistan Engineer District
House # 1, St. #1 West
West Wazir Akbar High School
Behind Amani High School
Kabul, Afghanistan
Attention: Chief, Engineering Branch

3.6.3 Submittal Numbering System

Instructions on the numbering system to be used for construction submittals follows.

3.6.3.1 Submittals

Shop drawings and materials are listed on the Submittal Register (ENG Form 4288) as follows:

a. List is prepared according to contract specifications and drawings, picking up all items involved in the project.

b. This list is divided into sections as indicated in the specifications. For example:

| | | |
|---|---|---|
| Section | 01015 | "Technical Requirements" |
| Section | 01335 | “Design Submittals” |
| Section | 02831 | "Chain-Link Fence" |
| Section | 02710 | "Subdrainage System" |
| Section | 03300 | "Concrete For Building Construction" |
| Section | 04200 | "Masonry" |

3.6.3.2 Numbering procedures for transmittal on ENG FORM 4025

Each Specification Section will have various requirements for submittals (design information, product data, test reports, procedures, etc.) to the Government for Approval (GA) or For Information Only (FIO). Items from different Sections cannot be submitted on the same ENG Form 4025. When furnishing one or more items from the same Section at a given time, a single ENG Form 4025 can be used to identify and submit these items. Block ‘b” of the 4025 entitled “DESCRIPTION OF ITEM SUBMITTED” should provide an accurate and unique description of each item being proposed by the Contractor. Item numbers (block “a” of the 4025 entitled “ITEM NO.”) will be automatically generated in QCS for each ENG Form 4025. QCS will track and automatically generate the “ITEM NO.” for all following ENG Form 4025s for the same Section number. To illustrate, a transmittal for the 65% Design Submittal required by Section 01335 might have the following Items:

ITEM NO. 1 Topographic Information
ITEM NO. 2 Geotechnical Report
ITEM NO. 3 Foundation Design
ITEM NO. 4 65% Plans
ITEM NO. 5 Outline of Construction Specifications to be used

If this was the first submittal furnished by the Contractor for Section 01335, then a Transmittal Number of 01335-1 would be generated using QCS. As new transmittals are generated in QCS, the last digit of the transmittal is increased incrementally, as follows:

Transmittal No. 01335-2
Transmittal No. 01335-3
Transmittal No. 01335-4

and so forth. The first transmittal submitted from each Specification Section will be “-1”, in other words, there will never be a “Transmittal No. 01335-0”.

The above illustration is true for all other Specification Sections included in the Request for Proposal or in the Construction Specifications compiled by the Contractor in the prosecution of work under the RFP.

3.6.3.3 Resubmittals

Should the Contractor be required to resubmit any transmittal due to one or more items on that transmittal being Coded “C” (Cleared for Construction, except as noted in attached comments, Resubmission Required) or “E” (NOT Cleared for Construction, see attached comments, resubmission required) by the Government, QCS will be used to generate the same transmittal number followed by the number "-1" for the first resubmittal, "-2" for the second resubmittal, "-3" for the third resubmittal, etc.

> As an example, assume the 65% Design Submittal is provided to the Government as Transmittal 01335-9. Due to omissions or errors in that Submittal which result in a Code “E” being given, then the subsequent 65% Design Resubmittal #1 would be “Transmittal 01335-9.1”. Should a resubmittal again be necessary, it would be Design Resubmittal #2 and would be submitted as “Transmittal 01335-9.2”.

The purpose of this system is to avoid deviations from the Submittal Register and to track submittals in both RMS and DrChecks$_{SM}$. <u>It should be noted that a new transmittal number following the above system CANNOT be generated in QCS unless the prior transmittal has been given a Code.</u> If the Contractor is having difficulty generating the correct transmittal number, contact the COR to resolve the matter.

The Contractor use the above nomenclature and date of submission to the Government for Plan Cover Sheets; title blocks for all drawings; all Specification Cover Sheets; all specification pages; all Design Analysis Cover Sheets and associated pages; and similar labeling for all other documents included in the submittal.

See the attachment titled “SITE ADAPT 1335a-Attachments-AED.pdf” (Figures 1-4) for required Title Block Required Annotations drawing guidance.

3.6.4 Variations

If design or construction submittals show variations from the contract parameters and/or requirements, the Contractor shall justify such variations in writing, at the time of submission. Additionally, the Contractor shall also annotate block "h" entitled "variation" of ENG FORM 4025. After design submittals have been reviewed and cleared for construction by the Contracting Officer, no resubmittal for the purpose of substituting materials, equipment, systems, and patented processes will be considered unless accompanied by the following:

a. Reason or purpose for proposed variation, substitution, or revision.

b. How does quality of variation compare with quality of the specified item? This shall be in the form of a technical evaluation tabulating differences between the item(s) originally specified and what is proposed.

c. Provide a cost comparison. This shall include an acquisition and life cycle cost comparison.

d. For proprietary materials, products, systems, and patented processes a certification signed by an official authorized to certify in behalf of the manufacturing company that the proposed substitution meets or exceeds what was originally specified.

e. For all other actions, a certification signed by a licensed professional engineer or architect certifying that the proposed variation or revision meets or exceeds what was originally specified.

f. Advantage to the Government, if variation is approved, i.e. Operation and Maintenance considerations, better product, etc.

g. Ramifications and impact, if not approved.

If the Government review detects any items not in compliance with contract requirements or items requiring further clarification, the Contractor will be so advised. Lack of notification by the Contracting Officer of any non-complying item does not relieve the Contractor of any contractual obligation.

### 3.6.5 Non-Compliance

The Contracting Officer will notify the Contractor of any detected noncompliance with the requirements of this specification. The Contractor shall take immediate corrective action after receipt of such notice. Such notice, when delivered to the Contractor at the worksite, shall be deemed sufficient for the purpose of notification. If the Contractor fails or refuses to comply promptly, the Contracting Officer may issue an order stopping all or part of the work until satisfactory corrective action has been taken. No part of the time lost due to such stop orders shall be made the subject of claim for extension of time or for excess costs or damages by the Contractor.

## 3.7 REVIEW OF CONTRACTOR PREPARED DESIGN DOCUMENTS

### 3.7.1 General

The work under contract will be subject to continuous review by representatives of the Contracting Officer. Additionally, joint design review conferences with

representation by all organizations having a direct interest in the items under review may be held. The Contractor shall furnish copies of all drawings and related documents to be reviewed at the review conference on or before the date indicated by the Government. Additional conferences pertaining to specific problems may be requested by the Contractor or may be directed by the Contracting Officer as necessary to progress the work. The Contractor shall prepare minutes of all conferences and shall furnish two copies to the Contracting Officer within seven (7) days after the conference.

3.7.2 Independent Design Review

The Contractor shall have someone other than the Designer or Design Team perform an independent technical review of all specifications, drawings, design analysis, calculations, and other required data prior to submission to the Government. This review shall insure the professional quality, technical accuracy, and the coordination of all design analysis, drawings and specifications, and other services furnished under this contract have been accomplished. Work must be organized in a manner that will assure thorough coordination between various details on drawings, between the various sections of the specifications, and between the drawings and specifications. The Contractor shall thoroughly cross-check and coordinate all work until he is professionally satisfied that no conflicts exist, vital information has not been omitted, and that indefinite language open to interpretation has been resolved. Upon completion of this review, the Contractor shall certify that each design submittal is complete, accurate, is in strict conformance with all contract requirements, that repetition has been avoided, that all conflicts have been resolved, and that the documents have thoroughly coordinated and cross checked against all the applicable disciplines to prevent the omission of vital information.

3.7.3 Contractor's Quality Control Organization Review

The Contractor shall thoroughly review each submittal prior to submission to the Contracting Officer to assure it is complete, correct and unified. This review shall be for the purposes of eliminating errors, interferences, and inconsistencies, and of incorporating design criteria, review comments, specifications, and any additional information required. The Contractor will give evidence of such review of all items in each submittal ENG Form 4025, by annotating Column “g” (titled “For Contractor Use Code”) of this Form with the letter “A,” meaning the Contractor has reviewed it and is indicating it is “Approved as Submitted”. Design submittals submitted to the Contracting Officer without evidence of the above requirements or the Contractor's certified approval will be returned for resubmission. No part of the time lost due to such resubmissions shall be made the subject of claim for extension of time or for excess costs or damages by the Contractor.

3.7.4 Government Review

a. Within 14 days after Notice to Proceed, the Contractor shall submit, for approval, a complete design schedule with all submittals and review times indicated in calendar dates. The Contractor shall update this schedule monthly. After receipt, the Government will be allowed fourteen (14) full days to review and comment on all Design Submittals, except as noted below. This time period starts on the next full day after delivery of the Design Submittal to AED.

b. If a design submittal is deficient (errors on ENG Form 4025; incorrect drawing title block information; missing or incomplete features required in the submittal; etc.), it will be returned immediately without further review for correction and resubmission. The review time will begin when the corrected submittal is received. The Contractor may be liable for liquidated damages owed to the Government for returned design submittals due to deficiencies.

c. The contractor shall not begin construction work until the Government has reviewed the Contractor's Design Submittal and cleared it for construction. Clearance for construction does not mean Government approval. Government review shall not be construed as a complete check but will evaluate the general design approach and adherence to contract parameters. The Government Review is often limited in time and scope. Therefore, the Contractor shall not consider any review performed by the Government as an excuse for incomplete work.

d. Upon completion of the review the Contractor will be notified by the Contracting Officer Representative that the DrChecks$_{SM}$ file is open for viewing and response to AED comments. The Contracting Officer will indicate whether the Design Submittal, or portions thereof, has or has not been cleared for construction using the following action codes:

A – Cleared for Construction

B – Cleared for Construction, except as noted in attached comments

C – Cleared for Construction, except as noted in attached comments, resubmission required

E - NOT Cleared for Construction, see attached comments, resubmission required

FX – Receipt acknowledged, does not comply as noted with contract requirements.

These codes shall NOT be used by the Contractor.

Design submittals Cleared for Construction by the Contracting Officer shall not relieve the Contractor from responsibility for any design errors or omissions and

any liability associated with such errors, nor from responsibility for complying with the requirements of this contract.

3.7.4.1 Incorporation of Government Review Comments

a. The Contractor shall review each comment, furnish a complete response in DrChecks$_{SM}$ as to how the comment will be addressed in the Design Analysis, Plans and Specifications, or other Design Submittal stipulations required in this Contract. The Contractor will then incorporate each comment into the design submittal along with other work required at the next Design Submittal stage. The Contractor shall furnish disposition of all comments in DrChecks$_{SM}$, with the next scheduled submittal. The disposition shall identify action taken with citation of location within the relevant design document. Generalized statements of intention such as "will comply" or "will revise the specification" are not acceptable. During the design review process, comments will be made on the design submittals that will change the drawings and specifications. The Government will make no additional payments to the Contractor for the incorporation of comments. Review comments are considered part of the contract administration process.

b. If the Contractor disagrees technically with any comment or comments and does not intend to comply with the comment, he must clearly outline, with ample justification, the reasons for noncompliance within five (5) days after close of review period in order that the comment can be resolved.

c. The Contractor is cautioned that if he believes the action required by any comment exceeds the requirements of this contract, he should flag the comment in DrChecks$_{SM}$ as a scope change, and notify the COR in writing immediately.

d. If a design submittal is over one (1) day late in accordance with the latest design schedule, the Government review period may be extended 7 days. Submittal date revisions must be made in writing at least five (5) days prior to the submittal.

3.7.4.2 Conferences

As necessary, conferences will be conducted between the Contractor and the Government to resolve review comments.

A review conference may be held at the completion of AED review and subsequent Contractor response for each design submittal. The review conference will be held at the Corps District Office in Kabul, Afghanistan. The Contractor shall bring the personnel that developed the design submittal to the review conference.

3.7.4.3 Design Deficiencies

Design deficiencies noted by the Government shall be corrected prior to the start of design for subsequent features of work which may be affected by, or need to be built upon, the deficient design work.

3.7.5 Design Discrepancies

The Contractor shall be responsible for the correction of incomplete design data, omissions, and design discrepancies which become apparent during construction. The Contractor shall provide the Contracting Officer with a proposed recommendation for correcting a design error, within three (3) calendar days after notification by the Contracting Officer. The Contracting Officer will notify the Contractor of any detected noncompliance with the foregoing requirements. The Contractor shall take immediate corrective action after receipt of such notice. Such notice, when delivered to the Contractor at the worksite, shall be deemed sufficient for the purpose of notification. If the Contractor fails or refuses to comply promptly, the Contracting Officer may issue an order stopping all or part of the work until satisfactory corrective action has been taken. No part of the time lost due to such stop orders shall be made the subject of claim for extension of time or for excess costs or damages by the Contractor. Should extensions of design, fabrication plans and/or specific manufacturer's details be required as a result of a Government issued Change Order, the Government will make an equitable adjustment in accordance with Contract Clause 52.243-4 entitled CHANGES.

3.8 Phased or "Fast-Track" Design

3.8.1 General

If approved by the Government, design and construction sequencing may be effected on an incremental basis as each approved phase or portion (e.g., demolition, geotechnical, site work, exterior utilities, foundations, substructure, superstructure, exterior closure, roofing, interior construction, mechanical, electrical, etc.) of the design is completed.

3.8.2 Sequence of Design-Construction (Fast-Track)

After receipt of the Contract Notice to Proceed (NTP) the Contractor shall initiate design, comply with all design submission requirements and obtain Government review of each submission. The contractor may begin construction on portions of the work for which the Government has reviewed the final design submission and has determined satisfactory for purposes of beginning construction. The Contracting Officer will notify the Contractor when the design is cleared for construction. The Government will not grant any time extension for any design resubmittal required when, in the opinion of the Government, the initial submission failed to meet the minimum quality requirements as set forth in the contract.

3.8.3 Notice-to-Proceed for Limited Construction

If the Government allows the Contractor to proceed with limited construction based on pending minor revisions to the reviewed Final Design submission, no payment will be made for any in-place construction related to the pending revisions until they are completed, resubmitted and are satisfactory to the Government.

3.8.4 In-Place Construction Payment

No payment will be made for any in-place construction until all required submittals have been made, reviewed and are satisfactory to the Government.

3.8.5 Commencement of Construction

Construction of work may begin after receipt of the clearance for construction (Notice to Proceed) for each design phase. Any work performed by the Contractor prior to receipt of the clearance for construction, shall be at the Contractor's own risk and expense. Work cleared for construction that does not conform to the design parameters and/or requirements of this contract shall be corrected by the Contractor at no additional cost or time to the Government.

3.9 Conduct of Work

3.9.1 Performance

Perform the work diligently and aggressively, and promptly advise the Contracting Officer of all significant developments.

3.9.2 Telephone Conversations

Prepare a summary, and promptly furnish a copy thereof to the Contracting Officer, of all telephone conversations relating to the design work under this contract.

3.9.3 Cooperation with Others

Cooperate fully with other firms, consultants and contractors performing work under the program to which this contract pertains, upon being advised by the Contracting Officer that such firms or individuals have a legitimate interest in the program, have need-to-know status, and proper security clearance where required.

3.9.4 Technical Criteria

All designs, drawings, and specifications shall be prepared in accordance with the contract documents and with the applicable publications referenced therein. As soon as possible, the Contractor shall obtain copies of all publications applicable to this contract. Availability of publications (where to purchase) is contained in Specification Section 01420 entitled: SOURCES FOR REFERENCE PUBLICATIONS. Any deviations from the technical criteria contained in the contract documents or in the applicable publications, including the use of criteria

obtained from the user or other sources, must receive prior approval of the Contracting Officer. Where the technical criteria contained or referred to herein are not met, the Contractor will be required to conform his design to the same at his own time and expense.

3.9.5 Conflicts

Any conflicts, ambiguities, questions or problems encountered by the Contractor in following the criteria shall be immediately submitted in writing to the Contracting Officer with the Contractor's recommendations. Prior to submission to the Government the Contractor shall take appropriate measures to obtain clarification of design criteria requirements, to acquire all pertinent design information, and to incorporate such information in the work being performed.

3.9.6 Design Priorities

The design of this project shall consider the remote location and harsh environment of this project and the impact this will have on sources of technical supply, the cost of construction, the low level of maintenance, and the difficulty of obtaining replacement parts. Unless stated otherwise in this contract, the following design priorities shall be followed.

3.9.6.1 Construction Life Span

Permanent Construction. Buildings and facilities shall be designed and constructed to serve a life expectancy of more than 25 years, to be energy efficient, and to have finishes, materials, and systems that are low maintenance and low life cycle cost.

3.9.6.2 Operability

Systems including but not necessarily limited to mechanical, electrical, communications, etc., must be simple to operate and easy to maintain.

3.9.6.3 Standardization

Use of standardized materials, products, equipment, and systems is necessary to minimize the requirements for replacement parts, storage facilities, and service requirements.

3.9.6.4 Topographic Surveys, Easements, and Utilities

Unless otherwise stated in the contract, the Contractor will be responsible for detailed topographic mapping, available easements, and utility information for the project.

3.9.6.5 Horizontal and Vertical Control

The mapping shall be based on the base coordinate system. If the base system cannot be found, the surveyor shall use any established monuments. If monuments have been destroyed or do not exist, an assumed horizontal and vertical datum shall be established, using arbitrary coordinates of 10,000n and 10,000e and an elevation of 1,000 meters. The horizontal and vertical control established on site shall be a closed loop with third order accuracy and procedures. Provide three (3) concrete survey monuments at the survey site. All of the control points established at the site shall be plotted at the appropriate coordinate point and shall be identified by name or number, and adjusted elevations. The location of the project site, as determined by the surveyor shall be submitted in writing to the Contracting Officer. The site location shall be identified by temporary markers, approved by the Contracting Officer before proceeding with the surveying work.

3.9.6.6 Topography Requirements

A sufficient quantity of horizontal and vertical control shall be established to provide a detailed topographic survey at 1:500 scale with one quarter meter contour intervals minimum. Intermediate elevations shall be provided as necessary to show breaks in grade and changes in terrain.

The contours shall accurately express the relief detail and topographic shapes. In addition, 90 percent of the elevations or profiles interpolated from the contours shall be correct to within one-half of the contour interval and spot elevations shall be correct within plus or minus 20 millimeters.

Spot elevations affecting design of facilities shall be provided. Specifically, break points or control points in grades of terrain such as tops of hills, bottoms of ditches and gullies, high bank elevations, etc.

All surface and sub-surface structures features within the area to be surveyed shall be shown and identified on the topographic maps. In addition, these features shall be located by sufficient distance ties and labeled on the topographic sheets to permit accurate scaling and identification.

The location and sizes of potable, sanitary, electrical and mechanical utilities within the survey site shall be shown on the survey map. Sanitary manholes and appurtenances shall show top elevations and invert elevations.

3.9.7 Occupational Safety and Health Act

The facilities, systems, and equipment designed under this contract shall comply with the Occupational Safety and Health Act (OSHA), Code of Federal Regulations, Title 29, Chapter XVII, Parts 1910 and 1926. Any problems in incorporating these standards due to conflicts with other technical criteria shall be submitted to the Contracting Officer for resolution.

3.9.8 Asbestos Containing Materials

Asbestos containing material (ACM) will not be used in the design of new structures or systems. In the event no other material is available which will perform the required function or where the use of other material would be cost prohibitive, a waiver for the use of asbestos containing materials must be obtained from AED.

3.9.8.1 Existing Construction

Asbestos containing materials (ACM) presently included in existing construction to be rehabilitated or otherwise modified as a result of this project shall be removed and a non-asbestos containing material substituted in lieu thereof.

3.9.8.2 Suspected Asbestos Containing Materials

All such structures and systems shall be inspected to determine the presence or probable presence of ACM. When ACM is suspected, a documented survey will be performed. The survey will be developed into an abatement design and will be made a part of the design documents. In the event no other material is available which will perform the required function or the use of a substitute material would be cost prohibitive due to initial cost and tear-out of existing construction, a waiver for the retention of the asbestos containing material must be obtained from the Contracting Officer.

3.10 VALUE METHODOLOGY/VALUE ENGINEERING

The Contractor during the course of his design shall be alert for and shall identify those high-cost low-value items or areas which he considers may be accomplished in different ways that will increase the value of the project at the same or less cost. Potential value engineering study items shall be reported to the Value Engineer through the Contracting Officer.

3.10.1 Performance Oriented Value Engineering Change Proposal (VECP)

In reference to Contract Clause 52.248-3, "Value Engineering - Construction", the Government may refuse to entertain a "Value Engineering Change Proposal" (VECP) for those "performance oriented" aspects of the Contract Documents which were addressed in the Contractor's accepted contract proposal and which were evaluated in competition with other Proposers for award of this contract. For purposes of this clause, the term "performance oriented" refers to those aspects of the design criteria or other contract requirements which allow the Proposer or the Contractor certain latitude, choice of and flexibility to propose in its accepted contract offer a choice of design, technical approach, design solution, construction approach or other approach to fulfill the contract requirements. Such requirements generally tend to be expressed in terms of functions to be performed, performance required or essential physical characteristics, without dictating a specific process or specific design solution for achieving the desired result.

3.10.2 Prescriptive Oriented Value Engineering Change Proposal (VECP)

The Government may consider a VECP for those "prescriptive" aspects of the Solicitation documents, not addressed in the Contractor's accepted contract proposal or addressed but evaluated only for minimum conformance with the Solicitation requirements. For purposes of this clause, the term "prescriptive" refers to those aspects of the design criteria or other Solicitation requirements wherein the Government expressed the design solution or other requirements in terms of specific materials, approaches, systems and/or processes to be used. Prescriptive aspects typically allow the Proposers little or no freedom in the choice of design approach, materials, fabrication techniques, methods of installation or other approach to fulfill the contract requirements.

3.11 ATTACHMENTS

The following attachments form an integral part of this specification:

ENG FORM 4025-R, Mar 95 - Transmittal of Shop Drawings, Equipment Data, Material Samples, or Manufacturer's Certificate of Compliance (2 pages)

ENG FORM 4288-R, Mar 95 - Submittal Register

Figure 1 – AED Title Block

Figure 2 – AED Management Block

Figure 3 – AED Issue Block & Required Notations

Figure 4 – Border Sheet Size

-- End of Section -

SECTION 01415

**SECTION 01415**

**METRIC MEASUREMENTS**

## 1.1 REFERENCES

The publications listed below form a part of this specification to the extent referenced. The publications are referred to within the text by the basic designation only.

ASTM INTERNATIONAL (ASTM)

| | |
|---|---|
| ASTM E 621 | (1994; R 1999e1) Use of Metric (SI) Units in Building Design and Construction (Committee E-6 Supplement to E380) |
| ASTM SI 10 | (2002) American National Standard for Use of the International System of Units (SI): The Modern Metric System |

## 1.2 GENERAL

This project includes metric units of measurements. The metric units used are the International System of Units (SI) developed and maintained by the General Conference on Weights and Measures (CGPM); the name International System of Units and the international abbreviation SI were adopted by the11th CGPM in 1960. A number of circumstances require that both metric SI units and English inch-pound (I-P) units be included in a section of the specifications. When both metric and I-P measurements are included, the section may contain measurements for products that are manufactured to I-P dimensions and then expressed in mathematically converted metric value(soft metric) or, it may contain measurements for products that are manufactured to an industry recognized rounded metric (hard metric)dimensions but are allowed to be substituted by I-P products to comply with the law. Dual measurements are also included to indicate industry and/or Government standards, test values or other controlling factors, such as the code requirements where I-P values are needed for clarity or to trace back to the referenced standards, test values or codes.

## 1.3 USE OF MEASUREMENTS IN SPECIFICATIONS

Measurements in specifications shall be either in SI or I-P units as indicated, except for soft metric measurements or as otherwise authorized. When only SI or I-P measurements are specified for a product, the product shall be procured in the specified units (SI or I-P) unless otherwise authorized by the Contracting Officer. The Contractor shall be responsible for all associated labor and materials when authorized to substitute one system of units for another and for the final assembly and performance of the specified work and/or products.

### 1.3.1 Hard Metric

A hard metric measurement is indicated by an SI value with no expressed correlation to an I-P value. Hard metric measurements are often used for field data such as distance from one point to another or distance above the floor. Products are considered to be hard metric when they are manufactured to metric dimensions or have an industry recognized metric designation.

### 1.3.2 Soft Metric

a. A soft metric measurement is indicated by an SI value which is a mathematical conversion of the I-P value shown in parentheses (e.g. 38.1 mm (1-1/2 inches)). Soft metric measurements are used for measurements pertaining to products, test values, and other situations where the I-P units are the standard for manufacture, verification, or other controlling factor. The I-P value shall govern while the metric measurement is provided for information.

b. A soft metric measurement is also indicated for products that are manufactured in industry designated metric dimensions but are required by law to allow substitute I-P products. These measurements are indicated by a manufacturing hard metric product dimension followed by the substitute I-P equivalent value in parentheses (e.g., 190 x 190 x 390 mm (7-5/8 x 7-5/8 x 15-5/8inches)).

1.3.3 Neutral

A neutral measurement is indicated by an identifier which has no expressed relation to either an SI or an I-P value (e.g., American Wire Gage (AWG) which indicates thickness but in itself is neither SI nor I-P).

**1.4 COORDINATION**

Discrepancies, such as mismatches or product unavailability, arising from use of both metric and non-metric measurements and discrepancies between the measurements in the specifications and the measurements in the drawings shall be brought to the attention of the Contracting Officer for resolution.

**1.5 RELATIONSHIP TO SUBMITTALS**

Submittals for Government approval or for information only shall cover the SI or I-P products actually being furnished for the project. The Contractor shall submit the required drawings and calculations in the same units used in the contract documents describing the product or requirement unless otherwise instructed or approved. The Contractor shall use ASTM SI 10 and ASTM E 621 as the basis for establishing metric measurements required to be used in submittals.

-- End of Section --

SECTION 01451

# SPECIFICATION SECTION 01451

# CONTRACTOR QUALITY CONTROL

## PART 1: GENERAL

### 1.1 REFERENCES

The publications listed below form a part of this specification to the extent referenced. The publications are referred to within the text by the basic designation only.

U.S. ARMY CORPS OF ENGINEERS (USACE)

| | |
|---|---|
| ER 1110-1-12 (1993) | Quality Management |
| EM 385-1-1 | Safety and Health Requirements Manual |

### 1.2 PAYMENT

Separate payment will not be made for providing and maintaining an effective Quality Control program, and all costs associated therewith shall be included in the applicable unit prices or lump-sum prices contained in the Bidding Schedule.

## PART 2PRODUCTS (Not Applicable)

## PART 3EXECUTION

### 3.1 GENERAL REQUIREMENTS

The Contractor is responsible for quality control and shall establish and maintain an effective quality control system in compliance with the Contract Clauses and this specification section. The quality control system shall consist of plans, procedures, and organization necessary to produce an end product which complies with the contract requirements. The system shall cover all construction operations, both onsite and offsite, and shall be keyed to the proposed construction sequence. The site project superintendent will be held responsible for the quality of work on the job and is subject to removal by the Contracting Officer for non-compliance with the quality requirements specified in the contract. The site project superintendent in this context shall be the highest level manager responsible for the overall construction activities at the site, including quality and production. The site project superintendent shall maintain a physical presence at the site at all times, except as otherwise acceptable to the Contracting Officer, and shall be responsible for all construction and construction related activities at the site.

### 3.2 CQM TRAINING REQUIREMENT

Before project design and construction begin, the Contractor's Quality Control Manager is required to have completed the U.S. Army Corps of Engineers CQM course, or equivalent. The Construction Trades Training Center (CTTC) in Jalalabad, Afghanistan provides a course that satisfies the requirement. Courses are offered at regular intervals. For enrollment and course information contact CTTC at the following:

Mhd. Haris
e-mail: mharis@afghanreconstruction.org
Telephone: 0700 08 0602

Pervaiz
e-mail: adpzmuj@yahoo.com
Telephone: 0700 61 3133

## 3.3 QUALITY CONTROL PLAN

The Contractor shall furnish for review by the Government, not later than five (5) days after receipt of Notice-to-Proceed (NTP) the proposed Contractor Quality Control (CQC) Plan. The plan shall identify personnel, procedures, control, instructions, records, and forms to be used.

### 3.2.1 Content of the CQC Plan

The CQC Plan shall include, as a minimum, the following to cover all construction operations, both on site and off-site, including work by subcontractors, fabricators, suppliers and purchasing agents:

a. A description of the quality control organization, including a chart showing lines of authority and acknowledgment that the CQC staff shall implement the three phase control system for all aspects of the work specified. The staff shall include a CQC System Manager who shall report to the project superintendent.

b. The name, qualifications (in resume format), duties, responsibilities, and authorities of each person assigned a CQC function.

c. A copy of the letter to the CQC System Manager signed by an authorized official of the firm which describes the responsibilities and delegates sufficient authorities to adequately perform the functions of the CQC System Manager, including authority to stop work which is not in compliance with the contract. The CQC System Manager shall issue letters of direction to all other various quality control representatives outlining duties, authorities, and responsibilities. Copies of these letters shall also be furnished to the Government.

d. Procedures for scheduling, reviewing, certifying, and managing submittals, including those of subcontractors, offsite fabricators, suppliers, consultants, and purchasing agents. These procedures shall be in accordance with Specification 01335 SUBMITTAL PROCEDURES.

e. Control, verification, and acceptance testing procedures for each specific test to include the test name, specification paragraph requiring test, feature of work to be tested, test frequency, and person responsible for each test.

f. Procedures for tracking preparatory, initial, and follow-up control phases and control, verification, and acceptance tests including documentation.

g. Procedures for tracking construction deficiencies from identification through acceptable corrective action. These procedures shall establish verification that identified deficiencies have been corrected.

h. Reporting procedures, including proposed reporting formats.

i. A list of the definable features of work. A definable feature of work is a task which is separate and distinct from other tasks, has separate control requirements, and may be identified by

different trades or disciplines, or it may be work by the same trade in a different environment. Although each section of the specifications may generally be considered as a definable feature of work, there are frequently more than one definable features under a particular section. This list will be agreed upon during the coordination meeting.

3.2.2 Additional Requirements for Design Quality Control (DQC) Plan

The following additional requirements apply to the Design Quality Control

(DQC) plan:

(1) The Contractor shall provide and maintain a Design Quality Control (DQC) Plan as an effective quality control program which will assure that all services required by this design contract are performed and provided in a manner that meets professional architectural and engineering quality standards. As a minimum, all documents shall be technically reviewed by competent, independent reviewers identified in the DQC Plan. The same element that produced the product shall not perform the independent technical review (ITR). The Contractor shall correct errors and deficiencies in the design documents prior to submitting them to the Government.

(2) The Contractor shall include the design schedule in the master project schedule, showing the sequence of events involved in carrying out the project design tasks within the specific contract period. This should be at a detailed level of scheduling sufficient to identify all major design tasks, including those that control the flow of work. The schedule shall include review and correction periods associated with each item. This should be a forward planning as well as a project monitoring tool. The schedule reflects calendar days and not dates for each activity. If the schedule is changed, the Contractor shall submit a revised schedule reflecting the change within 7 calendar days. The Contractor shall include in the DQC Plan the discipline-specific checklists to be used during the design and quality control of each submittal. These completed checklists shall be submitted at each design phase as part of the project documentation. Example checklists can be found in ER 1110-1-12.

(3) The DQC Plan shall be implemented by an Design Quality Control Manager who has the responsibility of being cognizant of and assuring that all documents on the project have been coordinated. This individual shall be a person who has verifiable engineering or architectural design experience and is a registered professional engineer or architect. The Contractor shall notify the Contracting Officer, in writing, of the name of the individual, and the name of an alternate person assigned to the position.

The Contracting Officer will notify the Contractor in writing of the acceptance of the DQC Plan. After acceptance, any changes proposed by the Contractor are subject to the acceptance of the Contracting Officer.

3.2.3 Acceptance of Plan

Acceptance of the Contractor's plan is required prior to the start of construction. Acceptance is conditional and will be predicated on satisfactory performance during the construction. The Government reserves the right to require the Contractor to make changes in the CQC plan and operations including removal of personnel, as necessary, to obtain the quality specified.

3.2.4 Notification of Changes

Notification of Changes. After acceptance of the QC plan, the Contractor shall notify the Contracting Officer in writing a minimum of seven calendar days prior to any proposed change. Proposed changes are subject to acceptance by the Contracting Officer.

**3.3 COORDINATION MEETING**

After the Pre-construction Conference, before start of construction, and prior to acceptance by the Government of the Quality Control Plan, the Contractor shall meet with the Contracting Officer or Authorized Representative and discuss the Contractor's quality control system. The CQC Plan shall be submitted for review a minimum of 5 calendar days prior to the Coordination Meeting. During the meeting, a mutual understanding of the system details shall be developed, including the forms for recording the CQC operations, control activities, testing, administration of the system for both on-site and off-site work, and the interrelationship of Contractor's Management and control with the Government's Quality Assurance. Minutes of the meeting shall be prepared by the Government and signed by both the Contractor and the Contracting Officer. The minutes shall become a part of the contract file. There may be occasions when subsequent conferences will be called by either party to reconfirm mutual understandings and/or address deficiencies in the CQC system or procedures, which may require corrective action by the Contractor.

## 3.4 QUALITY CONTROL ORGANIZATION

### 3.4.1 Personnel Requirements

The requirements for the CQC organization are a CQC System Manager, and sufficient number of additional qualified personnel to ensure safety and contract compliance. Personnel identified in the technical provisions as requiring specialized skills to assure the required work is being performed properly will also be included as part of the CQC organization. The Contractor's CQC staff shall maintain a presence at the site at all times during progress of the work and have complete authority and responsibility to take any action necessary to ensure contract compliance. The CQC staff shall be subject to acceptance by the Contracting Officer. The Contractor shall provide adequate office space, filing systems and other resources as necessary to maintain an effective and fully functional CQC organization. Complete records of all letters, material submittals, shop drawing submittals, schedules and all other project documentation shall be promptly furnished to the CQC organization by the Contractor. The CQC organization shall be responsible to maintain these documents and records at the site at all times, except as otherwise acceptable to the Contracting Officer.

### 3.4.2 CQC System Manager

The Contractor shall identify an individual within his organization at the site of the work who shall be responsible for overall management of the CQC and have the authority to act in all CQC matters for the Contractor. The CQC system manager shall be a graduate engineer, graduate architect, or a graduate construction manager, with experience on construction projects similar in type to this contract OR a construction person with a minimum of ten (10) years in related work. The CQC System Manager shall be on the site at all times during construction and shall be employed by the Contractor. The CQC System Manager shall be assigned no other duties. An alternate for the CQC System Manager will be identified in the plan to serve in the event of the CQC system manager's absence. The requirements for the alternate will be the same as for the designated CQC manager.

### 3.4.3 Additional Requirement

In addition to the above experience and/or education requirements, the CQC System Manager shall have completed the course entitled "Construction Quality Management For Contractors". This course is periodically offered by the government, and inquiries as to the next course offering may be directed to the local construction field office.

### 3.4.4 Organizational Changes

The Contractor shall maintain the CQC staff at full strength at all times. When it is necessary to make changes to the CQC staff, the Contractor shall revise the CQC Plan to reflect the changes and submit the changes to the Contracting Officer for acceptance.

## 3.5 SUBMITTALS AND DELIVERABLES

Submittals, if needed, shall be made as specified in the STR titled SUBMITTAL PROCEDURES. The CQC organization shall be responsible for certifying that all submittals and deliverables are in compliance with the contract requirements.

## 3.6 CONTROL

Contractor Quality Control is the means by which the Contractor ensures that the construction, to include that of subcontractors and suppliers, complies with the requirements of the contract. At least three phases of control shall be conducted by the CQC System Manager for each definable feature of the construction work as follows:

3.6.1 Preparatory Phase.

This phase shall be performed prior to beginning work on each definable feature of work, after all required documents and materials are approved/accepted, and after copies are at the work site. This phase shall include:

a. A review of each paragraph of applicable specifications, reference codes, and standards. A copy of those sections of referenced codes and standards, in the English language unless specifically approved otherwise by the Contracting Officer, applicable to that portion of the work to be accomplished in the field shall be made available by the Contractor at the preparatory inspection. These copies shall be maintained in the field and available for use by Government personnel until final acceptance of the work.

b. A review of the contract drawings.

c. A check to assure that all materials and/or equipment have been tested, submitted, and approved.

d. A check to assure that provisions have been made to provide required control inspection and testing.

e. Examination of the work area to assure that all required preliminary work has been completed and is in compliance with the contract.

f. A physical examination of required materials, equipment, and sample work to verify that they are on hand, conform to approved shop drawings or submitted data, and are properly stored.

g. Reviews of the appropriate activity hazard analysis to ensure safety requirements are met.

h. Discussion of procedures for constructing the work including repetitive deficiencies, construction tolerances and workmanship standards for that feature of work.

i. A check to ensure that the Contracting Officer has accepted the portion of the plan for the work to be performed.

j. Discussion of the initial control phase.

k. The Government shall be notified at least 24 hours in advance of beginning any of the required action of the preparatory phase. This phase shall include a meeting conducted by the CQC system manager and attended by the superintendent, other CQC personnel (as

applicable), and the foreman responsible for the definable feature. The results of the preparatory phase actions shall be documented by separate minutes prepared by the CQC system manager and attached to the daily QC report. The Contractor shall instruct applicable workers as to the acceptable level of workmanship required in order to meet contract specifications.

3.6.2 Initial Phase.

This phase shall be accomplished at the beginning of a definable feature of work. The following shall be accomplished:

a. A check of preliminary work to ensure that it is in compliance with contract requirements. Review minutes of the preparatory meeting.

b. Verification of full contract compliance. Verify required control inspection and testing.

c. Establish level of workmanship and verify that it meets minimum acceptable workmanship standards. Compare with sample panels as appropriate.

d. Resolve all differences.

e. Check safety to include compliance with and upgrading of the safety plan and activity hazard analysis. Review the activity analysis with each worker.

f. The Government shall be notified at least 24 hours in advance of beginning the initial phase. Separate minutes of this phase shall be prepared by the CQC system manager and attached to the daily QC report. Exact location of initial phase shall be indicated for future reference and comparison with follow-up phases.

g. The initial phase should be repeated for each new crew to work on-site, or any time acceptable specified quality standards are not being met.

3.6.3 Follow-up Phase.

Daily checks shall be performed to assure continuing compliance with contract requirements, including control testing, until completion of the particular feature of work. The checks shall be made a matter of record in the CQC documentation. Final follow-up checks shall be conducted, and all noted deficiencies corrected, prior to the start of additional features of work that may be affected by the deficient work. The Contractor shall not build upon nor conceal non-conforming work.

3.6.4 Additional Preparatory and Initial Phases

Additional preparatory and initial phases may be required by the Contracting Officer on the same definable features of work if the quality of on-going work is unacceptable; if there are changes in the applicable QC staff or in the on-site production supervision or work crew; if work on a definable feature is resumed after a substantial period of inactivity; or if other problems develop.

## 3.7 TESTS

3.7.1 Testing Procedure

The Contractor shall perform tests specified or required to verify that control measures are adequate to provide a product that conforms to contract requirements. Upon request, the Contractor shall

furnish to the Government duplicate samples of test specimens for possible testing by the Government. Costs incidental to the transportation of samples or materials shall be borne by the Contractor.

Testing includes operation and/or acceptance tests when specified. A list of tests to be performed shall be furnished as a part of the CQC plan. The list shall give the test name, frequency, specification paragraph containing the test requirements, the personnel and laboratory responsible for each type of test, and an estimate of the number of tests required. The Contractor shall perform the following activities and record and provide the following data:

a. Verify that testing procedures comply with contract requirements.

b. Verify that facilities and testing equipment are available and comply with testing standards.

c. Check test instrument calibration data against certified standards.

d. Verify that recording forms and test identification control number system, including all of the test documentation requirements, have been prepared.

e. Results of all tests taken, both passing and failing tests, shall be recorded on the Quality Control report for the date taken. Specification paragraph/item reference, location where tests were taken, and the sequential control number identifying the test will be given. Actual test reports may be submitted later, if approved by the Contracting Officer, with a reference to the test number and date taken. An information copy of tests performed by an off-site or commercial test facility will be provided directly to the Contracting Officer. Failure to submit timely test reports, as stated, may result in nonpayment for related work performed and disapproval of the test facility for this contract.

## 3.8 COMPLETION INSPECTION

### 3.8.1 Punch-Out Inspection

Near the end of the work, or any increment of the work established by a time stated in the SPECIAL CONTRACT REQUIREMENTS Clause, "Commencement, Prosecution, and Completion of Work", or by the specifications, the CQC Manager shall conduct an inspection of the work. A punch list of items which do not conform to the approved drawings and specifications shall be prepared and included in the CQC documentation, as required by paragraph DOCUMENTATION. The list of deficiencies shall include the estimated date by which the deficiencies will be corrected. The CQC System Manager or staff shall make a second inspection to ascertain that all deficiencies have been corrected. Once this is accomplished, the Contractor shall notify the Government that the facility is ready for the Government Pre-Final inspection.

### 3.8.2 Pre-Final Inspection

The Government will perform the pre-final inspection to verify that the facility is complete and ready to be occupied. A Government Pre-Final Punch List may be developed as a result of this inspection. The Contractor's CQC System Manager shall ensure that all items on this list have been corrected before notifying the Government, so that a Final inspection with the customer can be scheduled. Any items noted on the Pre-Final inspection shall be corrected in a timely manner. These inspections and any deficiency corrections required by this paragraph shall be accomplished within the time slated for completion of the entire work or any particular increment of the work if the project is divided into increments by separate completion dates.

### 3.8.3 Final Acceptance Inspection

The Contractor's Quality Control Inspection personnel, plus the superintendent or other primary management person, and the Contracting Officer's Representative shall be in attendance at the final acceptance inspection. Additional Government personnel including, but not limited to, those from Base/Post Civil Facility Engineer user groups, and major commands may also be in attendance. The final acceptance inspection will be formally scheduled by the Contracting Officer based upon results of the Pre-Final inspection. Notice shall be given to the Contracting Officer at least 14 days prior to the final acceptance inspection and shall include the Contractor's assurance that all specific items previously identified to the Contractor as being unacceptable, along with all remaining work performed under the contract, will be complete and acceptable by the date scheduled for the final acceptance inspection. Failure of the Contractor to have all contract work acceptably complete for this inspection will be cause for the Contracting Officer to bill the Contractor for the Government's additional inspection cost in accordance with the contract clause titled "Inspection of Construction".

## 3.9 DOCUMENTATION

The Contractor shall maintain current records providing factual evidence that required quality control activities and/or tests have been performed. These records shall include the work of subcontractors and suppliers and shall be on an acceptable form that includes, as a minimum, the following information:

a. Contractor/subcontractor and their area of responsibility.

b. Operating plant/equipment with hours worked, idle, or down for repair.

c. Work performed each day, giving location, description, and by whom. When Network Analysis (NAS) is used, identify each phase of work performed each day by NAS activity number.

d. Test and/or control activities performed with results and references to specifications/drawings requirements. The control phase shall be identified (Preparatory, Initial, Follow-up). List of deficiencies noted, along with corrective action.

e. Quantity of materials received at the site with statement as to acceptability, storage, and reference to specifications/drawings requirements.

f. Submittals and deliverables reviewed, with contract reference, by whom, and action taken.

g. Offsite surveillance activities, including actions taken.

h. Job safety evaluations stating what was checked, results, and instructions or corrective actions.

i. Instructions given/received and conflicts in plans and/or specifications.

j. Contractor's verification statement.

These records shall indicate a description of trades working on the project; the number of personnel working; weather conditions encountered; and any delays encountered. These records shall cover both conforming and deficient features and shall include a statement that equipment and materials incorporated in the work and workmanship comply with the contract. The original and one copy of these records in report form shall be furnished to the Government daily within forty-eight (48) hours after the date covered by the report, except that reports need not be submitted for days on which no work is performed. As a minimum, one report shall be prepared and submitted for every 7 days of no work and on the last day of a no work period. All calendar days shall be accounted for throughout the

life of the contract. The first report following a day of no work shall be for that day only. Reports shall be signed and dated by the CQC System Manager. The report from the CQC System Manager shall include copies of test reports and copies of reports prepared by all subordinate quality control personnel.

## 3.10 SAMPLE FORMS

In accordance with Specification 01312 QUALITY CONTROL SYSTEM, the contractor shall use the forms produced by and printed from QCS. Samples of any forms required to meet the requirements of this section which are not produced by that system shall be included in the contractors Quality Control Plan.

## 3.11 NOTIFICATION OF NONCOMPLIANCE

The Contracting Officer will notify the Contractor of any detected noncompliance with the foregoing requirements. The Contractor shall take immediate corrective action after receipt of such notice. Such notice, when delivered to the Contractor at the work site, shall be deemed sufficient for the purpose of notification. If the Contractor fails or refuses to comply promptly, the Contracting Officer may issue an order stopping all or part of the work until satisfactory corrective action has been taken. No part of the time lost due to such stop orders shall be made the subject of claim for extension of time or for excess costs or damages by the Contractor.

-- End of Section --

# SECTION 01525

# SAFETY AND OCCUPATIONAL HEALTH REQUIREMENTS

## PART 1 GENERAL

For contractor safety on projects associated with this program, compliance with EM 385-1-1 safety requirements will be the long-term goal reached by growing a safety culture. This compliance will, by necessity, be achieved through a phased-in process. In the Commander's letter at the preface of the EM 385-1-1, he acknowledges that in OCONUS locations, strict compliance with the manual may not be possible – and through the hazard analysis process, safety measures can be developed to attain the same degree of safety.

This specification consists of two parts:

1) Sections 1.1 through 3.12.1, which are the standard safety specifications for work in Europe District and;

2) Appendix A, Phasing approach for safety in emerging countries where there is little or no national safety standards.

### 1.1 REFERENCES

The publications listed below form a part of this specification to the extent referenced. The publications are referred to within the text by the basic designation only.

AMERICAN NATIONAL STANDARDS INSTITUTE (ANSI)

| | |
|---|---|
| ANSI A10.32 | Personal Fall Protection - Safety Requirements for Construction and Demolition Operations |
| ANSI Z359.1(1992; R 1999) | Safety Requirements for Personal Fall Arrest Systems, Subsystems and Components |
| ANSI/ASSE A10.34(2001) | Protection of the Public on or Adjacent to Construction Sites |
| ASME B30.3(1996) | Construction Tower Cranes |

ASME INTERNATIONAL (ASME)

| | |
|---|---|
| ASME B30.22(2000) | Articulating Boom Cranes |
| ASME B30.5(2004) | Mobile and Locomotive Cranes |

NATIONAL FIRE PROTECTION ASSOCIATION (NFPA)

| | |
|---|---|
| NFPA 10(2002) | Portable Fire Extinguishers |

| | |
|---|---|
| NFPA 241(2000) | Safeguarding Construction, Alteration, and Demolition Operations |
| NFPA 51B(2003) | Fire Prevention During Welding, Cutting, and Other Hot Work |
| NFPA 70(2005) | National Electrical Code |
| NFPA 70E(2004) | Electrical Safety in the Workplace |

U.S. ARMY CORPS OF ENGINEERS (USACE)

| | |
|---|---|
| EM 385-1-1(2008) Safety | Safety and Health Requirements |

U.S. NATIONAL ARCHIVES AND RECORDS ADMINISTRATION (NARA)

| | |
|---|---|
| 29 CFR 1910 | Occupational Safety and Health Standards (OSHA) |
| 29 CFR 1910.146 | Permit-required Confined Spaces |
| 29 CFR 1915 | Confined and Enclosed Spaces and Other Dangerous Atmospheres in Shipyard Employment |
| 29 CFR 1919 | Gear Certification |
| 29 CFR 1926 | Safety and Health Regulations for Construction |
| 29 CFR 1926.500 | Fall Protection |

## 1.2 SUBMITTALS

Government approval is required for submittals with a "G" designation; submittals not having a "G" designation are for information only. When used, a designation following the "G" designation identifies the office that will review the submittal for the Government. The following shall be submitted in accordance with SR SUBMITTAL PROCEDURES:

SD-01 Preconstruction Submittals

Accident Prevention Plan (APP); G, ACC

Activity Hazard Analysis (AHA); G, ACC

Crane Critical Lift Plan; G, ACC

Proof of qualification for Crane Operators; G, ACC

SD-06 Test Reports

Reports: Submit reports as their incidence occurs, in accordance with the requirements of the paragraph entitled, "Reports."

Accident Reports

Monthly Exposure Reports

Crane Reports

Regulatory Citations and Violations

SD-07 Certificates

Confined Space Entry Permit

Contractor Safety Self-Evaluation Checklist; G, ACC

Submit one copy of each permit/certificate attached to each Daily Quality Control Report.

## 1.3 DEFINITIONS

a. Competent Person for Fall Protection. A person who is capable of identifying hazardous or dangerous conditions in the personal fall arrest system or any component thereof, as well as their application and use with related equipment, and has the authority to take prompt corrective measures to eliminate the hazards of falling.

b. High Visibility Accident. Any mishap which may generate publicity and/or high visibility.

c. Medical Treatment. Treatment administered by a physician or by registered professional personnel under the standing orders of a physician. Medical treatment does not include first aid treatment even through provided by a physician or registered personnel.

d. Qualified Person for Fall Protection. A person with a recognized degree or professional certificate, extensive knowledge, training and experience in the field of fall protection who is capable of performing design, analysis, and evaluation of fall protection systems and equipment.

e. Recordable Injuries or Illnesses. Any work-related injury or illness that results in:

(1) Death, regardless of the time between the injury and death, or the length of the illness;

(2) Days away from work (any time lost after day of injury/illness onset);

(3) Restricted work;

(4) Transfer to another job;

(5) Medical treatment beyond first aid;

(6) Loss of consciousness; or

(7) A significant injury or illness diagnosed by a physician or other licensed health care professional, even if it did not result in (1) through (6) above.

f. "USACE" property and equipment specified in USACE EM 385-1-1 should be interpreted as Government property and equipment.

## 1.4 DRUG PREVENTION PROGRAM

Conduct a proactive drug and alcohol use prevention program for all workers, prime and subcontractor, on the site. Ensure that no employee uses illegal drugs or consumes alcohol during

work hours. Ensure there are no employees under the influence of drugs or alcohol during work hours. After accidents, collect blood, urine, or saliva specimens and test the injured and involved employees for the influence of drugs and alcohol. A copy of the test shall be made available to the Contracting Officer upon request.

## 1.5 REGULATORY REQUIREMENTS

In addition to the detailed requirements included in the provisions of this contract, work performed shall comply with USACE EM 385-1-1.

## 1.6 SITE QUALIFICATIONS, DUTIES AND MEETINGS

### 1.6.1 Personnel Qualifications

#### 1.6.1.1 Site Safety and Health Officer (SSHO)

Site Safety and Health Officer (SSHO) shall be provided at the work site at all times to perform safety and occupational health management, surveillance, inspections, and safety enforcement for the Contractor. The Contractor Quality Control (QC) person can only be the SSHO on this project if approved by the Contracting Officer. Any project exceeding 1 Million US dollars in value shall have a full time SSHO. The SSHO shall meet the following requirements: A minimum of 1 year safety work on similar projects; 30-hour OSHA construction safety class or equivalent within the last 3 years;. Competent person training as needed.

#### 1.6.1.2 Competent Person for Confined Space Entry

Provide a competent person meeting the requirements of EM 385-1-1 who is assigned in writing by the Government Designated Authority (GDA) to assess confined spaces and who possesses demonstrated knowledge, skill and ability to:

a. Identify the structure, location, and designation of confined and permit-required confined spaces where work is done;

b. Calibrate and use testing equipment including but not limited to, oxygen indicators, combustible gas indicators, carbon monoxide indicators, and carbon dioxide indicators, and to interpret accurately the test results of that equipment;

c. Perform all required tests and inspections specified in Section 06.I of EM 385-1-1;

d. Assess hazardous conditions including atmospheric hazards in confined space and adjacent spaces and specify the necessary protection and precautions to be taken;

e. Determine ventilation requirements for confined space entries and operations;

f. Assess hazards associated with hot work in confined and adjacent space and determine fire watch requirements; and,

g. Maintain records required.

#### 1.6.1.3 Crane Operators

Crane operators shall meet the requirements in USACE EM 385-1-1, Section 16 and Appendix G.

1.6.2 Personnel Duties

1.6.2.1 Site Safety and Health Officer (SSHO)/Superintendent

a. Conduct daily safety and health inspections and maintain a written log which includes area/operation inspected, date of inspection, identified hazards, recommended corrective actions, estimated and actual dates of corrections. Safety inspection logs shall be attached to the Contractors' daily quality control report.

b. Conduct mishap investigations and complete required reports. Maintain an accident/injury log such as the OSHA Form 300 or host nation equivalent, and Daily Production reports for prime and sub-contractors.

c. Maintain applicable safety reference material on the job site.

d. Attend the pre-construction conference, pre-work meetings including preparatory inspection meeting, and periodic in-progress meetings.

e. Implement and enforce accepted APPS and AHAs.

f. Maintain a safety and health deficiency tracking system that monitors outstanding deficiencies until resolution. A list of unresolved safety and health deficiencies shall be posted on the safety bulletin board.

g. Ensure sub-contractor compliance with safety and health requirements.

Failure to perform the above duties will result in dismissal of the superintendent and/or SSHO, and a project work stoppage. The project work stoppage will remain in effect pending approval of a suitable replacement.

1.6.3 Meetings

1.6.3.1 Preconstruction Conference

a. Contractor representatives who have a responsibility or significant role in accident prevention on the project shall attend the preconstruction conference. This includes the project superintendent, site safety and health officer, quality control supervisor, or any other assigned safety and health professionals who participated in the development of the APP (including the Activity Hazard Analyses (AHAs) and special plans, program and procedures associated with it).

b. The Contractor shall discuss the details of the submitted APP to include incorporated plans, programs, procedures and a listing of anticipated AHAs that will be developed and implemented during the performance of the contract. This list of proposed AHAs will be reviewed at the conference and an agreement will be reached between the Contractor and the Contracting Officer's representative as to which phases will require an analysis. In addition, a schedule for the preparation, submittal, review, and acceptance of AHAs shall be established to preclude project delays.

c. Deficiencies in the submitted APP will be brought to the attention of the Contractor at the preconstruction conference, and the Contractor shall revise the plan to correct deficiencies and re-submit it for acceptance. Work shall not begin until there is an accepted APP.

d. The functions of a Preconstruction conference may take place at the Post-Award Kickoff meeting for Design Build Contracts.

1.6.3.2 Safety Meetings

Shall be conducted and documented as required by EM 385-1-1. Minutes showing contract title, signatures of attendees and a list of topics discussed shall be attached to the Contractors' daily quality control report.

## 1.7 TRAINING

1.7.1 New Employee Indoctrination

New employees (prime and sub-contractor) will be informed of specific site hazards before they begin work. Documentation of this orientation shall be kept on file at the project site.

1.7.2 Periodic Training

Provide Safety and Health Training in accordance with USACE EM 385-1-1 and the accepted APP. Ensure all required training has been accomplished for all onsite employees.

1.7.3 Training on Activity Hazard Analysis (AHA)

Prior to beginning a new phase, training will be provided to all affected

## 1.8 ACCIDENT PREVENTION PLAN (APP)

The Contractor shall use a qualified person to prepare the written site-specific APP in both English and in the host nation language. Prepare the APP in accordance with the format and requirements of USACE EM 385-1-1 and as supplemented herein. Cover all paragraph and subparagraph elements in USACE EM 385-1-1, Appendix A, "Minimum Basic Outline for Accident Prevention Plan". Specific requirements for some of the APP elements are described below. The APP shall be job-specific and shall address any unusual or unique aspects of the project or activity for which it is written. The APP shall interface with the Contractor's overall safety and health program. Any portions of the Contractor's overall safety and health program referenced in the APP shall be included in the applicable APP element and made site-specific. The Government considers the Prime Contractor to be the "controlling authority" for all work site safety and health of the subcontractors. Contractors are responsible for informing their subcontractors of the safety provisions under the terms of the contract and the penalties for noncompliance, coordinating the work to prevent one craft from interfering with or creating hazardous working conditions for other crafts, and inspecting subcontractor operations to ensure that accident prevention responsibilities are being carried out. The APP shall be signed by the person and firm (senior person) preparing the APP, the Contractor, the on-site superintendent, the designated site safety and health officer.

Submit the APP to the Contracting Officer 15 calendar days prior to the date of the preconstruction conference for acceptance. Work cannot proceed without an accepted APP.

Once accepted by the Contracting Officer, the APP and attachments will be enforced as part of the contract. Disregarding the provisions of this contract or the accepted APP will be cause for stopping of work, at the discretion of the Contracting Officer, until the matter has been rectified.

Once work begins, changes to the accepted APP shall be made with the knowledge and concurrence of the Contracting Officer, project superintendent, SSHO and quality control manager. Should any hazard become evident, stop work in the area, secure the area, and develop a plan to remove the hazard. Notify the Contracting Officer within 24 hours of discovery. In the interim, all necessary action shall be taken to restore and maintain safe working conditions in order to safeguard onsite personnel, visitors, the public, and the environment.

Copies of the accepted plan will be maintained at the Contracting Officer's office and at the job site.

The APP shall be continuously reviewed and amended, as necessary, throughout the life of the contract. Unusual or high-hazard activities not identified in the original APP shall be incorporated in the plan as they are discovered.

1.8.1 EM 385-1-1 Contents

In addition to the requirements outlines in Appendix A of USACE EM 385-1-1, the following is required:

a. Names and qualifications (resumes including education, training, experience and certifications) of all site safety and health personnel designated to perform work on this project to include the designated site safety and health officer and other competent and qualified personnel to be. The duties of each position shall be specified.

b. Qualifications of competent and of qualified persons. As a minimum, competent persons shall be designated and qualifications submitted for each of the following major areas: excavation; scaffolding; fall protection; hazardous energy; confined space; health hazard recognition, evaluation and control of chemical, physical and biological agents; personal protective equipment and clothing to include selection, use and maintenance.

c. Confined Space Entry Plan. Develop a confined space entry plan in accordance with USACE EM 385-1-1, Section 06.I, and any other federal, state and local regulatory requirements identified in this contract. Identify the qualified person's name and qualifications, training, and experience. Delineate the qualified person's authority to direct work stoppage in the event of hazardous conditions. Include procedure for rescue by contractor personnel and the coordination with emergency responders. (If there is no confined space work, include a statement that no confined space work exists and none will be created.)

d. Crane Critical Lift Plan. Prepare and sign weight handling critical lift plans for lifts over 75 percent of the capacity of the crane or hoist (or lifts over 50 percent of the capacity of a barge mounted mobile crane's hoists) at any radius of lift; lifts involving more than one crane or hoist; lifts of personnel; and lifts involving non-routine rigging or operation, sensitive equipment, or unusual safety risks. The plan shall be submitted 15 calendar days prior to on-site work and include the requirements of USACE EM 385-1-1, paragraph 16.C.18. and the following:

   (1) For lifts of personnel, the plan shall demonstrate compliance with the requirements of EM 385-1-1, Section 22.F.

   (2) For barge mounted mobile cranes, barge stability calculations identifying barge list and trim based on anticipated loading; and load charts based on calculated list and trim. The amount of list and trim shall be within the crane manufacturer's requirements.

e. Fall Protection and Prevention (FP&P) Plan. The plan shall be site specific and address all fall hazards in the work place and during different phases of construction. It shall address how to protect and prevent workers from falling to lower levels when they are exposed to fall hazards above 1.8 m (6 feet). A qualified person for fall protection shall prepare and sign the plan. The plan shall include fall protection and prevention systems, equipment and methods employed for every phase of work, responsibilities, assisted rescue, self-rescue and evacuation procedures, training requirements, and monitoring methods. Fall Protection and Prevention Plan shall be revised every six months for lengthy projects, reflecting any changes during the course of construction due to changes in personnel, equipment, systems or work

habits. The accepted Fall Protection and Prevention Plan shall be kept and maintained at the job site for the duration of the project. The Fall Protection and Prevention Plan shall be included in the Accident Prevention Plan (APP).

## 1.9 ACTIVITY HAZARD ANALYSIS (AHA)

The Activity Hazard Analysis (AHA) format shall be in accordance with USACE EM 385-1-1, and shall be written in both English and the host nation language. Submit the AHA for review at least 15 calendar days prior to the start of each phase. Format subsequent AHAs as amendments to the APP. The analysis should be used during daily inspections to ensure the implementation and effectiveness of the activity's safety and health controls.

The AHA list will be reviewed periodically (at least monthly) at the Contractor supervisory safety meeting and updated as necessary when procedures, scheduling, or hazards change.

The activity hazard analyses shall be developed using the project schedule as the basis for the activities performed. Any activities listed on the project schedule will require an AHA. The AHAs will be developed by the contractor, supplier or subcontractor and provided to the prime contractor for submittal to the Contracting Officer.

## 1.10 DISPLAY OF SAFETY INFORMATION

Within 1 calendar day after commencement of work, erect a safety bulletin board at the job site. The safety bulletin board shall include information and be maintained as required by EM 385-1-1, section 01.A.06.

## 1.11 SITE SAFETY REFERENCE MATERIALS

Maintain safety-related references applicable to the project. Maintain applicable equipment manufacturer's manuals.

## 1.12 EMERGENCY MEDICAL TREATMENT

Contractors will arrange for their own emergency medical treatment. The Government has no responsibility to provide emergency medical treatment. Military medical clinics may provide emergency treatment for serious injuries; the contractor is responsible for coordination with the local military medical clinic prior to mobilization.

## 1.13 REPORTS

### 1.13.1 Accident Reports

For recordable injuries and illnesses, and property damage accidents resulting in at least $2,000 in damages, the Prime Contractor shall conduct an accident investigation to establish the root cause(s) of the accident, complete the USACE Accident Report Form 3394 and provide the report to the Contracting Officer within 5 calendar day(s) of the accident. The Contracting Officer will provide copies of any required or special forms.

### 1.13.2 Accident Notification

Notify the Contracting Officer as soon as practical, but not later than four hours, after any accident meeting the definition of Recordable Injuries or Illnesses or High Visibility Accidents, property damage equal to or greater than $2,000. Information shall include contractor name; contract title; type of contract; name of activity, installation or location where accident occurred; date and time of accident;

names of personnel injured; extent of property damage, if any; extent of injury, if known, and brief description of accident (to include type of construction equipment used, PPE used, etc.). Preserve the conditions and evidence on the accident site until the Government investigation team arrives on-site and Government investigation is conducted.

1.13.3 Monthly Exposure Reports

Monthly exposure reporting to the Contracting Officer is required to be attached to the monthly billing request. This report is a compilation of employee-hours worked each month for all site workers, both prime and subcontractor. The Contracting Officer will provide copies of any special forms.

1.13.4 Crane Reports

Submit crane inspection reports required in accordance with USACE EM 385-1-1, Appendix H and as specified herein with Daily Reports of Inspections.

## 1.14 HOT WORK

Prior to performing "Hot Work" (welding, cutting, etc.) or operating other flame-producing/spark producing devices, a written permit shall be requested from the Installation. CONTRACTORS ARE REQUIRED TO MEET ALL CRITERIA BEFORE A PERMIT IS ISSUED. The Contractor will provide at least two (2) six kilogram ABC rated extinguishers for normal "Hot Work". All extinguishers shall be current inspection tagged, approved safety pin and tamper resistant seal. It is also mandatory to have a designated FIRE WATCH for any "Hot Work" done at this activity. The Fire Watch shall be trained in fire fighting techniques and remain on-site for a minimum of 120 minutes after completion of the task or as specified on the hot work permit.

When starting work in the facility, Contractors shall require their personnel to familiarize themselves with the location of the nearest fire alarm boxes and place in memory the emergency phone numbers. ANY FIRE, NO MATTER HOW SMALL, SHALL BE REPORTED TO THE RESPONSIBLE FIRE DIVISION/DEPARTMENT IMMEDIATELY.

# PART 2 PRODUCTS

Not used.

# PART 3 EXECUTION

## 3.1 CONSTRUCTION AND/OR OTHER WORK

Before initiation of work at the job site, an accident prevention plan, written by the Contractor for the specific work and hazards of the contract and implementing in detail the pertinent requirements of EM 385-1-1, will be reviewed and found acceptable by designated Government personnel. Specific requirements for development of the accident prevention plan are found in sections 01.A and Appendix A of EM 385-1-1.

Before beginning each activity involving a type of work presenting hazards not experienced in previous project operations or where a new work crew or subcontractor is to perform the work, activity hazard analysis (AHA) shall be prepared by the Contractor performing the work activity. See paragraph 01.A.09 of EM 385-1-1.

The Contractor shall require subcontractors to submit their plan of operations showing methods they propose to use in accomplishing major phases of work.

The Contractor shall be prepared to discuss the plans in conferences convened by the Contracting Officer prior to starting work on each major phase of operation. Plans shall include all pertinent information such as layout of haul roads, access roads, storage areas, electrical distribution lines, methods of providing minimum exposure to overhead loads, and methods of access to work areas. The plan for accomplishing the initial work phase shall be submitted within 15 calendar days after award of the contract. Plans for subsequent major phases of work shall be submitted not later than 15 calendar days prior to initiation of work on each major phase.

All areas where construction, demolition, alteration, building, or similarly related activities take place, all workers shall have the following minimum personal protective clothing and equipment:

1. Short sleeve shirt.
2. Long trousers.
3. Steel-toed safety boots.
4. Hard hat.

3.1.1 Falling Object Protection

All areas must be barricaded to safeguard employees. When working overhead, barricade the area below to prevent entry by unauthorized employees. Construction warning tape and signs shall be posted so they are clearly visible from all possible access points. When employees are working overhead all tools and equipment shall be secured so that they will not fall. When using guardrail as falling object protection, all openings shall be small enough to prevent passage of potential falling objects.

3.1.2 Hazardous Material Use

Each hazardous material must receive approval prior to being brought onto the job site or prior to any other use in connection with this contract. Allow a minimum of 10 working days for processing of the request for use of a hazardous material. Any work or storage involving hazardous chemicals or materials must be done in a manner that will not expose Government or Contractor employees to any unsafe or unhealthful conditions. Adequate protective measures must be taken to prevent Government or Contractor employees from being exposed to any hazardous condition that could result from the work or storage. The Prime Contractor shall keep a complete inventory of hazardous materials brought onto the work-site. Approval by the Contracting Officer of protective measures and storage area is required prior to the start of the work.

3.1.3 Hazardous Material Exclusions

Notwithstanding any other hazardous material used in this contract, radioactive materials or instruments capable of producing ionizing/non-ionizing radiation (with the exception of radioactive material and devices used in accordance with USACE EM 385-1-1 such as nuclear density meters for compaction testing and laboratory equipment with radioactive sources) as well as materials which contain asbestos, mercury or polychlorinated biphenyls, di-isocynates, lead-based paint are prohibited. The Contracting Officer, upon written request by the Contractor, may consider exceptions to the use of any of the above excluded materials.

3.1.4 Unforeseen Hazardous Material

The design should have identified materials such as PCB, lead paint, and friable and non-friable asbestos. If material, not indicated, that may be hazardous to human health upon disturbance during construction operations is encountered, stop that portion of work and notify the Contracting Officer immediately. Within 14 calendar days the Government will determine if the material is hazardous. If material is not hazardous or poses no danger, the Government will direct the Contractor to proceed without change. If material is hazardous and handling of the material is necessary to accomplish the

work, the Government will issue a modification pursuant to "FAR 52.243-4, Changes" and "FAR 52.236-2, Differing Site Conditions."

## 3.2 FALL HAZARD PROTECTION AND PREVENTION PROGRAM

The Contractor shall establish a fall protection and prevention program, for the protection of all employees exposed to fall hazards. The program shall include company policy, identify responsibilities, education and training requirements, fall hazard identification, prevention and control measures, inspection, storage, care and maintenance of fall protection equipment and rescue and evacuation procedures.

### 3.2.1 Training

The Contractor shall institute a fall protection training program. As part of the Fall Hazard Protection and Prevention Program, the Contractor shall provide training for each employee who might be exposed to fall hazards. A competent person for fall protection shall provide the training. Training requirements shall be in accordance with USACE EM 385-1-1, section 21.A.16.

### 3.2.2 Fall Protection Equipment and Systems

The Contractor shall enforce use of the fall protection equipment and systems designated for each specific work activity in the Fall Protection and Prevention Plan and/or AHA at all times when an employee is exposed to a fall hazard. Employees shall be protected from fall hazards as specified in EM 385-1-1, section 21. In addition to the required fall protection systems, safety skiff, personal floatation devices, life rings etc., are required when working above or next to water in accordance with USACE EM 385-1-1, paragraphs 05.H. and 05.I. Personal fall arrest systems are required when working from an articulating or extendible boom, swing stages, or suspended platform. In addition, personal fall arrest systems are required when operating other equipment such as scissor lifts if the work platform is capable of being positioned outside the wheelbase. The need for tying-off in such equipment is to prevent ejection of the employee from the equipment during raising, lowering, or travel. Fall protection must comply with USACE EM 385-1-1 and host nation requirements, whichever is more stringent.

#### 3.2.2.1 Personal Fall Arrest Equipment

Personal fall arrest equipment, systems, subsystems, and components shall meet ANSI Z359.1 or European Union equivalent. Only a full-body harness with a shock-absorbing lanyard or self-retracting lanyard is an acceptable personal fall arrest body support device. Body belts may only be used as a positioning device system (for uses such as steel reinforcing assembly and in addition to an approved fall arrest system). Harnesses shall have a fall arrest attachment affixed to the body support (usually a Dorsal D-ring) and specifically designated for attachment to the rest of the system. Only locking snap hooks and carabiners shall be used. Webbing, straps, and ropes shall be made of synthetic fiber. The maximum free fall distance when using fall arrest equipment shall not exceed 1.8 m (6 feet). The total fall distance and any swinging of the worker (pendulum-like motion) that can occur during a fall shall always be taken into consideration when attaching a person to a fall arrest system.

### 3.2.3 Fall Protection for Roofing Work

Fall protection controls shall be implemented based on the type of roof being constructed and work being performed. The roof area to be accessed shall be evaluated for its structural integrity including weight-bearing capabilities for the projected loading.

a. Low Sloped Roofs:

(1) For work within 1.8 m (6 feet) of an edge, on low-slope roofs, personnel shall be protected from falling by use of personal fall arrest systems, guardrails, or safety nets. A safety monitoring system is not adequate fall protection and is not authorized.

(2) For work greater than 1.8 m (6 feet) from an edge, warning lines shall be erected and installed in accordance with USACE EM 385-1-1.

b. Steep-Sloped Roofs: Work on steep-sloped roofs requires a personal fall arrest system, guardrails with toe-boards, or safety nets. This requirement also includes residential or housing type construction.

3.2.4 Existing Anchorage

Existing anchorages, to be used for attachment of personal fall arrest equipment, shall be certified (or re-certified) by a qualified person for fall protection in accordance with ANSI Z359.1 or European Union equivalent. Exiting horizontal lifeline anchorages shall be certified (or re-certified) by a registered professional engineer with experience in designing horizontal lifeline systems.

3.2.5 Horizontal Lifelines

Horizontal lifelines shall be designed, installed, certified and used under the supervision of a qualified person for fall protection as part of a complete fall arrest system which maintains a safety factor of 2.

3.2.6 Guardrails and Safety Nets

Guardrails and safety nets shall be designed, installed and used in accordance with EM 385-1-1 or Host Nation requirements, whichever is more stringent.

3.2.7 Rescue and Evacuation Procedures

When personal fall arrest systems are used, the contractor must ensure that the mishap victim can self-rescue or can be rescued promptly should a fall occur. A Rescue and Evacuation Plan shall be prepared by the contractor and include a detailed discussion of the following: methods of rescue; methods of self-rescue; equipment used; training requirement; specialized training for the rescuers; procedures for requesting rescue and medical assistance; and transportation routes to a medical facility. The Rescue and Evacuation Plan shall be included in the Activity Hazard Analysis (AHA) for the phase of work, in the Fall Protection and Prevention (FP&P) Plan, and the Accident Prevention Plan (APP).

## 3.3 SCAFFOLDING

Employees shall be provided with a safe means of access to the work area on the scaffold. Climbing of any scaffold braces or supports not specifically designed for access is prohibited. Access to scaffold platforms greater than 6 m in height shall be accessed by use of a scaffold stair system. Vertical ladders commonly provided by scaffold system manufacturers shall not be used for accessing scaffold platforms greater than 6 m in height. The use of an adequate gate is required. Contractor shall ensure that employees are qualified to perform scaffold erection and dismantling. Do not use scaffold without the capability of supporting at least four times the maximum intended load or without appropriate fall protection as delineated in the accepted fall protection and prevention plan. Stationary scaffolds must be attached to structural building components to safeguard against tipping forward or backward. Special care shall be given to ensure scaffold systems are not overloaded. Side brackets used to extend scaffold platforms on self-supported scaffold systems for the storage of material is prohibited. The first tie-in shall be at the height equal to 4 times the width of the smallest dimension of the scaffold base. Work platforms shall be placed on mud sills. Scaffold or work

platform erectors shall have fall protection during the erection and dismantling of scaffolding or work platforms that are more than six feet. Delineate fall protection requirements when working above six feet or above dangerous operations in the Fall Protection and Prevention (FP&P) Plan and Activity Hazard Analysis (AHA) for the phase of work.

## 3.4 EQUIPMENT

### 3.4.1 Material Handling Equipment

a. Material handling equipment such as forklifts shall not be modified with work platform attachments for supporting employees unless specifically delineated in the manufacturer's printed operating instructions.

b. The use of hooks on equipment for lifting of material must be in accordance with manufacturer's printed instructions.

c. Operators of forklifts or power industrial trucks shall be trained/licensed in accordance with Host Nation requirements.

### 3.4.2 Weight Handling Equipment

a. Cranes and derricks shall be equipped as specified in EM-385-1-1 section 16.

b. The Contractor shall notify the Contracting Officer 15 days in advance of any cranes entering the activity so that necessary quality assurance spot checks can be coordinated. Contractor's operator shall remain with the crane during the spot check.

c. The Contractor shall comply with the crane manufacturer's specifications and limitations for erection and operation of cranes and hoists used in support of the work. Erection shall be performed under the supervision of a designated person. All testing shall be performed in accordance with the manufacturer's recommended procedures.

d. Under no circumstance shall a Contractor make a lift at or above 90% of the cranes rated capacity in any configuration.

e. When operating in the vicinity of overhead transmission lines, operators and riggers shall be alert to this special hazard and shall follow the requirements of USACE EM 385-1-1 section 11.

f. Crane suspended personnel work platforms (baskets) shall not be used unless the Contractor proves to the satisfaction of the Contracting Officer that using any other access to the work location would provide a greater hazard to the workers or is impossible. Personnel shall not be lifted with a line hoist or friction crane.

g. Portable fire extinguishers shall be inspected, maintained, and recharged.

h. All employees shall be kept clear of loads about to be lifted and of suspended loads.

i. The Contractor shall use cribbing when performing lifts on outriggers.

j. The crane hook/block must be positioned directly over the load. Side loading of the crane is prohibited.

k. A physical barricade must be positioned to prevent personnel from entering the counterweight swing (tail swing) area of the crane.

l. Certification records which include the date of inspection, signature of the person performing the inspection, and the serial number or other identifier of the crane that was inspected shall always be available for review by Contracting Officer personnel.

m. Written reports listing the load test procedures used along with any repairs or alterations performed on the crane shall be available for review by Contracting Officer personnel.

n. Certify that all crane operators have been trained in proper use of all safety devices (e.g. anti-two block devices).

o. Take steps to ensure that wind speed does not contribute to loss of control of the load during lifting operations. Prior to conducting lifting operations the contractor shall set a maximum wind speed at which a crane can be safely operated based on the equipment being used, the load being lifted, experience of operators and riggers, and hazards on the work site. This maximum wind speed determination shall be included as part of the activity hazard analysis plan for that operation.

## 3.5 EXCAVATIONS

The competent person for excavations performed as a result of contract work shall be on-site when excavation work is being performed, and shall inspect, and document the excavations daily prior to entry by workers. The competent person must evaluate all hazards, including atmospheric, that may be associated with the work, and shall have the resources necessary to correct hazards promptly.

### 3.5.1 Utility Locations

Prior to any excavation, all underground utilities in the work area must be positively identified by the contractor utilizing a) a private utility locating service in addition to any station locating service, and/or b) a metal and/or cable-detecting device along the route of the excavation. All underground utilities discovered will be flagged a distance of one-half (1/2) meter on each side of the location, and any markings made during the utility investigation must be maintained throughout the contract.

Damage occurring to existing utilities, when the above procedures are not followed, will be repaired at the Contractor’s expense.

### 3.5.2 Utility Location Verification

The Contractor must physically verify underground utility locations by hand digging using wood or fiberglass handled tools when any adjacent construction work is expected to come within three feet of the underground system. Digging within 0.61 m (2 feet) of a known utility must not be performed by means of mechanical equipment; hand digging shall be used. If construction is parallel to an existing utility the utility shall be exposed by hand digging every 30.5 m (100 feet) if parallel within 1.5 m (5 feet) of the excavation.

### 3.5.3 Shoring Systems

Trench and shoring systems must be identified in the accepted safety plan and AHA. Manufacture tabulated data and specifications or registered engineer tabulated data for shoring or benching systems shall be readily available on-site for review. Job-made shoring or shielding shall have the registered professional engineer stamp, specifications, and tabulated data. Extreme care must be used when excavating near direct burial electric underground cables.

3.5.4 Trenching Machinery

Trenching machines with digging chain drives shall be operated only when the spotters/laborers are in plain view of the operator. Operator and spotters/laborers shall be provided training on the hazards of the digging chain drives with emphasis on the distance that needs to be maintained when the digging chain is operating. Documentation of the training shall be kept on file at the project site.

## 3.6 UTILITIES WITHIN CONCRETE SLABS

Utilities located within concrete slabs or pier structures, bridges, and the like, are extremely difficult to identify due to the reinforcing steel used in the construction of these structures. Whenever contract work involves concrete chipping, saw cutting, or core drilling, the existing utility location must be coordinated with station utility departments in addition to a private locating service. Outages to isolate utility systems shall be used in circumstances where utilities are unable to be positively identified. The use of historical drawings does not alleviate the contractor from meeting this requirement.

## 3.7 ELECTRICAL

3.7.1 Conduct of Electrical Work

Underground electrical spaces must be certified safe for entry before entering to conduct work. Cables that will be cut must be positively identified and de-energized prior to performing each cut. Positive cable identification must be made prior to submitting any outage request for electrical systems. Arrangements are to be coordinated with the Contracting Officer and Station Utilities for identification. The Contracting Officer will not accept an outage request until the Contractor satisfactorily documents that the circuits have been clearly identified. Perform all high voltage cable cutting remotely using hydraulic cutting tool. When racking in or live switching of circuit breakers, no additional person other than the switch operator will be allowed in the space during the actual operation. Plan so that work near energized parts is minimized to the fullest extent possible. Use of electrical outages clear of any energized electrical sources is the preferred method. When working in energized substations, only qualified electrical workers shall be permitted to enter. When work requires Contractor to work near energized circuits as defined by the NFPA 70, high voltage personnel must use personal protective equipment that includes, as a minimum, electrical hard hat, safety shoes, insulating gloves with leather protective sleeves, fire retarding shirts, coveralls, face shields, and safety glasses. In addition, provide electrical arc flash protection for personnel as required by NFPA 70E. Insulating blankets, hearing protection, and switching suits may also be required, depending on the specific job and as delineated in the Contractor's AHA.

3.7.2 Portable Extension Cords

Portable extension cords shall be sized in accordance with manufacturer ratings for the tool to be powered and protected from damage. All damaged extension cords shall be immediately removed from service. Portable extension cords shall meet the requirements of NFPA 70 or European Union equivalent.

## 3.8 WORK IN CONFINED SPACES

The Contractor shall comply with the requirements in Section 06.I of USACE EM 385-1-1. Any potential for a hazard in the confined space requires a permit system to be used.

a. Entry Procedures. Prohibit entry into a confined space by personnel for any purpose, including hot work, until the qualified person has conducted appropriate tests to ensure the confined or enclosed space is safe for the work intended and that all potential hazards are controlled or eliminated and

documented. (See Section 06.I.06 of USACE EM 385-1-1 for entry procedures). All hazards pertaining to the space shall be reviewed with each employee during review of the AHA.

b. Forced air ventilation is required for all confined space entry operations and the minimum air exchange requirements must be maintained to ensure exposure to any hazardous atmosphere is kept below its' action level.

c. Ensure the use of rescue and retrieval devices in confined spaces greater than 1.5 m (5 feet) in depth. Conform to Sections 06.I.08, 06.I.09 and 06.I.10 of USACE EM 385-1-1.

d. Sewer wet wells require continuous atmosphere monitoring with audible alarm for toxic gas detection.

e. Include training information for employees who will be involved as entrants and attendants for the work. Conform to Section 06.I.07 of USACE EM 385-1-1.

f. Daily Entry Permit. Post the permit in a conspicuous place close to the confined space entrance.

## 3.9 CRYSTALLINE SILICA

Grinding, abrasive blasting, and foundry operations of construction materials containing crystalline silica, shall comply with USACE EM 385-1-1, Appendix C. The Contractor shall develop and implement effective exposure control and elimination procedures to include dust control systems, engineering controls, and establishment of work area boundaries, as well as medical surveillance, training, air monitoring, and personal protective equipment.

## 3.10 DEMOLITION

3.101.1 Demolition Plan

The Contractor shall submit a written demolition plan for all demolition work to be carried on the site. In addition, the demolition plan shall be signed by a Professional Registered Engineer and meet the requirements of the Corps of Engineers Safety and Health Manual, EM 385-1-1, section 23. The demolition plan shall be submitted to the COR at least 1 week before the beginning of the work, including structural calculations for the demolition, if necessary. The demolition work shall not begin before the Contractor has received a written approval from the COR.

3.12.1 Protection of Personnel

During the demolition work the Contractor shall continuously evaluate the condition of the structure being demolished and take immediate action to protect all personnel working in and around the demolition site. No area, section, or component of floors, roofs, walls, columns, pilasters, or other structural element will be allowed to be left standing without sufficient bracing, shoring, or lateral support to prevent collapse or failure while workers remove debris or perform other work in the immediate area.

3.10.1 Protection of Structures

Floors, roofs, walls, columns, pilasters, and other structural components that are designed and constructed to stand without lateral support or shoring, and are determined to be in stable condition, shall remain standing without additional bracing, shoring, or lateral support until demolished, unless directed otherwise by the COR. The Contractor shall ensure that no elements determined to be unstable are left unsupported and shall be responsible for placing and securing bracing, shoring, or

lateral supports as may be required as a result of any cutting, removal, or demolition work performed under this contract.

Interior concrete or masonry walls shall be demolished from the top down unless a Registered Engineer can demonstrate that an alternate method poses no additional safety hazards

## 3.11 HOUSEKEEPING

### 3.11.1 Clean-Up

The Contractor shall be responsible for cleaning up. The Contractor shall require his personnel to keep the immediate work site clean of all dirt and debris resulting from work under this contract. Accumulated dirt and debris shall be hauled off and disposed of in accordance with local law and at least once a week by the Contractor. Additionally, all debris in work areas shall be cleaned up daily or more frequently if necessary. Construction debris may be temporarily located in an approved location, however garbage accumulation must be removed each day.

Stairwells used by the Contractor during execution of work shall be cleaned daily. Cloths, mops, and brushes containing combustible materials shall be disposed of or stored outside of the buildings in tight covered metal containers. Paints and thinners shall not be poured into inlets of the interior or exterior sewage system. Paint, stains, and other residues on adjacent surfaces or fixtures caused by the Contractor shall be carefully removed and cleaned to original finish. Upon completion of the work, the Contractor shall remove all construction equipment, materials and debris resulting from the work. The entire work site and the area used by Contractor personnel shall be left clean.

--- END OF SECTION --

SECTION 01770

# SPECIFICATION SECTION 01770

# CLOSEOUT PROCEDURES

## PART 1: GENERAL

### 1.1 SUBMITTALS

Government approval is required for submittals with a "G" designation; submittals not having a "G" designation are for information only. When used, a designation following the "G" designation identifies the office that will review the submittal for the Government. The following shall be submitted in accordance with Section 01335 SUBMITTAL PROCEDURES:

SD-10 Operation and Maintenance Data
Equipment/Product Warranty List; G
Submit Data Package 1 in accordance with Section 01781 OPERATION AND MAINTENANCE DATA.

SD-11 Closeout Submittals
As-Built Drawings; G
Record Of Materials; G
Equipment/Product Warranty Tag; G

### 1.2 PROJECT RECORD DOCUMENTS

1.2.1 As-Built Drawings

As built drawings shall be submitted in accordance with Section 01780A CLOSEOUT SUBMITTALS

1.2.2 As-Built Record of Materials

Furnish a record of materials.

Where several manufacturers' brands, types, or classes of the item listed have been used in the project, designate specific areas where each item was used. Designations shall be keyed to the areas and spaces depicted on the contract drawing. Furnish the record of materials used in the following format:

| MATERIALS DESIGNATION | SPECIFICATION | MANUFACTURER | MATERIALS USED (MANUFACTURER'S DESIGNATION) | WHERE USED |
|---|---|---|---|---|
| | | | | |

### 1.3 EQUIPMENT/PRODUCT WARRANTIES

1.3.1 Equipment/Product Warranty List

The Contractor shall develop a warranty management plan which shall contain information relevant to the clause Warranty of Construction. At least 30 days before the planned pre-warranty conference, the Contractor shall submit the warranty management plan for Government approval. The warranty management plan shall include all required actions and documents to assure that the Government receives all warranties to which it is entitled. The plan shall be in narrative form and contain sufficient detail to render it suitable for use by future maintenance and repair personnel, whether tradesmen, or of engineering background, not necessarily familiar with this contract. The term "status" as indicated below shall include due date and whether item has been submitted or was accomplished. Warranty information made available during the construction phase shall be submitted to the Contracting Officer for approval prior to each monthly pay estimate. Approved information shall be assembled in a binder and shall be turned over to the Government upon acceptance of the work. The construction warranty period shall begin on the date of project acceptance and shall continue for the full product warranty period. A joint 4 month and 9 month warranty inspection shall be conducted, measured from time of acceptance, by the Contractor, Contracting Officer and the Customer Representative. Information contained in the warranty management plan shall include, but shall not be limited to, the following:

a. Roles and responsibilities of all personnel associated with the warranty process, including points of contact and telephone numbers within the organizations of the Contractors, subcontractors, manufacturers or suppliers involved.

b. Listing and status of delivery of all Certificates of Warranty for extended warranty items, to include roofs, HVAC balancing, pumps, motors, transformers, and for all commissioned systems such as fire protection and alarm systems, sprinkler systems, lightning protection systems, etc.

c. A list for each warranted equipment, item, feature of construction or system indicating:

1. Name of item.
2. Model and serial numbers.
3. Location where installed.
4. Name and phone numbers of manufacturers or suppliers.
5. Names, addresses and telephone numbers of sources of spare parts.
6. Warranties and terms of warranty. This shall include one-year overall warranty of construction. Items which have extended warranties shall be indicated with separate warranty expiration dates.
7. Cross-reference to warranty certificates as applicable.
8. Starting point and duration of warranty period.
9. Summary of maintenance procedures required to continue the warranty in force.
10. Cross-reference to specific pertinent Operation and Maintenance manuals.
11. Organization, names and phone numbers of persons to call for warranty service.
12. Typical response time and repair time expected for various warranted equipment.

d. The Contractor's plans for attendance at the 4 and 9 month post-construction warranty inspections conducted by the Government.

e. Procedure and status of tagging of all equipment covered by extended warranties.

f. Copies of instructions to be posted near selected pieces of equipment where operation is critical for warranty and/or safety reasons.

1.3.2 Performance of Warranty Work

In the event the Contractor fails to commence and diligently pursue any construction warranty work required, the Contracting Officer will have the work performed by others, and after completion of the work, will charge the remaining construction warranty funds of expenses incurred by the Government while performing the work, including, but not limited to administrative expenses.

Following oral or written notification of required construction warranty repair work, the Contractor shall respond in a timely manner. Written verification will follow oral instructions. Failure of the Contractor to respond will be cause for the Contracting Officer to proceed against the Contractor.

1.3.3 Pre-Warranty Conference

Prior to contract completion, and at a time designated by the Contracting Officer, the Contractor shall meet with the Contracting Officer to develop a mutual understanding with respect to the requirements of this section. Communication procedures for Contractor notification of construction warranty defects, priorities with respect to the type of defect, reasonable time required for Contractor response, and other details deemed necessary by the Contracting Officer for the execution of the construction warranty shall be established/reviewed at this meeting. In connection with these requirements and at the time of the Contractor's quality control completion inspection, the Contractor shall furnish the name, telephone number and address of a licensed and bonded company which is authorized to initiate and pursue construction warranty work action on behalf of the Contractor. This point of contact will be located within the local service area of the warranted construction, shall be continuously available, and shall be responsive to Government inquiry on warranty work action and status. This requirement does not relieve the Contractor of any of its responsibilities in connection with other portions of this provision.

1.3.4 Warranty Tags

At the time of installation, each warranted item shall be tagged with a durable, oil and water resistant tag approved by the Contracting Officer. Each tag shall be attached with a copper wire and shall be sprayed with a silicone waterproof coating. The date of acceptance and the QC signature shall remain blank until project is accepted for beneficial occupancy. The tag shall show the following information.

a. Type of product/material _____
b. Model number _____
c. Serial number_____
d. Contract number _____
e. Warranty period _____ from _____ to _____
f. Inspector's signature _____
g. Construction Contractor _____
Address _____
Telephone number_____
h. Warranty contact _____
Address _____
Telephone number_____
i. Warranty response time priority code _____
j. WARNING - PROJECT PERSONNEL TO PERFORM ONLY OPERATIONAL MAINTENANCE DURING THE WARRANTY PERIOD.

## 1.4 MECHANICAL TESTING AND BALANCING

All contract requirements for testing/adjusting/balancing shall be fully completed, including all testing, prior to contract completion date. The time required to complete all testing/adjusting/balancing is included in the allotted calendar days for completion.

## 1.5 FINAL CLEANING

The premises shall be left broom clean. Stains, foreign substances, and temporary labels shall be removed from surfaces. Carpet and soft surfaces shall be vacuumed. Equipment and fixtures shall be cleaned to a sanitary condition. Filters of operating equipment shall be replaced. Debris shall be removed from roofs, drainage systems, gutters, and downspouts. Paved areas shall be swept and

landscaped areas shall be raked clean. The site shall have waste, surplus materials, and rubbish removed. The project area shall have temporary structures, barricades, project signs, and construction facilities removed. A list of completed clean-up items shall be submitted on the day of final inspection.

**PART 2 PRODUCTS**

Not used.

**PART 3 EXECUTION**

Not used.

-- End of Section --

# SECTION 01780A

# CLOSEOUT SUBMITTALS

## PART 1 GENERAL

### 1.1 SUBMITTALS

Government approval is required for submittals with a "G" designation; submittals not having a "G" designation are for Contractor Quality Control approval. When used, a designation following the "G" designation identifies the office that will review the submittal for the Government. The following shall be submitted in accordance with Section 01335 SUBMITTAL PROCEDURES:

SD-02 Shop Drawings

As-Built Drawings

Drawings showing final as-built conditions of the project. The local language of Afghanistan shall be added to project As-Built drawings. The final CADD as-built drawings shall consist of **2 sets** of electronic CADD drawing files in the specified format, and **2 half-size and 1 full-size paper copy** of the approved as-built drawings.

SD-03 Product Data

As-Built Record of Equipment and Materials

Two copies of the record listing the as-built materials and equipment incorporated into the construction of the project.

Warranty Management Plan

One set of the warranty management plan containing information relevant to the warranty of materials and equipment incorporated into the construction project, including the starting date of warranty of construction. The Contractor shall furnish with each warranty the name, address, and telephone number of each of the guarantor's representatives nearest to the project location.

Warranty Tags

Two record copies of the warranty tags showing the layout and design.

Final Cleaning

Two copies of the listing of completed final clean-up items.

## 1.2 PROJECT RECORD DOCUMENTS

1.2.1 As-Built Drawings

This paragraph covers as-built drawings complete, as a requirement of the contract. The terms "drawings," "contract drawings," "drawing files," "working as-built drawings" and "final as-built drawings" refer to contract drawings which are revised to be used for final as-built drawings.

1.2.1.1 Government Furnished Materials

One set of electronic CADD files in the specified software and format revised to reflect all bid amendments will be provided by the Government at the preconstruction conference for projects requiring CADD file as-built drawings.

1.2.1.2 Working As-Built and Final As-Built Drawings

a. The Contractor shall revise 2 sets of paper drawings by red-line process to show the as-built conditions during the prosecution of the project. These working as-built marked drawings shall be kept current on a weekly basis and at least one set shall be available on the jobsite at all times. Changes from the contract plans which are made in the work or additional information which might be uncovered in the course of construction shall be accurately and neatly recorded as they occur by means of details and notes. Final as-built drawings shall be prepared after the completion of each definable feature of work as listed in the Contractor Quality Control Plan (Foundations, Utilities, Structural Steel, etc., as appropriate for the project). The working as-built marked prints and final as-built drawings will be jointly reviewed for accuracy and completeness by the Contracting Officer and the Contractor prior to submission of each monthly pay estimate. If the Contractor fails to maintain the working and final as-built drawings as specified herein, the Contracting Officer will deduct from the monthly progress payment an amount representing the estimated cost of maintaining the as-built drawings. This monthly deduction will continue until an agreement can be reached between the Contracting Officer and the Contractor regarding the accuracy and completeness of updated drawings. The working and final as-built drawings shall show, but shall not be limited to, the following information:

b. The actual location, kinds and sizes of all sub-surface utility lines. In order that the location of these lines and appurtenances may be determined in the event the surface openings or indicators become covered over or obscured, the as-built drawings shall show, by offset dimensions to two permanently fixed surface features, the end of each run including each change in direction. Valves, splice boxes and similar appurtenances shall be located by dimensioning along the utility run from a reference point. The average depth below the surface of each run shall also be recorded.

c. The location and dimensions of any changes within the building structure.

d. Correct grade, elevations, cross section, or alignment of roads, earthwork, structures or

utilities if any changes were made from contract plans.

e. Changes in details of design or additional information obtained from working drawings specified to be prepared and/or furnished by the Contractor; including but not limited to fabrication, erection, installation plans and placing details, pipe sizes, insulation material, dimensions of equipment foundations, etc.

f. The topography, invert elevations and grades of drainage installed or affected as part of the project construction.

g. Changes or modifications which result from the final inspection.

h. Where contract drawings or specifications present options, only the option selected for construction shall be shown on the final as-built prints.

i. If borrow material for this project is from sources on Government property, or if Government property is used as a spoil area, the Contractor shall furnish a contour map of the final borrow pit/spoil area elevations.

j. Systems designed or enhanced by the Contractor, such as HVAC controls, fire alarm, fire sprinkler, and irrigation systems.

k. Modifications (change order price shall include the Contractor's cost to change working and final as-built drawings to reflect modifications) and compliance with the following procedures.

(1) Directions in the modification for posting descriptive changes shall be followed.

(2) A Modification Circle shall be placed at the location of each deletion.

(3) For new details or sections which are added to a drawing, a Modification Circle shall be placed by the detail or section title.

(4) For minor changes, a Modification Circle shall be placed by the area changed on the drawing (each location).

(5) For major changes to a drawing, a Modification Circle shall be placed by the title of the affected plan, section, or detail at each location.

(6) For changes to schedules or drawings, a Modification Circle shall be placed either by the schedule heading or by the change in the schedule.

(7) The Modification Circle size shall be 12.7 mm 1/2 inch diameter unless the area where the circle is to be placed is crowded. Smaller size circle shall be used for crowded areas.

1.2.1.3 Drawing Preparation

The as-built drawings shall be modified as may be necessary to correctly show the features of the project as it has been constructed by bringing the contract set into agreement with approved working as-built prints, and adding such additional drawings as may be necessary. These working as-built marked prints shall be neat, legible and accurate. These drawings are part of the permanent records of this project and shall be returned to the Contracting Officer after approval by the Government. Any drawings damaged or lost by the Contractor shall be satisfactorily replaced by the Contractor at no expense to the Government.

1.2.1.4 Computer Aided Design and Drafting (CADD) Drawings

a. Only personnel proficient in the preparation of CADD drawings shall be employed to modify the contract drawings or prepare additional new drawings. Additions and corrections to the contract drawings shall be equal in quality and detail to that of the originals. Line colors, line weights, lettering, layering conventions, and symbols shall be the same as the original line colors, line weights, lettering, layering conventions, and symbols. If additional drawings are required, they shall be prepared using the specified electronic file format applying the same graphic standards specified for original drawings. The title block and drawing border to be used for any new final as-built drawings shall be identical to that used on the contract drawings. Additions and corrections to the contract drawings shall be accomplished using CADD files. The Contractor will be furnished "as-designed" drawings in AutoCAD Release 2007 or Microstation V8 format compatible with a Windows XP operating system. The electronic files will be supplied on compact disc, read-only memory (CD-ROM). The Contractor shall be responsible for providing all program files and hardware necessary to prepare final as-built drawings.

b. Prior to submittal of the first design submittal involving CADD drawings, the Contractor shall prepare one typical CADD drawing for the project and furnish, via ENG Form 4025, the electronic CADD drawing file for review and approval by the Contracting Officer. All Government comments involving changes to this single drawing shall be accomplished and resubmittal(s) made until the Government is satisfied that all CADD Standards are being followed and all subsequent drawings will also be in compliance with these Standards.

c. CADD colors shall be the "base" colors of red, green, and blue. Color code for changes shall be as follows:

(1) Deletions (red) - Deleted graphic items (lines) shall be colored red with red lettering in notes and leaders.

(2) Additions (Green) - Added items shall be drawn in green with green lettering in notes and leaders.

(3) Special (Blue) - Items requiring special information, coordination, or special detailing or detailing notes shall be in blue.

d. The Contract Drawing files shall be renamed in a manner related to the contract number (i.e., 98-C-10.DGN) as instructed in the Pre-Construction conference. Marked-up changes shall be made only to those renamed files. All changes shall be made on the layer/level as the original

item. There shall be no deletions of existing lines; existing lines shall be over struck in red. Additions shall be in green with line weights the same as the drawing. Special notes shall be in blue on layer#63.

e. When final revisions have been completed, the cover sheet drawing shall show the wording "RECORD DRAWING AS-BUILT" followed by the name of the Contractor in letters at least 5 mm 3/16 inch high. All other contract drawings shall be marked either "As-Built" drawing denoting no revisions on the sheet or "Revised As-Built" denoting one or more revisions. Original contract drawings shall be dated in the revision block.

f. After Government approval of all of the working as-built drawings for a phase of work, the Contractor shall prepare the final CADD as-built drawings for that phase of work and submit two sets of full size paper copy prints of these drawings for Government review, comparison with approved red-line marked up drawings, and approval. The Government will promptly return one set of prints annotated with any necessary corrections to the CADD file(s) if corrections are required prior to approval. Within 20 days of substantial completion of all phases of work, the Contractor shall submit the final as-built drawing package for the entire project. The submittal shall consist of one set of electronic files on compact disc, read-only memory (CD-ROM), one set of full size paper prints and one set of the approved working as-built drawings. They shall be complete in all details and identical in form and function to the contract drawing files supplied by the Government. Any transactions or adjustments necessary to accomplish this is the responsibility of the Contractor. The Government reserves the right to reject any drawing files it deems incompatible with the CADD system. Upon approval by the Government of the final as-built drawing package for the entire project, the Contractor shall provide the number of as-built copies noted in Paragraph 1.1 of this Section.

g. Paper prints, drawing files and storage media submitted will become the property of the Government upon final approval. Failure to submit final as-built drawing files and marked prints as specified shall be cause for withholding any payment due the Contractor under this contract. Approval and acceptance of final as-built drawings shall be accomplished before final payment is made to the Contractor.

1.2.1.5 Payment

No separate payment will be made for as-built drawings required under this contract, and all costs accrued in connection with such drawings shall be considered a subsidiary obligation of the Contractor.

1.2.2 As-Built Record of Equipment and Materials

The Contractor shall furnish one copy of preliminary record of equipment and materials used on the project 15 days prior to final inspection. This preliminary submittal will be reviewed and returned 2 days after final inspection with Government comments. Two sets of final record of equipment and materials shall be submitted 10 days after final inspection. The designations shall be keyed to the related area depicted on the contract drawings. The record shall list the following

data:

RECORD OF DESIGNATED EQUIPMENT AND MATERIALS DATA

| Description | Specification Section | Manufacturer and Catalog, Model, and Serial Number | Composition and Size | Where Used |
|---|---|---|---|---|

1.2.3 Final Approved Shop Drawings

The Contractor shall furnish final approved project shop drawings 30 days after transfer of the completed facility.

1.2.4 Construction Contract Specifications

The Contractor shall furnish final as-built construction contract specifications, including modifications thereto, 30 days after transfer of the completed facility.

1.2.5 Real Property Equipment

The Contractor shall furnish a list of installed equipment furnished under this contract. The list shall include all information usually listed on manufacturer's name plate. The "EQUIPMENT-IN-PLACE LIST" shall include, as applicable, the following for each piece of equipment installed: description of item, location (by room number), model number, serial number, capacity, name and address of manufacturer, name and address of equipment supplier, condition, spare parts list, manufacturer's catalog, and warranty. A draft list shall be furnished at time of transfer. The final list shall be furnished 30 days after transfer of the completed facility.

## 1.3 WARRANTY MANAGEMENT

1.3.1 Warranty Management Plan

The Contractor shall develop a warranty management plan which shall contain information relevant to the clause Warranty of Construction. At least 30 days before the planned pre-warranty conference, the Contractor shall submit the warranty management plan for Government approval. The warranty management plan shall include all required actions and documents to assure that the Government receives all warranties to which it is entitled. The plan shall be in narrative form and contain sufficient detail to render it suitable for use by future maintenance and repair personnel, whether tradesmen, or of engineering background, not necessarily familiar with this contract. The term "status" as indicated below shall include due date and whether item

has been submitted or was accomplished. Warranty information made available during the construction phase shall be submitted to the Contracting Officer for approval prior to each monthly pay estimate. Approved information shall be assembled in a binder and shall be turned over to the Government upon acceptance of the work. The construction warranty period shall begin on the date of project acceptance and shall continue for the full product warranty period. A joint 4 month and 9 month warranty inspection shall be conducted, measured from time of acceptance, by the Contractor, Contracting Officer and the Customer Representative. Information contained in the warranty management plan shall include, but shall not be limited to, the following:

a. Roles and responsibilities of all personnel associated with the warranty process, including points of contact and telephone numbers within the organizations of the Contractors, subcontractors, manufacturers or suppliers involved.

b. Listing and status of delivery of all Certificates of Warranty for extended warranty items, to include roofs, HVAC balancing, pumps, motors, transformers, and for all commissioned systems such as fire protection and alarm systems, sprinkler systems, lightning protection systems, etc.

c. A list for each warranted equipment, item, feature of construction or system indicating:

1. Name of item.
2. Model and serial numbers.
3. Location where installed.
4. Name and phone numbers of manufacturers or suppliers.
5. Names, addresses and telephone numbers of sources of spare parts.
6. Warranties and terms of warranty. This shall include one-year overall warranty of construction. Items which have extended warranties shall be indicated with separate warranty expiration dates.
7. Cross-reference to warranty certificates as applicable.
8. Starting point and duration of warranty period.
9. Summary of maintenance procedures required to continue the warranty in force.
10. Cross-reference to specific pertinent Operation and Maintenance manuals.
11. Organization, names and phone numbers of persons to call for warranty service.
12. Typical response time and repair time expected for various warranted equipment.

d. The Contractor's plans for attendance at the 4 and 9 month post-construction warranty inspections conducted by the Government.

e. Procedure and status of tagging of all equipment covered by extended warranties.

f. Copies of instructions to be posted near selected pieces of equipment where operation is critical for warranty and/or safety reasons.

1.3.2 Pre-Warranty Conference

Prior to contract completion, and at a time designated by the Contracting Officer, the Contractor shall meet with the Contracting Officer to develop a mutual understanding with respect to the requirements of this section. Communication procedures for Contractor notification of construction warranty defects, priorities with respect to the type of defect, reasonable time required for Contractor response, and other details deemed necessary by the Contracting Officer for the execution of the construction warranty shall be established/reviewed at this meeting. In connection with these requirements and at the time of the Contractor's quality control completion inspection, the Contractor shall furnish the name, telephone number and address of a licensed and bonded company which is authorized to initiate and pursue construction warranty work action on behalf of the Contractor. This point of contact will be located within the local service area of the warranted construction, shall be continuously available, and shall be responsive to Government inquiry on warranty work action and status. This requirement does not relieve the Contractor of any of its responsibilities in connection with other portions of this provision.

1.3.3 Contractor's Response to Construction Warranty Service Requirements

Following oral or written notification by the Contracting Officer, the Contractor shall respond to construction warranty service requirements in accordance with the "Construction Warranty Service Priority List" and the three categories of priorities listed below. The Contractor shall submit a report on any warranty item that has been repaired during the warranty period. The report shall include the cause of the problem, date reported, corrective action taken, and when the repair was completed. If the Contractor does not perform the construction warranty within the timeframes specified, the Government will perform the work and backcharge the construction warranty payment item established.

a. First Priority Code 1. Perform onsite inspection to evaluate situation, and determine course of action within 4 hours, initiate work within 6 hours and work continuously to completion or relief.

b. Second Priority Code 2. Perform onsite inspection to evaluate situation, and determine course of action within 8 hours, initiate work within 24 hours and work continuously to completion or relief.

c. Third Priority Code 3. All other work to be initiated within 3 work days and work continuously to completion or relief.

d. The "Construction Warranty Service Priority List" is as follows:

Code 1-Air Conditioning Systems

1) Recreational support.
2) Air conditioning leak in part of building, if causing damage.
3) Air conditioning system not cooling properly.

Code 1-Doors

1) Overhead doors not operational, causing a security, fire, or safety problem.
2) Interior, exterior personnel doors or hardware, not functioning properly, causing a

security, fire, or safety problem.

Code 3-Doors

1) Overhead doors not operational.
2) Interior/exterior personnel doors or hardware not functioning properly.

Code 1-Electrical

1) Power failure (entire area or any building operational after 1600 hours).
2) Security lights
3) Smoke detectors

Code 2-Electrical

1) Power failure (no power to a room or part of building).
2) Receptacle and lights (in a room or part of building).

Code 3-Electrical

Street lights.

Code 1-Gas

1) Leaks and breaks.
2) No gas to family housing unit or cantonment area.

Code 1-Heat

1) Area power failure affecting heat.
2) Heater in unit not working.

Code 2-Kitchen Equipment

1) Dishwasher not operating properly.
2) All other equipment hampering preparation of a meal.

Code 1-Plumbing

1) Hot water heater failure.
2) Leaking water supply pipes.

Code 2-Plumbing

1) Flush valves not operating properly.
2) Fixture drain, supply line to commode, or any water pipe leaking.
3) Commode leaking at base.

Code 3 –Plumbing

Leaky faucets.

Code 3-Interior

1) Floors damaged.
2) Paint chipping or peeling.

3) Casework.

Code 1-Roof Leaks
Temporary repairs will be made where major damage to property is occurring.

Code 2-Roof Leaks
Where major damage to property is not occurring, check for location of leak during rain and complete repairs on a Code 2 basis.

Code 2-Water (Exterior)
No water to facility.

Code 2-Water (Hot)
No hot water in portion of building listed.

Code 3-All other work not listed above.

1.3.5 Warranty Tags

At the time of installation, each warranted item shall be tagged with a durable, oil and water resistant tag approved by the Contracting Officer. Each tag shall be attached with a copper wire and shall be sprayed with a silicone waterproof coating. The date of acceptance and the QC signature shall remain blank until project is accepted for beneficial occupancy. The tag shall show the following information.

a. Type of product/material_____.

b. Model number_____.

c. Serial number_____.

d. Contract number_____.

e. Warranty period_____from_____to_____.

f. Inspector's signature_____.

g. Construction Contractor_____.
Address_____. Telephone number_____.

h. Warranty contact_____.
Address_____. Telephone number_____.

i. Warranty response time priority code_____.

j. WARNING - PROJECT PERSONNEL TO PERFORM ONLY OPERATIONAL MAINTENANCE DURING THE WARRANTY PERIOD.

## 1.4 MECHANICAL TESTING, ADJUSTING, BALANCING, AND COMMISSIONING

Prior to final inspection and transfer of the completed facility; all reports, statements, certificates, and completed checklists for testing, adjusting, balancing, and commissioning of mechanical systems shall be submitted to and approved by the Contracting Officer as specified inapplicable technical specification sections.

## 1.5 OPERATION AND MAINTENANCE MANUALS

Three (3) copies of all Operation and Maintenance (O&M) manuals shall be submitted as follows:

AFGHANISTAN ENGINEER DISTRICT

(1) DHL, FEDEX, UPS or any other courier service:

U.S. Army Corps of Engineers
Afghanistan Engineer District
House # 1, St. #1 West
West Wazir Akbar High School
Behind Amani High School
Kabul, Afghanistan
Attn: Chief, Engineering Branch

or

(2) U.S. Postal Service:
U.S. Army Corps of Engineers
Afghanistan Engineer District (CEAED-EC)
Attn.: Chief, Engineering Division
APO AE 09356

Operation manuals and maintenance manuals shall be provided in a common volume, complete, clearly differentiated and separately indexed.

## 1.6 FINAL CLEANING

The premises shall be left broom clean. Stains, foreign substances, and temporary labels shall be removed from surfaces. Carpet and soft surfaces shall be vacuumed. Equipment and fixtures shall be cleaned to a sanitary condition. Filters of operating equipment shall be replaced. Debris

shall be removed from roofs, drainage systems, gutters, and downspouts. Paved areas shall be swept and landscaped areas shall be raked clean. The site shall have waste, surplus materials, and rubbish removed. The project area shall have temporary structures, barricades, project signs, and construction facilities removed. A list of completed clean-up items shall be submitted on the day of final inspection.

**PART 2 PRODUCTS (NOT USED)**

**PART 3 EXECUTION (NOT USED)**

-- End of Section -

# SECTION 01781

# OPERATION AND MAINTENANCE DATA

## PART 1GENERAL

### 1.1 SUBMISSION OF OPERATION AND MAINTENANCE DATA

Submit Operation and Maintenance (O&M) Data specifically applicable to this contract and a complete and concise depiction of the provided equipment, product, or system. Organize and present information in sufficient detail to clearly explain O&M requirements at the system, equipment, component, and subassembly level. Include an index preceding each submittal. Submit in accordance with this section and Section 01335 SUBMITTAL PROCEDURES.

1.1.1 Package Quality

Documents must be fully legible. Poor quality copies and material with hole punches obliterating the text or drawings will not be accepted.

1.1.2 Package Content

Data package content shall be as shown in the paragraph titled "Schedule of Operation and Maintenance Data Packages." Comply with the data package requirements specified in the individual technical sections, including the content of the packages and addressing each product, component, and system designated for data package submission.

1.1.3 Changes to Submittals

Manufacturer-originated changes or revisions to submitted data shall be furnished by the Contractor if a component of an item is so affected subsequent to acceptance of the O&M Data. Changes, additions, or revisions required by the Contracting Officer for final acceptance of submitted data, shall be submitted by the Contractor within 30 calendar days of the notification of this change requirement.

### 1.2 TYPES OF INFORMATION REQUIRED IN O&M DATA PACKAGES

1.2.1 Operating Instructions

Include specific instructions, procedures, and illustrations for the following phases of operation:

1.2.1.1 Safety Precautions

List personnel hazards and equipment or product safety precautions for all operating conditions.

1.2.1.2 Operator Prestart

Include procedures required to set up and prepare each system for use.

1.2.1.3 Startup, Shutdown, and Post-Shutdown Procedures

Provide narrative description for Startup, Shutdown and Post-shutdown operating procedures including the control sequence for each procedure.

1.2.1.4 Normal Operations

Provide narrative description of Normal Operating Procedures. Include Control Diagrams with data to explain operation and control of systems and specific equipment.

1.2.1.5 Emergency Operations

Include Emergency Procedures for equipment malfunctions to permit a short period of continued operation or to shut down the equipment to prevent further damage to systems and equipment. Include Emergency Shutdown Instructions for fire, explosion, spills, or other foreseeable contingencies. Provide guidance and procedures for emergency operation of all utility systems including required valve positions, valve locations and zones or portions of systems controlled.

1.2.1.6 Operator Service Requirements

Include instructions for services to be performed by the operator such as lubrication, adjustment, inspection, and recording gage readings.

1.2.1.7 Environmental Conditions

Include a list of Environmental Conditions (temperature, humidity, and other relevant data) that are best suited for the operation of each product, component or system. Describe conditions under which the item equipment should not be allowed to run.

1.2.2 Preventive Maintenance

Include the following information for preventive and scheduled maintenance to minimize corrective maintenance and repair.

1.2.2.1 Lubrication Data

Include preventative maintenance lubrication data, in addition to instructions for lubrication provided under paragraph titled "Operator Service Requirements":

a. A table showing recommended lubricants for specific temperature ranges and applications.
b. Charts with a schematic diagram of the equipment showing lubrication points, recommended types and grades of lubricants, and capacities.
c. A Lubrication Schedule showing service interval frequency.

1.2.2.2 Preventive Maintenance Plan and Schedule

Include manufacturer's schedule for routine preventive maintenance, inspections, tests and adjustments required to ensure proper and economical operation and to minimize corrective maintenance. Provide manufacturer's projection of preventive maintenance work-hours on a daily, weekly, monthly, and annual basis including craft requirements by type of craft. For periodic calibrations, provide manufacturer's specified frequency and procedures for each separate operation.

1.2.3 Corrective Maintenance (Repair)

Include manufacturer's recommended procedures and instructions for correcting problems and making

repairs.

1.2.3.1 Troubleshooting Guides and Diagnostic Techniques

Include step-by-step procedures to promptly isolate the cause of typical malfunctions. Describe clearly why the checkout is performed and what conditions are to be sought. Identify tests or inspections and test equipment required to determine whether parts and equipment may be reused or require replacement.

1.2.3.2 Wiring Diagrams and Control Diagrams

Wiring diagrams and control diagrams shall be point-to-point drawings of wiring and control circuits including factory-field interfaces. Provide a complete and accurate depiction of the actual job specific wiring and control work. On diagrams, number electrical and electronic wiring and pneumatic control tubing and the terminals for each type, identically to actual installation configuration and numbering.

1.2.3.3 Maintenance and Repair Procedures

Include instructions and a list of tools required to repair or restore the product or equipment to proper condition or operating standards.

1.2.3.4 Removal and Replacement Instructions

Include step-by-step procedures and a list required tools and supplies for removal, replacement, disassembly, and assembly of components, assemblies, subassemblies, accessories, and attachments. Provide tolerances, dimensions, settings and adjustments required. Instructions shall include a combination of text and illustrations.

1.2.3.5 Spare Parts and Supply Lists

Include lists of spare parts and supplies required for maintenance and repair to ensure continued service or operation without unreasonable delays. Special consideration is required for facilities at remote locations. List spare parts and supplies that have a long lead-time to obtain.

1.2.4 Corrective Maintenance Work-Hours

Include manufacturer's projection of corrective maintenance work-hours including requirements by type of craft. Corrective maintenance that requires completion or participation of the equipment manufacturer shall be identified and tabulated separately.

1.2.5 Appendices

Provide information required below and information not specified in the preceding paragraphs but pertinent to the maintenance or operation of the product or equipment. Include the following:

1.2.6 Parts Identification

Provide identification and coverage for all parts of each component, assembly, subassembly, and accessory of the end items subject to replacement. Include special hardware requirements, such as requirement to use high-strength bolts and nuts. Identify parts by make, model, serial number, and source of supply to allow reordering without further identification. Provide clear and legible illustrations, drawings, and exploded views to enable easy identification of the items. When

illustrations omit the part numbers and description, both the illustrations and separate listing shall show the index, reference, or key number that will cross-reference the illustrated part to the listed part. Parts shown in the listings shall be grouped by components, assemblies, and subassemblies in accordance with the manufacturer's standard practice. Parts data may cover more than one model or series of equipment, components, assemblies, subassemblies, attachments, or accessories, such as typically shown in a master parts catalog

1.2.6.1 Warranty Information

List and explain the various warranties and include the servicing and technical precautions prescribed by the manufacturers or contract documents in order to keep warranties in force. Include warranty information for primary components such as the compressor of air conditioning system.

1.2.6.2 Personnel Training Requirements

Provide information available from the manufacturers that is needed for use in training designated personnel to properly operate and maintain the equipment and systems.

1.2.6.3 Testing Equipment and Special Tool Information

Include information on test equipment required to perform specified tests and on special tools needed for the operation, maintenance, and repair of components.

1.2.6.4 Contractor Information

Provide a list that includes the name, address, and telephone number of the General Contractor and each Subcontractor who installed the product or equipment, or system. For each item, also provide the name address and telephone number of the manufacturer's representative and service organization most convenient to the project site. Provide the name, address, and telephone number of the product, equipment, and system manufacturers.

## PART 2PRODUCTS

Not used.

## PART 3EXECUTION

### 3.1 TRAINING

Unless provided for elsewhere, the Contractor shall provide operational and maintenance training for all systems furnished under this contract in accordance with this section. The training shall not take place until the operation and maintenance manuals are submitted and approved.

Training will be given to personnel responsible for the operation and maintenance of the system at the installation. Orient training to the specific system being installed under this contract. Use operation and maintenance manual as the primary instructional aid in contractor provided activity personnel training. Manuals shall be delivered for each trainee with two additional sets delivered for archiving at the project site. Submit a training course schedule, syllabus, and training materials 14 days prior to the start of training. Obtain approval of the training course before beginning that phase of training. Furnish a qualified instructor approved by the system manufacturer to conduct training for the specific system.

Training manuals shall include an agenda, defined objectives and a detailed description of the subject

matter for each lesson. Furnish audio-visual equipment and all other training materials and supplies. A training day is defined as 8 hours of classroom or lab instruction, including two 15 minute breaks and excluding lunch time, Monday through Friday, during the daytime shift in effect at the training facility. For guidance, the Contractor should assume the attendees will have a high school education.

The Contractor shall videotape the training session on VHS tapes and provide the tapes to the Government.

-- End of Section --

**US Army Corps**
**of Engineers**
**Afghanistan Engineer District**

# AED Design Requirements:
## Sanitary Sewer & Septic System

Various Locations,
Afghanistan

FEBRUARY 2008

**TABLE OF CONTENTS**

AED DESIGN REQUIREMENTS
FOR
Sanitary Sewer & Septic Systems
Various Locations, Afghanistan


| Section | Page |
|---|---|
| **1. General** | **1** |
| **2. Field Investigations** | **1** |
| a) Site Survey | 1 |
| b) Percolation testing | 1 |
| **3. Sanitary Sewer System** | **4** |
| a) Sanitary Sewer System Layout | 4 |
| b) Protection of Water Supplies | 4 |
| c) Quantity of Wastewater | 5 |
| d) Gravity Sewers | 5 |
| e) Pipe, Fittings and Connections | 6 |
| f) Manholes | 6 |
| g) Building Connections and Service Lines | 6 |
| h) Cleanouts | 6 |
| i) Grease Interceptors | 6 |
| j) Field Tests and Inspections | 7 |
| **4. Septic System** | **7** |
| a) General | 7 |
| b) Septic Tank | 7 |
| c) Absorption Field | 8 |
| **5. As-Builts** | **10** |

Tables

| | |
|---|---|
| Table 1. Minimum Slopes for Sewers | 5 |
| Table 2. Soil Treatment Areas in Square Meters | 10 |

Figures Page

Figure 1. Percolation Testing 3

Examples

Example 1: Calculating Percolation Rates 2

Example 2: Size a Septic Tank 7

Example 3: Size of Absorption Field 9

Attachment

Attachment A – Septic Tank Details

Attachment B – Absorption Bed Details

Attachment C – Absorption Trench Details

**AED Design Requirements**
**Sanitary Sewer & Septic Systems**

## 1. General

The purpose of this document is to provide requirements to Contractors for any project requiring sanitary sewer and septic system design and construction.

## 2. Field Investigations

**a) Site Survey**. The first step, when designing the sewer system, is determining existing site conditions. The existing site conditions shall be determined by conducting field investigations at the proposed site. As part of the field investigations, the Contractor shall conduct a topographic survey to determine existing site characteristics. Knowing this information will help determine whether a gravity system or a pressure system will be used and where to locate the septic system. In addition, the Contractor shall conduct a utility survey to determine the locations of any nearby water lines, wells, sanitary sewers, storm sewers and electrical lines. By knowing the location of the existing utilities, the Contractor can properly lay out the system.

**b) Percolation Testing.** The second step, once the site has been surveyed, is to perform percolation tests. While performing the tests, observe the soil characteristics and watch for groundwater within the test area. The site may be considered unsuitable if the following occurs: the soil appears to have too much sand or clay; groundwater is encountered; and/or the percolation rates are too slow. If the site is determined to be unsuitable, the septic system will need to be relocated. If another location cannot be found, then an alternative treatment system will need to be designed. If this happens, contact the COR.

Percolation testing may be carried out with a shovel, posthole digger, solid auger or other appropriate digging instruments. Percolation tests shall be accomplished uniformly throughout the area where the absorption field is to be located. Percolation tests determine the acceptability of the site and serve as the basis of design for the liquid absorption. Percolation tests will be made as follows (see Figure 1).

(1) Six or more tests will be made in separate test holes uniformly spaced over the proposed absorption field site. The average of the six tests shall be determined and will be used as the final result. ***The location of each test shall be clearly and accurately shown on the site plan submitted to AED***.

(2) Dig or bore a hole to the required depth of the proposed trenches or bed, with dimensions necessary to enable visual inspection during percolation testing.

(3) Carefully scratch the bottom and sides of the excavation with a knife blade or sharp-pointed instrument to remove any smeared soil surfaces and to provide a natural soil interface into which water may percolate. Add 50 mm of gravel (of the same size that is to be used in the absorption field) to the bottom of the hole. In some types of soils the sidewalls of the test holes tend to cave in or slough off and settle to the bottom of the hole. It is most likely to occur when the soil is dry or when overnight soaking is required. The caving can be prevented and more accurate results obtained by placing in the test hole a wire cylinder surrounded by a minimum 25 mm layer of gravel (of the same size that is to be used in the absorption field.)

(4) Carefully fill the hole with clear water to a minimum depth of 300 mm above the gravel or sand. Keep water in the hole at least 4 hours and preferably overnight. In most soils it will be necessary to augment the water as time progresses. Determine the percolation rate 24 hours after water was first added to the hole. In sandy soils containing little clay, this prefilling procedure is not essential and the test may be made after water from one filling of the hole has completely seeped away.

(5) The percolation-rate measurement is determined by one of the following methods:

(a) If water remains in the test hole overnight, adjust the water depth to approximately 150 mm above the gravel. From a reference batter board, as shown in Figure 1, measure the drop in water level over a 30-minute period. This drop is used to calculate the percolation rate.

(b) If no water remains in the hole the next day, add clean water to bring the depth to approximately 150 mm over the gravel. From the batter board, measure the drop in water level at 30-minute intervals for 4 hours, refilling to 150 mm over the gravel as necessary. The drop in water level that occurs during the final 30-minute period is used to calculate the percolation rate.

(c) In sandy soils (or other soils in which the first 150 mm of water seeps away in less than 30 minutes after the overnight period), the time interval between measurements will be taken as 10 minutes and the test run for 1 hour. The drop in water level that occurs during the final 10 minutes is used to calculate the percolation rate.

The percolation rate is the number of minutes it takes to drop 25 mm. On page 10, Table 2 lists percolation rates and the corresponding absorption field sizing factor (liters/$m^2$/day). The sizing factors are used, in conjunction with average daily demand (ADD), to determine the size of the absorption field. The following is an example of how to calculate the percolation rate:

***Example 1: Calculating Percolation Rates - In 30 minutes, the measured drop in the water level is 15 mm.***

*Minutes/25 mm = Time/(drop/25 mm) = 30 minutes/(15 mm/25 mm) =* ***<u>50 Minutes/25 mm</u>***

*where,*

*Minutes/25 mm = Minutes for water to drop 25 mm.*

**Figure 1. Percolation Testing.**

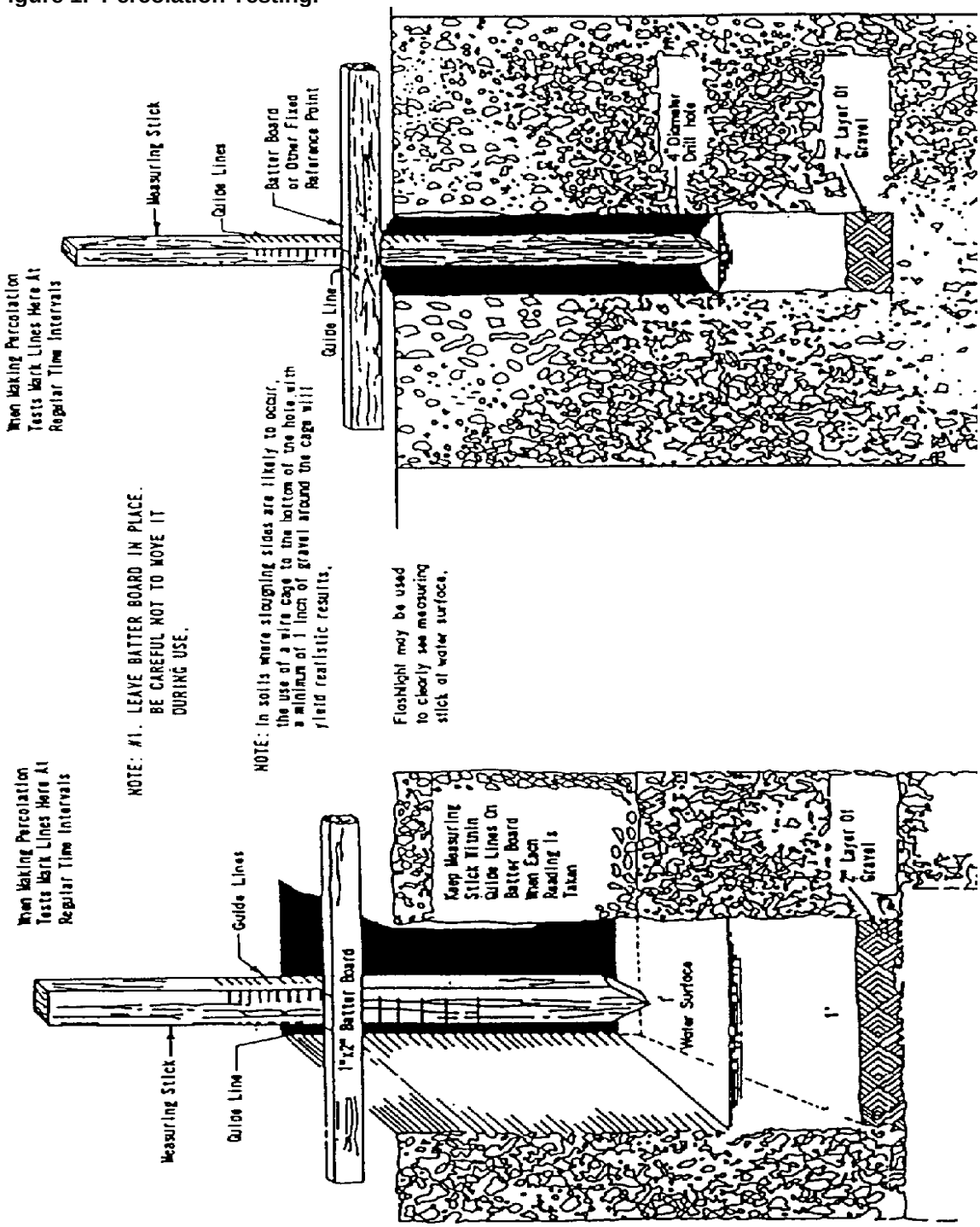

## 3. Sanitary Sewer System

**a) Sanitary Sewer System Layout.** The development of the sewer system (a.k.a. - sanitary pipe collection network) must await the determination of the proposed compound layout, including determining locations for: buildings (including final first floor elevations and utility connections), perimeter wall, roads, water well, septic system, power supply system, storm drainage and other features. Once the locations for these structures are determined, the Contractor can begin designing the layout of the sanitary sewers in conjunction with the water supply system. The following general criteria will be used where possible to provide a layout which is practical and economical and meets hydraulic requirements:

(1) Follow slopes of natural topography for gravity sewers.

(2) Check subsurface investigations for groundwater levels and types of subsoil encountered. If possible, avoid areas of high groundwater and the placement of sewers below the groundwater table.

(3) Avoid routing sewers through areas which require extensive restoration or underground demolition.

(4) Depending upon the topography and building location, the most practical location of sanitary sewer lines is along one side of the street. In other cases they may be located behind buildings midway between streets. The intent is to provide future access to the lines for maintenance without impacting vehicular traffic.

(5) Avoid placing manholes in low-lying areas where they could be submerged by surface water or subject to surface water inflow. In addition, all manholes shall be constructed 50 mm higher than the finished grade, with the ground sloped away from each manhole for drainage.

(6) Sewer lines shall have a minimum of 800 mm of cover for frost protection.

(7) Locate manholes at change in direction, pipe size or slope of gravity sewers.

(8) Sewer sections between manholes shall be straight. The use of a curved alignment shall not be permitted.

(9) If required by the design, locate manholes at intersections of streets where possible. This will minimize vehicular traffic disruptions if maintenance is required.

(10) Sewer lines less than 1.25 meters deep under road crossings shall have a reinforced concrete cover of at least 150 mm thickness around the pipe or shall utilize a steel or ductile iron carrier pipe. It is recommended to continue the reinforced concrete cover or carrier pipe a minimum of one (1) meter beyond the designated roadway.

(11) Verify that final routing selected is the most cost effective alternative that meets service requirements.

**b) Protection of water supplies**. Sanitary sewer design shall meet the following criteria:

(1) Sewers shall be located no closer than 15 meters measured horizontally to water wells or earthen reservoirs that are used for potable water supplies.

(2) Sewers shall be located no closer than 3 meters measured horizontally to potable water lines; where the bottom of the water line will be at least 300 mm above the top of the sewer line, the horizontal space shall be at a minimum of 1.83 meters.

(3) Sewer lines crossing above potable water lines shall be constructed of suitable pressure pipe or fully encased in concrete for a distance of 3 meters measured horizontally on each side of the crossing. If concrete encasement is used, the sewer line shall be encased with a minimum of 150 mm of cover all the way around the pipe. Pressure pipe will be as required for force mains in TM 5-814-2/AFM 88-11, Chapter 2, and shall have no joint closer than 1 meter horizontally to the crossing, unless it is fully encased in concrete.

**c) Quantity of Wastewater**. If not specified in the contract, the Contractor shall verify the average daily flow considering both resident (full occupancy) and non-resident (8hr per day) population. The average daily flow will represent the total waste volume generated over a 24-hour period, and shall be based on the total population of the facility and usage rate of 190 liters per capita day (water usage). The wastewater flow rate shall be calculated as approximately 80% of water usage rate.

**d) Gravity Sewers.** Gravity sewers shall be designed to flow at a maximum in the following way: laterals and mains – 80 percent full, building connections – 70 percent full. Sanitary sewer velocities shall be designed to provide a minimum velocity of 0.6 meters per second (mps) or at the ADD flow rate and a minimum velocity of 0.8 to 1.05 mps at the peak diurnal flow rate. In no case shall the velocity drop below 0.3 mps, to prevent settlement of organic solids suspended in the wastewater. However, regardless of flow and depth the minimum pipe sizes to be used are 150 mm for building connections and 200 mm for all other sewers. Unless otherwise indicated (see Paragraph 3 (g) Building Connections and Service Lines below), gravity sewer pipe shall be installed in straight and true runs in between manholes with constant slope and direction. Pipe slopes shall be sufficient to provide the required minimum velocities and depths of cover on the pipe. Table 1 below provides the minimum slopes for various diameter pipes.

**Table 1. Minimum Slopes for Sewers.**

| Sewer Size | Minimum Slope in Meters per 100 Meters |
|---|---|
| 100 mm | 1.00 |
| 150 mm | 0.62 |
| 200 mm | 0.40 |
| 250 mm | 0.28 |
| 300 mm | 0.22 |
| 350 mm | 0.17 |
| 375 mm | 0.15 |
| 400 mm | 0.14 |
| 450 mm | 0.12 |
| 525 mm | 0.10 |
| 600 mm | 0.08 |

**e) Pipe, Fittings and Connections**. Pipe, fittings and connections shall conform to the respective specifications and other requirements as listed in Contract Section 01015 and all of its referenced codes.

**f) Manholes.**

(1) The distance between manholes must not exceed 120 meters in sewers of less than 450 mm in diameter. For sewers 450 mm in diameter and larger, a spacing of up to 180 meters is allowed provided the velocity is sufficient to prevent settlement of solids.

(2) For pipe connections, the crown of the outlet pipe from a manhole will be on line with or below the crown of the inlet pipe. Where conditions are such as to produce unusual turbulence in the manhole, it may be necessary to provide an invert drop to allow for entry head, or increased velocity head, or both. Where the invert of the inlet pipe would be more than 450 millimeters above the manhole floor, a drop connection will be provided.

(3) Manhole frames and covers must be sufficient to withstand impact from wheel loads where subject to vehicular traffic. Covers with nominal sides measuring 762 mm or larger shall be installed where personnel entry may occur. Cover frames and/or heavy duty hinges shall prevent covers from dropping into the manholes, or circular covers shall be provided.

(4) The following construction practices will be required: 1) Smooth flow channels will be formed in the manhole bottom. Laying half tile through the manhole, or full pipe with the top of the pipe being broken out later, are acceptable alternatives; 2) for manholes over 1 meter in depth, one vertical wall with a fixed side-rail ladder will be provided; 3) drop connections will be designed as an integral part of the manhole wall and base; 4) in areas subject to high groundwater tables, manholes will be constructed of materials resistant to groundwater infiltration.

(5) The primary construction materials to be used for manhole structures are precast concrete rings and cast-in-place, reinforced concrete. Cast-in-place construction permits greater flexibility in the configuration of elements, and by varying reinforcing the strength of similar sized structures can be adjusted to meet requirements. In general, materials used should be compatible with local construction resources, labor experience, and should be cost competitive. Concrete shall have a 21 MPa minimum compressive strength at 28 days.

**g) Building Connections and Service Lines.** Building connections will be planned to eliminate as many bends as practical and provide convenience in rodding. Bends greater than 45 degrees made with one fitting shall be avoided; combinations of elbows such as 45-45 or 30-60 degrees should be used with a cleanout provided.

**h) Cleanouts**. Cleanouts must be installed on all sewer building connections, if manholes are not used, to provide a means for inserting cleaning rods into the underground pipe. An acceptable cleanout will consist of an upturned pipe terminating at, or slightly above, final grade with a plug or cap. Preferably the cleanout pipe will be of the same diameter as the building sewer, and never smaller than 150 mm.

**i) Grease Interceptors.** Grease interceptors are used to remove grease from wastewater to prevent it from entering the sanitary sewer and septic systems. All Dining Facilities (DFACs) shall incorporate preliminary treatment with use of a grease interceptor prior to the sanitary sewer system. The grease interceptor shall be of reinforced cast-in-place concrete, reinforced precast concrete or equivalent capacity commercially available steel, with removable three-section, 9.5 mm checker-plate cover, and shall be installed outside the building. Steel grease interceptors shall be installed in a concrete pit and shall be epoxy-coated to resist corrosion as recommended by the manufacturer. Concrete shall have 21MPa minimum compressive strength at 28 days. The grease interceptor shall connect to the sanitary sewer system.

**j) Field Tests and Inspections.** Prior to burying the sewer lines, field inspections and testing shall be done to ensure the lines were properly installed and free of leaks. When conducting tests and inspections the following steps shall be conducted:

(1) Check each straight run of pipeline for gross deficiencies by holding a light in a manhole; it shall show practically a full circle of light through the pipeline when viewed from the adjoining end of the line. When pressure piping is used in a non-pressure line for non-pressure use, test this piping as specified for non-pressure pipe.

(2) Test lines for leakage by either infiltration tests or exfiltration tests.

(3) Deflection testing will not be required however; field quality control shall ensure that all piping is installed in accordance with deflection requirements established by the manufacturer.

## 4. Septic System

**a) General.** When determining an appropriate septic tank location, the Contractor shall provide protection for the septic system by ensuring that vehicles, material storage and future expansion shall be kept away from the area. Signage or other prevention methods (i.e., pipe bollards) shall be used to provide this protection. The finished grade for the site shall ensure that storm water runoff shall drain away from the site to prevent ponding, inflow and infiltration. Once an appropriate site is located, the Contractor shall conduct soil investigations for the site to determine ground water levels, soil conditions and the percolation rate.

**b) Septic Tank.** Septic tanks are buried, watertight receptacles designed and constructed to receive and partially treat wastewater. The tank separates solids from the liquid, provides limited digestion of organic matter, stores solids, and allows the clarified liquid to discharge for further treatment and disposal. Settleable solids and partially decomposed sludge accumulate at the bottom of the tank, while scum rises to the top of the tank's liquid level. The partially clarified liquid is allowed to flow through an outlet opening position below the floating scum layer. The clarified liquid will be disposed of to the absorption field for further treatment and disposal.

Factors to be considered in the design of a septic tank include tank geometry, hydraulic loading, inlet and outlet configurations, number of compartments and temperature. If a septic tank is hydraulically overloaded, retention time may become too short and solids may not settle properly.

For Afghanistan, a baffled multi-compartment or dual chamber design shall be utilized. Refer to Attachment A for further details. The septic tank shall be designed with a length-to-width ratio of 2:1 to 3:1 and the liquid depth should be between 1.2 meters and 1.8 meters. This depth is determined by the outlet pipe invert elevation. If not specified in the contract, the septic tank shall be sized based on the average daily demand of 190 liters/capita/day, ***plus*** an additional 100% for sludge storage capacity and peak flows. The tank shall be constructed of reinforced, cast-in-place concrete, with a minimum compressive strength of 21MPa at 28 days. Wastewater influent and effluent shall enter and exit on the short sides of the tank, which will allow the wastewater longer detention and settling time. The baffled tank shall have two compartments, with the first compartment (influent entry point) having 2/3 thirds the volume capacity of the tank. The tank shall have a minimum earth backfill cover of 300 mm. Access shall be provided at the entry (influent) and exit (effluent) points of the tank by installing reinforced concrete risers, with steel access hatches, that will rise 50 mm above the finished grade. The following is an example of how to determine the volume and dimensions of the septic tank:

***Example 2: Size a Septic Tank - Size a septic tank for a design population of 120 capita at 152 liters/capita/day (80% of 190 liters/capita/day.)***

*-Assume that tank volume and dimensions are not specified in the contract documents.*

*V = ADDP*c*2 = 152 (liters/captia/day)*120(capita)*2 =* ***36,480 liters (36.48 $m^3$)***

*Where,*

*ADDP = Average Daily Demand per Person (liters/capita/day)*
*c = design population (capita)*
*2 = represents an additional 100% storage for sludge and peak surges*

*-Assume 1.8 meter liquid depth and a length-to-width ratio of 2:1.*

*A = V/1.8 meters (liquid depth) = 36.48 ($m^3$)/1.8 (meters) = 20.27 $m^2$*
*LW = A*
*2W*(W) = 20.27 ($m^2$)*
*$W^2$ = 20.27 ($m^2$)/2*
*W = (10.135 $m^2$)$^{1/2}$ = 3.18 meters (3200 mm*)*
*L = 2*W = 2*3.18 meters = 6.37 meters (6400 mm*)*

*Inside dimensions of tank =* ***6400 mm X 3200 mm X 1800 mm (liquid depth)***

*where,*

*A = Area*
*L = Length (meters) = 2*W*
*W = Width (meters)*

**Always round up to the nearest 100 mm for final septic tank dimensions.*

**c) Absorption Field.** Absorption fields (also termed "leach fields") are used, in conjunction with septic tank treatment, as the final treatment and disposal process for the septic system. Absorption fields normally consist of perforated distribution pipe laid in trenches or beds that are filled with rock. Refer to Attachments B or C for minimum perforation requirements. The septic tank effluent is distributed by the perforated pipe and allowed to percolate through the ground, where it is filtered and treated by naturally occurring bacteria and oxygen.

Once effluent is released from the septic tank, it travels by gravity through a solid 100 mm diameter PVC pipe, at a minimum 1.0% slope, to the distribution box. The distribution box is a reinforced concrete structure that distributes the septic tank effluent evenly throughout the absorption field through several 100 mm diameter perforated pipes. The distribution pipe is placed at a depth between 650 mm to 1500 mm. Because of the desire for the effluent to be distributed evenly over the absorption trenches or beds, the perforated pipe shall have a maximum slope of 0.5% and shall be capped at the end of each pipe. Generally, distribution piping is spaced from one meter to 1.8 meters apart and is no longer than 30 meters.

Absorption trenches are a minimum 610 mm wide but can be widened to shorten the length of the trench. A bed can be as wide as needed based on the total area needed for absorption. The absorption field has three (3) zones:

(1) The first zone is the absorption zone, which is the layer of in-situ material that filters and treats the effluent. This zone is determined to be suitable material for wastewater treatment based on the percolation test results, with a minimum thickness of 600 mm. Below the absorption zone, the material is considered unsuitable soil or bed rock or the seasonal water table is too high. If percolation tests determine that there isn't a minimum 600 mm of suitable soil, the Contractor can remove the unsuitable soil to the desired depth and replace it with material determined to be suitable; however, the Contractor must get approval from the COR before attempting this.

(2) The second zone is the drainage zone, which is a 300 mm thick layer of rock fill, where the distribution pipe network lies. The bottom of this zone is filled with a minimum 150 mm of 19 mm to 38 mm diameter rock. The perforated distribution pipe is laid on top of the rock. A minimum of 50 mm of rock is placed carefully over the pipe network, and then a semipermeable membrane (geotextile fabric) is placed over the rock to prevent fine-grained backfill from clogging it.

(3) The final zone is the backfill zone. This is the upper most part of the absorption field, where backfill material is placed and is a minimum 500 mm thick. The backfill material protects the lower lying zones from storm water infiltration and freezing. The Contractor shall leave a mound of backfill material above the desired finished grade to allow for settlement.

Table 2 lists percolation rates and the corresponding sizing factor (liters/$m^2$/day). The sizing factors are used, in conjunction with average daily demand (ADD), to determine the size of the absorption field. The following is an example of how to calculate the absorption field size for trenches and beds:

***Example 3: Size of Absorption Field - Size an absorption field for a facility with an average daily demand of 18,170 liters/day and a percolation rate of 50 minutes.***

*A = ADD*Water Absorption of Soil = 18,170 liters/day*0.054 $m^2$/liters/day =* ***981.18 $m^2$***

*where,*

*A = Area footprint needed for the absorption field ($m^2$)*
*ADD = Average Daily Demand (liters/day)*
*Water Absorption of Soil = By looking below, at Table 2, a percolation rate of 50 minutes falls in the 46 to 60 row and the correlating sizing factor is determined to be 0.054* $m^2$/liters/day.

*Dimensions for trenches:*

*-Assume a 0.9144 meter wide trench bottom.*
*-Assume maximum trench length to be 30 meters.*

**$N_T = A/(T_w*T_L)$ = 981.18 $m^2$/(0.9144 m*30 m) = 35.77, say:* ***36 Trenches (0.9144 meters X 30 meters)***

*where,*

*$N_T$ = Number of Trenches*
*$T_w$ = Trench width (meters)*
*$T_L$ = Trench Length (meters)*

**Note: Trench bottom area can be reduced by 20 percent, if 305 mm of rock is placed below the distribution pipe. The area can be reduced by 34 percent for 457 mm of rock being placed below the pipe and by 40% for the maximum rock depth of 610 mm. Keep in mind that the additional rock added below the distribution pipe adds additional thickness required for the drainage zone. For example, there is normally 150 mm of rock placed below the pipe for a total 300 mm thickness for the drainage zone. If 305 mm of rock is placed below the pipe, the total thickness for the drainage zone increases to 455 mm of rock, including, 305 mm below the pipe; 100 mm around the pipe; and 50 mm above the pipe.*

*Dimensions for bed:*

*Absorption Bed Dimensions = $A^{1/2}$ = (981.18 $m^2)^{1/2}$ = 31.32 meters, say: 32 meters per side*
*Absorption Bed Dimensions =* ***32 meters X 32 meters***

Refer to Attachments B and C for further design details of absorption fields.

**Table 2. Soil Treatment Areas in Square Meters.**

| Percolation Rate, Minutes for Water to Drop 25 mm | Water Absorption of Soil ($m^2$/liters/day) |
|---|---|
| Faster than 0.1 | Soil too coarse for sewage treatment |
| 0.1 to 5 | 0.020 |
| 6 to 15 | 0.031 |
| 16 to 30 | 0.041 |
| 31 to 45 | 0.049 |
| 46 to 60 | 0.054 |
| Slower than 60 | Soil too fine for sewage treatment |

## 5. As-Builts

Upon completion of installing the sanitary sewer and septic systems, the Contractor shall submit editable CAD format As-Built drawings. The drawings shall show the final product as it was constructed in the field, with the exact dimensions, locations, materials used and any changes made to the original design. Refer to Contract Sections 01335 and 01780A of the specific project for additional details.

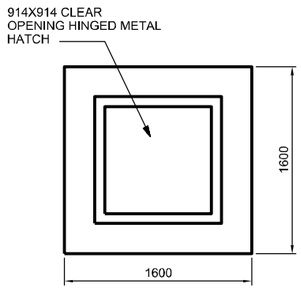


TOP SLAB PLAN

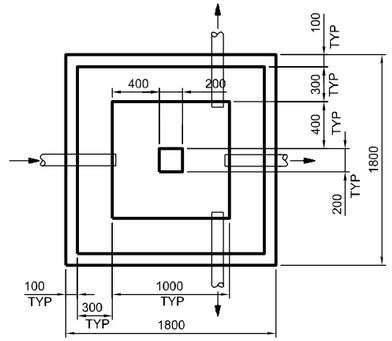


FOUNDATION SLAB PLAN

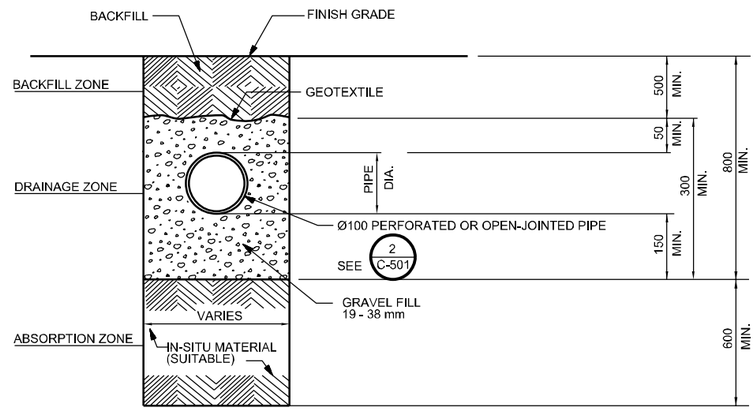


## ABSORPTION FIELD DETAIL

NOT TO SCALE

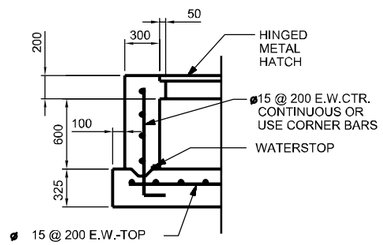


TYP WALL SECTION

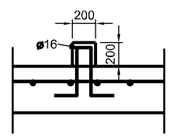


SECTION

## DISTRIBUTION BOX DETAIL

NOT TO SCALE

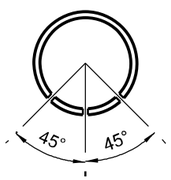


## 2 C-501 PREFORATED PIPE SECTION

NOT TO SCALE

NOTE:

1. THREE (3) ROWS OF 13 MM DIA. HOLES.
2. EACH ROW OF HOLES SHALL BE SPACED AT A DISTANCE OF 100 MM CENTER-TO-CENTER.
3. HOLES SHALL BE ON THE BOTTOM HALF OF THE PIPE, AS SHOWN.
4. USE MINIMUM 100 MM DIA. SCHEDULE 40 PVC.

**NOTE:**

1. PROVIDE PROPER ORIENTATION OF INLET AND OUTLET CONNECTIONS ON PROJECT CIVIL SITE PLANS.
2. TANK DIMENSIONS SHALL HAVE A LENGTH TO WIDTH RATIO OF BETWEEN 2:1 AND 3:1.

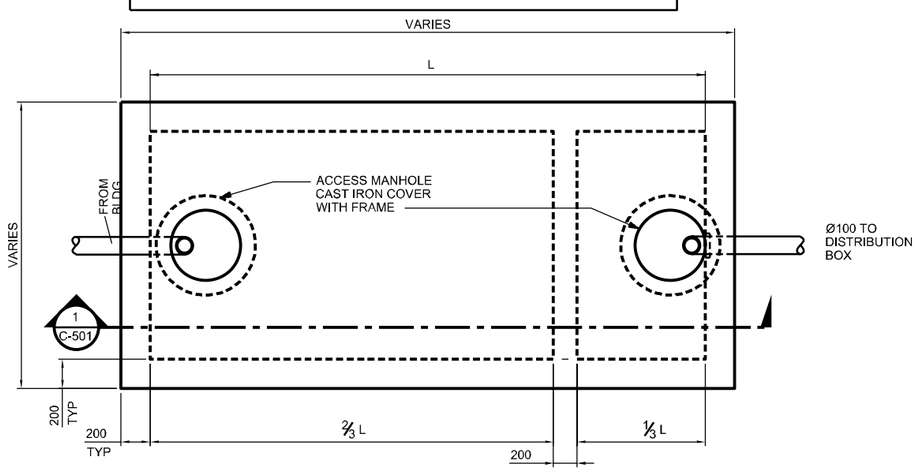


## CONCRETE SEPTIC TANK PLAN VIEW

NOT TO SCALE

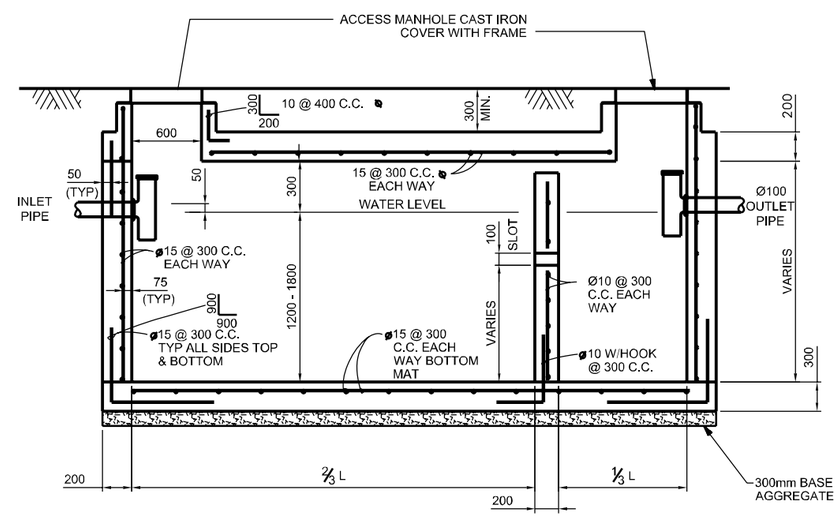


## 1 C-501 CONCRETE SEPTIC TANK SECTION

NOT TO SCALE

NOTE: ALL DIMENSIONS IN MILLIMETERS, UNLESS OTHERWISE NOTED.

US ARMY CORPS OF ENGINEERS AFGHANISTAN ENGINEER DISTRICT

| SYMBOL | DESCRIPTION | DATE | APPR. | SYMBOL | DESCRIPTION | DATE | APPR. |
|---|---|---|---|---|---|---|---|

DESIGNED BY: DATE: REV.
DWN BY: CKD BY: DESIGN FILE NO.: DRAWING CODE:
REVIEWED BY: FILE NAME:
SUBMITTED BY: PLOT SCALE:
CONTRACT NO.

U.S. ARMY CORPS ENGINEER
AFGHANISTAN ENGINEER DISTRICT
APO AE 96338-5010

AFGHANISTAN ENGINEER DISTRICT
KABUL, AFGHANISTAN

# ATTACHMENT "A" SEPTIC TANK DETAILS

SHEET REFERENCE NUMBER:

SHEET -- OF --

A1 Size 594mm x 841mm

## 2 C-502 PREFORATED PIPE SECTION

NOT TO SCALE

NOTE:

1. THREE (3) ROWS OF 13 MM DIA. HOLES.
2. EACH ROW OF HOLES SHALL BE SPACED AT A DISTANCE OF 100 MM CENTER-TO-CENTER.
3. HOLES SHALL BE ON THE BOTTOM HALF OF THE PIPE, AS SHOWN.
4. USE MINIMUM 100 MM DIA. SCHEDULE 40 PVC.

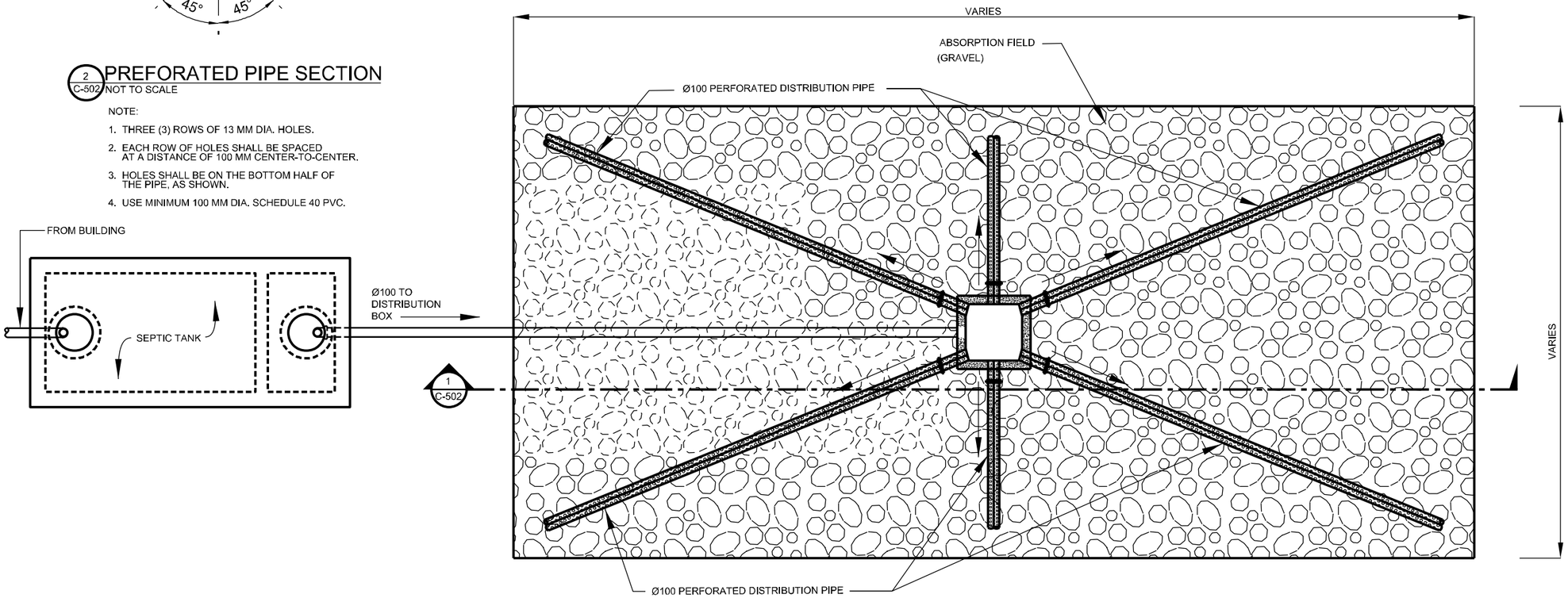


## SEPTIC SYSTEM BED CONFIGURATION PLAN VIEW

NOT TO SCALE

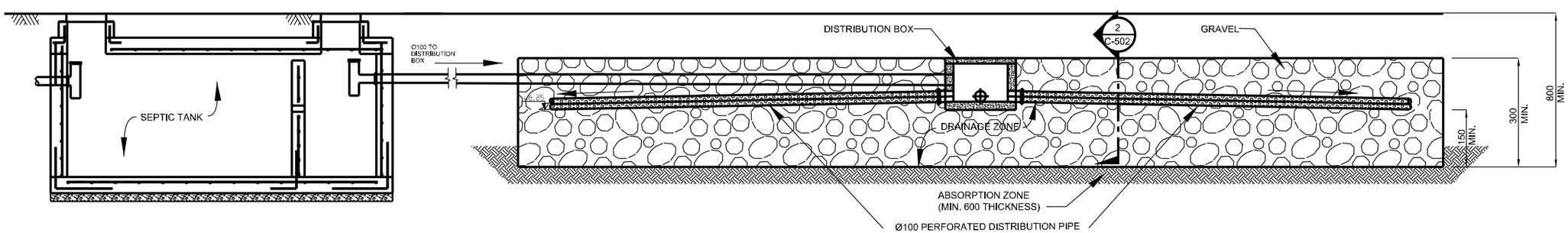


## 1 C-502 SEPTIC SYSTEM BED CONFIGURATION SECTION VIEW

NOT TO SCALE

US ARMY CORPS OF ENGINEERS AFGHANISTAN ENGINEER DISTRICT

| SYMBOL | DESCRIPTION | DATE | APPR. | SYMBOL | DESCRIPTION | DATE | APPR. |
|---|---|---|---|---|---|---|---|

DESIGNED BY: DWN BY: CKD BY: REVIEWED BY: SUBMITTED BY:

DATE: YYYY/MM/DD DESIGN FILE NO.: DRAWING CODE: FILE NAME: PLOT SCALE: CONTRACT NO.: YYXXXXXX REV.: __

U.S. ARMY CORPS ENGINEER
AFGHANISTAN ENGINEER DISTRICT
APO AE 96338-5010

AFGHANISTAN ENGINEER DISTRICT
KABUL, AFGHANISTAN

# ATTACHMENT "B" ABSORPTION BED DETAILS

SHEET REFERENCE NUMBER:

SHEET --- OF ---

A1 Size 594mm x 841mm

NOTE: TRENCH DIMENSIONS AND NUMBER OF TRENCHES SHOWN ARE FOR REFERENCE ONLY. THE FINAL DESIGN AND LAYOUT OF THE SEPTIC SYSTEM SHALL BE SITE SPECIFIC.

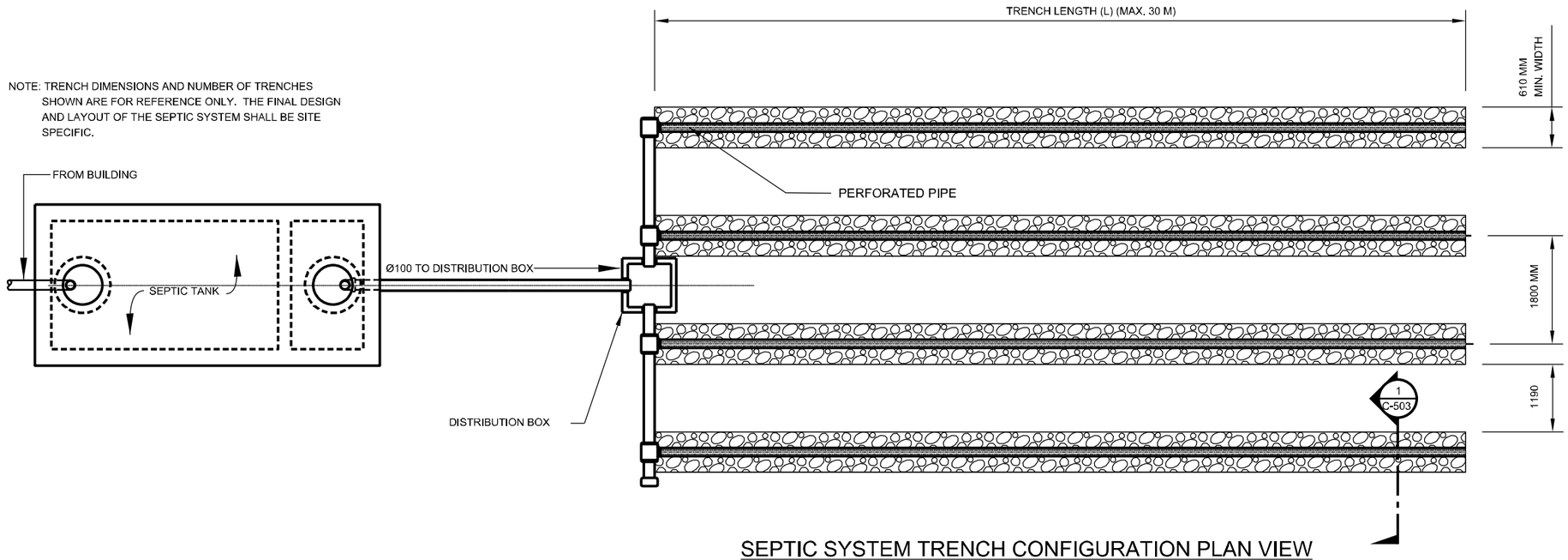


## SEPTIC SYSTEM TRENCH CONFIGURATION PLAN VIEW

NOT TO SCALE

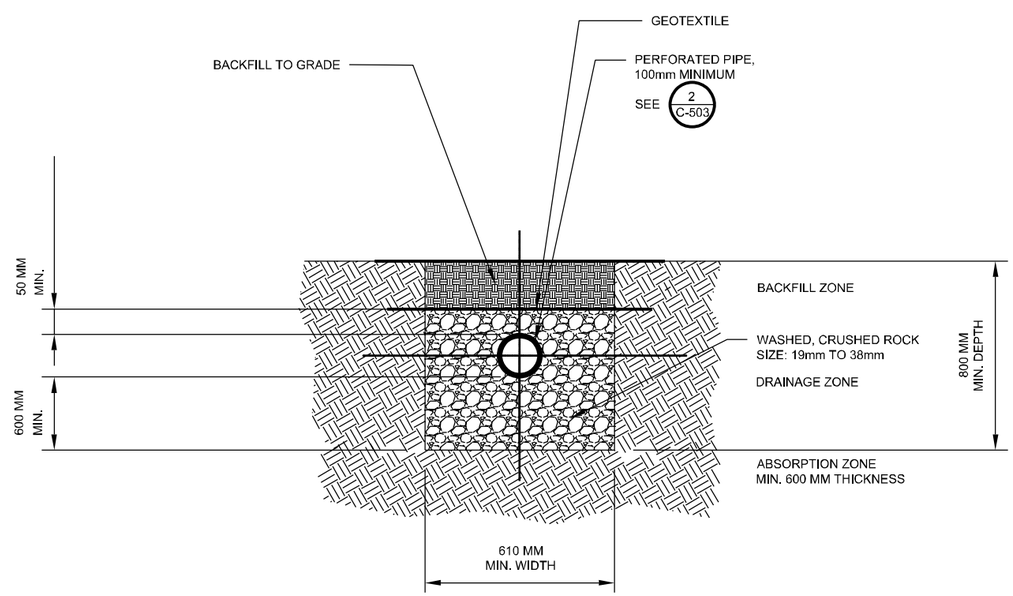


## 1 C-503 SEPTIC SYSTEM TRENCH CONFIGURATION SECTION VIEW

NOT TO SCALE

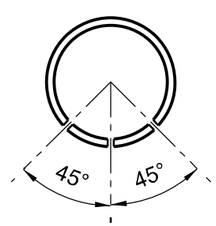


## 2 C-503 PREFORATED PIPE SECTION

NOT TO SCALE

NOTE:

1. THREE (3) ROWS OF 13 MM DIA. HOLES.
2. EACH ROW OF HOLES SHALL BE SPACED AT A DISTANCE OF 100 MM CENTER-TO-CENTER.
3. HOLES SHALL BE ON THE BOTTOM HALF OF THE PIPE, AS SHOWN.
4. USE MINIMUM 100 MM DIA. SCHEDULE 40 PVC.

US ARMY CORPS OF ENGINEERS AFGHANISTAN ENGINEER DISTRICT

| SYMBOL | DESCRIPTION | DATE | APPR. | SYMBOL | DESCRIPTION | DATE | APPR. |
|---|---|---|---|---|---|---|---|

DESIGNED BY: DATE: XXXXXX REV. ___
DWN BY: CKD BY: DESIGN FILE NO.:
REVIEWED BY: DRAWING CODE:
SUBMITTED BY: FILE NAME: PLOT SCALE: CONTRACT NO. YYXXXXX

U.S. ARMY CORPS ENGINEER
AFGHANISTAN ENGINEER DISTRICT
APO AE 96339-5010

AFGHANISTAN ENGINEER DISTRICT
KABUL, AFGHANISTAN

# ATTACHMENT "C"

SHEET REFERENCE NUMBER:

SHEET --- OF ---

11 Size 594mm x 841mm

| TRANSMITTAL OF SHOP DRAWINGS, EQUIPMENT DATA, MATERIAL SAMPLES, OR MANUFACTURER'S CERTIFICATES OF COMPLIANCE *(Read instructions on the reverse side prior to initiating this form)* | DATE | TRANSMITTAL NO. |
|---|---|---|

## SECTION I - REQUEST FOR APPROVAL OF THE FOLLOWING ITEMS *(This section will be initiated by the contractor)*

| TO: | FROM: | CONTRACT NO. | CHECK ONE: ☐ THIS IS A NEW TRANSMITTAL ☐ THIS IS A RESUBMITTAL OF TRANSMITTAL _____ |
|---|---|---|---|
| SPECIFICATION SEC. NO. *(Cover only one section with each transmittal)* | PROJECT TITLE AND LOCATION | | CHECK ONE: THIS TRANSMITTAL IS FOR ☐ FIO ☐ GOV'T. APPROVAL |

| ITEM NO. *a.* | DESCRIPTION OF ITEM SUBMITTED *(Type size, model number/etc.)* *b.* | MFG OR CONTR. CAT., CURVE DRAWING OR BROCHURE NO. *(See instruction no. 8)* *c.* | NO. OF COPIES *d.* | CONTRACT REFERENCE DOCUMENT | | FOR CONTRACTOR USE CODE *g.* | VARIATION *(See instruction No. 6)* *h.* | FOR CE USE CODE *i.* |
|---|---|---|---|---|---|---|---|---|
| | | | | SPEC. PARA. NO. *e.* | DRAWING SHEET NO. *f.* | | | |
| | | | | | | | | |
| | | | | | | | | |
| | | | | | | | | |
| | | | | | | | | |
| | | | | | | | | |
| | | | | | | | | |
| | | | | | | | | |
| | | | | | | | | |
| | | | | | | | | |
| | | | | | | | | |

| REMARKS | I certify that the above submitted items have been reviewed in detail and are correct and in strict conformance with the contract drawings and specifications except as other wise stated. _____ NAME AND SIGNATURE OF CONTRACTOR |
|---|---|

## SECTION II - APPROVAL ACTION

| ENCLOSURES RETURNED *(List by Item No.)* | NAME, TITLE AND SIGNATURE OF APPROVING AUTHORITY | DATE |
|---|---|---|
| | | |

# INSTRUCTIONS

1. Section I will be initiated by the Contractor in the required number of copies.

2. Each transmittal shall be numbered consecutively in the space provided for "Transmittal No.". This number, in addition to the contract number, will form a serial number for identifying each submittal. For new submittals or resubmittals mark the appropriate box; on resubmittals, insert transmittal number of last submission as well as the new submittal number.

3. The "Item No." will be the same "Item No." as indicated on ENG FORM 4288-R for each entry on this form.

4. Submittals requiring expeditious handling will be submitted on a separate form.

5. Separate transmittal form will be used for submittals under separate sections of the specifications.

6. A check shall be placed in the "Variation" column when a submittal is not in accordance with the plans and specifications--also, a written statement to that effect shall be included in the space provided for "Remarks".

7. Form is self-transmittal, letter of transmittal is not required.

8. When a sample of material or Manufacturer's Certificate of Compliance is transmitted, indicate "Sample" or "Certificate" in column c, Section I.

9. U.S. Army Corps of Engineers approving authority will assign action codes as indicated below in space provided in Section I, column i to each item submitted. In addition they will ensure enclosures are indicated and attached to the form prior to return to the contractor. The Contractor will assign action codes as indicated below in Section I, column g, to each item submitted.

THE FOLLOWING ACTION CODES ARE GIVEN TO ITEMS SUBMITTED

| | | | | | |
|---|---|---|---|---|---|
| A | -- | Approved as submitted. | E | -- | Disapproved (See attached). |
| B | -- | Approved, except as noted on drawings. | F | -- | Receipt acknowledged. |
| C | -- | Approved, except as noted on drawings. Refer to attached sheet resubmission required. | FX | -- | Receipt acknowledged, does not comply as noted with contract requirements. |
| D | -- | Will be returned by separate correspondence. | G | -- | Other *(Specify)* |

10. Approval of items does not relieve the contractor from complying with all the requirements of the contract plans and specifications.

*(Reverse of ENG Form 4025-R)*

# SUBMITTAL REGISTER

(ER 415 1-10)

CONTRACT NO.

TITLE AND LOCATION

CONTRACTOR

SPECIFICATION SECTION

| ACTIVITY NO a. | TRANS-MITTAL NO. b. | ITEM NO c. | SPECIFICATION PARAGRAPH NUMBER d. | DESCRIPTION OF ITEM SUBMITTED e. | TYPE OF SUBMITTAL: DATA f. | DRAWINGS g. | INSTRUCTIONS h. | SCHEDULES i. | STATEMENTS j. | REPORTS k. | CERTIFICATES l. | SAMPLES m. | RECORDS n. | CLASSIFICATION: INFORMATION ONLY o. | GOVERNMENT APPROVED p. | REVIEWER q. | CONTRACTOR SCHEDULE DATES: SUBMIT r. | APPROVAL NEEDED BY s. | MATERIAL NEEDED BY t. | CONTRACTOR ACTION: CODE u. | DATE v. | SUBMIT TO GOVERN-MENT w. | GOVERNMENT ACTION: CODE x. | DATE y. | REMARKS z. |
|---|---|---|---|---|---|---|---|---|---|---|---|---|---|---|---|---|---|---|---|---|---|---|---|---|---|
| | | | | | | | | | | | | | | | | | | | | | | | | | |

ENG FORM 4288-R, MAR 95 EDITION OF SEP 93 IS OBSOLETE. PAGE 1 OF ____ PAGES (Proponent: CEMP-CE)

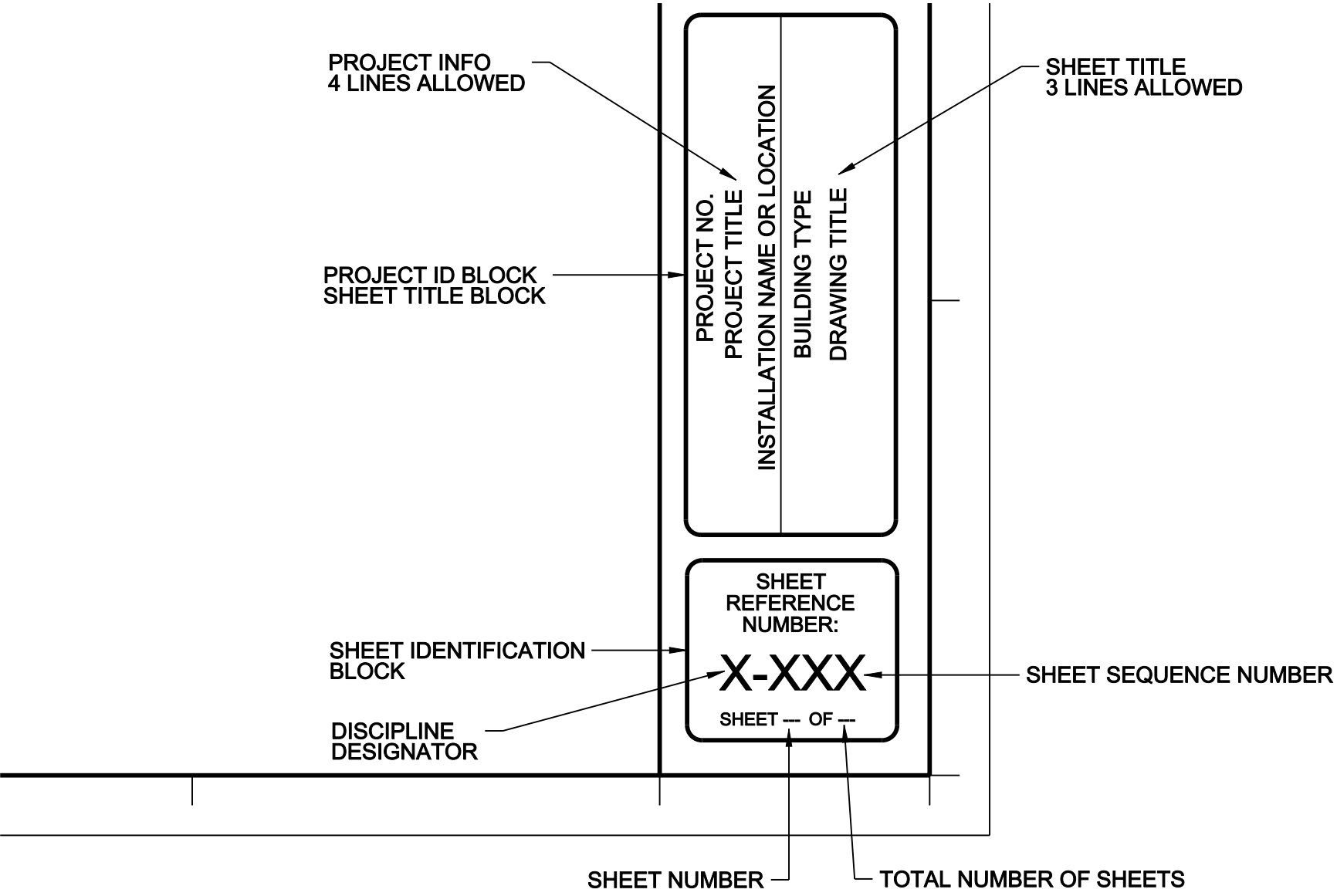


FIGURE 1 - AED TITLE BLOCK

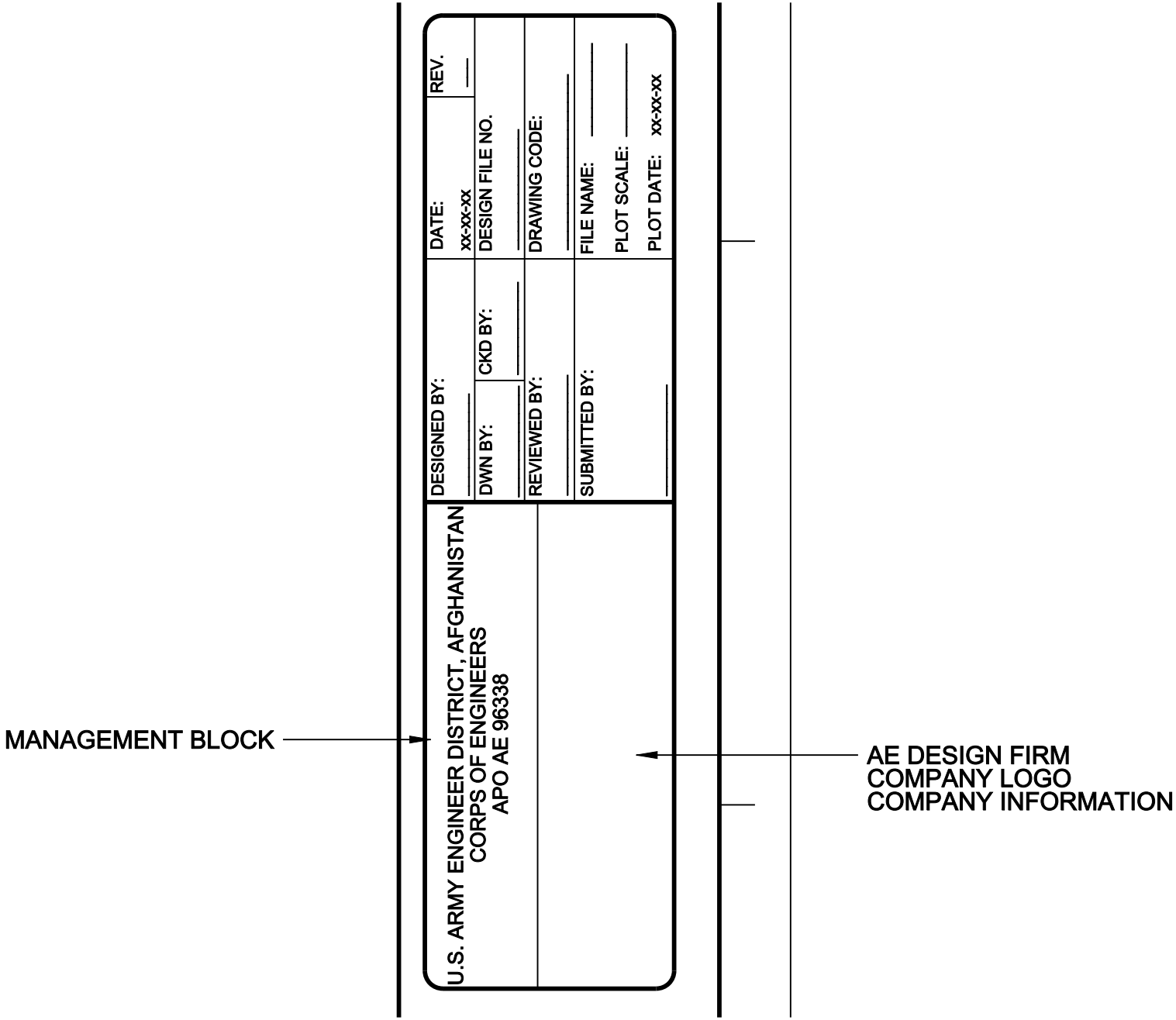


FIGURE 2 - AED MANAGEMENT BLOCK

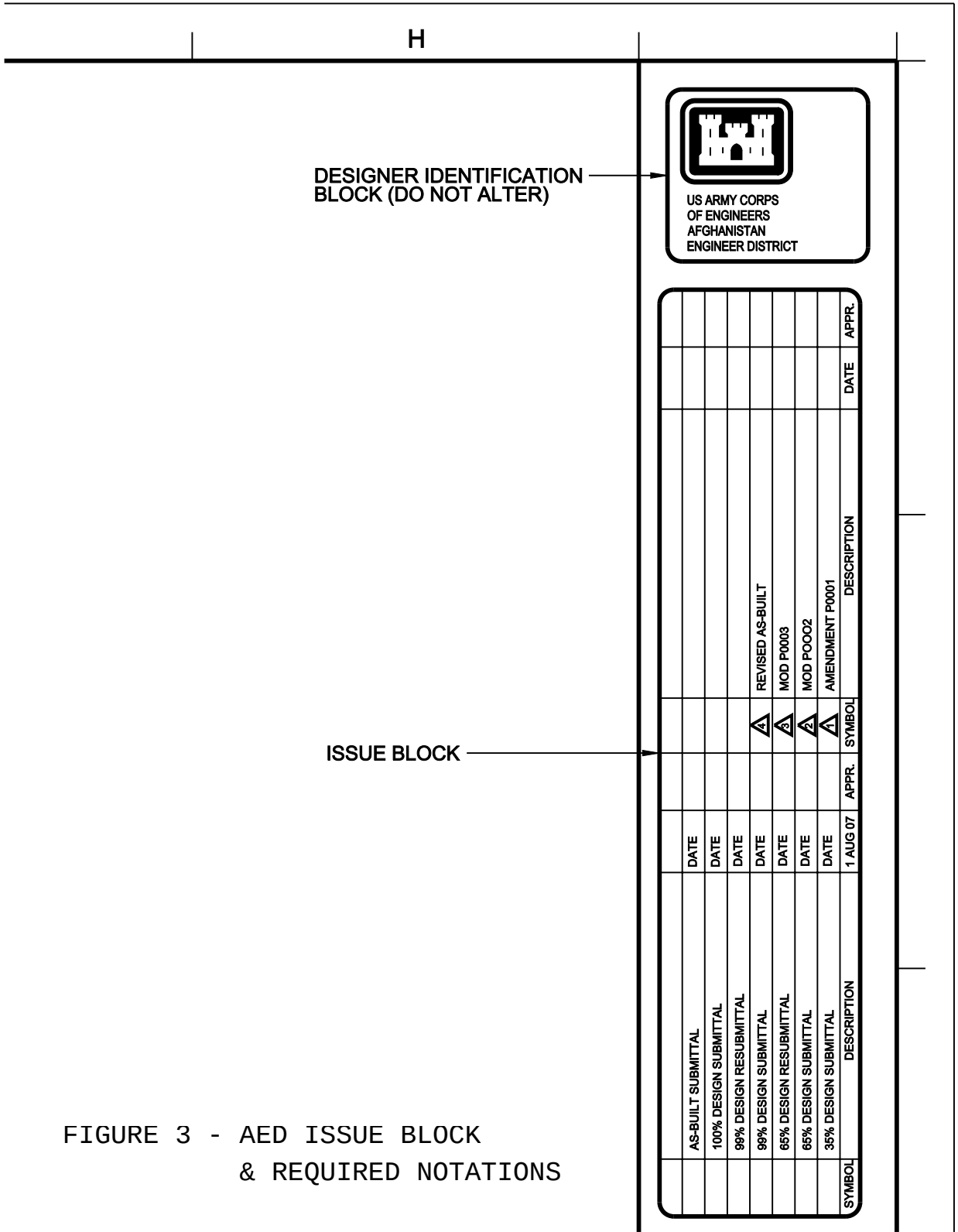


FIGURE 3 - AED ISSUE BLOCK
& REQUIRED NOTATIONS

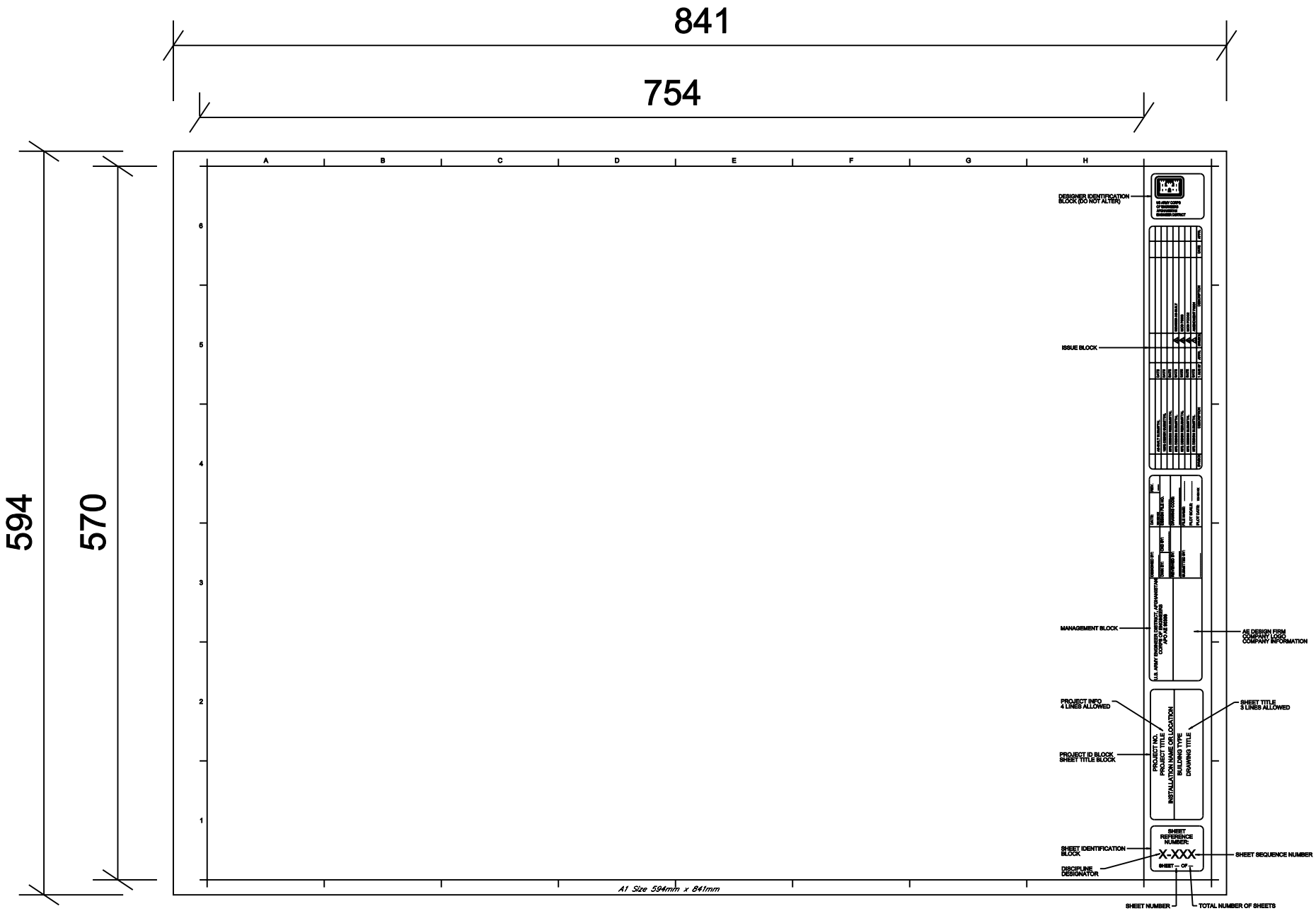


FIGURE 4 - BORDER SHEET SIZE

# Afghanistan National Police (ANP)

## District Headquarters Compounds

## 1 Story HQ

## Various Locations, Afghanistan

US Army Corps
of Engineers
Afghanistan Engineer District

4 February 2009

AF0607A–AR06

# DRAWING INDEX

| SHT.REF. NO. | FILE NO. | REVISIONS REV. NO. | REVISIONS AM/COP NO. | TITLE |
|---|---|---|---|---|
| | | | | **GENERAL** |
| G–1 | AF0607––GI01GN | | | DRAWING INDEX |
| | | | | **SITE DESIGN** |
| C–1 | AF0607––CI01PN | | | SITE PLAN |
| C–2 | AF0607––CI02DT | | | DETAILS |
| C–3 | AF0607––CI03DT | | | DETAILS |
| C–4 | AF0607––CI04DT | | | WELL HOUSE PLAN AND SECTION |
| C–5 | AF0607––CI05DT | | | SEPTIC TANK DETAILS |
| XM–1 | AF0607––MS01PN | | | MECHANICAL SITE PLAN |
| XE–1 | AF0607––ES01PN | | | ELECTRICAL SITE PLAN |
| | | | | **1 STORY BUILDING (A)** |
| A–1 | AF0607A–AR01PN | | | FIRST FLOOR PLAN |
| A–2 | AF0607A–AR02PN | | | ROOF PLAN |
| A–3 | AF0607A–AR03SE | | | BUILDING SECTIONS |
| A–4 | AF0607A–AR04SE | | | WALL SECTION |
| A–5 | AF0607A–AR05EL | | | BUILDING ELEVATIONS |
| A–6 | AF0607A–AR06EL | | | BUILDING ELEVATIONS |
| A–7 | AF0607A–AR07LS | | | ENLARGED TOILET PLANS |
| A–8 | AF0607A–AR08SC | | | DOOR SCHEDULE AND DOOR TYPES |
| A–9 | AF0607A–AR09SC | | | ROOM FINISH SCHEDULE |
| S–1 | AF0607A–SB01PN | | | FOUNDATION PLAN |
| S–2 | AF0607A–SB02PN | | | GRADE BEAM PLAN |
| S–3 | AF0607A–SB03PN | | | LOWER ROOF BEAM PLAN |
| S–4 | AF0607A–SB04PN | | | HIGH ROOF BEAM PLAN |
| S–5 | AF0607A–SB05DT | | | FOOTING AND COLUMN DETAILS |
| S–6 | AF0607A–SB06DT | | | BEAM DETAILS |
| S–7 | AF0607A–SB07DT | | | STANDARD BEAM AND COLUMN DETAILS |
| M–1 | AF0607A–MH01PN | | | HVAC PLAN |
| M–2 | AF0607A–MH02PN | | | HEATING PLAN |
| M–3 | AF0607A–MH03PN | | | ROOF PLAN |
| P–1 | AF0607A–MP01PN | | | PLUMBING PLAN |
| P–2 | AF0607A–MP02LS | | | ENLARGED PLUMBING PLANS –DOMESTIC WATER |
| P–3 | AF0607A–MP03LS | | | ENLARGED PLUMBING PLANS –WASTE AND DRAINS |
| P–4 | AF0607A–MP04LS | | | ENLARGED PLUMBING PLANS –WASTE AND DRAINS |
| P–5 | AF0607A–MP05DI | | | DOMESTIC WATER RISER DIAGRAM |
| P–6 | AF0607A–MP06SC | | | PLUMBING SCHEDULES |
| E–1 | AF0607A–EL01PN | | | LIGHTING PLAN |
| E–2 | AF0607A–EP02PN | | | POWER PLAN |
| E–3 | AF0607A–EC03PN | | | PANEL SCHEDULE |
| | | | | **GUARD TOWER (B)** |
| A–1 | AF0607B–AR01PN | | | FLOOR PLAN, SECTION ELEVATION AND ROOF PLAN |
| S–1 | AF0607B–SB01PN | | | FOUNDATION AND SLAB PLAN ROOF FRAMING PLAN |
| E–1 | AF0607B–EL01PN | | | LIGHTING & POWER PLAN |
| | | | | **GUARD SHACK (C)** |
| A–1 | AF0607C–AR01PN | | | FLOOR PLANS AND ELEVATIONS |
| S–1 | AF0607C–SB01PN | | | FOUNDATION AND SLAB PLAN ROOF FRAMING PLAN |
| E–1 | AF0607C–EL01PN | | | LIGHTING PLAN |
| | | | | **POWER PLANT (D)** |
| E–1 | AF0607D–EP01DI | | | ONE LINE DIAGRAM |
| | | | | **WELL HOUSE (E)** |
| A–1 | AF0607E–AR01PN | | | FLOOR PLAN, ELEVATIONS AND SCHEDULES |
| S–1 | AF0607E–SB01PN | | | FOUNDATION PLAN AND ROOF PLAN |
| S–2 | AF0607E–SB02DT | | | FOOTING DETAILS |
| S–3 | AF0607E–SF03DT | | | SLAB–ON–GRADE DETAILS |
| S–4 | AF0607E–SF04DT | | | ROOF BEAM AND STRUCTURAL SLAB DETAILS |
| M–1 | AF0607E–MH01PN | | | HVAC PLAN |
| E–1 | AF0607E–EL01PN | | | LIGHTING AND POWER PLAN |
| E–2 | AF0607E–EL02SC | | | ELECTRICAL SCHEDULES |

| SHT.REF. NO. | FILE NO. | REVISIONS REV. NO. | REVISIONS AM/COP NO. | TITLE |
|---|---|---|---|---|
| | | | | **STANDARD DETAILS** |
| SA–1 | AF0607$–AR01GN | | | ABBREVIATIONS AND SYMBOLS |
| SA–2 | AF0607$–AR02DT | | | WALL SECTION AND ROOF DETAILS |
| SS–1 | AF0607$–SB01GN | | | GENERAL NOTES AND ABBREVIATIONS |
| SS–2 | AF0607$–SB02DT | | | STANDARD DETAILS |
| SS–3 | AF0607$–SB03DT | | | DETAILS |
| SM–1 | AF0607$–MH01GN | | | LEGEND AND ABBREVIATIONS |
| SM–2 | AF0607$–MH02SC | | | MECHANICAL SCHEDULES |
| SM–3 | AF0607$–MH03DT | | | MECHANICAL STANDARD DETAILS |
| SP–1 | AF0607$–MP01GN | | | LEGENDS AND ABBREVIATIONS |
| SP–2 | AF0607$–MP02DT | | | STANDARD PLUMBING DETAILS |
| SP–3 | AF0607$–MP03DT | | | STANDARD PLUMBING DETAILS |
| SE–1 | AF0607$–EL01GN | | | LEGEND AND ABBREVIATIONS |
| SE–2 | AF0607$–EL02DT | | | STANDARD LIGHTING DETAILS |
| SE–3 | AF0607$–EL03DT | | | DUCTBANK DETAILS |
| SE–4 | AF0607$–EL04DT | | | STANDARD ELECTRICAL DETAILS |
| SE–5 | AF0607$–EL05DT | | | POWER PLANT DETAILS |
| SE–6 | AF0607$–EL06DT | | | HAND HOLE DETAILS |

| SYMBOL | DESCRIPTION | DATE | APP |
|---|---|---|---|

DESIGNED BY: DATE: 4 February 2009
DWN BY: SUBMITTED BY:
CHK BY: FILE NO.:

US Army Corps of Engineers
Afghanistan Engineer District

AFGHANISTAN NATIONAL POLICE (ANP) DISTRICT HEADQUARTERS COMPOUNDS – 1 STORY HQ
VARIOUS LOCATIONS, AFGHANISTAN

DRAWING INDEX

SHEET REFERENCE NUMBER:
G–1

$DATE$
$FILE$

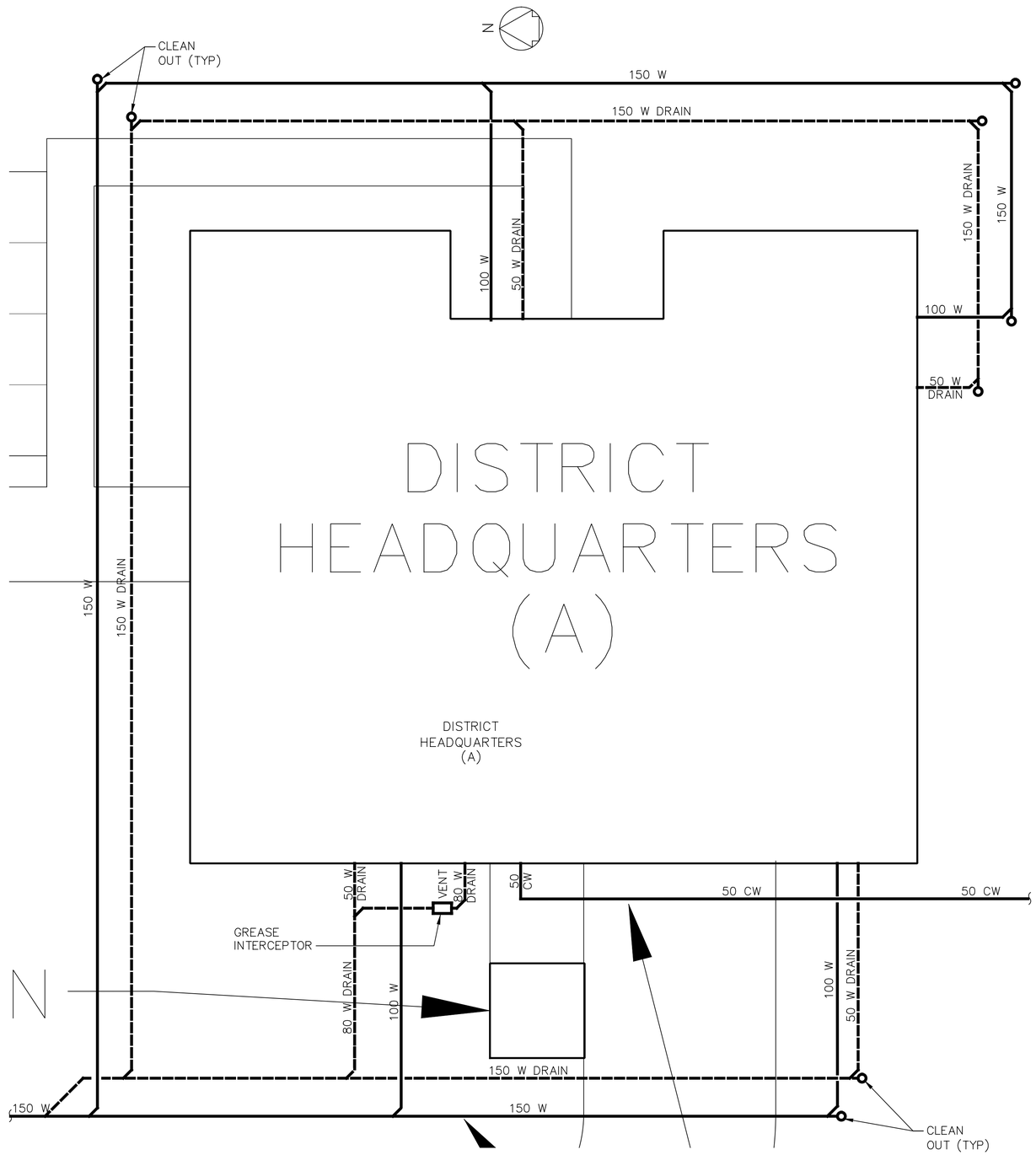


ENLARGED UTILITY SITE PLAN
SCALE= 1:100

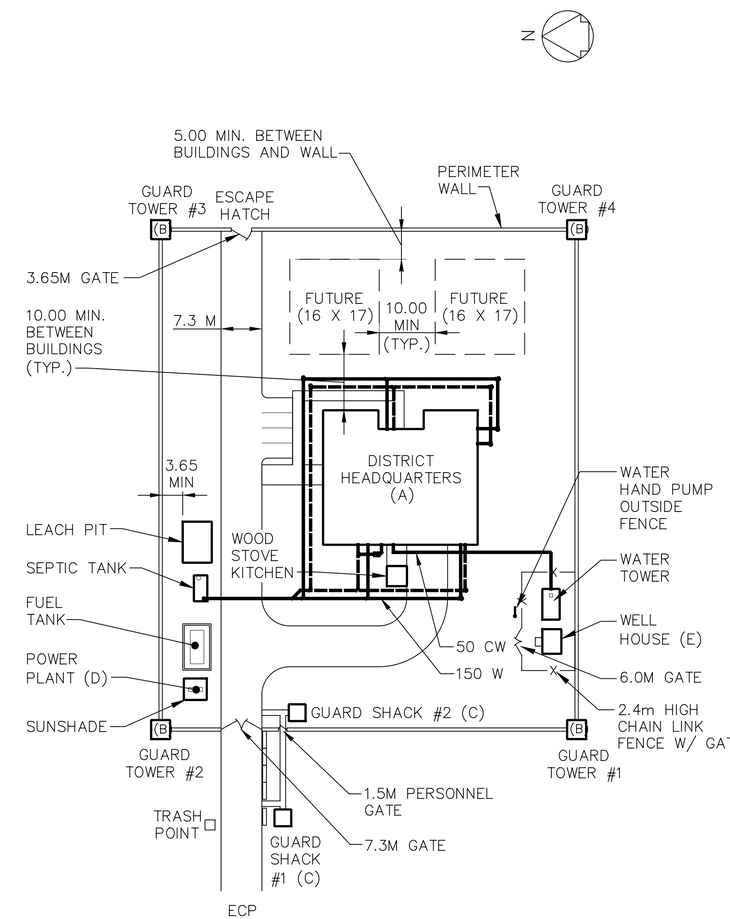


1:100

1:600

| SYMBOL | DESCRIPTION | DATE | APP |
|---|---|---|---|

DESIGNED BY: JLK
DATE: 4 February 2009
DWN BY: JLK
SUBMITTED BY:
CHK BY: JLK
FILE NO.: AF0607—C01PN

US Army Corps of Engineers
Afghanistan Engineer District

AFGHANISTAN NATIONAL POLICE (ANP) DISTRICT HEADQUARTERS COMPOUNDS – 1 STORY HQ
VARIOUS LOCATIONS, AFGHANISTAN
SITE DESIGN
SITE PLAN

SHEET REFERENCE NUMBER:
C–1

$DATE$
$FILE$

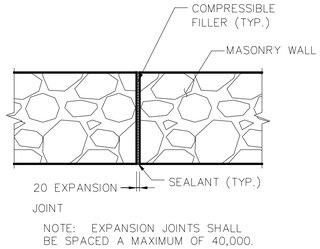


STONE WALL
EXPANSION JOINT DETAIL
NOT TO SCALE

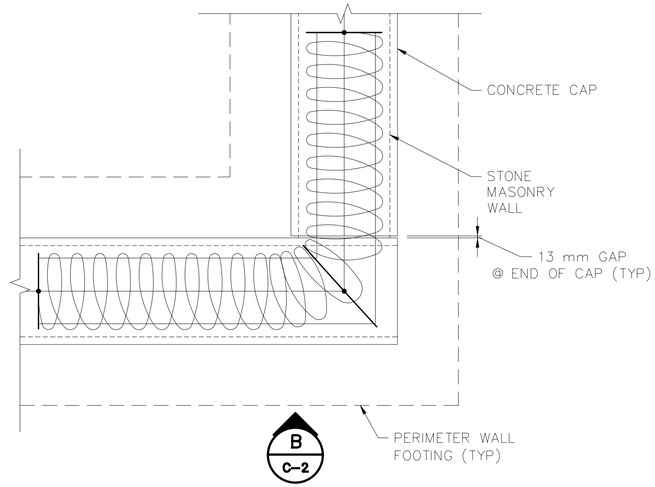


PERIMETER – STONE WALL CORNER – PLAN
(END CONDITION SIMILAR)
NOT TO SCALE

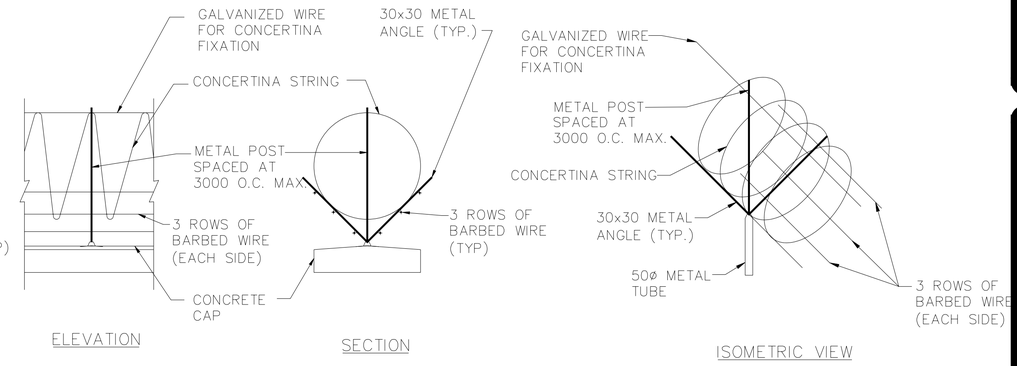


CONCERTINA STRING & BARBED WIRE DETAILS
NOT TO SCALE

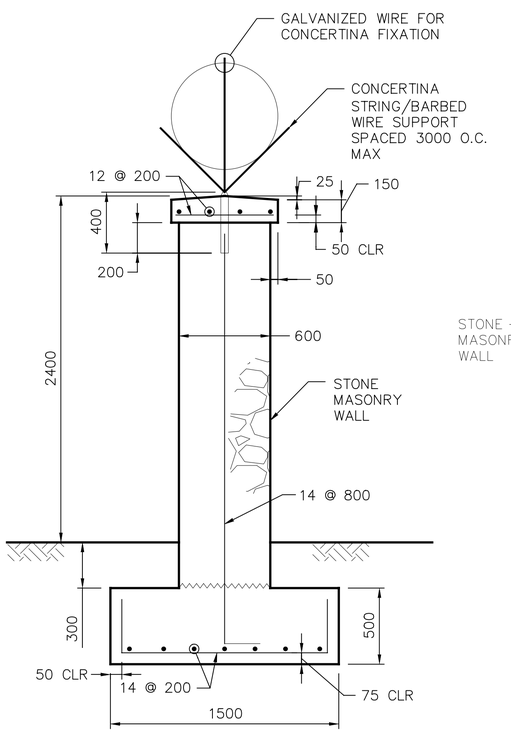


SECTION
SCALE=NO SCALE
A
C-2 C-2

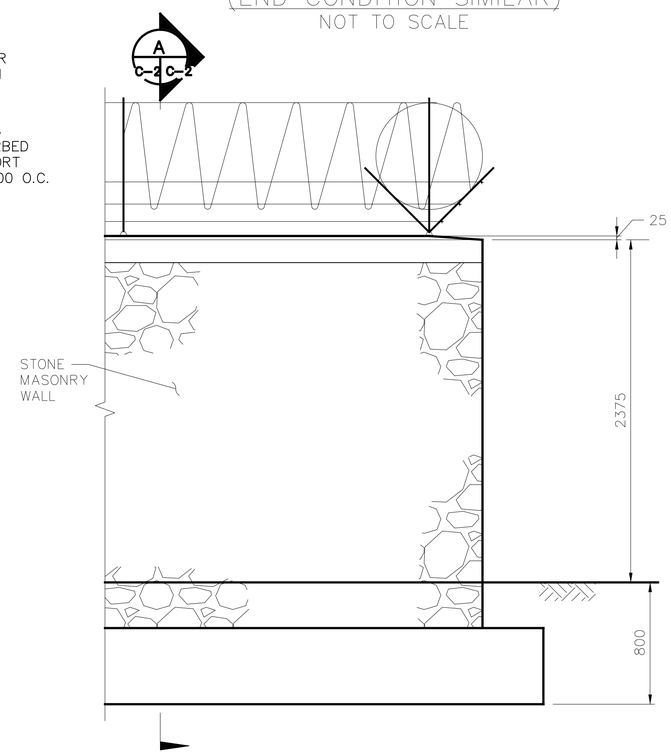


ELEVATION
SCALE=NO SCALE
B
C-2 C-2

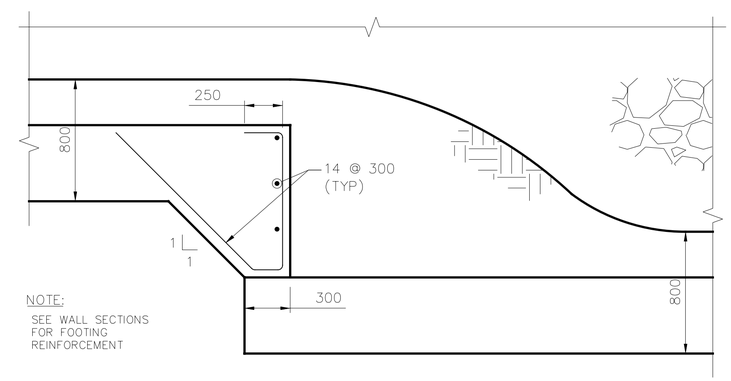


NOTE:
SEE WALL SECTIONS FOR FOOTING REINFORCEMENT

STEPPED FOOTING DETAIL FOR
GRADE CHANGE GREATER THAN 15 DEGREES
NOT TO SCALE

UNLESS OTHERWISE NOTED, LINEAR DIMENSIONS SHOWN ARE IN MILLIMETERS.

| SYMBOL | DESCRIPTION | DATE | APP |
|---|---|---|---|

DESIGNED BY: MW
DATE: 4 February 2009
DWN BY: TSR
SUBMITTED BY:
CHK BY: REK
FILE NO.: AF0807-C102DT

US Army Corps of Engineers
Afghanistan Engineer District

AFGHANISTAN NATIONAL POLICE (ANP) DISTRICT HEADQUARTERS COMPOUNDS – 1 STORY HQ
VARIOUS LOCATIONS, AFGHANISTAN
SITE DESIGN
DETAILS

SHEET REFERENCE NUMBER:
C–2

$DATE$
$FILE$

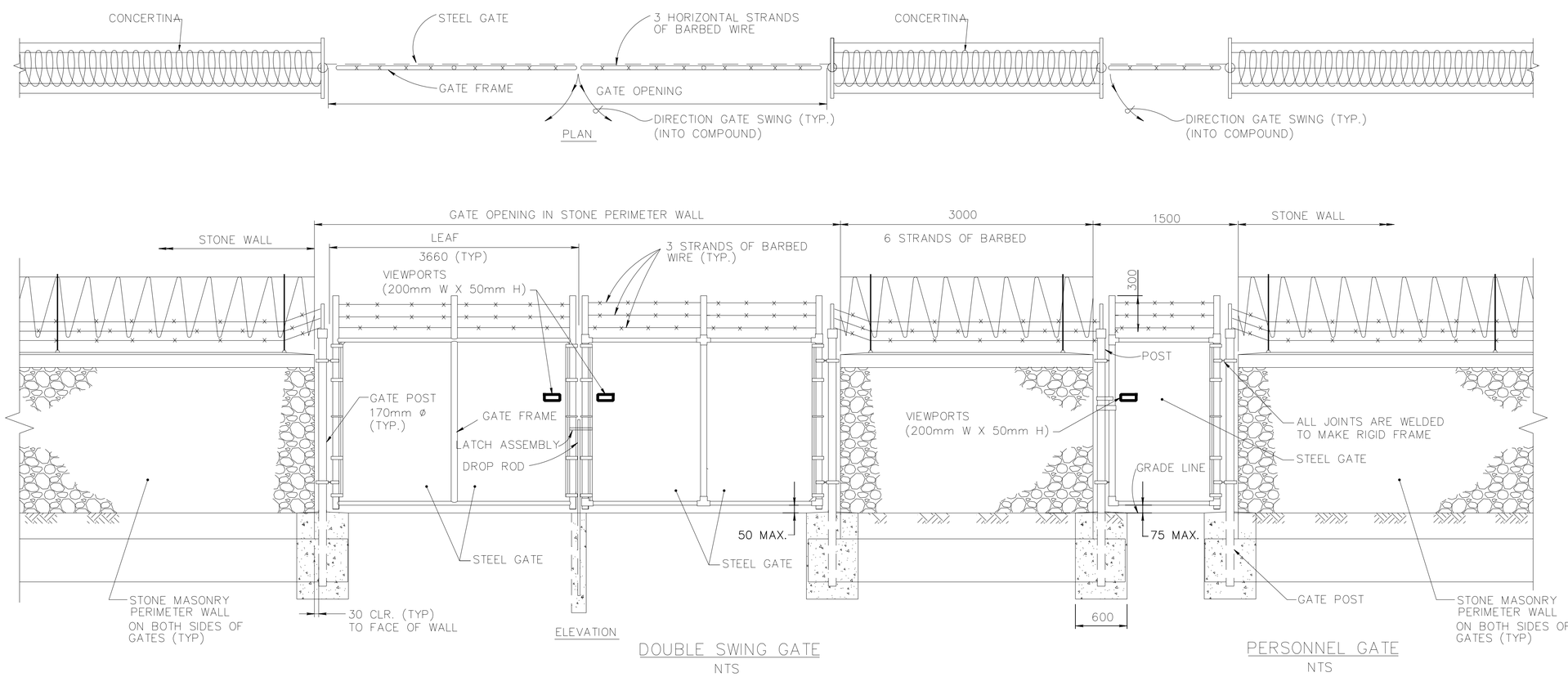


DOUBLE SWING GATE
NTS

PERSONNEL GATE
NTS

UNLESS OTHERWISE NOTED, LINEAR DIMENSIONS SHOWN ARE IN MILLIMETERS.

| SYMBOL | DESCRIPTION | DATE | APP |
|---|---|---|---|

DESIGNED BY: MW
DATE: 4 February 2009
DWN BY: TSR
SUBMITTED BY:
CHK BY: REK
FILE NO.: AF0807-C1030T

US Army Corps of Engineers
Afghanistan Engineer District

AFGHANISTAN NATIONAL POLICE (ANP) DISTRICT HEADQUARTERS COMPOUNDS – 1 STORY HQ
VARIOUS LOCATIONS, AFGHANISTAN
SITE DESIGN
DETAILS

SHEET REFERENCE NUMBER:
C–3

$DATE$
$FILE$

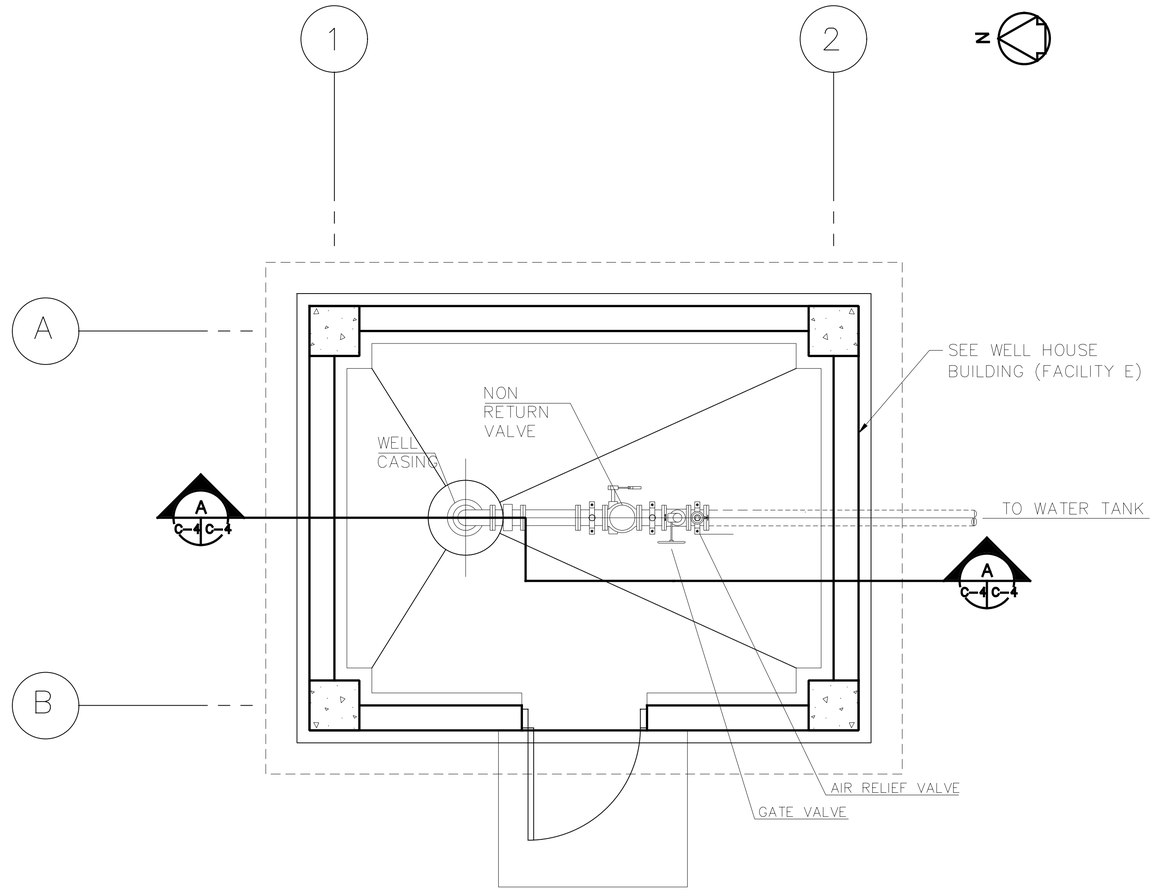


FLOOR PLAN
NOT TO SCALE

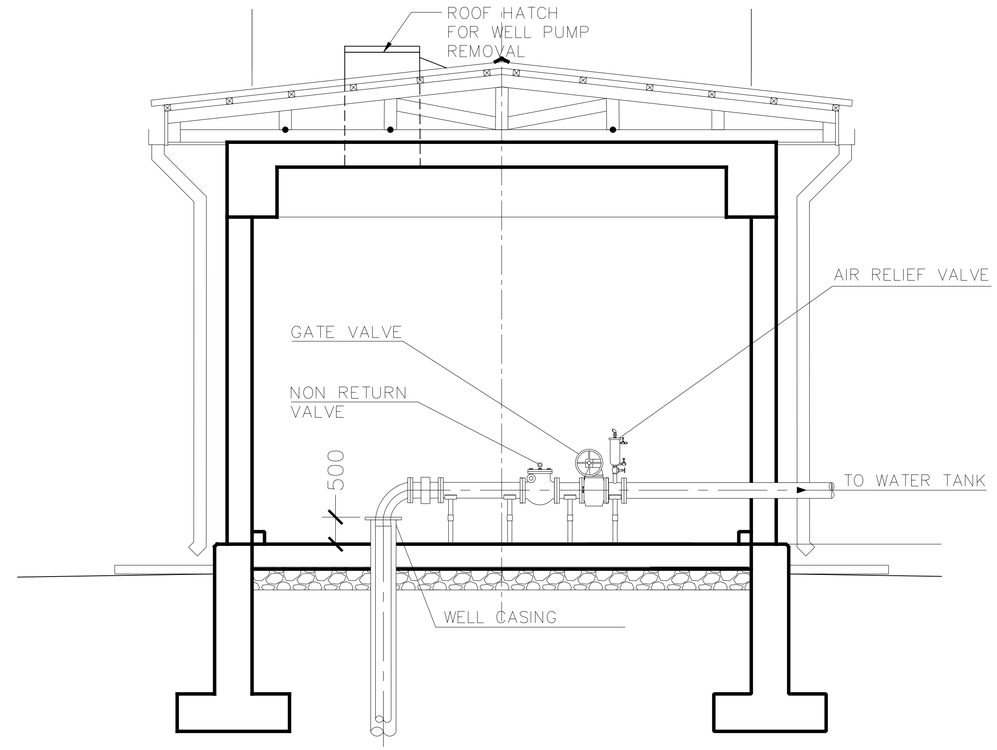


A C-4 C-4 BUILDING SECTION
NOT TO SCALE

UNLESS OTHERWISE NOTED, LINEAR DIMENSIONS SHOWN ARE IN MILLIMETERS.

| SYMBOL | DESCRIPTION | DATE | APP |
|---|---|---|---|

DESIGNED BY: MW
DATE: 4 February 2009
DWN BY: TSR
SUBMITTED BY:
CHK BY: REK
FILE NO.: AF0807-C104DT

US Army Corps of Engineers
Afghanistan Engineer District

AFGHANISTAN NATIONAL POLICE (ANP) DISTRICT HEADQUARTERS COMPOUNDS – 1 STORY HQ
VARIOUS LOCATIONS, AFGHANISTAN
SITE DESIGN
WELL HOUSE PLAN AND SECTION

SHEET REFERENCE NUMBER:
C-4

$DATE$
$FILE$

NOTE:
1.? SEE CIVIL SITE PLAN FOR ORIENTATION OF INLET AND OUTLET CONNECTIONS.

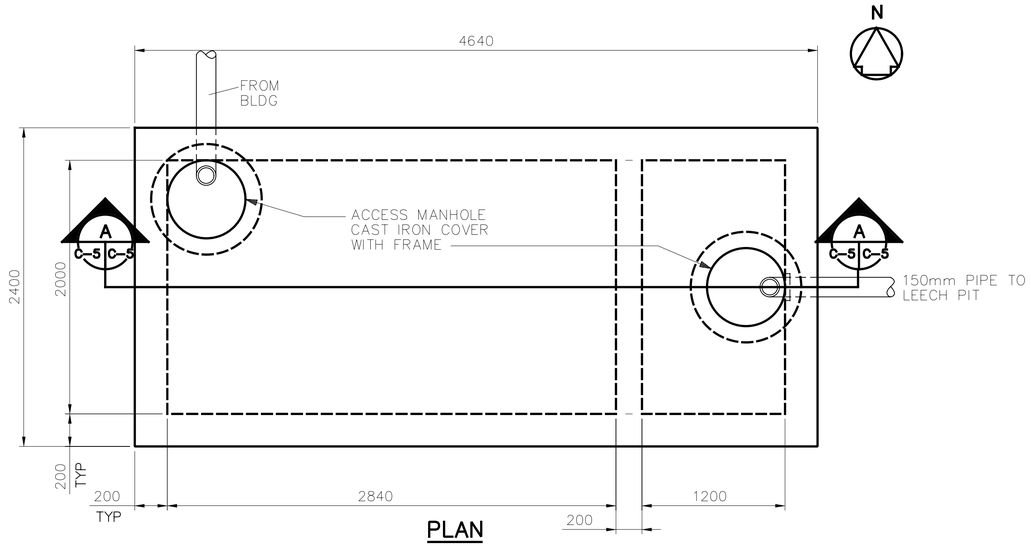


PLAN

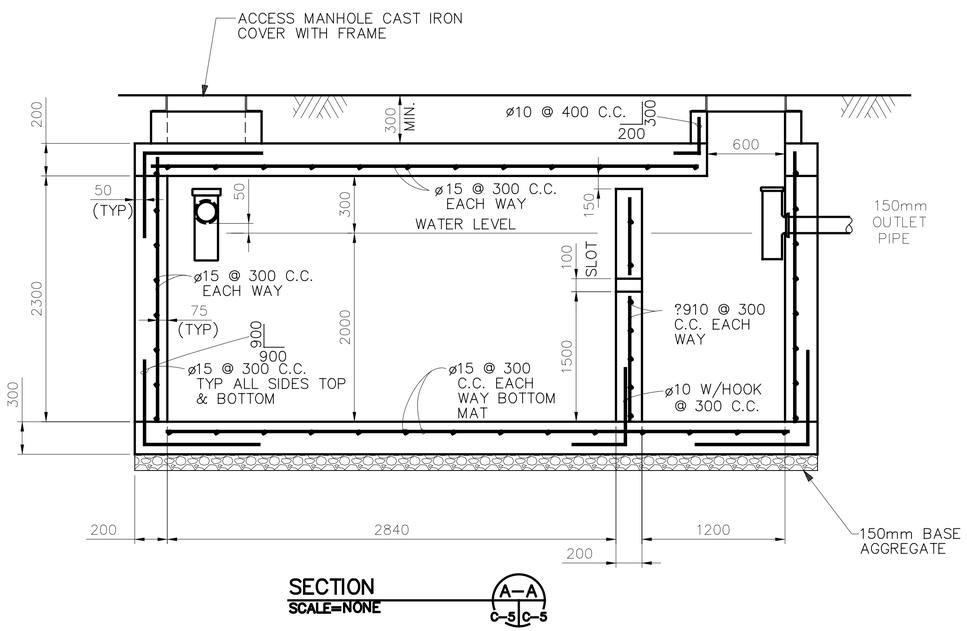


SECTION A–A (C-5 | C-5)
SCALE=NONE

# CONCRETE SEPTIC TANK DETAILS

NOT TO SCALE

UNLESS OTHERWISE NOTED, LINEAR DIMENSIONS SHOWN ARE IN MILLIMETERS.

| SYMBOL | DESCRIPTION | DATE | APP |
|---|---|---|---|

DESIGNED BY: MW
DATE: 4 February 2009
DWN BY: TSR
SUBMITTED BY:
CHK BY: REK
FILE NO.: AF0607-C005T

US Army Corps of Engineers
Afghanistan Engineer District

AFGHANISTAN NATIONAL POLICE (ANP) DISTRICT HEADQUARTERS COMPOUNDS – 1 STORY HQ
VARIOUS LOCATIONS, AFGHANISTAN
SITE DESIGN
SEPTIC TANK DETAILS

SHEET REFERENCE NUMBER:
C–5

$DATE$
$FILE$

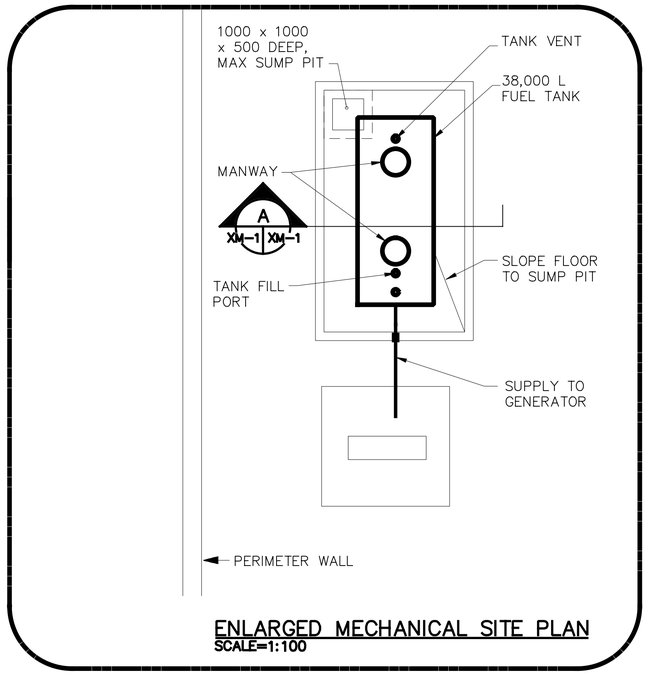


ENLARGED MECHANICAL SITE PLAN
SCALE=1:100

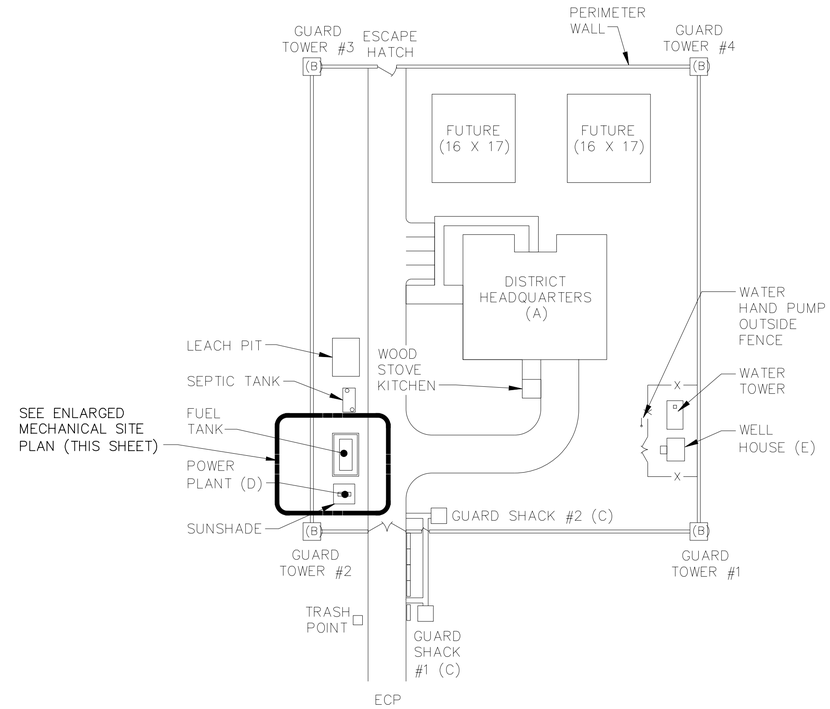


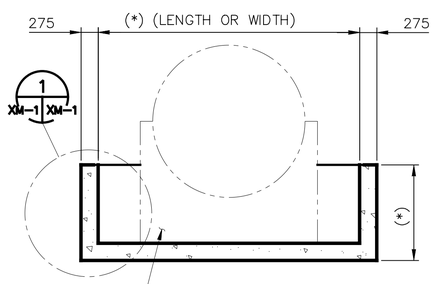


SEE SPEC FOR
SADDLE
REQUIREMENTS

(*) – COORDINATE LENGTH, WIDTH, AND HEIGHT OF CONTAINMENT DIKE WITH TANK REQUIREMENTS. HEIGHT OF WALL IS TO BE DETERMINED BASED ON SPECIFICATION 01015. FOR HEIGHTS GREATER THAN 1000mm, REINFORCEMENT SHOWN REQUIRES VERIFICATION BY ENGINEER.

SECTION A–A
SCALE=1:50
XM-1 XM-1

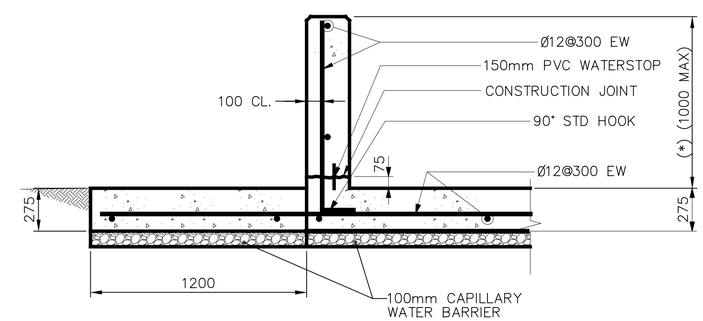


CONTAINMENT
WALL DETAIL
SCALE= NO SCALE
1
XM-1 XM-1

MECHANICAL SITE PLAN
SCALE= 1:600

1:50 1:100 1:600

| SYMBOL | DESCRIPTION | DATE | APP |
|---|---|---|---|

DESIGNED BY: JJK
DATE: 4 February 2009
DWN BY: JJK
SUBMITTED BY:
CHK BY: JJK
FILE NO.: AF0807—MS01PN

US Army Corps of Engineers
Afghanistan Engineer District

AFGHANISTAN NATIONAL POLICE (ANP) DISTRICT HEADQUARTERS COMPOUNDS – 1 STORY HQ
VARIOUS LOCATIONS, AFGHANISTAN
SITE DESIGN
MECHANICAL SITE PLAN

SHEET REFERENCE NUMBER:
XM–1

$DATE$
$FILE$

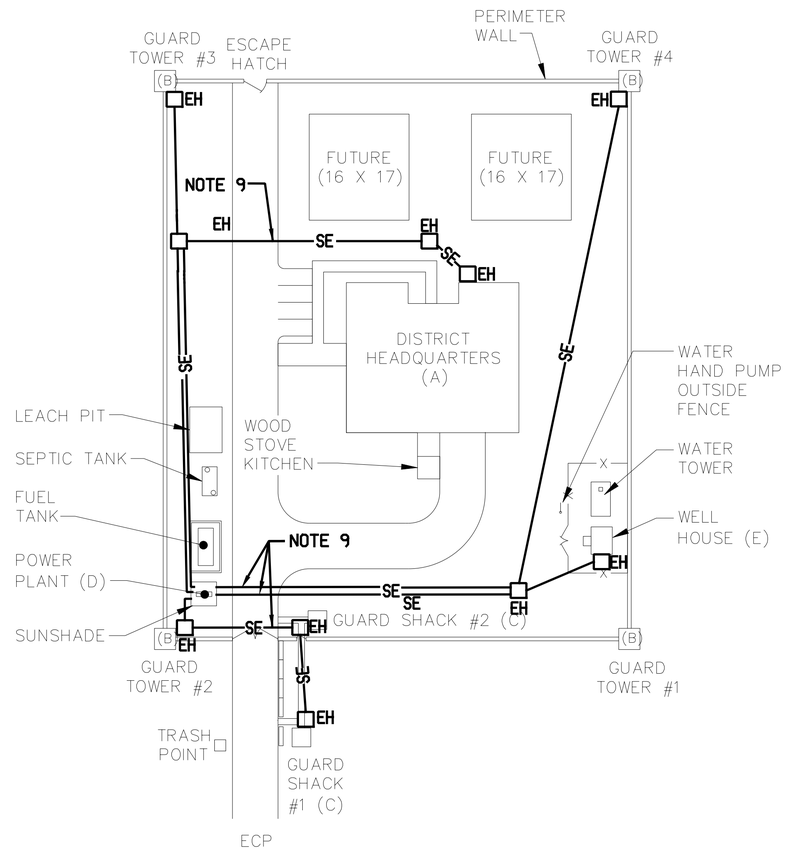


## ELECTRICAL SITE PLAN

SCALE= 1:500Ø

NOTES:

1. FOR LEGENDS AND ABBREVIATIONS SEE PLATE SE–1.
2. FOR SECONDARY DISTRIBUTION DIRECT BURIED (DB) DUCT DETAILS AND GENERATOR POWER PLANT DETAILS SEE PLATES SE–4 AND SE–5.
3. FOR ELECTRICAL HAND HOLE (EH) SEE PLATE SE–6.
4. FOR POWER PLANT ONE LINE DIAGRAM SEE PLATE D/E–1, POWER PLANT.
5. ALL SECONDARY DISTRIBUTION CABLES SHALL BE RACKED ON THE SIDES OF EH. SEE DETAIL ON PLATE SE–4.
6. ALL DIRECT BURIED PVC CONDUIT 90 DEGREE BENDS SHALL HAVE A RADIUS OF NOT LESS THAN 92mm, OR NOT LESS THAN THE CABLE MANUFACTURER'S RECOMMENDED CABLE BENDING RADIUS, WHICH EVER BEND RADIUS IS LARGER.
7. ALL CABLE SPLICES SHALL BE MADE IN AN EH AND IN ACCORDANCE WITH THE CABLE MANUFACTURER'S RECOMMENDATIONS.
8. COORDINATE ROUTING OF SECONDARY SERVICES AS NECESSARY TO AVOID FACILITIES AND STRUCTURES.
9. PROVIDE CONCRETE ENCASED DUCT BANK UNDER TRAFFIC AREAS.

10 0 10 20 30 40 50
1:500

UNLESS OTHERWISE NOTED, LINEAR DIMENSIONS SHOWN ARE IN MILLIMETERS.

| SYMBOL | DESCRIPTION | DATE | APP |
|---|---|---|---|

DESIGNED BY: JJK
DWN BY: JJK
CHK BY: JJK
DATE: 4 February 2009
SUBMITTED BY:
FILE NO.: AF0807---ES01PN

US Army Corps of Engineers
Afghanistan Engineer District

AFGHANISTAN NATIONAL POLICE (ANP) DISTRICT HEADQUARTERS COMPOUNDS – 1 STORY HQ
VARIOUS LOCATIONS, AFGHANISTAN
SITE DESIGN
ELECTRICAL SITE PLAN

SHEET REFERENCE NUMBER:
XE–1

$DATE$
$FILE$

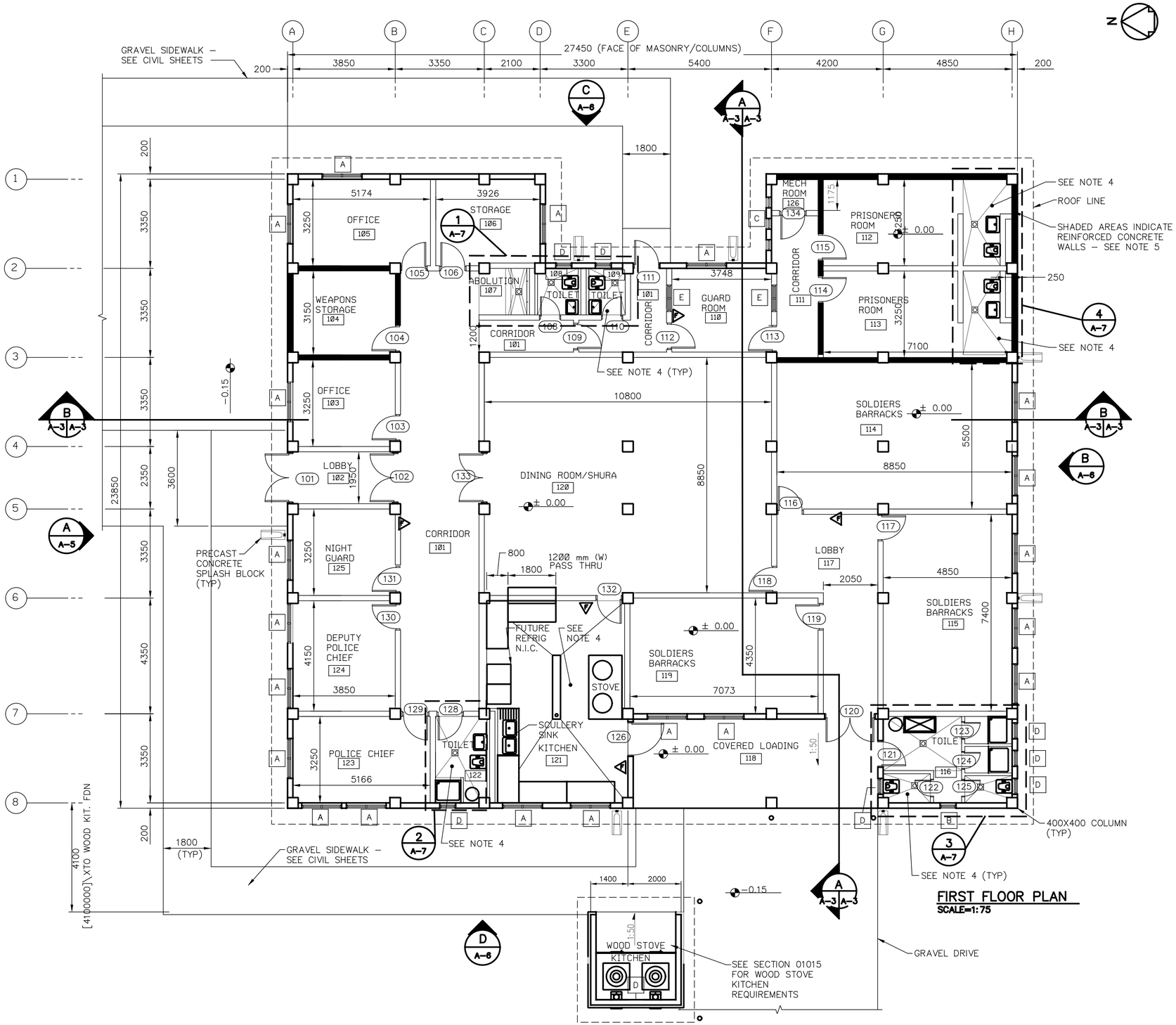


FIRST FLOOR PLAN
SCALE=1:75

GENERAL NOTES:

1. PROVIDE PORTABLE FIRE EXTINGUISHERS, ABC DRY CHEMICAL 4A:60B:C

2. ALL INTERIOR WALLS SHALL BE 200 mm THICK BRICK MASONRY AND SHALL EXTEND TO THE BOTTOM OF STRUCTURE ABOVE AND CENTER ON COLUMNS UNLESS NOTED OTHERWISE.

3. TOILET AND SHOWER PARTITIONS SHALL BE 2200mm HIGH.

4. SLOPE FLOORS IN KITCHENS AND TOILET/SHOWER AREAS 1:50 MINIMUM TO TRENCH DRAINS AND FLOOR DRAINS WHERE INDICATED. SLOPE TRENCH DRAINS 1:50 TO DRAIN AT ONE END. SEE ENLARGED ARCHITECTURAL DRAWINGS, PLUMBING DRAWINGS, AND STRUCTURAL DRAWINGS.

5. INTERIOR AND EXTERIOR WALLS AROUND PRISONERS ROOMS AND WEAPONS STORAGE, AS INDICATED BY SHADING, SHALL BE 200mm THICK REINFORCED CONCRETE – SEE STRUCTURAL FOR DETAILS.

6. ALL CORRIDOR DOORS ARE 20 MINUTE FIRE RATED.

7. PROVIDE PROPANE STORAGE AREA TO INCLUDE CONCRETE SLAB, PROTECTIVE WALL WEATHER SHELTER AND CHAIN LINK FENCING

UNLESS OTHERWISE NOTED, LINEAR DIMENSIONS SHOWN ARE IN MILLIMETERS.

| SYMBOL | DESCRIPTION | DATE | APP |
|---|---|---|---|
| | VARIOUS REVISIONS | 29 JAN 09 | |

DESIGNED BY: JJK
DWN BY: JJK
CHK BY: JJK
DATE: 4 February 2009
SUBMITTED BY:
FILE NO.: AF0607A-AR01PN

US Army Corps of Engineers
Afghanistan Engineer District

AFGHANISTAN NATIONAL POLICE (ANP) DISTRICT HEADQUARTERS COMPOUNDS – 1 STORY HQ
VARIOUS LOCATIONS, AFGHANISTAN
1 STORY BUILDING
FIRST FLOOR PLAN

SHEET REFERENCE NUMBER:
A
A–1

$DATE$
$FILE$

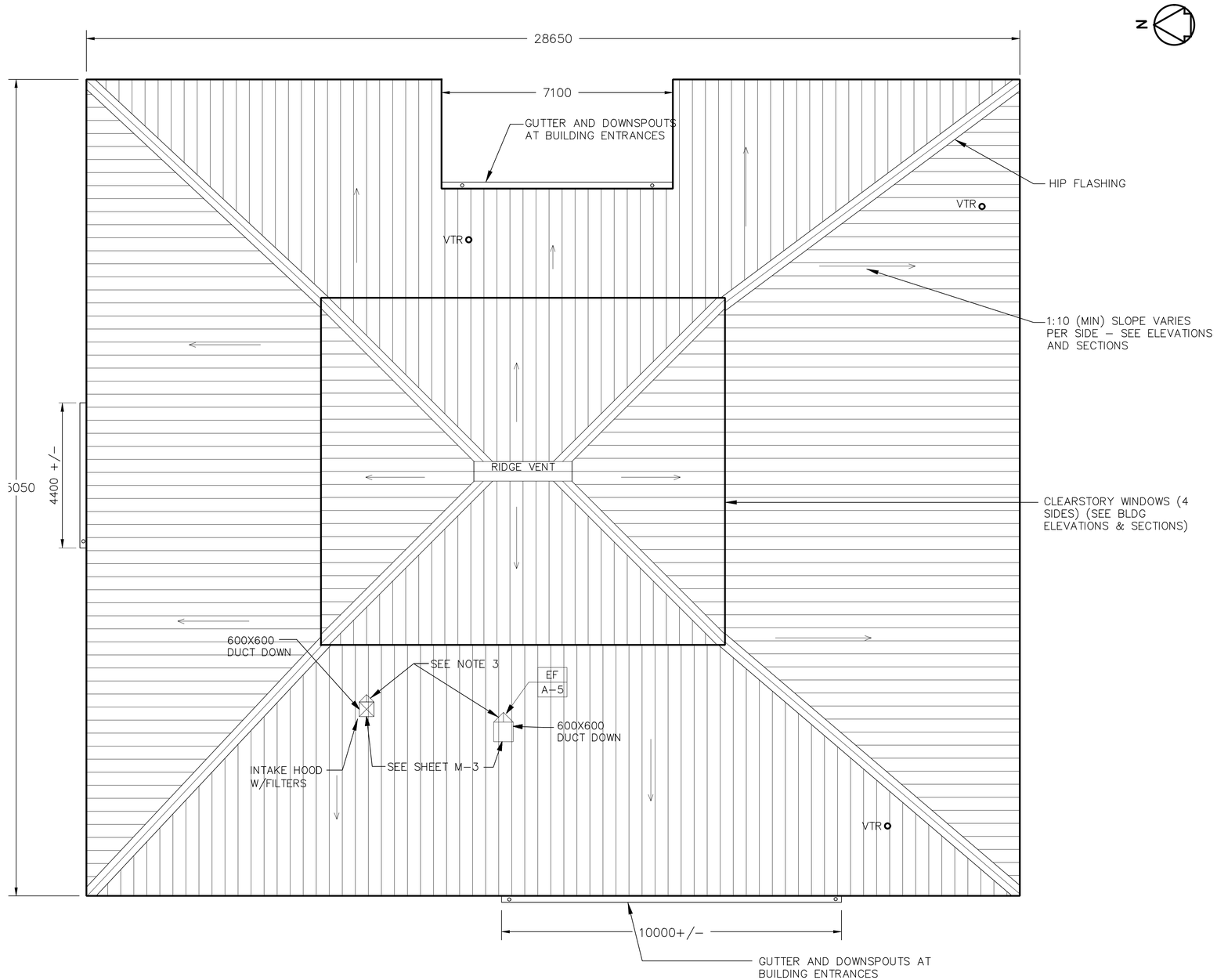


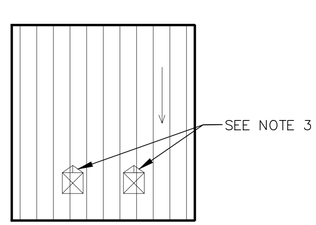


ROOF PLAN

SCALE= 1:75

NOTE:

1. TYPICAL ROOF SLOPE IS 1 IN 10.

2. ALL ROOF PENETRATIONS SHALL BE PROPERLY FLASHED AND SEALED WEATHER TIGHT.

3. PROVIDE WATER TIGHT SHEET METAL CRICKETS, FLASHING AND SEALANT PER ROOFING MANUFACTURERS RECOMMENDATIONS AT EACH PENETRATION. ALIGN STANDING SEAMS WITH FLASHING AT CRICKETS SUCH THAT WATER IS DIVERTED AROUND PENETRATIONS.

4. ROOF DIMENSIONS IN METERS AS SHOWN

5. EXHAUST STACK FOR KITCHEN STOVE MUST MIN 1020 mm ABOVE ROOF LINE.

3 1.50 0 3 4.5
1:75

UNLESS OTHERWISE NOTED, LINEAR DIMENSIONS SHOWN ARE IN MILLIMETERS.

| SYMBOL | DESCRIPTION | DATE | APP |
|---|---|---|---|

DESIGNED BY: JLK
DATE: 4 February 2009
DWN BY: JLK
SUBMITTED BY:
CHK BY: JLK
FILE NO.: AF0807A–AR02PN

US Army Corps of Engineers
Afghanistan Engineer District

AFGHANISTAN NATIONAL POLICE (ANP) DISTRICT HEADQUARTERS COMPOUNDS – 1 STORY HQ
VARIOUS LOCATIONS, AFGHANISTAN
1 STORY BUILDING
ROOF PLAN

SHEET REFERENCE NUMBER:
A
A–2

$DATE$
$FILE$

GENERAL NOTES:
1. UNLESS NOTED OTHERWISE, ELEVATIONS ARE SHOWN IN METERS ABOVE OR BELOW FINISHED FLOOR.

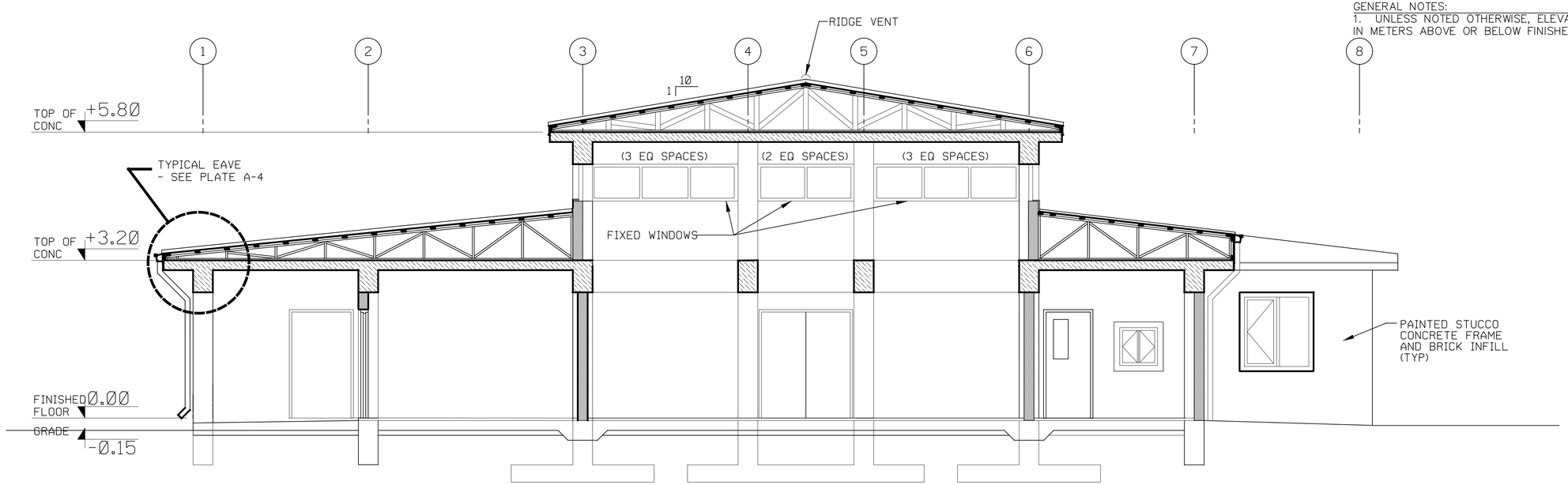


BUILDING SECTION A-A (A-1 / A-3)
SCALE=1:50

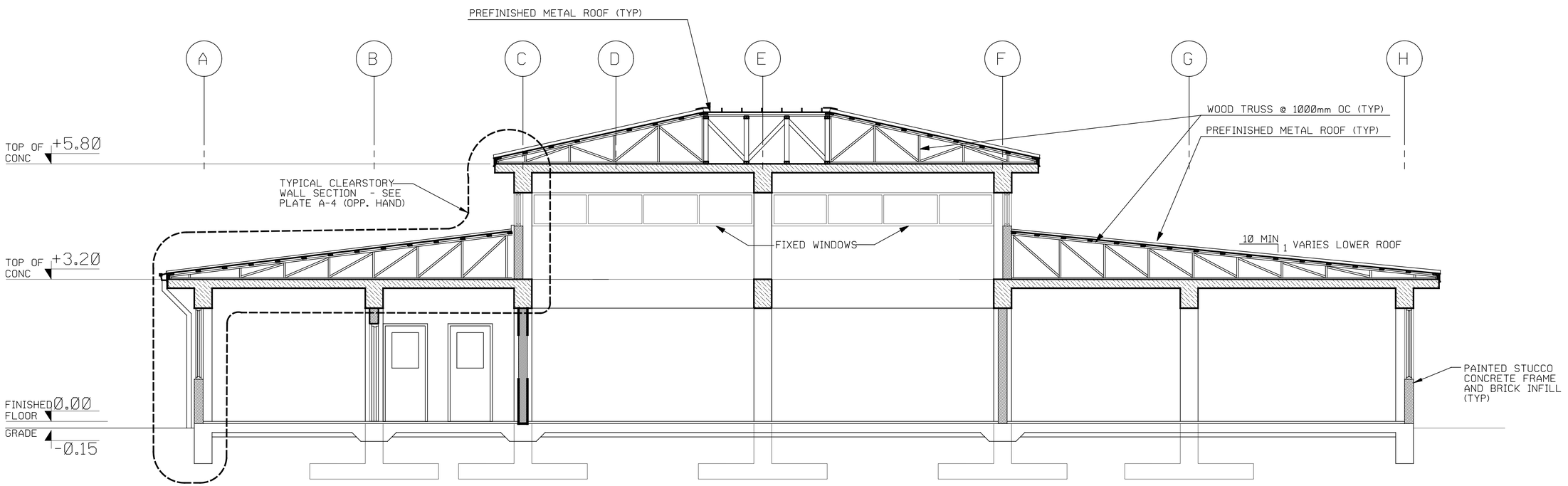


BUILDING SECTION B-B (A-1 / A-3)
SCALE=1:50

1 0 1 2 3 4
1:50

UNLESS OTHERWISE NOTED, LINEAR DIMENSIONS SHOWN ARE IN MILLIMETERS.

| SYMBOL | DESCRIPTION | DATE | APP |
|---|---|---|---|

DESIGNED BY: J.K
DWN BY: J.K
CHK BY: J.K
DATE: 4 February 2009
SUBMITTED BY:
FILE NO.: AF0807A-AR03SE

US Army Corps of Engineers
Afghanistan Engineer District

AFGHANISTAN NATIONAL POLICE (ANP) DISTRICT HEADQUARTERS COMPOUNDS – 1 STORY HQ
VARIOUS LOCATIONS, AFGHANISTAN
1 STORY BUILDING
BUILDING SECTIONS

SHEET REFERENCE NUMBER:
A
A–3

$DATE$
$FILE$

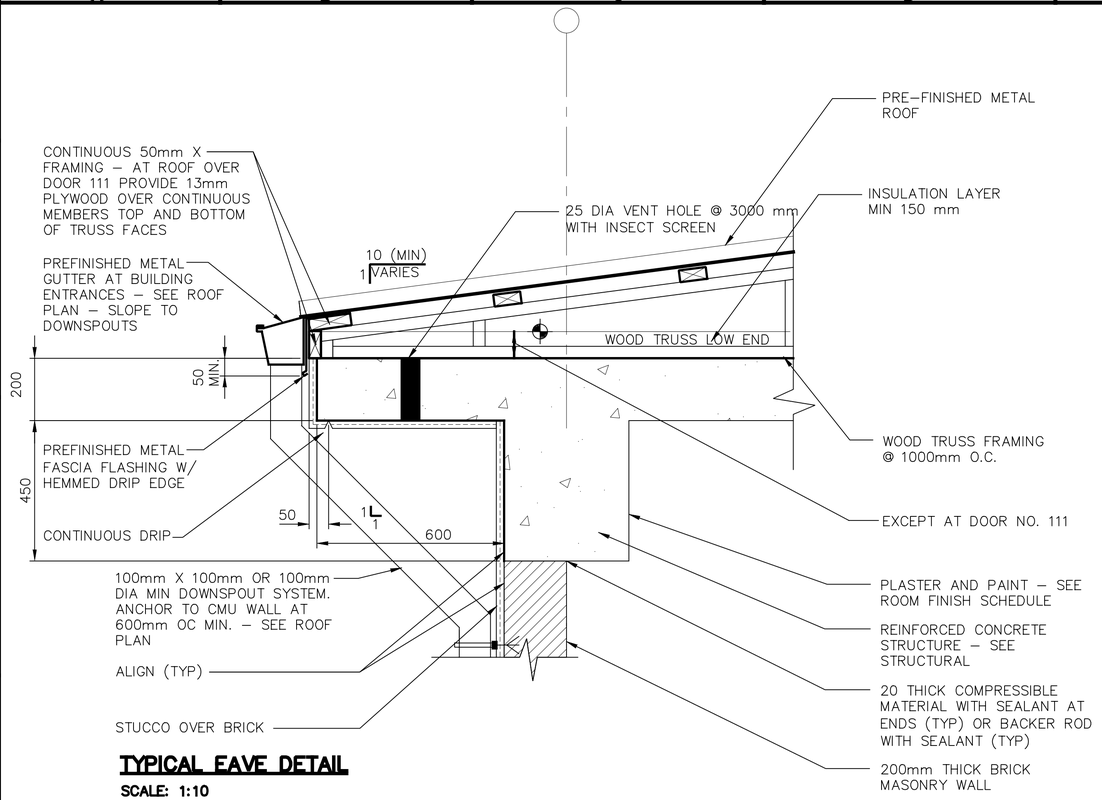


**TYPICAL EAVE DETAIL**
SCALE: 1:10

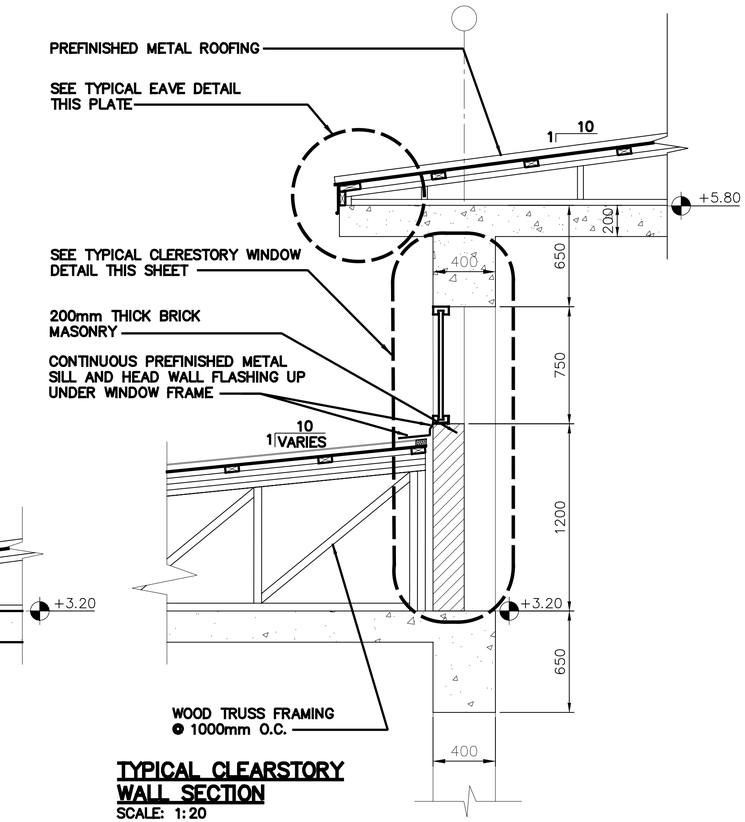


**TYPICAL CLEARSTORY WALL SECTION**
SCALE: 1:20

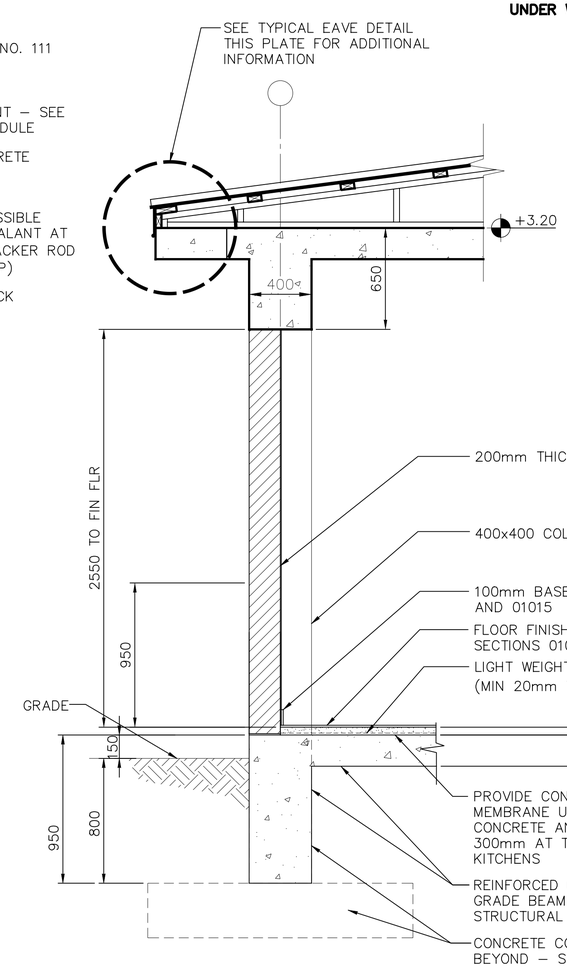


**TYPICAL WALL SECTION**
SCALE: 1:20

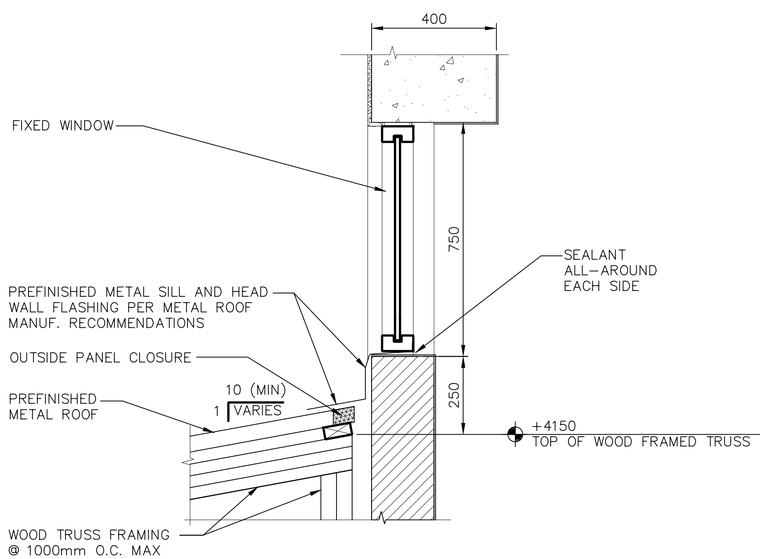


**TYPICAL CLERESTORY WINDOW DETAIL**
SCALE: 1:10

0 .50 1.00
1:10

1 .50 0 1
1:20

UNLESS OTHERWISE NOTED, LINEAR DIMENSIONS SHOWN ARE IN MILLIMETERS.

| SYMBOL | DESCRIPTION | DATE | APP |
|---|---|---|---|

DESIGNED BY: JJK
DATE: 4 February 2009
DWN BY: JJK
SUBMITTED BY:
CHK BY: JJK
FILE NO.: AF0807A–AR04SE

US Army Corps of Engineers
Afghanistan Engineer District

AFGHANISTAN NATIONAL POLICE (ANP) DISTRICT HEADQUARTERS COMPOUNDS – 1 STORY HQ
VARIOUS LOCATIONS, AFGHANISTAN
1 STORY BUILDING
WALL SECTION

SHEET REFERENCE NUMBER:
A
A–4

$DATE$
$FILE$

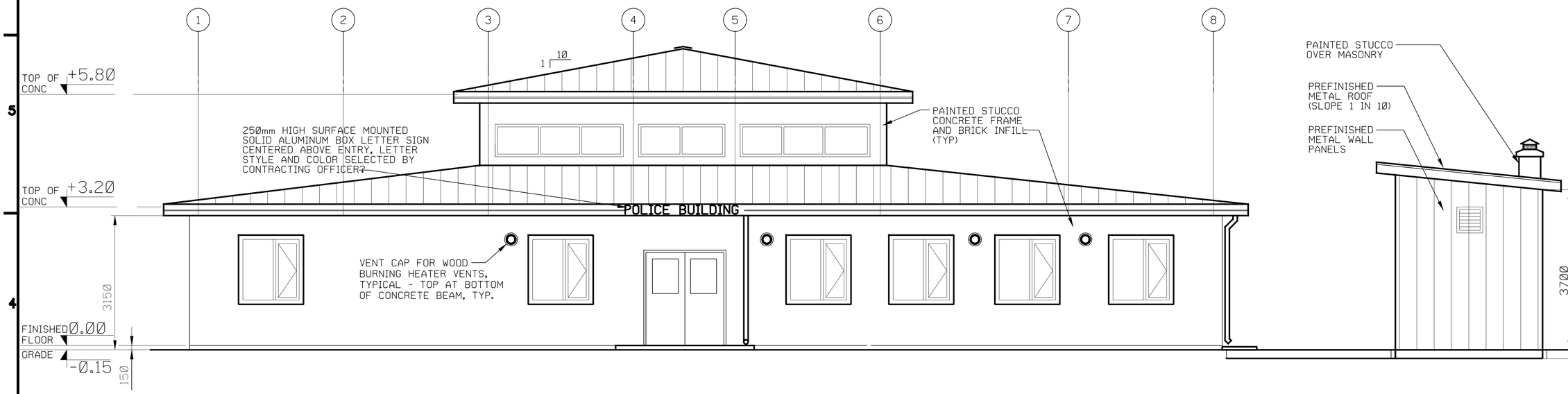


NORTH ELEVATION
SCALE=1:50

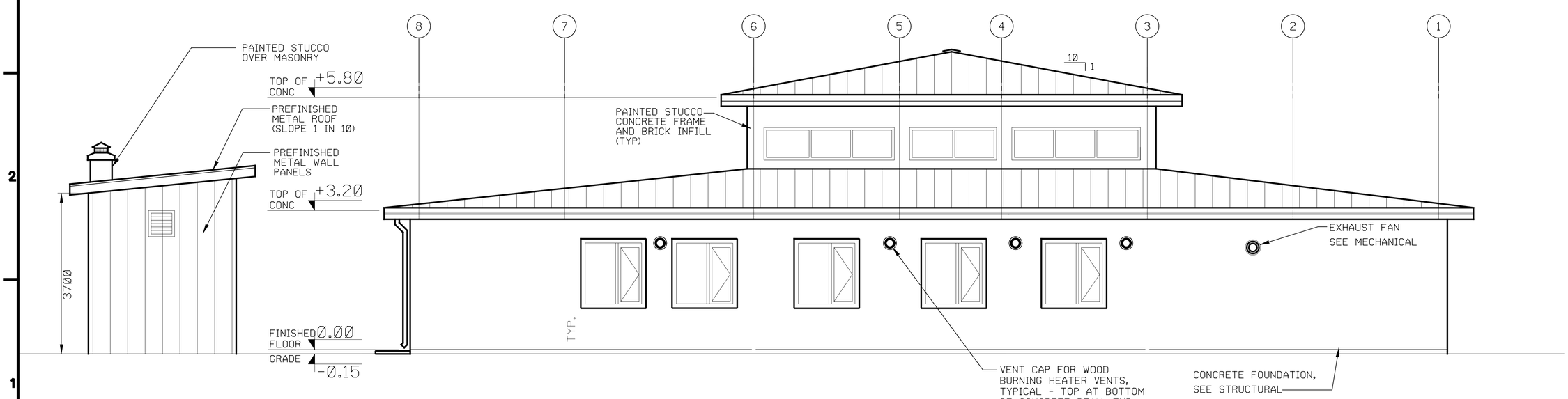


SOUTH ELEVATION
SCALE=1:50

NOTE: ~~SEE STANDARD DETAILS~~ FOR ADDITIONAL NOTES.
UNLESS OTHERWISE NOTED, LINEAR DIMENSIONS SHOWN ARE IN MILLIMETERS.

| SYMBOL | DESCRIPTION | DATE | APP |
|---|---|---|---|

DESIGNED BY: JLK
DWN BY: JLK
CHK BY: JLK
DATE: 4 February 2009
SUBMITTED BY:
FILE NO.: AF0807A-AR05EL.dwg

US Army Corps of Engineers
Afghanistan Engineer District

AFGHANISTAN NATIONAL POLICE (ANP) DISTRICT HEADQUARTERS COMPOUNDS – 1 STORY HQ
VARIOUS LOCATIONS, AFGHANISTAN
1 STORY BUILDING
BUILDING ELEVATIONS

SHEET REFERENCE NUMBER:
A
A–5

$DATE$
$FILE$

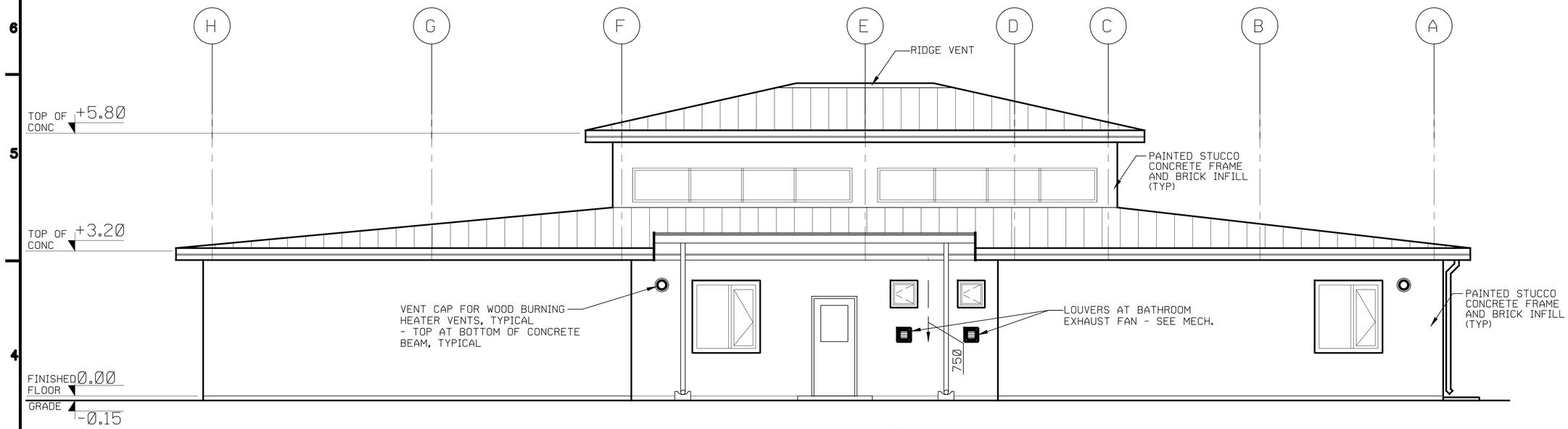


EAST ELEVATION
SCALE=1:50
C A-1 A-6

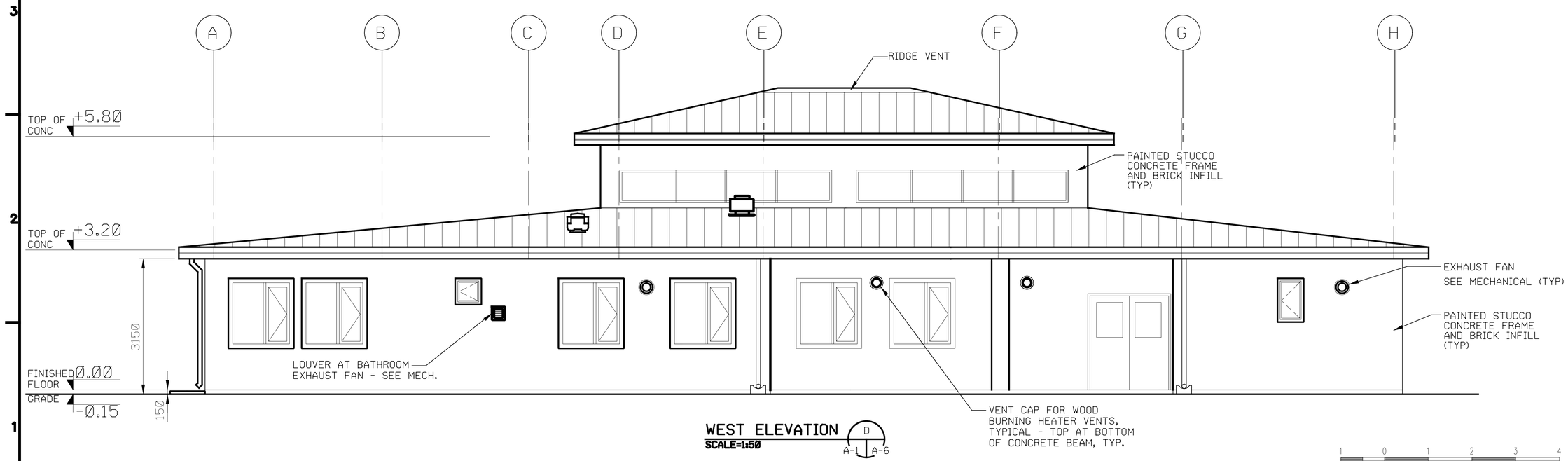


WEST ELEVATION
SCALE=1:50
D A-1 A-6

1 0 1 2 3 4
1:50

UNLESS OTHERWISE NOTED, LINEAR DIMENSIONS SHOWN ARE IN MILLIMETERS.

| SYMBOL | DESCRIPTION | DATE | APP |
|---|---|---|---|

DESIGNED BY: JLK
DWN BY: JLK
CHK BY: JLK
DATE: 4 February 2009
SUBMITTED BY:
FILE NO.: AF0807A-AR08EL.dwg

US Army Corps of Engineers
Afghanistan Engineer District

AFGHANISTAN NATIONAL POLICE (ANP) DISTRICT HEADQUARTERS COMPOUNDS – 1 STORY HQ
VARIOUS LOCATIONS, AFGHANISTAN
1 STORY BUILDING
BUILDING ELEVATIONS

SHEET REFERENCE NUMBER:
A
A–6

$DATE$
$FILE$

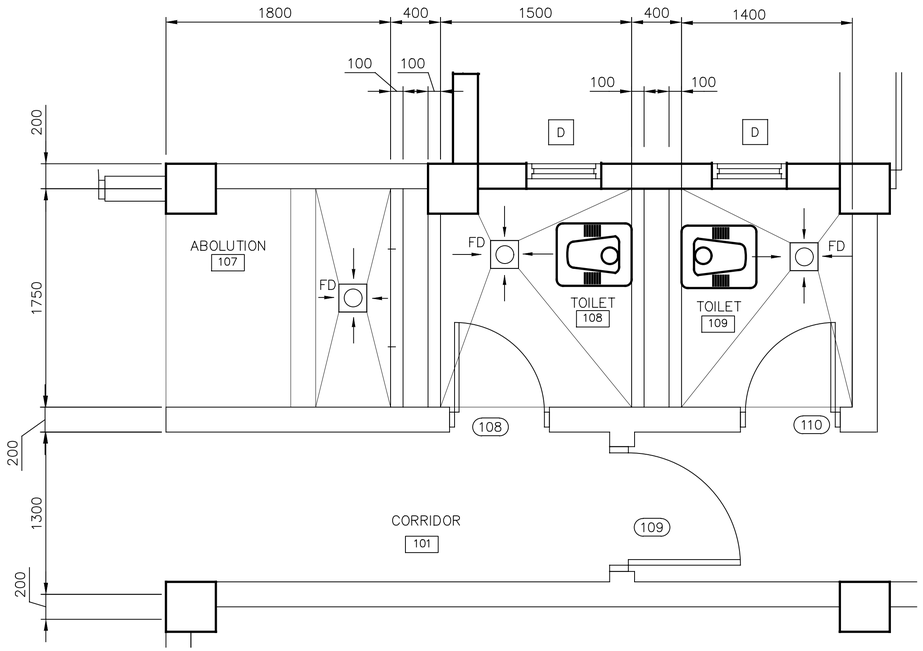


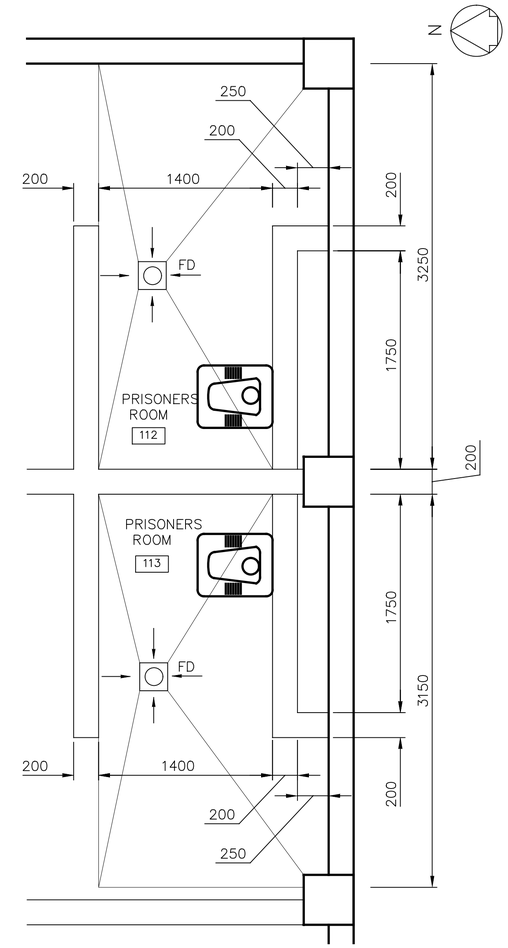


DETAIL 4
SCALE=1:25

DETAIL 1
SCALE=1:25

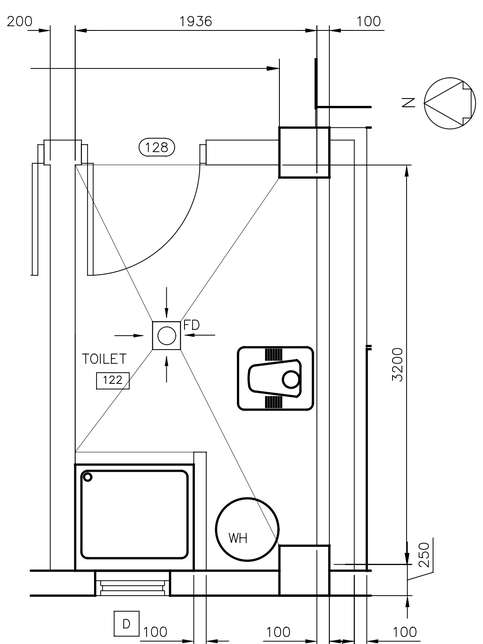


DETAIL 2
SCALE=1:25

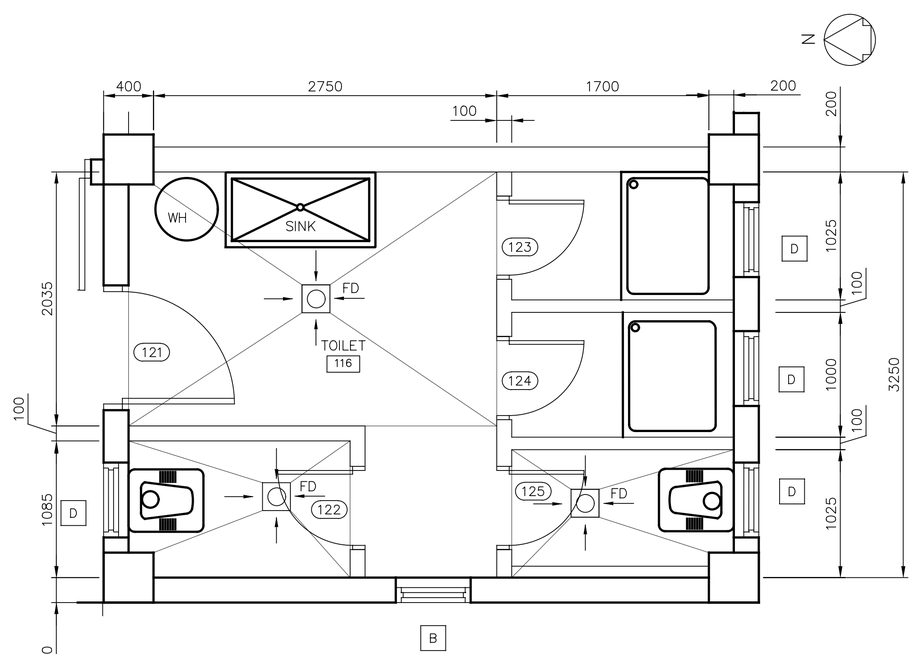


DETAIL 3
SCALE= 1:25

NOTE: PARTITION WALLS BETWEEN TOILET STALLS TO BE 2200mm HIGH.

NOTE:

1. ALL WATER CLOSETS SHALL FACE NORTH OR SOUTH DIRECTION.

1 .50 0 1 1.5
1:25

UNLESS OTHERWISE NOTED, LINEAR DIMENSIONS SHOWN ARE IN MILLIMETERS.

| SYMBOL | DESCRIPTION | DATE | APP |
|---|---|---|---|

DESIGNED BY: JJK
DWN BY: JJK
CHK BY: JJK
DATE: 4 February 2009
SUBMITTED BY:
FILE NO.: AF0807A-AR07LS

US Army Corps of Engineers
Afghanistan Engineer District

AFGHANISTAN NATIONAL POLICE (ANP) DISTRICT HEADQUARTERS COMPOUNDS – 1 STORY HQ
VARIOUS LOCATIONS, AFGHANISTAN
1 STORY BUILDING
ENLARGED TOILET PLANS

SHEET REFERENCE NUMBER:
A
A–7

$DATE$
$FILE$

# DOOR SCHEDULE

| DOOR | | | | | | | FRAME | HDW SET | REMARKS |
|---|---|---|---|---|---|---|---|---|---|
| NO. | LOCATION | TYPE | MAT'L | WIDTH | HEIGHT | THICK | MAT"L | | |
| 101 | LOBBY | G (PR) | WOOD | 1800 | 2100 | 45 | WOOD | 2 | 4, 7 20 MINUTE FIRE RATING |
| 102 | CORRIDOR | G (PR) | WOOD | 1800 | | | WOOD | 8 | 4, 7 20 MINUTE FIRE RATING |
| 103 | OFFICE | F | WOOD | 900 | | | WOOD | 4 | 20 MINUTE FIRE RATING |
| 104 | WEAPONS STORAGE | F | STEEL | 900 | | | STEEL | 11 | 5 45 MINUTE FIRE RATING |
| 105 | OFFICE | F | WOOD | 900 | | | WOOD | 4 | 20 MINUTE FIRE RATING |
| 106 | STORAGE | F | WOOD | 900 | | | WOOD | 6 | 45 MINUTE FIRE RATING |
| 107 | NOT USED | | | | | | | | |
| 108 | TOILET | L | WOOD | 700 | | | WOOD | 5 | 2 20 MINUTE FIRE RATING |
| 109 | CORRIDOR | N | WOOD | 900 | | | WOOD | 4 | 7 20 MINUTE FIRE RATING |
| 110 | TOILET | L | WOOD | 700 | | | WOOD | 5 | 2 20 MINUTE FIRE RATING |
| 111 | CORRIDOR | G | WOOD | 900 | | | WOOD | 1 | 7 20 MINUTE FIRE RATING |
| 112 | TO GUARD RM. | N | WOOD | 900 | | | WOOD | 4 | 7 20 MINUTE FIRE RATING |
| 113 | CORRIDOR | N | WOOD | 900 | | | WOOD | 4 | 7 20 MINUTE FIRE RATING |
| 114 | Prisoners Rm | C | STEEL | 900 | | | NOTE 1 | 11 | CELL DOOR |
| 115 | Prisoners Rm | C | STEEL | 900 | | | NOTE 1 | 11 | CELL DOOR |
| 116 | SOLDIERS BARRACKS | F | WOOD | 900 | | | WOOD | 7 | 6 45 MINUTE FIRE RATING |
| 117 | SOLDIERS BARRACKS | F | WOOD | 900 | | | WOOD | 7 | 6 45 MINUTE FIRE RATING |
| 118 | DINING ROOM | F | WOOD | 900 | | | WOOD | 7 | 4, 6 90 MINUTE FIRE RATING – PANIC |
| 119 | SOLDIERS BARRACKS | F | WOOD | 900 | | | WOOD | 7 | 6 45 MINUTE FIRE RATING |
| 120 | LOBBY | G (PR) | WOOD | 1800 | | | WOOD | 2 | 4, 7 45 MINUTE FIRE RATING |
| 121 | TOILET | L | WOOD | 900 | | | WOOD | 10 | 2 20 MINUTE FIRE RATING |
| 122 | TOILET STALL | L | WOOD | 600 | | | WOOD | 3 | 2 |
| 123 | TOILET STALL | L | WOOD | 600 | | | WOOD | 3 | 2 |
| 124 | TOILET STALL | L | WOOD | 600 | | | WOOD | 3 | 2 |
| 125 | TOILET STALL | L | WOOD | 600 | | | WOOD | 3 | 2 |
| 126 | KITCHEN | F | WOOD | 1200 | | | WOOD | 1 | 4 90 MINUTE FIRE RATING – PANIC |
| 127 | NOT USED | | | | | | | | |
| 128 | TOILET | L | WOOD | 900 | | | WOOD | 5 | 2 20 MINUTE FIRE RATING |
| 129 | POLICE CHIEF | F | WOOD | 900 | | | WOOD | 4 | 20 MINUTE FIRE RATING |
| 130 | DEPUTY POLICE CHIEF | F | WOOD | 900 | | | WOOD | 4 | 20 MINUTE FIRE RATING |
| 131 | NIGHT GUARD | F | WOOD | 900 | | | WOOD | 4 | 20 MINUTE FIRE RATING |
| 132 | KITCHEN | N | WOOD | 900 | | | WOOD | 9 | 7 90 MINUTE FIRE RATING – PANIC |
| 133 | DINING ROOM | G (PR) | WOOD | 1800 | | | WOOD | 2 | 4, 6 90 MINUTE FIRE RATING – PANIC |
| 134 | MECHANICAL ROOM | F | WOOD | 900 | | | WOOD | 6 | 45 MINUTE FIRE RATING |

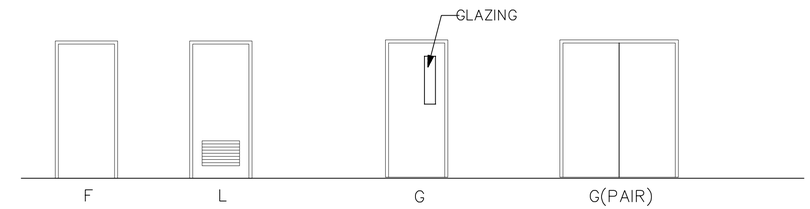


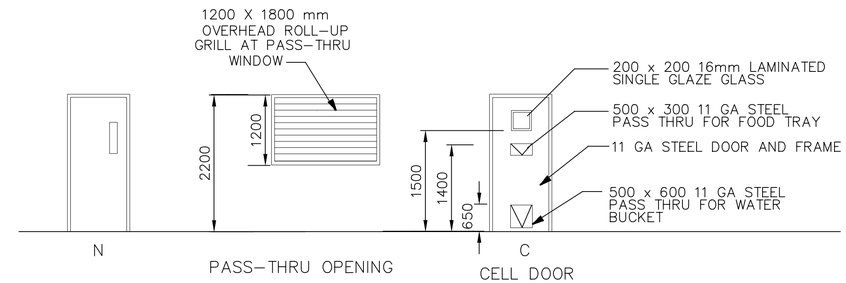


DOOR NOTES:

1. SEE DOOR SCHEDULE FOR DOOR AND FRAME SIZES.

TYPICAL DOOR TYPES

(NOT TO SCALE)

DOOR SCHEDULE NOTES:

1. CELL DOOR SHALL BE 11 GA STEEL DOOR WITH PASS-THRU WINDOWS. PROVIDE HINGED DOORS TO THESE PASS-THRU WINDOWS WITH PADLOCKS TO THE OUTSIDE.
2. PROVIDE 600 X 400 LOUVERS IN DOOR TYPE ( L )
3. UNDERCUT DOORS BY 12 mm REQUIRED, EXCEPT NO UNDERCUT AT DOOR TYPE C.
4. PROVIDE PANIC HARDWARE, FOR DINING ROOM EXIT DOORS.
5. PROVIDE 11 GA STEEL DOOR AND FRAME.
6. NO THRESHOLD OR DOOR SWEEP REQUIRED.
7. ALL DOOR GLAZING SHALL BE MIN. 8mm THICK PLEXIGLASS EXCEPT AT CELL DOORS WHERE GLAZING SHALL BE LAMINATED GLASS.
8. ALL DOOR GLAZING IS FIRE RATED

| SYMBOL | DESCRIPTION | DATE | APP |
|---|---|---|---|

DESIGNED BY: JJK
DATE: 4 February 2009
DWN BY: JJK
SUBMITTED BY:
CHK BY: JJK
FILE NO.: AF0807A-AR08SC

US Army Corps of Engineers
Afghanistan Engineer District

AFGHANISTAN NATIONAL POLICE (ANP) DISTRICT HEADQUARTERS COMPOUNDS – 1 STORY HQ
1 STORY BUILDING
VARIOUS LOCATIONS, AFGHANISTAN
DOOR SCHEDULE AND DOOR TYPES

SHEET REFERENCE NUMBER:
A
A-8

$DATE$
$FILE$

## ROOM FINISH SCHEDULE

| ROOM NO. | ROOM NAME | FLOOR FINISH | BASE FINISH | WALLS FINISH | CEILING FINISH | CEILING HEIGHT | REMARKS |
|---|---|---|---|---|---|---|---|
| 101 | CORRIDOR | F2 | B2 | W2 | C2 | 3.0 m | |
| 102 | LOBBY | F2 | B2 | W2 | C2 | | |
| 103 | OFFICE | F2 | B2 | W2 | C2 | | |
| 104 | WEAPONS STORAGE | F1 | B2 | W2 | C2 | | |
| 105 | OFFICE | F2 | B2 | W2 | C2 | | |
| 106 | STORAGE | F1 | B2 | W2 | C2 | | |
| 107 | ABOLUTION | F3 | B3 | W3 | C2 | | |
| 108 | TOILET | F3 | B3 | W3 | C2 | | |
| 109 | TOILET | F3 | B3 | W3 | C2 | | |
| 110 | GUARD ROOM | F2 | B2 | W2 | C2 | | |
| 111 | CORRIDOR | F2 | B2 | W2 | C2 | | |
| 112 | PRISONER'S ROOM | F2 | B2 | W2 | C2 | | |
| 113 | PRISONER'S ROOM | F2 | B2 | W2 | C2 | | |
| 114 | SOLDIER'S BARRACKS | F2 | B2 | W2 | C2 | | |
| 115 | SOLDIER'S BARRACKS | F2 | B2 | W2 | C2 | | |
| 116 | TOILET | F3 | B3 | W3 | C2 | | |
| 117 | LOBBY | F2 | B2 | W2 | C2 | | |
| 118 | COVERED LOADING | F1 | B5 | -- | -- | | |
| 119 | SOLDIER'S BARRACKS | F2 | B2 | W2 | C2 | | |
| 120 | DINING ROOM/SHURA | F2 | B2 | W2 | C2 | 5.6 m | |
| 121 | KITCHEN | F2 | B2 | W2 | C2 | 3.0 m | |
| 122 | TOILET | F3 | B3 | W3 | C2 | | |
| 123 | POLICE CHIEF | F2 | B2 | W2 | C2 | | |
| 124 | DEPUTY POLICE CHIEF | F2 | B2 | W2 | C2 | | |
| 125 | NIGHT GUARD | F2 | B2 | W2 | C2 | | |
| 126 | MECHANICAL ROOM | F2 | B2 | W2 | C2 | | |

## ROOM FINISH SCHEDULE LEGEND

FLOOR FINISH
- F1 SEALED CONCRETE
- F2 TERRAZZO TILE
- F3 CERAMIC TILE

BASE FINISH
- B2 TERRAZZO
- B3 CERAMIC TILE
- B5 NO BASE

WALL FINISH
- W2 PAINTED PLASTER
- W3 CERAMIC TILE

CEILING FINISH
- C2 PAINTED PLASTER

ROOM FINISH SCHEDULE NOTES:

1. ALL INTERIOR SURFACES NOT PROVIDED WITH A COLOR FACTORY FINISH SHALL RECEIVE A PAINT FINISH.
2. PAINTED PLASTER CEILING FINISH SHALL BE OFF-WHITE IN COLOR. ALL OTHER INTERIOR COLORS SHALL BE SELECTED FROM EARTH TONE COLORS; GRAYS, BEIGES, ETC. SUBMIT PAINT COLOR BOARD TO CONTRACTING OFFICER'S REPRESENTATIVE FOR APPROVAL PRIOR TO INSTALLATION.
3. ALL INTERIOR DOORS, WINDOWS, AND FRAMES SHALL HAVE A SEMI-GLOSS FINISH.
4. ALL WALL PENETRATIONS SHALL BE SEALED TO PROVIDE A NEAT APPEARANCE.
5. SEALANT COLORS SHALL MATCH COLOR OF ADJACENT FINISH.
6. PLASTER AND CERAMRIC TILE WALL FINISH, WHERE SCHEDULED, SHALL EXTEND TO UNDERSIDE OF CEILING.
7. PLASTER CEILINGS SHALL HAVE A FLAT PAINT FINISH EXCEPT AT TOILETS, ABOLUTION, AND KITCHEN WHERE PAINT FINISH SHALL BE SEMI-GLOSS.

EXTERIOR FINISH NOTES:

1. ALL EXTERIOR SURFACES NOT PROVIDED WITH A COLOR FACTORY FINISH SHALL RECEIVE A PAINT FINISH.
2. ALL EXTERIOR COLORS SHALL MATCH ADJACENT BUILDINGS TO THE GREATEST EXTENT POSSIBLE. SUBMIT PAINT COLOR BOARD TO CONTRACTING OFFICER'S REPRESENTATIVE FOR APPROVAL PRIOR TO INSTALLATION.
3. ALL EXTERIOR DOORS, WINDOWS, FRAMES, SOFFIT, FASCIA, AND TRIM SHALL HAVE A SEMI-GLOSS FINISH.
4. ALL WALL PENETRATIONS SHALL BE SEALED WATER-TIGHT AND SHALL HAVE A NEAT APPEARANCE.
5. SEALANT COLORS SHALL MATCH COLOR OF ADJACENT FINISH.

| SYMBOL | DESCRIPTION | DATE | ASB |
|---|---|---|---|

DESIGNED BY: JJK
DATE: 4 February 2009
DWN BY: JJK
SUBMITTED BY:
CHK BY: JJK
FILE NO.: AF0607A-AR09SC

US Army Corps of Engineers
Afghanistan Engineer District

AFGHANISTAN NATIONAL POLICE (ANP) DISTRICT HEADQUARTERS COMPOUNDS – 1 STORY HQ
VARIOUS LOCATIONS, AFGHANISTAN
1 STORY BUILDING
ROOM FINISH SCHEDULE

SHEET REFERENCE NUMBER:
A
A-9

$DATE$
$FILE$

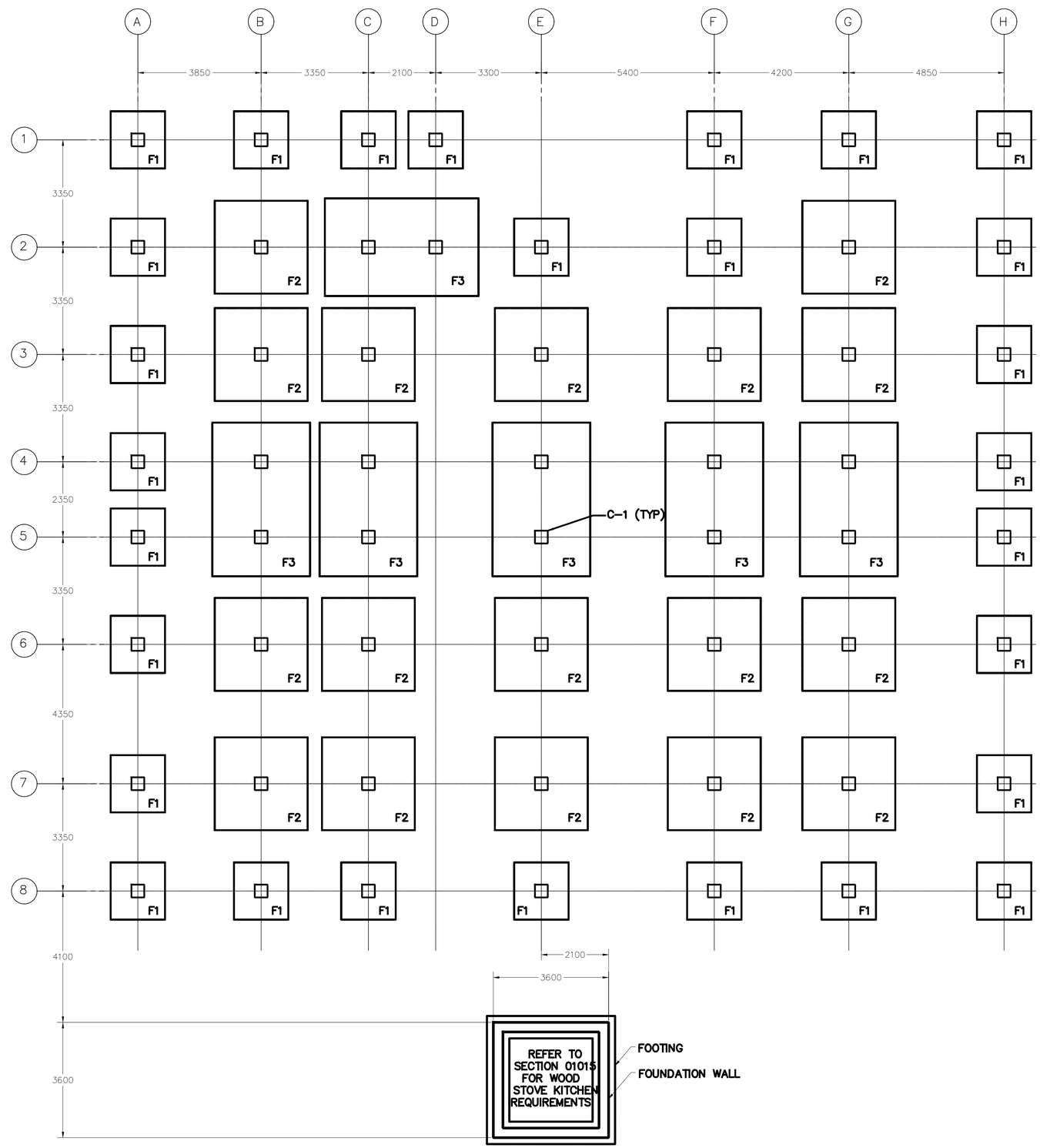


NOTES:

1.? GEOTECHNICAL INVESTIGATION SHALL CONFIRM BEARING CAPACITY TO BE NO LESS THAN 0.75 KG/SQ CM. IF GEOTECHNICAL INVESTIGATION SHOWS LESS THAN 0.75 KG/SQ CM, CONTRACTOR SHALL REDESIGN FOOTINGS BASED ON THE GEOTECHNICAL INVESTIGATION, SEE SPECIFICATION 01015 PARA 2.1, GEOTECHNICAL, FOUNDATION AND SURVEY.

2.? DEAD LOADS CONSIST OF THE WEIGHTS OF ALL MATERIAL OF CONSTRUCTION INCORPORATED IN THE BUILDING. LIVE LOADS USED FOR DESIGN SHALL BE IN ACCORDANCE WITH THE ASCE STANDARDS AND MINIMUM DESIGN LOADS FOR BUILDINGS AND OTHER STRUCTURES, ASCE 7–02.

3.? WIND LOADS SHALL BE CALCULATED IN ACCORDANCE WITH ASCE 7–02 USING A "3 SECOND GUST" WIND SPEED OF 125 KM/HR. ALL FACILITIES SHALL BE CLASSIFIED AS A MIINIMUM OF CATEGORY II IN ACCORDANCE WITH TABLE 1–1 IN ASCE 7–02.

4.? THE BUILDING AND ALL PARTS THEREOF SHALL BE DESIGNED FOR THE SEISMIC REQUIREMENTS AS DEFINED BY THE INTERNATIONAL BUILDING CODE 2000. SITE SPECIFIC DATA: SPECTRAL COORDINATES SS=1.65g AND S1=0.75g.

5.? REFER TO DWG S–6 FOR FOOTING SCHEDULE. TOP OF FOOTING SHALL BE LOCATED 800mm (MIN) BELOW FINISHED GRADE.

6.? ALL CONCRETE COLUMNS ARE TYPE C–1. REFER TO SECTION 10/S–6.

3 1.50 0 3 4.5
1:75

UNLESS OTHERWISE NOTED, LINEAR DIMENSIONS SHOWN ARE IN MILLIMETERS.

| SYMBOL | DESCRIPTION | DATE | APP |
|---|---|---|---|

DESIGNED BY: TCP
DATE: 4 February 2009
DWN BY: JJK
SUBMITTED BY:
CHK BY: JJK
FILE NO.: AF0607A–S801PN

US Army Corps of Engineers
Afghanistan Engineer District

AFGHANISTAN NATIONAL POLICE (ANP) DISTRICT HEADQUARTERS COMPOUNDS – 1 STORY HQ
VARIOUS LOCATIONS, AFGHANISTAN
1 STORY BUILDING
FOUNDATION PLAN

SHEET REFERENCE NUMBER:
A
S–1

$DATE$
$FILE$

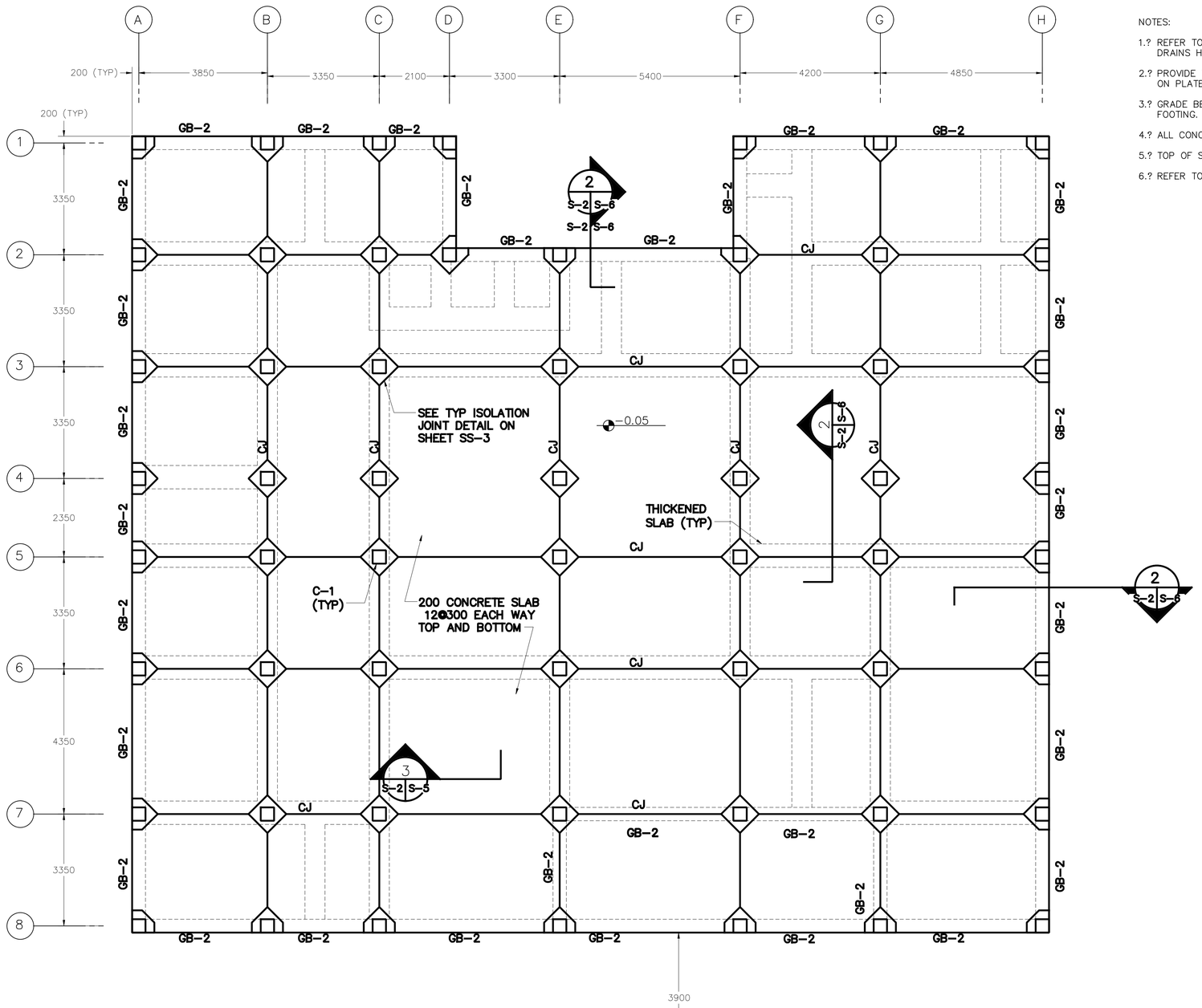


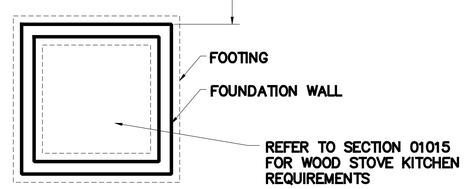


NOTES:

1.? REFER TO PLUMBING AND ARCHITECTURAL PLANS FOR FLOOR DRAIN LOCATIONS. NOT ALL DRAINS HAVE BEEN SHOWN. FLOOR SHALL BE SLOPED TO DRAIN.

2.? PROVIDE THICKENED SLAB UNDER ALL INTERIOR PARTITIONS. REFER TO SECTIONS 1 AND 2 ON PLATE S-5 FOR ADDITIONAL INFORMATION.

3.? GRADE BEAM SHALL EXTEND FROM COLUMN SPREAD FOOTING TO COLUMN SPREAD FOOTING. BOTTOM OF GRADE BEAM TO COINCIDE WITH TOP OF COLUMN FOOTING.

4.? ALL CONCRETE COLUMNS ARE TYPE C-1. REFER TO SECTION 10/S-5.

5.? TOP OF SLAB AND GRADE BEAM ELEVATIONS ARE AT 50mm BELOW FINISHED FLOOR.

6.? REFER TO SHEET SS-3 FOR TYPICAL CONTROL JOINT (CJ) DETAIL.

1:75

UNLESS OTHERWISE NOTED, LINEAR DIMENSIONS SHOWN ARE IN MILLIMETERS.

| SYMBOL | DESCRIPTION | DATE | APP |
|---|---|---|---|

DESIGNED BY: TCP
DATE: 4 February 2009
DWN BY: JLK
SUBMITTED BY:
CHK BY: JLK
FILE NO.: AF0807A-S802PN

US Army Corps of Engineers
Afghanistan Engineer District

AFGHANISTAN NATIONAL POLICE (ANP) DISTRICT HEADQUARTERS COMPOUNDS – 1 STORY HQ
VARIOUS LOCATIONS, AFGHANISTAN
1 STORY BUILDING
GRADE BEAM PLAN

SHEET REFERENCE NUMBER:
A
S-2

$DATE$
$FILE$

NOTES:

1.? TOP OF LOW ROOF SLAB AND LOW ROOF BEAMS IS AT 3200 A.F.F.

2.? COORDINATE ROOF OPENING REQUIREMENTS WITH OTHER DISCIPLINES. PROVIDE ADDITIONAL REINFORCEMENT AROUND OPENINGS PER TYPICAL DETAIL ON DWG SS-2.

3.? REFER TO SHEET S-7 FOR STANDARD BEAM AND COLUMN CONSTRUCTION DETAILS.

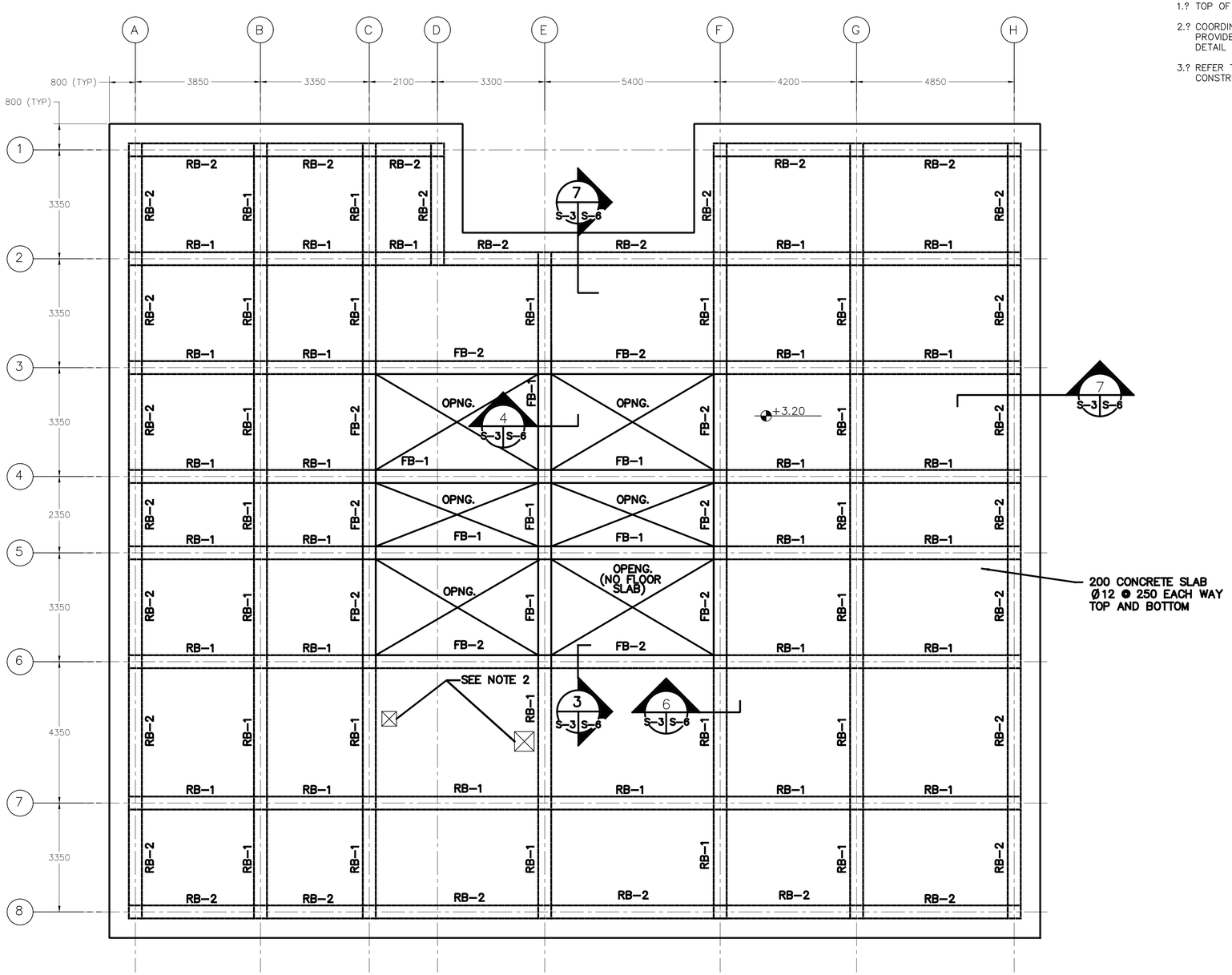


N

3 1.50 0 3 4.5
1:75

UNLESS OTHERWISE NOTED, LINEAR DIMENSIONS SHOWN ARE IN MILLIMETERS.

| SYMBOL | DESCRIPTION | DATE | APP |
|---|---|---|---|

DESIGNED BY: TCP
DATE: 4 February 2009
DWN BY: TCP
SUBMITTED BY:
CHK BY: KGO
FILE NO.: AF0807A-S803PN

US Army Corps of Engineers
Afghanistan Engineer District

AFGHANISTAN NATIONAL POLICE (ANP) DISTRICT HEADQUARTERS COMPOUNDS – 1 STORY HQ
VARIOUS LOCATIONS, AFGHANISTAN
1 STORY BUILDING
LOWER ROOF BEAM PLAN

SHEET REFERENCE NUMBER:
A
S-3

$DATE$
$FILE$

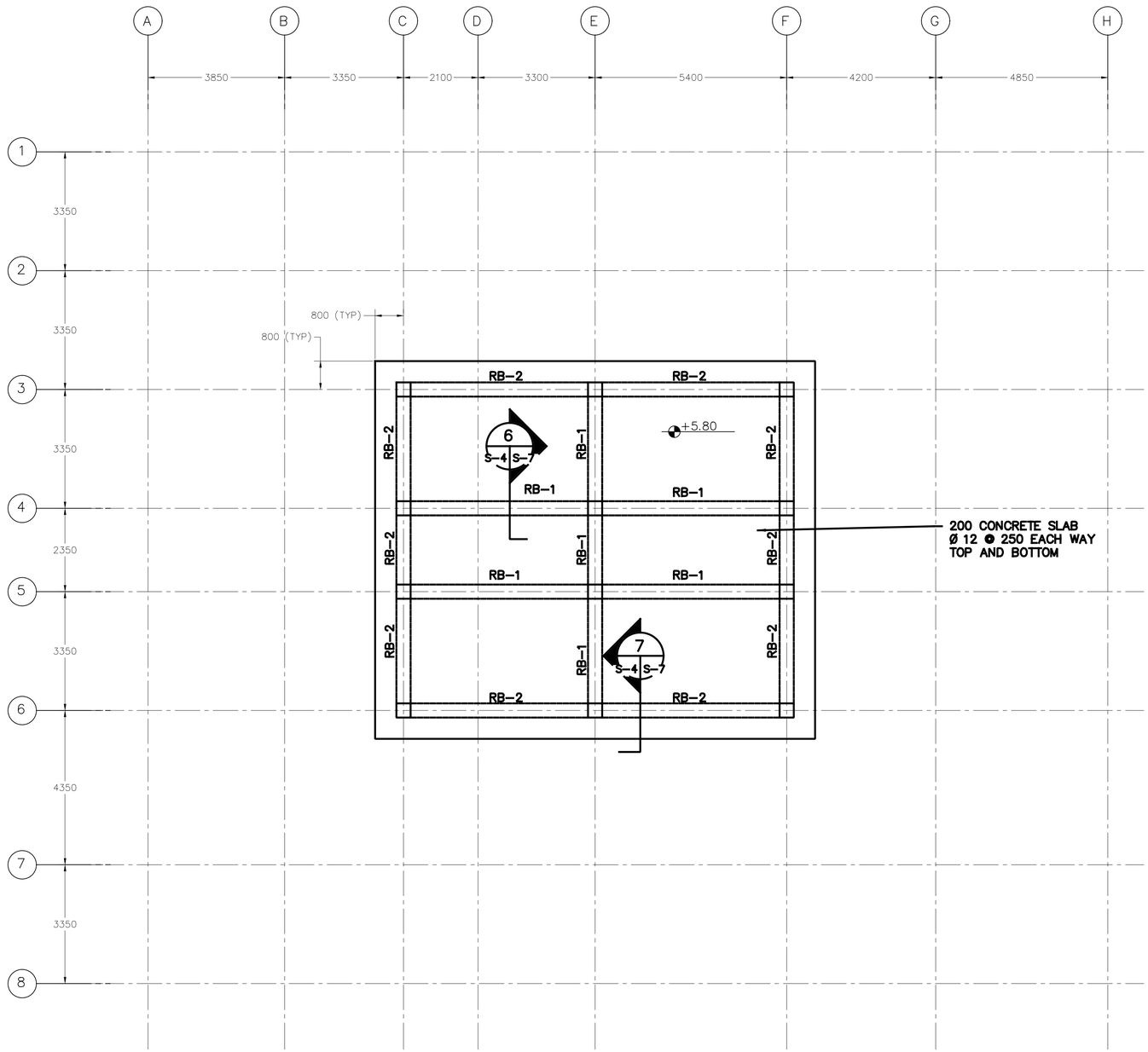


NOTES:

1. TOP OF HIGH ROOF SLAB AND HIGH ROOF BEAMS IS AT 5800 A.F.F.
2. COORDINATE ROOF OPENING REQUIREMENTS WITH OTHER DISCIPLINES. PROVIDE ADDITIONAL REINFORCEMENT AROUND OPENINGS PER TYPICAL DETAIL ON DWG SS-2.
3. REFER TO SHEET S-8 FOR STANDARD BEAM AND COLUMN CONSTRUCTION DETAILS.

3 1.50 0 3 4.5
1:75

UNLESS OTHERWISE NOTED, LINEAR DIMENSIONS SHOWN ARE IN MILLIMETERS.

| SYMBOL | DESCRIPTION | DATE | APP |
|---|---|---|---|

DESIGNED BY: TCP
DATE: 4 February 2009
DWN BY: TCP
SUBMITTED BY:
CHK BY: KGO
FILE NO.:

US Army Corps of Engineers
Afghanistan Engineer District

AFGHANISTAN NATIONAL POLICE (ANP) DISTRICT HEADQUARTERS COMPOUNDS – 1 STORY HQ
VARIOUS LOCATIONS, AFGHANISTAN

HIGH ROOF BEAM PLAN

SHEET REFERENCE NUMBER:
S-4

$DATE$
$FILE$

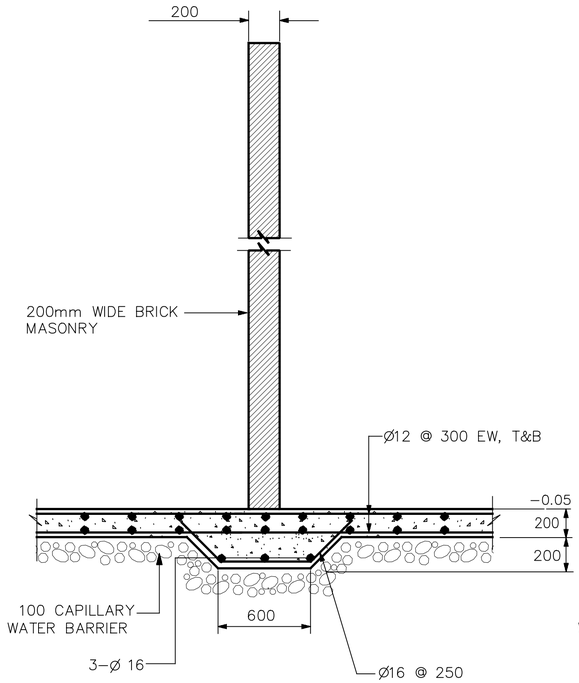


NOTE:
1. TYPICAL AT ALL INTERIOR PARTITIONS EXCEPT WHERE CONCRETE PARTITIONS ARE INDICATED IN ARCHITECTURAL FLOOR PLANS.

TYPICAL PARTITION DETAIL 2 / S-2 S-5
NOT TO SCALE

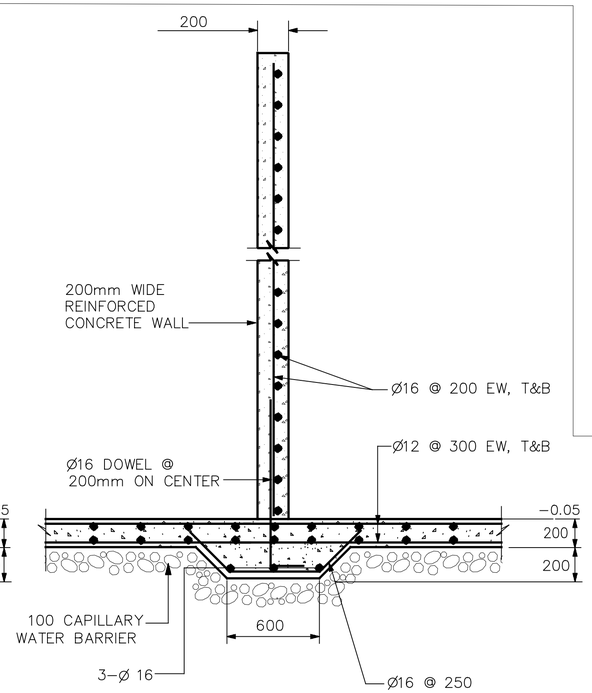


NOTES:
1. SEE ARCHITECTURAL FLOOR PLANS FOR LOCATION OF CONCRETE PARTITIONS.
2. SIMILAR CONDITION AT EXTERIOR CONCRETE WALLS IDENTIFIED IN ARCHITECTURAL FLOOR PLANS – PROVIDE VERTICAL AND HORIZONTAL REINFORCEMENT INDICATED.

REINF. CONCRETE PARTITION DETAIL 1 / S-2 S-5
NOT TO SCALE

## FOOTING SCHEDULE

| FTG TYPE | SIZE (L X W) | DEPTH (D)* | REINFORCING | |
|---|---|---|---|---|
| | | | TOP EW | BOTT EW |
| F1 | 1700 X 1700 | 250 | Ø25 @ 300 | Ø 25 @ 300 |
| F2 | 2700 X 2700 | 425 | Ø25 @ 350 | Ø 25 @ 350 |
| F3 | 4800 X 3050 | 425 | Ø25 @ 350 | Ø 25 @ 350 |

*TOP FOOTING ELEVATION SHALL BE THE SAME FOR ALL FOOTINGS.
*FOR THE COMBINED FOOTINGS, CENTER ON THE CENTROID FOR THE TWO COLUMNS.
*REFER TO FOUNDATION PLAN FOR ORIENTATION.

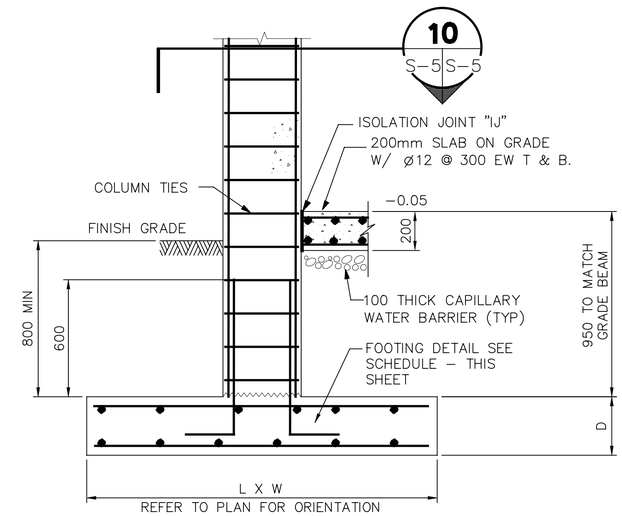


TYPICAL COLUMN AND FOOTING
NOT TO SCALE

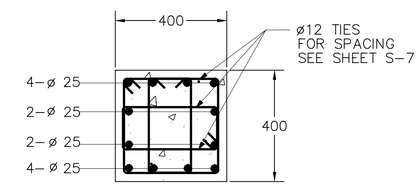


C-1

SECTION 10 / S-5 S-5
SCALE=1:10

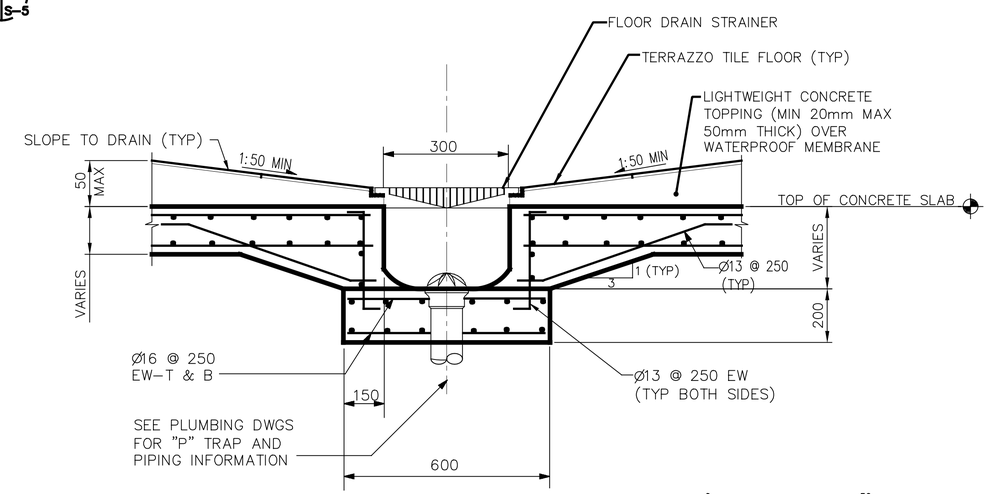


SECTION 3 / S-2 S-5
NOT TO SCALE

0 .50 1.00
1:10

UNLESS OTHERWISE NOTED, SHOWN ARE IN MILLIMETERS.

| MARK | DESCRIPTION | DATE | APP |
|---|---|---|---|

DESIGNED BY: TCP
DATE: 4 February 2009
DWN BY: JJK
SUBMITTED BY:
CHK BY: JJK
FILE NO.: AF06074-S8050T

US Army Corps of Engineers
Afghanistan Engineer District

AFGHANISTAN NATIONAL POLICE (ANP) DISTRICT HEADQUARTERS COMPOUNDS – 1 STORY HQ
VARIOUS LOCATIONS, AFGHANISTAN
1 STORY BUILDING
FOOTING AND COLUMN DETAILS

SHEET REFERENCE NUMBER:
A
S-5

$DATE$
$FILE$

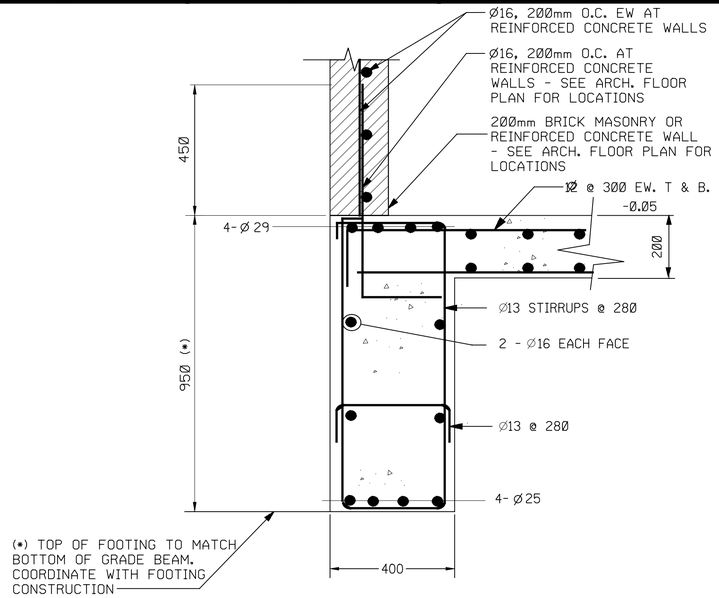


**GB—2**

**SECTION** 2 S-2 S-6
SCALE 1:10

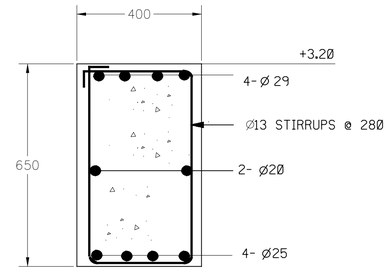


**FB—1**

**SECTION** 4 S-3 S-6
SCALE 1:10

NOTE:

1. GRADE BEAM REINFORCING IS CONTINUOUS THROUGH THE COLUMN.

2. COORDINATE REBAR PLACEMENT BETWEEN BEAMS SO THAT A MAXIMUM NUMBER OF REBAR ARE CONTINUOUS. BEND BARS AS REQUIRED.

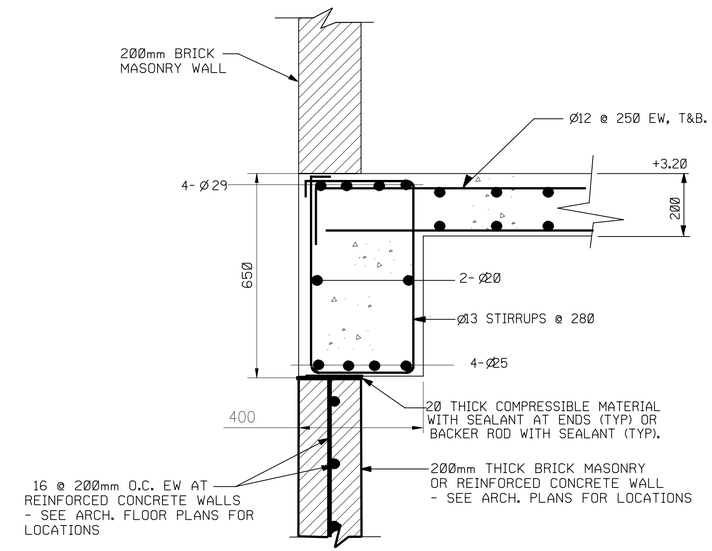


**FB—2**

**SECTION** 3 S-3 S-6
SCALE 1:10

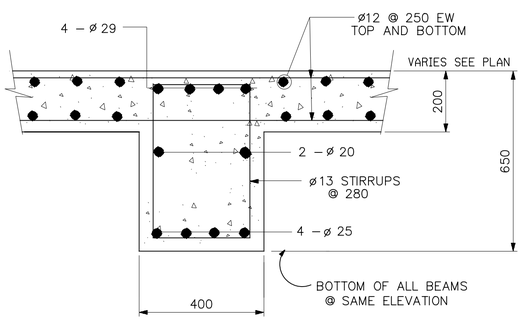


**RB—1**

**SECTION** 6 S-3,S-4 S-6
SCALE= NONE

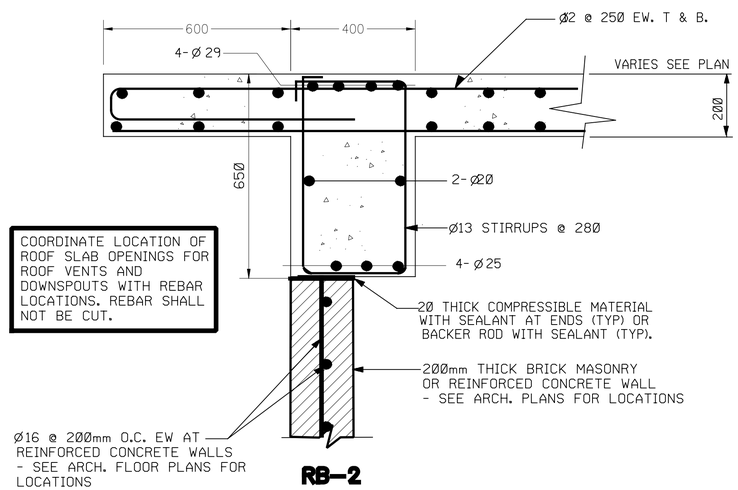


COORDINATE LOCATION OF ROOF SLAB OPENINGS FOR ROOF VENTS AND DOWNSPOUTS WITH REBAR LOCATIONS. REBAR SHALL NOT BE CUT.

**RB—2**

**SECTION** 7 S-3,S-4 S-6
SCALE 1:10

0 .50 1.00
1:10

UNLESS OTHERWISE NOTED, LINEAR DIMENSIONS SHOWN ARE IN MILLIMETERS.

| SYMBOL | DESCRIPTION | DATE | APP |
|---|---|---|---|

DESIGNED BY: TCP
DATE: 4 February 2009
DWN BY: JJK
SUBMITTED BY:
CHK BY: JJK
FILE NO.: AF0607A-S806DT

US Army Corps of Engineers
Afghanistan Engineer District

AFGHANISTAN NATIONAL POLICE (ANP) DISTRICT HEADQUARTERS COMPOUNDS – 1 STORY HQ
VARIOUS LOCATIONS, AFGHANISTAN

1 STORY BUILDING
BEAM DETAILS

SHEET REFERENCE NUMBER:
A
S–6

$DATE$
$FILE$

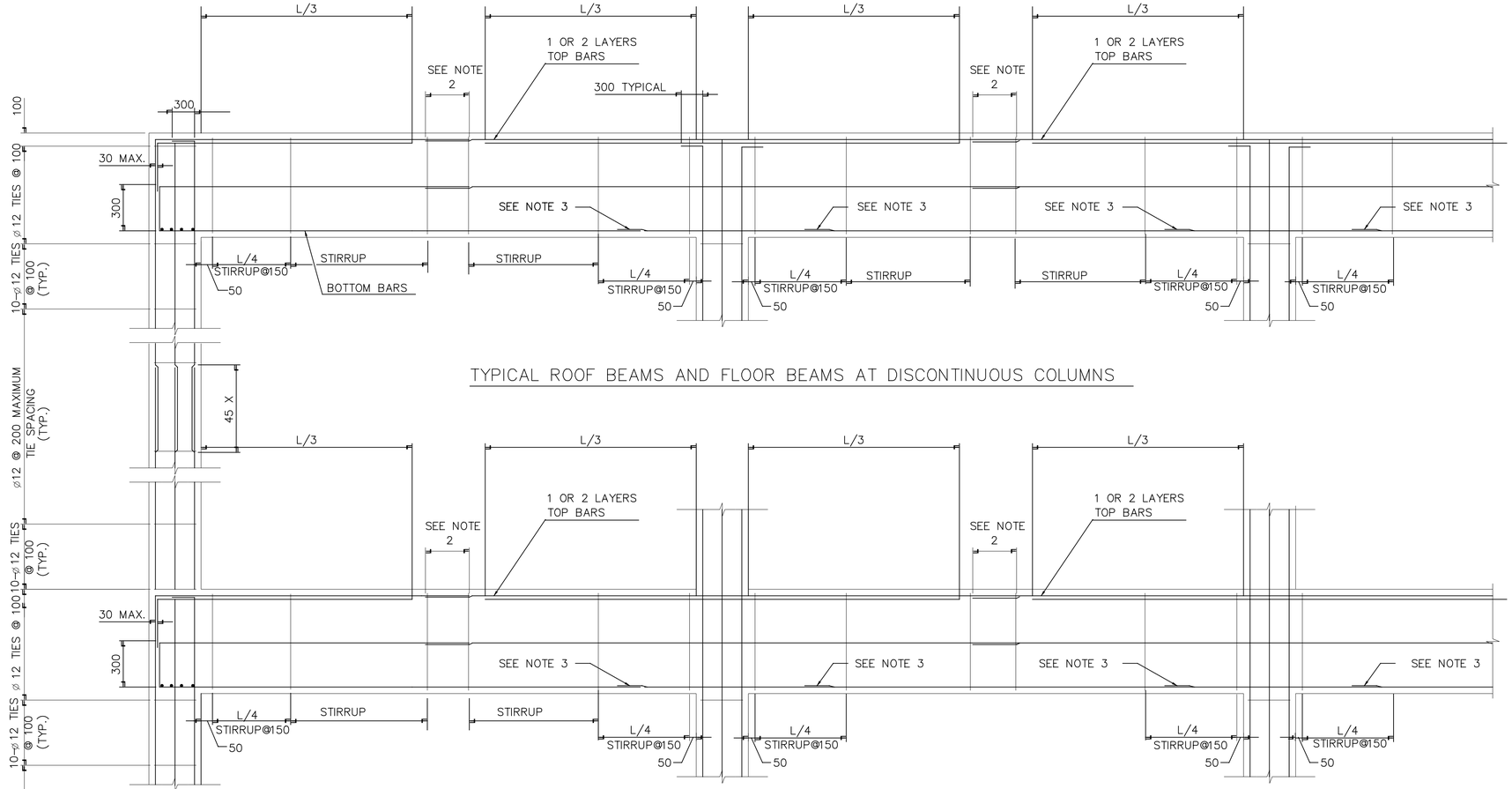


TYPICAL ROOF BEAMS AND FLOOR BEAMS AT DISCONTINUOUS COLUMNS




TYPICAL FLOOR BEAMS

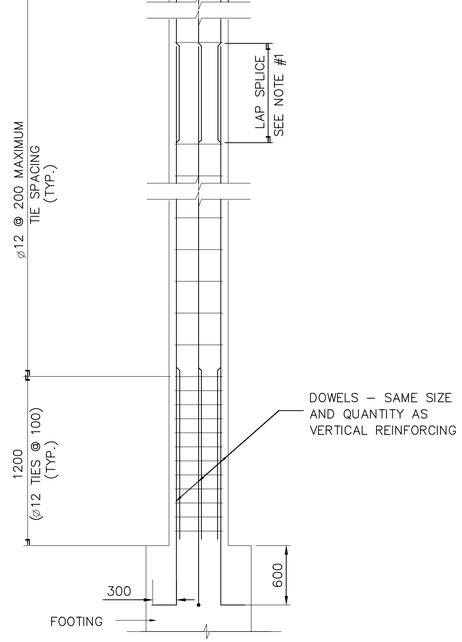


ALL COLUMN TIES ARE Ø12

NOTES:

1. ALL LAP SPLICES IN BEAMS AND COLUMNS SHALL BE CLASS B SPLICES

2. PROVIDE A 150mm MAXIMUM OF STIRRUP SPACING AT LAP SPLICES, AS SHOWN ON DRAWING. ALL SPLICES NOTED SHALL OCCUR AT MIDSPAN. REFER INDIVIDUAL BEAM DETAILS FOR STIRRUP SPACING.

3. THE LAP SPLICES SHOWN SHALL BE PERMITTED IN SPANS MEASURING 6 METERS OR MORE FROM CENTERLINES OF SUPPORTS (COLUMNS OR WALLS) ONLY. SPLICES INDICATED SHALL BE LOCATED ONE METER FROM THE FACE OF THE COLUMN, AS SHOWN.

4. BEAM STEEL NOT SHOWN FOR CLARITY.

# STANDARD BEAM AND COLUMN DETAIL

1 .50 0 1
1:20

UNLESS OTHERWISE NOTED, LINEAR DIMENSIONS SHOWN ARE IN MILLIMETERS.

| SYMBOL | DESCRIPTION | DATE | APP |
|---|---|---|---|

DESIGNED BY: TCP
DATE: 4 February 2009
DWN BY: TCP
SUBMITTED BY:
CHK BY: KGO
FILE NO.: AF0807A-S8070T

US Army Corps of Engineers
Afghanistan Engineer District

AFGHANISTAN NATIONAL POLICE (ANP) DISTRICT HEADQUARTERS COMPOUNDS – 1 STORY HQ
VARIOUS LOCATIONS, AFGHANISTAN
1 STORY BUILDING
STANDARD BEAM AND COLUMN DETAIL

SHEET REFERENCE NUMBER:
A
S-7

$DATE$
$FILE$

NOTES:
1. FOR LEGENDS, ABBREVIATIONS AND STANDARD MECHANICAL DETAILS SEE SHEETS SM-1 AND SM-3.
2. FOR EQUIPMENT SCHEDULES AND CONTROL DIAGRAMS SEE SHEET SM-2.
3. ALL DIMENSIONS ARE IN MM UNLESS NOTED OTHERWISE.
4. PROVIDE EACH EXHAUST FAN WITH MANUFACTURER'S STANDARD EXHAUST GRILL AND GRAVITY BACKDRAFT DAMPER.
5. PROVIDE 200 x 100 ALL-WEATHER LOUVER WITH BIRDSCREEN.
6. KITCHEN EXHAUST HOOD WITH ALUMINUM FILTERS AND SEALED DUCT CONNECTION TO EXHAUST FAN. SIZE OF HOOD TO MATCH COOKING EQUIPMENT PROVIDED.
7. EXHAUST FAN EF-A-5 CAPACITY INDICATED HERE IS MINIMUM BASED ON 1200W X 3000L HOOD: ITS CAPACITY SHALL BE REVISED UPWARD TO MATCH AIRFLOW PERFORMANCE REQUIRED BY THE KITCHEN HOOD EQUIPMENT MANUFACTURER. PROPANE STOVE FLUE DUCT SHALL CONNECT TO KITCHEN EXHAUST HOOD.

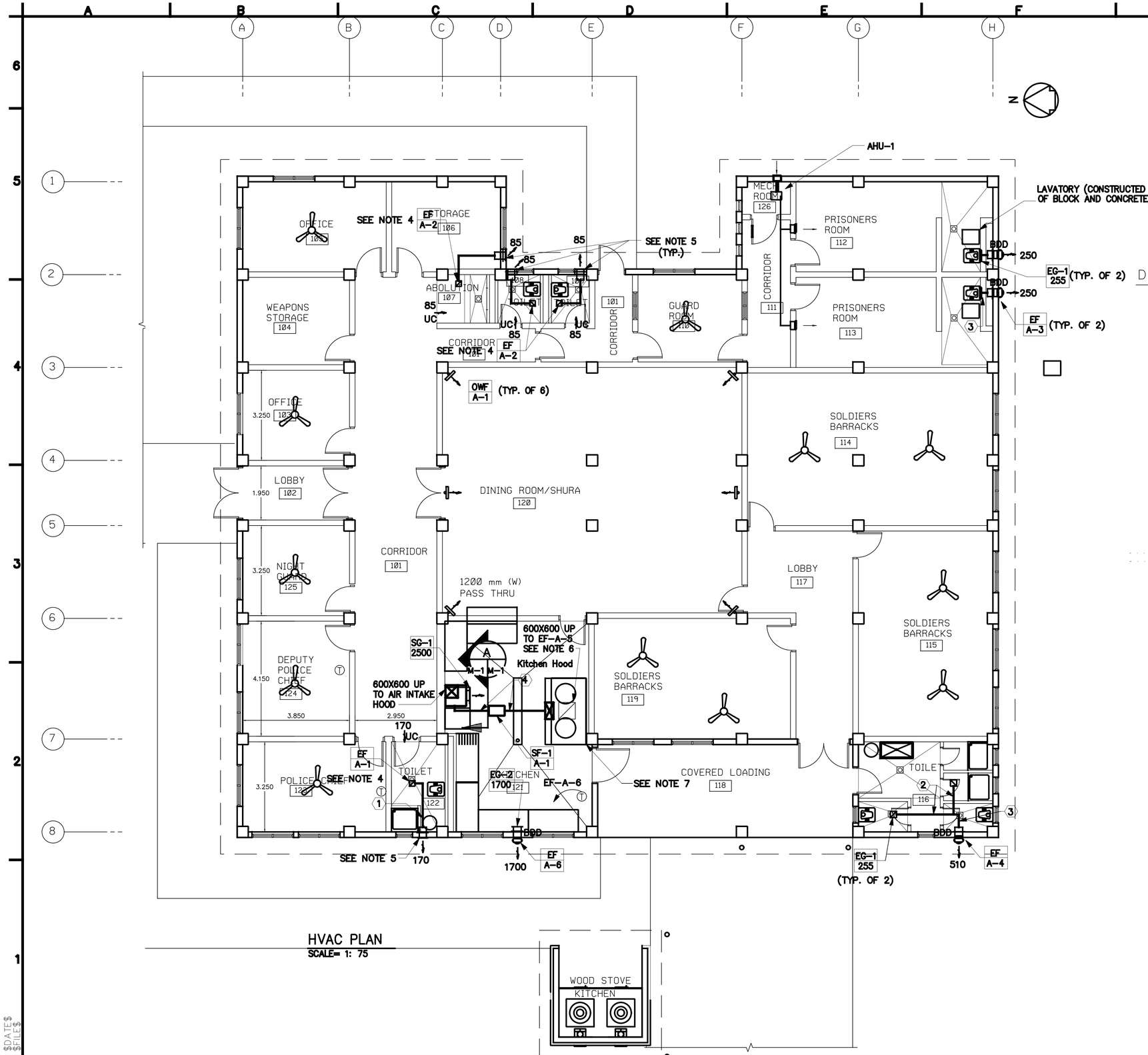


HVAC PLAN
SCALE= 1: 75

DUCT SIZING LEGEND

| | |
|---|---|
| 1 | 200 X 100 |
| 2 | 200 X 150 |
| 3 | 200 X 200 |
| 4 | 600 X 300 |

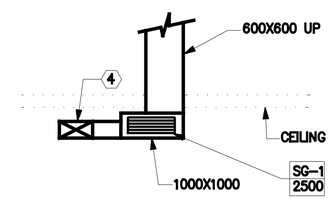


DETAIL A M-1
SCALE 1: 50

1:50
1:75
UNLESS OTHERWISE NOTED, LINEAR DIMENSIONS SHOWN ARE IN MILLIMETERS.

| SYMBOL | DESCRIPTION | DATE | APP |
|---|---|---|---|

DESIGNED BY: RMS
DATE: 4 February 2009
DWN BY: JRP
SUBMITTED BY:
CHK BY: JLK
FILE NO.: AF0607A-MH01PN

US Army Corps of Engineers
Afghanistan Engineer District

AFGHANISTAN NATIONAL POLICE (ANP) DISTRICT HEADQUARTERS COMPOUNDS – 1 STORY HQ
VARIOUS LOCATIONS, AFGHANISTAN
1 STORY BUILDING
HVAC PLAN

SHEET REFERENCE NUMBER:
A
M-1

$DATE$
$FILE$

NOTES:
1. PROVIDE DOUBLE WALL TYPE METAL VENT THROUGH EXTERIOR WALL FOR VENTING OF WOOD STOVES, TOP AT BOTTOM OF CONCRETE BEAM. WOOD STOVES TO BE PROVIDED BY OCCUPANTS. COORDINATE SIZE OF VENT THROUGH WALL WITH WOOD STOVE MANUFACTURER'S RECOMMENDATIONS.
2. PROVIDE 25MM GAS SUPPLY LINE WITH A SERVICE SHUT-OFF VALVE DOWN TO THE COOKING STOVES. GAS PIPING AND CONNECTION TO INDIVIDUAL STOVES SHALL BE IN CONFORMANCE WITH STOVE MANUFACTURER RECOMMENDATIONS.

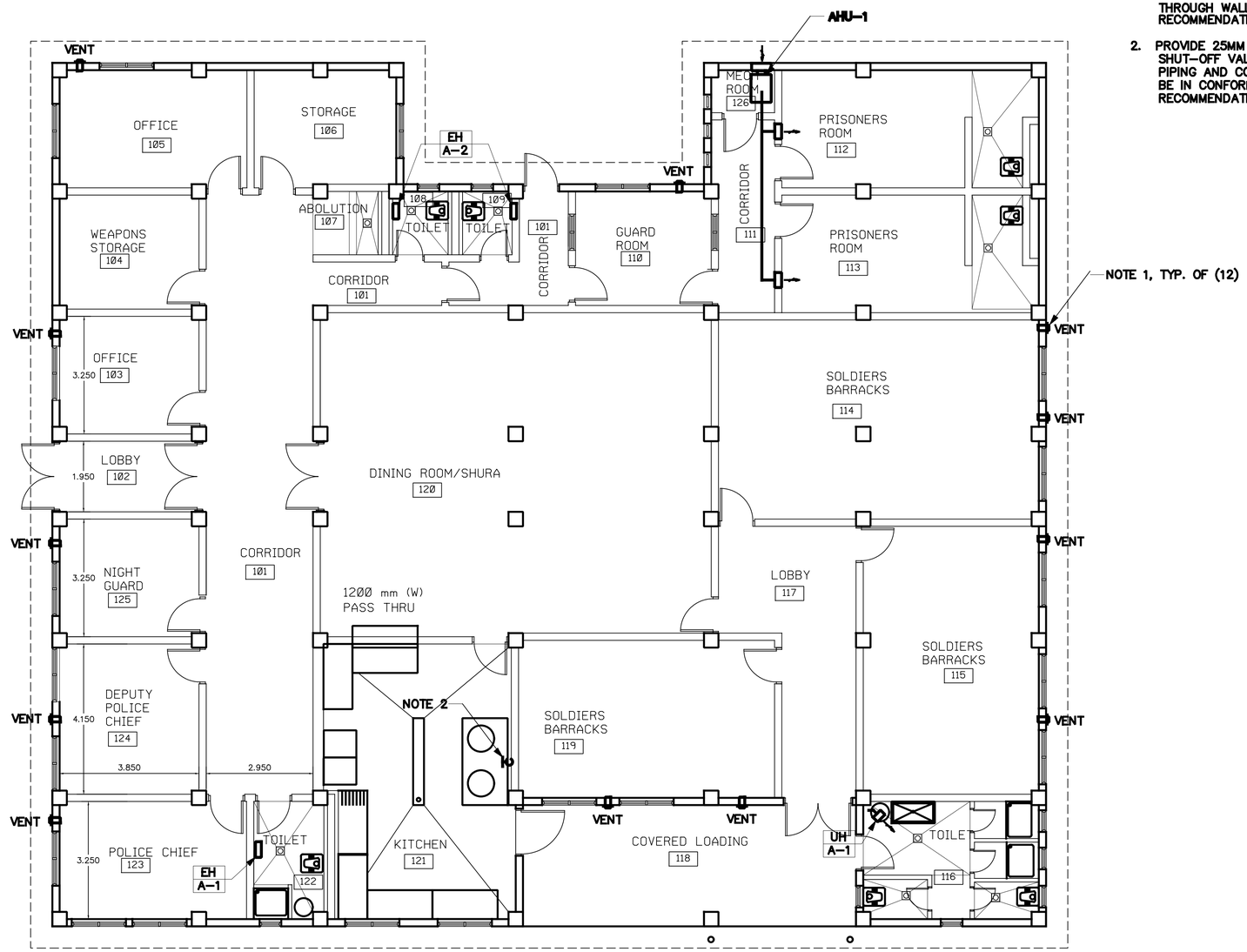


HEATING PLAN
SCALE= 1: 75

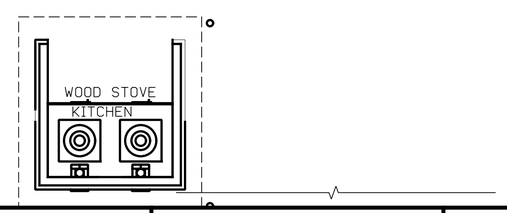


3 1.50 0 3 4.5
1:75
UNLESS OTHERWISE NOTED, LINEAR DIMENSIONS SHOWN ARE IN MILLIMETERS.

| SYMBOL | DESCRIPTION | DATE | APP |
|---|---|---|---|

DESIGNED BY: RMS
DATE: 4 February 2009
DWN BY: JRP
SUBMITTED BY:
CHK BY: JJK
FILE NO.: AF0607A-MH02PN

US Army Corps of Engineers
Afghanistan Engineer District

AFGHANISTAN NATIONAL POLICE (ANP) DISTRICT HEADQUARTERS COMPOUNDS – 1 STORY HQ
VARIOUS LOCATIONS, AFGHANISTAN
1 STORY BUILDING
HEATING PLAN

SHEET REFERENCE NUMBER:
A
M-2

$DATE$
$FILE$

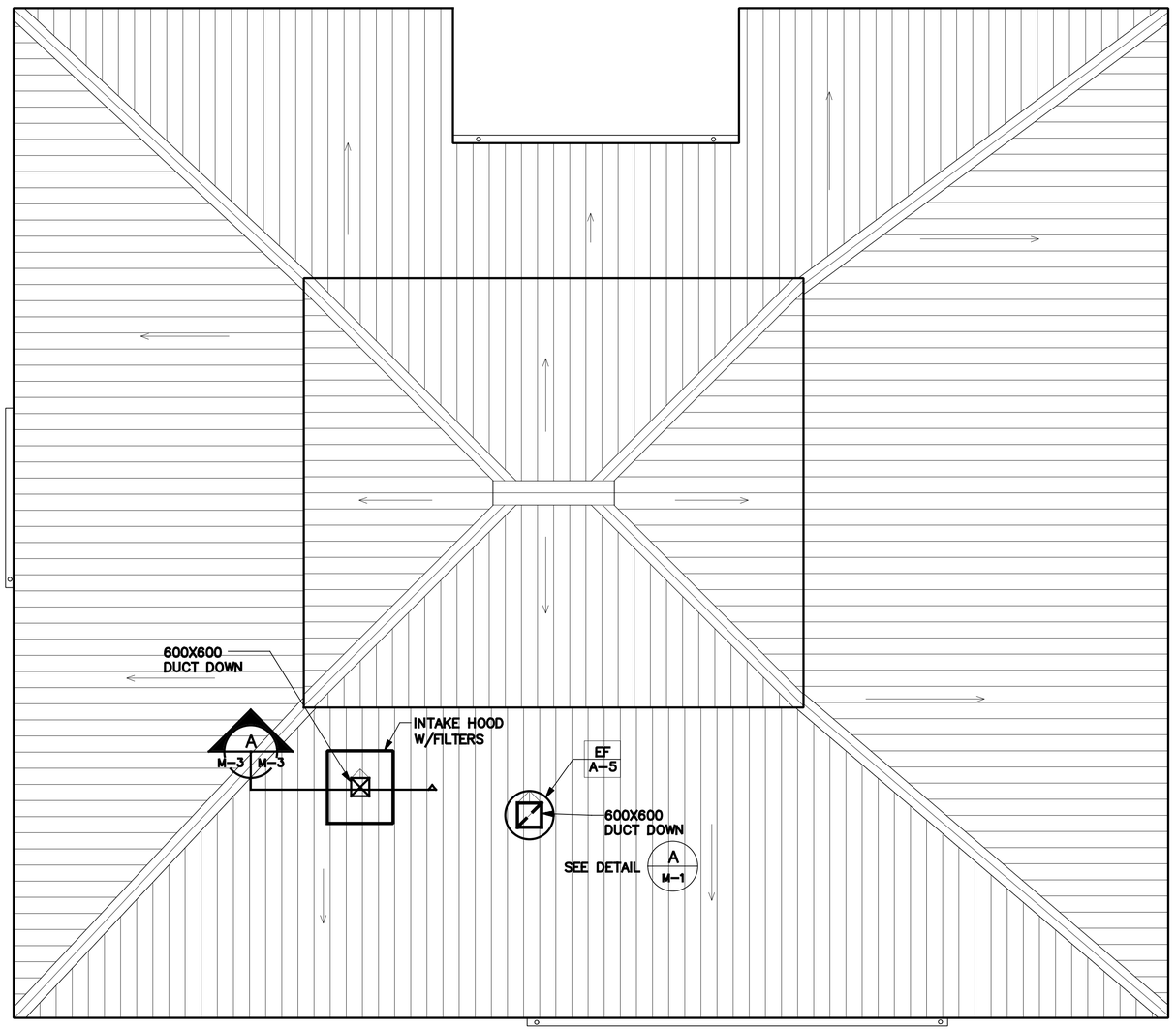


ROOF PLAN
SCALE= 1: 75

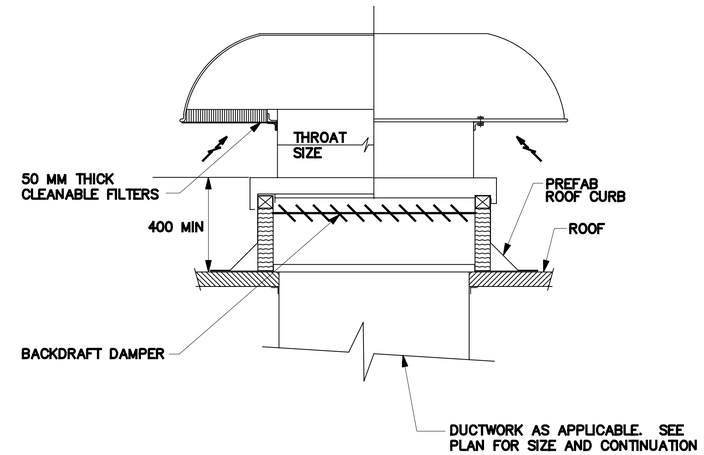


NOTE:
1. FILTER AREA SELECTION AT MAXIMUM FACE VELOCITY OF 300 FPM OR 1.52 MPS.

AIR INTAKE HOOD (A / M-3)
NOT TO SCALE

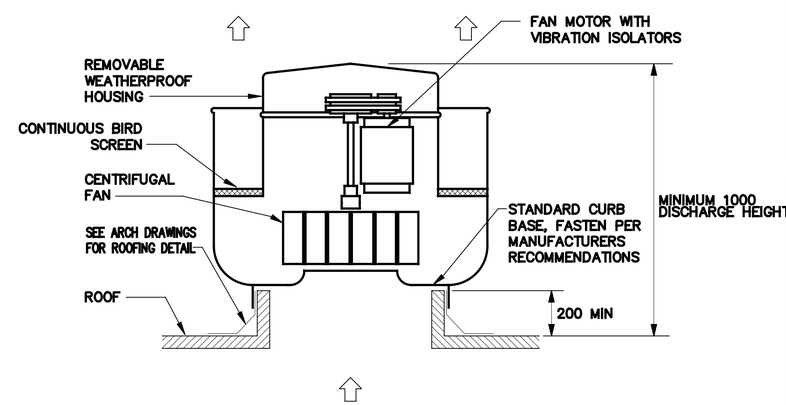


UPBLAST POWER ROOF VENTILATOR (B / M-3)
NOT TO SCALE

3 1.50 0 3 4.5
1:75
UNLESS OTHERWISE NOTED, LINEAR DIMENSIONS SHOWN ARE IN MILLIMETERS.

| SYMBOL | DESCRIPTION | DATE | APP |
|---|---|---|---|

DESIGNED BY: RMS
DWN BY: JLK
CHK BY: JLK
DATE: 4 February 2009
SUBMITTED BY:
FILE NO.: AF0607A-MH03PN

US Army Corps of Engineers
Afghanistan Engineer District

AFGHANISTAN NATIONAL POLICE (ANP) DISTRICT HEADQUARTERS COMPOUNDS – 1 STORY HQ
VARIOUS LOCATIONS, AFGHANISTAN
1 STORY BUILDING
ROOF PLAN

SHEET REFERENCE NUMBER:
A
M-3

$DATE$
$FILE$

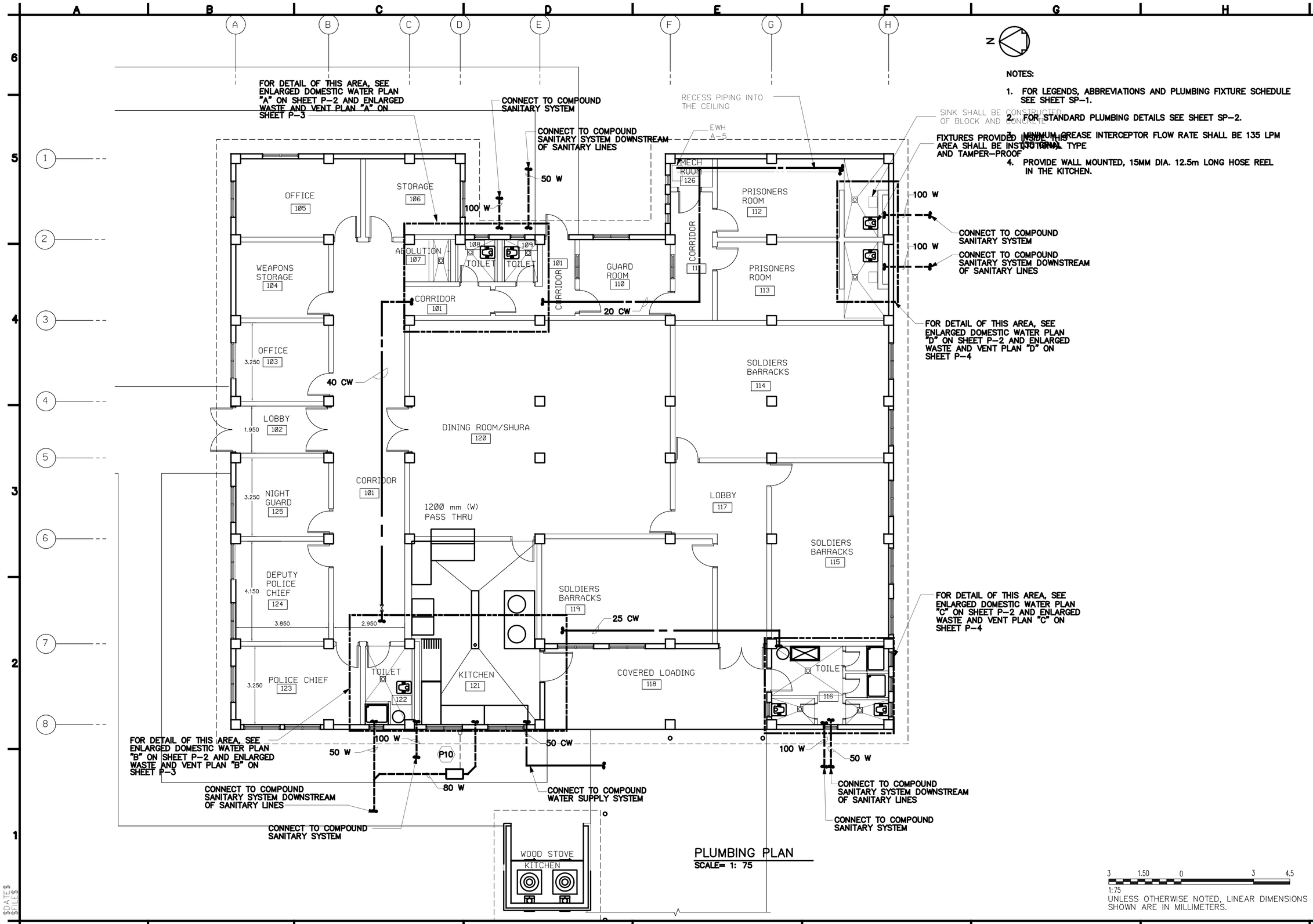


NOTES:

1. FOR LEGENDS, ABBREVIATIONS AND PLUMBING FIXTURE SCHEDULE SEE SHEET SP-1.
2. FOR STANDARD PLUMBING DETAILS SEE SHEET SP-2.
3. MINIMUM GREASE INTERCEPTOR FLOW RATE SHALL BE 135 LPM
4. PROVIDE WALL MOUNTED, 15MM DIA. 12.5m LONG HOSE REEL IN THE KITCHEN.

| SYMBOL | DESCRIPTION | DATE | APP |
|---|---|---|---|

DESIGNED BY: RMS
DATE: 4 February 2009
DWN BY: JJK
SUBMITTED BY:
CHK BY: JJK
FILE NO.: AF0607A-MP01PN

US Army Corps of Engineers
Afghanistan Engineer District

AFGHANISTAN NATIONAL POLICE (ANP) DISTRICT HEADQUARTERS COMPOUNDS – 1 STORY HQ
VARIOUS LOCATIONS, AFGHANISTAN
1 STORY BUILDING
PLUMBING PLAN

SHEET REFERENCE NUMBER:
A
P-1

$DATE$
$FILE$

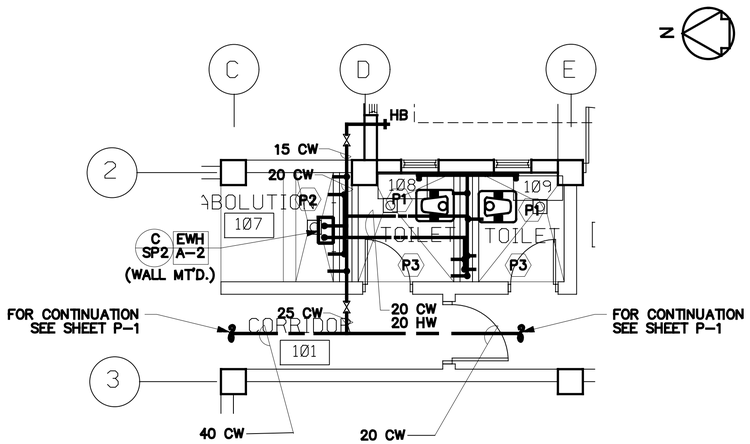


ENLARGED PLAN "A"– DOMESTIC WATER
SCALE= 1: 50

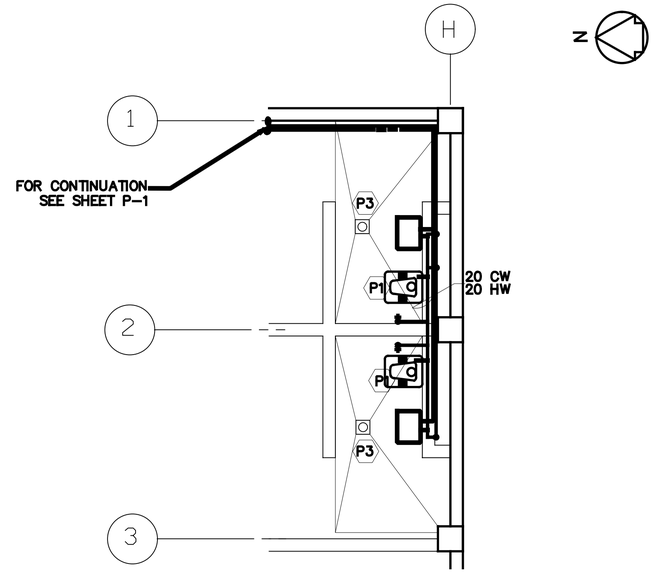


ENLARGED PLAN "D"– DOMESTIC WATER
SCALE= 1: 50

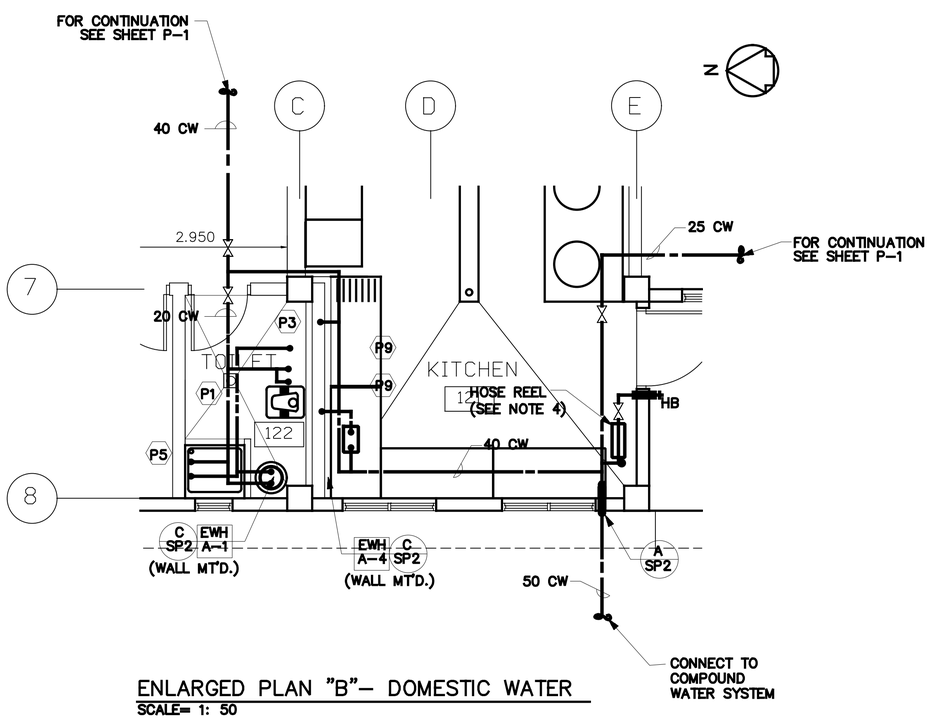


ENLARGED PLAN "B"– DOMESTIC WATER
SCALE= 1: 50

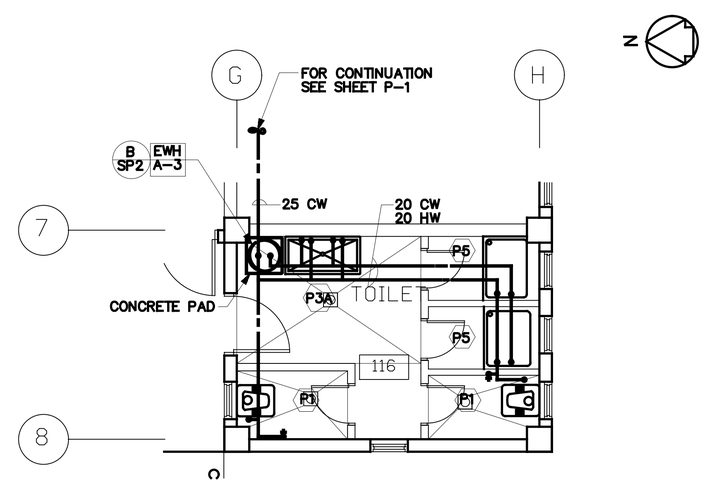


ENLARGED PLAN "C"– DOMESTIC WATER
SCALE= 1: 50

1 0 1 2 3 4
1:50

UNLESS OTHERWISE NOTED, LINEAR DIMENSIONS SHOWN ARE IN MILLIMETERS.

| SYMBOL | DESCRIPTION | DATE | APP |
|---|---|---|---|

DESIGNED BY: RMS
DATE: 4 February 2009
DWN BY: JLK
SUBMITTED BY:
CHK BY: JLK
FILE NO.: AF0607A-MP02LS

US Army Corps of Engineers
Afghanistan Engineer District

AFGHANISTAN NATIONAL ARMY (ANA) BASIC INFANTRY COURSE – 1 SECTOR (BIC)
1 STORY BUILDING
VARIOUS LOCATIONS, AFGHANISTAN
ENLARGED PLUMBING PLANS– DOMESTIC WATER

SHEET REFERENCE NUMBER:
A
P–2

$DATE$
$FILE$

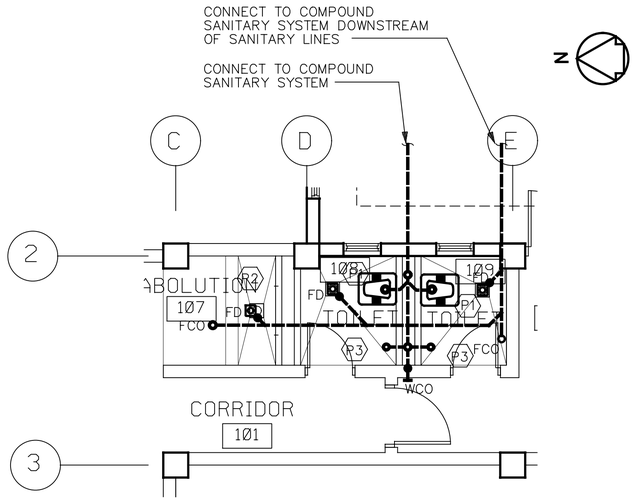


ENLARGED PLAN "A"– WASTE AND DRAINS
SCALE= 1: 50

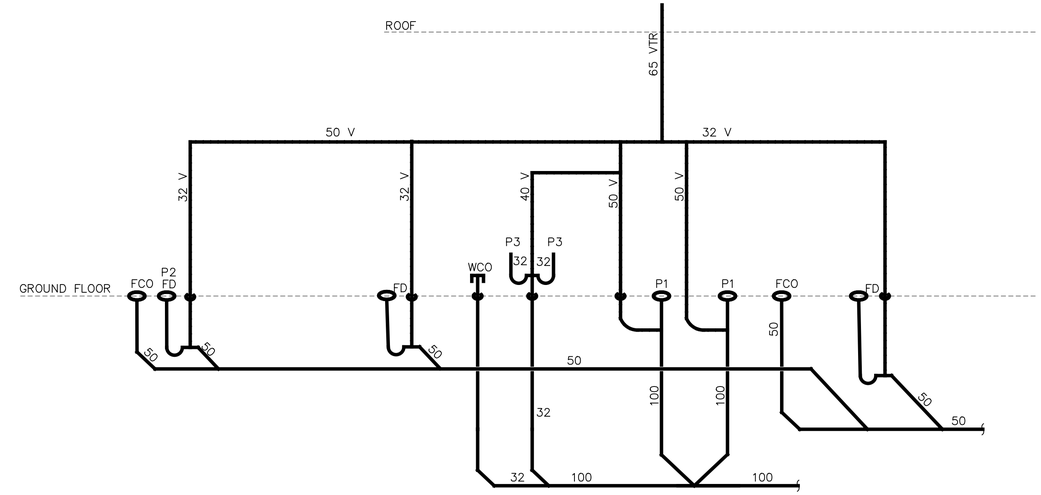


ENLARGED PLAN "A"– WASTE AND DRAIN PIPING SCHEMATIC
SCALE= NO SCALE

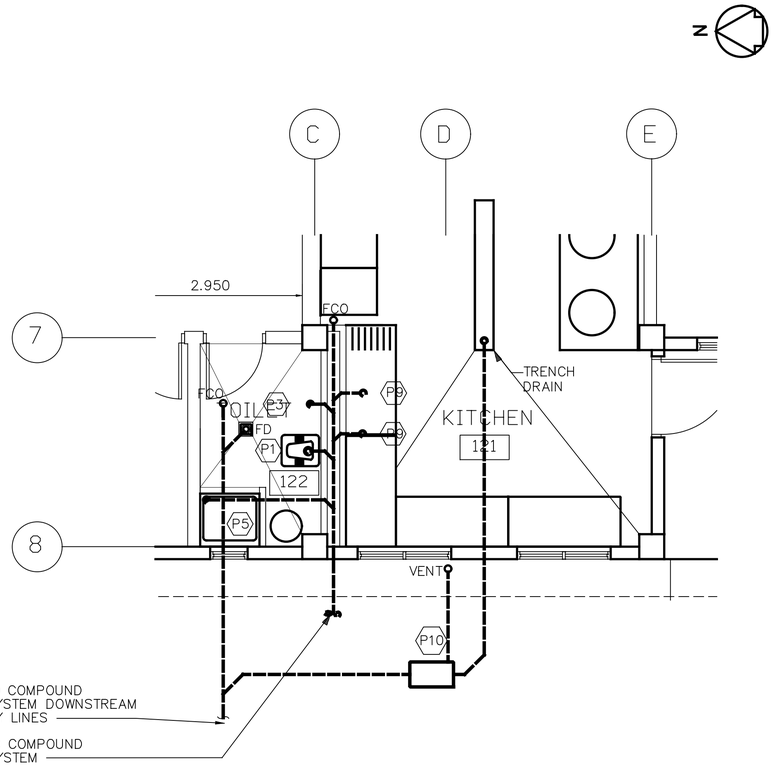


ENLARGED PLAN "B"– WASTE AND DRAINS
SCALE= 1: 50

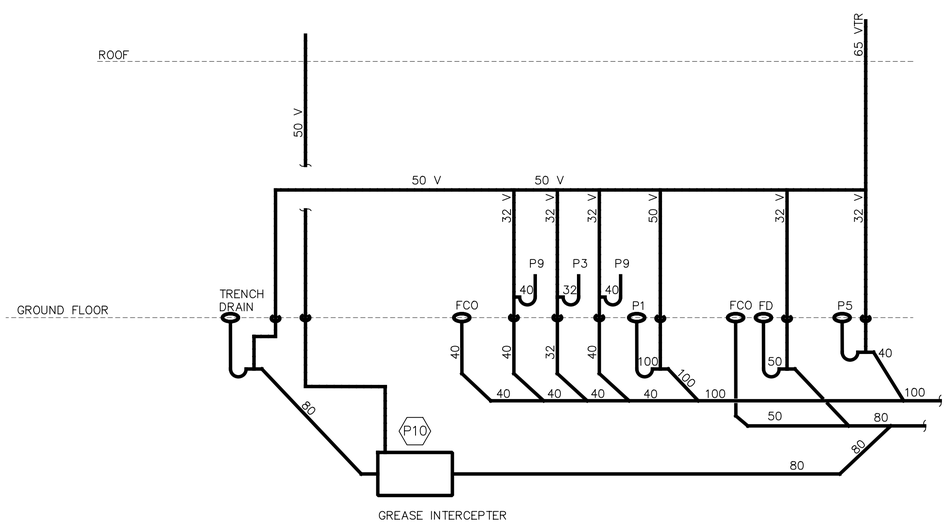


ENLARGED PLAN "B"– WASTE AND DRAIN PIPING SCHEMATIC
SCALE= NO SCALE

1 0 1 2 3 4
1:50

UNLESS OTHERWISE NOTED, LINEAR DIMENSIONS SHOWN ARE IN MILLIMETERS.

| SYMBOL | DESCRIPTION | DATE | APP |
|---|---|---|---|

DESIGNED BY: RMS
DATE: 4 February 2009
DWN BY: JJK
SUBMITTED BY:
CHK BY: JJK
FILE NO.: AF0607A–MP03LS

US Army Corps of Engineers
Afghanistan Engineer District

AFGHANISTAN NATIONAL POLICE (ANP) DISTRICT HEADQUARTERS COMPOUNDS – 1 STORY HQ
VARIOUS LOCATIONS, AFGHANISTAN
1 STORY BUILDING
ENLARGED PLUMBING PLANS– WASTE AND DRAINS

SHEET REFERENCE NUMBER:
A
P–3

$DATE$
$FILE$

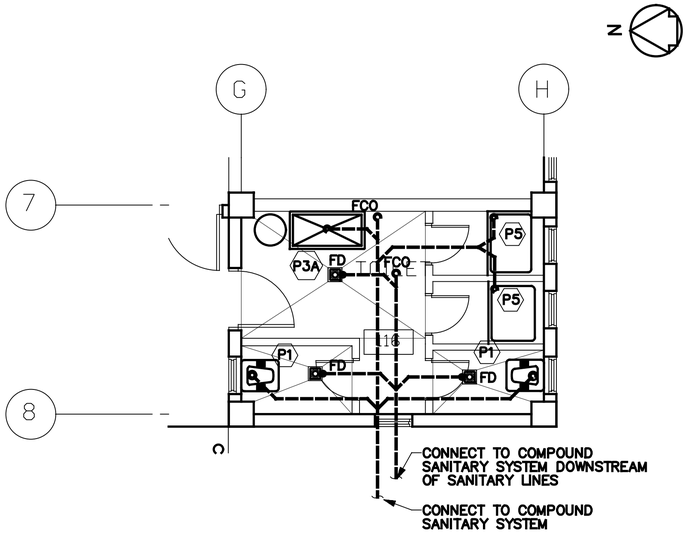


ENLARGED PLAN "C"– WASTE AND DRAINS
SCALE= 1: 50

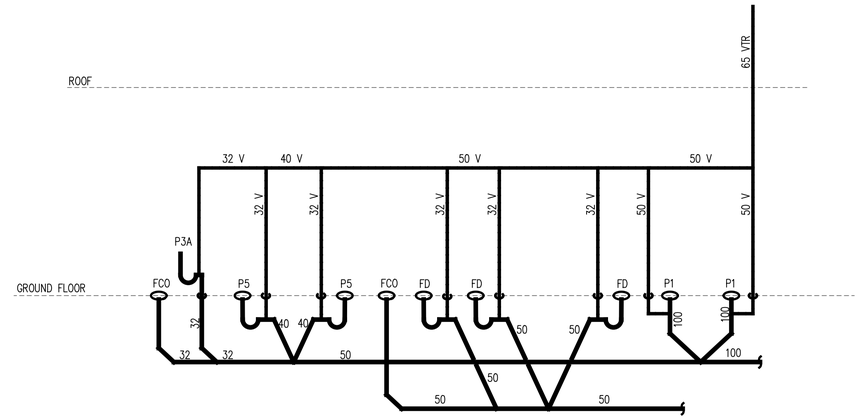


ENLARGED PLAN "C"– WASTE AND DRAIN PIPING SCHEMATIC
SCALE= NO SCALE

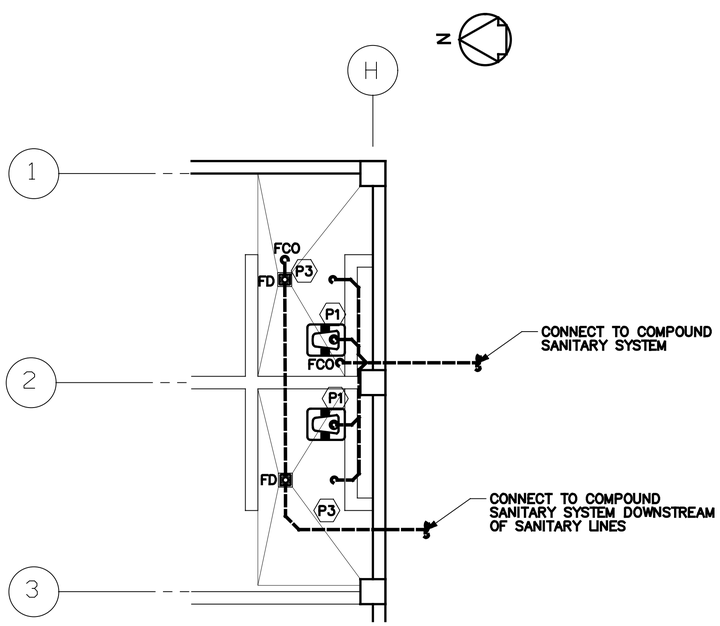


ENLARGED PLAN "D"– WASTE AND DRAINS
SCALE= 1: 50

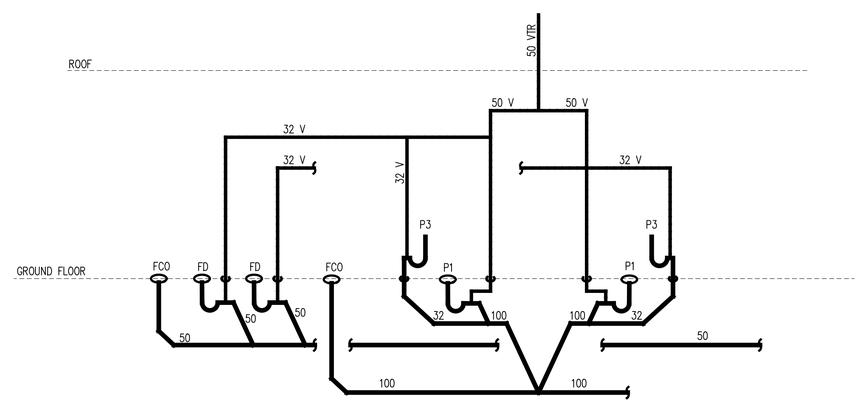


ENLARGED PLAN "D"– WASTE AND DRAIN PIPING SCHEMATIC
SCALE= NO SCALE

1 0 1 2 3 4
1:50

UNLESS OTHERWISE NOTED, LINEAR DIMENSIONS SHOWN ARE IN MILLIMETERS.

| SYMBOL | DESCRIPTION | DATE | APP |
|---|---|---|---|

DESIGNED BY: RMS
DATE: 4 February 2009
DWN BY: JMC
SUBMITTED BY:
CHK BY: RMS
FILE NO.: AF0607A–MP04LS

US Army Corps of Engineers
Afghanistan Engineer District

AFGHANISTAN NATIONAL POLICE (ANP) DISTRICT HEADQUARTERS COMPOUNDS – 1 STORY HQ
VARIOUS LOCATIONS, AFGHANISTAN
1 STORY BUILDING
ENLARGED PLUMBING PLANS– WASTE AND DRAINS

SHEET REFERENCE NUMBER:
A
P–4

$DATE$
$FILE$

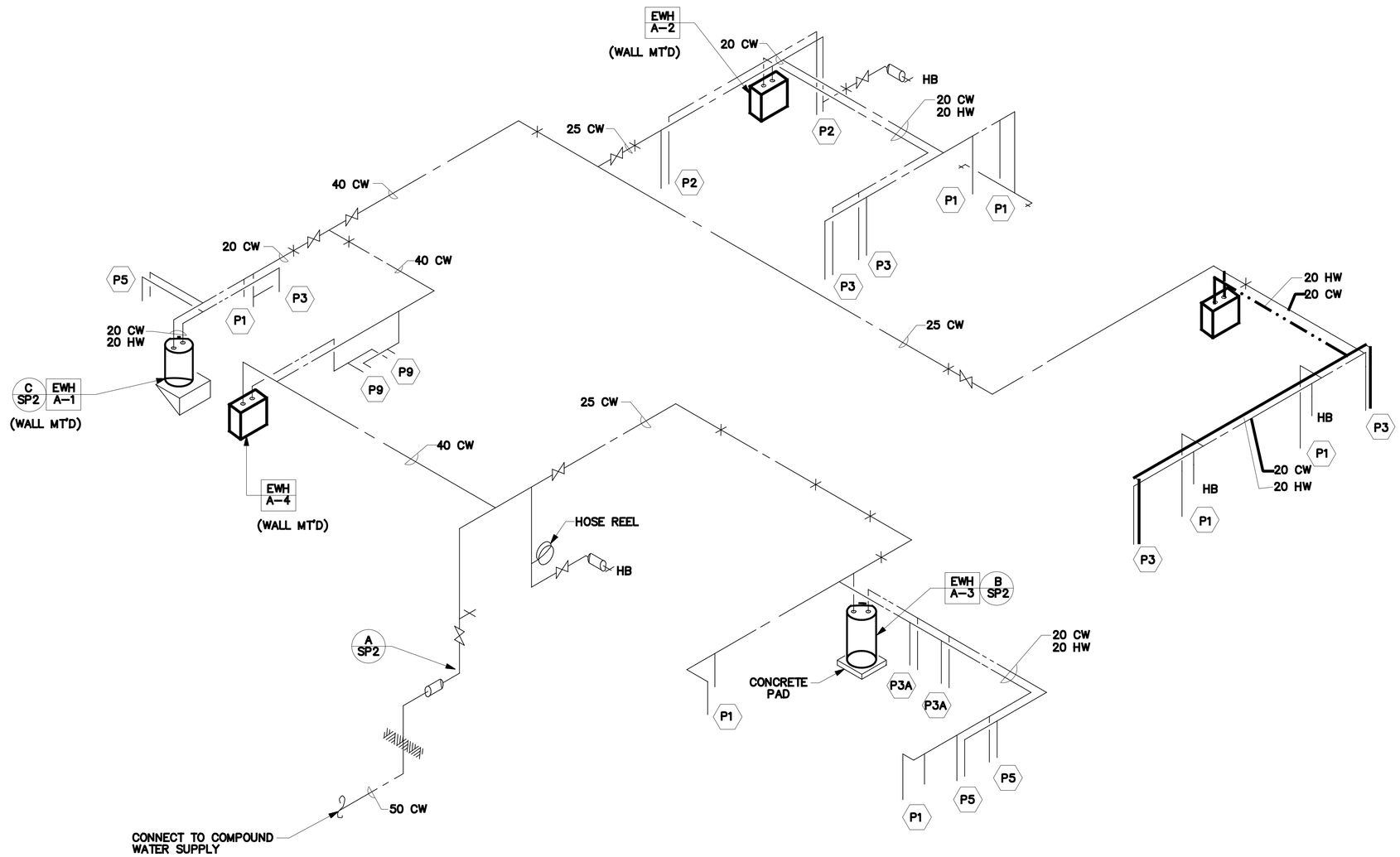


DOMESTIC WATER RISER DIAGRAM
NOT TO SCALE

| SYMBOL | DESCRIPTION | DATE | APP |
|---|---|---|---|

DESIGNED BY: RMS
DATE: 4 February 2009
DWN BY: JLK
SUBMITTED BY:
CHK BY: JLK
FILE NO.: AF0807A-MP0501

US Army Corps of Engineers
Afghanistan Engineer District

AFGHANISTAN NATIONAL POLICE (ANP) DISTRICT HEADQUARTERS COMPOUNDS – 1 STORY HQ
VARIOUS LOCATIONS, AFGHANISTAN
1 STORY BUILDING
DOMESTIC WATER RISER DIAGRAM

SHEET REFERENCE NUMBER:
A
P-5

$DATE$
$FILE$

| EWH A–X | ELECTRIC WATER HEATER SCHEDULE | | | | | | | | | |
|---|---|---|---|---|---|---|---|---|---|---|
| UNIT NUMBER | LOCATION (ROOM NO.) | TYPE | STORAGE CAPACITY (LITERS) | MINIMUM RECOVERY RATE (LITERS/HOUR) @ 55.5 C RISE | NUMBER OF ELEMENTS | ELECTRICAL REQUIREMENTS | | | | REMARKS |
| | | | | | | KW INPUT | VOLTS | PH | HZ | |
| A–1 | OFFICERS TOILET | STORAGE TANK | 75 | 39 | 1 | 2.5 | 220 | 1 | 50 | WALL MOUNTED |
| A–2 | WOMENS TOILET | TANKLESS | N/A | N/A | 1 | 9.0 | 220 | 1 | 50 | WALL MOUNTED |
| A–3 | BARRACKS TOILET | STORAGE TANK | 200 | 143 | 2 | 9.0 | 380 | 3 | 50 | FLOOR MOUNTED |
| A–4 | KITCHEN | STORAGE TANK | 200 | 143 | 2 | 12.0 | 220 | 1 | 50 | FLOOR MOUNTED |
| A–5 | CELLS | TANKLESS | N/A | N/A | 1 | 9 | 220 | 1 | 50 | WALL MOUNTED |

| SYMBOL | DESCRIPTION | DATE | APP |
|---|---|---|---|

DESIGNED BY: RMS
DWN BY: JMC
CHK BY: RMS
DATE: 4 February 2009
SUBMITTED BY:
FILE NO.: AF0607A–MP06SC

US Army Corps of Engineers
Afghanistan Engineer District

AFGHANISTAN NATIONAL POLICE (ANP) DISTRICT HEADQUARTERS COMPOUNDS – 1 STORY HQ
VARIOUS LOCATIONS, AFGHANISTAN
1 STORY BUILDING
PLUMBING SCHEDULES

SHEET REFERENCE NUMBER:
A
P–6

$DATE$
$FILE$

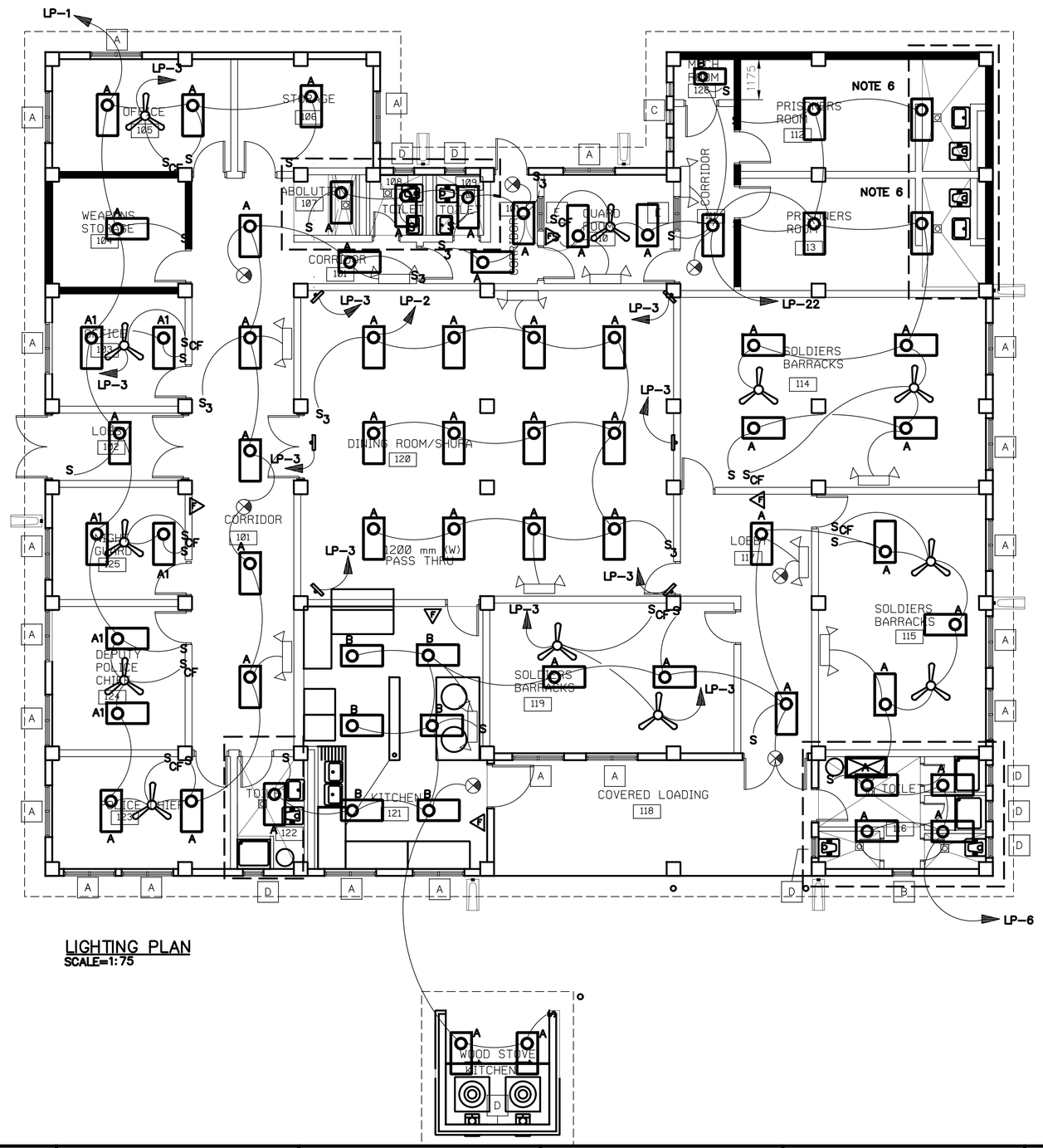


LIGHTING PLAN
SCALE=1:75

NOTES:

1. FOR LEGEND AND ABBREVIATIONS SEE DRAWING SE-1.
2. COORDINATE LOCATION OF ALL ELECTRICAL FIXTURES AND EQUIPMENT WITH ALL OTHER TRADES.
3. FOR ONE LINE DIAGRAM SEE DRAWING D/E- 1, POWER PLANT.
4. ALL WIRING SHALL BE SURFACE MOUNTED IN METAL CONDUIT.
5. FOR EXACT LOCATION OF MECHANICAL EQUIPMENT SEE MECHANICAL DRAWINGS.
6. ALL LIGHT FIXTURES IN JAIL CELLS SHALL BE TWO LAMP FLUORESCENT TYPE FIXTURES SUITABLE FOR VANDAL RESISTANCE/DETENTION CENTER. LIGHT FIXTURES SHALL WITHSTAND THE PHYSICAL ABUSE AND THE INTENT-TO-DESTROY TYPE ABUSE.
7. COORDINATE LOCATION OF ALL LIGHT FIXTURES WITH CEILING FANS.
8. ALL EMERGENCY LIGHTS AND EXIT LIGHTS SHALL BE ON UNSWITCHED.

3 1.50 0 3 4.5
1:75

UNLESS OTHERWISE NOTED, LINEAR DIMENSIONS SHOWN ARE IN MILLIMETERS.

| SYMBOL | DESCRIPTION | DATE | APP |
|---|---|---|---|

DESIGNED BY: MM
DATE: 4 February 2009
DWN BY: JLK
SUBMITTED BY:
CHK BY: JLK
FILE NO.: AF0807A-EL01PN

US Army Corps of Engineers
Afghanistan Engineer District

AFGHANISTAN NATIONAL POLICE (ANP) DISTRICT HEADQUARTERS COMPOUNDS – 1 STORY HQ
VARIOUS LOCATIONS, AFGHANISTAN

1 STORY BUILDING
LIGHTING PLAN

SHEET REFERENCE NUMBER:
A
E-1

$DATE$
$FILE$

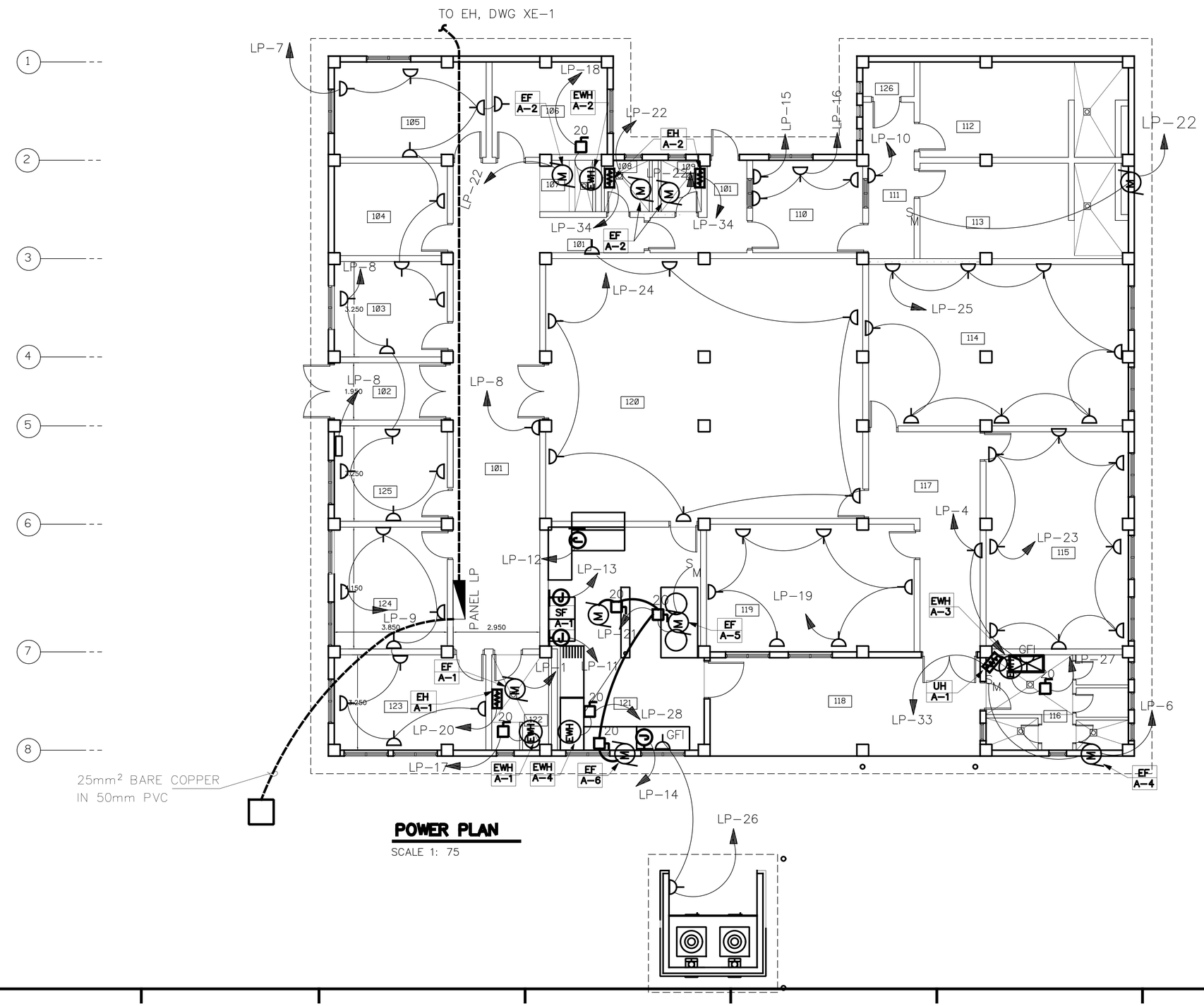


## POWER PLAN

SCALE 1: 75

NOTES:

1.? FOR LEGEND AND ABBREVIATIONS SEE DRAWING SE-1.

2.? COORDINATE LOCATION OF ALL ELECTRICAL FIXTURES AND EQUIPMENT WITH ALL OTHER TRADES.

3.? FOR ONE LINE DIAGRAM SEE DRAWING D/E-1, POWER PLANT.

4.? ALL WIRING SHALL BE SURFACE MOUNTED IN METAL CONDUIT.

5.? FOR EXACT LOCATION OF MECHANICAL EQUIPMENT SEE MECHANICAL DRAWINGS.

6.? EXHAUST FAN EF-A-1 AND EF-A-2 SHALL BE CONTROLLED BY THE LIGHT SWITCH IN THEIR RESPECTIVE ROOM.

7.? EXHAUST FAN EF-A-3, EF-A-4, AND EF-A-5 SHALL BE CONTROLLED BY A MANUAL MOTOR STARTER FROM THE LOCATION AS SHOWN ON THIS DRAWING.

8.? EXHAUST FAN EF-A-6 SHALL BE CONTROLLED BY A THERMOSTAT. REFER TO MECHANICAL DRAWING FOR LOCATION OF THE THERMOSTAT.

3 1.50 0 3 4.5
1:75

UNLESS OTHERWISE NOTED, LINEAR DIMENSIONS SHOWN ARE IN MILLIMETERS.

| SYMBOL | DESCRIPTION | DATE | APP |
|---|---|---|---|

DESIGNED BY: MM
DATE: 4 February 2009
DWN BY: JJK
SUBMITTED BY:
CHK BY: JJK
FILE NO.: AF0607A-EP02PN

US Army Corps of Engineers
Afghanistan Engineer District

AFGHANISTAN NATIONAL POLICE (ANP) DISTRICT HEADQUARTERS COMPOUNDS – 1 STORY HQ
VARIOUS LOCATIONS, AFGHANISTAN

1 STORY BUILDING
POWER PLAN

SHEET REFERENCE NUMBER:
A
E-2

$DATE$
$FILE$

PANELBOARD LP FLUSH MOUNTED MINIMUM 22,000 ASYM. A.I.C. MIN.

_____ AMP. MAIN LUGS (OR) 150 AMP. MAIN BREAKER W/ 150 AMP. TRIP

CIRCUIT BREAKER TYPE 380/220 VOLTS 3 PHASE 4 WIRE 150 AMP. BUS 50 HZ

| CKT. NO. | TRIP AMPS | NO. POLES | WIRE mm2 | GND mm2 | CONDUIT mm | LOAD SERVED | LOAD–V.A. A0 | LOAD–V.A. B0 | LOAD–V.A. C0 | LOAD–V.A. A0 | LOAD–V.A. B0 | LOAD–V.A. C0 | LOAD SERVED | CONDUIT mm | GND 2 mm | WIRE 2 mm | NO. POLES | TRIP AMPS | CKT. NO. |
|---|---|---|---|---|---|---|---|---|---|---|---|---|---|---|---|---|---|---|---|
| 1 | 20 | 1 | 4 | 4 | 20 | LIGHTING,FANS, EF–A–1 | 3230 | | | 1440 | | | LIGHTING | 20 | 4 | 4 | 1 | 20 | 2 |
| 3 | 20 | 1 | 4 | 4 | 20 | FANS | | 2000 | | | 360 | | RECEPTACLES | 20 | 4 | 4 | 1 | 20 | 4 |
| 5 | 20 | 1 | | | | SPARE | | | | | | 3415 | LIGHTING, FANS,EF–A–4 | 20 | 4 | 4 | 1 | 20 | 6 |
| 7 | 20 | 1 | 4 | 4 | 20 | RECEPTACLES | 1440 | | | 1260 | | | RECEPTACLES | 20 | 4 | 4 | 1 | 20 | 8 |
| 9 | 20 | 1 | 4 | 4 | 20 | RECEPTACLES | | 1440 | | | 180 | | RECEPTACLE | 20 | 4 | 4 | 1 | 20 | 10 |
| 11 | 20 | 1 | 4 | 4 | 20 | JB FOR REFRIGERATOR/FREEZER | | | 2000 | | | 2000 | JB FOR REFRIGERATOR/FREEZER | 20 | 4 | 4 | 1 | 20 | 12 |
| 13 | 20 | 1 | 4 | 4 | 20 | JB FOR REFRIGERATOR/FREEZER | 2000 | | | 2000 | | | JB FOR REFRIGERATOR/FREEZER | 20 | 4 | 4 | 1 | 20 | 14 |
| 15 | 20 | 1 | 4 | 4 | 20 | RECEPTACLES | | 500 | | | 540 | | RECEPTACLES | 20 | 4 | 4 | 1 | 20 | 16 |
| 17 | 20 | 1 | 4 | 4 | 20 | ELECTRIC WATER HEATER A–1 | | | 2500 | | | 9000 | ELECTRIC WATER HEATER A–2 | 20 | 6 | 10 | 1 | 50 | 18 |
| 19 | 20 | 1 | 4 | 4 | 20 | RECEPTACLES | 1080 | | | 1550 | | | EH–A–1 | 20 | 4 | 4 | 1 | 20 | 20 |
| 21 | 20 | 1 | 4 | 4 | 20 | EXHAUST FAN EF–A–5, A–6 | | 1585 | | | 2800 | | LIGHTING,FANS,EF–A–2,EF–A–3 | 20 | 4 | 4 | 1 | 20 | 22 |
| 23 | 20 | 1 | 4 | 4 | 20 | RECEPTACLES | | | 1440 | | | 1260 | RECEPTACLES | 20 | 4 | 4 | 1 | 20 | 24 |
| 25 | 20 | 1 | 4 | 4 | 20 | RECEPTACLES | 1440 | | | 720 | | | RECEPTACLES | 20 | 4 | 4 | 1 | 20 | 26 |
| 27 | 20 | 3 | 4 | 4 | 20 | EWH–A–3 | | 3000 | | | 12000 | | ELECTRIC WATER HEATER A–4 | 20 | 6 | 16 | 1 | 70 | 28 |
| 29 | ↓ | ↓ | ↓ | ↓ | ↓ | ↓ | | | 3000 | | | | SPARE | | | | 1 | 20 | 30 |
| 31 | ↓ | ↓ | ↓ | ↓ | ↓ | ↓ | 3000 | | | | | | SPARE | | | | 1 | 20 | 32 |
| 33 | 20 | 1 | 4 | 4 | 20 | UH–A–1 | | 3000 | | | 2080 | | EH–A–2 | 20 | 4 | 4 | 1 | 20 | 34 |
| 35 | 20 | 1 | | | | SPARE | | | | | | | SPARE | | | | 1 | 20 | 36 |
| 37 | 20 | 1 | | | | SPARE | | | | | | | SPARE | | | | 1 | 20 | 38 |
| 39 | 20 | 1 | | | | SPARE | | | | | | | SPACE | | | | | | 40 |
| 41 | | | | | | SPACE | | | | | | | SPACE | | | | | | 42 |
| | | | | | | | 12190 | 11525 | 8940 | 6970 | 17960 | 15675 | | | | | | | |

TOTAL CONN. LOAD 73.26 KVA. 85 % DEMAND = ESTIMATED DEMAND LOAD: 62.27 kVA

TOTAL CONN. LOAD PER PHASE (KVA): A0 19.16 B0 29.49 C0 24.62

SUPPLIED FROM POWER PLANT SWITCHBOARD

NOTES:

1.? FOR LEGEND AND ABBREVIATIONS SEE DRAWING SE–1.

2.? CONTRACTOR SHALL CONFIRM THAT ALL CIRCUIT RATINGS ARE BASED ON THE ACTUAL NAMEPLATE OF THE SUPPLIED EQUIPMENT.

UNLESS OTHERWISE NOTED, LINEAR DIMENSIONS SHOWN ARE IN MILLIMETERS.

SYMBOL DESCRIPTION DATE APP

DESIGNED BY: mm
DATE: 4 February 2009
DWN BY: JLK
SUBMITTED BY:
CHK BY: JLK
FILE NO.: AF0607A–EL04SC

US Army Corps of Engineers
Afghanistan Engineer District

AFGHANISTAN NATIONAL POLICE (ANP) DISTRICT HEADQUARTERS COMPOUNDS – 1 STORY HQ
VARIOUS LOCATIONS, AFGHANISTAN
1 STORY BUILDING
PANEL SCHEDULE

SHEET REFERENCE NUMBER:
A
E–3

$DATE$
$FILE$

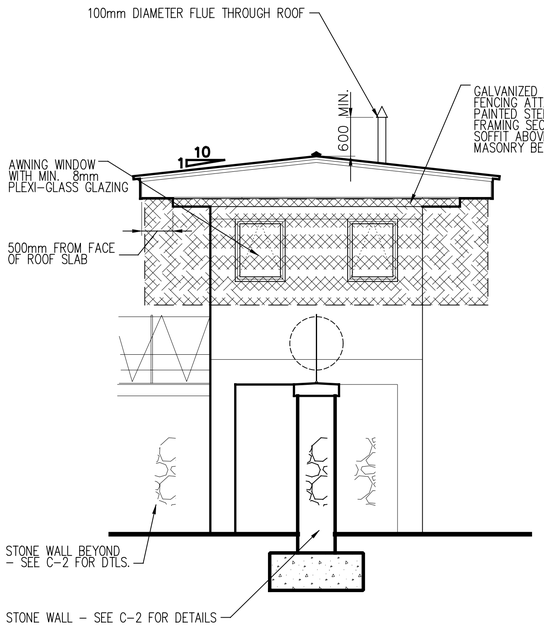


3 A-1 A-1 **ELEVATION**
SCALE= 1:50

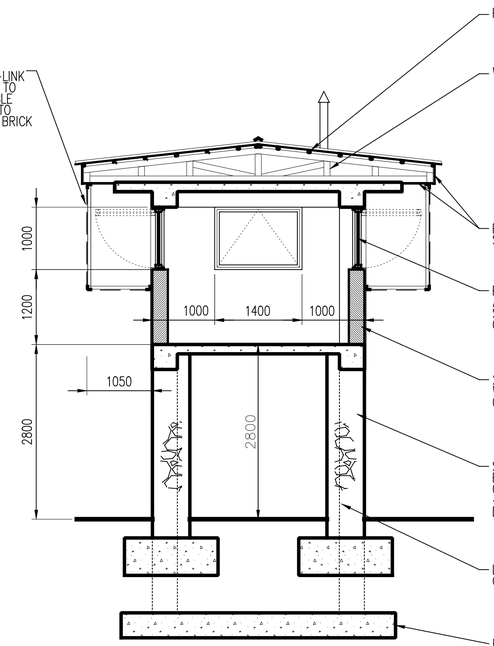


2 A-1 A-1 **SECTION**
SCALE= 1:50

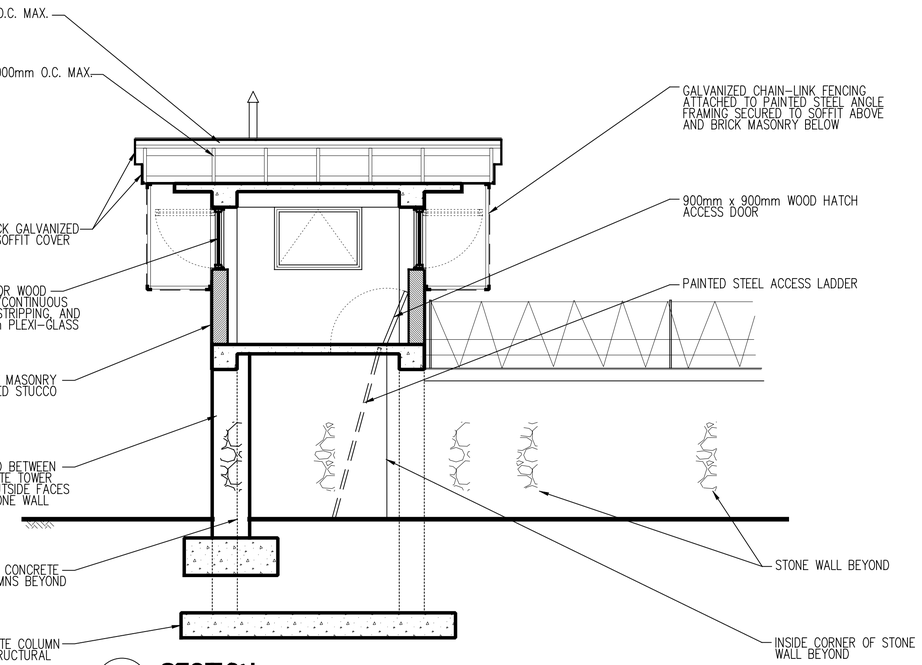


1 A-1 A-1 **SECTION**
SCALE= 1:50

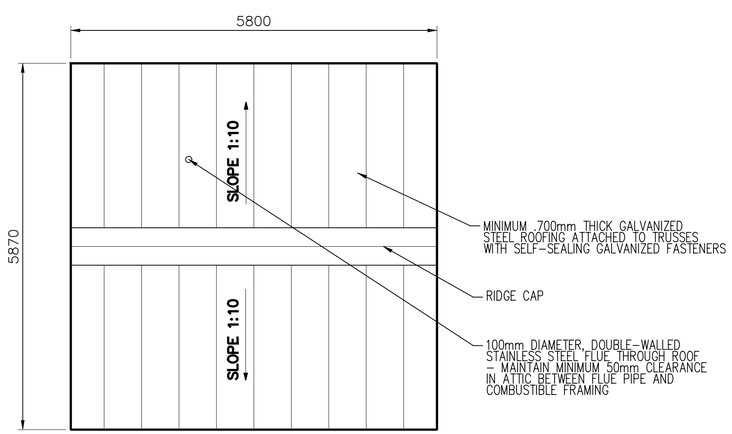


**ROOF PLAN**
SCALE= 1:50

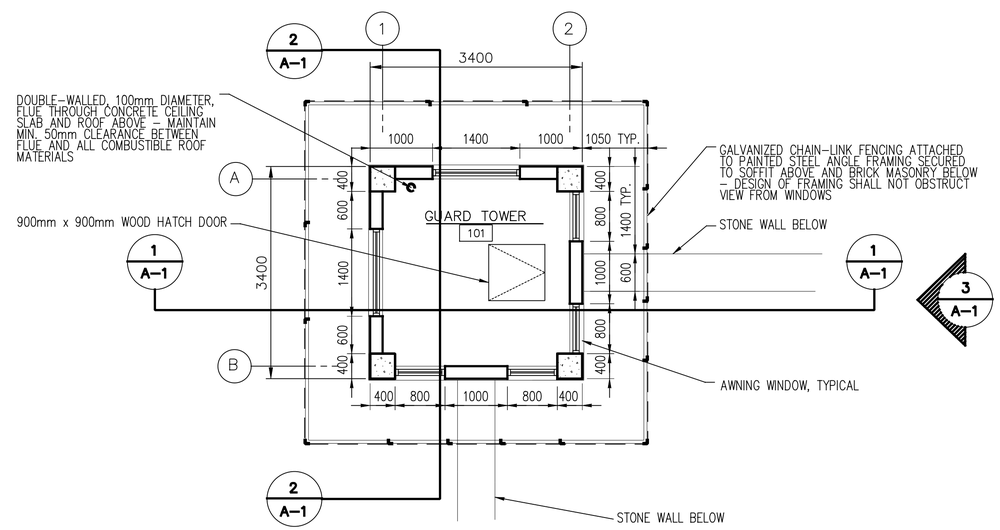


**FIRST FLOOR PLAN**
SCALE= 1:50

UNLESS OTHERWISE NOTED, LINEAR DIMENSIONS SHOWN ARE IN MILLIMETERS.

| SYMBOL | DESCRIPTION | DATE | APP |
|---|---|---|---|

DESIGNED BY: JLK
DATE: 4 February 2009
DWN BY: JLK
SUBMITTED BY:
CHK BY: JLK
FILE NO.: AF06078-AR01PN

US Army Corps of Engineers
Afghanistan Engineer District

AFGHANISTAN NATIONAL POLICE (ANP) DISTRICT HEADQUARTERS COMPOUNDS - 1 STORY HQ
VARIOUS LOCATIONS, AFGHANISTAN
GUARD TOWER
FLOOR PLAN, SECTION ELEVATION AND ROOF PLAN

SHEET REFERENCE NUMBER:
B
A-1

$DATE$
$FILE$

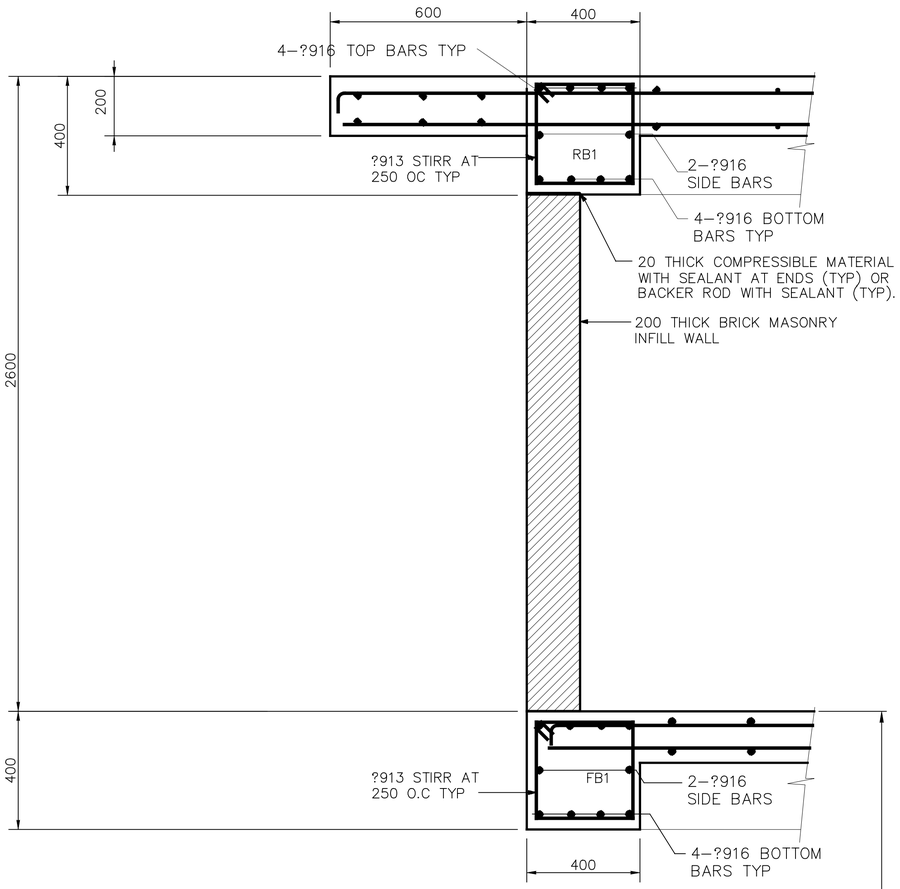


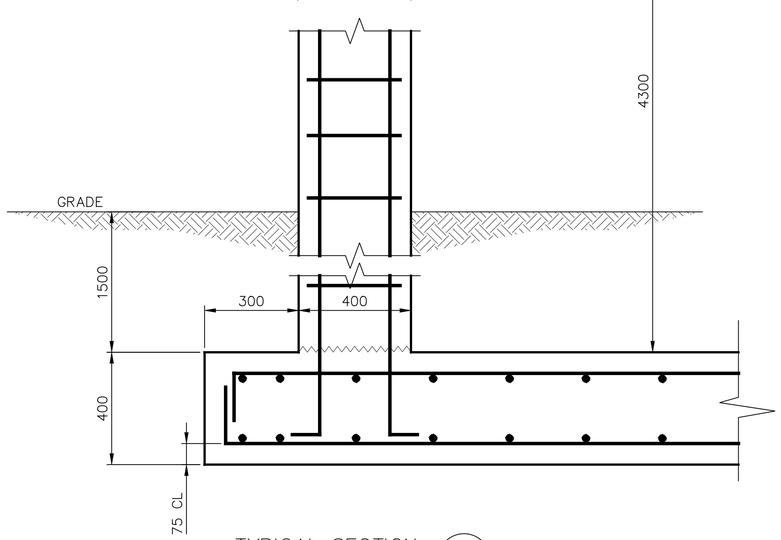


TYPICAL SECTION (A–A, S–1 | S–1)
SCALE=NTS

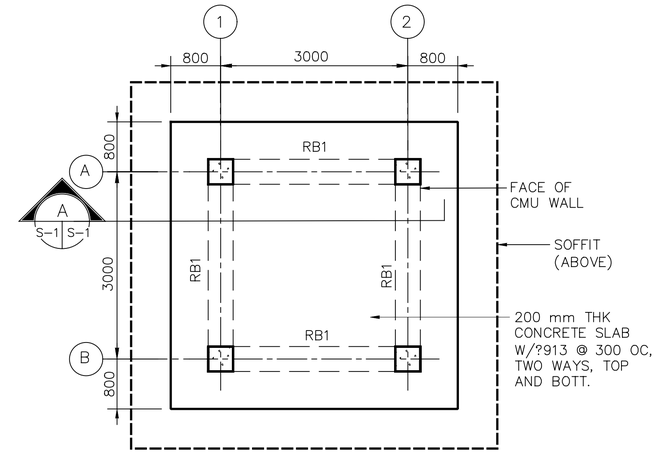


ROOF FRAMING PLAN
SCALE= 1:50

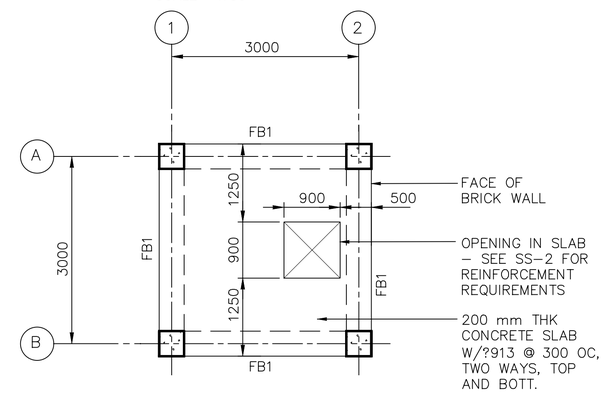


FIRST FLOOR PLAN
SCALE= 1:50

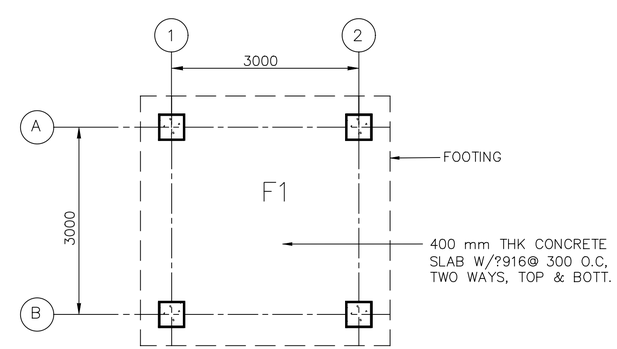


FOUNDATION AND SLAB PLAN
SCALE= 1:50

## GENERAL NOTES

1.?DESIGN LOADS (SERVICE)?

LIVE LOADS:?
ROOF: ?1.0 KPA (20 PSF) ?
OTHERS: ?4.8 KPA (100 PSF) ???
8.9 KN (2.0 K)
CONCENTRATED LOAD?

WIND LOADS PER IBC–2003:?
USING A "3–SECOND" WIND VELOCITY OF 125 KPH ?
EXPOSURE C AND IMPORTANCE FACTOR I=1.0?

EARTHQUAKE LOADS PER IBC–2003:?
USING A SEISMICITY: Ss=1.65g AND $S_1$ =0.75g

2.?MATERIALS:?

CONCRETE: 28 MPa (4 KSI) ??
CYLINDER STRENGTH AT 28 DAYS?

REINFORCING: ASTM A615 GRADE 60 (60 KSI)

3.?WORK THESE STRUCTURAL DRAWINGS WITH THE STANDARD–DETAILS DRAWINGS.

4.?A RELATIVE (DATUM) FINISH FLOOR ELEVATION EQUAL TO 0.00M IS USED AS REFERENCE ELEVATION FOR ALL STRUCTURAL DRAWINGS. COORDINATE WITH SITE SPECIFIC GRADING PLAN TO BE PROVIDED BY CONTRACTOR.

5.?FOUNDATIONS ARE DESIGNED USING AN ALLOWABLE BEARING PRESSURE OF 0.75 KG/SQ. CM (1500 PSF), AND BOTTOM OF FOOTINGS ARE PLACED AS SHOWN ON DRAWINGS. GEOTECHNICAL INVESTIGATION SHALL CONFIRM BEARING CAPACITY TO BE NO LESS THAN 0.75 KG/SQ CM. IF GEOTECHNICAL INVESTIGATION SHOWS LESS THAN 0.75 KG/SQ CM THE CONTRACTOR SHALL REDESIGN FOOTINGS BASED ON THE GEOTECHNICAL INVESTIGATION. SEE SPECIFICATION 01015 PARAGRAPH, GEOTECHNICAL, FOUNDATION AND SURVEY.

6.?FOR BUILDING NORTH ORIENTATION SEE SHEET C–1.

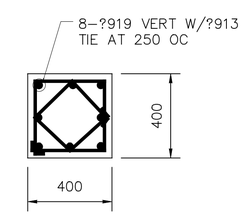


TYP COLUMN
REINFORCING DETAIL

1 0 1 2 3 4
1:50

UNLESS OTHERWISE NOTED, LINEAR DIMENSIONS SHOWN ARE IN MILLIMETERS.

| SYMBOL | DESCRIPTION | DATE | APP |
|---|---|---|---|

DESIGNED BY: JK
DATE: 4 February 2009
DWN BY: RG
SUBMITTED BY:
CHK BY: JK
FILE NO.: AF06078–S801PN

US Army Corps of Engineers
Afghanistan Engineer District

AFGHANISTAN NATIONAL POLICE (ANP) DISTRICT HEADQUARTERS COMPOUNDS – 1 STORY HQ
VARIOUS LOCATIONS, AFGHANISTAN
GUARD TOWER
FOUNDATION AND SLAB PLAN
ROOF FRAMING PLAN

SHEET REFERENCE NUMBER:
B
S–1

$DATE$
$FILE$

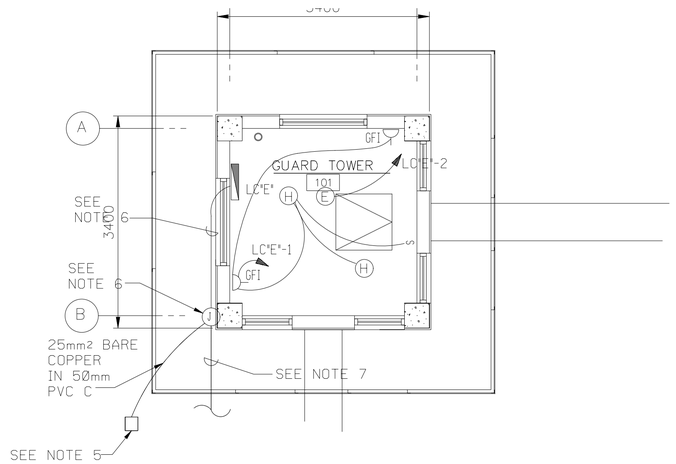


## LIGHTING & POWER

NOT TO SCALE

LOAD CENTER "E" GUARD TOWER #1, 2, 3, & 4

40 AMP MAIN CIRCUIT BREAKER, 220V, 1 PH, 2W, 50 HZ, 100A BUS, 10000 AIC

| CKT. NO. | TRIP AMPS | NO. POLES | WIRE $MM^2$ | GND $MM^2$ | CONDUIT MM | LOAD SERVED | LOAD-V.A. |
|---|---|---|---|---|---|---|---|
| 1 | 20 | 1 | 4 | 4 | 20 | LIGHTING & RECEPTACLES | 560 |
| 2 | 20 | 1 | 4 | 4 | 20 | SPOT LIGHT, 1000W | 1000 |
| 3 | 20 | 1 | | | | SPARE | |
| 4 | 20 | 1 | | | | SPARE | |
| 5 | | | | | | SPACE | |
| 6 | | | | | | SPACE | |
| 7 | | | | | | SPACE | |
| 8 | | | | | | SPACE | |
| | | | | | | TOTAL CONN. LOAD | 1560 |

TOTAL CONN. LOAD 1.56 KVA.

100 %DEMAND = EST. DEMAND LOAD: 1.56 SERVED FROM: PPSB

NOTES:

1. FOR LEGEND, ABBREVIATIONS AND LIGHT FIXTURE SCHEDULE SEE DRAWING SE-1.
2. COORDINATE LOCATION OF ALL ELECTRICAL DEVICES AND EQUIPMENT WITH ALL OTHER TRADES.
3. ALL WIRING SHALL BE IN CONCEALED OR SURFACE MOUNTED METAL CONDUIT.
4. PLAN IS TYPICAL FOR ALL GUARD TOWERS 1-4.
5. FOR GROUNDING ROD ACCESS BOX DETAIL SEE SHEET SE-2.
6. PROVIDE 50 METAL C WITH TWO 16mm2 COPPER CONDUCTORS AND 16mm2 COPPER GROUNDING CONDUCTOR TO JUNCTION BOX. FOR JUNCTION BOX DETAIL SEE SHEET SE-5.
7. FOR CONTINUATION TO SECONDARY DISTRIBUTION SYSTEM SEE DRAWING XE-1.
8. PROVIDE MANUFACTURER SUPPLIED RED, BLUE, AND BLACK LAMPS.
9. FOR BUILDING NORTH ORIENTATION SEE SHEET C-1.

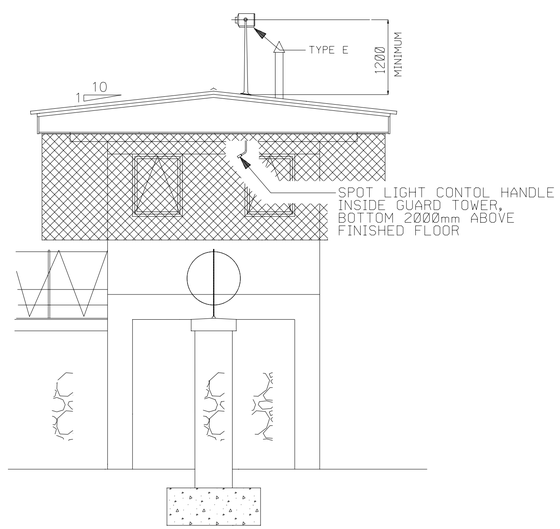


## SPOTLIGHT MOUNTING DETAIL

NOT TO SCALE

UNLESS OTHERWISE NOTED, LINEAR DIMENSIONS SHOWN ARE IN MILLIMETERS.

| SYMBOL | DESCRIPTION | DATE | APR |
|---|---|---|---|

DESIGNED BY: JLK
DWN BY: JLK
CHK BY: JLK
DATE: 4 February 2009
SUBMITTED BY:
FILE NO.: AR0607B-EL01PN

US Army Corps of Engineers
Afghanistan Engineer District

AFGHANISTAN NATIONAL POLICE (ANP) DISTRICT HEADQUARTERS COMPOUNDS – 1 STORY HQ
VARIOUS LOCATIONS, AFGHANISTAN
GUARD TOWERS

SHEET REFERENCE NUMBER:
B
E-1

$DATE$
$FILE$

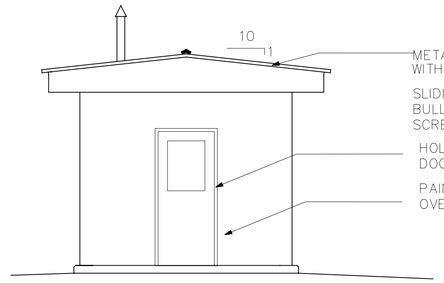


ELEVATION
SCALE=1:50

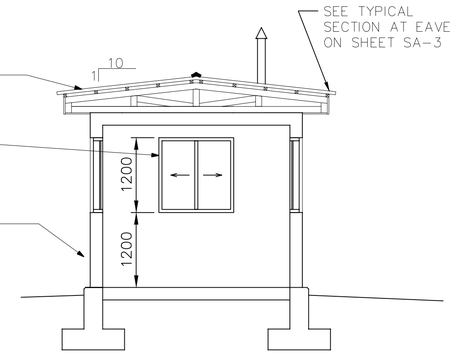


SECTION
SCALE=1:50

GENERAL NOTES:

1. ALL CMU WALLS AND CEILINGS SHALL BE PLASTERED AND PAINTED.
2. CONTRACTOR SHALL CONFIGURE THE METAL ROOFING AS SHOWN AND CONSTRUCT WITH APPROPRIATE WOOD FRAMING.
3. FLOOR SHALL BE SEALED CONCRETE.
4. PROVIDE WINDOW UNITS MEETING UL 752, LEVEL 5, BUT NO LESS THAN 16 MM LAMINATED SINGLE GLAZED. THIS STANDARD SHALL APPLY TO ALL WINDOW UNITS IN THE GUARD SHACK.

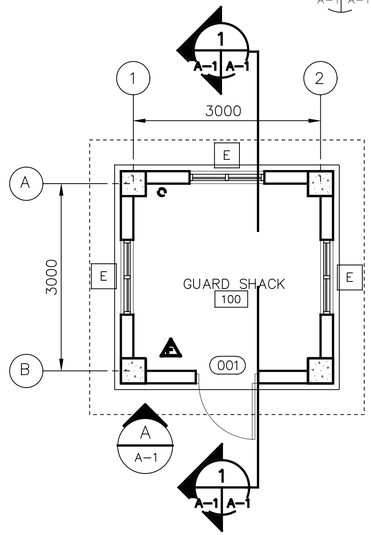


FIRST FLOOR PLAN
SCALE=1:50

PROVIDE PORTABLE FIRE EXTINGUISHERS, ABC DRY CHEMICAL 4A:60B:C

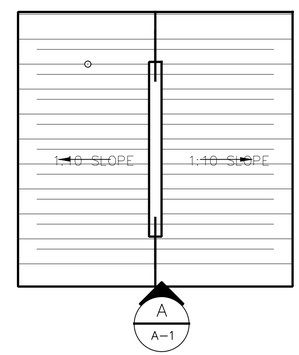


ROOF PLAN
SCALE=1:50

## ROOM FINISH SCHEDULE LEGEND

FLOOR TYPE
F1 SEALED CONCRETE

FLOOR COLOR
1 SEALED CONCRETE – NATURAL FINISH

WALL TYPE
W1 PAINTED CMU

WALL COLOR
20 PAINTED CMU –HEMPEL, 1005–Y50R–25400,

CEILING TYPE
C1 PAINTED EXPOSED STRUCTURE

CEILING COLOR
30 PAINTED EXPOSED STRUCTURE – HEMPEL, 0502–Y–15420, OFF WHITE

## ROOM FINISH SCHEDULE

| ROOM NO. | ROOM NAME | FLOOR | | BASE | | WALLS | | CEILING | | | REMARKS |
|---|---|---|---|---|---|---|---|---|---|---|---|
| | | MAT'L. | COLOR | MAT'L. | COLOR | MAT'L. | COLOR | MAT'L. | COLOR | HEIGHT | |
| 101 | GUARD SHACK | F1 | 1 | -- | -- | W1 | 20 | C1 | 30 | 3400 | |

## DOOR SCHEDULE

| DOOR | | | | | | | FRAME | | | | FIRE LABEL | HDW SET | REMARKS |
|---|---|---|---|---|---|---|---|---|---|---|---|---|---|
| NO. | LOCATION | TYPE | MAT'L | WIDTH | HEIGHT | THICK | HEAD | JAMB | SILL | MAT"L | | | |
| 001 | GUARD SHACK | F | HM | 1800 | 2150 | 45 | H-1/SA2 | J-1/SA2 | S-1/SA2 | HM | -- | 2 | |
| | | | | | | | | | | | | | |

ROOM FINISH SCHEDULE NOTES:

1. ALL WALL PENETRATIONS SHALL BE SEALED TO PROVIDE A NEAT APPEARANCE. PENETRATIONS OF EXTERIOR WALLS SHALL BE SEALED TO BE WATER–TIGHT.
2. SEALANTS SHALL MATCH THE COLOR OF ADJACENT SURFACES.

1 0 1 2 3 4
1:50

UNLESS OTHERWISE NOTED, LINEAR DIMENSIONS SHOWN ARE IN MILLIMETERS.

| SYMBOL | DESCRIPTION | DATE | APP |
|---|---|---|---|

DESIGNED BY: YSK
DATE: 4 February 2009
DWN BY: JSG
SUBMITTED BY:
CHK BY: TBD
FILE NO.:

US Army Corps of Engineers
Afghanistan Engineer District

AFGHANISTAN NATIONAL POLICE (ANP) DISTRICT HEADQUARTERS COMPOUNDS – 1 STORY HQ
VARIOUS LOCATIONS, AFGHANISTAN

FLOOR PLANS AND ELEVATIONS

SHEET REFERENCE NUMBER:
A–1

$DATE$
$FILE$

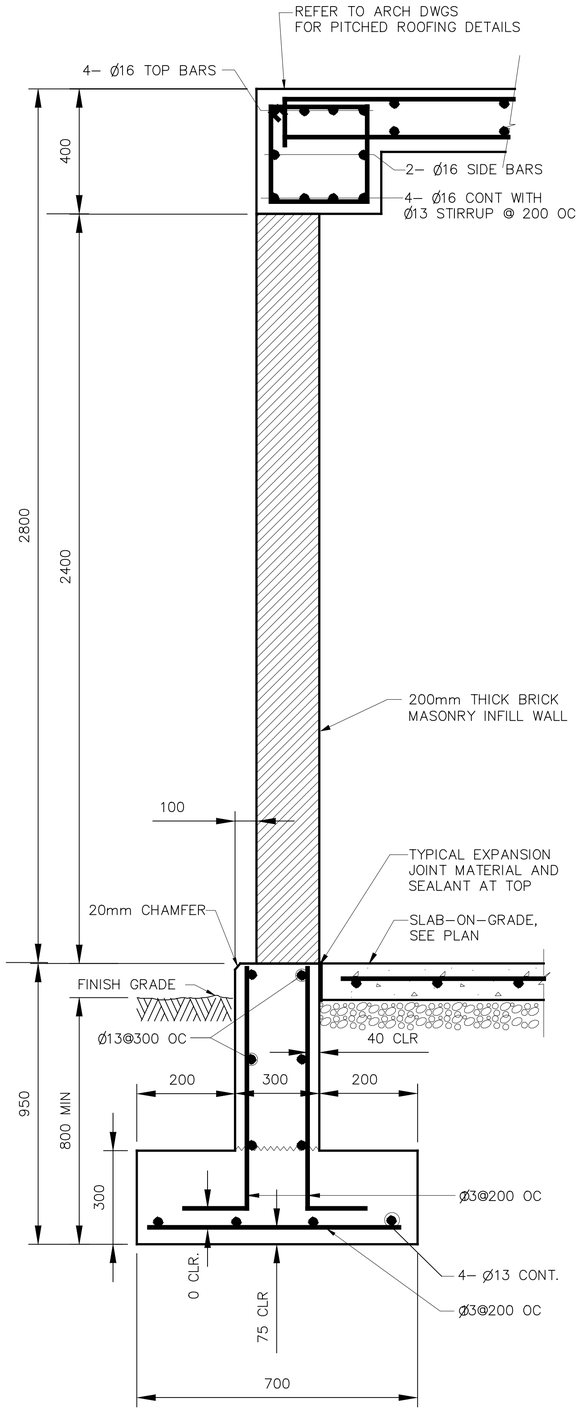


## TYP EXTERIOR WALL SECTION

NOT TO SCALE

1 S–1 S–1

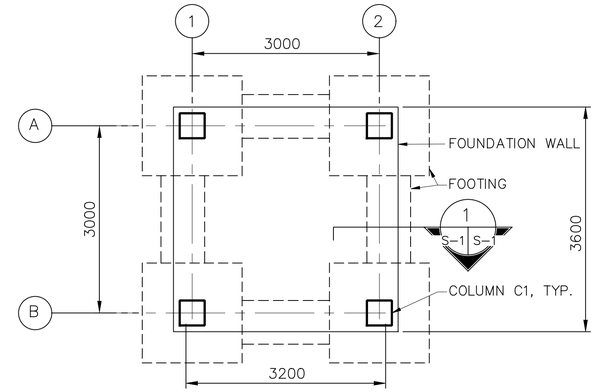


ALL SLABS ON GRADE (TYP): 150 MM THICK CONC SLAB ON GRADE WITH % %870913 AT 300 MM ON CENTER TWO WAYS. 100mm THK CAPILLARY WATER BARRIER ON 95% COMPACTED GROUND.

## FOUNDATION AND SLAB PLAN

**SCALE= 1:50**

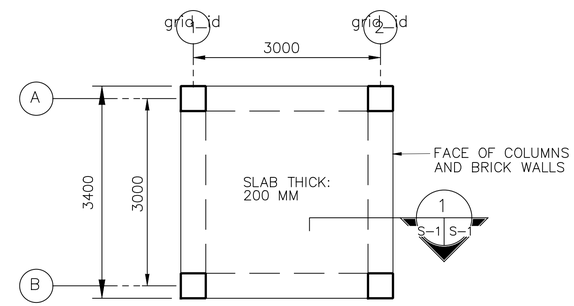


TOP BAR: Ø13@300 ON CENTER TWO WAYS
BOTTOM BAR: Ø13@300 ON CENTER TWO WAYS.

## ROOF FRAMING AND SLAB PLAN

**SCALE= 1:50**

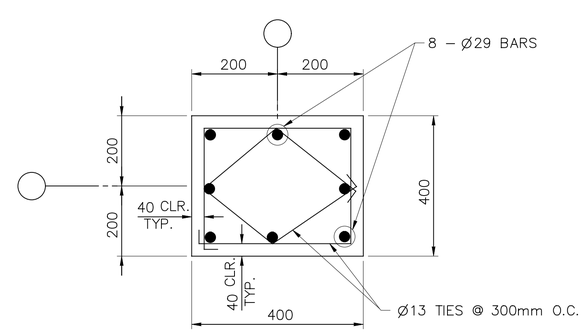


**C1**

**COLUMN TYPE**

NOTE: SEE WELL HOUSE (E) STRUCTURAL PLATES FOR COLUMN DETAILS AND SCHEDULES

## GENERAL NOTES

1. DESIGN LOADS (SERVICE)

   LIVE LOADS:

   ROOF: 1.0 KPA (20 PSF)
   OTHERS: 4.8 KPA (100 PSF)
   8.9 KN (2.0 K) CONCENTRATED LOAD

   WIND LOADS PER IBC–2003

   USING A "3–SECOND" WIND VELOCITY OF 125 KPH
   EXPOSURE C AND IMPORTANCE FACTOR I=1.0

   EARTHQUAKE LOADS PER IBC–2003:

   USING A SEISMICITY: Ss=1.65g AND $S_1$=0.75g

2. MATERIALS:

   CONCRETE: 28 MPa (4 KSI)
   CYLINDER STRENGTH AT 28 DAYS

   REINFORCING: ASTM A615 GRADE 60 (60 KSI)

3. WORK THESE STRUCTURAL DRAWINGS WITH THE STANDARD–DETAILS DRAWINGS.

4. A RELATIVE (DATUM) FINISH FLOOR ELEVATION EQUAL TO 0.00 M. IS USED AS REFERENCE ELEVATION FOR ALL STRUCTURAL DRAWINGS. COORDINATE WITH SITE SPECIFIC GRADING PLAN TO BE PROVIDED BY CONTRACTOR.

5. FOUNDATIONS ARE DESIGNED USING AN ALLOWABLE BEARING PRESSURE OF 0.75 KG/SQ. CM (1500 PSF), AND BOTTOM OF FOOTINGS ARE PLACED AS SHOWN ON DRAWINGS. GEOTECHNICAL INVESTIGATION SHALL CONFIRM BEARING CAPACITY TO BE NO LESS THAN 0.75 KG/SQ CM. IF GEOTECHNICAL INVESTIGATION SHOWS LESS THAN 0.75 KG/SQ CM THE CONTRACTOR SHALL REDESIGN FOOTINGS BASED ON THE GEOTECHNICAL INVESTIGATION. SEE SPECIFICAITON 01015 PARAGRAPH, GEOTECHNICAL, FOUNDATION AND SURVEY.

6. FOR BUILDING NORTH ORIENTATION SEE SHEET C–1.

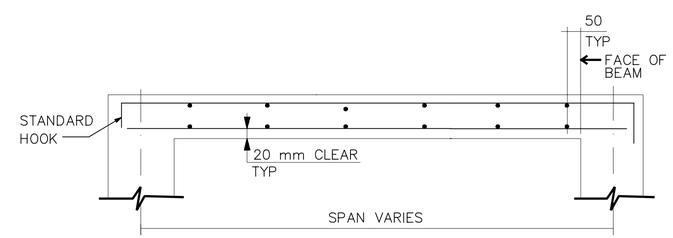


## TYPICAL SECTION FOR STRUCTURAL SLABS

NOT TO SCALE

1 0 1 2 3 4
1:50

UNLESS OTHERWISE NOTED, LINEAR DIMENSIONS SHOWN ARE IN MILLIMETERS.

| REVISIONS | | | |
|---|---|---|---|
| * | SYMBOL | DESCRIPTION | DATE | APP |
| | | | 03/04/2007 | |

DESIGNED BY: JK
DATE: 4 February 2009
DWN BY: JK
SUBMITTED BY:
CHK BY: JK
FILE NO.: AF06070–S801PN

US Army Corps of Engineers
Afghanistan Engineer District

AFGHANISTAN NATIONAL POLICE (ANP) DISTRICT HEADQUARTERS COMPOUNDS – 1 STORY HQ
VARIOUS LOCATIONS, AFGHANISTAN
GUARD SHACKS
FOUNDATION AND SLAB PLAN
ROOF FRAMING PLAN

SHEET REFERENCE NUMBER:
C
S–1

$DATE$
$FILE$

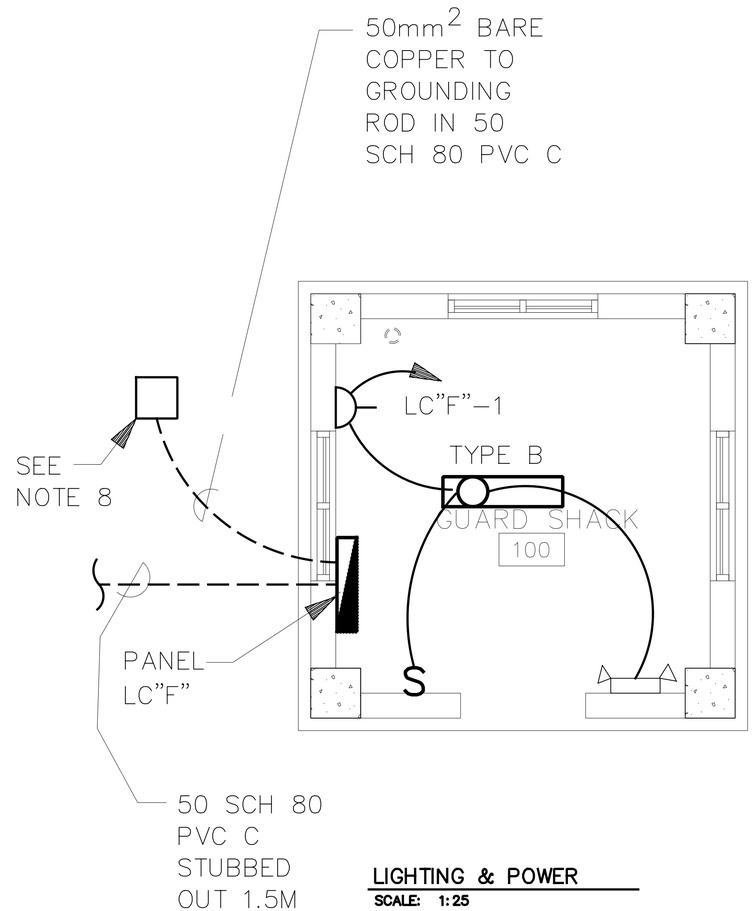


LIGHTING & POWER
SCALE: 1:25

NOTES:

1. FOR LEGEND AND ABBREVIATIONS SEE DRAWING SE-1.
2. EMERGENCY LIGHT SHALL BE UNSWITCHED
3. FOR LIGHT FIXTURE SCHEDULE SEE DRAWING SE-1.
4. COORDINATE LOCATION OF ALL ELECTRICAL FIXTURES AND MECHANICAL EQUIPMENT WITH ALL OTHER TRADES.
5. ALL WIRING SHALL BE CONCEALED OR SURFACE MOUNTED IN METAL CONDUIT.
6. PLAN IS TYPICAL FOR GUARD SHACK #1 AND #2. SECONDARY SERVICE IS SUPPLIED FROM PANEL LOAD CENTER "C" (LC "C") LOCATED IN THE GUARD TOWER #2.
7. SEE DRAWING XE-1 FOR LOCATION OF GUARD SHACKS.
8. FOR GROUNDING ROD ACCESS BOX SEE SHEET SE-2.
9. FOR SECONDARY DISTRIBUTION SEE DRAWING XE-1.
10. PROVIDE 53mm RGS C STUBBED OUT 1.5M, 600 BFG, TO BE TIED INTO SITE COMM CH AND DIRECT BURIED DUCT SYSTEM.
11. FOR BUILDING NORTH ORIENTATION SEE SHEET C-1.

LOAD CENTER "F" GUARD SHACK #1 & #2

40 AMP MAIN CIRCUIT BREAKER, 220V, 1 PH, 2W, 50 HZ, 100A BUS, 10000 AIC

| CKT. NO. | TRIP AMPS | NO. POLES | WIRE $MM^2$ | GND $MM^2$ | CONDUIT MM | LOAD SERVED | LOAD-V.A. |
|---|---|---|---|---|---|---|---|
| 1 | 20 | 1 | 4 | 4 | 20 | LIGHTING& RECEP.GUARD SHACK#2 | 300 |
| 2 | 25 | 1 | 6 | 6 | 20 | ELECT.HEAT GUARD SHACK#2 | 4000 |
| 3 | 20 | 1 | | | | SPARE | |
| 4 | 20 | 1 | | | | SPARE | |
| 5 | | | | | | SPACE | |
| 6 | | | | | | SPACE | |
| 7 | | | | | | SPACE | |
| 8 | | | | | | SPACE | |
| | | | | | | TOTAL CONN. LOAD | 4300 |

TOTAL CONN. LOAD 4.30 KVA.
100 %DEMAND = EST. DEMAND LOAD: 4.30 SERVED FROM: LC-"C"

1 .50 0 1 1.5
1:25

UNLESS OTHERWISE NOTED, LINEAR DIMENSIONS SHOWN ARE IN MILLIMETERS.

| SYMBOL | DESCRIPTION | DATE | APP |
|---|---|---|---|

DESIGNED BY: MM
DWN BY: MM
CHK BY: MFH
DATE: 4 February 2009
SUBMITTED BY:
FILE NO.: AF06070-EL01PN

US Army Corps of Engineers
Afghanistan Engineer District

AFGHANISTAN NATIONAL POLICE (ANP) DISTRICT HEADQUARTERS COMPOUNDS – 1 STORY HQ
VARIOUS LOCATIONS, AFGHANISTAN
GUARD SHACKS
LIGHTING PLAN

SHEET REFERENCE NUMBER:
C
E-1

$DATE$
$FILE$

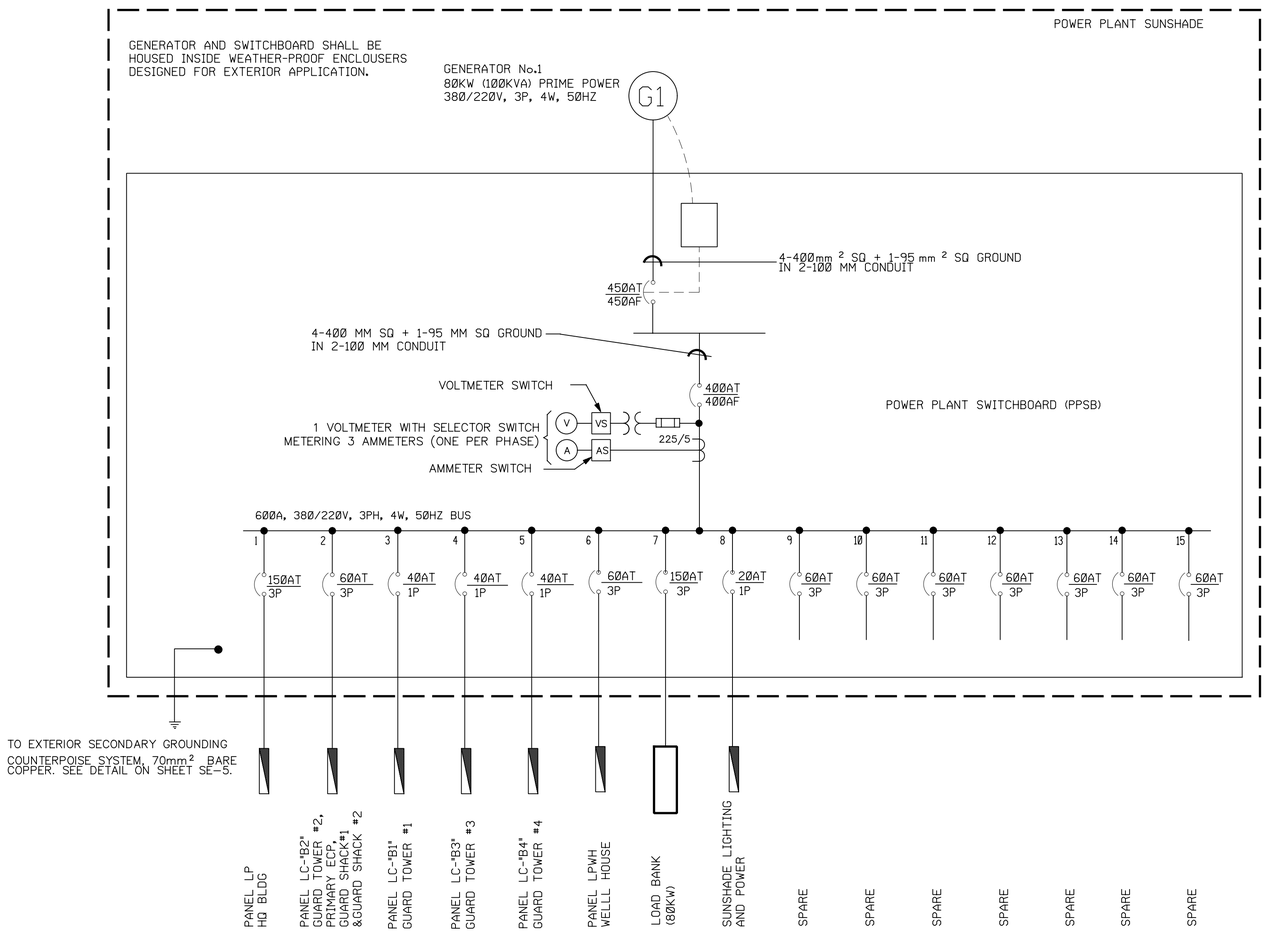


ONE LINE DIAGRAM
NOT TO SCALE

NOTES:

1. FOR LEGEND AND ABBREVIATIONS SEE DRAWING SE-1.
2. FOR POWER PLANT GROUNDING DETAILS SEE SHEET SE-5.
3. CONTRACTOR SHALL CONFIRM THAT ALL FINAL CIRCUIT RATINGS ARE BASED ON THE ACTUAL NAMEPLATE OF THE SUPPLIED EQUIPMENT.
4. ALL PPSB SECONDARY DISTRIBUTION CIRCUIT CONDUITS SHALL BE RAN FROM THE BOTTOM OF PPSB THROUGH GENERATOR CONCRETE SLAB TO ELECRIC HAND HOLES IN SCHEDULE 40 PVC CONDUIT.
5. ALL SECONDARY DISTRIBUTION CABLES SHALL BE 600V – FOUR CORE OR TWO CORE (AS INDICATED) COPPER CONDUCTOR PVC INSULATED PVC SHEATHED CABLES (CU/PVC/PVC).
6. THE POWER PLANT SWITCHBOARD SHALL BE A MANUFACTURERS STANDARD PRODUCT WITH MOLDED CASE CKT BREAKERS, DEAD FRONT CONSTRUCTION IN AN APPROVED IP54 ENCLOSURE.
7. FOR A TYPICAL POWER PLANT EQUIPMENT LAYOUT SEE THE GROUNDING PLAN ON SHEET SE-5.

PANELBOARD: PPSB
MOUNTED: FLOOR
ASYM. A.I.C. MIN: MINIMUM 22,000
MAIN BREAKER (AT/AF): 300/400
VOLTAGE RATING: 380/220V, 3PH, 4W, 50HZ
BUS AMP. RATING: 400

| CKT. NO. | TRIP AMPS | NO. POLES | WIRE MM2 | GND MM2 | CONDUIT MM | CONNECTED | REMARKS |
|---|---|---|---|---|---|---|---|
| 1 | 150 | 3 | 70 | 50 | 75 | 73.26 | PANEL LP, HEADQUARTERS BUILDING |
| 2 | 60 | 3 | 16 | 6 | 38 | 10.16 | PANEL LC-"B2": GUARD TOWER #2, PRIMARY ECP, GUARD SHACK #1, GUARD SHACK #2 |
| 3 | 40 | 1 | 10 | 6 | 25 | 1.56 | PANEL LC-"B1": GUARD TOWER #1 |
| 4 | 40 | 1 | 25 | 16 | 38 | 1.56 | PANEL LC-"B3": GUARD TOWER #3 |
| 5 | 40 | 1 | 25 | 16 | 38 | 1.56 | PANEL LC-"B4": GUARD TOWER #4 |
| 6 | 60 | 3 | 16 | 6 | 38 | 9.81 | PANEL LPWH,WELL HOUSE BUILDING |
| 7 | 150 | 3 | 70 | 16 | 75 | | LOAD BANK |
| 8 | 20 | 1 | 6 | 4 | 25 | 0.51 | SUNSHADE LIGHTING AND POWER |
| 9 | 60 | 3 | | | | | SPARE |
| 10 | 60 | 3 | | | | | SPARE |
| 11 | 60 | 3 | | | | | SPARE |
| 12 | 60 | 3 | | | | | SPARE |
| 13 | 60 | 3 | | | | | SPARE |
| 14 | 60 | 3 | | | | | SPARE |
| 15 | 60 | 3 | | | | | SPARE |
| TOTAL CONNECTED LOAD | | | | | | 98.42 KVA | |

CONN. LOAD: 98.42 KVA 80 % DEMAND = EST DEM LOAD 78.74 KVA
SUPPLIED FROM: GENERATORS

78.74 KVA x 1.20 (SPARE) = 94.49 KVA = 75.52 KW

UNLESS OTHERWISE NOTED, LINEAR DIMENSIONS SHOWN ARE IN MILLIMETERS.

| SYMBOL | DESCRIPTION | DATE | APP |
|---|---|---|---|

DESIGNED BY: MM
DATE: 4 February 2009
DWN BY: JLK
SUBMITTED BY:
CHK BY: JLK
FILE NO.: AF0807D-EP01DI

US Army Corps of Engineers
Afghanistan Engineer District

AFGHANISTAN NATIONAL POLICE (ANP) DISTRICT HEADQUARTERS COMPOUNDS – 1 STORY HQ
VARIOUS LOCATIONS, AFGHANISTAN
POWER PLANT
ONE LINE DIAGRAM

SHEET REFERENCE NUMBER:
D
E-1

$DATE$
$FILE$

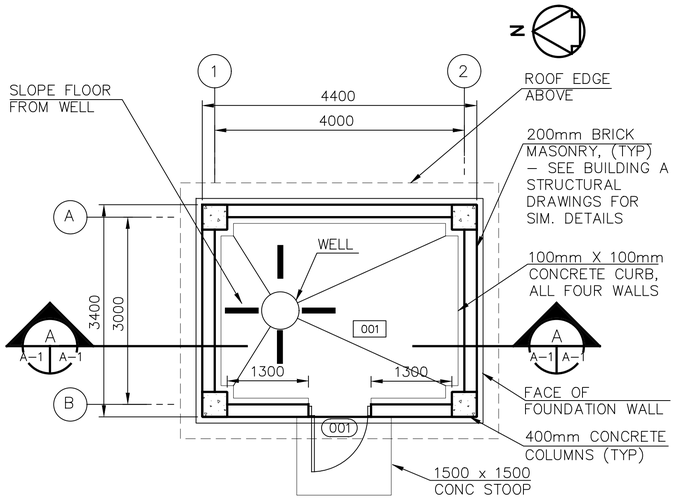


## FLOOR PLAN
SCALE=1 : 50

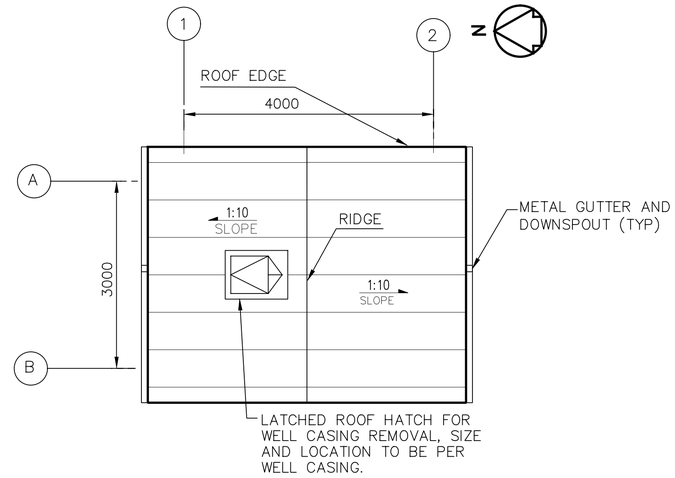


## ROOF PLAN
SCALE= 1:50

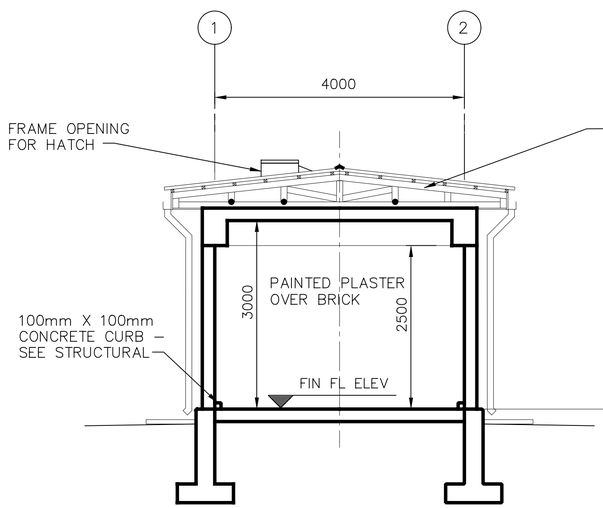


## BUILDING SECTION
SCALE=1:100

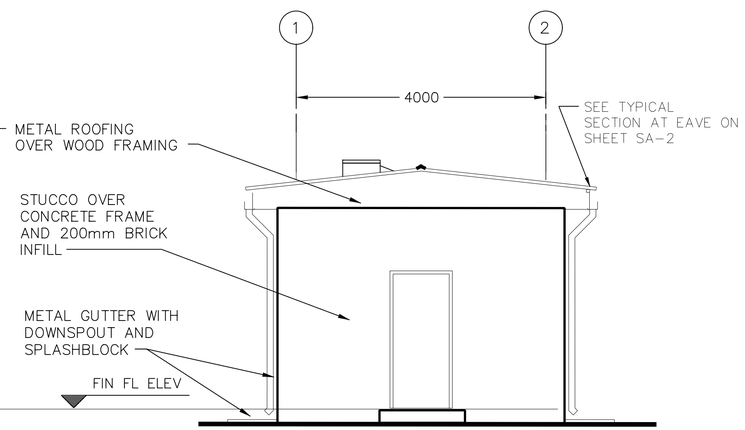


## ELEVATION
SCALE=1:50

## ROOM FINISH SCHEDULE

| ROOM NO. | ROOM NAME | FLOOR MAT'L. | BASE MAT'L. | WALLS MAT'L. | CEILING MAT'L. | CEILING HEIGHT | REMARKS |
|---|---|---|---|---|---|---|---|
| 001 | WELL HOUSE ROOM | F1 | -- | W1 | C1 | 3000 | |

## DOOR SCHEDULE

| DOOR NO. | LOCATION | TYPE | MAT'L | WIDTH | HEIGHT | THICK | FRAME MAT'L | FIRE LABEL | HDW SET | REMARKS |
|---|---|---|---|---|---|---|---|---|---|---|
| 001 | WELL HOUSE ROOM | F | WOOD | 900 | 2150 | 45 | WOOD | -- | 6 | |
| | | | | | | | | | | |

## ROOM FINISH SCHEDULE LEGEND

**FLOOR TYPE**
F1 SEALED CONCRETE

**WALL TYPE**
W1 PAINTED PLASTER – OFF WHITE

**CEILING TYPE**
C1 PAINTED EXPOSED STRUCTURE – OFF WHITE

**ROOM FINISH SCHEDULE NOTES:**

1. ALL WALL PENETRATIONS SHALL BE SEALED TO PROVIDE A NEAT APPEARANCE. PENETRATIONS OF EXTERIOR WALLS SHALL BE SEALED TO BE WATER-TIGHT.
2. SEALANTS SHALL MATCH THE COLOR OF ADJACENT SURFACES.

1 0 1 2 3 4
1:50

UNLESS OTHERWISE NOTED, LINEAR DIMENSIONS SHOWN ARE IN MILLIMETERS.

SYMBOL | DESCRIPTION | DATE | APP

DESIGNED BY: YSK | DATE: 4 February 2009
DWN BY: JSG | SUBMITTED BY:
CHK BY: TBD | FILE NO.: af0807E-a01pn

US Army Corps of Engineers
Afghanistan Engineer District

AFGHANISTAN NATIONAL POLICE (ANP) DISTRICT HEADQUARTERS COMPOUNDS – 1 STORY HQ
VARIOUS LOCATIONS, AFGHANISTAN
WELL HOUSE
FLOOR PLAN, ELEVATIONS AND SCHEDULES

SHEET REFERENCE NUMBER:
E
A–1

$DATE$
$FILE$

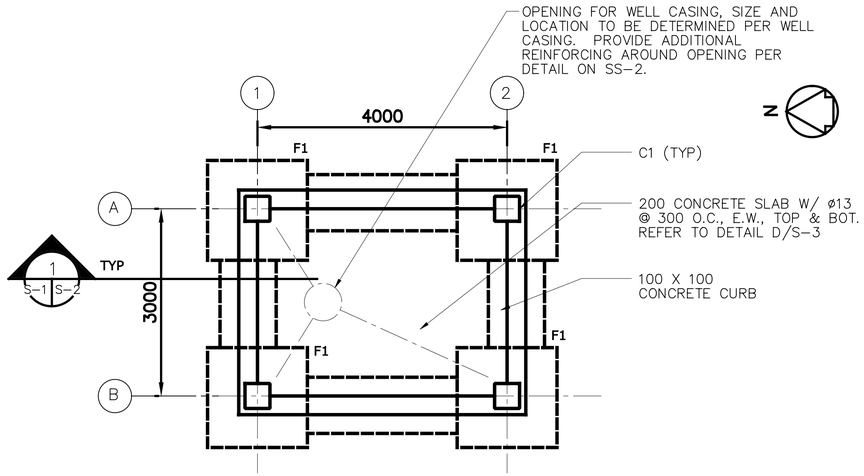


## FOUNDATION AND SLAB PLAN

SCALE=1:50

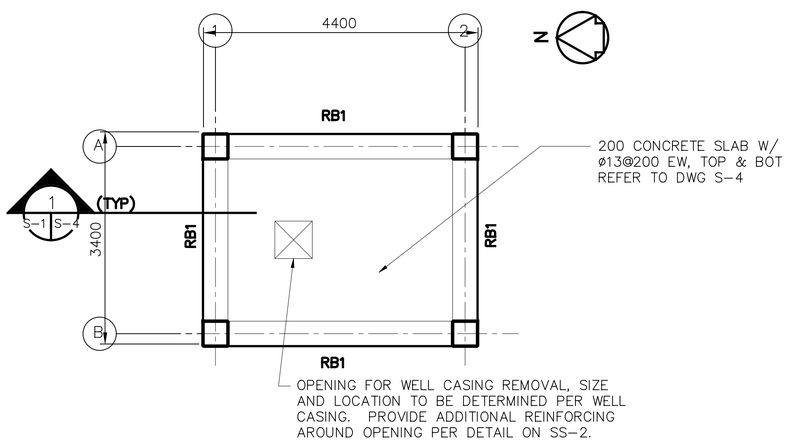


## ROOF FRAMING PLAN

SCALE=1:50

1. DESIGN LOADS (SERVICE)

   LIVE LOADS:

   ROOF: 1.0 KPA (20 PSF)
   OTHERS: 4.8 KPA (100 PSF)
   8.9 KN (2.0 K) CONCENTRATED LOAD

   WIND LOADS PER IBC-2003

   USING A "3-SECOND" WIND VELOCITY OF 125 KPH (78 MPH), EXPOSURE C AND IMPORTANCE FACTOR I=1.0

   EARTHQUAKE LOADS PER IBC-2003:

   USING A SEISMICITY: Ss=1.65g AND $S_1$=0.75g

2. MATERIALS:

   CONCRETE: 28 MPa (4 KSI)
   CYLINDER STRENGTH AT 28 DAYS

   REINFORCING: ASTM A615 GRADE 60 (60 KSI)

3. WORK THESE STRUCTURAL DRAWINGS WITH THE STANDARD-DETAILS DRAWINGS.

4. A RELATIVE (DATUM) FINISH FLOOR ELEVATION EQUAL TO 0.00 M. IS USED AS REFERENCE ELEVATION FOR ALL STRUCTURAL DRAWINGS. COORDINATE WITH SITE SPECIFIC GRADING PLAN TO BE PROVIDED BY CONTRACTOR.

5.? FOUNDATIONS ARE DESIGNED USING AN ALLOWABLE BEARING PRESSURE OF 0.75 KG/SQ CM (1500 PSF), AND BOTTOM OF FOOTINGS ARE PLACED AS SHOWN ON DRAWINGS. GEOTECHNICAL INVESTIGATION SHALL CONFIRM BEARING CAPACITY TO BE NO LESS THAN 0.75 KG/SQ CM. IF GEOTECHNICAL INVESTIGATION SHOWS LESS THAN 0.75 KG/SQ CM THE CONTRACTOR SHALL REDESIGN FOOTINGS BASED ON THE GEOTECHNICAL INVESTIGATION. SEE SPECIFICATION 01015 PARAGRAPH, GEOTECHNICAL, FOUNDATION AND SURVEY.

6. REFER TO DWG S-3 FOR COLUMN SCHEDULE.

7. REFER TO DWG S-2 FOR FOOTING SCHEDULE.

8. REFER TO DWG S-4 FOR BEAM SCHEDULE.

1 0 1 2 3 4
1:50

UNLESS OTHERWISE NOTED, LINEAR DIMENSIONS SHOWN ARE IN MILLIMETERS.

| SYMBOL | DESCRIPTION | DATE | APP |
|---|---|---|---|

DESIGNED BY: TCP
DWN BY: TCP
CHK BY: KGO
DATE: 4 February 2009
SUBMITTED BY:
FILE NO.: AF0607E-S801PN

US Army Corps of Engineers
Afghanistan Engineer District

AFGHANISTAN NATIONAL POLICE (ANP) DISTRICT HEADQUARTERS COMPOUNDS – 1 STORY HQ
VARIOUS LOCATIONS, AFGHANISTAN
WELL HOUSE
FOUNDATION PLAN AND ROOF PLAN

SHEET REFERENCE NUMBER:
E
S-1

$DATE$
$FILE$

## FOOTING SCHEDULE

| MARK | CONCRETE DIMENSIONS | | | REINFORCEMENT | | REMARKS |
|---|---|---|---|---|---|---|
| | WIDTH | LENGTH | THICKNESS | TOP | BOTTOM | |
| F1 | 1600 | 1600 | 300 | —— | 5–Ø 25 E.W. | REFER TO TYPICAL COLUMN FOOTING DETAIL THIS SHEET. |
| | | | | | | |
| | | | | | | |

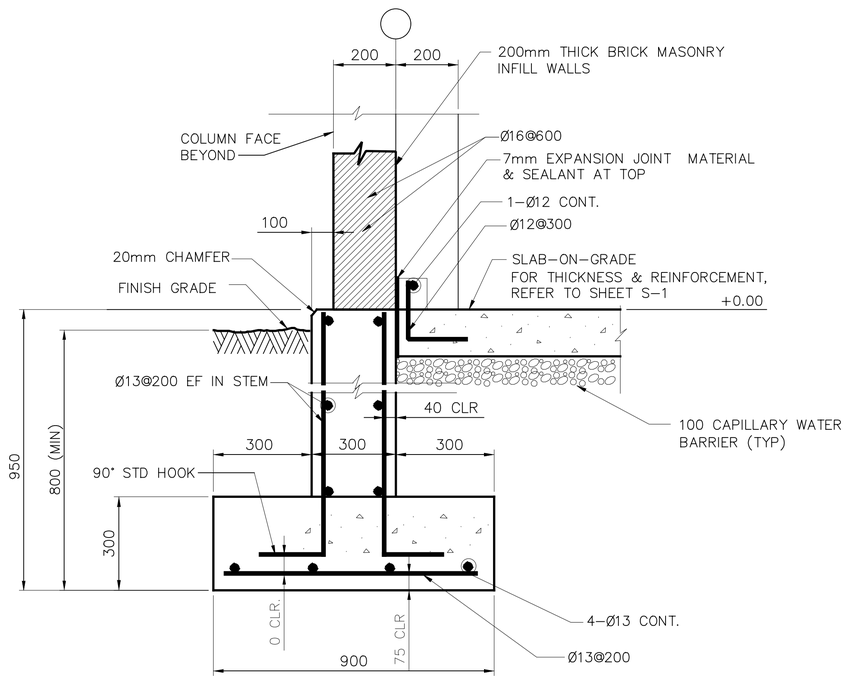


### TYPICAL WALL FOOTING

SECTION 1 S–1 S–2
SCALE=N.T.S.

NOTES:
1. HORIZONTAL STEM WALL AND FOOTING REINFORCEMENTS ARE CONTINUOUS THROUGH COLUMN AND COLUMN FOOTING
2. AT DISCONTINUOUS STEM WALL BARS TERMINATE WITH STANDARD HOOK IN COLUMN. FOOTING BARS TERMINATE WITH 600 MM EMBEDMENT IN COLUMN FOOTING.

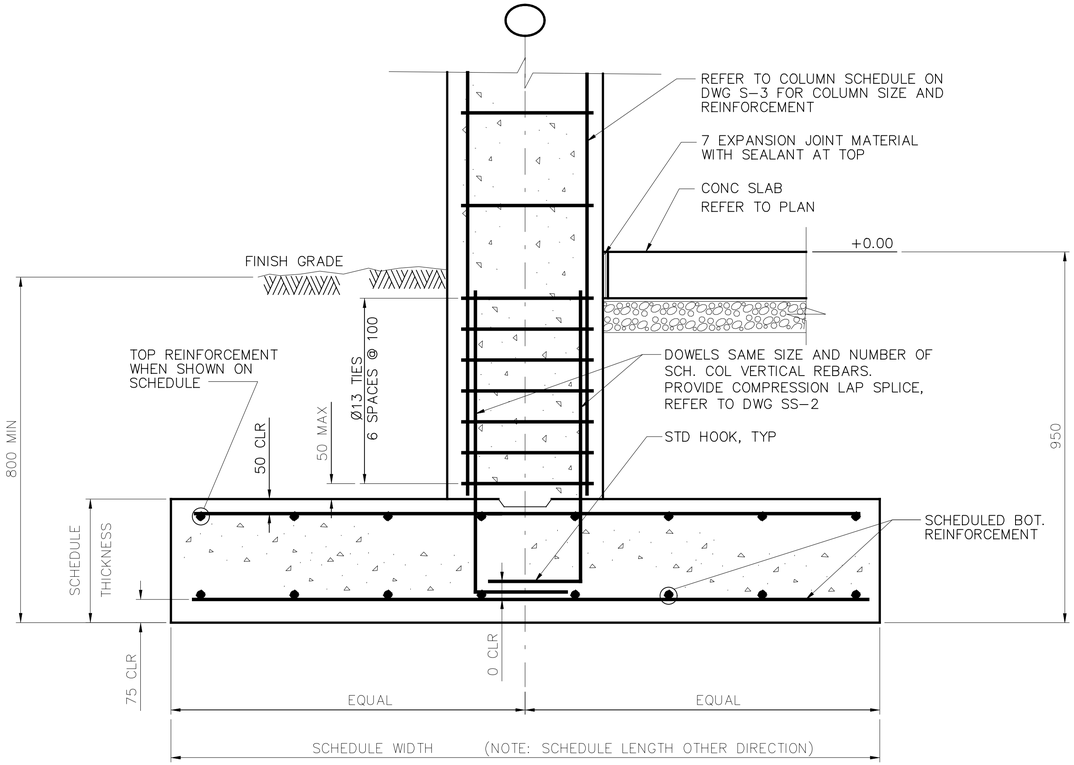


DETAIL A S–2 S–2
SCALE=N.T.S.

### TYPICAL COLUMN FOOTING

UNLESS OTHERWISE NOTED, LINEAR DIMENSIONS SHOWN ARE IN MILLIMETERS.

| SYMBOL | DESCRIPTION | DATE | APP |
|---|---|---|---|

DESIGNED BY: TCP
DWN BY: TCP
CHK BY: KGO
DATE: 4 February 2009
SUBMITTED BY:
FILE NO.: AF0607E–S802DT

US Army Corps of Engineers
Afghanistan Engineer District

AFGHANISTAN NATIONAL POLICE (ANP) DISTRICT HEADQUARTERS COMPOUNDS – 1 STORY HQ
VARIOUS LOCATIONS, AFGHANISTAN
WELL HOUSE
FOOTING DETAILS

SHEET REFERENCE NUMBER:
E
S–2

$DATE$
$FILE$

## COLUMN SCHEDULE

NOTES: 1. REFER TO DETAILS ON PLATES S–3 AND S–2 FOR TYPICAL COLUMN DETAILS.

| COLUMN GRIDS | COLUMN TYPE | CONCRETE DIMENSIONS | | VERTICAL REINFORCEMENT | TIE REINFORCEMENT | |
|---|---|---|---|---|---|---|
| | | WIDTH | DEPTH | | SIZE | SPACING |
| A–1, A–2<br>B–1, B–2 | C1 | 400 | 400 | 8–Ø 29 | Ø13 | 300 |

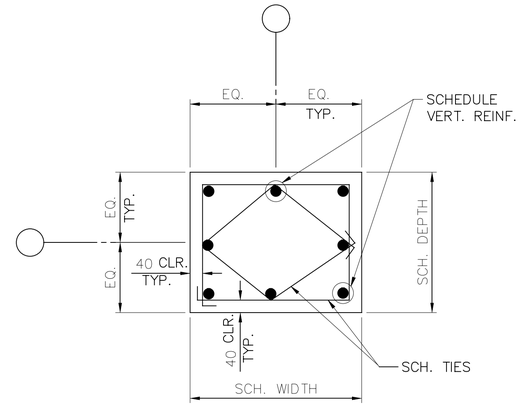


C1

## COLUMN TYPE

DETAIL A
SCALE=N.T.S.
S–3 S–3

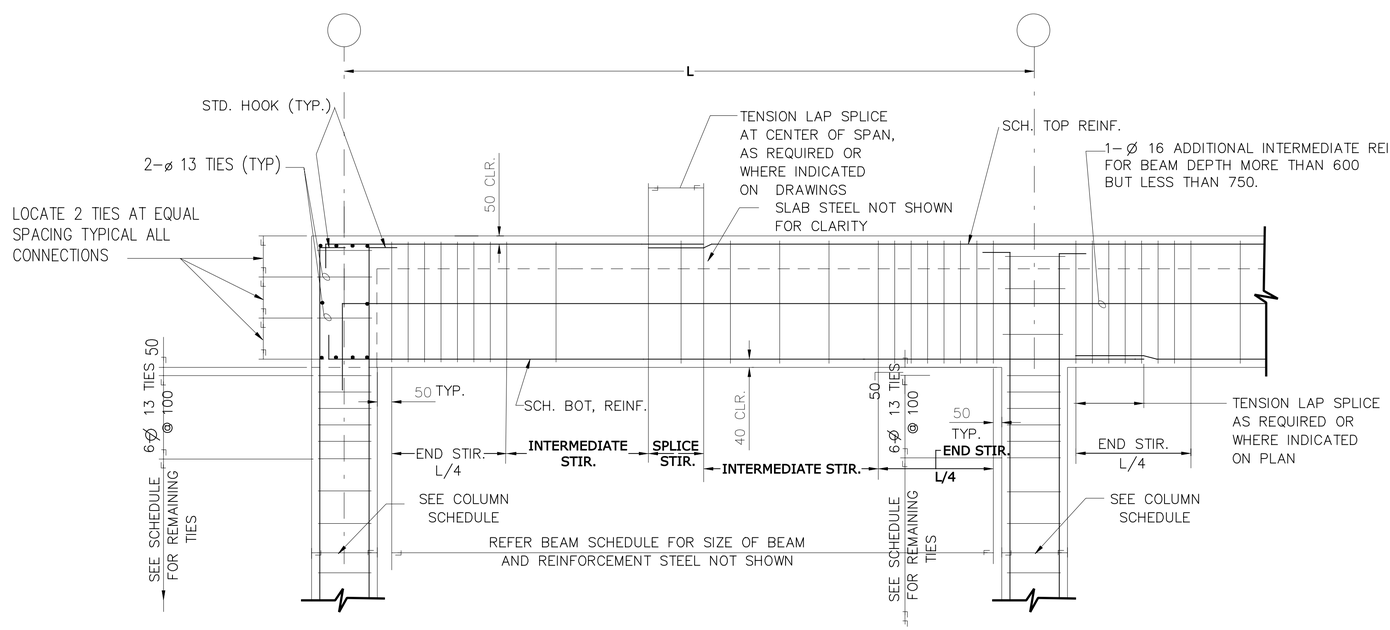


TYPICAL BEAM TO COLUMN END CONNECTION

DETAIL B
SCALE=N.T.S.
S–3 S–3

TYPICAL BEAM TO COLUMN INTERIOR CONNECTION

DETAIL C
SCALE=N.T.S.
S–3 S–3

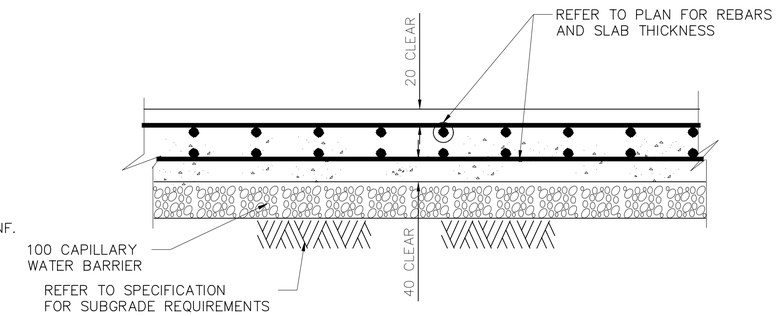


SLAB–ON–GRADE WITH TOP & BOTTOM REINFORCEMENTS

DETAIL D
SCALE=N.T.S.
S–1 S–3

UNLESS OTHERWISE NOTED, LINEAR DIMENSIONS SHOWN ARE IN MILLIMETERS.

| SYMBOL | DESCRIPTION | DATE | APP |
|---|---|---|---|

DESIGNED BY: TCP
DATE: 4 February 2009
DWN BY: TCP
SUBMITTED BY:
CHK BY: KGO
FILE NO.: AF0607E–SF030T

US Army Corps of Engineers
Afghanistan Engineer District

AFGHANISTAN NATIONAL POLICE (ANP) DISTRICT HEADQUARTERS COMPOUNDS – 1 STORY HQ
VARIOUS LOCATIONS, AFGHANISTAN
WELL HOUSE
SLAB–ON–GRADE DETAILS

SHEET REFERENCE NUMBER:
E
S–3

$DATE$
$FILE$

## BEAM SCHEDULE

| MARK | CONCRETE DIMENSIONS | | FLEXURAL REINFORCEMENT | | STIRRUP REINFORCEMENT | | | | REMARKS |
|---|---|---|---|---|---|---|---|---|---|
| | | | | | SIZE | TYPE | SPACING | | |
| | WIDTH | DEPTH | TOP | BOTTOM | | | ENDS & SPLICE | INTERMEDIATE | |
| RB1 | 400 | 700 | 4–Ø 22 | 4–Ø 22 | Ø13 | | 160 | 320 | |
| | | | | | | | | | |
| | | | | | | | | | |

NOTE: REFER TO DETAILS ON PLATE S–2 FOR TYPICAL BEAM ELEVATIONS AND SECTION 1 THIS PLATE FOR TYPICAL BEAM SECTION.

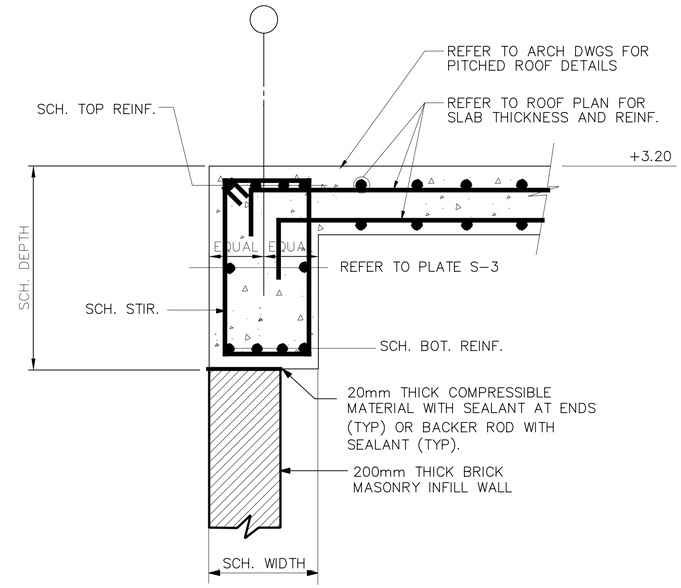


SECTION 1 S–1 S–4
SCALE=N.T.S.

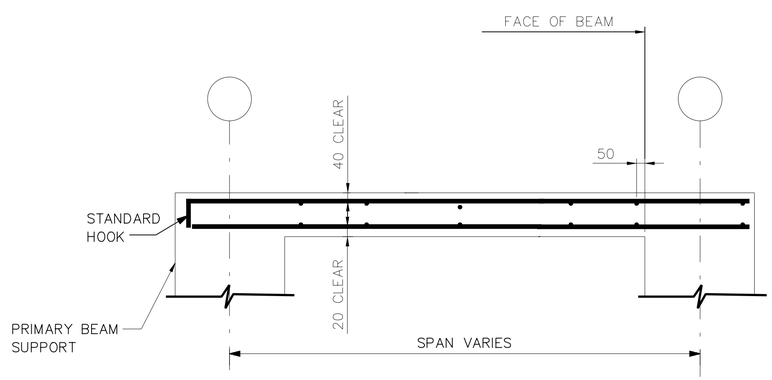


STRUCTURAL SLAB WITH TOP & BOTTOM REINFORCEMENTS

UNLESS OTHERWISE NOTED, LINEAR DIMENSIONS SHOWN ARE IN MILLIMETERS.

| SYMBOL | DESCRIPTION | DATE | APP |
|---|---|---|---|

DESIGNED BY: TCP
DATE: 4 February 2009
DWN BY: TCP
SUBMITTED BY:
CHK BY: KGO
FILE NO.: AF0607E–SF040T

US Army Corps of Engineers
Afghanistan Engineer District

AFGHANISTAN NATIONAL POLICE (ANP) DISTRICT HEADQUARTERS COMPOUNDS – 1 STORY HQ
VARIOUS LOCATIONS, AFGHANISTAN
WELL HOUSE
ROOF BEAM AND STRUCTURAL SLAB DETAILS

SHEET REFERENCE NUMBER:
E
S–4

$DATE$
$FILE$

NOTES:
1. FOR LEGENDS, ABBREVIATIONS AND STANDARD MECHANICAL DETAILS SEE SHEETS SM-1 AND SM-3.
2. FOR EQUIPMENT SCHEDULES AND CONTROL DIAGRAMS SEE SHEET SM-2.
3. PROVIDE EACH EXHAUST FAN WITH MANUFACTURER'S STANDARD EXHAUST GRILL AND GRAVITY BACKDRAFT DAMPER.
4. PROVIDE 400x400 SAND LOUVER WITH 50MM THICK WASHABLE METAL FILTERS.

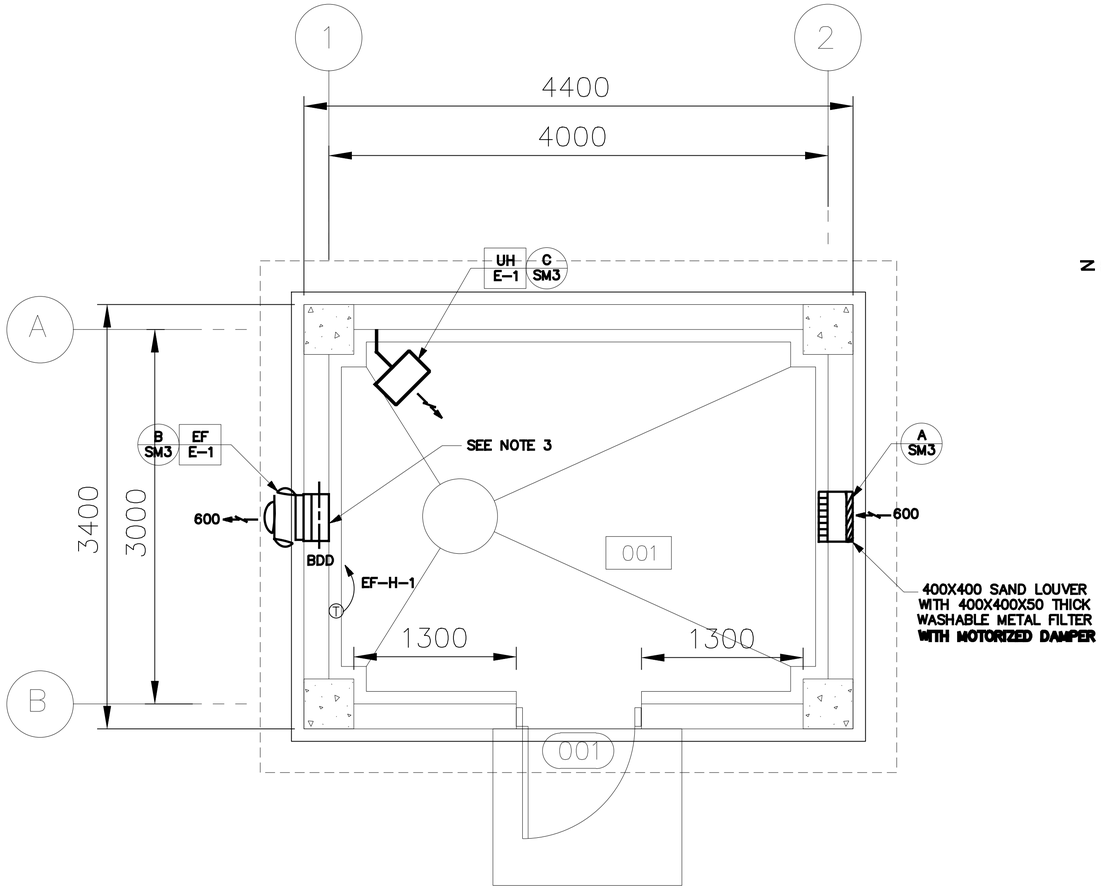


HVAC PLAN
SCALE= 1: 25

1 .50 0 1 1.5
1:25

UNLESS OTHERWISE NOTED, LINEAR DIMENSIONS SHOWN ARE IN MILLIMETERS.

| SYMBOL | DESCRIPTION | DATE | APP |
|---|---|---|---|

DESIGNED BY: RMS
DATE: 4 February 2009
DWN BY: JMC
SUBMITTED BY:
CHK BY: SE
FILE NO.: AF0607E-MH01PN

US Army Corps of Engineers
Afghanistan Engineer District

AFGHANISTAN NATIONAL POLICE (ANP) DISTRICT HEADQUARTERS COMPOUNDS – 1 STORY HQ
VARIOUS LOCATIONS, AFGHANISTAN

WELL HOUSE
HVAC PLAN

SHEET REFERENCE NUMBER:
E
M-1

$DATE$
$FILE$

NOTES:

1. FOR LEGEND AND ABBREVIATIONS SEE DRAWING SE–1.

2.COORDINATE LOCATION OF ALL ELECTRICAL FIXTURES AND EQUIPMENT WITH ALL OTHER TRADES.

3. FOR ONE LINE DIAGRAM SEE DRAWING E– 1, POWER PLANT.

4. ALL WIRING SHALL BE SURFACE MOUNTED IN METAL CONDUIT.

5. FOR EXACT LOCATION OF MECHANICAL EQUIPMENT SEE MECHANICAL DRAWINGS.

6. DESIGN IS BASED ON A 5 HP PUMP. IT IS CONTRACTOR'S RESPONSIBILITY TO DESIGN AND PROVIDE PROPERLY SIZED PUMP AS REQUIRED BY THE CONTRACT DOCUMENTS.

7. CONTRACTOR SHALL CONFIRM THAT ALL CIRCUIT RATINGS ARE BASED ON THE ACTUAL NAMEPLATE OF THE SUPPLIED EQUIPMEN

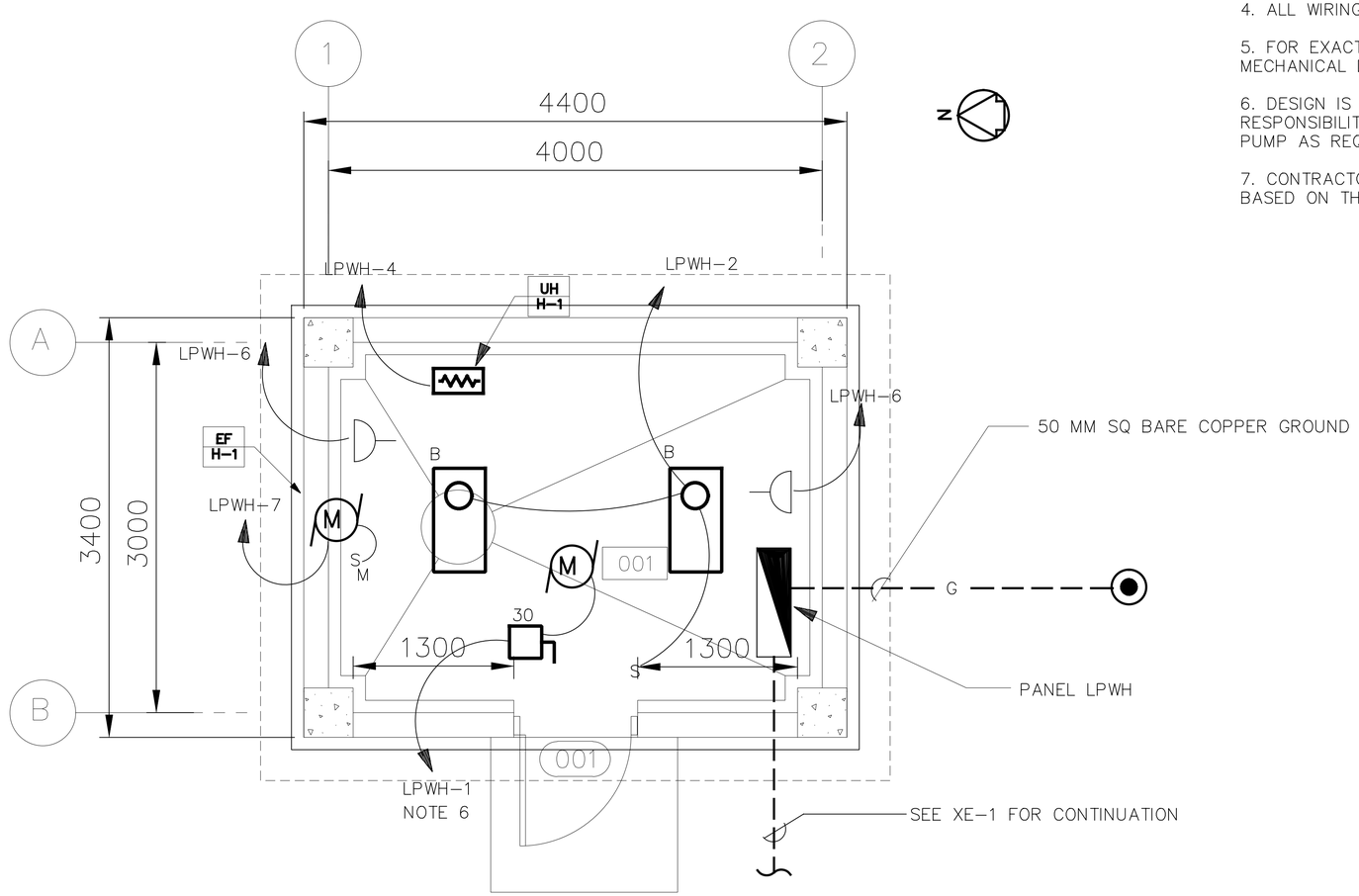


## LIGHTING AND POWER PLAN

SCALE= 1:25

1 .50 0 1 1.5
1:25

UNLESS OTHERWISE NOTED, LINEAR DIMENSIONS SHOWN ARE IN MILLIMETERS.

| SYMBOL | DESCRIPTION | DATE | APP |
|---|---|---|---|

DESIGNED BY: MM
DWN BY: JMR
CHK BY: SE
DATE: 4 February 2009
SUBMITTED BY:
FILE NO.: AF0807E–EL01PN

US Army Corps of Engineers
Afghanistan Engineer District

AFGHANISTAN NATIONAL POLICE (ANP) DISTRICT HEADQUARTERS COMPOUNDS – 1 STORY HQ
VARIOUS LOCATIONS, AFGHANISTAN
WELL HOUSE
LIGHTING AND POWER PLAN

SHEET REFERENCE NUMBER:
E
E–1

$DATE$
$FILE$

PANELBOARD LPWH SURFACE MOUNTED MINIMUM 14,000 ASYM. A.I.C. MIN.

_____ AMP. MAIN LUGS (OR) 40 AMP. MAIN BREAKER W/ 40 AMP. TRIP

CIRCUIT BREAKER TYPE 380/220 VOLTS 3 PHASE 4 WIRE 100 AMP. BUS

| CKT. NO. | TRIP AMPS | NO. POLES | WIRE MM2 | GND MM2 | CONDUIT MM | LOAD SERVED | LOAD-V.A. | | | LOAD-V.A. | | | LOAD SERVED | CONDUIT MM | GND MM2 | WIRE MM2 | NO. POLES | TRIP AMPS | CKT. NO. |
|---|---|---|---|---|---|---|---|---|---|---|---|---|---|---|---|---|---|---|---|
| | | | | | | | AØ | BØ | CØ | AØ | BØ | CØ | | | | | | | |
| 1 | 40 | 1 | 6 | 6 | 25 | WELL PUMP | 6048 | | | 150 | | | LIGHTING | 20 | 4 | 4 | 1 | 20 | 2 |
| 3 | 20 | 1 | 4 | 4 | 20 | EF-H-1 | 250 | 0 | | | 3000 | | ELECTRIC HEAT, UH-E-1 | 20 | 4 | 4 | 1 | 20 | 4 |
| 5 | 20 | 1 | | | | SPARE | | | 0 | | | 360 | RECEPTACLES | 20 | 4 | 4 | 1 | 20 | 6 |
| 7 | | | | | | SPACE | | | | | | | SPARE | | | | 1 | 20 | 8 |
| 9 | | | | | | SPACE | | | | | | | SPACE | | | | | | 10 |
| 11 | | | | | | SPACE | | | | | | | SPACE | | | | | | 12 |
| 13 | | | | | | SPACE | | | | | | | SPACE | | | | | | 14 |
| 15 | | | | | | SPACE | | | | | | | SPACE | | | | | | 16 |
| | | | | | | | 6298 | 0 | 0 | 150 | 3000 | 360 | | | | | | | |

TOTAL CONN. LOAD 9.81 KVA 100 % DEMAND = ESTIMATED DEMAND LOAD: 9.81 KVA

TOTAL CONN. LOAD
PER PHASE (KVA): AØ 6.45 BØ 3.00 CØ .36

SUPPLIED FROM POWER PLANT SWITCHBOARD(PPSB)

NOTES:

1. FOR LEGEND AND ABBREVIATIONS SEE DRAWING SE-1.
2. EMERGENCY LIGHT SHALL BE CONNECTED AHEAD OF LIGHT SWITCH.
3. FOR LIGHT FIXTURE SCHEDULE SEE DRAWING SE-1.
4. COORDINATE LOCATION OF ALL ELECTRICAL FIXTURES AND EQUIPMENT WITH ALL OTHER TRADES.
5. ALL WIRING SHALL BE IN CONCEALED OR SURFACE MOUNTED METAL CONDUIT.
6. FOR ONE LINE DIAGRAM SEE DRAWING D/E-1, POWER PLANT.
7. CONTRACTOR SHALL CONFIRM THAT ALL CIRCUIT RATING IS BASED ON THE ACTUAL NAME PLATE OF THE SUPPLIED EQUIPMENT.

UNLESS OTHERWISE NOTED, LINEAR DIMENSIONS SHOWN ARE IN MILLIMETERS.

SYMBOL | DESCRIPTION | DATE | APP

DESIGNED BY: MM | DATE: 4 February 2009
DWN BY: JMR | SUBMITTED BY:
CHK BY: SE | FILE NO.: AF0607E-EL02SC

US Army Corps of Engineers
Afghanistan Engineer District

AFGHANISTAN NATIONAL POLICE (ANP) DISTRICT HEADQUARTERS COMPOUNDS – 1 STORY HQ
VARIOUS LOCATIONS, AFGHANISTAN
WELL HOUSE
ELECTRICAL SCHEDULES

SHEET REFERENCE NUMBER:
E
E-2

$DATE$
$FILE$

# ARCHITECTURAL ABBREVIATIONS AND SYMBOLS

## ABBREVIATIONS

### A

| | |
|---|---|
| @ | AT |
| AC | AIR CONDITIONER |
| ACCFLR | RAISED FLOOR SYSTEM |
| ACFT | AIRCRAFT |
| ACST | ACOUSTICAL |
| AD | AREA DRAIN |
| A/E | ARCHITECT/ENGINEERS |
| AFF | ABOVE FINISH FLOOR |
| ALUM | ALUMINUM |
| ANOD | ANODIZED |
| AOC | AIR OPERATIONS CENTER |
| APPROX | APPROXIMATELY |
| ARCH | ARCHITECTURAL |
| ASPH | ASPHALT |
| ATC | ACOUSTICAL TILE CEILING |
| AWP | ACOUSTICAL WALL PANEL |

### B

| | |
|---|---|
| BB | BALL BEARING |
| BMUM | BITUMINOUS |
| BL | BASE LINE |
| BLDG | BUILDING |
| BLK | BLOCK |
| B/M | BENCH MARK OR BEAM |
| BOM | BILL OF MATERIALS |
| BRKT | BRACKET |
| BOT | BOTTOM |
| BRD | BOARD |

### C

| | |
|---|---|
| CARP | CARPET |
| CB | CORE BORING |
| C TO C | CENTER TO CENTER |
| CEM | CEMENT |
| CH | CLEAR HEART |
| CFM | CUBIC FEET PER MINUTE |
| CI | CAST IRON |
| CIP | CAST IN PLACE |
| CJ OR CJT | CONTROL JOINT |
| ℄ | CENTER LINE |
| CLF | CHAIN LINK FENCE |
| CLG | CEILING |
| CLR | CLEAR |
| CM | CENTIMETER |
| CMDR | COMMANDER |
| CMP | CORRUGATED METAL PIPE |
| CMU | CONCRETE MASONRY UNIT |
| CO | CLEANOUT |
| COE | CORPS OF ENGINEERS |
| CONCR | CONCRETE |
| CONN | CONNECTION |
| CONST | CONSTRUCTION |
| CONT | CONTINUOUS |
| CONTAM | CONTAMINATED |
| CONTR | CONTRACTOR |
| CORR | CORRUGATED |
| CPRSR | COMPRESSOR |
| CT | CERAMIC TILE |
| CTR | CENTER |
| CUL | CULVERT |
| CUM | CUBIC METERS |
| CWT | COUNTERWEIGHT |
| COORD | COORDINATE |

### D

| | |
|---|---|
| D | DEPTH |
| DECON | DECONTAMINATION |
| DET | DETAIL |
| DI | DRAIN INLET |
| DIA | DIAMETER |
| DIM | DIMENSION |
| DISP | DISPENSER |
| DJ | DUMMY JOINT |
| DRWG | DRAWING |
| DS | DOWNSPOUT |
| DW | DRINKING WATER |

### E

| | |
|---|---|
| E | EAST |
| EA | EACH |
| EG | EXISTING GRADE |
| EJ | EXPANSION JOINT |
| EL OR ELEV | ELEVATION |
| ELEC | ELECTRICAL |
| ENCL | ENCLOSURE |
| ENGR | ENGINEER |
| ENT | ENTRANCE |
| EPDM | ELASTOMERIC ROOFING |
| EPX | EPOXY COATING |
| EQ | EQUAL |
| ES/EW | EMERGENCY SHOWER/EYE WASH |
| EW | EACH WAY |
| EXCA | EXCAVATE |
| EXH | EXHAUST |
| EXIST | EXISTING |
| EXP | EXPANSION OR EXPOSED |
| EWC | ELECTRIC WATER COOLER |
| EWH | ELECTRIC WATER HEATER |

## ABBREVIATIONS

### F

| | |
|---|---|
| F | FEET |
| FD | FLOOR DRAIN |
| FDN | FOUNDATION |
| FF & E | FURNITURE, FURNISHINGS AND EQUIPMENT |
| F TO F | FACE TO FACE |
| FE | FIRE EXTINGUISHER |
| FFLEL | FINISH FLOOR ELEVATION |
| FG | FINISH GRADE |
| FH | FIRE HYDRANT |
| FIN | FINISH |
| FL | FLOOR |
| FPM | FEET PER MINUTE |
| FTG | FOOTING |

### G

| | |
|---|---|
| GA | GAUGE |
| GALV | GALVANIZED |
| GPM | GALLONS PER MINUTE |
| GR | GRADE |
| GT | GATE (FENCE) |
| GVL | GRAVEL |
| GYP | GYPSUM |

### H

| | |
|---|---|
| HB | HOSE BIB |
| HDW | HARDWARE |
| HDWD | HARDWOOD |
| HZ | HERTZ |
| HF | HIGH FREQUENCY |
| HGT | HEIGHT |
| HM | HOLLOW METAL |
| HORIZ | HORIZONTAL |
| HP | HIGH POINT |
| HH | HEX HEAD |
| HC | HANDICAPPED |
| HR | HOUR |

### I

| | |
|---|---|
| ID | INSIDE DIAMETER |
| INSTL | INSTALL |
| INTEL | INTELLIGENCE |
| INTER | INTERIOR |
| INV | INVERT |
| INSUL | INSULATION |

### J

| | |
|---|---|
| JAN | JANITOR |
| JB | JUNCTION BOX |
| JCT | JUNCTION |
| JT | JOINT |

### K

| | |
|---|---|
| KG | KILOGRAM |
| KM | KILOMETER |
| KPA | KILO PASCAL |
| KPH | KILOMETERS PER HOUR |

### L

| | |
|---|---|
| LAM | LAMINATE |
| LAT | LATITUDE |
| LAV | LAVATORY |
| LBY | LOBBY |
| LBS | POUNDS |
| LG | LONG |
| LINMET | LINEAR METAL CEILING SYSTEM |
| LNRPNL | METAL LINER PANEL |
| LOC | LIMITS OF CONSTRUCTION |
| LONG | LONGITUDE |
| LP | LOW POINT |
| LSD | LARGE SCREEN DISPLAY |
| LTG P | LIGHTING PANEL |
| LVR | LOUVER |

### M

| | |
|---|---|
| M | METER |
| MATL | MATERIAL |
| MAX | MAXIMUM |
| MECH | MECHANICAL |
| MH | MANHOLE |
| MISC | MISCELLANEOUS |
| MIN | MINIMUM |
| ML | MATCH LINE |
| MM | MILLIMETERS |
| MO | MASONRY OPENING |
| MON | MONUMENT |
| MOIST | MOISTURE |
| MPH | MILES PER HOUR |
| MTD | MOUNTED |
| MTL | METAL |
| MSNRY | MASONRY |
| MFR | MANUFACTURER |
| MATL | MATERIAL |
| MW | FORCE PROTECTION DOOR |

## ABBREVIATIONS

### N

| | |
|---|---|
| N | NORTH |
| NA | NOT APPLICABLE |
| NIC | NOT IN CONTRACT |
| NICAD | NICKEL CADMIUM |
| NO | NUMBER |
| NTS | NOT TO SCALE |

### O

| | |
|---|---|
| OC | ON CENTER |
| OD | OUTSIDE DIAMETER |
| OPH | OPPOSITE HAND |
| OPNG | OPENING |
| OPP | OPPOSITE |
| OPS | OPERATIONS |

### P

| | |
|---|---|
| PANL | PANEL |
| PCS | PIECES |
| PE | POLYETHYLENE |
| PKG | PARKING OR PACKAGE |
| PL | PLATE |
| PLAS | PLASTER |
| PLBG | PLUMBING |
| POL | PETROLEUM OIL LUBRICANT |
| PP | POWER PANEL |
| PRCST | PRECAST |
| PROP | PROPERTY |
| PSF | POUNDS PER SQUARE FOOT |
| PTD | PAINTED |
| PTR | PIPE TRENCH |
| PVMT | PAVEMENT |

### Q

| | |
|---|---|
| Q | DESIGN DISCHARGE |
| QD | QUICK DISCONNECT |

### R

| | |
|---|---|
| R | RADIUS OR REINFORCED |
| RCP | REINFORCED CONCRETE PIPE |
| RD | ROOF DRAIN |
| RE | REFERENCE |
| REINF | REINFORCED |
| REQD | REQUIRED |
| REV | REVISION |
| RH | RIGHT HAND |
| RI | RISER |
| RM | ROOM |
| RO | ROUGH OPENING |
| ROW | RIGHT OF WAY |
| RP | RADIUS POINT |
| RR | RAILROAD |
| RT | RIGHT |
| RTU | ROOF TOP UNIT |
| RVS | REVERSE |
| RW | RAW WATER |

### S

| | |
|---|---|
| S OR SO | SOUTH |
| SCH | SCHEDULE |
| SECT | SECTION |
| SD | SMOKE DETECTOR |
| SG | SUB GRADE |
| SH OR SHT | SHEET |
| SHWR | SHOWER |
| SIM | SIMILIAR |
| SL | SLOPE |
| SMH | SEWER MANHOLE |
| SOC | STRATEGIC OPERATIONS CENTER |
| SPEC | SPECIFICATION |
| SPFC | SPECIFIC |
| SQ | SQUARE |
| SS | SANITARY SEWER |
| SST | STAINLESS STEEL |
| STA | STATION |
| STD | STANDARD |
| STL | STEEL |
| STRUCT | STRUCTURAL |
| SUSPLAS | SUSPENDED PLASTER |
| SVC | SERVICE CONNECTION |

## ABBREVIATIONS

### T

| | |
|---|---|
| TC | TOP OF CURB |
| TELE C | TELEPHONE CABINET |
| TER | TERRAZZO |
| TG | TOP OF GRATE |
| TK | TANK |
| TO | TECHNICAL ORDER |
| TOS | TOP OF STEEL |
| TOW | TOP OF WALL |
| TP | TEST PIT |
| TR | TRENCH |
| TSW | TOP OF SIDEWALK |
| TYP | TYPICAL |
| TP | TOP OF PAVEMENT |
| TH/THK | THICK / THICKNESS |

### U

| | |
|---|---|
| UBC | UNIFORM BUILDING CODE |
| UG | UNDERGROUND |
| UNO | UNLESS NOTED OTHERWISE |
| UPS | UNINTERRUPTIBLE POWER SUPPLY |
| UTIL | UTILITY |

### V

| | |
|---|---|
| VB | VALVE BOX |
| VC | VERTICAL CURVE |
| VCT | VINYL COMPOSITION TILE |
| VEH | VEHICLE |
| VEL | VELOCITY |
| VERT | VERTICAL |
| VEST | VESTIBULE |
| VIP | VERY IMPORTANT PERSON |
| VTR | VENT THRU ROOF |

### W

| | |
|---|---|
| W | WEST, WIDE |
| WC | WATER CLOSET |
| WM | WIRE MESH PARTITION |
| WSP | WELDED STEEL PIPE |
| WT | WEIGHT |
| W/O | WITHOUT |
| W/ | WITH |
| WWF | WELDED WIRE FABRIC |

## REFERENCE SYMBOLS

- DETAIL IDENTIFICATION
- NO.OF SHEET ON WHICH DETAIL IS DRAWN
- NO. OF SHEET ON WHICH CONDITION IS REFERENCED
- BUILDING SECTION IDENTIFICATION
- NO.OF SHEET ON WHICH SECTION IS DRAWN
- WALL SECTION IDENTIFICATION
- NO.OF SHEET ON WHICH SECTION IS DRAWN
- 102 — ROOM NUMBER
- 102 — DOOR NUMBER
- H — COLUMN LINE
- A — WINDOW TYPE
- A — WALL TYPE IDENTIFIER
- 102 — EQUIPMENT IDENTIFIER
- 102 — FURNITURE IDENTIFIER
- FIN FL ELEV 100.00 — FINISH FLOOR EL. SYMBOL IN PLAN
- FIN FL ELEV 100.00 — FINISH FLOOR EL. SYMBOL IN SECT. AND ELEV.
- INTERIOR ELEVATION KEY SYMBOL
- EXTERIOR ELEVATION IDENTIFIER
- STUCCO CONTROL JOINT
- LOUVER IDENTIFIER
- STRUCTURAL CONTROL JOINT
- WALLS TO THE UNDERSIDE OF THE STRUCTURE
- F — FIRE EXTINGUISHER

## MATERIAL SYMBOLS

- EARTH
- CAST CONCRETE (SECTION)
- LIGHTWEIGHT CONCRETE (SECTION)
- CONCRETE MASONRY UNIT (LARGE SCALE–PLAN)
- STEEL
- ROUGH WOOD
- FINISHED WOOD
- WOOD BLOCKING
- PLYWOOD–LARGE SCALE
- GLASS (ELEVATION)
- BATT FILL INSULATION (SECTION)
- LOOSE FILL INSULATION (PLAN)
- RIGID BOARD INSULATION
- CERAMIC TILE–LARGE SCALE
- CONCRETE (PLAN & ELEVATION)
- CERAMIC TILE (PLAN & ELEVATION)
- PLASTER OR STUCCO (ELEVATION)
- SHEET MEMBRANE
- LANDSCAPING (TREE, SHRUB, ETC.)

GENERAL NOTES:

1. THE LIST OF ABBREVIATIONS IS SHOWN AS A GUIDE ONLY AND DOES NOT NECESSARILY INCLUDE ALL ABBREVIATIONS USED. OTHER ABBREVIATIONS MAY BE FOUND AMONG THE DRAWINGS. SOME ABBREVIATIONS LISTED MAY NOT HAVE BEEN USED.
2. FOR REFERENCE PURPOSES, A FINISHED FLOOR ELEVATION OF 100.00 HAS BEEN ESTABLISHED FOR GRADE LEVEL FLOOR PLANS. ON ARCHITECTURAL DRAWINGS. SEE CIVIL DRAWINGS FOR ACTUAL FINISHED FLOOR AND FINISHED GRADE ELEVATIONS.
3. HOUSEKEEPING PADS FOR MECHANICAL EQUIPMENT SHALL BE PROVIDED AS REQUIRED BY MECHANICAL DRAWINGS. SIZE AND LOCATION SHALL BE COORDINATED WITH MECHANICAL EQUIPMENT PROVIDED.

UNLESS OTHERWISE NOTED, LINEAR DIMENSIONS SHOWN ARE IN MILLIMETERS.

| SYMBOL | DESCRIPTION | DATE | APP |
|---|---|---|---|

DESIGNED BY: SH
DATE: 4 February 2009
DWN BY: JSG
SUBMITTED BY:
CHK BY: YSK
FILE NO.:

US Army Corps of Engineers
Afghanistan Engineer District

AFGHANISTAN NATIONAL POLICE (ANP) DISTRICT HEADQUARTERS COMPOUNDS – 1 STORY HQ
VARIOUS LOCATIONS, AFGHANISTAN
STANDARD DETAILS
ABBREVIATIONS AND SYMBOLS

SHEET REFERENCE NUMBER:
SA–1

$DATE$
$FILE$

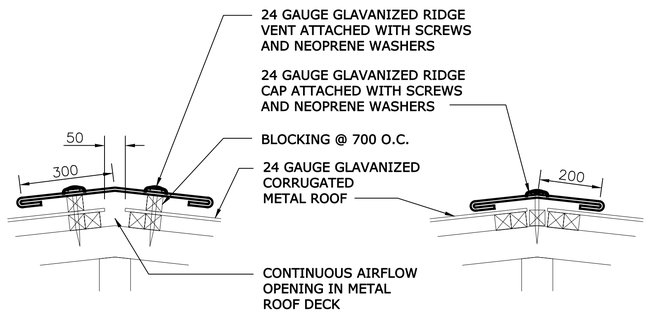


TYPICAL RIDGE VENT SECTION
NOT TO SCALE

TYPICAL RIDGE CAP SECTION
NOT TO SCALE

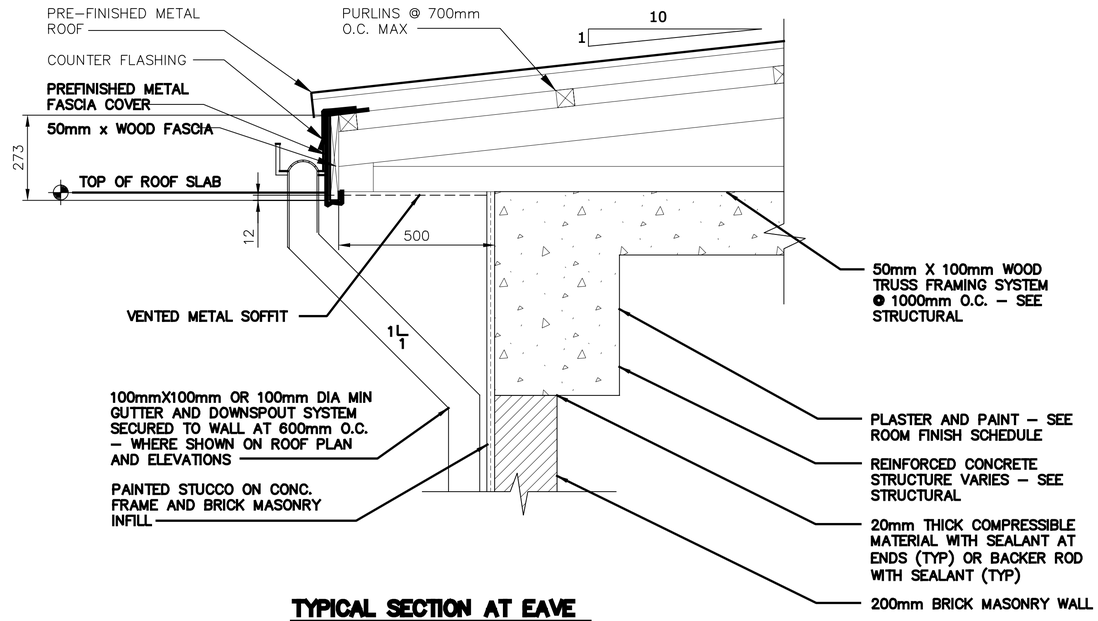


**TYPICAL SECTION AT EAVE**
FOR BUILDINGS C, D, H, AND I
SCALE= 1:10

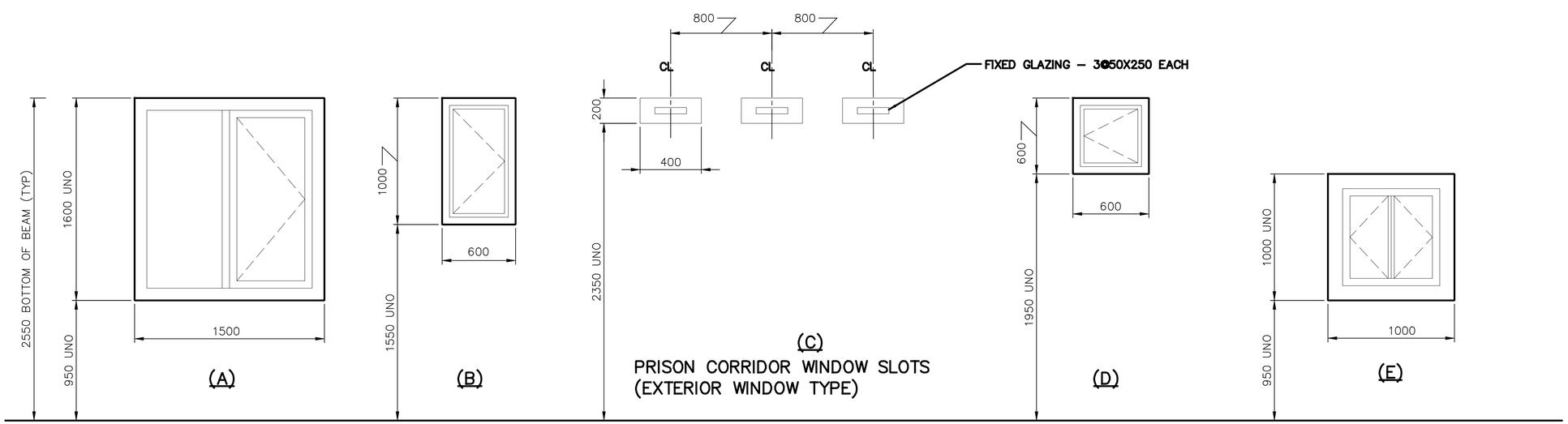


NOTES:
1.? ALL EXTERIOR WINDOWS SHALL UTILIZE MIN. 8mm THICK PLEXIGLASS.
2.? PROVIDE PROTECTIVE COATING AT ALL DISSIMILAR METALS CONTACT AREAS, AS APPROPRIATE.
3.? ALL OPERABLE EXTERIOR WINDOWS SHALL BE PROVIDED WITH INSECT SCREENS.
4.? FIXED WINDOWS AND CLEARSTORY WINDOWS ARE SHOWN ON BUILDING ELEVATIONS AND SECTIONS.

0 .50 1.00
1:10

UNLESS OTHERWISE NOTED, LINEAR DIMENSIONS SHOWN ARE IN MILLIMETERS.

| SYMBOL | DESCRIPTION | DATE | APP |
|---|---|---|---|

DESIGNED BY: SH
DATE: 4 February 2009
DWN BY: JLK
SUBMITTED BY:
CHK BY: JLK
FILE NO.: AF08078-AR02DT

US Army Corps of Engineers
Afghanistan Engineer District

AFGHANISTAN NATIONAL POLICE (ANP) DISTRICT HEADQUARTERS COMPOUNDS – 1 STORY HQ
VARIOUS LOCATIONS, AFGHANISTAN
STANDARD DETAILS
WALL SECTION AND ROOF DETAILS

SHEET REFERENCE NUMBER:
SA–2

$DATE$
$FILE$

# GENERAL NOTES

## GENERAL

1. DESIGN REFERENCES:
   A. AMERICAN CONCRETE INSTITUTE (ACI) BUILDING CODE REQUIREMENTS OR REINFORCED CONCRETE (ACI 318).
   B. SPECIFICATION FOR STRUCTURAL STEEL BUILDINGS – ALLOWABLE STRESS DESIGN AND PLASTIC DESIGN (S335).
   C. AMERICAN WELDING SOCIETY (AWS) STRUCTURAL WELDING CODE – STEEL (AWS D 1.1).
   D. MASONRY STRUCTURAL DESIGN FOR BUILDINGS (TM–809–3).
   E. STEEL DECK INSTITUTE (SDI) DESIGN MANUAL FOR COMPOSITE DECKS, FORM DECKS, AND ROOF DECKS.
2. DIMENSIONS PROVIDED IN SECTIONS OR DETAILS AND ON PLAN AND ELEVATION VIEWS ARE SHOWN USING MILLIMETERS. UNLESS OTHERWISE NOTED.
3. ALL BUILDING ELEVATIONS ARE GIVEN AS REFERENCE ELEVATIONS TO THE FINISHED GROUND FLOOR ELEVATION. A REFERENCE FLOOR ELEVATION OF 0.000 IS USED FOR THE FINISHED GROUND FLOOR.
4. CONTRACTOR SHALL VERIFY ALL DIMENSIONS AND CONDITIONS AFFECTING THE WORK AT THE JOB SITE.
5. ALL STRUCTURAL WORK AND MATERIALS SHALL CONFORM TO THE REQUIREMENTS OF THE PROJECT SPECIFICATIONS.
6. DO NOT SCALE DRAWINGS.
7. FOR LOCATION AND DIMENSIONS OF PARTITIONS, DEPRESSIONS, GROOVES, SLEEVES, CURBS, OPENINGS, EMBEDDED OR ATTACHED ITEMS, REFER TO ARCHITECTURAL, MECHANICAL, ELECTRICAL, AND PLUMBING DRAWINGS.
8. FOR ADDITIONAL INFORMATION REFER TO INDIVIDUAL SHEETS FOR EACH STRUCTURE.
8 FOR ADDITIONAL INFORMATION REFER TO INDIVIDUAL SHEETS FOR EACH STRUCTURE.
9. METAL BUILDING SYSTEMS SHALL BE AS REQUIRED ON THE DRAWINGS AND NOTES.
10. FOOTING ELEVATIONS GIVEN ARE AT TOP OF FOOTING BASE.
11. ALL FOOTING EXCAVATIONS SHALL BE INSPECTED AND APPROVED BY THE CONTRACTING OFFICER OR HIS APPROVED AGENT PRIOR TO PLACING CONCRETE.

## CONCRETE

1. EMBEDDED MATERIAL:
   A. BEFORE PLACING CONCRETE, CARE SHALL BE TAKEN TO INSURE THAT ALL EMBEDDED ITEMS ARE IN POSITION AND SECURELY FASTENED IN PLACE.
   B. ELECTRIC CONDUITS AND PIPING TO BE EMBEDDED IN CONCRETE SHALL MEET THE APPLICABLE REQUIREMENTS OF ACI 318.
   C. WATERSTOPS, WHERE REQUIRED, SHALL BE MADE CONTINUOUS. ALL PROJECTING WATERSTOPS SHALL BE SUPPORTED AND PROTECTED FROM DAMAGE DURING CONSTRUCTION.
2. PROVIDE 20 MILLIMETER CHAMFER FOR ALL EXPOSED EDGES OF COLUMNS, BEAMS, WALLS AND ANY OTHER MEMBERS AS DIRECTED BY THE CONTRACTING OFFICER.
3. PROVIDE APPROPRIATE DEPRESSIONS IN SLABS FOR TILE OR OTHER SIMILAR MATERIALS. MAINTAIN FULL SLAB THICKNESS BELOW THESE DEPRESSIONS. SEE ARCHITECTURAL INTERIOR FINISH SCHEDULES, FLOOR PLANS, AND DETAILS FOR REQUIRED DEPRESSIONS.
4. JOINTS SHALL BE LOCATED IN ACCORDANCE WITH ACI–318.
5. FOR SLABS ON GRADE, CONTROL JOINTS SHALL BE LOCATED NOT MORE THAN 7.6 METERS APART IN EITHER DIRECTION UNLESS OTHERWISE NOTED.
6. CONSTRUCTION JOINTS FOR STRUCTURAL SLABS, BEAMS AND GIRDERS SHALL BE LOCATED WITHIN THE MIDDLE THIRD OF THEIR SPAN. JOINTS IN GIRDERS SHALL BE OFFSET A MINIMUM DISTANCE OF TWO TIMES THE WIDTH OF AN INTERSECTING BEAM.
7. A SET OF DRAWINGS SHOWING CONCRETE PLACING SEQUENCE AND LOCATION OF JOINTS SHALL BE SUBMITTED TO THE CONTRACTING OFFICER FOR APPROVAL PRIOR TO PREPARATION OF AFFECTED REINFORCING SHOP DRAWINGS.
8. ALL REINFORCING BARS SHALL BE PLACED IN ACCORDANCE WITH ACI BUILDING CODE (ACI–318).
9. ALL REINFORCING BARS SHALL BE DEFORMED BILLET–STEEL CONFORMING TO ASTM A 615, GRADE 60, OR APPROVED EQUAL WITH THE FOLLOWING MINIMUM REQUIREMENTS: MINIMUM YIELD STRENGTH 413 MPa (60000 PSI).
10. WELDED WIRE FABRIC SHALL BE COLD DRAWN CONFORMING TO ASTM A–185, GRADE 60, OR APPROVED EQUAL WITH THE FOLLOWING MINIMUM REQUIREMENTS: MINIMUM YIELD STRENGTH 413 MPa. (60000 PSI)
11. DETAILING OF REINFORCEMENT SHALL BE IN ACCORDANCE WITH THE LATEST ACI MANUAL FOR DETAILING (SP–66).
12. DIMENSIONS AND SPACING OF BARS ARE IN MILLIMETERS UNLESS OTHERWISE NOTED. THUS, ?920@300.
13. CONCRETE SHALL HAVE A MINIMUM 28 DAY COMPRESSIVE STRENGTH OF 28 MPa (4,000 PSI) AND CONTAIN ASTM C–150 TYPE I CEMENT UNLESS OTHERWISE NOTED.
14. REINFORCEMENT MAY BE MOVED WITH APPROVAL OF THE CONTRACTING OFFICER TO CLEAR PIPES, SEALS, RECESSES, EMBEDDED METALWORK, AND CONDUITS.
15. CLEAR CONCRETE COVER FOR REINFORCING BARS IN CAST–IN–PLACE CONCRETE SHALL BE PROVIDED AS FOLLOWS, UNLESS OTHERWISE NOTED:
    A. FOOTINGS OR BEAMS CAST AGAINST AND PERMANENTLY EXPOSED TO EARTH 75mm.
    B. FORMED SURFACES EXPOSED TO WEATHER OR EARTH:?
       (1).?916 BARS OR SMALLER 40mm?
       (2).ALL OTHERS 50mm
    C. FORMED SURFACES NOT EXPOSED DIRECTLY TO WEATHER OR EARTH:?
       (1). SLABS, WALLS 20mm?
       (2). BEAMS, GIRDERS, COLUMNS:PRINCIPAL REINFORCEMENT, TIES OR STIRRUPS 40mm
16. REFER TO DWG SS–4 FOR CONSTRUCTION JOINT (CJ) AND CONTROL JOINT (CJT) DETAILS.
17. REINFORCING BARS SHALL NOT BE BENT OR STRAIGHTENED IN A MANNER THAT WILL INJURE THE MATERIAL. BARS WITH KINKS OR IMPROPER BENDS SHALL NOT BE USED.
18. THE FIRST AND LAST BAR IN SLABS AND WALLS SHALL BE PLACED A MAXIMUM OF ONE–HALF OF THE BAR SPACING SHOWN UNLESS OTHERWISE NOTED.
19. THE CLEAR DISTANCE BETWEEN PARALLEL BARS IN A LAYER SHALL NOT BE LESS THAN THE NOMINAL DIAMETER OF THE BAR, NOR 33mm, THE CLEAR DISTANCE BETWEEN LONGITUDINAL BARS IN COLUMNS SHALL NOT BE LESS THAN 1.5 TIMES THE NOMINAL BAR DIAMETER NOR 40mm.
20. PROVIDE 1–?912 REBAR IN MID – DEPTH OF SLAB AT ALL RE–ENTRANT CORNERS.
21. PROVIDE SEALANT AT ALL CONTROL AND ISOLATION JOINTS. WHERE CONCRETE SLAB WORK WILL NOT BE COVERED BY SOME OTHER FINISH FLOOR MATERIAL PROVIDE TOOLED CONTROL JOINTS HAVING A RADIUS OF 3 MILLMETERS.
22. ALL CMU WALLS SHALL BE REINFORCED AS SHOWN ON THE DRAWINGS.

## STRUCTURAL STEEL

1. ALL METAL WORK SHOWN ON DRAWINGS SHALL BE FABRICATED OF STRUCTURAL STEEL UNLESS OTHERWISE NOTED.
2. DESIGN OF STRUCTURAL STEEL WORK SHALL BE IN ACCORDANCE WITH THE REQUIREMENTS OF THE SPECIFICATION FOR STRUCTURAL STEEL BUILDINGS–ALLOWABLE STRESS DESIGN AND PLASTIC DESIGN (S335).
3. ALL WELDING SHALL BE IN ACCORDANCE WITH THE APPLICABLE REQUIREMENTS OF THE CURRENT AWS, D1.1, STRUCTURAL WELDING CODE–STEEL.
4. WHERE WELD SIZE IS NOT CALLED OUT, USE AISC MINIMUM SIZE.
5. STRUCTURAL STEEL SHALL CONFORM TO THE REQUIREMENTS OF ASTM A500, GRADE B OR STRUCTURAL TUBING AND ASTM A36 FOR OTHER STRUCTURAL SHAPES (UNLESS OTHERWISE NOTED).
6. ALL BOLTED CONNECTIONS SHALL BE BEARING TYPE CONNECTIONS MADE WITH 19 DIAMETER BOLTS MEETING REQUIREMENTS OF ASTM A325, TYPE X (UNLESS NOTED OTHERWISE)
7. SHOP CONNECTIONS MAY BE EITHER BOLTED OR WELDED. ALL FIELD CONNECTIONS SHALL BE BOLTED UNLESS OTHERWISE SHOWN ON THE DRAWINGS.
8. UNLESS OTHERWISE NOTED BEAM END CONNECTIONS SHALL COMFORMTO A.I.S.C. STANDARD TWO ANGLE WEB CONNECTIONS. WHETHER BOLTED OR WELDED, EACH END CONNECTION SHALL BE CAPABLE OF SUPPORTING ONE–HALF THE TOTAL UNIFORM LOAD CAPACITY SHOWN IN THE ALLOWABLE UNIFORM LOAD TABLES, PART II , OF THE A.I.S.C. MANUAL OF STEEL CONSTRUCTION. HOLES WILL BE SHORT–SLOTTED IN THE OUTSTANDING ANGLE LEGS (THOSE CONNECTED TO THE SUPPORTING MEMBER) AND STANDARD OTHERWISE.
9. NO CONNECTION SHALL CONSIST OF LESS THAN 2–?919 BOLTS OR A WELD CAPABLE OF RESISTING 2720 KILOGRAMS.
10. ALL ANCHOR BOLTS SHALL BE ASTM A36, EXCEPT AS OTHERWISE NOTED.
11. STRUCTURAL STEEL DESIGN IS BASED ON ALLOWABLE STRESS DESIGN.

## LEGENDS AND NOTATIONS: (UNLESS OTHERWISE NOTED)

A. PLATE SIZES ARE GIVEN IN MILLIMETERS. THUS, PL 200 x 600 X 10

B. ROLLED STEEL SHAPES ARE INDICATED BY AISC METRIC NOTATION THUS, W200 x 150.

C. ANGLE SIZES ARE GIVEN IN MILLIMETERS. THUS, ∟100 x 100 x 10 x 600 LG.

D. WELDING NOTATION SIZE, LENGTH AND SPACING ARE GIVEN IN MILLIMETERS WITH SYMBOLS IN ACCORDANCE WITH AWS.

E. BOLT SIZE DIAMETERS ARE GIVEN IN MILLIMETERS. LENGTH IS GIVEN IN MILLIMETERS. THUS, ?919 X 300 LG.

## ABBREVIATIONS

| | |
|---|---|
| A.B. | ANCHOR BOLT |
| ADD | ADDED OR ADDITIONAL |
| AFF | ABOVE FINISH FLOOR |
| ARCH | ARCHITECTURAL |
| @ | AT THE RATE OF |
| BM | BEAM |
| BRG | BEARING |
| B OR BOT | BOTTOM |
| ℄ | CENTERLINE |
| CONC | CONCRETE |
| CJ | CONTROL JOINT |
| CJT | CONSTRUCTION JOINT |
| CIP | CAST–IN–PLACE |
| COL | COLUMN |
| CONT | CONTINUOUS |
| DIA OR ∅ | DIAMETER |
| DIR | DIRECTION |
| DWG | DRAWING |
| EE | EACH END |
| EF | EACH FACE |
| ⊕ OR ELEV | ELEVATION |
| ES | EACH SIDE |
| EW | EACH WAY |
| EJT | EXPANSION JOINT |
| FF | FAR FACE |
| FTG | FOOTING |
| FDN | FOUNDATION |
| GB | GRADE BEAM |
| H OR HORZ | HORIZONTAL |
| HP | HIGH POINT |
| IJ | ISOLATION JOINT |
| JT | JOINT |
| KSM | KILOGRAMS PER SQUARE METER |
| LG | LONG |
| LL | LOWER LAYER |
| LP | LOW POINT |
| MCJ | MASONRY CONTROL JOINT |
| M | METERS |
| MM | MILLIMETERS |
| MAX | MAXIMUM |
| MECH | MECHANICAL |
| MIN | MINIMUM |
| NF | NEAR FACE |
| NO OR # | NUMBER |
| NTS | NOT TO SCALE |
| O/C | ON CENTER |
| OPNG | OPENING |
| PC | PRECAST |
| PEJ | PREMOLDED EXPANSION JOINT |
| PL | PLATE |
| PSF | POUNDS PER SQUARE FOOT |
| PSI | POUNDS PER SQUARE INCH |
| REINF | REINFORCEMENT |
| REF | REFERENCE |
| REQ | REQUIRED |
| SCH | SCHEDULE |
| SHT | SHEET |
| SIM | SIMILAR |
| STD | STANDARD |
| SQ | SQUARE |
| T | TOP |
| TB | TIE BEAM |
| T & B | TOP AND BOTTOM |
| TOC | TOP OF CONCRETE |
| TOF | TOP OF FOOTING |
| TOS | TOP OF SLAB OR TOP OF STEEL |
| TYP | TYPICAL |
| UL | UPPER LAYER |
| UNO | UNLESS NOTED OTHERWISE |
| VERT | VERTICAL |
| WWF | WELDED WIRE FABRIC |
| WP | WORKING POINT |
| W/ | WITH |

UNLESS OTHERWISE NOTED, LINEAR DIMENSIONS SHOWN ARE IN MILLIMETERS.

| SYMBOL | DESCRIPTION | DATE | APP |
|---|---|---|---|

DESIGNED BY: TCP
DATE: 4 February 2009
DWN BY: TCP
SUBMITTED BY:
CHK BY: KGO
FILE NO.: AF06078–S801GN

US Army Corps of Engineers
Afghanistan Engineer District

AFGHANISTAN NATIONAL POLICE (ANP) DISTRICT HEADQUARTERS COMPOUNDS – 1 STORY HQ
VARIOUS LOCATIONS, AFGHANISTAN
STANDARD DETAILS
GENERAL NOTES AND ABBREVIATIONS

SHEET REFERENCE NUMBER:
SS–1

$DATE$
$FILE$

## SPLICES

LOCATION OF SOME SPLICES ARE SHOWN ON DRAWINGS. SPLICES NOT SHOWN ON DRAWINGS SHALL BE IN ACCORDANCE WITH THE APPLICABLE REQUIREMENTS FOR DETAILING REINFORCEMENT AND AS APPROVED BY THE CONTRACTING OFFICER.

WHEN REINFORCEMENT OF DIFFERENT SIZE SPLICES, THE LAP LENGTH IS GOVERNED BY THE SMALLER BAR UNLESS NOTED OTHERWISE.

WALL AND SLAB REINFORCEMENT SPLICES ARE TO BE MADE SO THAT REQUIRED CLEARANCES ARE MAINTAINED.

| TENSION LAP SPLICES | | |
|---|---|---|
| AS (PROVIDED) / AS (REQUIRED) | MAXIMUM % OF REBARS SPLICED WITHIN REQ. LAP LENGTH | |
| | 50 | 100 |
| EQUAL TO OR GREATER THAN 2 | CLASS A | CLASS B |
| LESS THAN 2 | CLASS B | CLASS B |

TENSION LAP SPLICE LENGTH SHALL BE AS FOLLOWS:

FOR CLASS "A" SPLICES 1.0 ld
FOR CLASS "B" SPLICES 1.3 ld

WHERE ld IS THE BASIC TENSION DEVELOPMENT LENGTH.

BASIC TENSION DEVELOPMENT ld (mm)& TENSION DOWEL EMBEDMENT LENGTH

| CONCRETE TYPE | OF BARS | BAR SIZE #3 | #4 | #5 | #6 | #7 | #8 | #9 | #10 | #11 |
|---|---|---|---|---|---|---|---|---|---|---|
| 28 MPa (4000 PSI) | TOP BARS | 400 | 500 | 600 | 700 | 800 | 1000 | 1200 | 1600 | 2000 |
| | OTHER | 300 | 400 | 450 | 600 | 600 | 750 | 950 | 1200 | 1500 |

NOTES:

1.? FOR BARS WITH CLEAR SPACING NOT LESS THAN 5X BAR DIAMETER AND WITH COVER FROM FACE OF MEMBER TO EDGE BARS, MEASURED IN THE PLANE OF THE BARS, NOT LESS THAN 2.5X BAR DIAMETER USE 0.8ld, BUT THE LAP SPLICE LENGTH SHALL NOT BE LESS THAN 300MM.

2.? TOP BARS ARE HORIZONTAL AND INCLINED REINFORCING BARS SO PLACED THAT MORE THAN 300MM. OF CONCRETE IS CAST IN THE MEMBER BELOW THE BARS.

STANDARD COMPRESSION LAP SPLICE LENGTH (MM)

| BAR SIZE | #3 | #4 | #5 | #6 | #7 | #8 | #9 | #10 | #11 |
|---|---|---|---|---|---|---|---|---|---|
| SPLICE LENGTH | 300 | 380 | 480 | 580 | 660 | 760 | 860 | 960 | 1070 |

BASIC COMPRESSION DEVELOPMENT (MM) & COMPRESSION DOWEL EMBEDMENT LENGTH

| CONCRETE | BAR SIZE #3 | #4 | #5 | #6 | #7 | #8 | #9 | #10 | #11 |
|---|---|---|---|---|---|---|---|---|---|
| 28 MPa (4000 PSI) | 200 | 250 | 300 | 360 | 420 | 480 | 550 | 610 | 680 |

ALL BARS MARKED CONTINUOUS SHALL BE PROPERLY LAPPED AT SPLICES AND CORNERS AND HOOKED AT NON-CONTINUOUS ENDS.

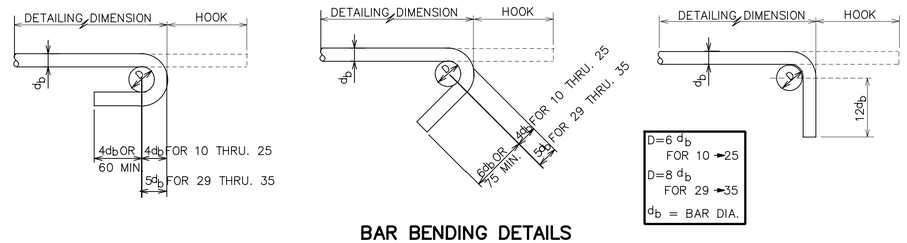


D=6 $d_b$ FOR 10 → 25
D=8 $d_b$ FOR 29 → 35
$d_b$ = BAR DIA.

## BAR BENDING DETAILS

DESIGN LOADS

SERVICE LOADS

DEAD ----------CALCULATED
LIVE ----------REFER TO INDIVIDUAL SHEETS

WIND LOAD

BASIC WIND VELOCITY IS 125 KM/H

EARTHQUAKE:

SITE SEISMICITY:
Ss = 1.65g, S1 = 0.75g

### EQUIVALENT REINFORCING BAR SIZE CHART

| ACI DESIGNATION | METRIC DIAMETER (MM) |
|---|---|
| #3 | 10 |
| #4 | 13 (ø12 ACCEPTABLE) |
| #5 | 16 |
| #6 | 19 (ø20 ACCEPTABLE) |
| #7 | 22 |
| #8 | 25 |
| #9 | 29 |
| #10 | 32 |
| #11 | 35 |

### EQUIVALENT STEEL FABRIC SIZE CHART

| WIRE REINFORCING INSTITUTE DESIGNATION | METRIC SIZES (MM) WIRE SPACING | WIRE DIAMETER |
|---|---|---|
| 6 X 6 – W2.9 X W2.9 | 150 X 150 | 5.0 X 5.0 |

### FILLET WELD STRENGTH *

| SIZE INCHES | STRENGTH KIPS/INCH |
|---|---|
| 1/8 | 1.86 |
| 3/16 | 2.78 |
| 1/4 | 3.71 |
| 5/16 | 4.64 |
| 3/8 | 5.57 |
| 7/16 | 6.50 |
| 1/2 | 7.42 |
| 9/16 | 8.35 |

* AWS A5.1 OR A5.5 E70 XX ELECTRODES FOR A36 MATCHING BASE MATERIAL

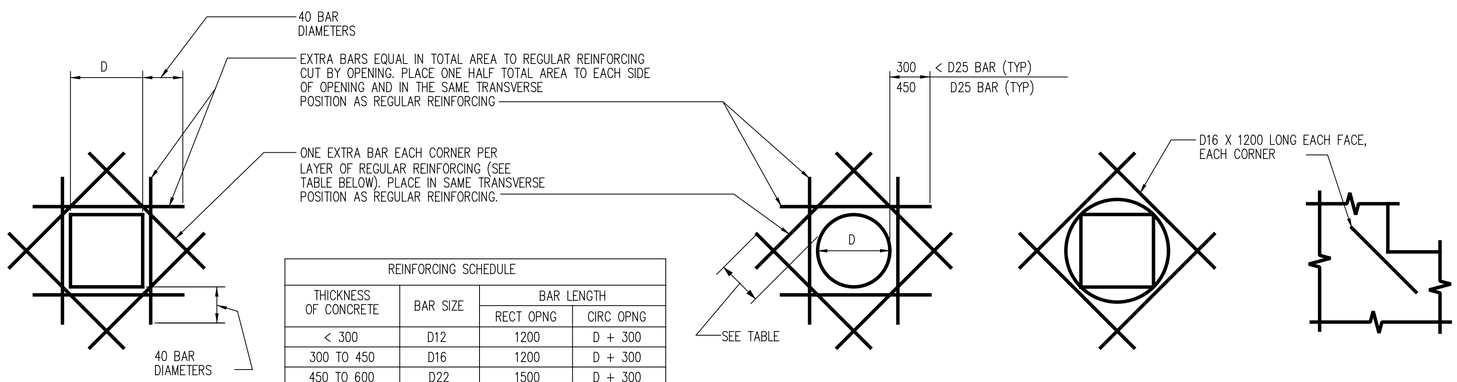


| REINFORCING SCHEDULE | | | |
|---|---|---|---|
| THICKNESS OF CONCRETE | BAR SIZE | BAR LENGTH RECT OPNG | CIRC OPNG |
| < 300 | D12 | 1200 | D + 300 |
| 300 TO 450 | D16 | 1200 | D + 300 |
| 450 TO 600 | D22 | 1500 | D + 300 |
| > 600 | D25 | 1800 | D + 450 |

RECTANGULAR OPENINGS

CIRCULAR OPENINGS

FOR OPENINGS 500 AND SMALLER IN DIAMETER OR DIAGONAL

ISOLATED RE-ENTRANT CORNERS

FOR OPENING LARGER THAN 500 IN DIAMETER OR DIAGONAL

## TYPICAL EXTRA REINFORCING AT OPENINGS IN WALLS AND SLABS

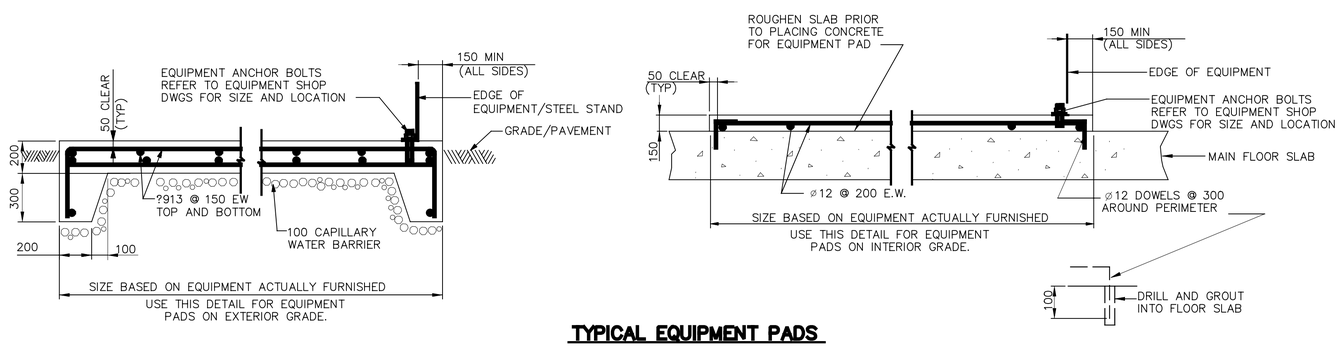


## TYPICAL EQUIPMENT PADS

NOT TO SCALE

UNLESS OTHERWISE NOTED, LINEAR DIMENSIONS SHOWN ARE IN MILLIMETERS.

| SYMBOL | DESCRIPTION | DATE | APP |
|---|---|---|---|

DESIGNED BY: KGO | DATE: 4 February 2009
DWN BY: KGO | SUBMITTED BY:
CHK BY: KMP | FILE NO.: AF06078-S802DT

US Army Corps of Engineers
Afghanistan Engineer District

AFGHANISTAN NATIONAL POLICE (ANP) DISTRICT HEADQUARTERS COMPOUNDS – 1 STORY HQ
VARIOUS LOCATIONS, AFGHANISTAN
STANDARD DETAILS
STANDARD DETAILS

SHEET REFERENCE NUMBER:
SS-2

$DATE$
$FILE$

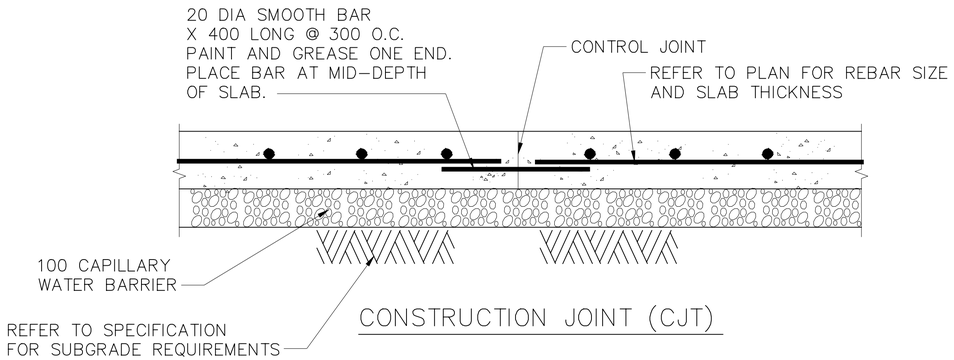


CONSTRUCTION JOINT (CJT)

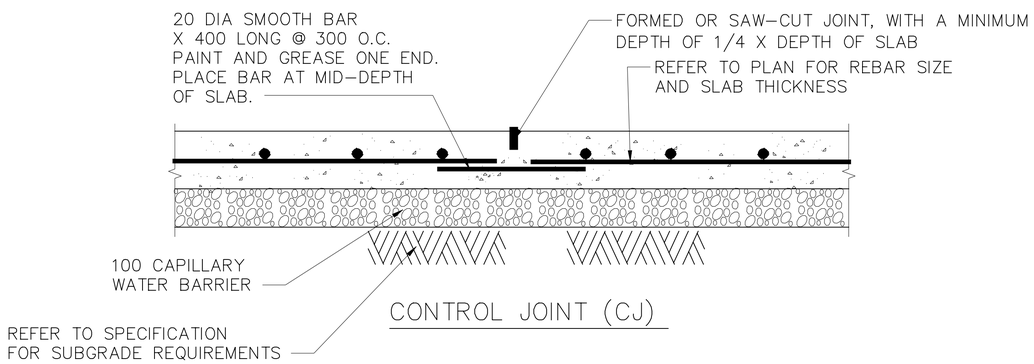


CONTROL JOINT (CJ)

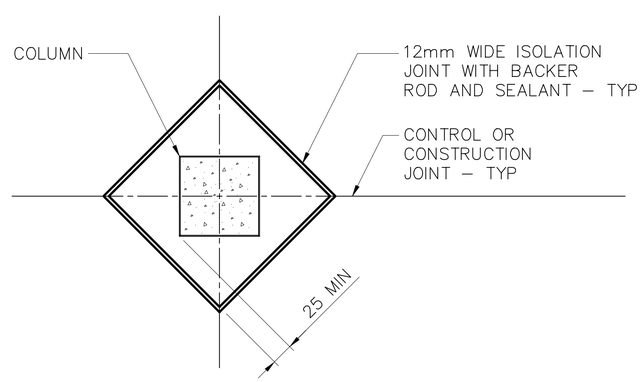


TYPICAL ISOLATION JOINT

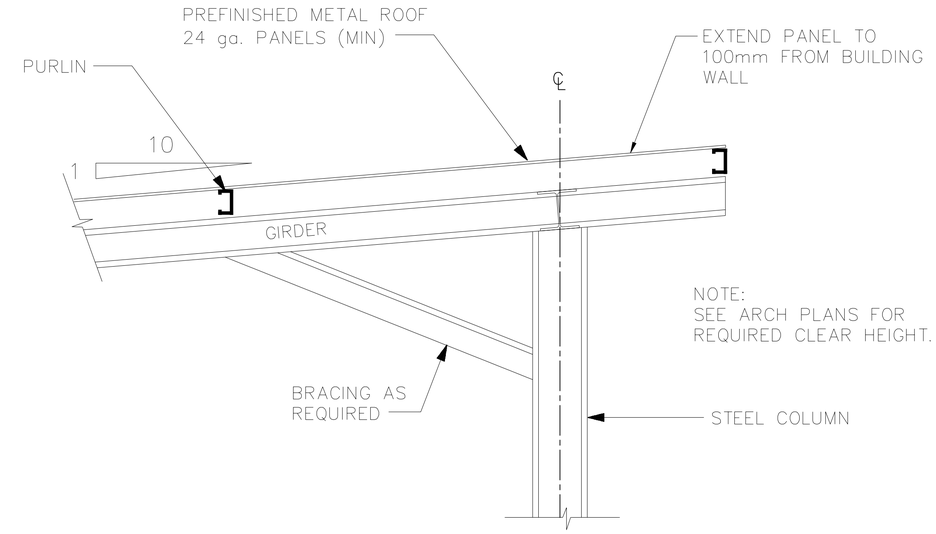


TYPICAL SUNSHADE FRAMING

SCALE= NONE

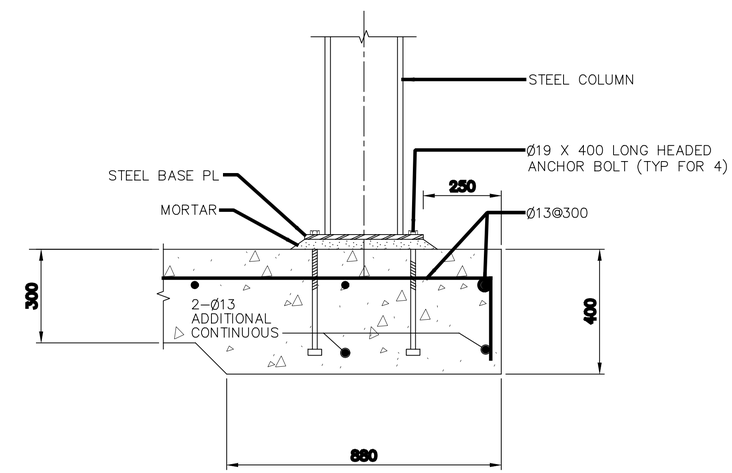


TYPICAL SUNSHADE COLUMN BASE

SCALE= NONE

TYPICAL SUNSHADE NOTES:

1. PER SPECIFICATION 01015, PARAGRAPH 3.6.6, DESIGN CALCULATIONS AND FABRICATION DRAWINGS FOR SUNSHADES SHALL BE SUBMITTED FOR APPROVAL.
2. FRAMING PLAN AND SECTION SHOWN ON THIS DRAWING ARE SCHEMATIC ONLY. ACTUA MEMBER SIZES AND LAYOUT SHALL BE AS REQUIRED BY DESIGN CALCULATIONS.
3. REFER TO ARCHITECTURAL DRAWINGS FOR ADDITIONAL INFORMATION.

UNLESS OTHERWISE NOTED, LINEAR DIMENSIONS SHOWN ARE IN MILLIMETERS.

| SYMBOL | DESCRIPTION | DATE | APP |
|---|---|---|---|

DESIGNED BY: TCP
DATE: 4 February 2009
DWN BY: TCP
SUBMITTED BY:
CHK BY: KGO
FILE NO.: AF06073–S9030T

US Army Corps of Engineers
Afghanistan Engineer District

AFGHANISTAN NATIONAL POLICE (ANP) DISTRICT HEADQUARTERS COMPOUNDS – 1 STORY HQ
VARIOUS LOCATIONS, AFGHANISTAN

STANDARD DETAILS
DETAILS

SHEET REFERENCE NUMBER:
SS–3

$DATE$
$FILE$

# PIPING AND HVAC LEGEND

| SYMBOL | DESCRIPTION |
|---|---|
| | THREE-WAY VALVE (ANY TYPE OF OPERATOR) |
| | GATE VALVE |
| | BALL VALVE |
| | GLOBE VALVE |
| | ANGLE GLOBE VALVE |
| | PRESSURE RELIEF VALVE |
| | PRESSURE-TEMPERATURE RELIEF VALVE |
| | BALANCING COCK |
| | BUTTERFLY VALVE |
| | CHECK VALVE |
| | UNION (SCREWED) |
| | PRESSURE CONTROL VALVE (SELF-CONTAINED) |
| S | SOLENOID VALVE |
| M | MOTOR OPERATED CONTROL VALVE |
| | AIR ELIMINATOR |
| AAV | AIR VENT, AUTOMATIC |
| | AIR VENT, MANUAL |
| | BACK PRESSURE VALVE |
| | PRESSURE REDUCING VALVE |
| | "Y" STRAINER |
| | AIR VALVE |
| | TEMPERATURE REGULATING VALVE |
| | EXPANSION VALVE, HAND |
| | EXPANSION VALVE, THERMOSTATIC |
| T | THERMOMETER, DIAL TYPE |
| T | THERMOMETER, VERTICAL TYPE |
| P | PRESSURE GAGE |
| | RISER DOWN (ELBOW) |
| | RISER UP (ELBOW) |
| | PITCH DOWN IN DIRECTION OF FLOW |
| | RISE OR DROP |
| CHS | CHILLED WATER SUPPLY |
| CHR | CHILLED WATER RETURN |
| C | CONDENSATE DRAIN |

| SYMBOL | DESCRIPTION |
|---|---|
| | BRANCH CONNECTION OUT OF TOP |
| | BRANCH CONNECTION OUT OF BOTTOM |
| | BRANCH CONNECTION OUT OF SIDE |
| | CAP ON END OF PIPE |
| | CONCENTRIC REDUCER |
| | ECCENTRIC REDUCER |
| | ANCHOR POINT |
| | FLEXIBLE CONNECTION |
| FS | FLOW SWITCH |
| | EXPANSION JOINT |
| | FLUSH VALVE |
| HB HB | HOSE BIBB |
| | WATER FIXTURE |
| | MIXING FAUCET COLD & HOT WATER |
| DV | DRAIN VALVE |
| | SIGHT GLASS |
| FM | FLOW METER |
| | PET COCK |
| | FLOW DIRECTION |
| | INLINE-PUMP |
| | CALIBRATED BALANCE VALVE |
| T | AQUASTAT |
| M | MOTOR OPERATED BUTTERFLY VALVE |
| | CEILING FAN |
| | OSCILATING WALL FAN |

# ABBREVIATIONS

| | |
|---|---|
| AAV | AIR VENT AUTOMATIC |
| AC | AIR CONDITIONING UNIT |
| ACMH | ACTUAL CUBIC METERS PER HOUR |
| ACC | AIR COOLED CHILLER |
| ACCU | AIR COOLED CONDENSING UNIT |
| AF | AIR FILTER |
| AFF | ABOVE FINISHED FLOOR |
| AD | AREA DRAIN |
| AHU | AIR HANDLING UNIT |
| AP | ACCESS PANEL |
| BF | BOTTOM FLAT |
| BD | BALANCING DAMPER |
| BDD | BACKDRAFT DAMPER |
| BFP | BACKFLOW PREVENTER |
| BHP | BRAKE HORSEPOWER |
| BOD | BOTTOM OF DUCT |
| °C | DEGREES CELSIUS |
| CD | CEILING DIFFUSER |
| CF | CEILING FAN |
| CHW | CHILLED WATER |
| CLG | CEILING |
| CM | CENTIMETER |
| CMH | CUBIC METER PER HOUR |
| CONN | CONNECTION |
| CONT | CONTINUATION |
| CU | CONDENSING UNIT |
| CW | CHILLED WATER COOLING COIL |
| D | DROP/DEPTH |
| DB | DRY BULB |
| DET | DETAIL |
| DIA | DIAMETER |
| DH | DUCT HEATER |
| DIFF | DIFFERENTIAL |
| DG | DOOR GRILLE |
| DN | DOWN |
| DWG | DRAWING |
| DX | DIRECT EXPANSION |
| EA | EXHAUST AIR |
| EAT | ENTERING AIR TEMPERATURE |
| EDB | ENTERING DRY BULB |
| EDH | ELECTRIC DUCT HEATER |
| EF | EXHAUST FAN |
| EG | EXHAUST GRILLE |
| EH | ELECTRICAL CABINET HEATER |
| EL | ELEVATION |
| ELEC | ELECTRICITY/ELECTRICAL |
| EQUIP | EQUIPMENT |
| ER | EXHAUST REGISTER |
| EWB | ENTERING WET BULB |
| EWH | ELECTRIC WATER HEATER |
| EWT | ENTERING WATER TEMPERATURE |
| EXH | EXHAUST |
| EXT | EXTERNAL/EXTERIOR |
| FCO | FLOOR CLEAN OUT |
| FCU | FAN COIL UNIT |
| FCV | FLOW CONTROL VALVE |
| FD | FLOOR DRAIN/FIRE DAMPER |
| FIN | FINISHED |
| FL | FLOOR |
| FOS | FUEL OIL SUPPLY |
| FOR | FUEL OIL RETURN |
| FS | FLOOR SINK |
| FSD | COMBINATION FIRE/SMOKE DAMPER |
| GA | GAUGE |
| HB | HOSE BIBB |
| HC | HEATING COIL |
| HORIZ | HORIZONTAL |
| HP | HORSEPOWER |
| HR | HOUR |
| HVAC | HEATING, VENTILATING & AIR CONDITIONING |
| HZ | HERTZ |
| ID | INSIDE DIAMETER |
| IH | INTAKE HOOD |
| IS | INERTIAL SEPARATOR |
| INV.EL. | INVERT ELEVATION |
| KG | KILOGRAM |
| KH | KITCHEN HOOD |
| KW | KILOWATT |
| KPa | KILO PASCALS |

| | |
|---|---|
| LAT | LEAVING AIR TEMPERATURE |
| LAV | LAVATORY |
| LFACP | LOCAL FIRE ALARM CONTROL PANEL |
| LPM | LITERS PER MINUTE |
| LPH | LITERS PER HOUR |
| LS | LEVEL SWITCH |
| LVG | LEAVING |
| LVR | LOUVER |
| M | METER |
| $M^2$ | SQUARE METER |
| $M^3$ | CUBIC METER |
| MAX | MAXIMUM |
| MECH | MECHANICAL |
| MIN | MINIMUM |
| MISC | MISCELLANEOUS |
| MM | MILLIMETER |
| MVD | MANUAL VOLUME DAMPER |
| NC | NORMALLY CLOSED |
| NFPA | NATIONAL FIRE PROTECTION ASSOCIATION |
| NO | NORMALLY OPEN/NUMBER |
| NOM | NOMINAL |
| NTS | NOT TO SCALE |
| OA | OUTSIDE AIR |
| OC | ON CENTER |
| OD | OVERFLOW DRAIN |
| OI | OIL INTERCEPTOR |
| OWF | OSCILATING WALL FAN |
| $\phi$ | PHASE |
| P | PUMP |
| PD | PRESSURE DIFFERENTIAL |
| PH | PROPANE SPACE HEATER |
| PRESS | PRESSURE |
| PRV | PRESSURE REDUCING VALVE |
| PS | PRESSURE SWITCH |
| QTY | QUANTITY |
| R | RISE |
| RA | RETURN AIR |
| RC | REFRIGERATION COOLER |
| RD | ROOF DRAIN |
| REQD | REQUIRED |
| RF | RETURN FAN |
| RG | RETURN GRILLE |
| RH | RELATIVE HUMIDITY |
| RL | REFRIGERANT LIQUID |
| RM | ROOM |
| RPM | REVOLUTIONS PER MINUTE |
| RR | RETURN REGISTER |
| RS | REFRIGERANT SUCTION |
| S | SOIL/SOUTH/SECOND |
| SA | SUPPLY AIR |
| SD | SUPPLY AIR DIFFUSER |
| SENS | SENSIBLE |
| SF | SUPPLY FAN |
| SG | SUPPLY GRILLE |
| SH | SHEET |
| SMACNA | SHEET METAL AND AIR CONDITIONING CONTRACTORS NATIONAL ASSOCIATION |
| SOV | SHUT-OFF VALVE |
| SP | STATIC PRESSURE |
| SQ FT | SQUARE FOOT/SQUARE FEET |
| SR | SUPPLY REGISTER |
| SST | SATURATED SUCTION TEMPERATURE |
| TCP | TEMPERATURE CONTROL PANEL |
| TCV | TEMPERATURE CONTROL VALVE |
| TEMP | TEMPERATURE |
| TG | TRANSFER GRILLE |
| TK | TANK |
| TP | TRAP PRIMER |
| TYP | TYPICAL |
| UC | UNDERCUT DOOR |
| UH | UNIT HEATER |
| UL | UNDERWRITER'S LABORATORIES |
| V | VOLTS |
| VEL | VELOCITY |
| VH | VENT HOOD |
| WCCU | WATER COOLED CONDENSING UNIT |
| WG | WATER GAGE |

# GENERAL NOTES:

1. SEE ARCHITECTURAL DRAWINGS FOR EXACT LOCATION OF LOUVERS, EQUIPMENT PADS AND SUPPORT PLATFORMS.
2. SEE ARCHITECTURAL REFLECTED CEILING PLAN FOR EXACT LOCATION OF DIFFUSERS, REGISTERS, AND GRILLES.
3. INSULATE DUCTWORK AND REFRIGERANT PIPING SYSTEMS IN ACCORDANCE WITH SPEC. SECTION 01015, THERMAL INSULATION FOR MECHANICAL SYSTEMS.
4. ALL DIMENSIONS SHOWN IN mm UNLESS INDICATED OTHERWISE.
5. ALL DUCT DIMENSIONS SHOWN ON THE DRAWINGS ARE CLEAR INSIDE DIMENSIONS.
6. MOUNT WALL THERMOSTATS 1.5M ABOVE FINISHED FLOOR.
7. OUTDOOR CONDENSING UNITS SHALL BE INSTALLED ON 300 HIGH STEEL PLATFORM ON A CONCRETE PAD AND PROVIDED WITH VIBRATION PADS.

# CONTROL LEGEND

| SYMBOL | DESCRIPTION |
|---|---|
| M | MOTORIZED CONTROL DAMPER |
| | CONTROL CONNECTION |
| S/S | START/STOP CONTROL |
| H | HUMIDISTAT, TWO POSITION |
| Hm | HUMIDISTAT, MODULATING |
| H | HUMIDITY SENSOR |
| SD | SMOKE DETECTOR |
| $T_2$ | THERMOSTAT, TWO POSITION |
| T | SPACE THERMOSTAT |
| FS | FLOW SWITCH |
| TI | TEMPERATURE INDICATOR |
| $T_S$ | SPACE TEMPERATURE SENSOR |

UNLESS OTHERWISE NOTED, LINEAR DIMENSIONS SHOWN ARE IN MILLIMETERS.

| SYMBOL | DESCRIPTION | DATE | ASB |
|---|---|---|---|

DESIGNED BY: RMS
DWN BY: RMS
CHK BY: SE
DATE: 4 February 2009
SUBMITTED BY:
FILE NO.: AF06073-MH01GN

US Army Corps of Engineers
Afghanistan Engineer District

AFGHANISTAN NATIONAL POLICE (ANP) DISTRICT HEADQUARTERS COMPOUNDS – 1 STORY HQ
VARIOUS LOCATIONS, AFGHANISTAN

STANDARD DETAILS
LEGENDS AND ABBREVIATIONS

SHEET REFERENCE NUMBER:
SM-1

$DATE$
$FILE$

## ELECTRIC CABINET/UNIT HEATER SCHEDULE

EH X–X | UH X–X

| EQUIPT. NO. | LOCATION (1) | DISCHARGE | CAPACITY (KW) | AIR FLOW (CMH) | ELECTRICAL DATA HP | VOLTS | PH | HZ | TEMP. RISE DEG C | SOUND POWER dBA | REMARKS |
|---|---|---|---|---|---|---|---|---|---|---|---|
| EH–A–1 | CHIEF'S TOILET | HORIZONTAL | 1.5 | 136 | 50 W | 220 | 1 | 50 | 30 | | WALL MOUNTED CABINET HEATER |
| EH–A–2 | TOILETS (2) | HORIZONTAL | 1 | 68 | 40 W | 220 | 1 | 50 | 40 | | WALL MOUNTED CABINET HEATER |
| UH–A–1 | TOILETS/ SHOWERS | HORIZONTAL | 3.0 | 510 | 1/20 | 220 | 1 | 50 | 17 | | WALL MOUNTED UNIT HEATER SEE DETAIL C ON SHT. SM3. |
| UH–C–1 | GUARD SHACK | HORIZONTAL | 4 | 425 | 1/30 | 220 | 1 | 50 | 10 | | FLOOR MOUNTED CABINET HEATER |
| UH–E–1 | WELL HOUSE | HORIZONTAL | 3.0 | 510 | 1/20 | 220 | 1 | 50 | 17 | | WALL MOUNTED UNIT HEATER SEE DETAIL C ON SHT. SM3. |

(1) SEE PLANS FOR LOCATION AND QUANTITY.

## EXHAUST FAN SCHEDULE

EF A–X

| EQUIPT. NO. | LOCATION | AIR QUANTITY CMH | S.P. MM–W.G. | FAN TYPE | ELECTRICAL DATA HP | VOLTS | PH | HZ | CONTROL DIAGRAM | SOUND POWER dWA | REMARKS |
|---|---|---|---|---|---|---|---|---|---|---|---|
| EF–A–1 | CHIEF'S TOILET | 170 | 7 | CEILING CABINET | 80 WATTS | 220 | 1 | 50 | E1 | 50 | CEILING MOUNTED WITH GRAVITY BACKDRAFT DAMPER AND CEILING GRILL |
| EF–A–2 | TOILETS (3) | 85 | 7 | CEILING CABINET | 80 WATTS | 220 | 1 | 50 | E1 | 50 | CEILING MOUNTED WITH GRAVITY BACKDRAFT DAMPER AND CEILING GRILL |
| EF–A–3 | PRISONER CELLS | 510 | 7 | WALL CENTRIFUGAL | 1/12 | 220 | 1 | 50 | E2 | 50 | WALL MOUNTED WITH BACKDRAFT DAMPER |
| EF–A–4 | MEN'S TOILET | 510 | 7 | WALL CENTRIFUGAL | 1/12 | 220 | 1 | 50 | E2 | 50 | WALL MOUNTED WITH BACKDRAFT DAMPER |
| EF–A–5 | KITCHEN | 3,300 | 14 | ROOF CENTRIFUGAL UPBLAST | 3/4 | 220 | 1 | 50 | E2 | 65 | RATED FOR 175° C AND KITCHEN HOOD |
| EF–A–6 | KITCHEN | 1,700 | 8 | WALL CENTRIFUGAL | 1/4 | 220 | 1 | 50 | E4 | 60 | WALL MOUNTED WITH BACKDRAFT DAMPER |
| EF–E–1 | WELL HOUSE | 600 | 10 | WALL CENTRIFUGAL | 1/4 | 220 | 1 | 50 | E4 | 65 | WALL MOUNTED WITH BACKDRAFT DAMPER |
| SF–A–1 | KITCHEN | 3,300 | 8 | INLINE CENTRIFUGAL | 1/2 | 220 | 1 | 50 | E2 | 60 | CEILING MOUNTED W/GRAVITY BACKDRAFT DAMPER |

## CEILING AND OSCILLATING WALL FAN SCHEDULE

CF A–1 | OWF A–1

| EQUIPT. NO. | AIR QUALITY CMH | FAN TYPE | ELECTRICAL DATA HP | VOLTS | PH | HZ | REMARKS |
|---|---|---|---|---|---|---|---|
| CF–A–1 | 13,600 | CEILING FAN | 85 WATTS | 220 | 1 | 50 | CEILING MOUNTED |
| OWF-A-1 | 5,000 | OSCILLATING WALL FAN | 1/4 | 220 | 1 | 50 | WALL MOUNTED |
| | | | | | | | |

## AIR HANDLING UNIT SCHEDULE

| EQUIPT. NO. | LOCATION | DISCHARGE | CAPACITY (KW) | AIR FLOW (CMH) | ELECTRICAL DATA HP | VOLTS | PH | HZ | TEMP. RISE DEG C | SOUND POWER dBA | REMARKS |
|---|---|---|---|---|---|---|---|---|---|---|---|
| AHU–1 | CELLS | VERTICAL | 5.2 | 1200 | .25 | 220 | 1 | 50 | 35 | 45 | DUCT MOUNTED HEATER |

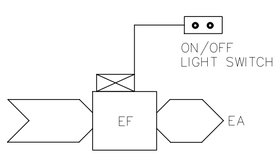


### TEMPERATURE CONTROL DIAGRAM E1

E1 SEQUENCE OF CONTROL

START–UP

THE EXHAUST FAN SHALL BE STARTED MANUALLY FROM A LOCAL START/STOP LIGHT SWITCH.

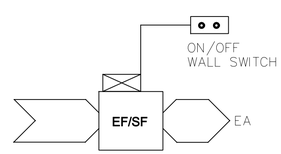


### TEMPERATURE CONTROL DIAGRAM E2

E2 SEQUENCE OF CONTROL

START–UP

THE EXHAUST/SUPPLY FAN SHALL BE STARTED MANUALLY FROM A LOCAL START/STOP LIGHT SWITCH.

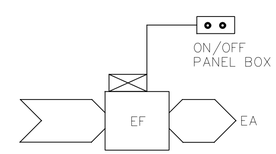


### TEMPERATURE CONTROL DIAGRAM E3

E3 SEQUENCE OF CONTROL

START–UP

THE EXHAUST FAN SHALL BE STARTED MANUALLY FROM AN THE ON–OFF SWITCH IN THE PANEL BOX.

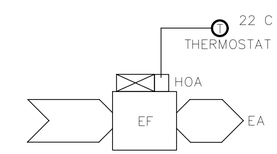


### TEMPERATURE CONTROL DIAGRAM E4

E4 SEQUENCE OF CONTROL

START–UP

THE EXHAUST FAN SHALL BE STARTED MANUALLY BY PLACING THE HAND–OFF–AUTO (HOA) SWITCH IN THE HAND POSITION. IN THE AUTO POSITION, FAN OPERATION SHALL BE CONTROLLED OFF AN ADJUSTABLE THERMOSTAT.

| SYMBOL | DESCRIPTION | DATE | APP |
|---|---|---|---|

DESIGNED BY: RMS | DATE: 4 February 2009
DWN BY: JRP | SUBMITTED BY:
CHK BY: JLK | FILE NO.: AF06073–MH02SC

US Army Corps of Engineers
Afghanistan Engineer District

AFGHANISTAN NATIONAL POLICE (ANP) DISTRICT HEADQUARTERS COMPOUNDS – 1 STORY HQ
VARIOUS LOCATIONS, AFGHANISTAN
STANDARD DETAILS
MECHANICAL SCHEDULES

SHEET REFERENCE NUMBER:
SM–2

$DATE$
$FILE$

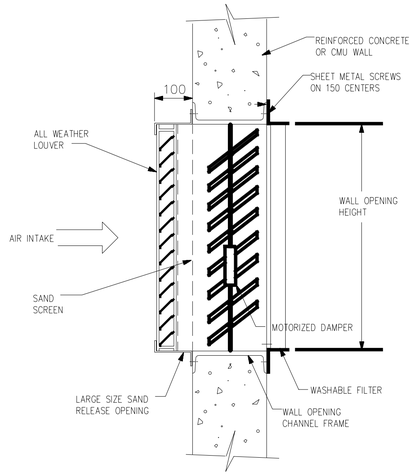


**SAND TRAP TYPE LOUVER** (A / SM3)
NOT TO SCALE

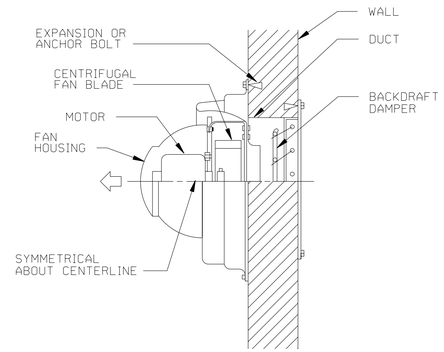


**POWER WALL VENTILATOR DETAIL** (B / SM3)
NOT TO SCALE

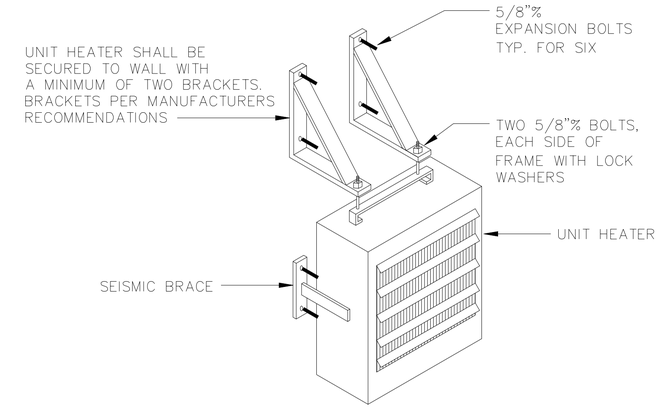


**ELECTRIC UNIT HEATER DETAIL** (C / SM3)
NOT TO SCALE

**NOT USED** (D / SM3)
NOT TO SCALE

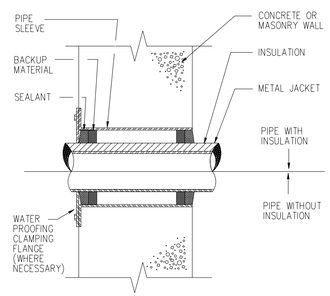


**PIPE SLEEVE THRU WALL** (E / SM3)
NOT TO SCALE

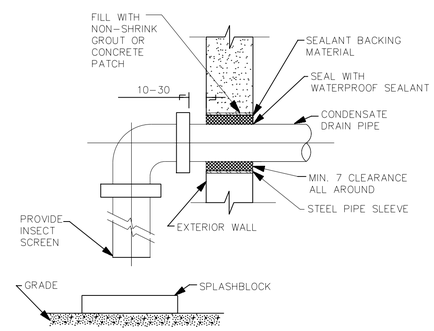


**CONDENSATE DRAIN THRU EXTERIOR WALL** (F / SM3)
NOT TO SCALE

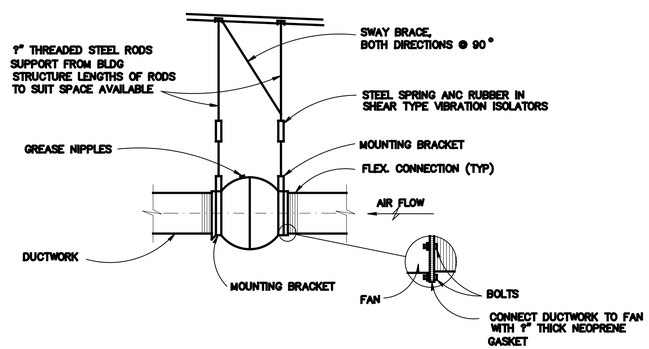


**CENTRIFUGAL IN-LINE FAN** (G / SM3)
NOT TO SCALE

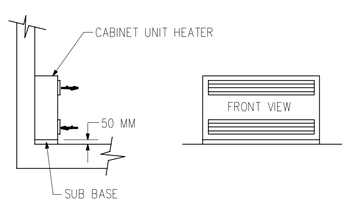


**CABINET UNIT HEATER** (H / SM3)
NOT TO SCALE

UNLESS OTHERWISE NOTED, LINEAR DIMENSIONS SHOWN ARE IN MILLIMETERS.

| SYMBOL | DESCRIPTION | DATE | APP |
|---|---|---|---|

| | | |
|---|---|---|
| DESIGNED BY: RMS | DATE: 4 February 2009 | |
| DWN BY: RMS | SUBMITTED BY: | |
| CHK BY: SE | FILE NO.: AFD6078-MH03DT | |

US Army Corps of Engineers
Afghanistan Engineer District

**AFGHANISTAN NATIONAL POLICE (ANP) DISTRICT HEADQUARTERS COMPOUNDS – 1 STORY HQ**
VARIOUS LOCATIONS, AFGHANISTAN

**STANDARD DETAILS**
MECHANICAL STANDARD DETAILS

SHEET REFERENCE NUMBER:
SM-3

$DATE$
$FILE$

## LEGEND

- GATE VALVE
- GLOBE VALVE
- BUTTERFLY VALVE
- CHECK VALVE
- STOP CHECK VALVE
- PLUG VALVE
- 3-WAY VALVE
- RELIEF OR SAFETY VALVE
- ANGLE VALVE
- ANGLE GLOBE VALVE
- BALANCING COCK
- AIR VALVE
- HOSE GATE DRAIN VALVE
- EXPANSION VALVE
- AAV — AIR VENT, AUTOMATIC
- AIR VENT, MANUAL
- M — MOTORIZED VALVE (MODULATING OR TWO POSITION)
- S — SOLENOID VALVE
- M — 3-WAY MOTORIZED VALVE (MOD. OR 3-POSITION)
- S — 3-WAY SOLENOID VALVE
- TEMPERATURE REGULATING VALVE
- AIR ELIMINATOR
- BACK PRESSURE VALVE
- PRESSURE REDUCING VALVE
- D.V. — DRAIN VALVE
- SLEEVE COUPLING (SC)
- BP — BACKFLOW PREVENTER
- WHA "A" — WATER HAMMER ARRESTOR

## LEGEND

- P — PRESSURE GAUGE
- T — THERMOMETER, DIAL TYPE
- T — THERMOMETER, VERTICAL TYPE
- H.B. — HOSE BIBB, PLAN
- H.B. — HOSE BIBB, ELEV.
- W.H. — WALL HYDRANT
- CO — EXPOSED CLEANOUT
- FCO — FLOOR CLEANOUT
- WCO — WALL CLEANOUT
- BALL VALVE
- UNION
- FLANGE SET
- FLEXIBLE HOSE/CONNECTION
- Y-TYPE STRAINER
- SIGHT GLASS
- GAUGE GLASS W/COCKS
- FILTER / DRYER
- TANK AIR CONTROL FITTING
- CAPPED / PLUGGED CONNECTION
- REDUCER - INCREASER
- EXPANSION LOOP
- EXPANSION JOINT
- SUPPORT LOCATION
- PIPE TURNING DOWN
- PIPE TURNING UP
- FD — FLOOR DRAIN
- ROOF DRAIN
- POINT OF CONNECTION TO EXISTING SYSTEM

## LEGEND

- A — COMPRESSED AIR DROP
- HU — HUMIDIFIER
- I.F. — INSULATING FLANGE
- THERMAL RELIEF VALVE W/ SIGHT FLOW INDICATOR
- S — BASKET STRAINER
- W — WATER METER
- TS — FLOW CONTROL VALVE
- SAMPLE CONNECTION
- FIRE SAFETY VALVE
- NON - SURGE CHECK VALVE
- FLOW CONTROL VALVE
- P — PRESSURE REGULATING VALVE
- W — WATER SLUG VALVE (WSV)

## ABBREVIATIONS

| | |
|---|---|
| A A | AMERICAN DISABILITIES ACT |
| CO | EXPOSED CLEAN OUT |
| CW | COLD WATER |
| EWH | ELECTRIC WATER HEATER |
| FCO | FLOOR CLEAN OUT |
| FD | FLOOR DRAIN |
| FFE | FINISHED FLOOR ELEVATION |
| FS | FLOOR SINK |
| GWH | GAS WATER HEATER |
| HB | HOSE BIBB |
| HW | HOT WATER |
| HWR | HOT WATER CIRCULATION |
| N.C. | NORMALLY CLOSED |
| P | PUMP |
| S.R. | SHORT RADIUS |
| S.S. | STAINLESS STEEL |
| V | VENT |
| VTR | VENT THROUGH ROOF |
| W | WASTE |
| WCO | WALL CLEAN OUT |
| WH | WALL HYDRANT |

- SOIL OR WASTE PIPE ABOVE FLOOR
- SOIL OR WASTE PIPE BELOW FLOOR ( MIN. 50 SIZE )
- COLD WATER, DOMESTIC (PLAN)
- HOT WATER, DOMESTIC (PLAN)
- HOT WATER, CIRCULATION, DOMESTIC (PLAN)
- VENT PIPE
- C — CONDENSATE DRAIN
- CA — COMPRESSED AIR
- HPIW — HIGH PRESSURE INDUSTRIAL WATER
- IW — INDUSTRIAL WATER

## EQUIPMENT DESIGNATION

EF — EQUIPMENT TYPE
A-1 — EQUIPMENT NUMBER; BUILDING NUMBER

## DETAIL REFERENCE

X — REFERENCE DESIGNATION LETTER
X — DETAIL SHEET LOCATION

## PLUMBING FIXTURE SCHEDULE

| FIX. NO. | SYMBOL | FIXTURE NAME | C.W. | H.W. | WASTE (W) | VENT (V) | REMARKS |
|---|---|---|---|---|---|---|---|
| P1 | | EASTERN WATER CLOSET (FLUSH TANK) | 15 | -- | 100 | 50 | CW CONNECTION SHALL BE 25 UNLESS NOTED OTHERWISE. FLOOR OUTLET |
| P2 | | ABOLUTION (2 STATION) | 15 | -- | 50 | 32 | (2) COMPLETE WALL MOUNTED LAVATORY VALVE ASSEMBLIES AND TRIM MOUNTED 600mm A.F.F. |
| P3 | | LAVATORY | 15 | 15 | 32 | 32 | |
| P3A | | LAVATORY (2 STATION GANG) | 15 | 15 | 32 | 32 | |
| P4 | | MOP SINK (FLOOR MOUNT JANITOR TYPE) | 15 | 15 | 50 | 40 | DRAIN ON FLOOR OR AS INDICATED |
| P5 | | SHOWER | 15 | 15 | 40 | 32 | |
| P6 | | NOT USED | | | | | |
| P7 | | NOT USED | | | | | |
| P8 | | NOT USED | | | | | |
| P9 | | KITCHEN SINK | 15 | 15 | 40 | 32 | |
| P10 | | GREASE INTERCEPTOR | | | 80 | 50 | MANUAL CLEANING TYPE, WITH 135 LPM FLOW RATE |

## WATER HAMMER ARRESTOR SIZING CHART

| P.D.I. SYMBOL | FIXTURE UNIT RATING | NIPPLE SIZE (MM) | CHAMBER HEIGHT (MM) |
|---|---|---|---|
| A | 1-11 | 20 | 100 |
| B | 12-32 | 25 | 125 |
| C | 33-60 | 25 | 150 |
| D | 61-113 | 25 | 175 |
| E | 114-154 | 25 | 200 |
| F | 155-330 | 25 | 225 |

P. D. I. = PLUMBING AND DRAINAGE INSTITUTE.

GENERAL NOTES:

1. DRAINAGE PIPING LOCATED BELOW FLOORS SHALL BE ROUTED BELOW FOOTINGS UNLESS INDICATED OTHERWISE.
2. INTERIOR SOIL AND WASTE PIPING 80mm AND SMALLER SHALL BE ROUTED WITH A 2% SLOPE. INTERIOR SOIL AND WASTE PIPING 100mm AND LARGER SHALL BE ROUTED WITH A MINIMUM 1% SLOPE.
3. ALL DIMENSIONS SHOWN HERE AND ON PLANS ARE IN MM UNLESS INDICATED OTHERWISE.
4. MINIMUM BURIED PIPE SIZE SHALL BE 50 mm.
5. SEE STANDARD SHEET SM-1 FOR ADDITIONAL ABBREVIATIONS.
6. FOR FOOD SERVICE EQUIPMENT DESCRIPTION, SEE ARCHITECTURAL DRAWINGS.

| SYMBOL | DESCRIPTION | DATE | APP |
|---|---|---|---|

DESIGNED BY: RMS
DATE: 4 February 2009
DWN BY: JLK
SUBMITTED BY:
CHK BY: JLK
FILE NO.: AF06073-MP01GN

US Army Corps of Engineers
Afghanistan Engineer District

AFGHANISTAN NATIONAL POLICE (ANP) DISTRICT HEADQUARTERS COMPOUNDS – 1 STORY HQ
VARIOUS LOCATIONS, AFGHANISTAN
STANDARD DETAILS
LEGEND AND ABBREVIATIONS

SHEET REFERENCE NUMBER:
SP–1

$DATE$
$$FILE$

NOTES:
1. PIPING SHALL BE PLASTIC PVC TO MATCH WATER DISTRIBUTION SYSTEM.
2. CONTRACTOR SHALL INSTALL DIELECTRIC UNION BETWEEN CONNECTIONS OF DISSIMILAR METALS.

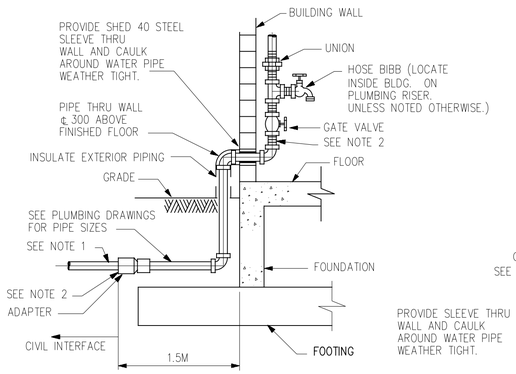


**WATER SERVICE ENTRANCE SIDE VIEW**

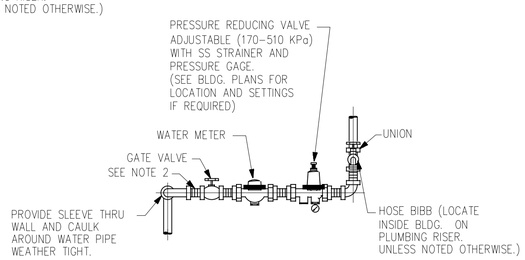


**WATER SERVICE ENTRANCE FRONT VIEW**

WATER SERVICE ENTRANCE DETAILS (A / SP2)
NOT TO SCALE

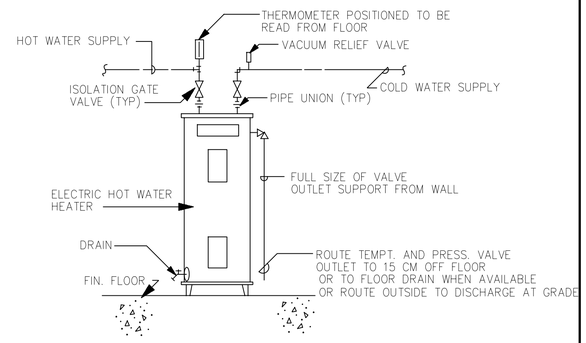


ELECTRIC WATER HEATER DETAIL (B / SP2)
NOT TO SCALE

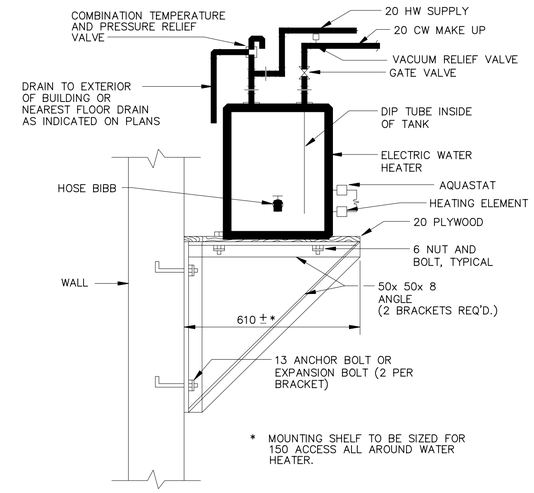


IF WATER HEATER COMES EQUIPPED WITH A MOUNTING BRACKET, CONTRACTOR WILL SUBMIT TO THE ENGINEER FOR APPROVAL, ALTERNATE INSTALLATION DETAIL AS RECOMMENDED BY HEATER MANUFACTURER FOR THE TYPE OF WALL (CMU,METAL STUD, ETC.) APPLICABLE

**WALL MOUNTED ELECTRIC WATER HEATER DETAIL** (C / SP2)
NOT TO SCALE

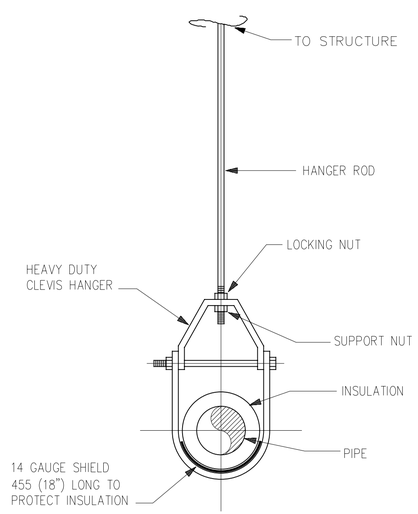


CLEVIS HANGER DETAIL (D / SP2)
NOT TO SCALE

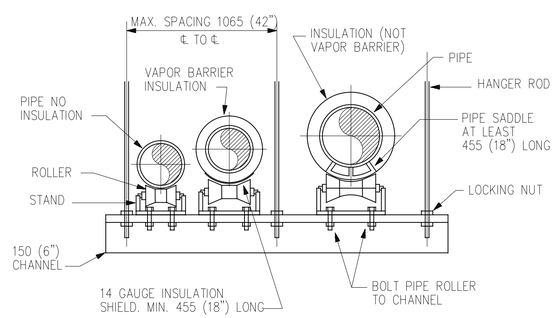


TRAPEZE HANGER DETAIL (E / SP2)
NOT TO SCALE

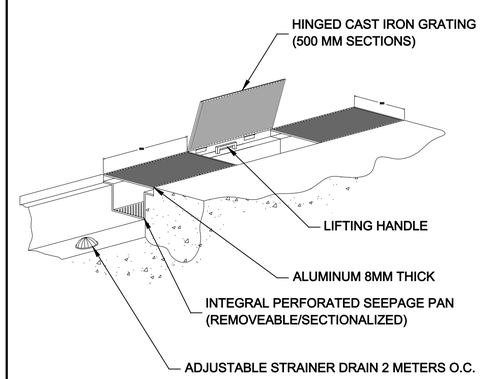


FLOOR TRENCH DRAIN DETAIL (F / SP2)
NOT TO SCALE

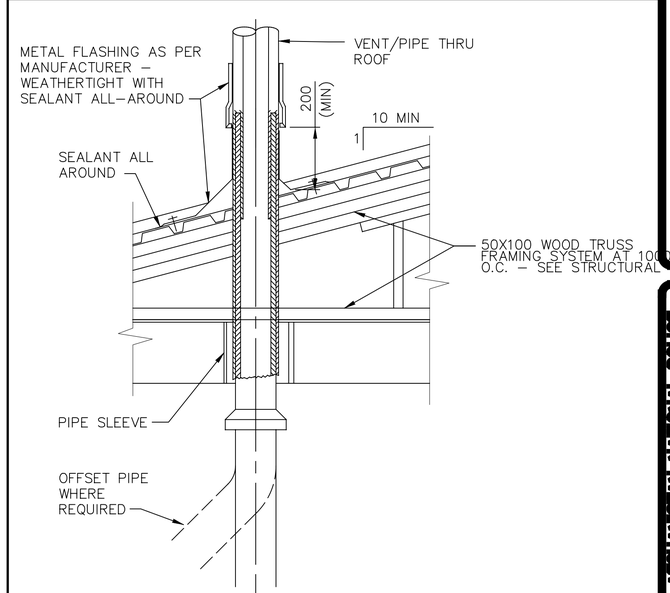


VENT THRU ROOF DETAIL (G / SP2)
NOT TO SCALE

UNLESS OTHERWISE NOTED, LINEAR DIMENSIONS SHOWN ARE IN MILLIMETERS.

| SYMBOL | DESCRIPTION | DATE | APP |
|---|---|---|---|

DESIGNED BY: RMS
DWN BY: RMS
CHK BY: SE
DATE: 4 February 2009
SUBMITTED BY:
FILE NO.: AF06078-MP02DT

US Army Corps of Engineers
Afghanistan Engineer District

AFGHANISTAN NATIONAL POLICE (ANP) DISTRICT HEADQUARTERS COMPOUNDS – 1 STORY HQ
VARIOUS LOCATIONS, AFGHANISTAN

STANDARD DETAILS
STANDARD PLUMBING DETAILS

SHEET REFERENCE NUMBER:
SP–2

$DATE$
$FILE$

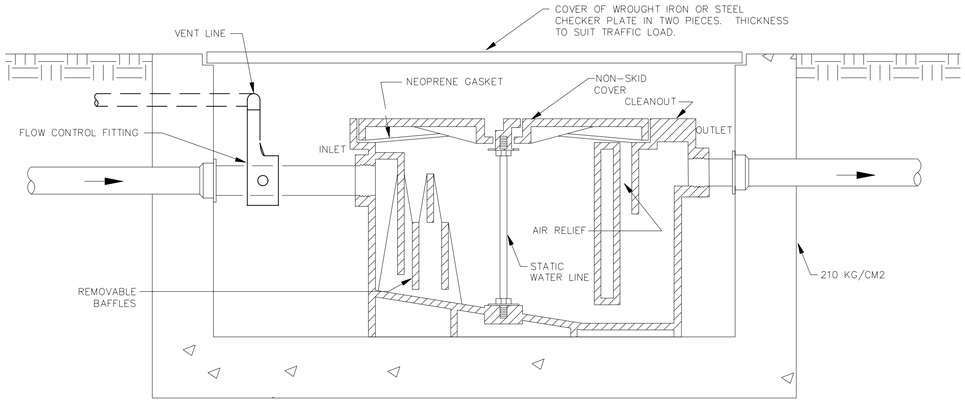


FLOW – 135 LPM
GREASE CAPACITY – 22 KG

GREASE INTERCEPTOR DETAIL **A** SP3

NOT TO SCALE

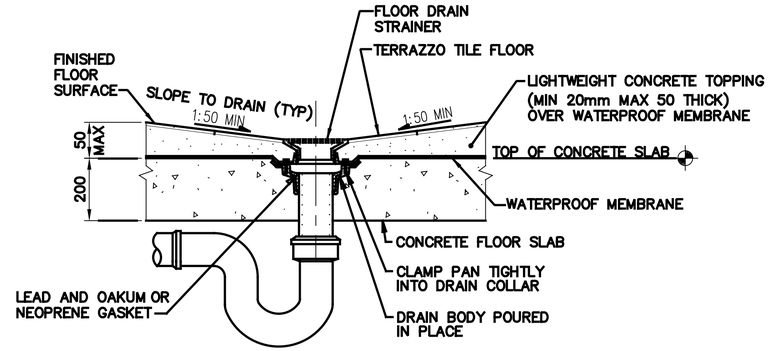


TYPICAL FLOOR DRAIN DETAIL **B** SP3

NOT TO SCALE

UNLESS OTHERWISE NOTED, LINEAR DIMENSIONS SHOWN ARE IN MILLIMETERS.

| SYMBOL | DESCRIPTION | DATE | APP |
|---|---|---|---|

DESIGNED BY: RMS
DATE: 4 February 2009
DWN BY: RMS
SUBMITTED BY:
CHK BY: SE
FILE NO.: AF06073-MP030T

US Army Corps of Engineers
Afghanistan Engineer District

AFGHANISTAN NATIONAL POLICE (ANP) DISTRICT HEADQUARTERS COMPOUNDS – 1 STORY HQ
VARIOUS LOCATIONS, AFGHANISTAN

STANDARD DETAILS
STANDARD PLUMBING DETAILS

SHEET REFERENCE NUMBER:
SP–3

$DATE$
$FILE$

# LEGEND

- FLUORESCENT LIGHT FIXTURE,
- LIGHT FIXTURES, FIXTURE MARK AS INDICATED
- EXIT SIGN, TYPE F FIXTURE, MTD 2.2M AFF
- EMERGENCY LIGHT, TYPE C FIXTURE, MTD 2.4M AFF
- WP,S — DUPLEX SOCKET OUTLET (13A, 250V), BS 1363
  S – A/C OR WATER HEATER SWITCH–RECEPTACLE COMBINATION
  WP – WEATHERPROOF
- J — JUNCTION BOX
- $S_{3,WP}$ — SWITCH, WP–WEATHERPROOF, 3–3 WAY, EP–EXPLOSION PROOF
- S — LIGHT SWITCH
- $S_F$ — EXHAUST FAN SWITCH
- $S_{CF}$ — CEILING FAN SWITCH
- 20 — SAFETY DISCONNECT SWITCH, SWITCH SHALL BE 1P56 ENCLOSURE, 20A UNO
- 1/3 — MOTOR (1/3 HP)
- $S_M$ — MANUAL MOTOR STARTER
- ELECTRIC CABINET/ UNIT HEATER
- EWH — ELECTRIC WATER HEATER
- LP–2 — HOMERUN, PNL LP, CIRCUIT 2
- LP–2 — HOMERUN, PNL LP, 3PH CKT, CIRCUIT 2
- COMBINATION LIGHTING AND POWER PANEL (LP), OR LOAD CENTER (LC)
- 400AT 600AF — 3 POLE, 600A ADJUSTABLE TRIP CIRCUIT BREAKER
- 150AT 3P — 3 POLE, 150A CIRCUIT BREAKER
- COMBINATION TELEPHONE/DATA OUTLET. SEE DETAIL SHEET SE–5 MOUNTED 0.5M AFF
- W — SINGLE TELEPHONE ONLY OUTLET, WALL MOUNTED 1.2m AFF
- TBB — TELEPHONE BACK BOARD (TVBB INDICATES TELEVISION BACKBOARD) (1200mmx600mmx12mm)UNLESS NOTED OTHERWISE
- EXOTHERMIC WELDED GROUND CONNECTION
- GROUND ROD (EARTH ELECTRODE) WITH EXOTHERMIC WELD CONNECTION, COPPER, 20mm DIA X 3.0m LENGTH
- EM 1 — ELECTRIC POWER MANHOLE, H INDICATES HANDHOLE.
- CM 1 — COMMUNICATIONS MANHOLE, H INDICATES HANDHOLE.
- SE — UNDERGROUND SECONDARY DISTRIBUTION POWER LINE, DIRECT BURIED IN SCHEDULE 80 PVC C, UNO
- UNDERGROUND DIRECT BURIED SCH 40 PVC C, AS INDICATED, 600 BFG, UNO

## LIGHTING FIXTURE SCHEDULE

* SEE LIGHTING FIXTURE DETAILS ON DRAWINGS SE–2 & SE–3

| FIXTURE MARK | LINE VOLT. | TYPE | LAMPS NO. | LAMPS WATTAGE | MOUNTING | REMARKS |
|---|---|---|---|---|---|---|
| A | 240 | 230B1 | 3 | 40 | SURFACE/PENDANT | INDUSTRIAL FLUORESCENT, WITH ELECTRONIC BALLAST |
| A1 | 240 | 230A1 | 2 | 40 | SURFACE/PENDANT | INDUSTRIAL FLUORESCENT, WITH ELECTRONIC BALLAST |
| B | 240 | 232 | 2 | 40 | SURFACE/PENDANT | VAPORTIGHT FLUORESCENT |
| C | 240 | 603 | – | – | SURFACE | EMERGENCY BATTERY PACK, MTD 2.4M AFF |
| D | 240 | PH8 | 1 | 250 | PENDANT | METAL HALIDE LOW BAY INDUSTRIAL |
| E | 240 | – | 1 | 1000 | ROOF | SPOT LIGHT |
| F | 240 | XF2 | 1 | 8 | SURFACE/PENDANT | EXIT LIGHT MTD 2.2M AFF |
| G | 240 | 502B | 1 | 70 | SURFACE | HID EXTERIOR WALLL LIGHT |
| H | 240 | SF–11 | 1 | 100 | SURFACE | VAPOR PROOF PROTECTED INCANDESCENT WITH CLEAR, RED, BLUE, OR BLACK GLOBE AS INDICATED ON THE DRAWINGS |

# ABBREVIATIONS

| | |
|---|---|
| AFG | ABOVE FINISHED GRADE |
| AFF | ABOVE FINISHED FLOOR |
| AF | AMP FRAME |
| AT | AMP TRIP |
| ACCU | AIR COOLED CONDENSING UNIT |
| A | AMPERE |
| AHU | AIR HANDLING UNIT |
| AIC | AMPERE INTERRUPTING CAPACITY |
| BFG | BELOW FINISHED GRADE |
| CH | COMMUNICATIONS HANDHOLE |
| CKT | CIRCUIT |
| CM | COMMUNICATIONS MANHOLE |
| CND | CONDUCTOR(S) |
| C | CONDUIT |
| COR | CONTRACTING OFFICERS REPRESENTATIVE |
| EF | EXHAUST FAN |
| EH | ELECTRIC POWER HANDHOLE |
| EM | ELECTRIC POWER MANHOLE |
| EP | EXPLOSION PROOF |
| ELCB | EARTH LEAKAGE CIRCUIT BREAKER |
| FACP | FIRE ALARM CONTROL PANEL |
| GFI | GROUND FAULT INTERRUPTING |
| GFCI | GOVERNMENT FURNISHED CONTRACTOR INSTALLED |
| HP | HORSEPOWER |
| HPS | HIGH PRESSURE SODIUM |
| HZ | HERTZ |
| KV | KILOVOLT |
| KW | KILOWATT |
| KVA | KILOVOLT–AMPERE |
| M | METERS |
| MBB | METERING BACK BOARD |
| MDF | MAIN DISTRIBUTION FRAME |
| MEW | HOST NATION MINISTRY OF ELECTRICITY AND WATER |
| MTD | MOUNTED |
| NEC | NATIONAL ELECTRICAL CODE |
| NFPA | NATIONAL FIRE PROTECTION ASSOCIATION |
| NIC | NOT IN CONTRACT |
| PH, Ø | PHASE |
| P | POLE |
| XXX | HOST NATION ARMED FORCES |
| TEL | TEL CO. |
| RM | ROOM |
| SCH | SCHEDULE |
| SN | SOLID NEUTRAL |
| TBB | TELEPHONE TERMINAL BACKBOARD |
| TCB | TELEPHONE CONNECTION BOX (BY TEL CO) |
| TYP. | TYPICAL |
| UNO | UNLESS NOTED OTHERWISE |
| V | VOLT |
| W | WIRE |
| WP | WEATHERPROOF |
| XFMR,T | TRANSFORMER |

# GENERAL NOTES:

1. REFER TO SECTION 01015 FOR ADDITIONAL / DETAIL REQUIREMENTS.
2. ALL WIRING INSTALLATION FOR LIGHTING, POWER, AND TELECOMMUNICATIONS, SHALL BE IN APPROVED METAL CONDUIT, EITHER CONCEALED OR SURFACE MTD.
3. EXIT AND EMERGENCY LIGHTING FIXTURES SHALL BE CONNECTED TO AN UN SWITCHED POWER CIRCUIT.
4. MOUNTING HEIGHT FOR ALL PENDANT MTD LIGHT FIXTURE IS 3M AFF UNO ON THE DRAWINGS OR IN THE LIGHT FIXTURE SCH.
5. MOUNT ALL LIGHT AND FAN SWITCHES 1.2M AFF UNO.
6. MOUNT ALL RECEPTACLES 500 AFF UNO. MOUNT ALL COUNTER TOP RECEPTACLES 100 ABOVE COUNTER TOP, AND PROVIDE GFI PROTECTION.
7. ALL SPARE OR EMPTY CONDUITS SHALL HAVE A PULL STRING SECURED AT BOTH ENDS OF CONDUIT.
8. ALL ELECTRICAL SYSTEMS SHALL BE INSTALLED IN ACCORDANCE WITH THE MANUFACTURERS RECOMMENDATIONS AND THE NEC.
9. BOND LIGHTING PROTECTION GROUND SYSTEMS TO BUILDING ELECTRICAL GROUND SYSTEM PER NEC 250.16

| EQUIVALENT CONDUIT SIZE | |
|---|---|
| mm | INCHES |
| 20 | 3/4 |
| 25 | 1 |
| 32 | 1 1/4 |
| 38 | 1 1/2 |
| 50 | 2 |
| 60 | 2 1/2 |
| 80 | 3 |
| 90 | 3 1/2 |
| 100 | 4 |

| METRIC COPPER CONDUCTOR CONVERSION CHART | | |
|---|---|---|
| AWG KCMIL | COMPUTED CONVERSION mm 2 | ADVISED CROSS SECTION mm 2 |
| 16 | 1.31 | 1.5 |
| 14 | 2.08 | 2.5 |
| 12 | 3.31 | 4 |
| 10 | 5.27 | 6 |
| 8 | 8.4 | 10 |
| 6 | 13.3 | 16 |
| 4 | 21.2 | 25 |
| 3 | 26.7 | 25 |
| 2 | 33.6 | 35 |
| 1 | 42.4 | 50 |
| 1/0 | 53.4 | 50 |
| 2/0 | 67.5 | 70 |
| 3/0 | 85.0 | 95 |
| 4/0 | 107.2 | 120 |
| 250 | 126.7 | 120 |
| 300 | 152.0 | 150 |
| 350 | 177.4 | 185 |
| 400 | 202.7 | 240 |
| 500 | 253.4 | 300 |

UNLESS OTHERWISE NOTED, LINEAR DIMENSIONS SHOWN ARE IN MILLIMETERS.

| SYMBOL | DESCRIPTION | DATE | APP |
|---|---|---|---|

DESIGNED BY: MM
DATE: 4 February 2009
DWN BY: MM
SUBMITTED BY:
CHK BY: SE
FILE NO.: AF06078–EL01GN

US Army Corps of Engineers
Afghanistan Engineer District

AFGHANISTAN NATIONAL POLICE (ANP) DISTRICT HEADQUARTERS COMPOUNDS – 1 STORY HQ
VARIOUS LOCATIONS, AFGHANISTAN
STANDARD DETAILS
LEGEND & ABBREVIATIONS

SHEET REFERENCE NUMBER:
SE–1

$DATE$
$FILE$

FIXTURE MARK A

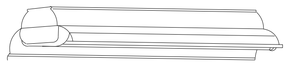

TYPE 230
SUSPENSION MOUNTED, INDUSTRIAL,
OPEN TYPE FLUORESCENT FIXTURE, 4-FOOT

| FIRST SUFFIX | SECOND-SUFFIX | DESCRIPTION |
|---|---|---|
| A | | TWO LAMPS |
| B | | THREE LAMPS |
| C | | FOUR LAMPS |
| | 1 | 8 TO 15 PERCENT UPLIGHT |
| | 2 | 18 TO 25 PERCENT UPLIGHT |

FIXTURE SHALL CONFORM TO UL1570. STANDARD BALLAST(S) SHALL BE THE CLASS P, HIGH POWER FACTOR TYPE APPROVED FOR THE APPLICATION BY THE CERTIFIED BALLAST MANUFACTURERS. CHANNEL HOUSING, END FITTINGS, AND REFLECTOR SHALL BE CONSTRUCTED WITH DIE-FORMED, COLD-ROLLED STEEL. REFLECTOR FINISH SHALL BE PORCELIAN ENAMEL, BAKED WHITE ENAMEL OR ALUMINUM OXIDE. SOCKETS SHALL BE OF THE TYPE REQUIRING A FORCED MOVEMENT ALONG THE LONGITUDINAL AXIS OF THE LAMP FOR INSERTION AND REMOVAL OF THE LAMP. FIXTURE SHALL BE PREWIRED. FLUORESCENT TUBES SHALL BE PROTECTED BY A VIRGIN ACRYLIC PROTECTIVE SLEEVE AND CLEAR PLASTIC VENTED END CAPS.

FIXTURE MARK B

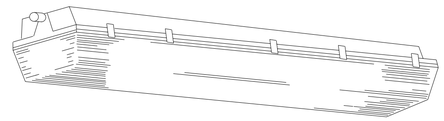

TYPE 232
4-FOOT FIXTURE LENGTH

ENCLOSED AND GASKETED, VAPOR-TIGHT FLUORESCENT FIXTURE
FOR SURFACE OR PENDANT MOUNTING

FIXTURE SHALL CONFORM TO UL1570 AND SHALL BE VAPOR-TIGHT AND SUITABLE FOR USE IN WET LOCATIONS. FIXTURE SHALL HAVE ONE-PIECE HOUSINGOF MOLDED HIGH-IMPACT PLASTIC OR REINFORCED FIBERGLASS. HOUSING BODY SHALL HAVE AN INTERNAL, DIE-FORMED, COLD-ROLLED STEEL CHANNEL WITH COVER TO PROVIDE FIXTURE RIGIDITY AND TO CONTAIN ELECTRIC COMPONENTS. THE METAL CHANNEL AND COVER SHALL RECEIVE A RUST INHIBITIVE COATING BEFORE APPLICATION OF THE FINISH COAT, WHICH SHALL CONSIST OF BAKED WHITE ENAMEL OR PORCELAIN ENAMEL. THE LENS SHALL BE ONE PIECE, OF HIGH-IMPACT-RESISTANT ACRYLIC, AND SHALL HAVE SMOOTH EXTERIOR SURFACE AND STIPPLED OR PEBBLED INTERIOR SURFACE. THE LENS SHALL BE SECURED TO THE HOUSING WITH CAPTIVE MOLDED PLASTIC OR STAINLESS STEEL SPRING LATCHES. A CONTINUOUS GASKET SHALL BE PROVIDED TO FORM A VAPOR SEAL BETWEEN THE LENS AND THE FIXTURE BODY. ALL OPENINGS IN THE HOUSING FOR MOUNTING, CONDUIT, ETC., SHALL BE CAPABLE OF FORMING A VAPOR-TIGHT SEAL. BALLAST(S) SHALL BE COLD WEATHER TYPE FOR STARTING TEMPERATURES DOWN TO MINUS 20 DEGREES F. STANDARD BALLAST(S) SHALL BE THE CLASS P, HIGH POWER FACTOR TYPE APPROVED FOR THE APPLICATION BY THE CERTIFIED BALLAST MANUFACTURERS. FIXTURE SHALL BE PREWIRED, AND PROVIDED WITH LAMPS THAT ARE PROPERLY MATED TO THE BALLAST OPERATING CHARACTERISTICS.

FIXTURE MARK E

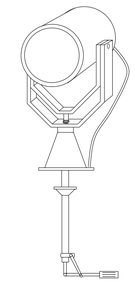

SEALED BEAM SPOTLIGHT, MOUNTED TO GUARD TOWER ROOF, WITH 1000 WATT HALOGEN NARROW SPOT PAR 56 LAMP. SPOTLIGHT SHALL BE PROVIDED WITH TWIST LEVER CONTROL, MINIMUM 10" DIAMETER LIGHT HEAD, WORKING RANGE OF 1/2 MILE, COUPLING FOR OPERATION FROM GUARD TOWER PLATFORM AND RATED FOR OUTDOOR ROUGH SERVICE WITH ANTI-SHOCK LAMPHOLDER.

FIXTURE MARK H

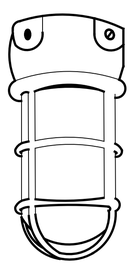

TYPE SF11

FEATURES

LAMP TYPE: INCCANDESCENT BULB: 100W
GLASS GLOBE CLEAR, BLUE, RED, AND BLACK LAMPS INDICATED ON THE DRAWINGS
PROFILE: 1 LAMP
SHIELDING: CLEAR GLASS GLOBE

OPTIONS

GLASS GLOBE: CLEAR, RED, BLUE, OR BLACK
LAMP TYPE: 75W, 100W, 150W
MOUNTING: PENDANT OR SURFACE
SHIELDING: HEAT RESISTANT

NOM. DIMENSIONS: 111mm X 251mm

GENERAL DESCRIPTION

HOUSING: 30 PERCENT GLASS FILLED THERMOPLASTIC POLYSTER
ELECTRICAL: 220 – 240 VOLT
FINISH: MOLDED IN NON-GRAYING FINISH

SURFACE MOUNTED INCANDESCENT
VAPOR TIGHT JELLY JAR WITH WIRE GUARD

NOT TO SCALE

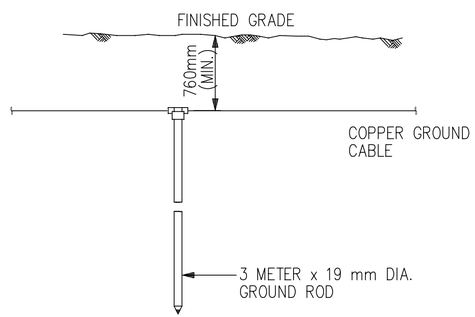


NOTES:

1. CONDUCTOR SIZE SHALL BE AS INDICATED ON PLANS.
2. EXOTHERMIC WELDS SHALL BE AS RECOMMENDED BY MANUFACTURER FOR THE SIZE OF CONNECTION AND MATERIAL INVOLVED.SEE DETAIL 5 ON SHEET SE-7.

BELOW GRADE GROUNDING ROD DETAIL

NOT TO SCALE

DETAIL 1
NOT TO SCALE

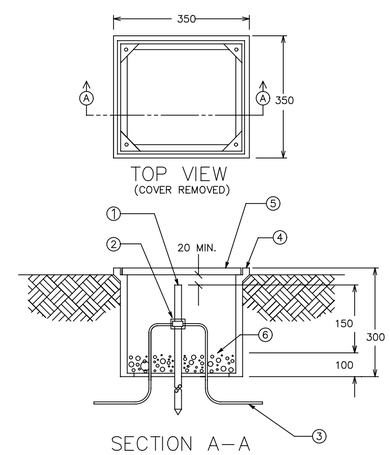


MATERIAL LIST

1. GROUND ROD
2. EXOTHERMIC WELD
3. GROUNDING CONDUCTOR 70mm² COPPER
4. POLYMER CONCRETE FIBERGLASS REINFORCED BOX
5. COVER FOR ABOVE BOX
6. GRAVEL OR CRUSHED STONE

GROUND ROD ACCESS
BOX INSTALLATION DETAIL

NOT TO SCALE

DETAIL 2
NOT TO SCALE

UNLESS OTHERWISE NOTED, LINEAR DIMENSIONS SHOWN ARE IN MILLIMETERS.

| SYMBOL | DESCRIPTION | DATE | APP |
|---|---|---|---|

DESIGNED BY: MM
DWN BY: MM
CHK BY: SE
DATE: 4 February 2009
SUBMITTED BY:
FILE NO.: AF06073-EL02DT

US Army Corps of Engineers
Afghanistan Engineer District

AFGHANISTAN NATIONAL POLICE (ANP) DISTRICT HEADQUARTERS COMPOUNDS – 1 STORY HQ
VARIOUS LOCATIONS, AFGHANISTAN
STANDARD DETAILS
STANDARD LIGHTING DETAILS

SHEET REFERENCE NUMBER:
SE-2

$DATE$
$FILE$

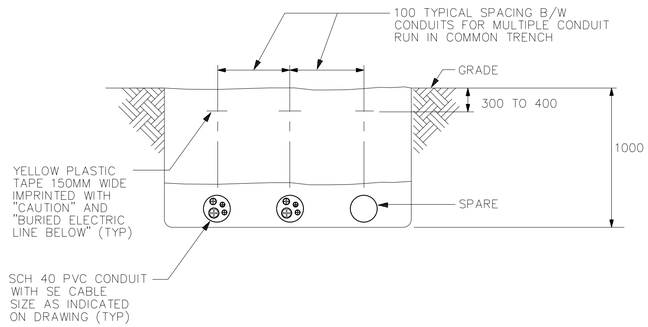


SECONDARY DISTRIBUTION CONDUIT TRENCH DETAIL

NOT TO SCALE

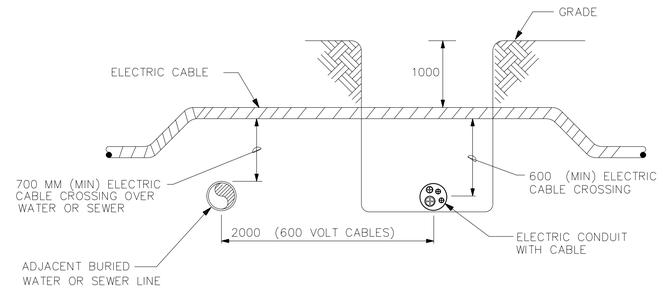


UNDERGROUND UTILITIES CROSSING DETAIL

NOT TO SCALE

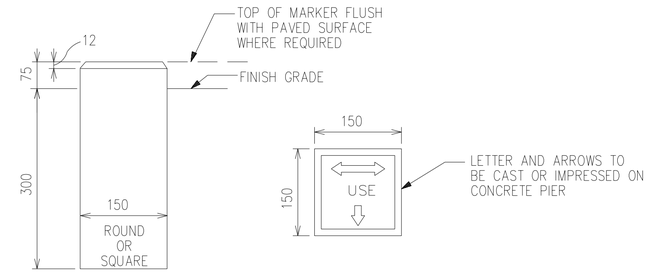


DIRECT BURIED CABLE MARKER DETAIL

NOT TO SCALE

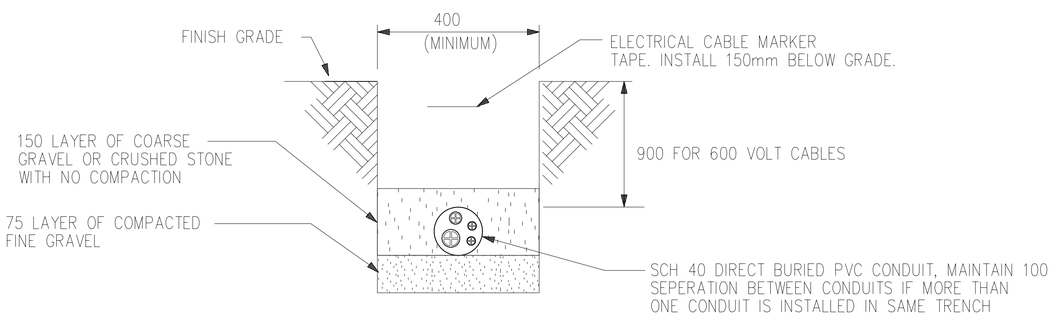


DIRECT BURIED DUCT DETAIL

NOT TO SCALE

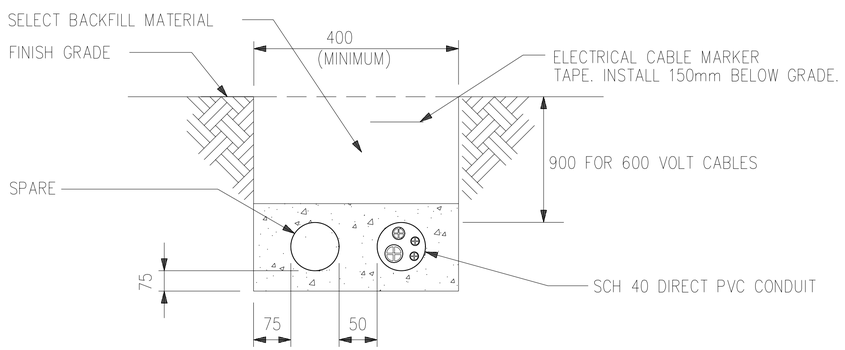


CONCRETE-ENCASED DUCT DETAIL FOR TRAFFIC AREAS

NOT TO SCALE

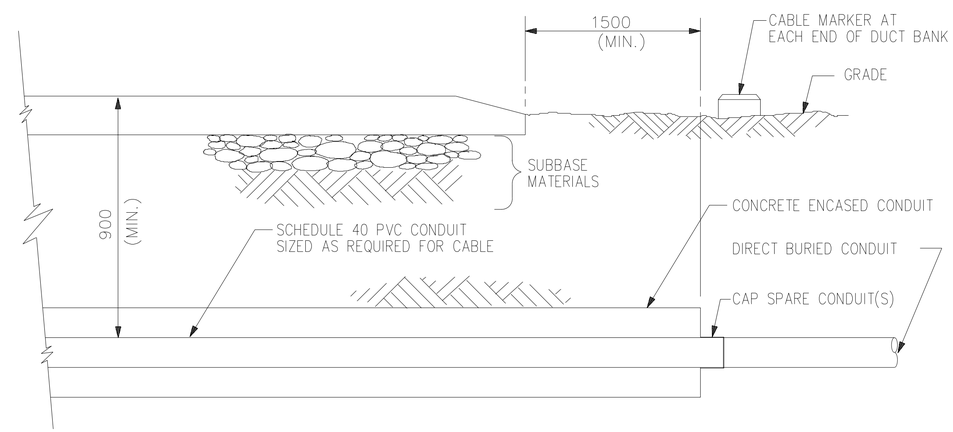


UNDER ROADWAY DUCT CROSSING DETAIL

NOT TO SCALE

UNLESS OTHERWISE NOTED, LINEAR DIMENSIONS SHOWN ARE IN MILLIMETERS.

UNLESS OTHERWISE NOTED, LINEAR DIMENSIONS SHOWN ARE IN MILLIMETERS.

| SYMBOL | DESCRIPTION | DATE | APP |
|---|---|---|---|

DESIGNED BY: MM
DATE: 4 February 2009
DWN BY: MM
SUBMITTED BY:
CHK BY: SE
FILE NO.: AF08078-EL03DT

US Army Corps of Engineers
Afghanistan Engineer District

AFGHANISTAN NATIONAL POLICE (ANP) DISTRICT HEADQUARTERS COMPOUNDS – 1 STORY HQ
VARIOUS LOCATIONS, AFGHANISTAN

STANDARD DETAILS
DUCTBANK DETAILS

SHEET REFERENCE NUMBER:
SE-3

$DATE$
$FILE$

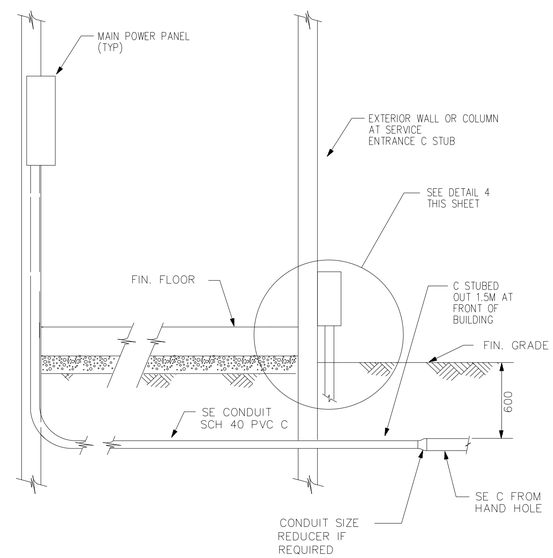


SERVICE PANEL CABLE ENTRANCE DIAGRAM

NOT TO SCALE

TELEPHONE AND DATA OUTLET DETAILS

NOT TO SCALE

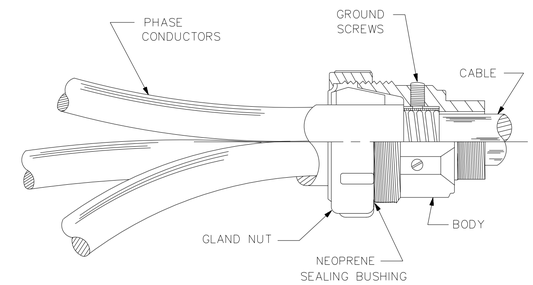


TYPICAL 600V CABLE TERMINATOR DETAIL

NOT TO SCALE

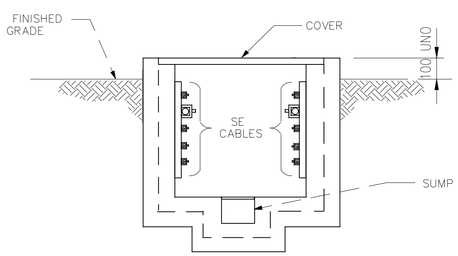


HANDHOLE CABLE INSTALLATION

NOT TO SCALE

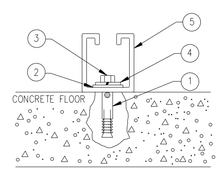


CHANNEL STRUT INSTALATION

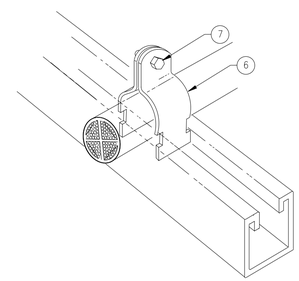


CABLE CLAMP INSTALLATION

NOT TO SCALE

| CHANNEL SYSTEM LIST OF MATERIALS | | | | | |
|---|---|---|---|---|---|
| ITEM | SML | DESCRIPTION | PART NO/NSN | UI | QTY |
| 1 | | SHIELD, EXPANSION | | | |
| 2 | | WASHER, FLAT 3/8 " ID | | | |
| 3 | | BOLT,LAG,HEX HEAD, 3/8 "-16 X 1 1/4 " | | | |
| 4 | | WASHER, LOCK 3/8 " ID | | | |
| 5 | | CHANNEL, CONT. SLOTTED 1-5/8" | | | |
| 6 | | CONDUIT / CONDUCTOR CLAMP | | | |
| 7 | | SLOTTED HEX MACHINE SCREW & SQUARE NUT | | | |

CONDUIT / CONDUCTOR CHANNEL SYSTEM INSTALLATION DETAIL

NOT TO SCALE

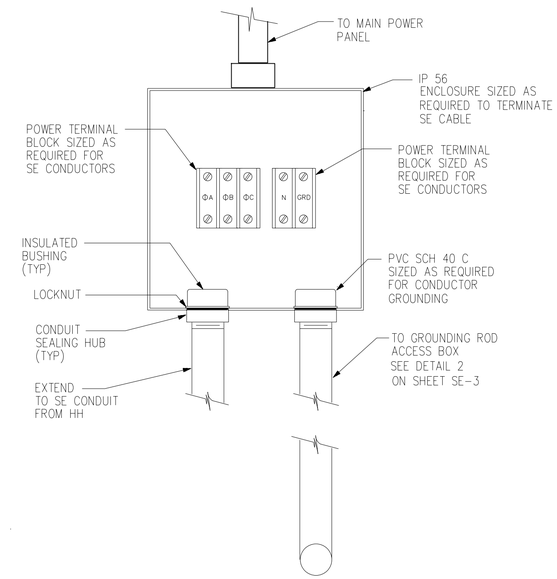


SE JUNCTION BOX

NOT TO SCALE

DETAIL 4

NOT TO SCALE

UNLESS OTHERWISE NOTED, LINEAR DIMENSIONS SHOWN ARE IN MILLIMETERS.

| SYMBOL | DESCRIPTION | DATE | APP |
|---|---|---|---|

DESIGNED BY: MM
DATE: 4 February 2009
DWN BY: MM
SUBMITTED BY:
CHK BY: SE
FILE NO.: AF06073-EL040T

US Army Corps of Engineers
Afghanistan Engineer District

AFGHANISTAN NATIONAL POLICE (ANP) DISTRICT HEADQUARTERS COMPOUNDS – 1 STORY HQ
VARIOUS LOCATIONS, AFGHANISTAN

STANDARD DETAILS
STANDARD ELECTRICAL DETAILS

SHEET REFERENCE NUMBER:
SE-4

$DATE$
$FILE$

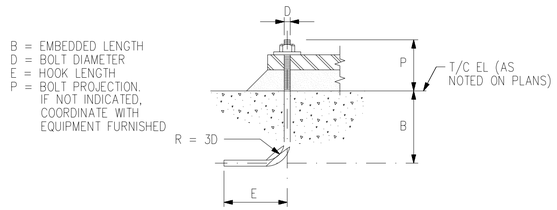


NOTE:
UNLESS OTHERWISE INDICATED, TYPE V OR VI ANCHOR RODS MAY BE USED AT THE CONTRACTOR'S OPTION

| SCHEDULE | | | |
|---|---|---|---|
| D (IN) | B (mm) | E (mm) | REMARKS |
| 3/8 " | 125 | 125 | |
| 1/2 " | 150 | 150 | |
| 5/8 " | 200 | 180 | |
| 3/4 " | 255 | 220 | |
| 7/8 " | 305 | 280 | |
| 1" | 355 | 330 | |
| | | | |
| | | | |

TYPE V ANCHOR RODS
HOOKED BOLT

| SCHEDULE | | | |
|---|---|---|---|
| D (IN) | B (mm) | E (mm) | REMARKS |
| 3/8 " | 180 | 75 | |
| 1/2 " | 230 | 75 | |
| 5/8 " | 280 | 100 | |
| 3/4 " | 355 | 125 | |
| 7/8 " | 405 | 180 | |
| 1" | 485 | 200 | |
| | | | |
| | | | |

TYPE VI ANCHOR RODS
HOOKED BOLT

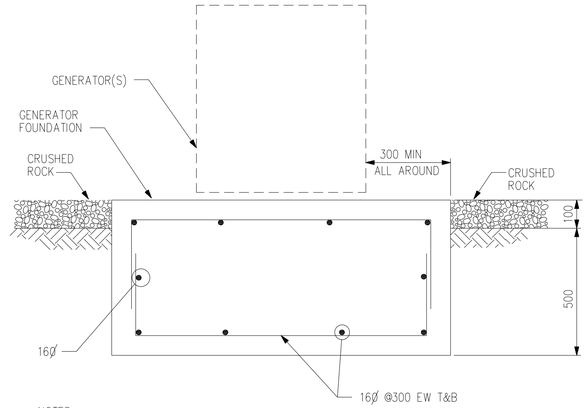


NOTES:

1. SEE DRAWING XE-1 FOR GENERATOR LOCATIONS.
2. COORDINATE PAD SIZE AND ANCHOR BOLT REQUIREMENTS WITH THE EQUIPMENT SUPPLIED.

## TYPICAL EXTERIOR GENERATOR FOUNDATION

NOT TO SCALE

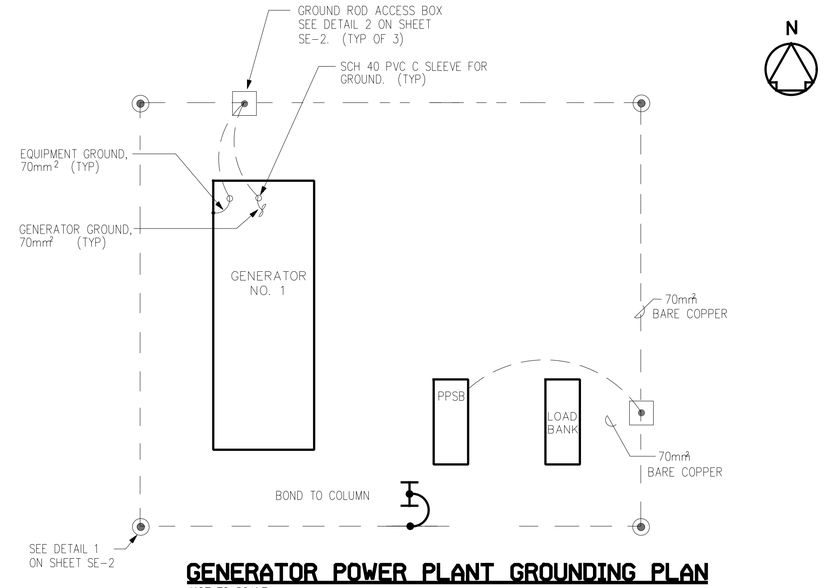


## GENERATOR POWER PLANT GROUNDING PLAN

NOT TO SCALE

NOTES:

1. GROUNDING COUNTERPOISE SHALL BE 1.5M AWAY FROM GENERATOR PAD FOUNDATION AND 0.760M BELOW FINISHED GRADE.
2. ALL GROUNDING CONNECTIONS SHALL BE EXOTHERMIC WELD CONNECTIONS,
3. A DAY TANK SHALL BE AN INTEGRAL PART OF EACH GENERATOR SET.
4. GENERATORS, DAYTANKS, PPSB AND LOAD BANK SHALL HAVE NEMA 3R OR EQUAL ENCLOSURES.

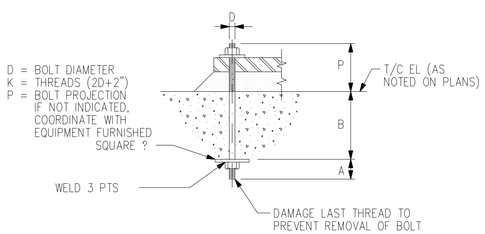


| SCHEDULE | | | | |
|---|---|---|---|---|
| D | A | B | SQUARE ? | REMARKS |
| 3/4 " | 50mm | 250mm | ?13x75x75 | |
| 7/8 " | 75mm | 300mm | ?16x90x90 | |
| 1 1/8 " | 75mm | 400mm | ?20x100x100 | |
| 1 1/4 " | 75mm | 460mm | ?20x110x110 | |

TYPE II ANCHOR RODS
UNSLEEVED BOLT

## TYPICAL ANCHOR ROD DETAILS

NOT TO SCALE

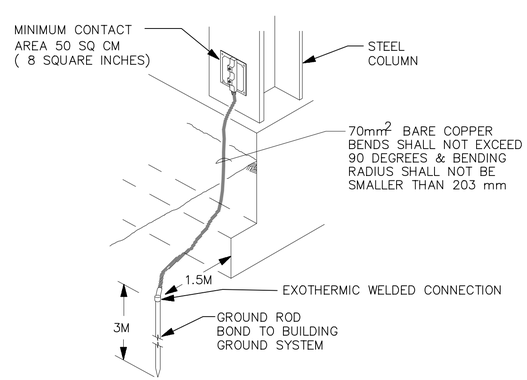


## COLUMN GROUNDING DETAIL

NOT TO SCALE

UNLESS OTHERWISE NOTED, LINEAR DIMENSIONS SHOWN ARE IN MILLIMETERS.

| SYMBOL | DESCRIPTION | DATE | APP |
|---|---|---|---|

DESIGNED BY: MM
DATE: 4 February 2009
DWN BY: JJK
SUBMITTED BY:
CHK BY: JJK
FILE NO.: AF06074-EL05DT

US Army Corps of Engineers
Afghanistan Engineer District

AFGHANISTAN NATIONAL POLICE (ANP) DISTRICT HEADQUARTERS COMPOUNDS – 1 STORY HQ
VARIOUS LOCATIONS, AFGHANISTAN
STANDARD DETAILS
POWER PLANT DETAILS

SHEET REFERENCE NUMBER:
SE-5

$DATE$
$FILE$

| CONSTRUCTION REQUIREMENTS | | | | |
|---|---|---|---|---|
| CLEAR MINIMUM INSIDE REQUIREMENTS FOR INSTALLATION AND MAINTENANCE PURPOSES | | | | |
| TYPE | HEIGHT | LENGTH | WIDTH | SUMP DEPTH |
| HH | 1.2M | 1.2M | 1.2M | 0.3M |

| MINIMUM CONCRETE THICKNESS | |
|---|---|
| HANDHOLE WALLS TOP, AND FLOORS | SUMP WALLS AND FLOOR |
| 150mm | 100mm |

MINIMUM REINFORCING

1. BARS WILL BE A MINIMUM OF 130 ROUND DEFORMED.
2. WALLS AND FLOOR WILL HAVE BARS AT 200mm MAXIMUM ON CENTERS WITH A MINIMUM 300mm HOOK AT CORNERS AND INTERSECTIONS.
3. THE TOP SHALL HAVE BARS INSTALLED AS SHOWN AT A MINIMUM OF 50mm FROM THE OPENING AND WITH A MINIMUM 100mm SPACING BETWEEN BARS.

NOTE: REINFORCING SHALL BE INCREASED WHERE REQUIRED TO SUIT ACTUAL INSTALLATION. MINIMUM REQUIREMENTS ARE FOR A H20 WHEEL LOADING (ASSHTO).

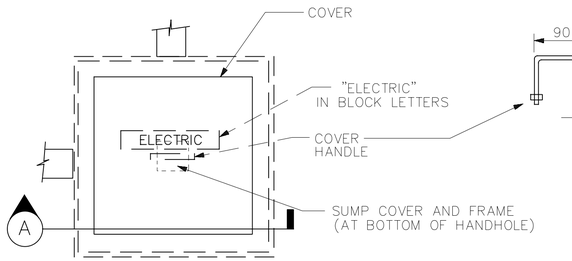


HANDHOLE COVER DETAIL
NOT TO SCALE

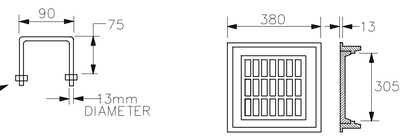


SUMP FRAME AND COVER DETAIL
NOT TO SCALE

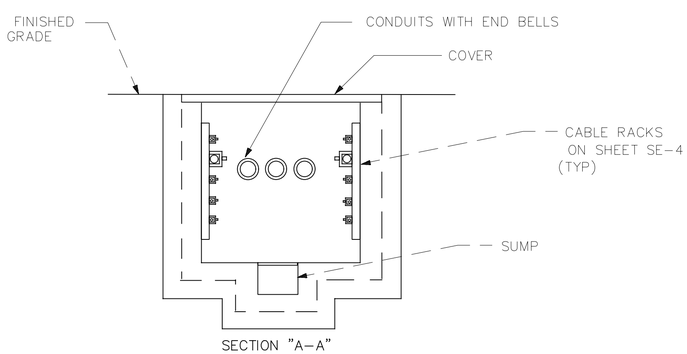


HANDHOLE DETAIL
NOT TO SCALE

UNLESS OTHERWISE NOTED, LINEAR DIMENSIONS SHOWN ARE IN MILLIMETERS.

| SYMBOL | DESCRIPTION | DATE | APP |
|---|---|---|---|

DESIGNED BY: MM
DATE: 4 February 2009
DWN BY: MM
SUBMITTED BY:
CHK BY: SE
FILE NO.: AF08073-EL060T

US Army Corps of Engineers
Afghanistan Engineer District

AFGHANISTAN NATIONAL POLICE (ANP) DISTRICT HEADQUARTERS COMPOUNDS – 1 STORY HQ
VARIOUS LOCATIONS, AFGHANISTAN

STANDARD DETAILS
HANDHOLE DETAILS

SHEET REFERENCE NUMBER:
SE–6

$DATE$
$FILE$

COMBINED SECURITY TRANSITION FORCES – CSTC-A

MACTEC ENGINEERING AND CONSULTING, INC.

# SITE ASSESSMENT SURVEY

**May 2009**

## UNIFORM POLICE DISTRICT HEADQUARTERS @ LASHKARGAH, HELMAND, PROVINCE

## PROJECT # PDHS020501DH

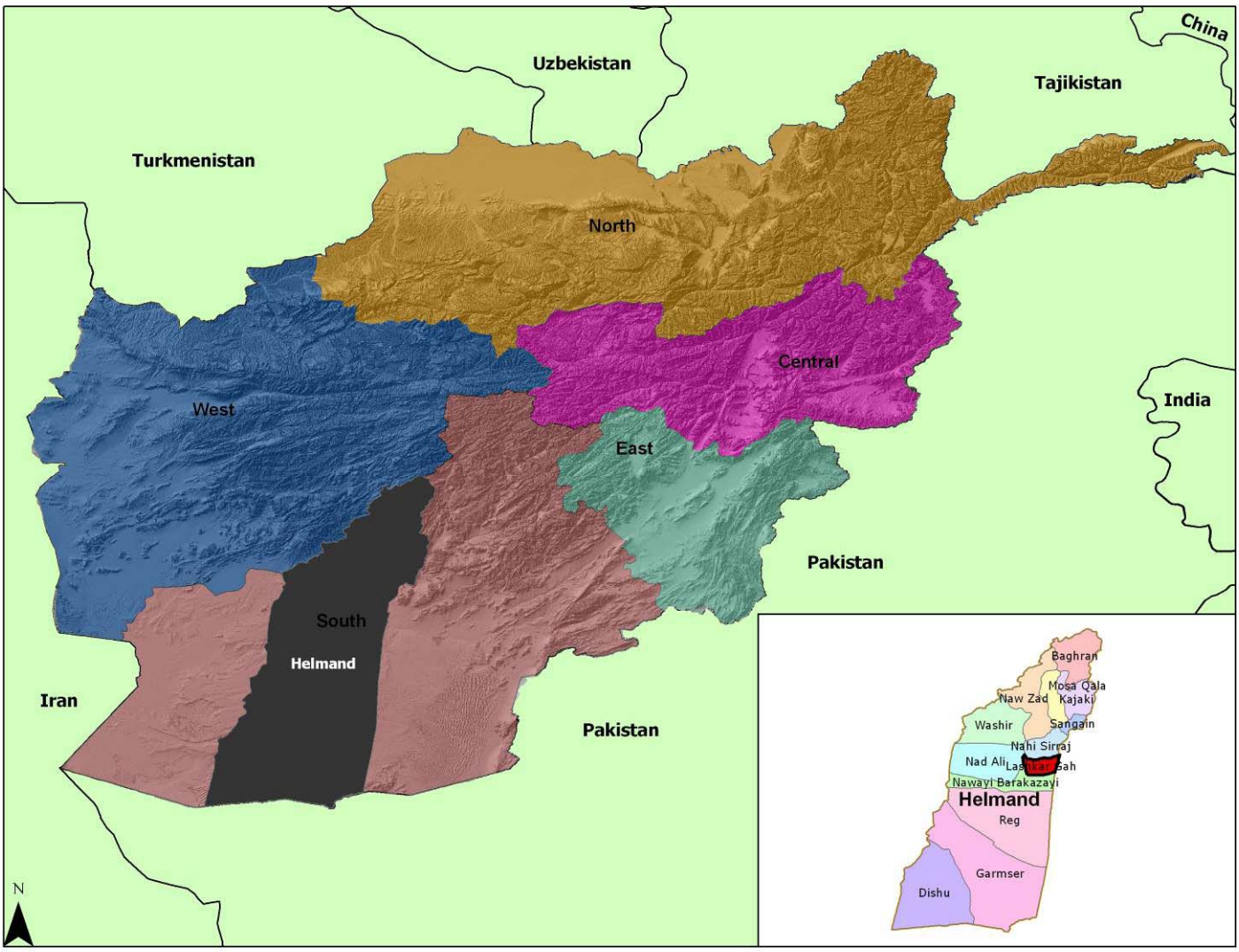

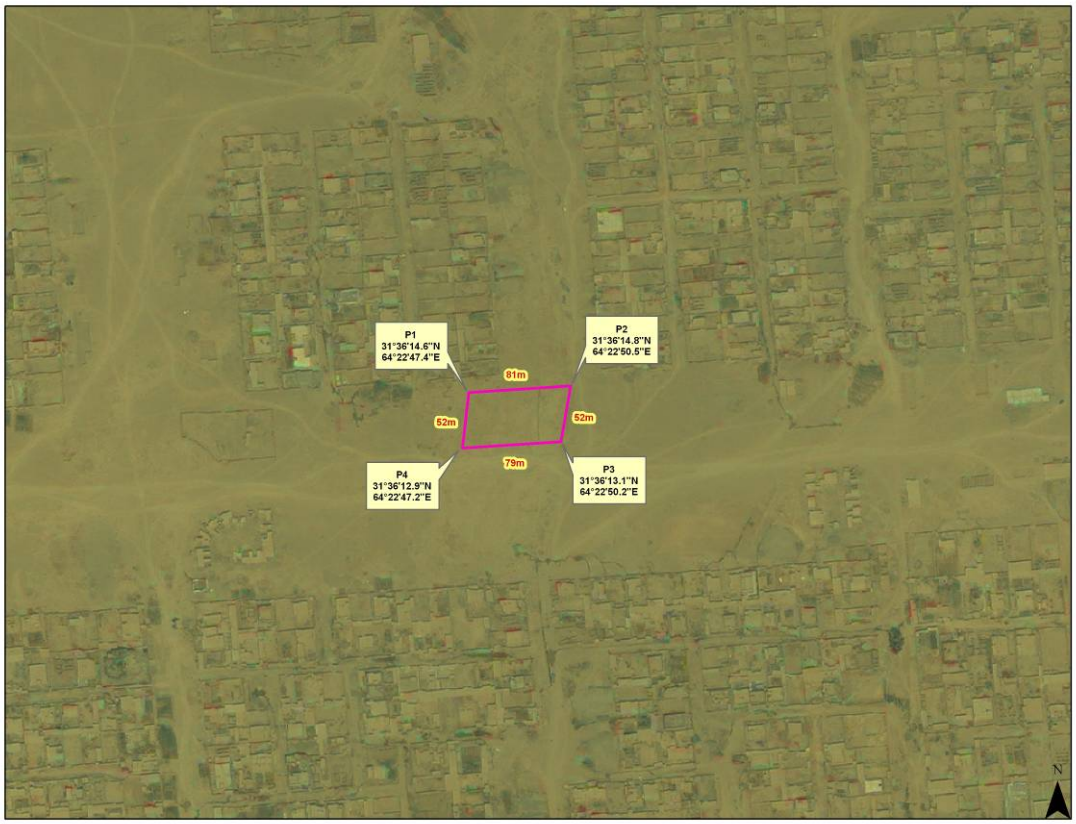
P1
31°36'14.6"N
64°22'47.4"E
P2
31°36'14.8"N
64°22'50.5"E
P3
31°36'13.1"N
64°22'50.2"E
P4
31°36'12.9"N
64°22'47.2"E
81m
52m
52m
79m
N

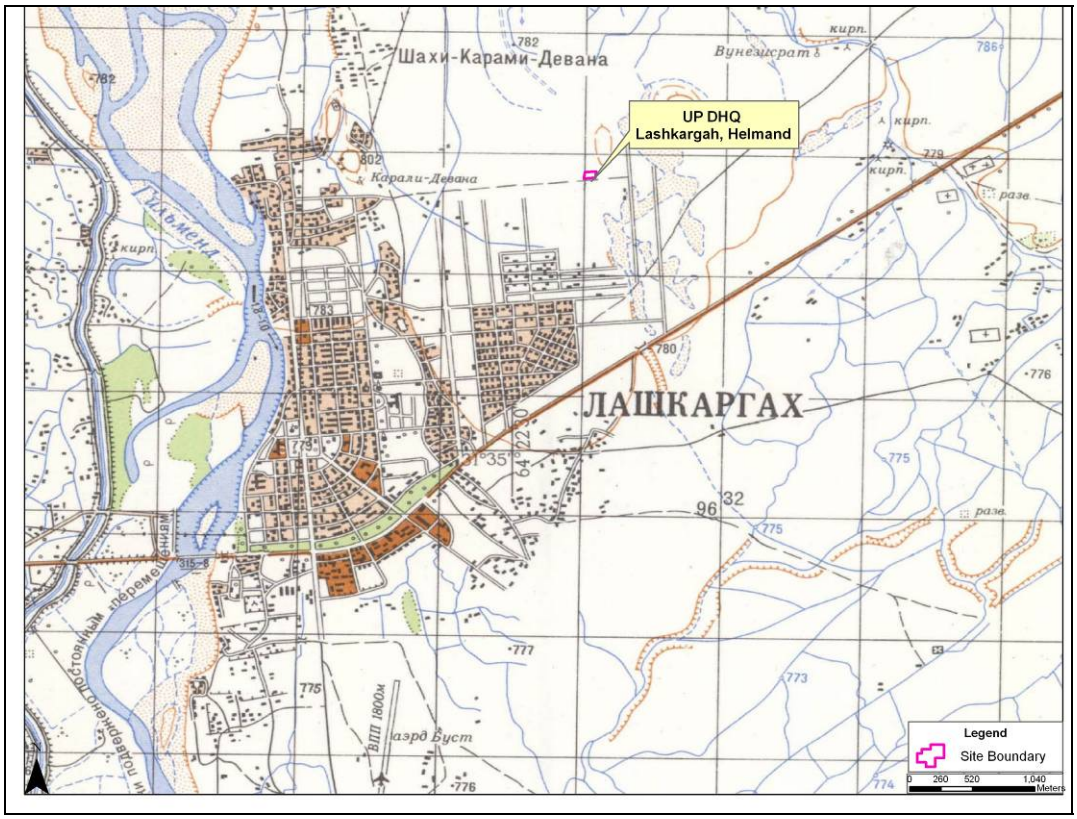
UP DHQ
Lashkargah, Helmand
Шахи-Карами-Девана
Вунезшсрат
Карали-Девана
Гильмена
ЛАШКАРГАХ
Legend
Site Boundary
0 260 520 1,040
Meters

# SITE ASSESSMENT

The findings of the site assessment survey indicate the property **meets** the general requirements of the proposed facility based on:

- Ownership: Property solely held by the Government of Afghanistan (GoA)
- Surrounding land use: To the north of the proposed site is an area for a planned 12m road, then residential houses. To the south is open government land, then at 50meters is another residential neighborhood. To the east is a road (12m dirt), then a residential neighborhood. To the west is open government land.
- Existing structures: The proposed site is void of existing structures.
- Security: The site is without force protection improvements. It is located within close proximity of residential neighborhoods, with established alleys and streets.
- Power: The site has no electrical supply available; it was mentioned there is sporadic city power, with better city power forthcoming as the British forces are working on improving/replacing the turbines at an existing hydropower plant (165km) in a neighboring District.
- Water: Water is available at 30 meters depth, but most local wells are 80meters depth (more constant supply).
- Waste Water: There are no septic facilities onsite.
- Constructability: Property is level and clear of obstructions; as well, the site is located in a main section of Lashkargah close to markets.
- Drainage: No significant drainage issues.
- Road access: Site is located within 1km of a paved street to the main part of Lashkargah city.
- Landmines / UXO: No indication of UXO hazards
- Area resources: Some construction materials (sand, gravel, rock, crushed stone, and diesel fuel) available from surrounding area (5-10km). Other materials (brick, steel bars, cement, and machinery) can be mobilized from surrounding districts (100km-150km).

This site assessment did not include non scope items such as subsurface investigation and civil surveying.

This Site Assessment Survey Report was produced under the direction of the Project Manager and reviewed by the Project Principal.

Daniel W. Kraft
MACTEC Project Manager

Michael W. Midkiff
MACTEC Project Principal

**LIMITATIONS**

The findings and opinions presented are relative to the dates of our site work and should not be relied on to represent conditions at substantially later dates.

The opinions included herein are based on information obtained during the study and on MACTEC's experience. If additional information becomes available that might impact our conclusions, we request the opportunity to review the information, reassess the potential impacts, and modify the report, if warranted. If this assessment included a review of documents prepared by others, MACTEC has no responsibility for the accuracy of information contained therein.

# TABLE OF CONTENTS

1 Site Assessement ..... 1
1.1 Uniform Police District HQ @ Lashkargah, Helmand Province ..... 1
1.1.1 Introduction ..... 1
1.1.2 Existing Conditions ..... 1
Figure 1 - Aerial Site Photo ..... 4
Figure 2 - Site Delineation Coordinates ..... 5
Figure 3 - Land Use of Surrounding Area ..... 6
Figure 4 - Construction Resources ..... 7
1.1.3 Conceptual Master Plan/Site Plan ..... 8
Figure 5 – Master Plan Map ..... 8

## LIST OF APPENDICES

**APPENDIX A** Site Photograph Direction and Photographs
**APPENDIX B** Site-Specific Official GoA Documents (Pashtu and English)
**APPENDIX C** Field Reports (Pashtu and English)
**APPENDIX D** Additional Site Photographs

SHEET INTENTIONALLY LEFT BLANK

# 1 SITE ASSESSEMENT

## 1.1 UNIFORM POLICE DISTRICT HQ @ LASHKARGAH, HELMAND PROVINCE

### 1.1.1 INTRODUCTION

MACTEC Engineering and Consulting, Inc. (MACTEC) conducted a site assessment survey on 10 May 2009 of a 0.400-hectare (4,000 m²) parcel of master planned land specified for the Ministry of Interior (MoI), Afghan National Police, Uniform Police District HQ @ Lashkargah, Helmand Province.

### 1.1.2 EXISTING CONDITIONS

The proposed site is located in Lashkargah city, the capital city of Helmand Province, 650km southwest of Kabul city, at an average elevation of 792 meters. Currently, there are no known claims or disputes to the proposed MoI government land. The 4,000 m² or 0.400- hectare parcel is located on a flat, open plot. The site is approximately 55mx75m. The surrounding land is as follows:

North: Planned road, residential houses & government land planned for a park.

South: Open government land, then after 50meters, residential houses.

East: Road and residential houses

West: Open government land

SHEET INTENTIONALLY LEFT BLANK

# FIGURES

# UNIFORM POLICE DISTRICT HQ @ LASHKARGAH, HELMAND PROVINCE

Figure 1 - **Aerial Site Photo**

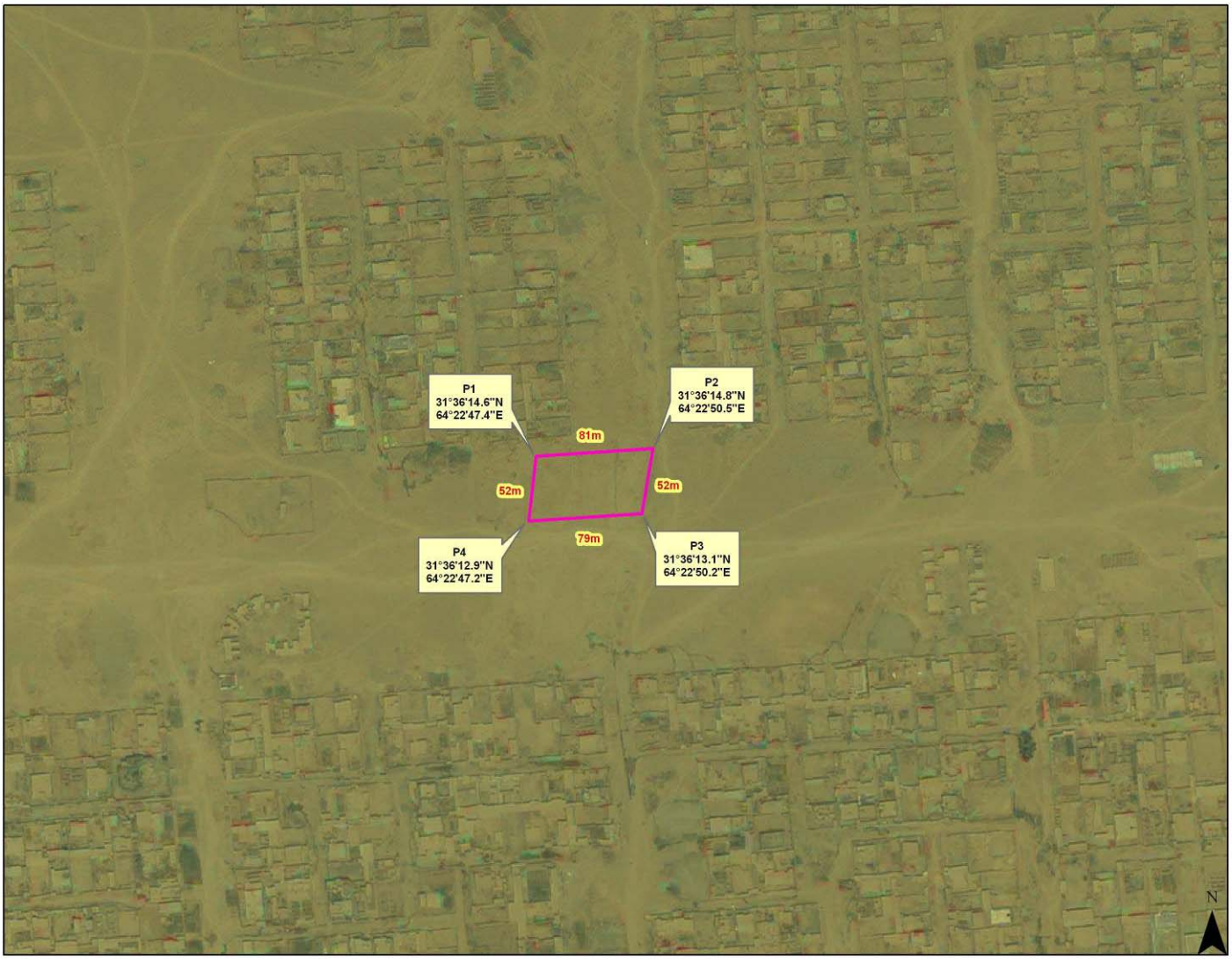

Figure 2 - **Site Delineation Coordinates**

Table 1-1**:** **Site Delineation Coordinates**

| Site Description | Site Location | Corner Point | Longitude | Latitude | Elevation (m) |
|---|---|---|---|---|---|
| Uniform Police District HQ @ Lashkargah, Helmand | Lashkargah city, Helmand Province, Afghanistan | 1 | 31º 36' 14.6" N | 64º 22' 47.4" E | 791 |
| | | 2 | 31º 36' 14.8" N | 64º 22' 50.5" E | 793 |
| | | 3 | 31º 36' 13.1" N | 64º 22' 50.2" E | 792 |
| | | 4 | 31º 36' 12.9" N | 64º 22' 47.2" E | 792 |

Figure 3 - **Land Use of Surrounding Area**

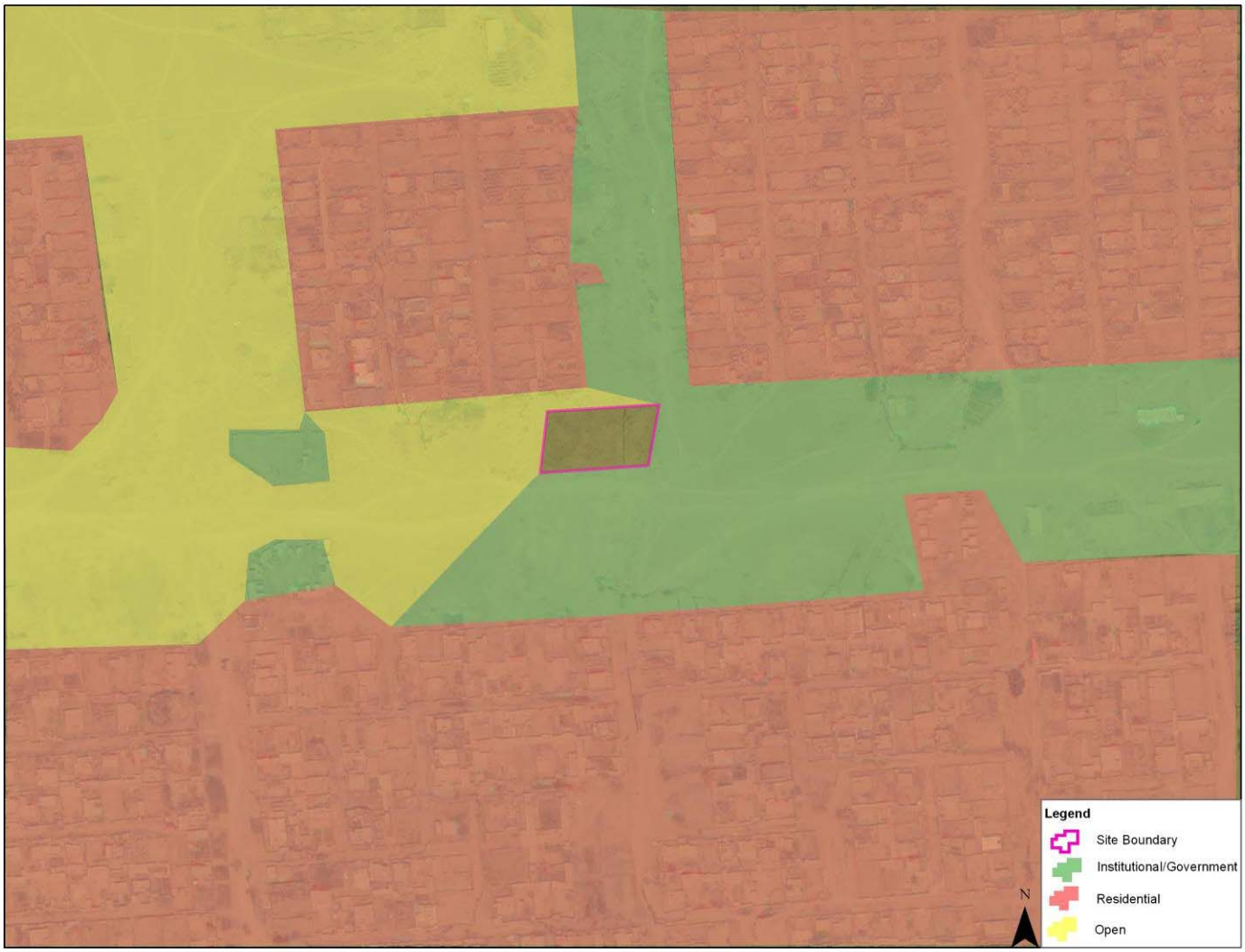

Figure 4 **- Construction Resources**

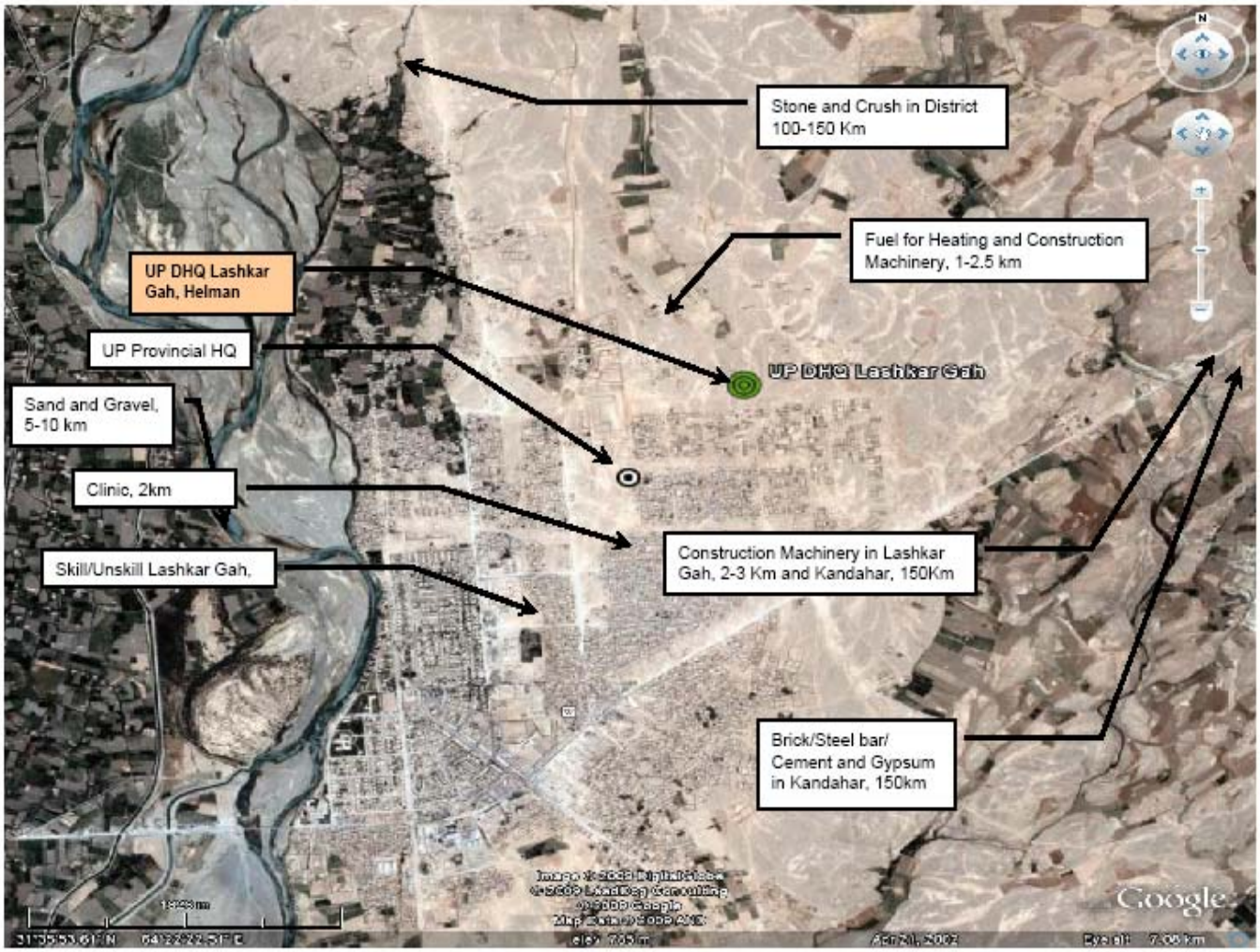

# APPENDIX A
# SITE PHOTOGRAPH DIRECTION AND PHOTOGRAPHS

# Lashkar Gah UP District site sketch

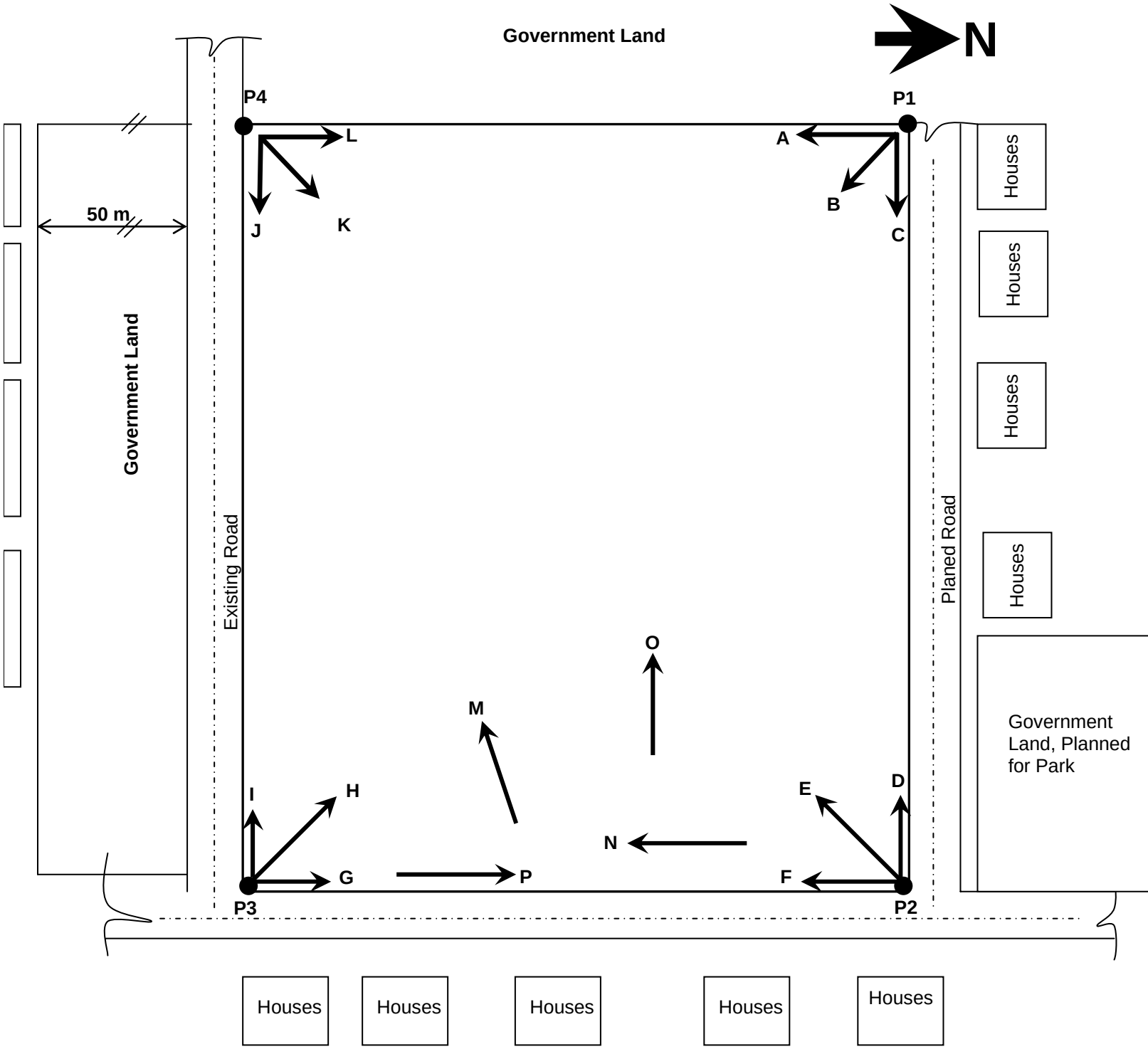

**SITE CORNER POINT LOCATIONS (GPS Coordinates)**

**Site Corner Point #1-** Elev. 791m; 31º 36' 14.6" North, 64º 22´ 47.4" East

A - to South

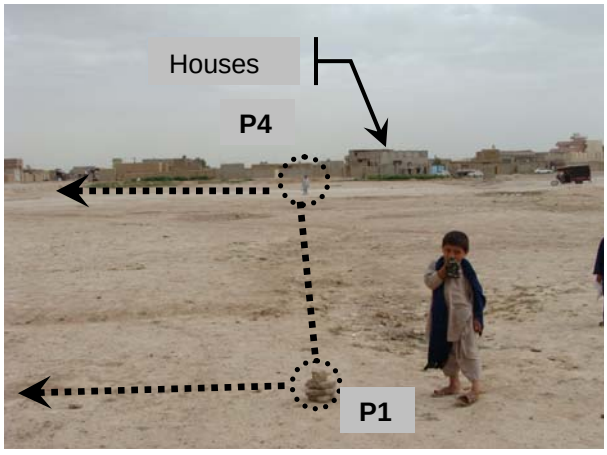


B – to Southeast

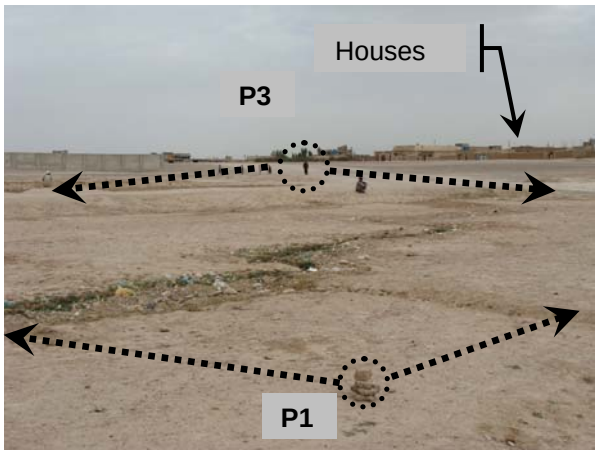


C – to East

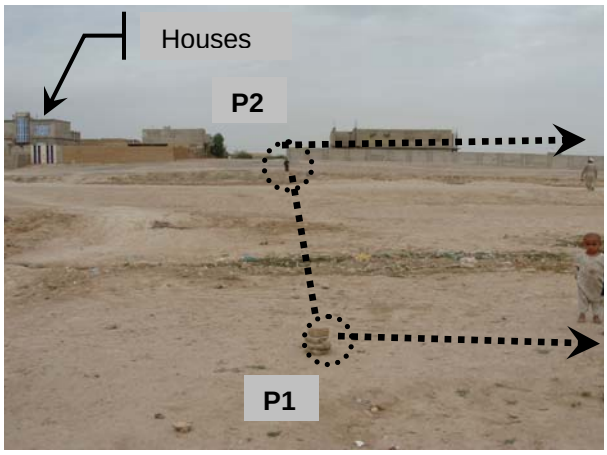

**Site Corner Point #2-** Elev. 793m; 31º 36’ 14.8” North, 64º 22´ 50.5” East

D – to West

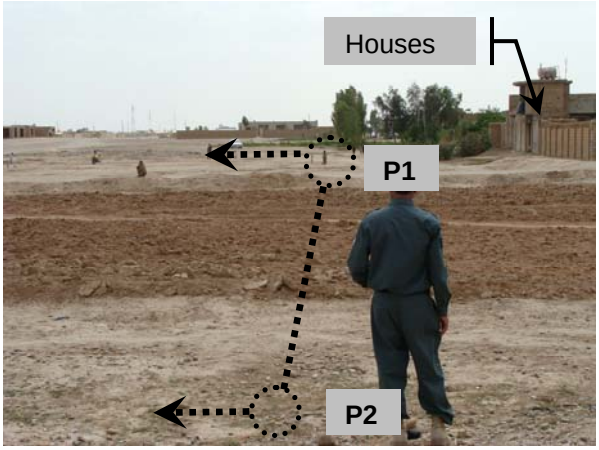


E – to Southwest

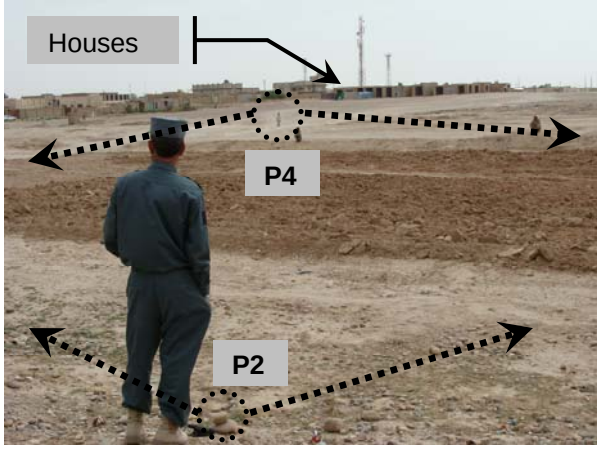


F - to South

**Site Corner Point #3- Elev**. 792m; 31º 36' 13.1" North, 64º 22´ 50.2" East

G - to North

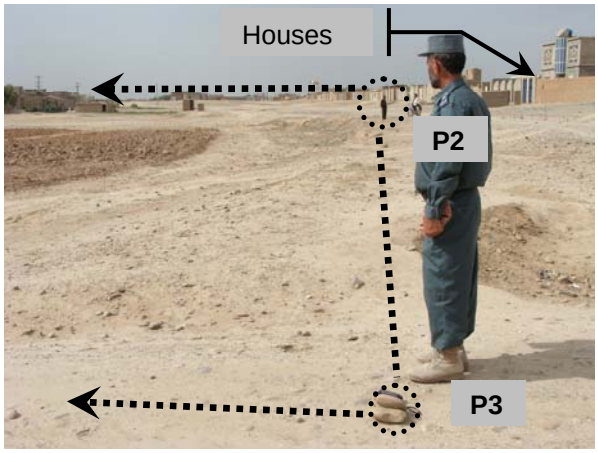


H - to Northwest

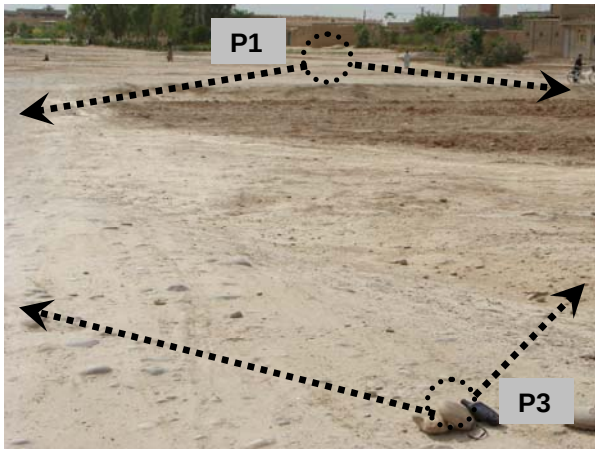


I- to West

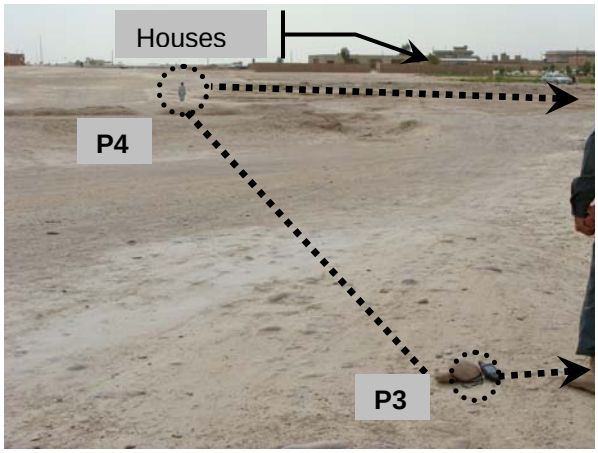

**Site Corner Point #4-** Elev. 792m; 31º 36' 12.9" North, 64º 22´ 47.2" East

J - to East

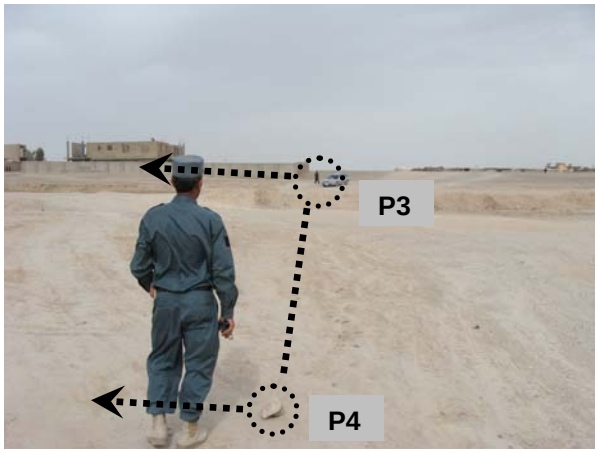


K - to Northeast

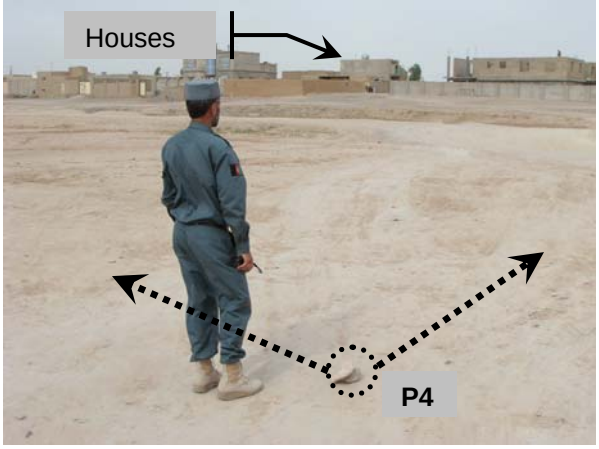


L- to North

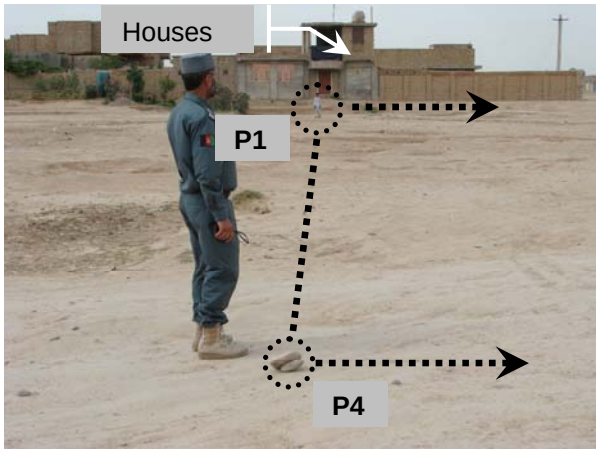

# APPENDIX B
# SITE-SPECIFIC OFFICIAL GoA DOCUMENTS
# (PASHTU and ENGLISH)

۶۴۵ ـ ۱۳۸۹/۲/۱۶

وزارت امور داخله دولت اسلامی افغانستان
معینیت امور اداری و تامینات
ریاست تسهیلات
امریت دفتر

**بقومندانی محترم امنیه ولایت ( هلمند ) !**

وزارت امور داخله در نظر دارد تا برای پروژه های پولیس طبق فرمان نمبر(16) موءرخ 1387/2/6رءیس جمهوری اسلامی افغانستان زمین را تثبیت نماید, در این باره **انجنیر** امین الله خان نماینده مکتک (کمپنی تسهیل کننده) که ترتیب ماسترپلان پروژه های پولیس رابه عهده داردبه شما معرفی گردید تا زمین برای پروژه های ذیل:

1- پروژه پولیس یکی ازحوزه های امنیتی شهرلشکرگاه به اندازه(12) جریب زمین راتعین وتثبیت نماید. بدینوسیله موضوع بشما نگاشته شد تا غرض تعین و تثبیت زمین همرای آن همکاری لازم نموده وتسهیلات لازم کاری رافراهم سازید تا موصوف توانسته باشد که معلومات لازم رادر زمان تعین شده در دسترس خویش داشته باشد.

با احترام
وزیر امور داخله

**Letter No: 665**

**Date: 16/2/1388**

**Islamic Republic of Afghanistan's Interior Ministry**

**Facility and Administrative Deputy Ministerial**

**Facility Department**

**Office Manager**

**To the Respected Police Headquarters of Helmand Province:**

Interior Ministry plans to specify land for Police Projects based on decree No (16) Date: 6/2/1387 by Islamic Republic of Afghanistan's President, regarding the issue Engineer Aminullah MACTEC's representative (the facilitating company) has been introduced to you, in order to determine land for following Project:

1. Police Project, one of the local police stations in Lashkargah (12 Jeribs)

Through this, it is brought in to your consideration that in order to determine the land, your assistance is required with the mentioned gentleman, and provide him the required facilities, so he can collect the required information on time.

Sincerely,

Interior Minister

(Signed)

فرماندار زنجیره ولایت هلمند

مدیریت ع اداری و ت،

مدیریت پیشینه

آمریت پلان و حمایه

۵۳

۸۳

۱۳۸۸/۳/۳۱

به معینیت محترم امور اداری و تامینات وزارت امور داخله !-

قابل توجه ریاست محترم تشهیلات.

بحوالهٔ مکتوب عدد ۶۶۵ تاریخ ۱۳۸۸/۳/۱۶ تان احتراماً میگردد.

محترم رنجبر امین الله خان نماینده کمیتهٔ تشهیل تشکل که جهت ترتیب ماشین پلان پروژه های پولیس معرفی شده بود موصوف زمین ماموریت اول مرکز، زمین مدیریت اطفائیه زمین ماموریت نمبر ۲ مرکز فرماندهی سروی ۳ بوده از همکاری و کارکردگی وی شما پیش گذارم لهذا از انجام وظیفه در نتیجه مکتوب جهاز وارش به انتقام محترم معرفی و اعزام گردید. با احترام

(المحقق محمد نواز اسد دستگیرزاد)

فرماندار زنجیره ولایت هلمند

**Police Headquarters of Helmand Province**

**General Administrative and Sustaining Directorate**

**Information Directorate**

**Planning & Statistics Section**

**Letter No: 53/14** **Date: 21/2/1388**

**To the Respected Facility and Administrative Deputy Ministerial of MoI:**

**To the Attention of Facility Department:**

In response to your letter No: 665 Date: 16/2/1388 we write as following:

Respected Eng. Aminullah Khan the facilitating company's representative was introduced to us in order to prepare the master plan for Police Projects. The mentioned gentleman surveyed land for 1st Central UP District HQ, Fire Department, and 2nd Regional UP Headquarters. We are very pleased for his good cooperation and work, after completion of his job through this letter we introduce him back to the respected position.

Sincerely,

Alhaj Lieutenant Colonel Asadullah Sheerzad

Helmand Chief of Police

(Signed)

# APPENDIX C
# FIELD REPORTS (PASHTU and ENGLISH)

د ملی پولیس د ساحاتو تشخیصول
دا فورمه باید مخکی د ساحی له پریښودو څخه ډکه شی

د ساحی نوم: د لشکرگاه د دوم سمت ماموریت

امنیتی وضع: | ښه | نورمال | خراب |

د سروی نیټه: 10/05/09

لوروالی:( 792m ) په متر په حساب

د انجینر نوم: امین الله د عظیمی

معلومات د خمکی د مالکیت په اړه:
دولتی ځمکه ده

د کابل څخه ( جنوب غرب ) لوری , واټن 650Km

د ولایت څخه د مرکز( شمال شرق) لوری واټن 2-3Km

د ساحی عمومی وضع:

د خمکی د اوسنی پیشنهاد حالت:
نومونی ساحه یوه هواره اوسط طول شکله ساحه ده چه شمال لوری ته 12m سړک یو آیزه پرون کبی لری او بهرا د هایشی کوروندی جنوب طرف ته یی چه دولتی ځمکه ده چه د نورو دیاستونو لپاره انتخاب شوی ده شرق طرف ته هم سړک او بهرا د هایشی کوروندی غرب طرف ته یی د هایشی کوروند او یو نورزه دولتی ځمکه ده

د تثبیت شوی خمکی د کنجونو خای د کوردینا ت (جی پی اس ) په حساب:

اول: گوټ
El: 791m N:31°36'14.6" E:064°22'47.4"
تصویر Ph:A·B·C

دوم: گوټ
El: 793m N:31°36'14.8" E:064°22'50.5"
تصویر Ph:D·E·F

دریم: گوټ
El: 792m N:31°36'13.1" E:064°22'50.2"
تصویر Ph:G·H·I

څلورم: گوټ
El: 792m N:31°36'12.9" E:064°22'47.2"
تصویر Ph:J·K·L

پنځم: گوټ
تصویر

شپږم: گوټ
تصویر

اوم: گوټ
تصویر

اتم
تصویر

نهم: گوټ
تصویر

لسم: گوټ
تصویر

د شته تسهیلاتو څرنگوالی !

د ثبیت شویو ودانیو د کنجونو د کوردینا ت (جی پی اس ) په حساب:

د (1) ودانی:

1

اول: ګوټ _____ دوم: ګوټ _____

تصویر ☐ تصویر ☐

دریم: ګوټ _____ څلورم: ګوټ _____

تصویر ☐ تصویر ☐

د (2) ودانی:

اول: ګوټ _____ دویم: ګوټ _____

تصویر ☐ تصویر ☐

دریم: ګوټ _____ څلورم: ګوټ _____

تصویر ☐ تصویر ☐

د (3) ودانی:

اول: ګوټ _____ دوم: ګوټ _____

تصویر ☐ تصویر ☐

دریم: ګوټ _____ څلورم: ګوټ _____

تصویر ☐ تصویر ☐

د ودانی اندازه او د منازلو تعدادونه:

اوله ودانی: ته ساحه کښی هیڅ نوع ودانی نشته

دومه ودانی: ته ساحه کښی ودانی نشته

دریمه ودانی: ته ساحه کښی ودانی نشته

د ودانی دولوته(مواد ساختمانی شیوه او عمومی اوضاع):

اوله ودانی ته ساحه کښی ودانی نشته

دویمه ودانی: نشته

2

دریمه ودانی:

تر سامه کښې ودانۍ نشته

په ساحه کې د کار لویدلی مواد او کثافات:

تر ساحه کښې هیڅ نوع د کار لویدلی مواد او کثافات نشته
البته ساحه ډیره کې هوار کاڼي ته ځورتاوه.

د ساحې په چاپیریال کې:

د ساحې چاپیریال هم د کثافاتو څخه پاک دی.

ایا ساحه د پراختیا وړ تیاره ده که نه؟ ☐ په کوم لوری؟

ساحه د پراختیا وړ تیاره ده ځکه چې د ښار او ښار څخه لرې
ته یې د سړکونو لرې دی او غرب ته یې ښکلی ګرد هوا
او د اوږدې اندازه د ولسي ځمکه ده او جنوب لوري ته یې هم د ولسي ځمکه ده چې د ولسي
ځمکه کښې نوی او ریاستونه جوړیږي او د ورته انتخاب شوي دي.

ټولګټې تسهیلات:

د پرېښنا سیستم:

A) ښاري بریښنا په کومه کچه, ظرفیت او فریکونسي شته!

پر نوموړي ساحه کښې نه ښاري بریښنا سټ او نه کوم جنراتور
ځکه چې ډیره ساحه کښې کوم ساختمان نشته.

B) اوبه: د نوموړي ساحې څخه کوهیانو څخه استفاده کوي د اوبو سطح په متر 30-80m

استوګن کسان له څه ډول اوبو څخه استفاده کوي؟

استوګن کسان هم د کوهیانو د اوبو څخه استفاده کوي.

3

C) د فاضله اوبو سیستم:

په ساحه کښې هیڅ ډول د فاضله اوبو سیستم نشته
مګر په هلته کوم ساختمان وجود نه لري.

د ساحه ساختمان

د نقلیه وسایطو لاسرسی سرک ته

| کارلائدی | خراب | خامه | قیرشوی |
|---|---|---|---|
| | | ✓ | |

څه ډول ستونزې د ژمی په موسم که وی

د ژمی په موسم کښې په خاص ډول کومې ستونزې نه لیدل کیږي
مګر کله چې باران وشي سرک ختمې کیږي.

توپوګرافی

مهربانی وکړی مهم تغیرات په ځمکه وښوی

A) د محلی ټپوګودینات

په ساحه کښې محلي ټپي وجود نه لري

B) د خندقونو کوردینات

په ساحه کښې خندق وجود نه لري.

C) د وادی کوردینات

په ساحه کښې وادی وجود نه لري.

D) د سیلاب د کانترول لاره

پدې ساحه کښې کرچیرته ساختمان جوړ شي
د سیلاب له اړخه نه متاثره کیږي.

E) د ساحې ایزولیشن

کومه ساحې سیندونو او غرونو ته نژدې دی؟ ایا دغه ساحې په نوموړو احاطه شویده؟

نوموړی ساحه په غرونو او سیندونو کوم سیمه احاطه شوی نده

F) د ساحې د پاکولو په اړه معلومات

نوموړی ساحه هموار او پاکه ساحه ده

4

د ماینونو د پاکولو په باره که معلومات

سام د ماینونو د خطر څخه پاکه ده .

نور معلومات چې پرودانې منفی اغیزه لری؟

کومه خاصه ستونزه نه لیدل کیږی چې پرودانی منفی اغیزه وکړی .

محلی منابع:

1) کم تجربه کارمندان د لنګر ګاه په ښار کښې ډیر زیاته اندازه پیدا کیږی ورځنی اجوره: 250-300AF

2) با تجربه کارمندان د لنګر ګاه په ښار کښې ډیر زیاته اندازه پیدا کیږی ورځنی اجوره: 500-600AF

3) ساختمان مواد لکه (شګه, چغل, ډبره) په ساحه که: ✓ شته ☐ نشته
لوری او بیه جنوب طرف ته 5-10Km فاصله مګر ټیکه نه پیدا کیږی یو وسواله کښې شته 100-150Km فاصله

4) نور مواد لکه (سیمنت, ګول سیخ, خښته, ګچ, سریښ) له کم خای څخه راوړل شی.
سیمنت سیخ ګول کچ سریښ له قندهار نه راوړل کیږی
لوری او بیه شرق

5) د مخابراتی سیستم ✓ شته ☐ نشته

6) د سوند توکی لکه لرګی, بنزین, دیزل ضرورت لپاره: ✓ شته ☐ نشته
واتن: 1-2.5Km جنوب لوری او بیه

7) عامه ترانسپورت لکه ملی بس, تکسی, مسافر وړونکی بس: ✓ شته ☐ نشته
کرایه: 10AF

8) ساختمانی ماشنری او وسایل له کم خای څخه راوړلی شی: د لنګر ګاه په ښار کښې
پیدا کیږی او هم د قندهار نه راوړل کیږی مګر یو لږ ده کښې چې مشکل ته مخته
واتن: 2-3Km لنګر ګاه ، قندهار 150Km

9) د سوند توکی د ماشینری لپاره: ✓ شته ☐ نشته
واتن: 1-2.5K لوری او بیه

10) کلینک په ساحه که: ✓ شته ☐ نشته
واتن: 1-2Km جنوب لوری لوری

مهربانی وکړی د ساحی ترسیم شوی پلان علاوه کړی:

5

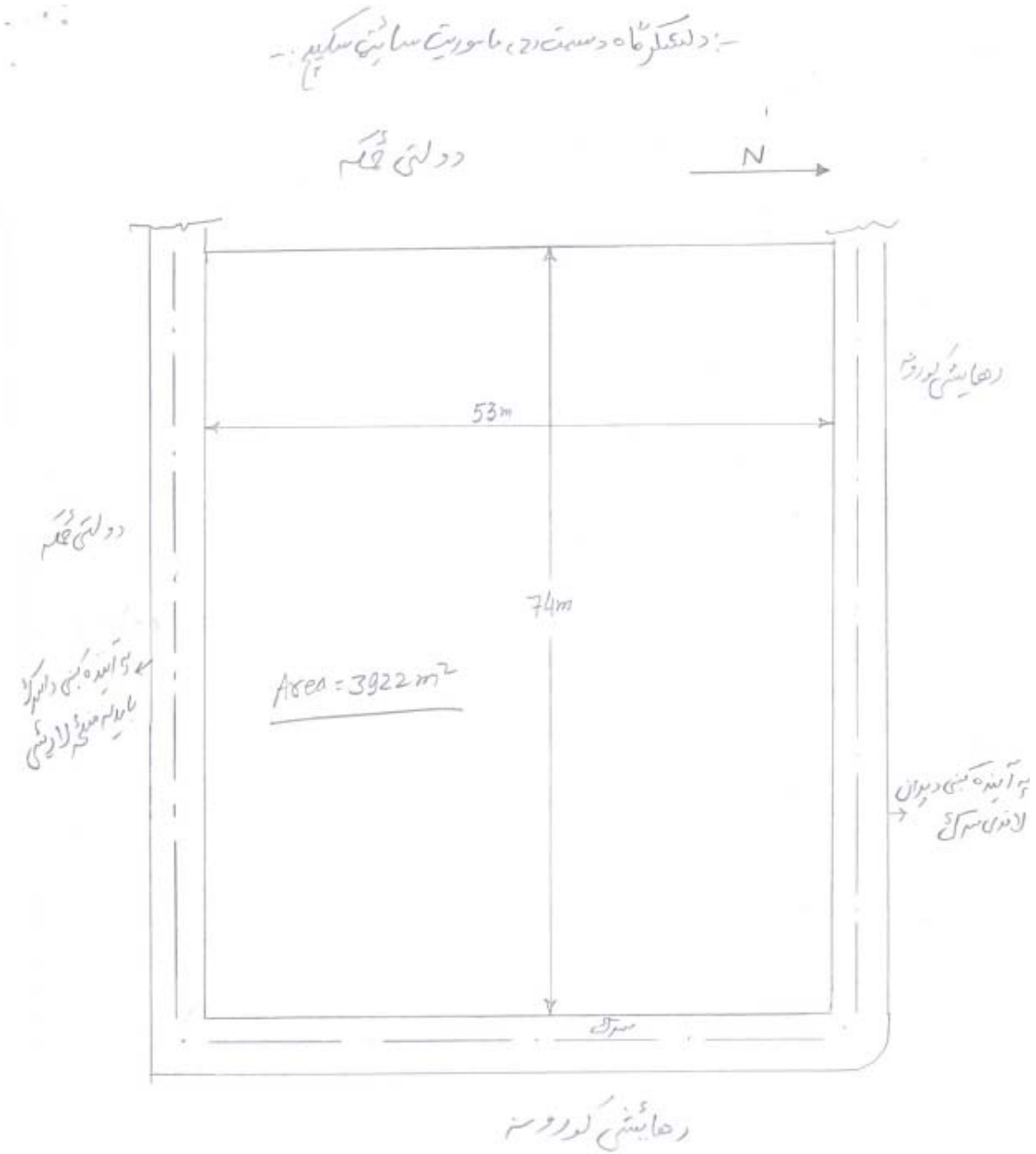
N
53m
74m
Area = 3922 m2

## Field Report

Name of Site: **2nd UP Regional HQ @ Lashkargah, Helmand**

Date of Assessment: **10-May- 2009**

Names of Engineers: MACTEC rep. **Aminullah Azimi**

Location: 2-3km to the Northeast of Provincial Capital, 650km to the Southwest of Kabul

Security: GOOD ✔ NORMAL BAD

Elevation: **792 meters**

Property Ownership questions: **Government owns land.**

### SITE GENERAL CONDITIONS

**A. Current land use of proposed site:**

The proposed site is a rectangular-shaped area, which is bounded on the north by an area planned for a 12m road, then residential houses. To the south it is bounded by an existing 12m road, then government land (which is designated for other departments) and then after 50m, more residential neighborhoods. To the east the site is bounded by a road and residential houses, and private & governmental land in the west.

**B. Site Corner Locations (GPS Coordinates)**

**Corner 1-** Elev. 791m; 31º 36' 14.6" North, 064º 22´ 47.4" East — Photo: A, B, C

**Corner 2-** Elev. 793m; 31º 36' 14.8" North, 064º 22´ 50.5" East — Photo: D, E, F

**Corner 3-** Elev. 792m; 31º 36' 13.1" North, 064º 22´ 50.2" East — Photo: G, H, I

**Corner 4-** Elev. 792m; 31º 36' 12.9" North, 064º22'47.2'' East — Photo: J, K, L

### EXISTING FACILITIES ON SITE

None.

**A. Extra material at site:**

None.

**B. Land use of surrounding area:** The site can not be expanded on any direction because it is bounded by planned roads, residential houses, private land, and planned governmental land.

North: Planned road, residential houses & government land planned for a park.

South: Open government land, then after 50meters, residential houses.

East: Road and residential houses

West: Open government land

### UTILITIES

**A. Electricity**

There is no municipal electrical supply and no generators at the proposed site because there are no buildings at the area.

**B. Water**

Water level is about 30 - 80m deep; nearby local people use mountain runoff water as well.

**C. Sewage**

No sewage system exists at the area.

**CONSTRUCTABILITY OF THE SITE**

**A. Vehicle access** Asphalt ✔ Gravel Bad Under repair

The proposed site has no major problem during the winter but during the rainy weather the road will get muddy.

**B. Topography**

A. Hills (Grids)

None

B. Depressions (Grids)

None

C. Wadis (Grids)

None

D. Drainage Issues/ Flood Control

The proposed site can be affected by flood water.

E. Isolation.

The proposed site is not surrounded by any kind of mountain or river.

F. Mines & Demining

No indication of mines or UXO hazards.

**Any additional conditions affecting the Site's Constructability**

The proposed site needs some minor leveling.

**LOCAL or NEARBY RESOURCES:**

- **Unskilled laborers will be mobilized from** Nearby market, Lashkargah City ($5-$6/day)
- **Skilled laborers will be mobilized from** Nearby market, Lashkargah City ($10-$12/day )
- **Material like Sand, Gravel, Stone, crushed, -** Not Available ✔ Available 5 – 10km to the south; but if insufficient supply, materials must be mobilized from surrounding districts (100 – 150km)

  **Other material like Cement, Steel bar, Brick ,Lime, Gypsum will be mobilized from :** Kandahar (150km)
- **Telephone communication** : Not Available ✔ Available
- **Fuel For heating and cooking** Not Available ✔ Available (wood, diesel) to the south 1 – 2.5km
- **Public Transportation** Not Available Scarce ✔ Available (Buses, Taxis, Coaches)

- **Construction Machinery and Equipment will be mobilized from** Lashkargah City and Kandahar but security problems exist on the way. Distance: Lashkargah (2 – 3km) Kandahar (150km)
- **Fuel For machines** Not Available ✔ Available Nearest fuel tank, 1 – 2.5km
- **Clinic** Not Available ✔ Available 1 – 2km to the Southwest

•**Other**:

**Lashkargah UP District site sketch**

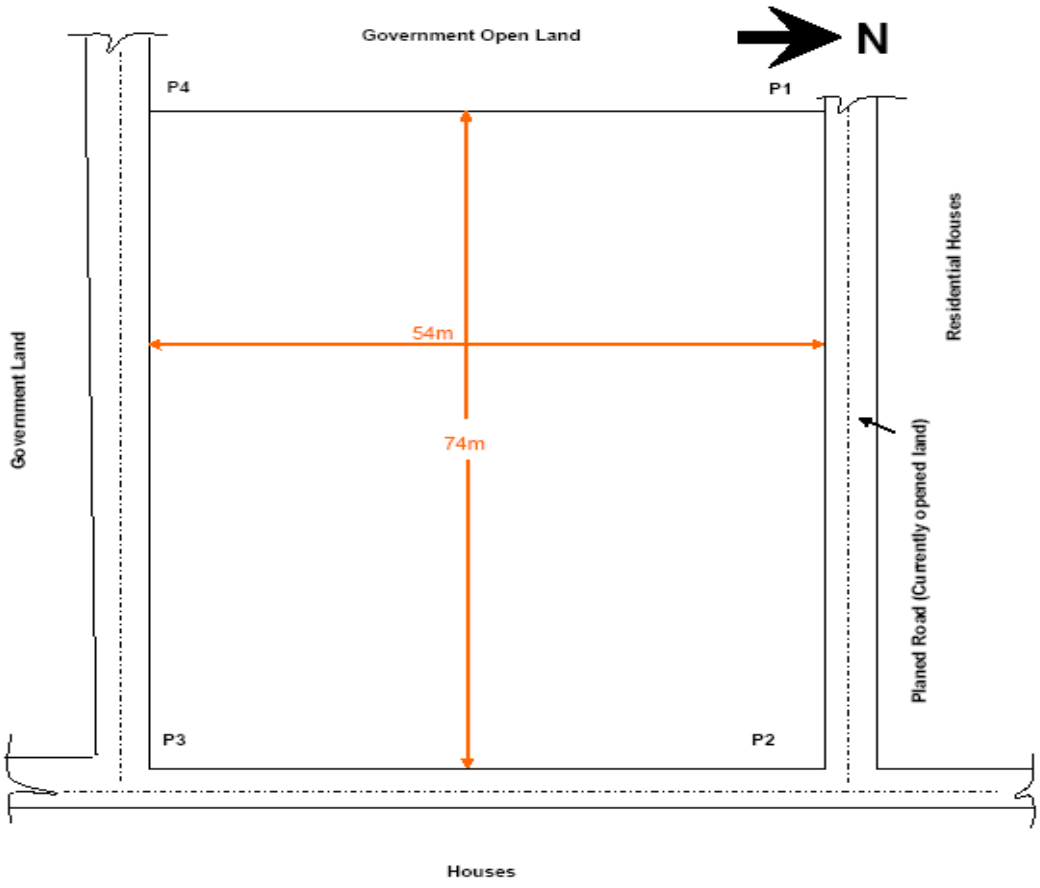

# APPENDIX D
# ADDITIONAL SITE PHOTOGRAPHS

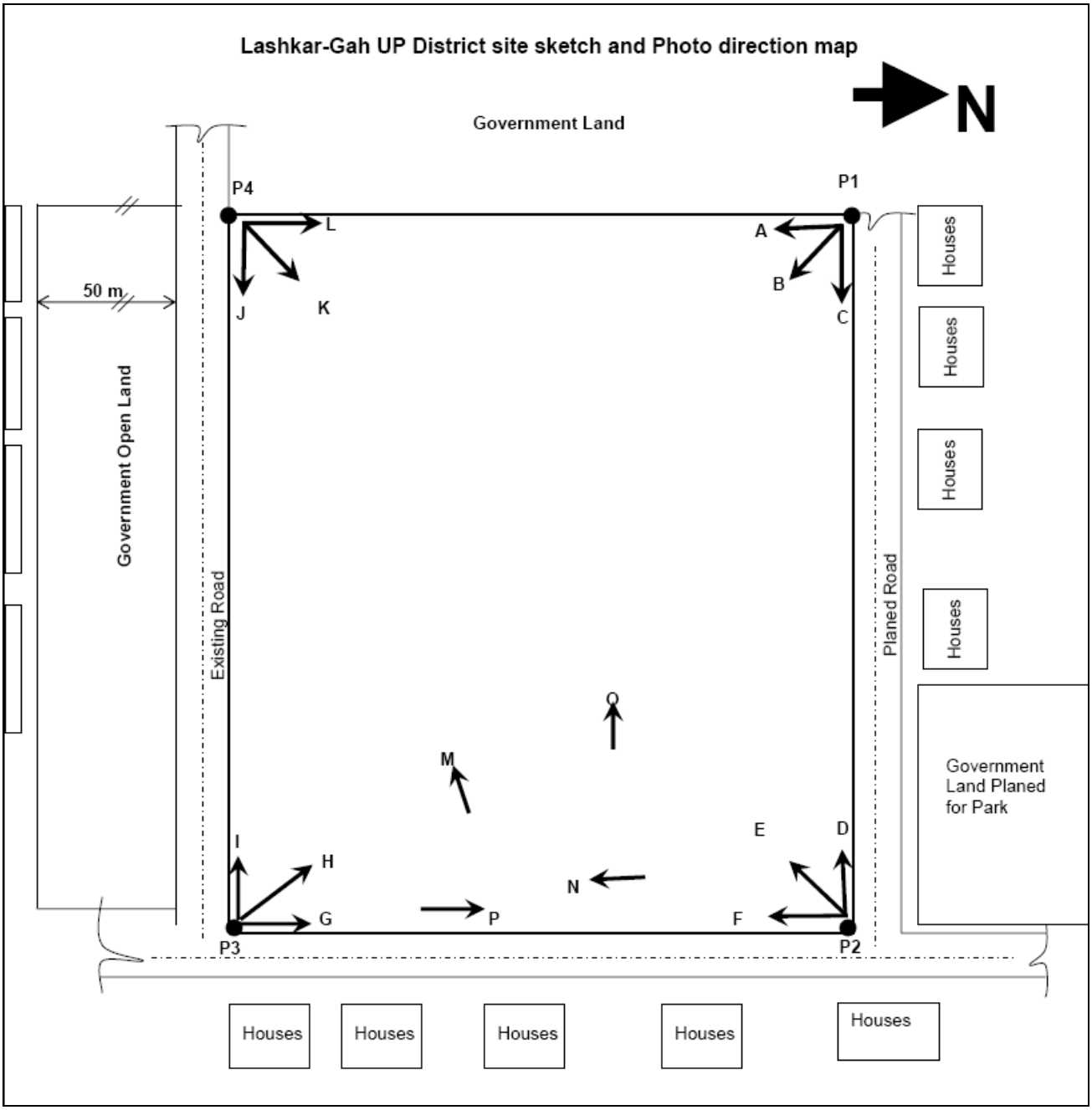
Lashkar-Gah UP District site sketch and Photo direction map
N
Government Land
P4
P1
L
A
B
J
K
C
50 m
Government Open Land
Existing Road
Planed Road
Houses
Houses
Houses
Houses
Government Land Planed for Park
O
M
E
D
I
H
N
G
P
F
P3
P2
Houses
Houses
Houses
Houses
Houses

M - to Southwest

N - to South

O - to West

P-to North