Afghanistan National Police (ANP)

UP District Headquarters (2 Story)

Afghanistan

US Army Corps
of Engineers
Transatlantic Programs Center
Afghanistan Engineer District

19 January 2009

DRAWING INDEX

SHT.REF. NO.	FILE NO.	REVISIONS REV. NO.	REVISIONS AM/COP NO.	TITLE
	AF0701--GI01GN			DRAWING INDEX
				SITE DESIGN
C-1	AF0701--CI01PN			SITE PLAN
C-2	AF0701--CI02DT			DETAILS
C-3	AF0701--CI03DT			DETAILS
C-4	AF0701--CI04DT			WELL PLAN AND SECTION
C-5	AF0701--CI05DT			WELL PLAN DETAILS
C-6				NOT USED
C-7	AF0701--CI07DT			PIPING DETAILS
C-8	AF0701--CI08DT			STANDARD PLUMBING DETAILS
C-9	AF0701--CI09DT			SEPTIC TANK DETAILS
XM-1	AF0701--MS01PN			MECHANICAL SITE PLAN
XM-2	AF0701--MS02DI			FUEL OIL SCHEMATIC
XE-1	AF0701--ES01PN			ELECTRICAL SITE PLAN
XE-2	AF0701--ES02DI			ONE LINE DIAGRAM
				POLICE HEADQUARTERS (A)
A-1	AF0701A-AR01PN			FIRST FLOOR PLAN
A-2	AF0701A-AR02PN			SECOND FLOOR PLAN
A-3	AF0701A-AR03EL			BUILDING ELEVATIONS
A-4	AF0701A-AR04SE			BUILDING SECTION
A-5	AF0701A-AR05PN			ROOF PLAN
A-6	AF0701A-AR06SC			DOOR SCHEDULE
A-7	AF0701A-AR07SC			FINISH SCHEDULE
S-1	AF0701A-SB01PN			FOUNDATION PLAN
S-2	AF0701A-SB02PN			FIRST FLOOR STRUCTURAL PLAN
S-3	AF0701A-SB03PN			LOWER ROOF STRUCTURAL PLAN
S-4	AF0701A-SB04PN			UPPER ROOF STRUCTURAL PLAN
S-5	AF0701A-SB05SE			INTERIOR TYPICAL STAIRWAY
S-6	AF0701A-SF06DT			SLAB-ON-GRADE DETAILS
S-7	AF0701A-SF07DT			ROOF BEAM AND STRUCTURAL SLAB DETAILS
S-8	AF0701A-SB08DT			STANDARD BEAM AND COLUMN DETAIL
M-1	AF0701A-MH01PN			FIRST FLOOR HVAC PLAN
M-2	AF0701A-MH02PN			SECOND FLOOR HVAC PLAN
M-3	AF0701A-MH03PN			FIRST FLOOR HEATING PLAN
M-4	AF0701A-MH04PN			SECOND FLOOR HEATING PLAN
M-5	AF0701A-MH05PN			PARTIAL ROOF PLAN
P-1	AF0701A-MP01PN			FIRST FLOOR PLUMBING PLAN
P-2	AF0701A-MP02PN			SECOND FLOOR PLUMBING PLAN
P-3	AF0701A-MP03LS			FIRST FLOOR ENLARGED TOILET PLANS-WTR SUPPLY
P-4	AF0701A-MP04LS			SECOND FLOOR ENLRGED TOILET PLANS-WTR SUPPLY
P-5	AF0701A-MP05LS			FIRST FLOOR ENLARGED TOILET PLANS-WASTE & VENT
P-6	AF0701A-MP06LS			SECOND FLOOR ENLARGED TOILET PLANS-WASTE & VENT
P-7	AF0701A-MP07DI			WATER SUPPLY RISER DIAGRAM
P-8	AF0701A-MP08SC			PLUMBING SCHEDULES
E-1	AF0701A-EL01PN			FIRST FLOOR LIGHTING PLAN
E-2	AF0701A-EL02PN			SECOND FLOOR LIGHTING PLAN
E-3	AF0701A-EP03PN			FIRST FLOOR POWER PLAN
E-4	AF0701A-EP04PN			SECOND FLOOR POWER PLAN
E-5	AF0701A-EL05PN			GROUNDING AND LIGHTNING PROTECTION PLAN
E-6	AF0701A-EP06SC			PANEL SCHEDULES
E-7	AF0701A-EP07SC			PANEL SCHEDULES

SHT.REF. NO.	FILE NO.	REVISIONS REV. NO.	REVISIONS AM/COP NO.	TITLE
				GUARD TOWER (E)
A-1	AF0701E-AR01PN			FLOOR PLANS AND ELEVATIONS
S-1	AF0701E-SB01PN			FOUNDATION AND SLAB PLAN ROOF FRAMING PLAN
S-2	AF0701E-SB02DT			FOOTING DETAILS
S-3	AF0701E-SF03DT			SLAB-ON-GRADE DETAILS
S-4	AF0701E-SF04DT			ROOF BEAM AND STRUCTURAL SLAB DETAILS
M-1	AF0701E-MH01PN			HVAC PLAN
E-1	AF0701E-EL01PN			LIGHTING & POWER PLAN
				GUARD SHACK (F)
A-1	AF0701F-AR01PN			FLOOR PLANS AND ELEVATIONS
S-1	AF0701F-SB01PN			FOUNDATION AND SLAB PLAN ROOF FRAMING PLAN
S-2	AF0701F-SB02DT			FOOTING DETAILS
S-3	AF0701F-SF03DT			SLAB-ON-GRADE DETAILS
S-4	AF0701F-SF04DT			ROOF BEAM AND STRUCTURAL SLAB DETAILS
M-1	AF0701F-MH01PN			HVAC PLAN
E-1	AF0701F-EL01PN			LIGHTING & POWER PLAN

SYMBOL	DESCRIPTION	DATE	AGP

US Army Corps of Engineers
Transatlantic Programs Center

AFGHANISTAN NATIONAL POLICE HEADQUARTERS (2 STORY) COMPOUND
AFGHANISTAN
DRAWING INDEX SHEET 1

DRAWING INDEX

SHT.REF. NO.	FILE NO.	REVISIONS REV. NO.	REVISIONS AM/COP NO.	TITLE
	AF0701--GI02GN			DRAWING INDEX
				SUNSHADE (G)
A-1	AF0701G-AR01PN			FLOOR PLANS AND BUILDING ELEVATIONS
S-1	AF0701G-SB01PN			STRUCTURAL PLAN AND DETAILS
E-1	AF0701G-EL01PN			LIGHTING AND POWER PLAN
				WELL HOUSE BUILDING (H)
A-1	AF0701H-AR01PN			FLOOR PLAN/ELEVATION/SCHEDULE
S-1	AF0701H-SB01PN			FOUNDATION PLAN AND ROOF PLAN
S-2	AF0701H-SB02DT			FOOTING DETAILS
S-3	AF0701H-SF03DT			SLAB-ON-GRADE DETAILS
S-4	AF0701H-SB04DT			ROOF BEAM AND STRUCTURAL SLAB DETAILS
M-1	AF0701H-MH01PN			HVAC PLAN
E-1	AF0701H-EL01PN			LIGHTING AND POWER PLAN
E-2	AF0701H-EP02SC			PANEL SCHEDULES
				STANDARD DETAILS
SA-1	AF0701$-AR01GN			SYMBOLS AND ABBREVIATIONS
SA-2	AF0701$-AR02DT			DOOR DETAILS AND WALL SECTION
SA-3	AF0701$-AR03DT			WALL TYPES
SA-4	AF0701$-AR04EL			WINDOW DETAILS
SS-1	AF0701$-SB01GN			GENERAL NOTES
SS-2	AF0701$-SB02GN			NOTATIONS AND BAR DEVELOPMENT LENGTHS
SS-3	AF0701$-SB03DT			MASONRY DETAILS
SS-4	AF0701$-SB04DT			SLAB-ON-GRADE DETAILS
SS-5	AF0701$-SB05DT			JOINT DETAILS
SS-6	AF0701$-SB06DT			EXTRA REINFORCING AT OPENINGS AND CORNERS
SM-1	AF0701$-MH01GN			LEGEND AND ABBREVIATIONS
SM-2	AF0701$-MH02SC			MECHANICAL SCHEDULES
SM-3	AF0701$-MH03DT			MECHANICAL STANDARD DETAILS
SP-1	AF0701$-MP01GN			LEGEND AND ABBREVIATIONS
SP-2	AF0701$-MP02DT			STANDARD PLUMBING DETAILS
SE-1	AF0701$-EL01GN			LEGENDS AND ABBREVIATIONS
SE-2	AF0701$-EL02DT			STANDARD LIGHTING DETAILS
SE-3	AF0701$-EL03DT			STANDARD LIGHTING DETAILS
SE-4	AF0701$-EL04DT			DUCTBANK DETAILS
SE-5	AF0701$-EL05DT			STANDARD ELECTRICAL DETAILS
SE-6	AF0701$-EL06DT			POWER PLAND DETAILS
SE-7	AF0701$-EL07DT			LIGHTNING PROTECTION DETAILS
SE-8	AF0701$-EL08DT			HAND HOLE DETAILS

SYMBOL	DESCRIPTION	DATE	APP

US Army Corps of Engineers
Transatlantic Programs Center

AFGHANISTAN NATIONAL POLICE HEADQUARTERS (2 STORY) COMPOUND
AFGHANISTAN
DRAWING INDEX SHEET 2

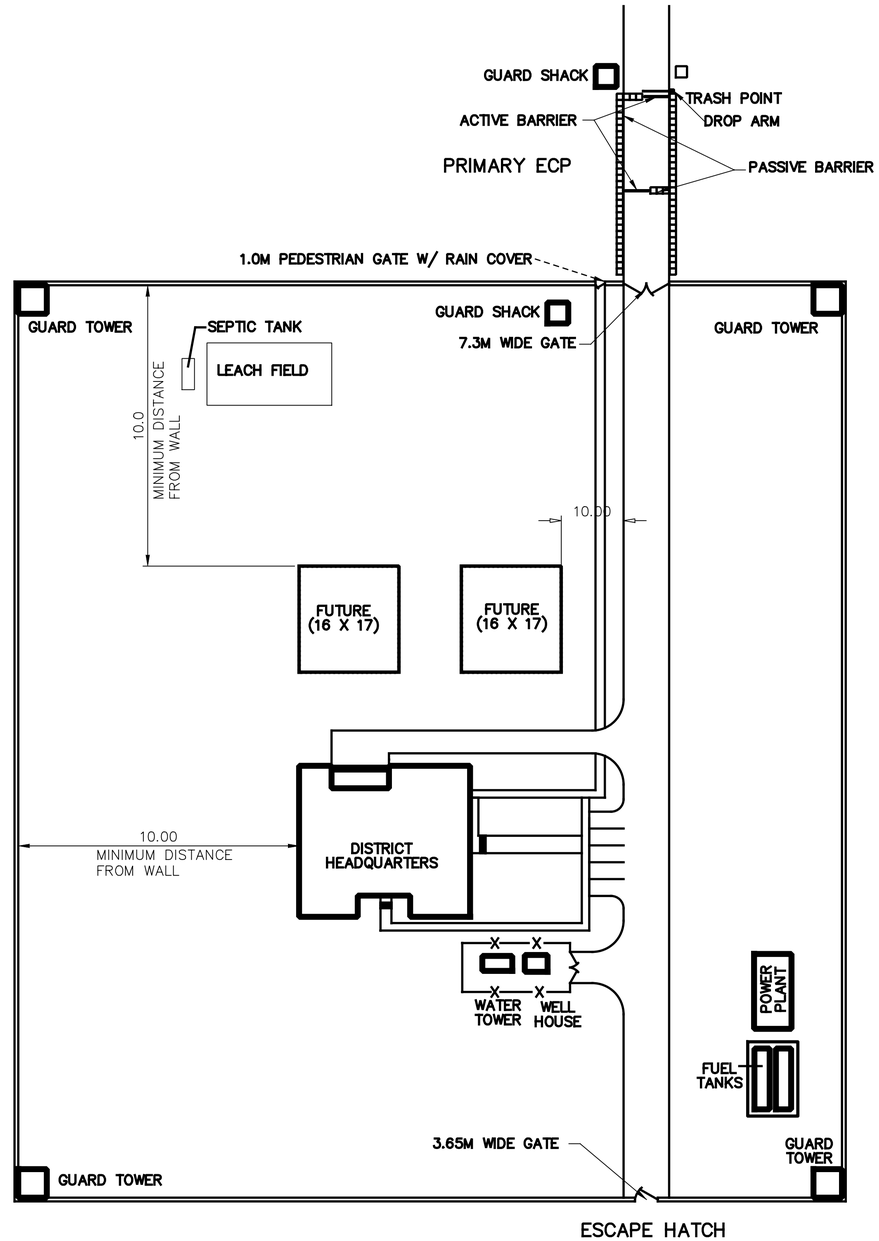

10 0 10 20 30 40
1:500

SYMBOL	REVISIONS	DESCRIPTION	DATE	APP
*			19/03/2007	

DESIGNED BY: MW
DWN BY: TSR
CHK BY: REK
DATE: 19 January 2009
SUBMITTED BY:
FILE NO.: AF0701 ---C101PN

US Army Corps of Engineers
Transatlantic Programs Center

AFGHAN NATIONAL POLICE
UP DISTRICT HEADQUARTERS
(2 STORY)
AFGHANISTAN
SITE DESIGN
SITE PLAN

SHEET REFERENCE NUMBER:
C-1

$DATE$
$FILE$

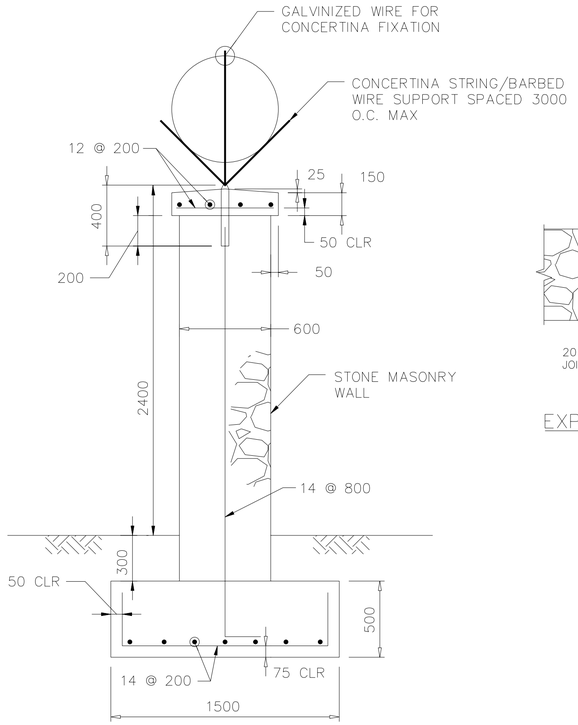

SECTION A
NOT TO SCALE

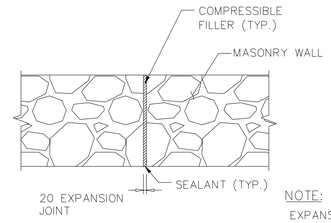

NOTE:
EXPANSION JOINTS SHALL BE SPACED A MAXIMUM OF 40,000.

STONE WALL
EXPANSION JOINT DETAIL
NOT TO SCALE

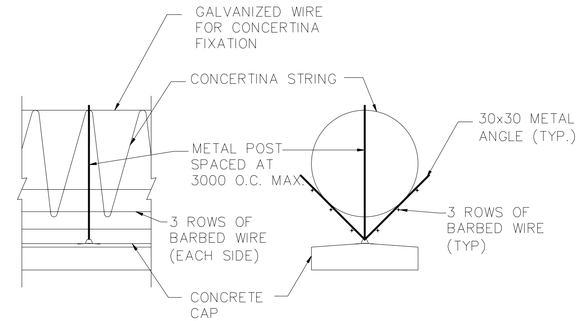

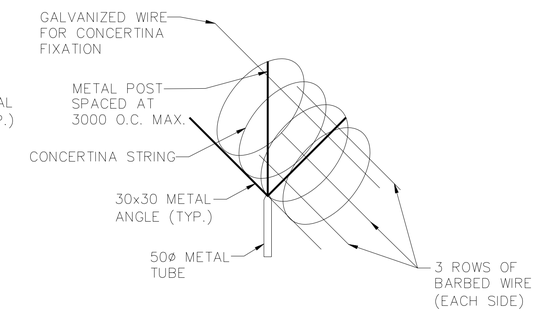

CONCERTINA STRING & BARBED WIRE DETAILS
NOT TO SCALE

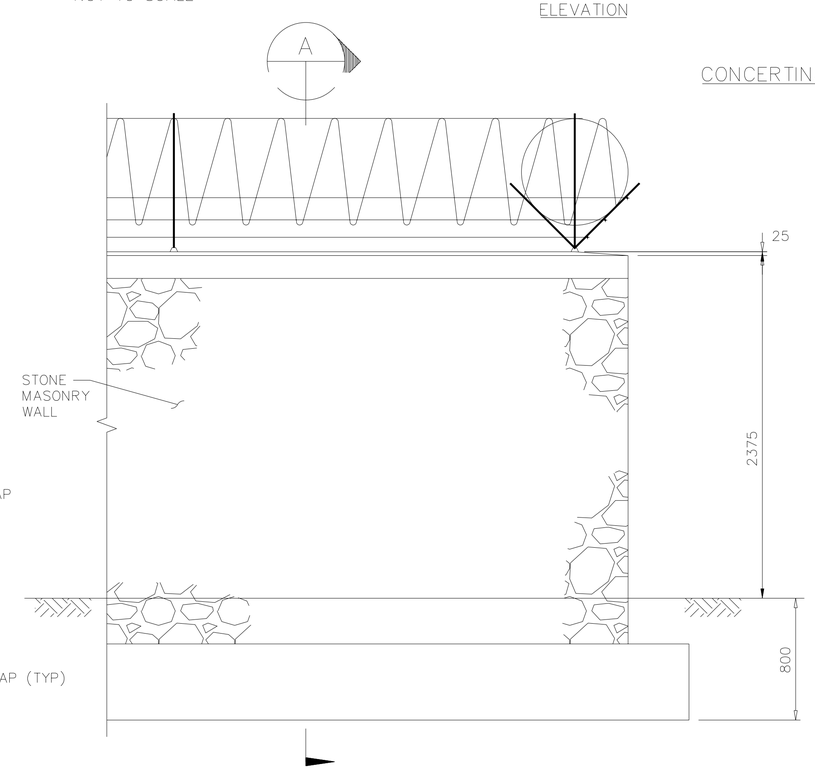

ELEVATION B
NOT TO SCALE

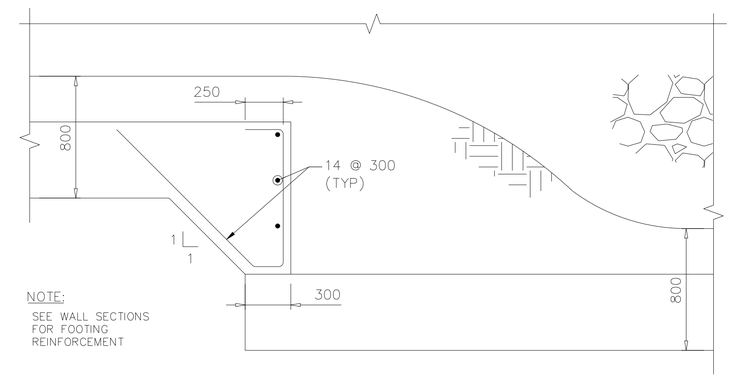

NOTE:
SEE WALL SECTIONS FOR FOOTING REINFORCEMENT

STEPPED FOOTING DETAIL FOR
GRADE CHANGE GREATER THAN 15 DEGREES
NOT TO SCALE

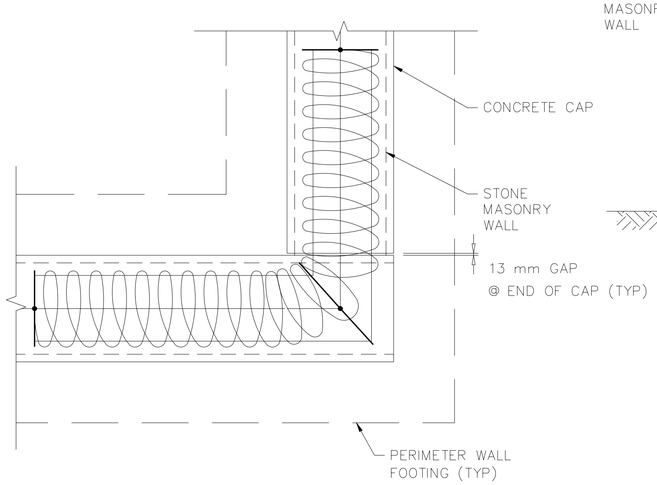

PERIMETER – STONE WALL CORNER – PLAN
(END CONDITION SIMILAR)
NOT TO SCALE

REVISIONS			
SYMBOL	DESCRIPTION	DATE	APP
		19/03/2007	

DESIGNED BY: MW
DATE: 19 January 2009
DWN BY: TSR
SUBMITTED BY:
CHK BY: REK
FILE NO.: AF0701 —C102DT

US Army Corps of Engineers
Transatlantic Programs Center

AFGHAN NATIONAL POLICE
UP DISTRICT HEADQUARTERS
(2 STORY)
AFGHANISTAN
SITE DESIGN
DETAILS

SHEET REFERENCE NUMBER:
C–2

$DATE$
$FILE$

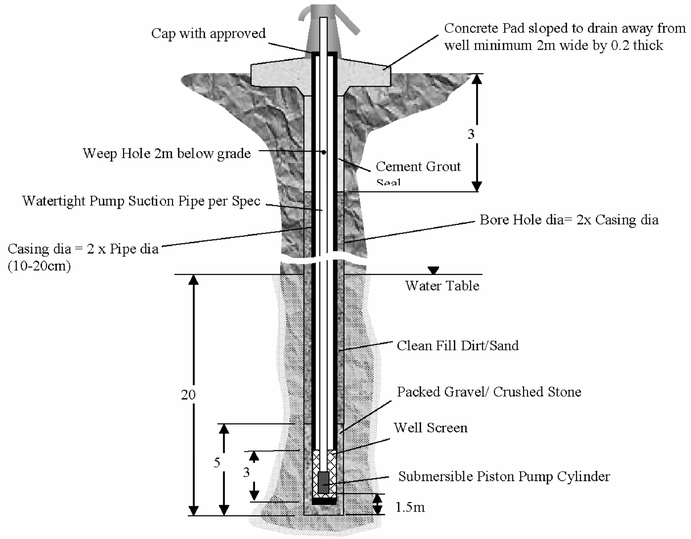

Sample Well Installation Drawing

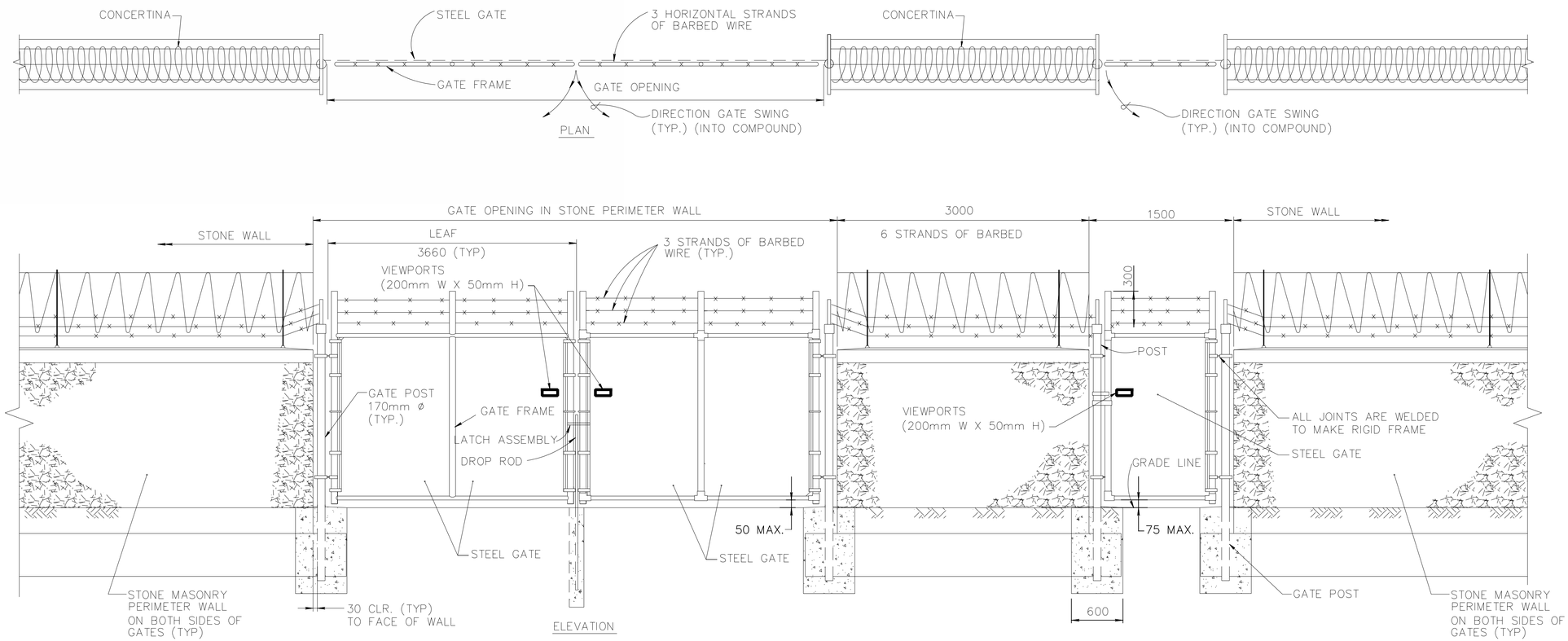

DOUBLE SWING GATE
NTS

PERSONNEL GATE
NTS

SYMBOL	DESCRIPTION	DATE	APP

DESIGNED BY: MW
DWN BY: TSR
CHK BY: REK
DATE: 19 January 2009
SUBMITTED BY:
FILE NO.: AF0701 —C103DT

US Army Corps of Engineers
Transatlantic Programs Center

AFGHAN NATIONAL POLICE
UP DISTRICT HEADQUARTERS
(2 STORY)
AFGHANISTAN
SITE DESIGN
DETAILS

SHEET REFERENCE NUMBER:
C—3

$DATE$
$FILE$

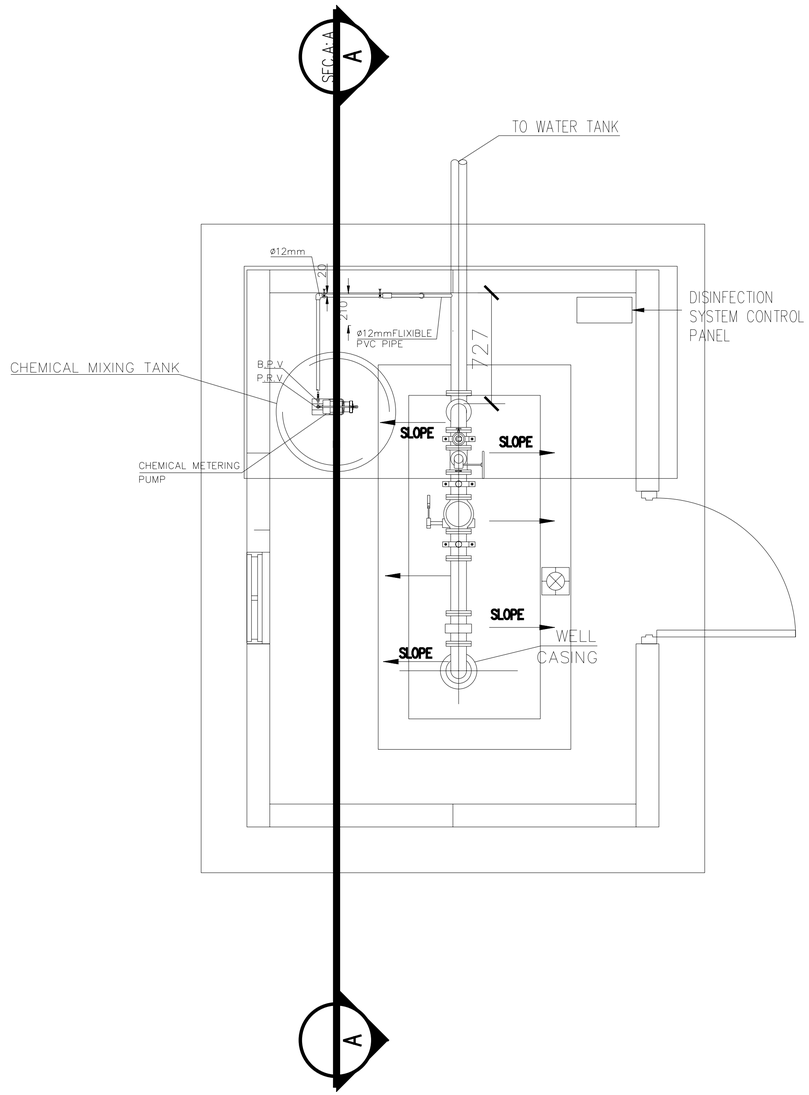

FLOOR PLAN
NOT TO SCALE

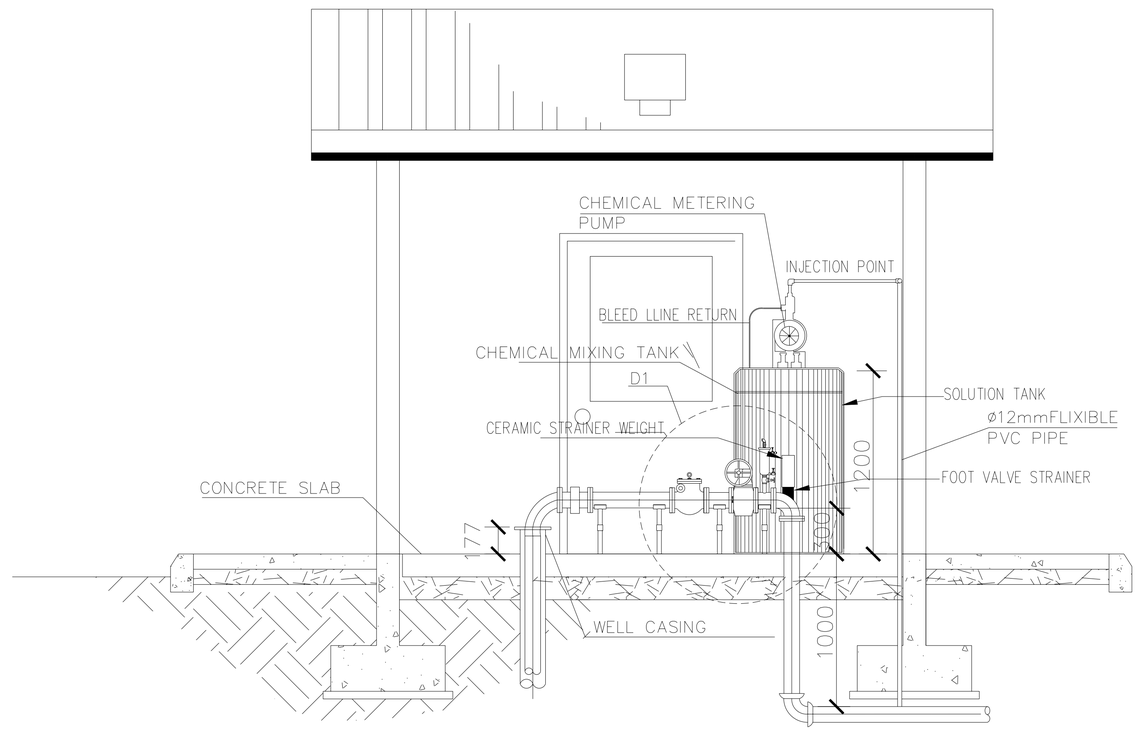

SECTION A–A
NOT TO SCALE

UNLESS OTHERWISE NOTED, LINEAR DIMENSIONS SHOWN ARE IN MILLIMETERS.

REVISIONS				
SYMBOL	DESCRIPTION	DATE	APP	
		19/03/2007		

DESIGNED BY: MW
DWN BY: TSR
CHK BY: REK
DATE: 19 January 2009
SUBMITTED BY:
FILE NO.: AF0701 ---C1040T

US Army Corps of Engineers
Transatlantic Programs Center

AFGHAN NATIONAL POLICE
UP DISTRICT HEADQUARTERS
(2 STORY)
AFGHANISTAN
SITE DESIGN
WELL PLAN AND SECTION

SHEET REFERENCE NUMBER:
C–4

$DATE$
$FILE$

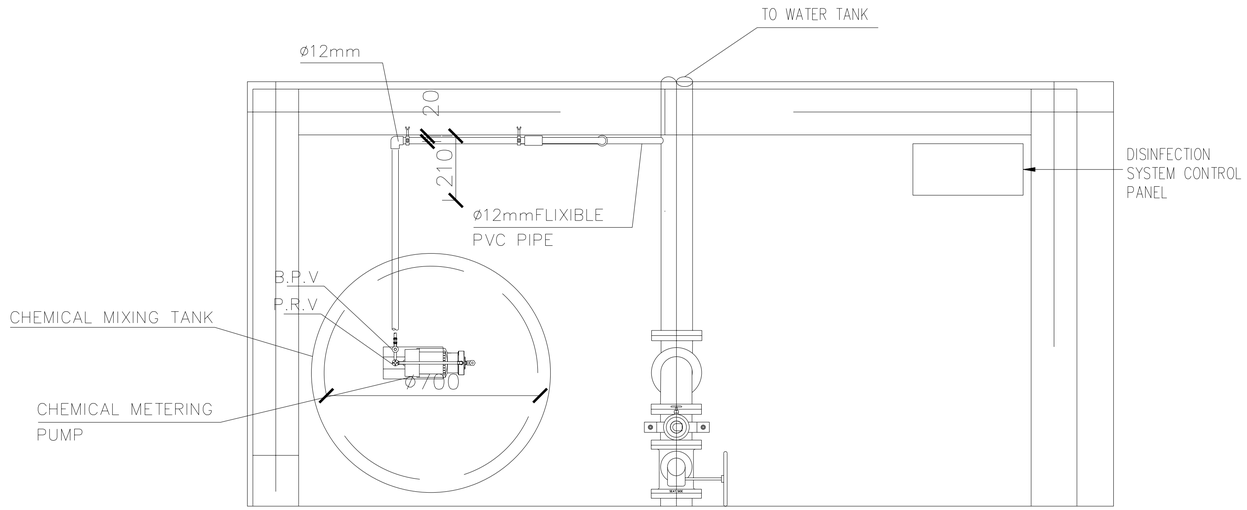

DETAIL 2
NOT TO SCALE

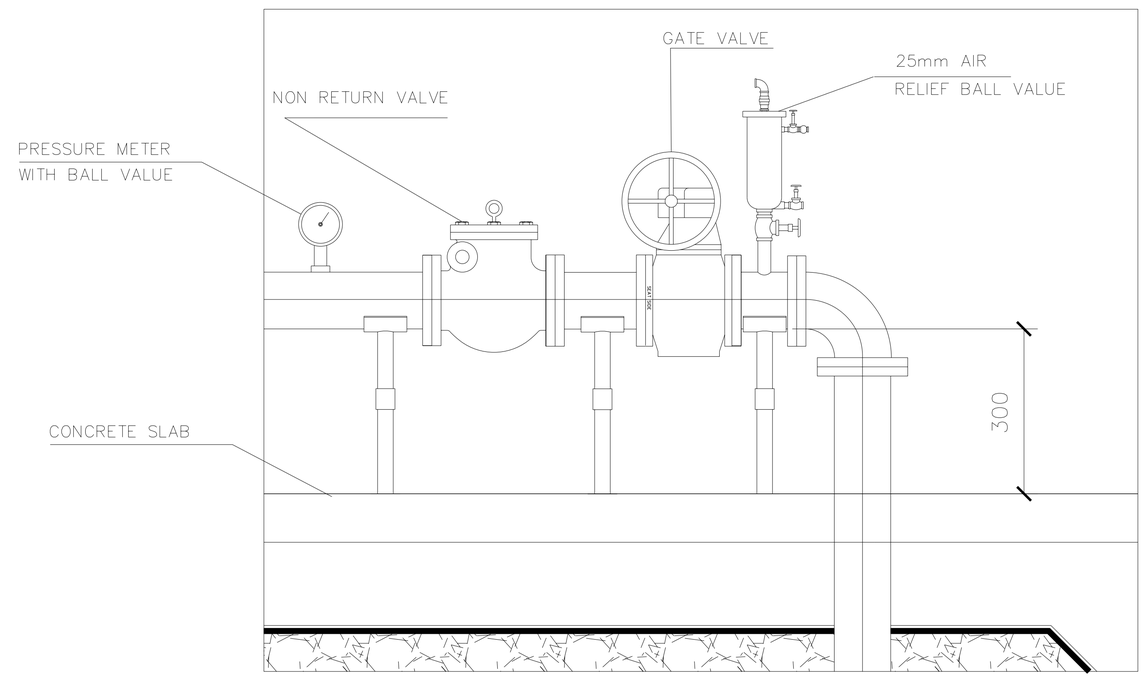

DETAIL 1
NOT TO SCALE

UNLESS OTHERWISE NOTED, LINEAR DIMENSIONS SHOWN ARE IN MILLIMETERS.

SYMBOL	REVISIONS DESCRIPTION	DATE	APP
		19/03/2007	

DESIGNED BY: MW
DATE: 19 January 2009
DWN BY: TSR
SUBMITTED BY:
CHK BY: REK
FILE NO.: AF0701 —C050T

US Army Corps of Engineers
Transatlantic Programs Center

AFGHAN NATIONAL POLICE
UP DISTRICT HEADQUARTERS
(2 STORY)
AFGHANISTAN
SITE DESIGN
WELL PLAN DETAILS

SHEET REFERENCE NUMBER:
C–5

$DATE$
$$FILE$

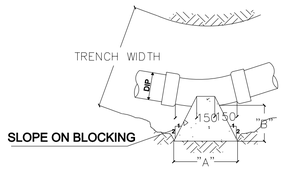

PLAN VIEW

NOTE:
VERTICAL HIGHT
"C" DIMENSION

45°	A	B	C
50	100	NOTE 9	300
75	200	NOTE 9	400
100	300	NOTE 9	400
150	500	NOTE 9	500

22 1/2°	A	B	C
50	100	NOTE 9	200
75	200	NOTE 9	300
100	200	NOTE 9	300
150	400	NOTE 9	400

BLOCKING DETAIL FOR 22 1/2° & 45° BENDS

SCALE :NTS

D1

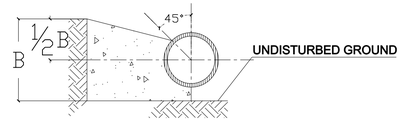

BENDS & TEES

SCALE 1:20

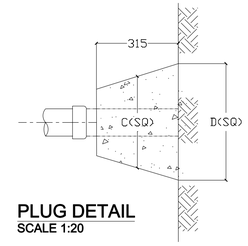

PLUG DETAIL

SCALE 1:20

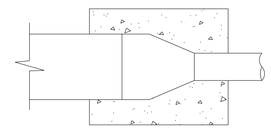

REDUCER DETAIL

SCALE 1:20

D2

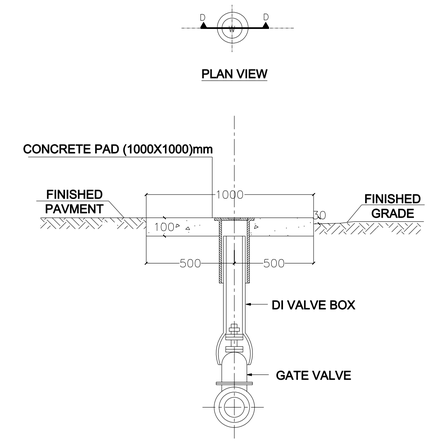

PLAN VIEW

CROSS SECTION

INLINE VALVE BLOCKING DETAIL

SCALE :NTS

D3

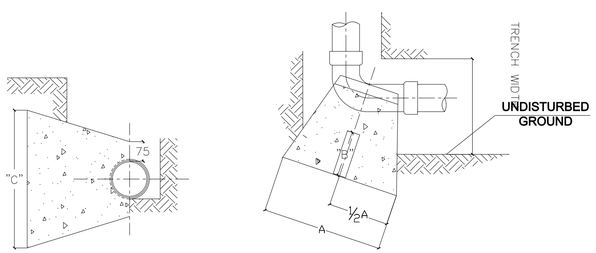

CROSS SECTION

PLAN VIEW

90°	A	B	C
50	200	NOTE 9	300
75	300	NOTE 9	400
100	400	NOTE 9	500
150	600	NOTE 9	700

BLOCKING DETAIL FOR 90° ELBOWS

SCALE :NTS

D4

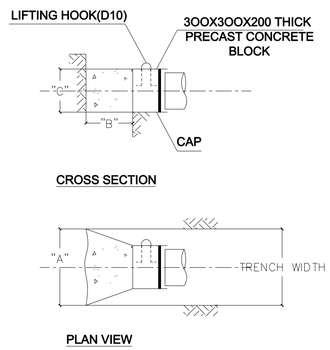

CROSS SECTION

PLAN VIEW

	A	B	C
50	200	NOTE 9	300
75	300	NOTE 9	400
100	300	NOTE 9	500
150	500	NOTE 9	700

BLOCKING DETAIL FOR DEADEND AND BRANCHES

SCALE :NTS

D5

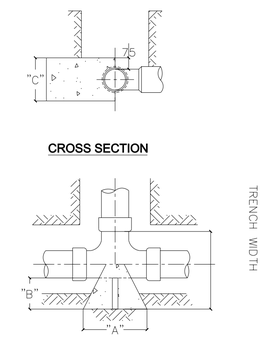

CROSS SECTION

PLAN VIEW

TEE	A	B	C
50	200	NOTE 9	300
75	300	NOTE 9	400
100	300	NOTE 9	500
150	500	NOTE 9	700

BLOCKING DETAIL FOR TEE

SCALE :NTS

D6

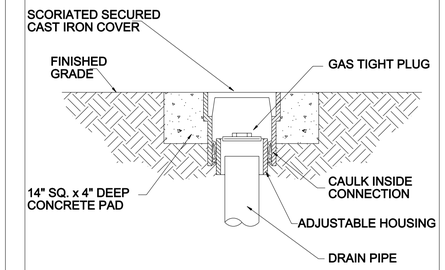

CLEANOUT TO GRADE

SCALE. NTS

D7

NOTE

1. REACTION BEARING AREAS SHALL BE IN A VERTICAL PLAN IN THE TRENCH SIDE AT AN ANGLE OF 90° TO THE THRUST VECTOR.
2. CONCRETE BLOCKING IS TO BE FORMED TO ENSURE ACCESSIBILITY TO FITTING AND POURED AGAINST UNDISTURBED EARTH.
3. FITTING ARE TO COMPLETELY WRAPPED WITH PLASTIC,PRIOR TO POURING CONCRETE.
4. CONCRETE SHALL BE 20 MPa.
5. CONCRETE SHALL NOT CONTACT BOLTS OR ENDS OF MECHANICAL JOINT FITTINGS.
6. TRENCHES SHALL CONFORM TO STANDARD BEDDING DETAIL
7. NOT USED
8. ALL BENDS AND INTERSECTION SHALL HAVE CONCRETE THRUST BLOCKING .
9. USE ONE HALF TRENCH WIDTH PLUS 75mm.

UNLESS OTHERWISE NOTED, LINEAR DIMENSIONS SHOWN ARE IN MILLIMETERS.

SYMBOL	DESCRIPTION	DATE	APP

DESIGNED BY: MW
DATE: 19 January 2009
DWN BY: TSR
SUBMITTED BY:
CHK BY: REK
FILE NO.: AF0701 —C07DT

US Army Corps of Engineers
Transatlantic Programs Center

AFGHAN NATIONAL POLICE
UP DISTRICT HEADQUARTERS
(2 STORY)
AFGHANISTAN
SITE DESIGN
PIPING DETAILS

SHEET REFERENCE NUMBER:
C–7

$DATE$
$$FILE$

NOTE: Hand tamp the backfill fully at the sides of the pipe while tamping lightly over the crown. Hand tamping should continue until a minimum thickness of 300mm has been placed over the pipe.

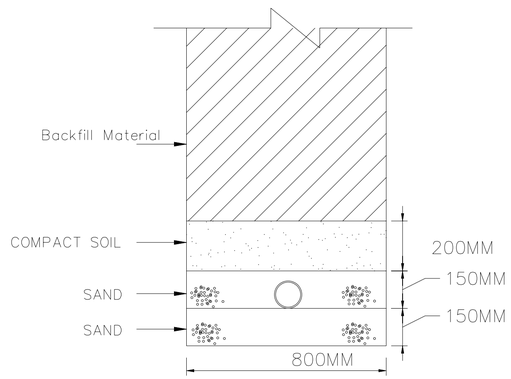

FOR WATER PIPES

NOTE: Hand tamp the backfill fully at the sides of the pipe while tamping lightly over the crown.Hand tamping should continue until a minimum thickness of 300mm has been placed over the pipe.

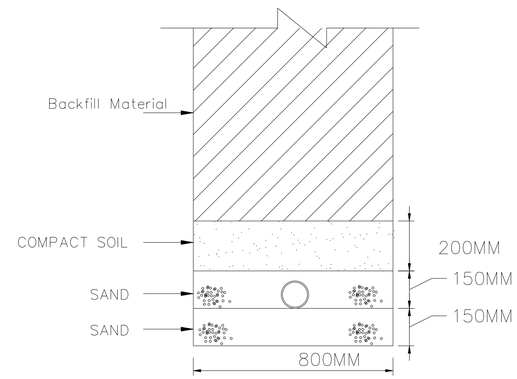

FOR SEWER PIPES

NOTE: WATER LINES LESS THAN 1250mm DEEP UNDER ROAD CROSSING SHALL HAVE A REINFORCED CONCRETE COVER OF AT LEAST 150mm THICKNESS AROUND THE PIPE

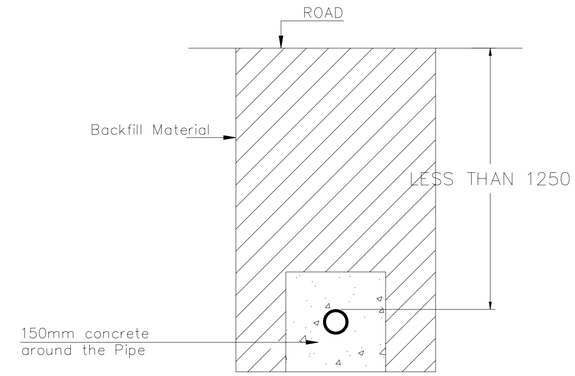

WATER OR SEWER PIPES UNDER THE ROAD

NOTE:

1. WHERE WATER LINES CROSS UNDER GRAVITY FLOW SEWER LINES, THE SEWER PIPE, FOR A DISTANCE OF AT LEAST 3000MM EACH SIDE OF THE CROSSING, SHALL BE FULLY ENCASED IN CONCRETE OR SHALL BE MADE OF PRESSURE PIPE WITH NO JOINT LOCATED WITHIN 900MM HORIZONTALLY OF THE CROSSING.

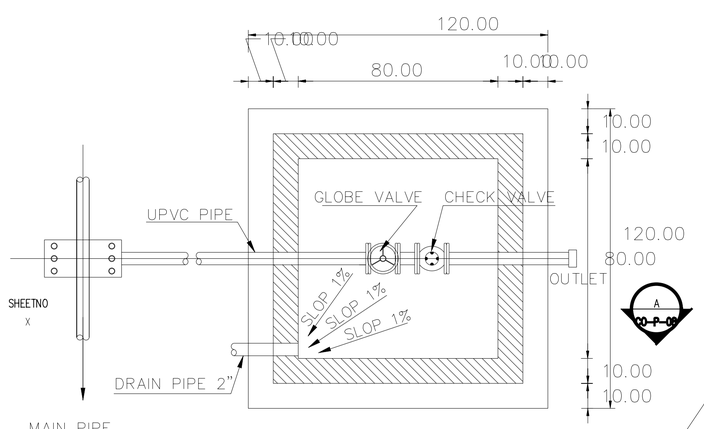

PIPE CONNECTION TO BUILDING PLAN

SCALE: 1:20

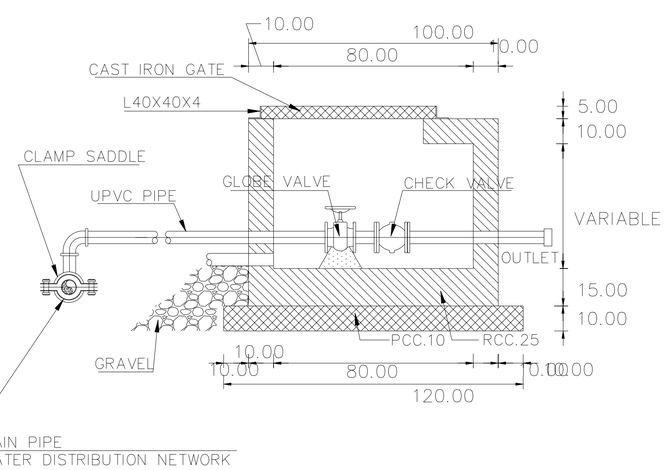

WATER DISTRIBUTION SECTION A–A

SCALE: 1:20

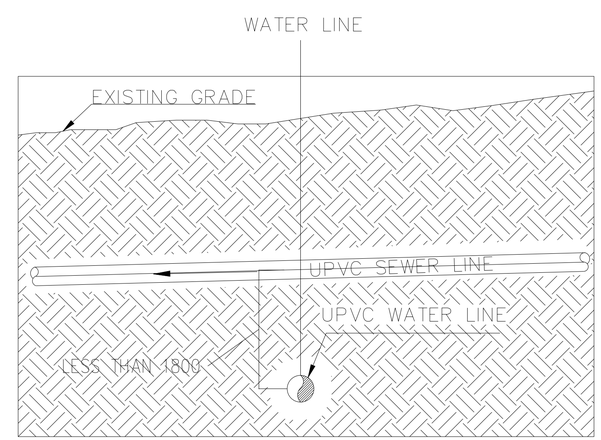

WATER AND SEWER PIPE VERTICAL CROSS SECTION

SCALE: NTS

UNLESS OTHERWISE NOTED, LINEAR DIMENSIONS SHOWN ARE IN MILLIMETERS.

SYMBOL	DESCRIPTION	DATE	APP

DESIGNED BY: MW
DATE: 19 January 2009
DWN BY: TSR
SUBMITTED BY:
CHK BY: REK
FILE NO.: AF0701 —C08DT

US Army Corps of Engineers
Transatlantic Programs Center

AFGHAN NATIONAL POLICE
UP DISTRICT HEADQUARTERS
(2 STORY)
AFGHANISTAN
SITE DESIGN
STANDARD PLUMBING DETAILS

SHEET REFERENCE NUMBER:
C–8

$DATE$
$FILE$

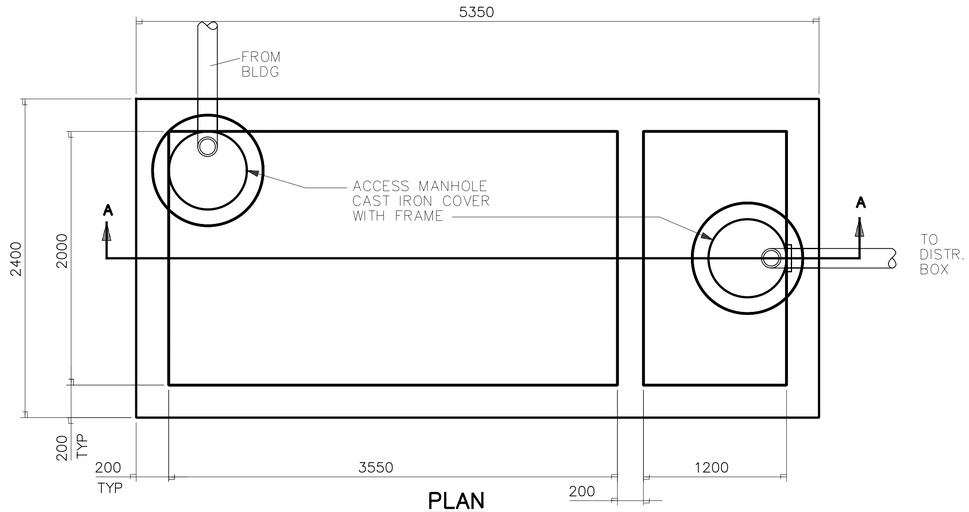

PLAN

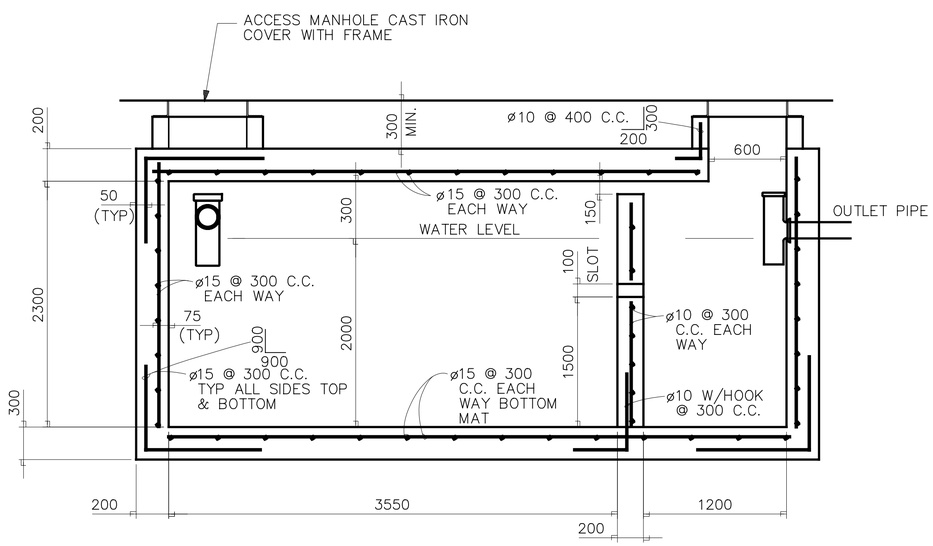

SECTION A–A

CONCRETE SEPTIC TANK DETAILS

NOT TO SCALE

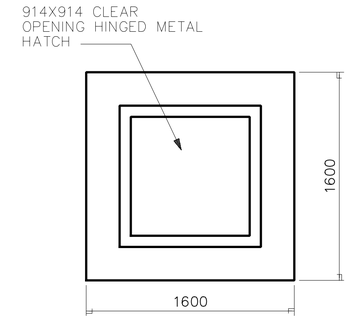

TOP SLAB PLAN

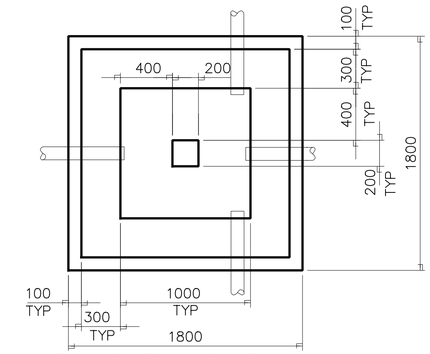

FOUNDATION SLAB PLAN

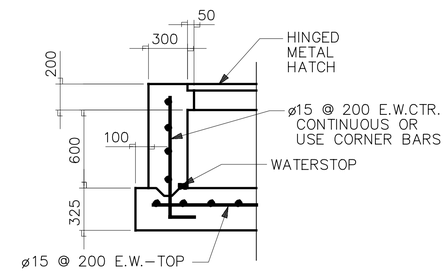

TYP WALL SECTION

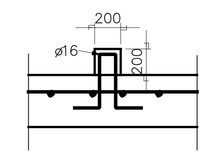

SECTION

DISTRIBUTION BOX

NOT TO SCALE

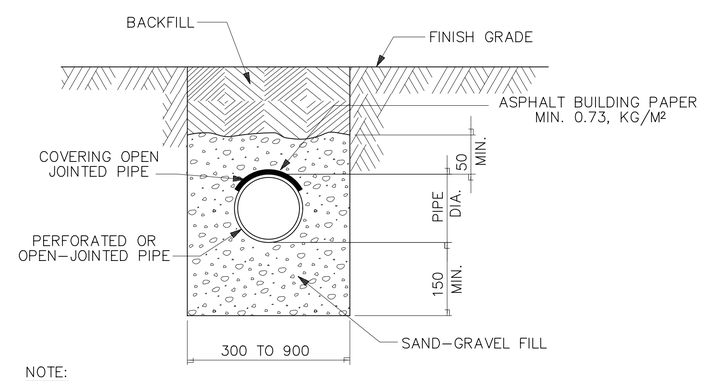

NOTE:
OPEN JOINTS SHALL BE 5 – 10mm WIDE.

TILE FIELD, TRENCH

NOT TO SCALE

UNLESS OTHERWISE NOTED, LINEAR DIMENSIONS SHOWN ARE IN MILLIMETERS.

REVISIONS			
*		19/03/2007	ASP
	SYMBOL	DESCRIPTION	DATE

DESIGNED BY: MW
DATE: 19 January 2009
DWN BY: TSR
SUBMITTED BY:
CHK BY: REK
FILE NO.: AF0701 —C109DT

US Army Corps of Engineers
Transatlantic Programs Center

AFGHAN NATIONAL POLICE
UP DISTRICT HEADQUARTERS
(2 STORY)
AFGHANISTAN
SITE DESIGN
SEPTIC TANK DETAILS

SHEET REFERENCE NUMBER:
C–9

$DATE$
$FILE$

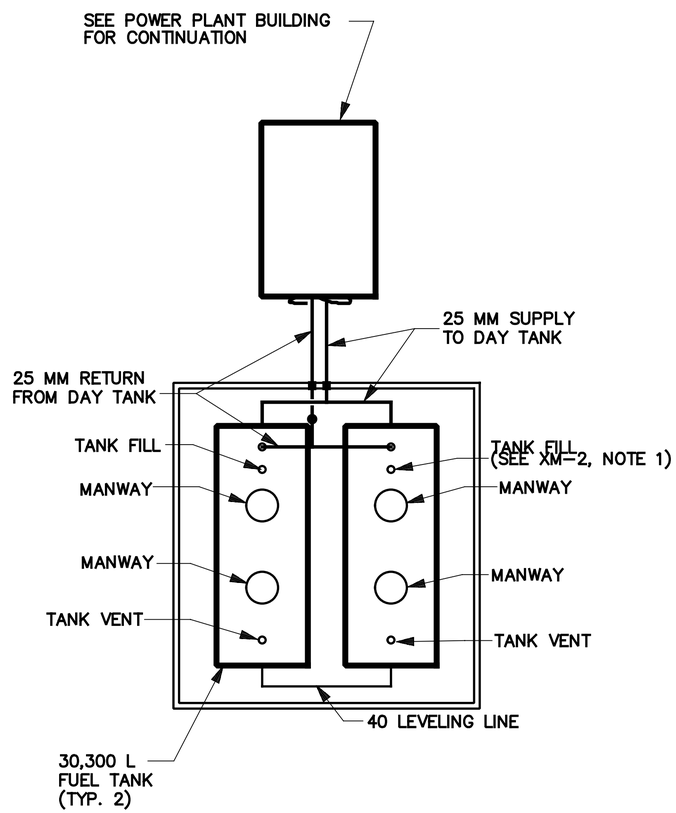

ENLARGED MECHANICAL SITE PLAN

SCALE 1: 100

REVISIONS			
SYMBOL	DESCRIPTION	DATE	APP
		19/03/2007A	

DESIGNED BY: RMS
DWN BY: JMC
CHK BY: SE
DATE: 02-05-07
SUBMITTED BY: SYED ENAYATULLA
CHIEF, PROJ MGMT & ASSOC DEV
FILE NO.: AF0701 —MS01PL

US Army Corps of Engineers
Transatlantic Programs Center

AFGHAN NATIONAL POLICE HEADQUARTERS (2 STORY) COMPOUND
AFGHANISTAN
SITE DESIGN
MECHANICAL SITE PLAN

SHEET REFERENCE NUMBER:
XM-1

$DATE$
$FILE$

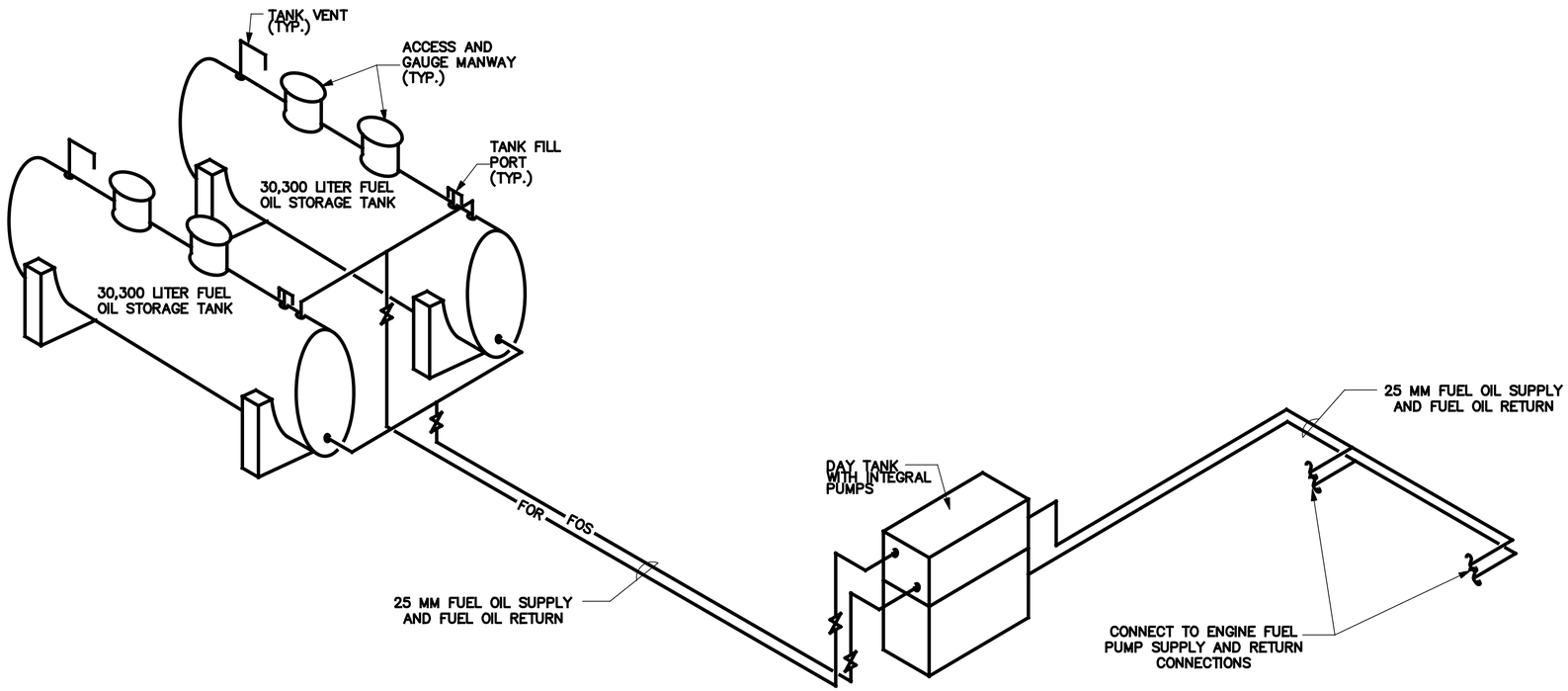

FUEL OIL SCHEMATIC
N.T.S.

UNLESS OTHERWISE NOTED, LINEAR DIMENSIONS SHOWN ARE IN MILLIMETERS.

SYMBOL	REVISION DESCRIPTION	DATE	APP
*		05/04/2007	

DESIGNED BY: RMS
DWN BY: JMC
CHK BY: RMS
DATE: 19 January 2009
SUBMITTED BY:
FILE NO.: AF0701 ---MS02D1

US Army Corps of Engineers
Transatlantic Programs Center

AFGHAN NATIONAL POLICE
UP DISTRICT HEADQUARTERS
(2 STORY)
AFGHANISTAN
SITE DESIGN

FUEL OIL SCHEMATIC

SHEET REFERENCE NUMBER:
XM-2

$DATE$
$FILE$

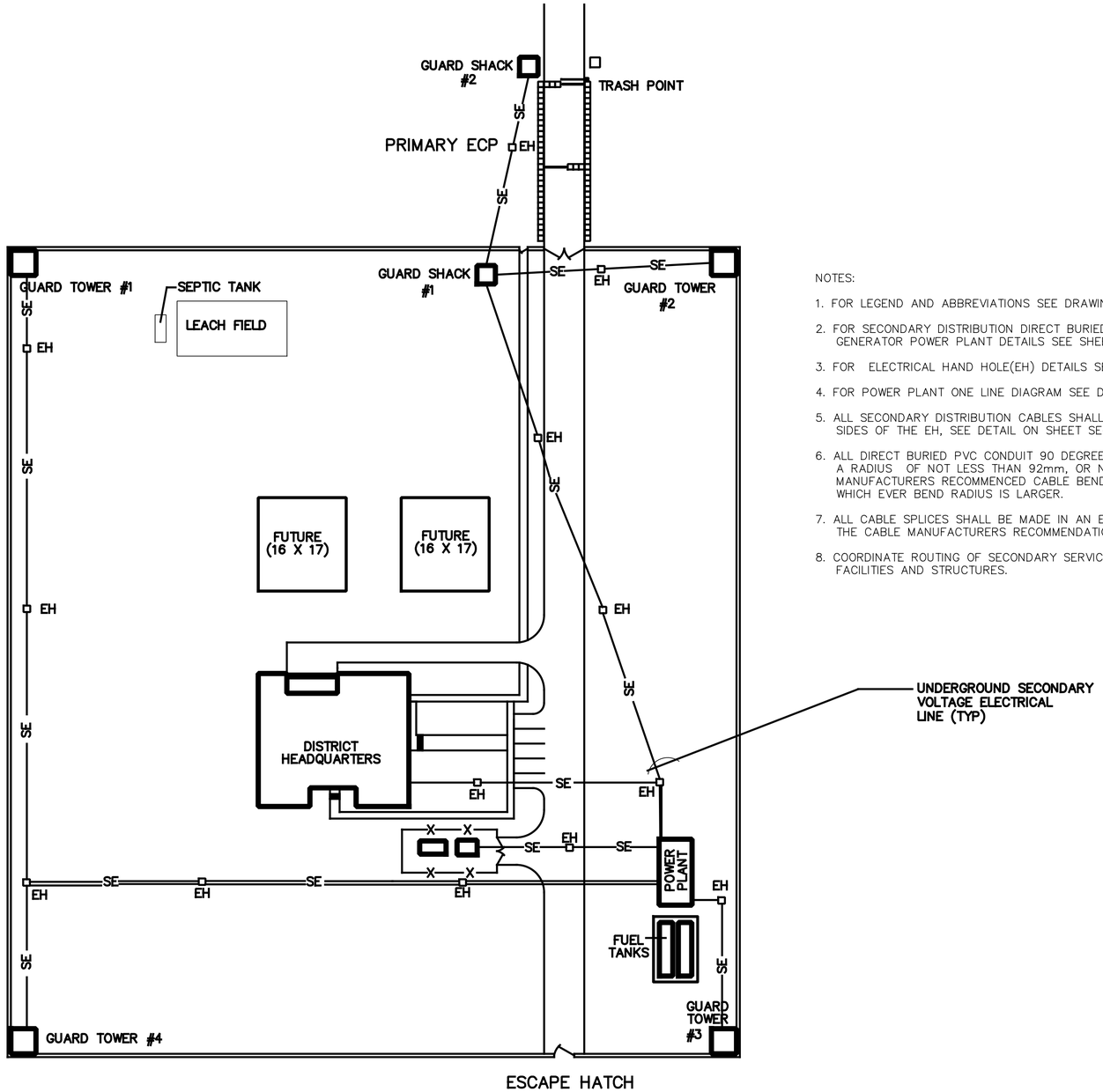

NOTES:

1. FOR LEGEND AND ABBREVIATIONS SEE DRAWING SE–1.
2. FOR SECONDARY DISTRIBUTION DIRECT BURIED (DB) DUCT DETAILS AND GENERATOR POWER PLANT DETAILS SEE SHEET SE–4 AND SE–6.
3. FOR ELECTRICAL HAND HOLE(EH) DETAILS SEE SHEET SE–8.
4. FOR POWER PLANT ONE LINE DIAGRAM SEE DRAWING XE–2.
5. ALL SECONDARY DISTRIBUTION CABLES SHALL BE RACKED ON THE SIDES OF THE EH, SEE DETAIL ON SHEET SE–4.
6. ALL DIRECT BURIED PVC CONDUIT 90 DEGREE BENDS SHALL HAVE A RADIUS OF NOT LESS THAN 92mm, OR NOT LESS THAN THE CABLE MANUFACTURERS RECOMMENCED CABLE BENDING RADIUS, WHICH EVER BEND RADIUS IS LARGER.
7. ALL CABLE SPLICES SHALL BE MADE IN AN EH AND IN ACCORDANCE WITH THE CABLE MANUFACTURERS RECOMMENDATIONS.
8. COORDINATE ROUTING OF SECONDARY SERVICES AS NECESSARY TO AVOID FACILITIES AND STRUCTURES.

SYMBOL	DESCRIPTION	DATE	APP

DESIGNED BY: MM
DWN BY: MM
CHK BY: SE
DATE: 19 January 2009
SUBMITTED BY:
FILE NO.: AF0701 —ES01PN

US Army Corps of Engineers
Transatlantic Programs Center

AFGHAN NATIONAL POLICE
UP DISTRICT HEADQUARTERS
(2 STORY)
AFGHANISTAN
SITE DESIGN
ELECTRICAL SITE PLAN

SHEET REFERENCE NUMBER:
XE–1

10 0 10 20 30 40
1:500

$DATE$
$FILE$

GENERATORS OPERATING LOGIC:
1. ONE GENERATOR SHALL OPERATE AT ALL TIMES.
2. WHEN THE OPERATING GENERATOR REACHES 90% OF IT'S RATED CAPACITY (108KW), THE SECOND GENERATOR SHALL START, SYNCHRONIZE WITH THE OPERATING GENERATOR AND COME ON-LINE TO SHARE THE TOTAL DEMAND LOAD EQUALLY.
3. WHEN THE TOTAL DEMAND LOAD ON THE SWITCHBOARD REACHES 80% OF THE FIRST GENERATOR RATING (96KW), THE SECOND GENERATOR SHALL COME OFF-LINE, RUN THROUGH A COOL DOWN CYCLE AND GO INTO A STAND-BY MODE.
4. GENERATOR SYNCHRONIZING EQUIPMENT SHALL BE ADJUSTABLE BETWEEN 60% TO 95% OF THE GENERATOR RATING.

NOTES:

1. FOR LEGEND AND ABBREVIATIONS SEE DRAWING SE-1.
2. FOR POWER PLANT GROUNDING DETAILS SEE SHEET SE-6.
3. CONTRACTOR SHALL CONFIRM THAT ALL FINAL CIRCUIT RATINGS ARE BASED ON THE ACTUAL NAMEPLATE OF THE SUPPLIED EQUIPMENT.
4. ALL PPSB SECONDARY DISTRIBUTION CIRCUIT CONDUITS SHALL BE RAN FROM THE BOTTOM OF PPSB THROUGH GENERATOR CONCRETE SLAB TO ELECRIC HAND HOLES IN SCHEDULE 80 PVC CONDUIT.
5. ALL SECONDARY DISTRIBUTION CABLES SHALL BE 600V – FOUR CORE OR TWO CORE (AS INDICATED) COPPER CONDUCTOR PVC INSULATED PVC SHEATHED CABLES (CU/PVC/PVC).
6. THE POWER PLANT SWITCHBOARD SHALL BE A MANUFACTURERS STANDARD PRODUCT WITH MOLDED CASE CKT BREAKERS, DEAD FRONT CONSTRUCTION IN AN APPROVED IP54 ENCLOSURE.
7. FOR A TYPICAL POWER PLANT EQUIPMENT LAYOUT SEE THE GROUNDING PLAN ON SHEET SE-6.
8. CONTRACTOR SHALL DESIGN AND CONSTRUCT A COVERED SHELTER/SUNSHADE TO HOUSE THE GENERATORS AND ASSOCIATED SWITCHBOARD AND EQUIPMENT.

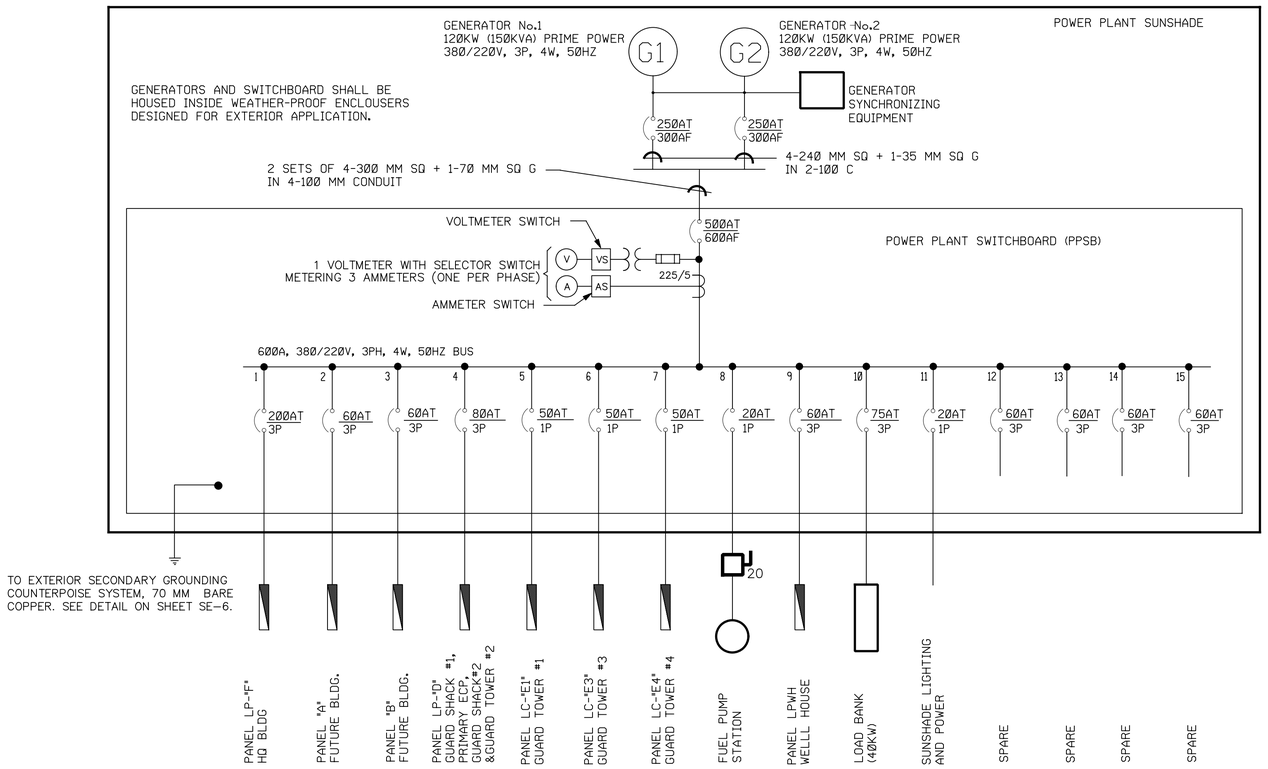

ONE LINE DIAGRAM
NOT TO SCALE

PANELBOARD: PPSB
MOUNTED: FLOOR
ASYM. A.I.C. MIN: MINIMUM 22,000
MAIN BREAKER (AT/AF): 400/500
VOLTAGE RATING: 380/220V, 3PH, 4W, 50HZ
BUS AMP. RATING: 600

CKT. NO.	TRIP AMPS	NO. POLES	WIRE MM2	GND MM2	CONDUIT MM	CONNECTED	REMARKS
1	225	3	150	50	100	125.94	PANEL LPF, HEADQUARTERS BUILDING
2	60	3				30.00	PANEL "A" FUTURE
3	60	3				30.00	PANEL "B", FUTURE
4	60	3	16	6	38	13.60	PANEL LP-"D": GUARD SHACK #1, PRIMARY ECP, GUARD SHACK #2, GUARD TOWER #2
5	40	1	25	16	38	5.0	PANEL LC-"E1": GUARD TOWER #1
6	40	1	10	6	25	5.0	PANEL LC-"E3": GUARD TOWER #3
7	40	1	16	6	32	5.0	PANEL LC-"E4": GUARD TOWER #4
8	20	1	16	6	32	3.5	FUEL PUMPS
9	60	3	16	6	38	9.94	WELL PUMP
10	75	3	70	70	50		LOAD BANK
11	20	1	6	4	25	0.51	SUNSHADE LIGHTING AND POWER
12	60	3					SPARE
13	60	3					SPARE
14	60	3					SPARE
15	60	3					SPARE
TOTAL CONNECTED LOAD						228.49 KVA	

CONN. LOAD: 228.49 KVA 80 % DEMAND = EST DEM LOAD 182.79 KVA
SUPPLIED FROM: GENERATORS

UNLESS OTHERWISE NOTED, LINEAR DIMENSIONS SHOWN ARE IN MILLIMETERS.

SYMBOL	REVISIONS	DESCRIPTION	DATE	APP
			19/03/2007	

DESIGNED BY: MM
DATE: 19 January 2009
DWN BY: MM
SUBMITTED BY:
CHK BY: SE
FILE NO.: AF0701 ---ES02D1

US Army Corps of Engineers
Transatlantic Programs Center

AFGHAN NATIONAL POLICE UP DISTRICT HEADQUARTERS (2 STORY)
AFGHANISTAN
SITE DESIGN
ONE LINE DIAGRAM

SHEET REFERENCE NUMBER:
XE-2

$DATE$
$FILE$

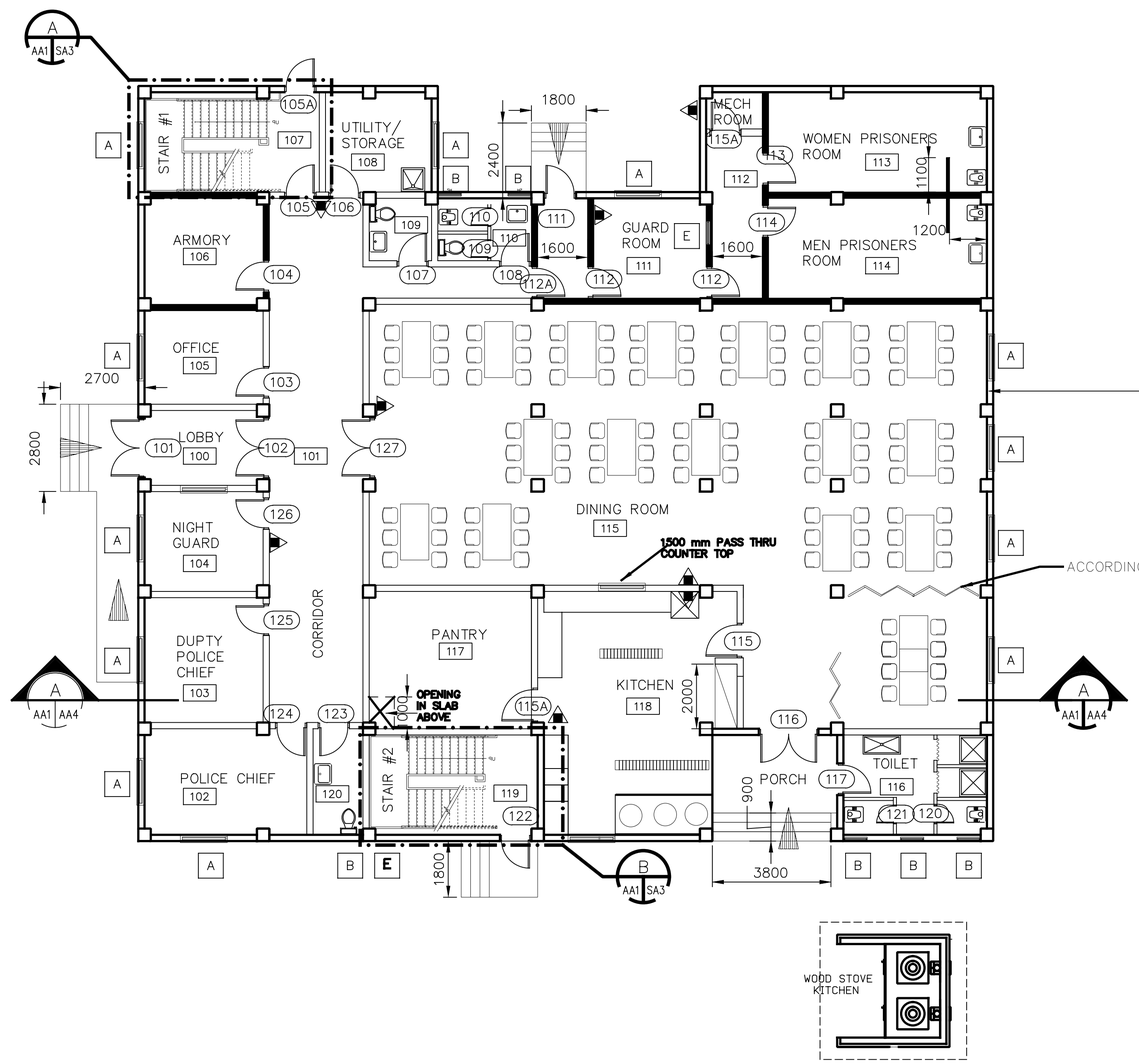

ACCORDING PARTITION

CMU WALL WITH VERTICAL REINFORCEMENT
200mm O.C., GROUT SOLID

FLOOR PLAN NOTES:

1. ALL INTERIOR WALLS ARE 200 CMU EXTENDING TO THE ROOF SLAB UNLESS NOTED OTHERWISE.

PROVIDE PORTABLE FIRE EXTINGUISHERS, ABC DRY CHEMICAL 4A:60B:C

2. ALL SHOWER WILL BE PROVIDED WITH SHOWER CURTAIN SEE PARAGRAPH 4.11.3 OF SECTION 01015.
3. ALL EXTERIOR WALL SHALL BE FULLY REINFORCED GROUT SOLID, SEE SA–2 FOR WALL SECTION DETAIL.
4. SEE SA–4 FOR WINDOW DETAILS
5. ALL CMU WALLS SHALL BE FULLY GROUTED
6. ALL CORRIDOR DOORS ARE 20 MINUTE FIRE RATED
7. ALL INTERIOR WALLS ARE 200 mm CMU; ALL TOILET STALL WALLS ARE 100 mm CMU.

1 0 1 2 3 4 5 6 7 8 9
1:100

SYMBOL	DESCRIPTION	DATE	APP
	STAIR DETAILS	19/03/2007	

DESIGNED BY: S. Hanna
DATE: 19 January 2009
DWN BY: S. Hanna
SUBMITTED BY: PHILIP L. DINELLO, SENIOR PLT FACILITIES DEV.
CHK BY:
FILE NO.: AF0701 A–AR01PN

US Army Corps of Engineers
Transatlantic Programs Center

AFGHAN NATIONAL POLICE
UP DISTRICT HEADQUARTERS
(2 STORY)
AFGHANISTAN
POLICE HEADQUARTERS
FIRST FLOOR PLAN

SHEET REFERENCE NUMBER:
A
A–1

$DATE$
$FILE$

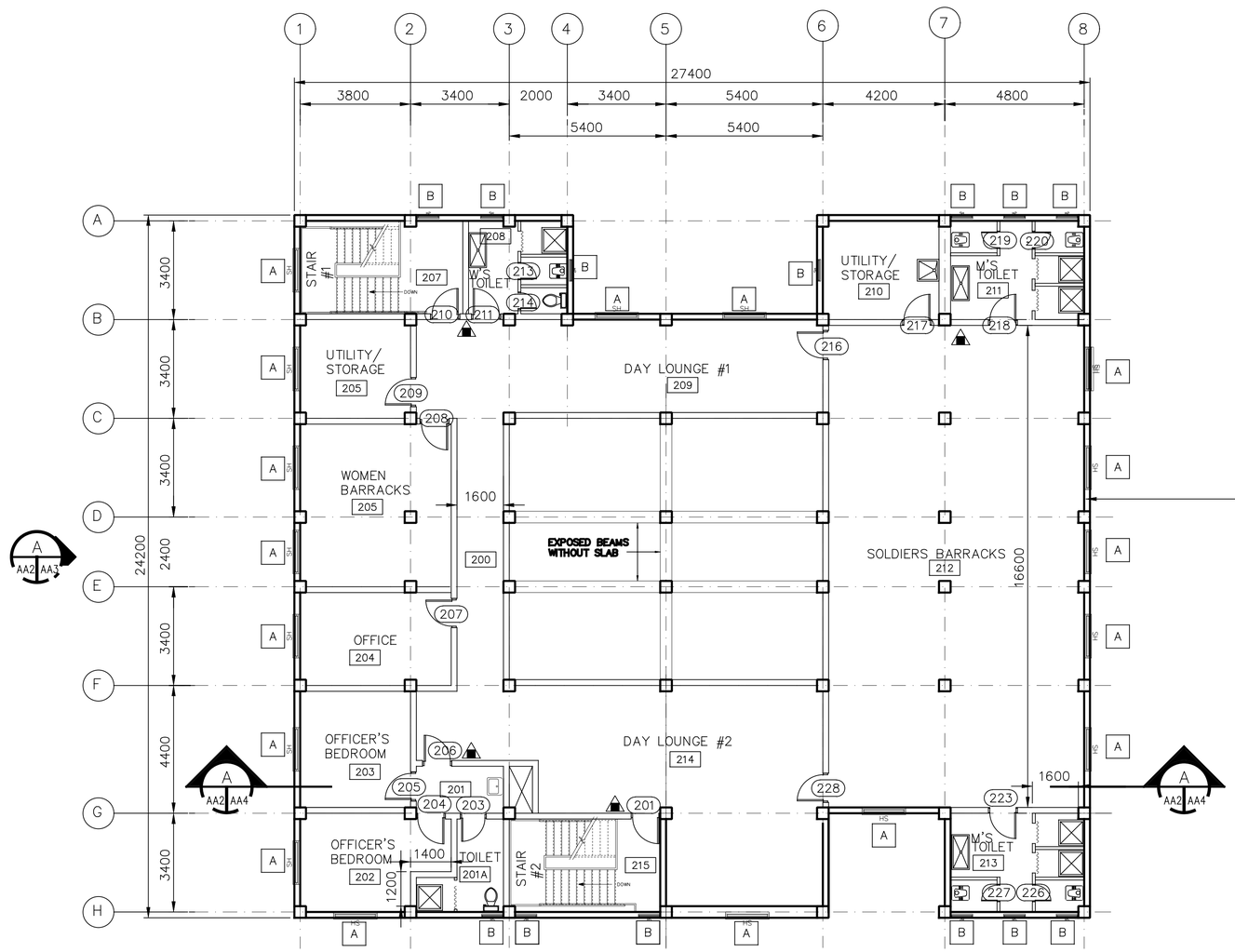

FLOOR PLAN
SCALE=1 : 100

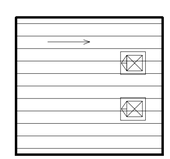

FLOOR PLAN NOTES:

1. ALL INTERIOR WALLS ARE 200 CMU EXTENDING TO THE ROOF SLAB UNLESS NOTED OTHERWISE.

PROVIDE PORTABLE FIRE EXTINGUISHERS, ABC DRY CHEMICAL 4A:60B:C

2. ALL SHOWER WILL BE PROVIDED WITH SHOWER CURTAIN SEE PARAGRAPH 4.11.3 OF SECTION 01015.

3. ALL EXTERIOR WALL SHALL BE FULLY REINFORCED GROUT SOLID CMU WAL, SEE SA-2 FOR WALL SECTION DETAIL.

4. SEE SA-4 FOR WINDOW DETAILS

5. ALL CMU SHALL BE FULLY GROUTED

1 0 1 2 3 4 5 6 7 8 9
1:100

UNLESS OTHERWISE NOTED, LINEAR DIMENSIONS SHOWN ARE IN MILLIMETERS.

SYMBOL	DESCRIPTION	DATE	APP
*	STAIR DETAILS	19/03/2007	

DESIGNED BY: S.Hanna
DATE: 19 January 2009
DWN BY: S. Hanna
SUBMITTED BY: PHILIP L. DINELLO, CHIEF, POT FACILITIES DEV.
CHK BY: CHECK_BY
FILE NO.: AF0701 A-AR02PN

US Army Corps of Engineers
Transatlantic Programs Center

AFGHAN NATIONAL POLICE
UP DISTRICT HEADQUARTERS
(2 STORY)
AFGHANISTAN
POLICE HEADQUARTERS
SECOND FLOOR PLAN

SHEET REFERENCE NUMBER:
A
A-2

$DATE$
$FILE$

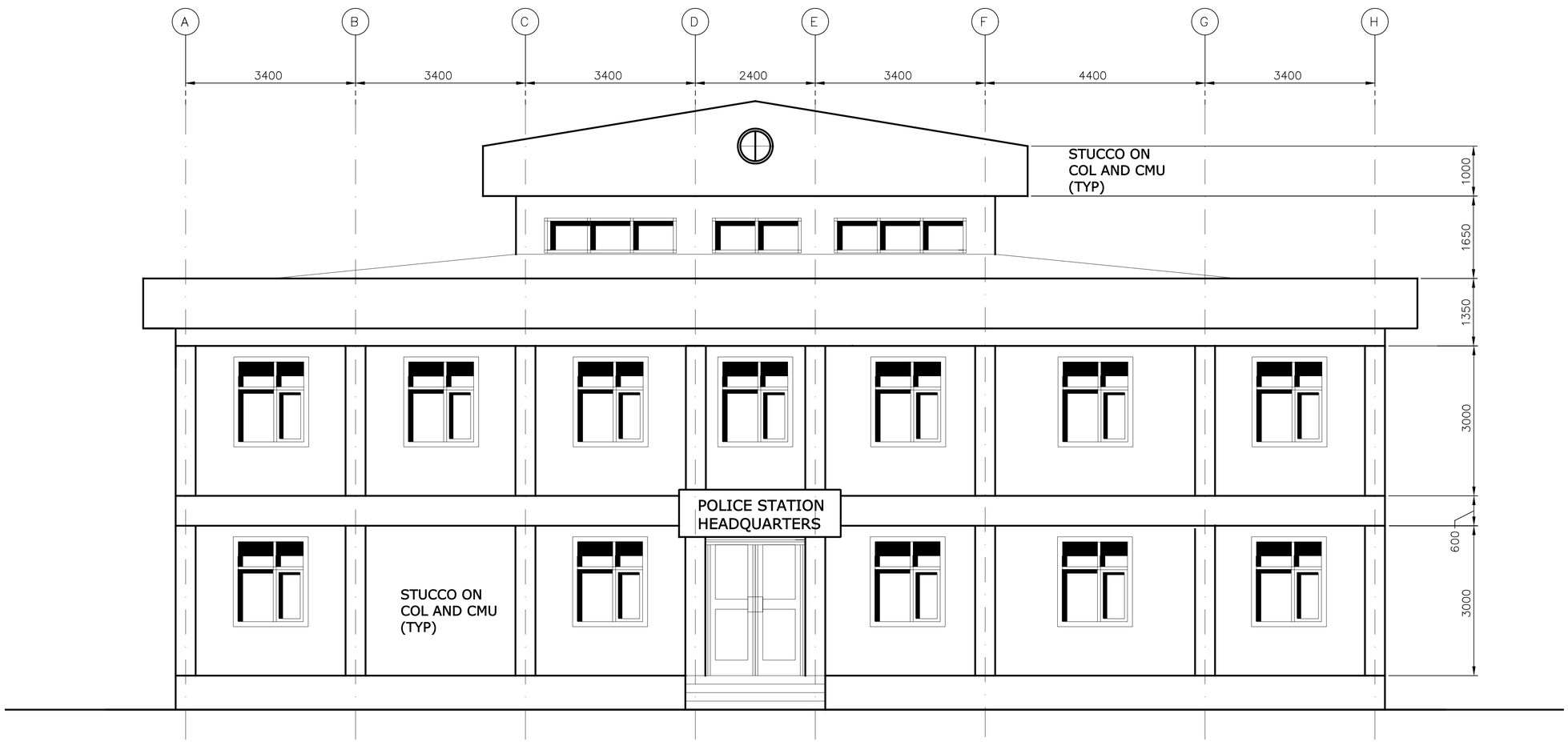

ELEVATION
SCALE= 1 : 50

A
A1 A3

1 0 1 2 3 4
1:50

UNLESS OTHERWISE NOTED, LINEAR DIMENSIONS SHOWN ARE IN MILLIMETERS.

SYMBOL	DESCRIPTION	DATE	APP
*	ELEVATION	19/03/2007	

DESIGNED BY: S. Hanna
DATE: 19 January 2009
DWN BY: S. Hanna
SUBMITTED BY: PHILIP L. DINELLO
Center PDT PROJECTS DEV.
CHK BY: CHECK_BY
FILE NO.: AF0701 A-AR03EL

US Army Corps of Engineers
Transatlantic Programs Center

AFGHAN NATIONAL POLICE
UP DISTRICT HEADQUARTERS
(2 STORY)
AFGHANISTAN
POLICE HEADQUARTERS
BUILDING ELEVATION

SHEET REFERENCE NUMBER:
A
A-3

$DATE$
$FILE$

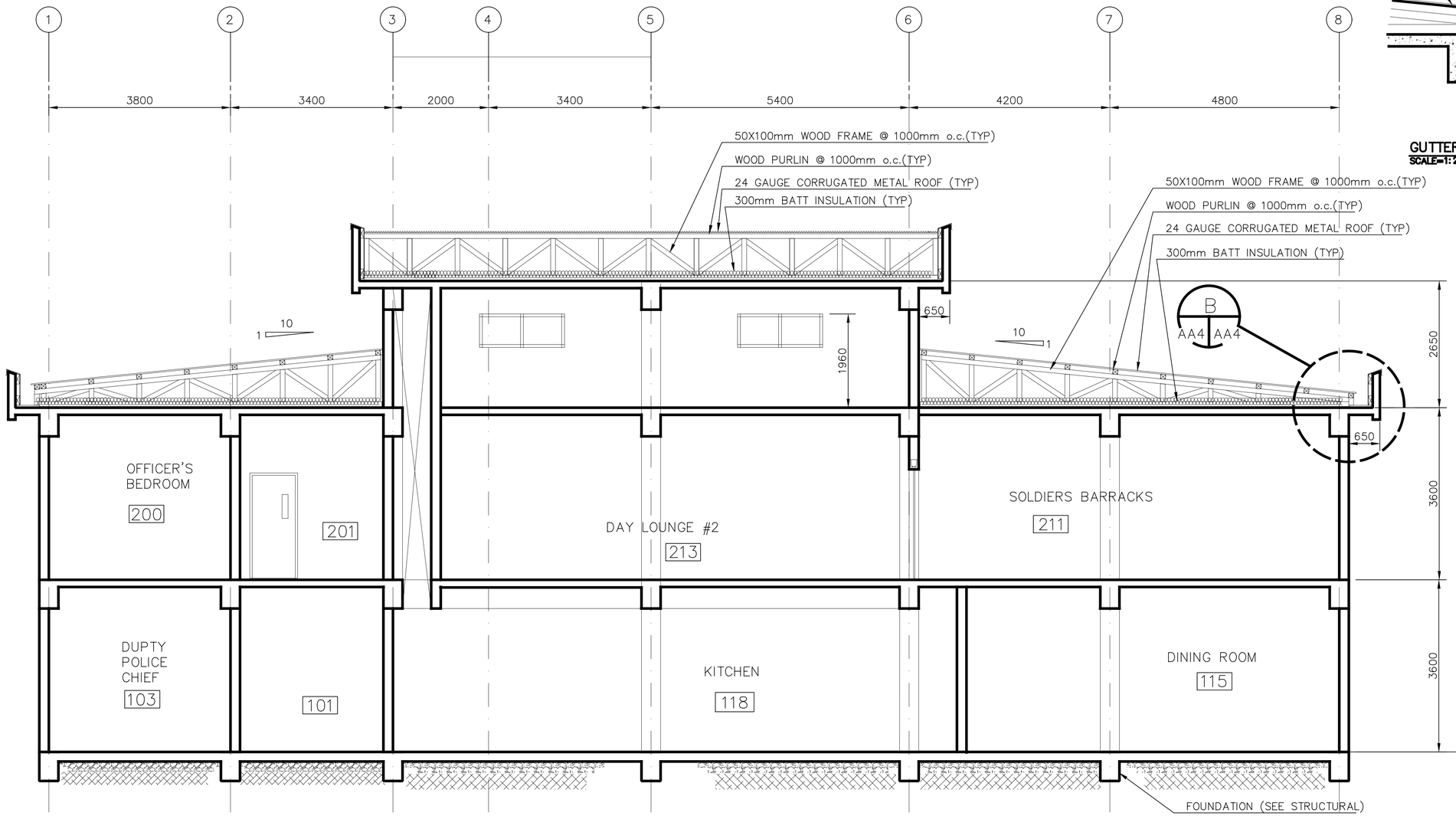

BUILDING SECTION (A / A1 A6)
SCALE=1 = 50

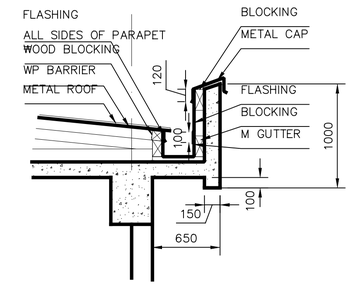

GUTTER DETAIL (B / AA4 AA4)
SCALE=1:25

1 0 1 2 3 4
1:50

UNLESS OTHERWISE NOTED, LINEAR DIMENSIONS SHOWN ARE IN MILLIMETERS.

SYMBOL	DESCRIPTION	DATE	APP
*	DETAILS	19/03/2007	

DESIGNED BY: S. Hanna
DATE: 19 January 2009
DWN BY: S. Hanna
SUBMITTED BY: PHILIP L. DINELLO, Center PDT Facilities Dev.
CHK BY: CHECK_BY
FILE NO.: AF0701 A-AROASE

US Army Corps of Engineers
Transatlantic Programs Center

AFGHAN NATIONAL POLICE
UP DISTRICT HEADQUARTERS
(2 STORY)
AFGHANISTAN
POLICE HEADQUARTERS
BUILDING SECTION

SHEET REFERENCE NUMBER:
A
A-4

$DATE$
$FILE$

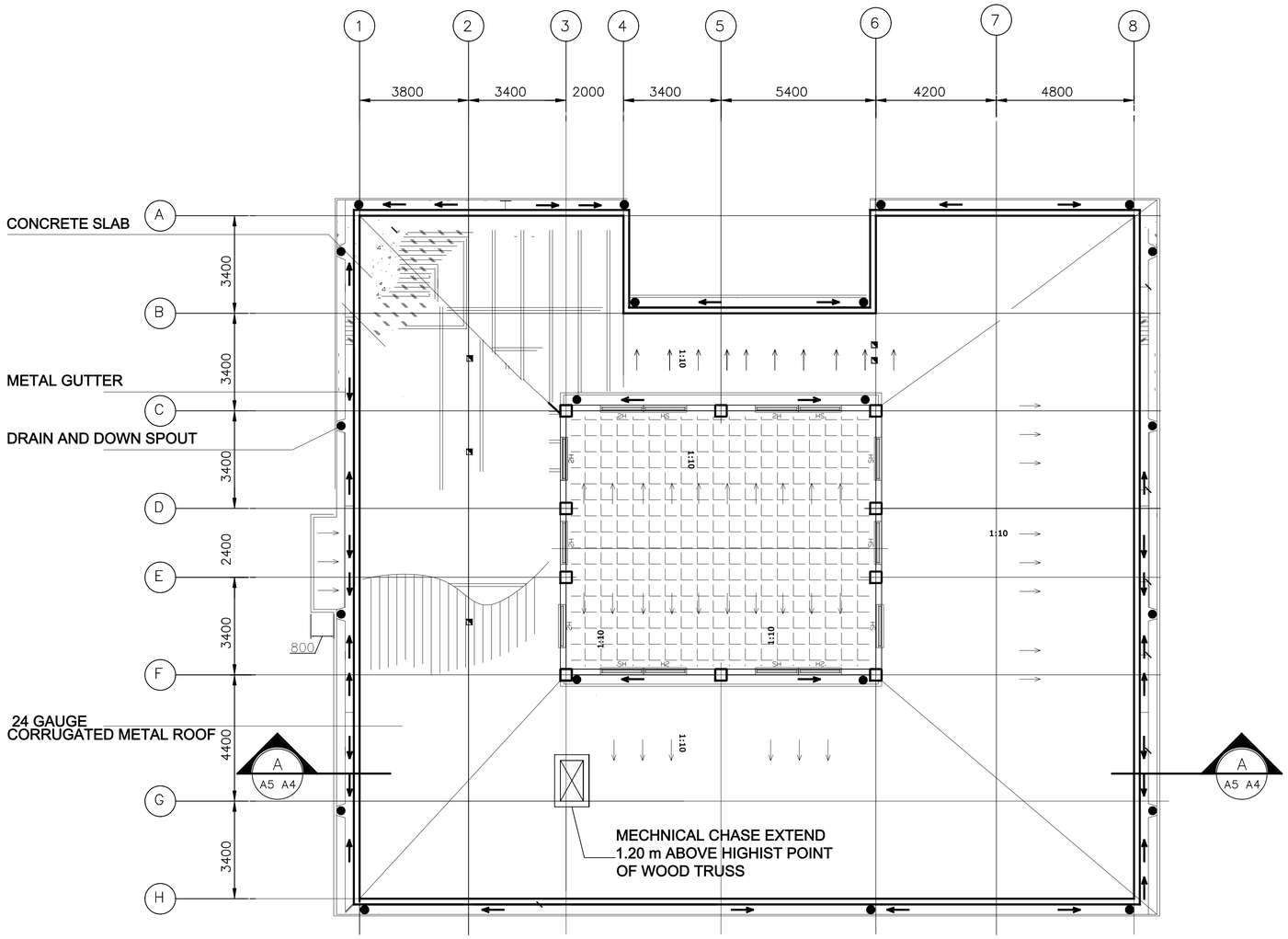

ROOF PLAN

SCALE = 1 : 100

UNLESS OTHERWISE NOTED, LINEAR DIMENSIONS SHOWN ARE IN MILLIMETERS.

SYMBOL	DESCRIPTION	DATE	APP
REVISIONS		19/03/2007	

DESIGNED BY: S. Hanna
DATE: 19 January 2009
DWN BY: S. Hanna
SUBMITTED BY: PHILIP L. DINELLO, CHIEF, POT FACILITIES DEV.
CHK BY: CHECK_BY
FILE NO.: AF0701 A-AROSPN

US Army Corps of Engineers
Transatlantic Programs Center

AFGHAN NATIONAL POLICE
UP DISTRICT HEADQUARTERS
(2 STORY)
AFGHANISTAN
POLICE HEADQUARTERS
ROOF PLAN

SHEET REFERENCE NUMBER:
A
A-5

$DATE$
$$FILE$

DOOR SCHEDULE

NO.	LOCATION	DOOR TYPE	DOOR MAT'L	DOOR WIDTH	DOOR HEIGHT	DOOR THICK	FRAME HEAD	FRAME JAMB	FRAME SILL	FRAME MAT'L	FIRE LABEL	HDW SET	REMARKS
FIRST FLOOR													XXXXXXXXXXX
101	LOBBY	G (PR)	WOOD	1800	**2150**	45	**H-1**	**J-1**	**S-1**	WOOD	20 MIN.	2	**6**
102	COORIDOR	G (PR)	WOOD	1800			H-2	J-2	S-2	WOOD	20 MIN.	8	**5, 6**
103	OFFICE	N	WOOD	900			H-2	J-2	S-2	WOOD	20 MIN.	**4**	
104	ARMORY	V	STEEL	900			H-2	J-2	S-2	STEEL		**11**	**5**
105	STAIR #1	F	STEEL	900			H-2	J-2	S-2	STEEL	1-HOUR	**1**	**5**
105A	STAIR #1	F	WOOD	900			H-2	J-2	S-2	WOOD		**1**	**6**
106	UTILITY/STORAGE	F		900			H-2	J-2	S-2		45 MIN.	**6**	**5**
107	WOMEN'S TOILET	F		900			H-2	J-2	S-2		20 MIN.	**5**	**5**
108	MEN'S TOILET	F		900			H-2	J-2	S-2		20 MIN.	**5**	**5**
109	TOILET	F		600			H-2	J-2	S-2			**3**	
110	TOILET	F		600			H-2	J-2	S-2			**3**	
111	ENTRANCE	G		900			**H-1**	**J-1**	**S-1**			**1**	
112	TO PRISONERS CELL	N		900			H-2	J-2	S-2		20 MIN.	**4**	
112A	CORRIDOR	N		900			H-2	J-2	S-2		20 MIN.	**4**	
113	W'S PRISONERS CELL	F (C)	STEEL	900			H-2	J-2	S-2	STEEL		11	
114	M'S PRISONER CELL	F (C)	STEEL	900			H-2	J-2	S-2	STEEL		11	
115	KITCHEN	N	WOOD	1000			H-2	J-2	S-2	WOOD	90 MIN.	9	
115A	PANTRY/MECH RM	N		1000			H-2	J-2	S-2		45 MIN.	6	**5**
116	ENTRANCE	G (PR)		1800			**H-1**	**J-1**	**S-1**			2	**6**
117	MEN'S TOILET	F		900			**H-1**	**J-1**	**S-1**			**10**	
NOT USED	SHOWER	OPENING		700								---	
NOT USED	SHOWER	OPENING		700								---	
120	TOILET	F		600			H-2	J-2	S-2			**3**	
121	TOILET	F		600			H-2	J-2	S-2			**3**	
122	STAIR #2	F		900			**H-1**	**J-1**	**S-1**			**1**	
123	OFFICER'S TOILET	F		900			H-2	J-2	S-2			**5**	
124	POLICE CHIEF OFF	N		900			H-2	J-2	S-2		20 MIN.	**4**	
125	DUPTY CHIEF OFF	N		900			H-2	J-2	S-2		20 MIN.	**4**	
126	NIGHT GUARD OFF	N		900			H-2	J-2	S-2		20 MIN.	**4**	
127	DINING ROOM	G (PR)		1800			H-2	J-2	S-2		90 MIN.	**2**	**6**
SECOND FLOOR													
201	STAIR #2	F	STEEL	900			H-2	J-2	S-2	STEEL	1-HOUR	**1**	**5**
NOT USED	NOT USED	NOT USED		NOT USED								---	
203	OFFICER'S TOILET	F	WOOD	900			H-2	J-2	S-2	WOOD		**5**	**5**
204	OFFICER'S BD. RM	F		900			H-2	J-2	S-2			**7**	
205	OFFICER'S BD. RM	F		900			H-2	J-2	S-2			**7**	
206	OFFICER'S SUITE	N		900			H-2	J-2	S-2		20 MIN.	**7**	
207	OFFICE	N		900			H-2	J-2	S-2		20 MIN.	**4**	
208	WOMEN'S BARRECKS	F		900			H-2	J-2	S-2		20 MIN.	**7**	
209	UTILITY/STORAGE	N		900			H-2	J-2	S-2		45 MIN.	**6**	
210	STAIR #1	F	STEEL	900			H-2	J-2	S-2	STEEL	1-HOUR	**1**	**5**
211	WOMEN'S TOILET	F	WOOD	900			H-2	J-2	S-2	WOOD	20 MIN.	**5**	**5**
NOT USED	SHOWER	OPENING		700								---	
213	TOILET	F		600			H-2	J-2	S-2			**3**	
214	TOILET	F		600			H-2	J-2	S-2			**3**	
NOT USED	NOT USED	NOT USED										---	
216	DAY LOUNGE #1	N		900			H-2	J-2	S-2		20 MIN.	**7**	
217	UTILITY/STORAGE	N		900			H-2	J-2	S-2		45 MIN.	**6**	
218	MEN'S TOILET	F		900			H-2	J-2	S-2			**5**	**5**
219	TOILET	F		600			H-2	J-2	S-2			**3**	
220	TOILET	F		600			H-2	J-2	S-2			**3**	
NOT USED	SHOWER	OPENING		700								---	
NOT USED	SHOWER	OPENING		700								---	
223	MEN'S TOILET	F		900			H-2	J-2	S-2			**5**	**5**
NOT USED	SHOWER	OPENING		700								---	
NOT USED	SHOWER	OPENING		700								---	
226	TOILET	F		600			H-2	J-2	S-2			**3**	
227	TOILET	F		600			H-2	J-2	S-2			**3**	
228	DAY LOUNGE #2	N		900			H-2	J-2	S-2			**7**	

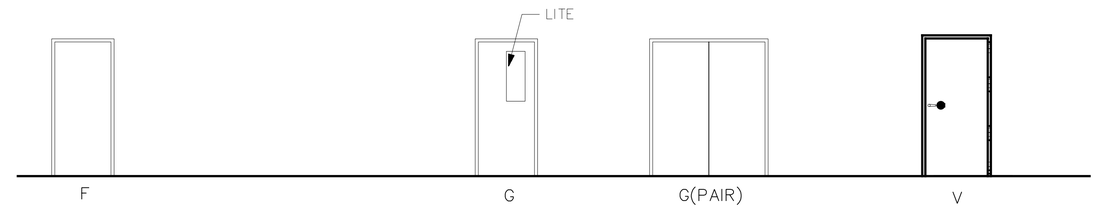

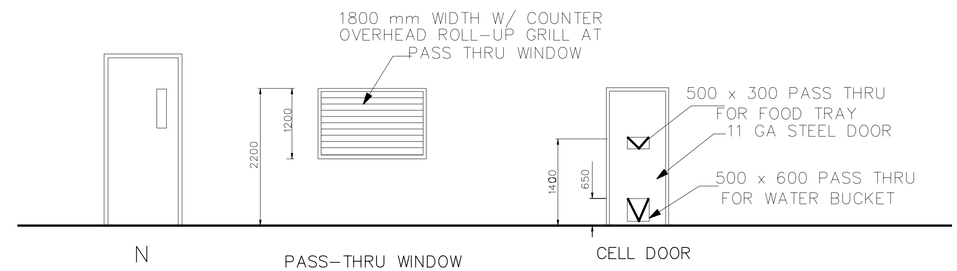

DOOR NOTES:

1. FOR HEAD, JAMB AND SILL DETAILS, SEE SHEET SA-2.
2. SEE DOOR SCHEDULE FOR DOOR AND FRAME SIZES.

TYPICAL DOOR TYPES

(NOT TO SCALE)

DOOR SCHEDULE NOTES:

1. CELL DOOR SHALL BE 11 GA STEEL DOOR WITH PASS-THRU WINDOWS AS SHOWN ON SA-2. PROVIDE HINGED DOORS TO THESE PASS-THRU WINDOWS WITH PADLOCKS TO THE OUTSIDE.
2. PROVIDE 600 X 400 LOUVERS IN DOOR TYPE (L)
3. UNDERCUT ALL DOORS BY 12 mm.
4. SEE SPECS FOR ARMORY DOOR
5. DOORS TO DINING ROOM REQUIRE 90 MINUTE FIRE RATING NO GLAZING AND PANIC HARDWARE
6. NO DOOR GLAZING SHALL EXCEED 0.065 SM IN SIZE AND AND ALL DOOR GLAZING MUST BE FIRE RATED

UNLESS OTHERWISE NOTED, LINEAR DIMENSIONS SHOWN ARE IN MILLIMETERS.

SYMBOL	DESCRIPTION	DATE	APP
REVISIONS		19/03/2007	

DESIGNED BY: S. Hanna
DATE: 19 January 2009
DWN BY: S. Hanna
SUBMITTED BY: PHILIP L. DINELLO, Center PDT Facilities Dev
CHK BY: CHECK_BY
FILE NO.: AF0701 A-AR08SC

US Army Corps of Engineers
Transatlantic Programs Center

AFGHAN NATIONAL POLICE
UP DISTRICT HEADQUARTERS
(2 STORY)
AFGHANISTAN
POLICE HEADQUARTERS
DOOR SCHEDULE

SHEET REFERENCE NUMBER:
A
A-6

$DATE$
$FILE$

ROOM FINISH SCHEDULE

ROOM NO.	ROOM NAME	FLOOR MAT'L.	FLOOR COLOR	BASE MAT'L.	BASE COLOR	WALLS MAT'L.	WALLS COLOR	CEILING MAT'L.	CEILING COLOR	CEILING HEIGHT	REMARKS
	FIRST FLOOR										XXXXXXXXXX
100	LOBBY	F2	2	B2	11	W2	21	C2	31	3.4 m	
101	COORIDOR	F2	2	B2	11	W2	21	C2			
102	POLICE CHIEF OFF	F2	2	B2	11	W2	21	C2			
103	DUPTY CHIEF OFF	F2	2	B2	11	W2	21	C2			
104	NIGHT GUARD OFF	F2	2	B2	11	W2	21	C2			
105	OFFICE	F2	2	B2	11	W2	21	C2			
106	ARMORY	F2	2	B2	11	W2	21	C2			
107	STAIR #1	F1	4	B4	13	W2	20	C2			
108	UTILITY/STORAGE	F2	2	B2	11	W2	21	C2			
109	WOMEN'S TOILET	F3	3	B3	12	W3	23	C2			
110	MEN'S TOILET	F3	3	B3	12	W3	23	C2			
111	PRISONERS GUARD ROOM	F2	2	B2	11	W2	21	C2			
112	PRISONERS GUARD ROOM	F2	2	B2	11	W2	21	C2			
113	W'S PRISONERS CELL	F2	2	B2	11	W2	21	C2			
114	M'S PRISONER CELL	F2	2	B2	11	W2	21	C2			
115	DINING ROOM	F2	2	B2	11	W2	21	C2			
116	MEN'S TOILET	F3	3	B3	12	W3	23	C2			
117	PANTRY	F2	2	B2	11	W2	21	C2			
118	KITCHEN	F2	2	B2	11	W2	21	C2			
119	STAIR #2	F1	4	B4	13	W2	20	C2			
120	OFFICER'S TOILET	F3	3	B3	12	W3	23	C2			
	SECOND FLOOR										
200	COORIDOR	F2	2	B2	11	W2	21	C2			
201	OFFICER'S LOBBY	F2	2	B2	11	W2	21	C2			
201A	OFFICER'S TOILET	F3	3	B3	12	W3	23	C2			
202	OFFICER'S BEDROOM	F2	2	B2	11	W2	21	C2			
203	OFFICER'S BEDROOM	F2	2	B2	11	W2	21	C2			
204	OFFICE	F2	2	B2	11	W2	21	C2			
205	WOMEN'S BARRECKS	F2	2	B2	11	W2	21	C2			
206	UTILITY/STORAGE	F2	2	B2	11	W2	21	C2			
207	STAIR #1	F1	4	B4	13	W2	20	C2			
208	WOMEN'S TOILET	F3	3	B3	12	W3	23	C2			
209	DAY LOUNGE #1	F2	2	B2	11	W2	21	C2			
210	UTILITY/STORAGE	F2	2	B2	11	W2	21	C2			
211	MEN'S TOILET	F3	3	B3	12	W3	23	C2			
212	SOLDER,S BARRECKS	F2	2	B2	11	W2	21	C2			
213	MEN'S TOILET	F3	3	B3	12	W3	23	C2			
214	DAY LOUNGE #2	F2	2	B2	11	W2	21	C2			
215	STAIR #2	F1	4	B4	13	W2	20	C2			

ROOM FINISH SCHEDULE NOTES:

1. ALL NEW INTERIOR AND EXTERIOR SURFACES NOT PROVIDED WITH A COLOR FACTORY FINISH SHALL RECEIVE PAINT IN ACCORDANCE AS DIRECTED BY THE CONTRACTING OFFICER.
2. WHERE SCHEDULED, PLASTER OR TILE WALL FINISH SHALL EXTEND TO UNDERSIDE OF CEILING.
3. ALL WALL PENETRATIONS SHALL BE SEALED TO PROVIDE A NEAT APPEARANCE. PENETRATIONS OF EXTERIOR WALLS SHALL BE SEALED TO BE WATER-TIGHT. SEALANT SHALL BE APPLIED IN ACCORDANCE WITH SPECIFICATION SECTION 07920.
4. SEALANTS SHALL MATCH THE COLOR OF ADJACENT SURFACES

ROOM FINISH SCHEDULE LEGEND

FLOOR TYPE

F1 SEALED CONCRETE
F2 TERRAZZO TILE
F3 CERAMIC TILE
F4 RUBBER

FLOOR COLOR

1 SEALED CONCRETE – NATURAL FINISH
2 TERRAZZO TILE – NAT'L TERRAZZO & MOSAIC ASSN, INC, NO. S-330
3 CERAMIC TILE – AMERICAN OLEAN, C-11, ALABASTER
4 DARK GRAY

BASE TYPE

B2 TERRAZZO
B3 CERAMIC
B4 100 m RUBBER
B5 NO BASE

BASE COLOR

11 TERRAZZO TILE – NAT'L TERRAZZO & MOSAIC ASSN, INC, NO. S-330
12 CERAMIC TILE – AMERICAN OLEAN, D-12, ALMOND
13 DARK GRAY

WALL TYPE

W1 PAINTED CMU
W2 PAINTED PLASTER
W3 CERAMIC TILE

WALL COLOR

20 PAINTED CMU –HEMPEL, 1005-Y50R-25400, LIGHT BEIGE
21 PAINTED PLASTER–HEMPEL, 0502-Y-15420, OFF WHITE
22 METAL PANEL – HEMPEL, 0502-Y-15420, OFF WHITE
23 CERAMIC TILE –AMERICAN OLEAN, D-12, ALMOND

CEILING TYPE

C1 PAINTED EXPOSED STRUCTURE
C2 PAINTED PLASTER

CEILING COLOR

30 PAINTED EXPOSED STRUCTURE – HEMPEL, 0502-Y-15420, OFF WHITE
31 PAINTED PLASTER HEMPEL, 0502-Y-15420, OFF WHITE

NOTE: PATTERN AND COLOR ARE SHOWN FOR REFERENCE ONLY, OTHER MANUFACTURER'S SIMILAR PATTERN AND COLOR MAY BE USED AS APPROVED BY THE CONTRACTING OFFICER.

EXTERIOR FINISH SCHEDULE

ROOF

METAL ROOF:
SHERWIN WILLIAMS #SW2445, CREAMY WHITE

WALL

INTEGRALLY COLORED SPLIT-FACED CMU
SHERWIN WILLIAMS #SW2036, PELICAN TAN

EXTERNAL INSULATION FINISH SYSTEM (EIFS):
SHERWIN WILLIAMS #SW2036, PELICAN TAN

WINDOW AND DOOR FRAMES

WOOD FRAMES:
SHERWIN WILLIAMS #SW2042, TERRACE BROWN

HOLLOW METAL FRAMES:
SHERWIN WILLIAMS #SW2294, CARRIAGE DOOR

DOORS:

SHERWIN WILLIAMS #SW2036, PELICAN TAN

HANDRAILS & GUARD RAILS: SHERWIN WILLIAMS #SW2042, TERRACE BROWN

CONCRETE FRAMES, BEAMS, FRAMES ETC

SHERWIN WILLIAMS #SW2036, PELICAN TAN

DOWNSPOUTS, GUTTERS, LOUVERS, FLASHING AND SEALANTS SHALL MATCH ADJACENT WALL COLOR.

SOFFITS:

METAL SOFFIT PANELS: SHERWIN WILLIAMS, #SW2205, TOWNHALL TAN

NOTES:

1. PATTERN, COLOR AND TEXTURE ARE SHOWN FOR REFERENCE ONLY. OTHER MANUFACTURER'S SIMILAR PATTERN, COLOR AND TEXTURE MAY BE USED AS APPROVED BY THE CONTRACTING OFFICER.
2. ALL INTERIOR AND EXTERIOR DOORS, WINDOWS AND FRAMES SHALL HAVE A SEMI-GLOSS FINISH.
3. TOILETS AND JANITOR CLOSET WALLS AND PLASTER CEILINGS, WHERE THEY OCCUR SHALL HAVE A SEMI-GLOSS FINISH.

SYMBOL	DESCRIPTION	DATE	APP
REVISIONS		19/03/2007	

DESIGNED BY: S. Hanna
DATE: 19 January 2009
DWN BY: S. Hanna
SUBMITTED BY: PHILIP L. DINELLO, CHIEF, POT FACILITIES DEV.
CHK BY: CHECK_BY
FILE NO.: AF0701 A-AR07SC

US Army Corps of Engineers
Transatlantic Programs Center

AFGHAN NATIONAL POLICE UP DISTRICT HEADQUARTERS (2 STORY)
AFGHANISTAN
POLICE HEADQUARTERS
FINISH SCHEDULE

SHEET REFERENCE NUMBER:
A
A-7

$DATE$
$FILE$

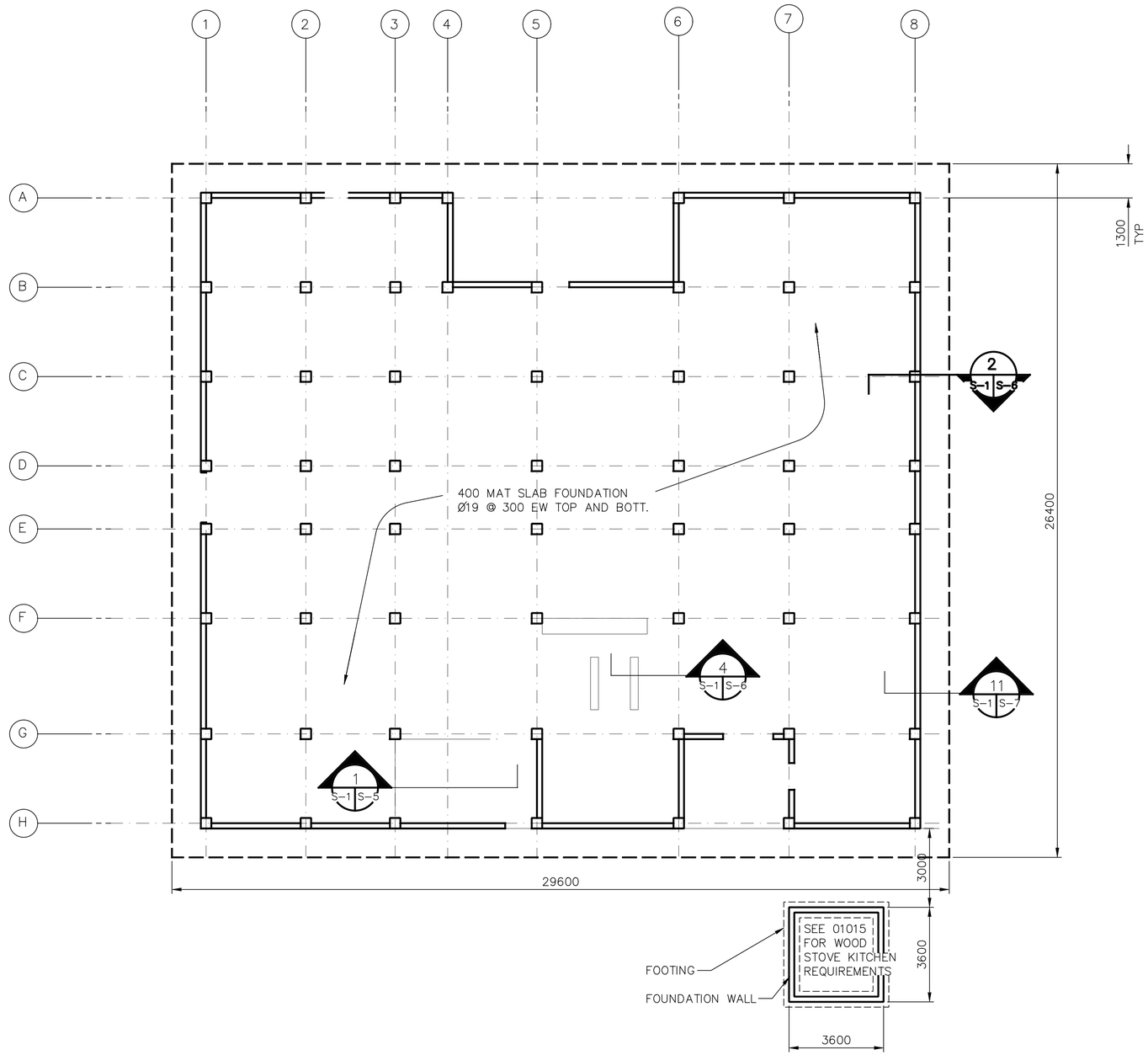

FOUNDATION PLAN

SCALE= 1:100

1. DESIGN LOADS (SERVICE)

   LIVE LOADS:

   ROOF: 1.0 KPA (20 PSF)
   OTHERS: 4.8 KPA (100 PSF)
   8.9 KN (2.0 K) CONCENTRATED LOAD

   WIND LOADS PER IBC–2003

   USING A "3–SECOND" WIND VELOCITY OF 125 KPH (78 MPH), EXPOSURE C AND IMPORTANCE FACTOR I=1.0

   EARTHQUAKE LOADS PER IBC–2003:

   USING A SEISMICITY: Ss=1.65g AND S_1=0.75g

2. MATERIALS:

   CONCRETE: 28 MPa (4 KSI)
   CYLINDER STRENGTH AT 28 DAYS

   REINFORCING: ASTM A615 GRADE 60 (60 KSI)

   WELDED WIRE FABRIC: ASTM A185

   CONCRETE MASONRY UNITS:
   ASTM C90, TYPE I (NORMAL WEIGHT, MOISTURE CONTROLLED) MORTAR, ASTM C270, TYPE S
   GROUT, ASTM C 476
   JOINT REINFORCEMENT, LADDER TYPE

3. WORK THESE STRUCTURAL DRAWINGS WITH THE STANDARD–DETAILS DRAWINGS.

4. A RELATIVE (DATUM) FINISH FLOOR ELEVATION EQUAL TO 100.00 M. IS USED AS REFERENCE ELEVATION FOR ALL STRUCTURAL DRAWINGS. REFER TO CIVIL DRAWINGS FOR ACTUAL FINISH ELEVATIONS.

5. NO CONTROL JOINTS IN THE MAT SLAB..

6. FOUNDATIONS ARE DESIGNED USING AN ALLOWABLE BEARING PRESSURE OF 0.75 KG/SQ. CM (1500 PSF), AND BOTTOM OF FOOTINGS ARE PLACED AS SHOWN ON DRAWINGS. GEOTECHNICAL INVESTIGATION SHALL CONFIRM BEARING CAPACITY TO BE NO LESS THAN 0.75 KG/SQ CM. IF GEOTECHNICAL INVESTIGATION SHOWS LESS THAN 0.75 KG/SQ CM THE CONTRACTOR SHALL REDESIGN FOOTINGS BASED ON THE GEOTECHNICAL INVESTIGATION. SEE SPECIFICAITON 01015 PARAGRAPH, GEOTECHNICAL, FOUNDATION AND SURVEY.

7. MAT SLAB FOUNDATION IS OFFSET FROM OUTSIDE COLUMN LINES 1.3 METERS.

8. ALL COLUMNS ARE C–1 AS SHOWN ON S–6 COLUMN TYPES.

1 0 1 2 3 4 5 6 7 8 9
1:100
UNLESS OTHERWISE NOTED, LINEAR DIMENSIONS SHOWN ARE IN MILLIMETERS.

SYMBOL	REVISIONS DESCRIPTION	DATE	APP
*		19/03/2007	

DESIGNED BY: TCP
DWN BY: TCP
CHK BY: KGO
DATE: 19 January 2009
SUBMITTED BY: PHILIP L. DINELLO, Chief, PCX Facilities Dev.
FILE NO.: AF0701 A–S001PN

US Army Corps of Engineers
Transatlantic Programs Center

AFGHAN NATIONAL POLICE
UP DISTRICT HEADQUARTERS
(2 STORY)
AFGHANISTAN
POLICE HEADQUARTERS
FOUNDATION PLAN

SHEET REFERENCE NUMBER:
A
S–1

$DATE$
$FILE$

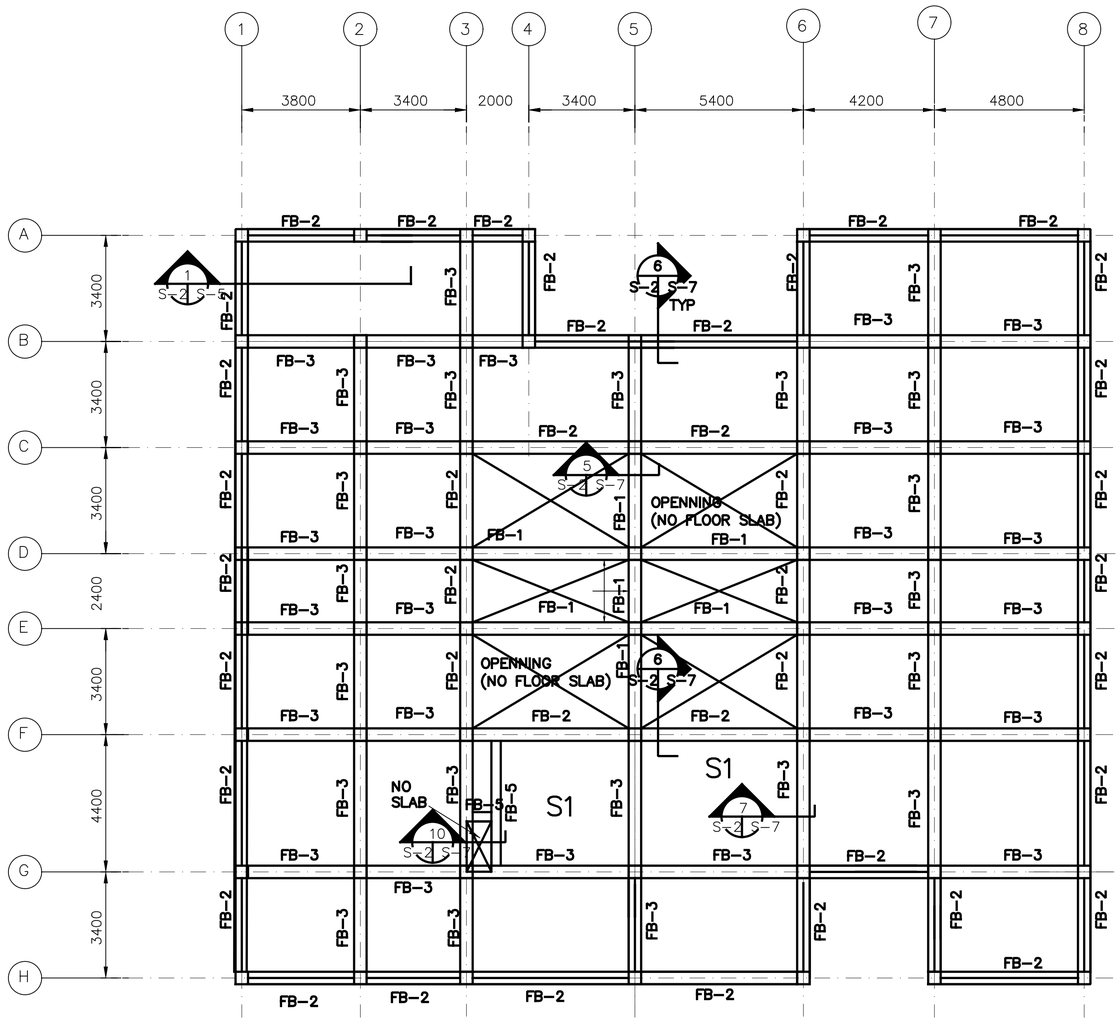

SECOND FLOOR STRUCTURAL PLAN

SCALE= 1:100

NOTES:

1. ALL COLUMNS ON THE SECOND FLOOR ARE C2 AS SHOWN ON S-6 COLUMN TYPES.
2. LIVE LOAD: 100PSF
3. ALL SLABS THICKNESS 150mm.

SLAB REINFORCEMENT SCHEDULE

S1: ø12@150 EW TOP ø12@300 BOTTOM.

ALL OTHER SLAB EXCEPT "S1"
ø12@250 EW TOP ø12@300 BOTTOM

1 0 1 2 3 4 5 6 7 8 9
1:100

UNLESS OTHERWISE NOTED, LINEAR DIMENSIONS SHOWN ARE IN MILLIMETERS.

SYMBOL	REVISIONS	DATE	APP
		19/03/2007	

DESIGNED BY: TCP
DATE: 19 January 2009
DWN BY: TCP
SUBMITTED BY: PHILIP L. DINELLO, SENIOR PCT PROJECTS DEV.
CHK BY: KGO
FILE NO.: AF0701 A-S002PN

US Army Corps of Engineers
Transatlantic Programs Center

AFGHAN NATIONAL POLICE
UP DISTRICT HEADQUARTERS
(2 STORY)
AFGHANISTAN
POLICE HEADQUARTERS
SECOND FLOOR STRUCTURAL PLAN

SHEET REFERENCE NUMBER:
A
S-2

$DATE$
$FILE$

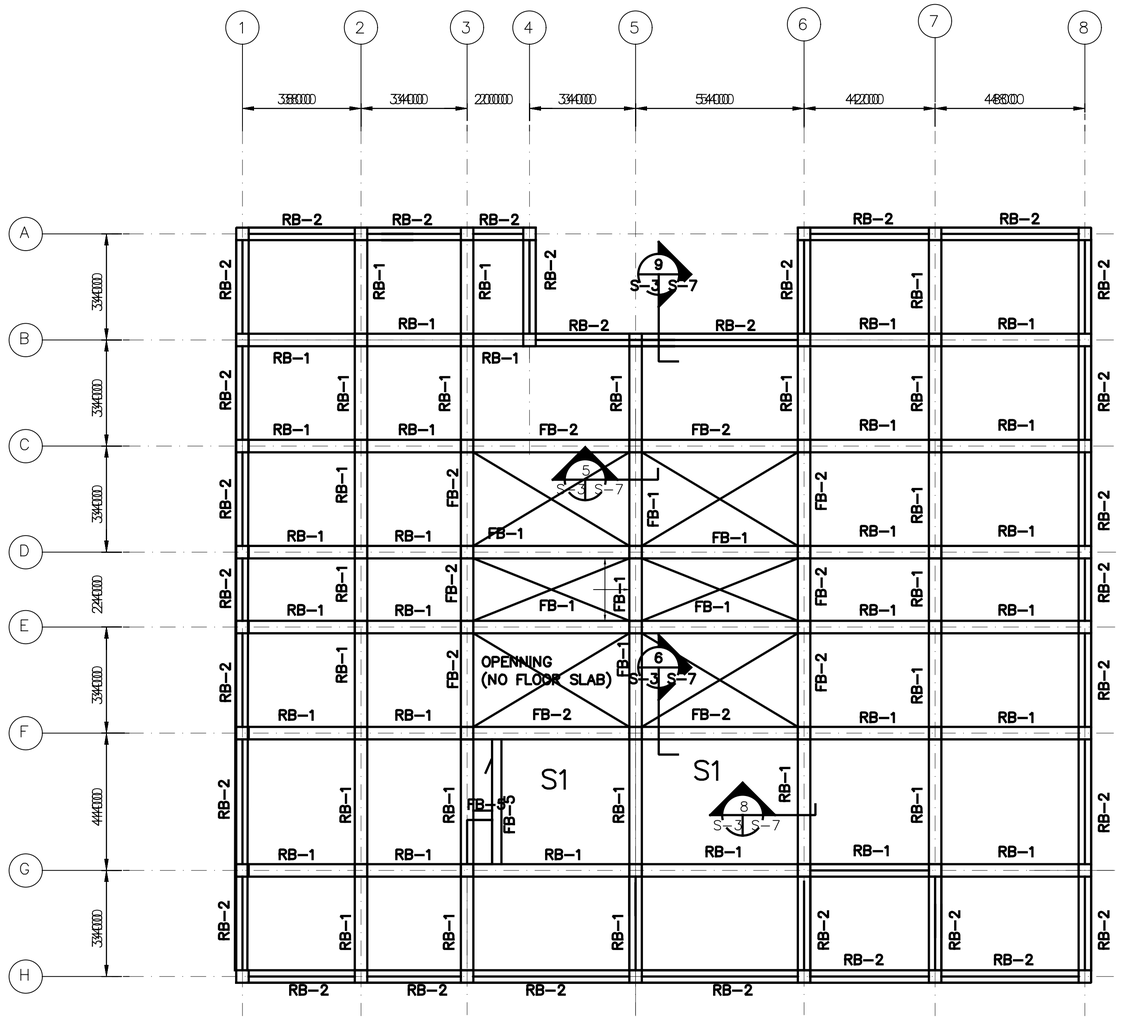

LOWER ROOF STRUCTURAL PLAN

SCALE= 1:100

ALL SLAB THICKNESS 150mm

SLAB REINFORCEMENT SCHEDULE

S1: ø12@150 O.C. EW TOP ø12@300 O.C. BOTTOM.

ALL OTHER SLAB EXCEPT "S1"
ø12@250 O.C. EW TOP ø12@300 O.C. BOTTOM

NOTE:

1. ALL COLUMNS ARE C2, AS SHOWN ON S-6 COLUMN TYPES.

2. A WOODEN TRUSS SYSTEM IS TO BE PROVIDED ON TOP OF THE ROOF SLAB. THIS IS TO BE DESIGNED AND CONSTRUCTED BY THE CONTRACTOR. THE TRUSSES SHALL USE NO LESS THAN 50 X 100 LUMBER AND THE TRUSSES SHALL BE SPACED NO MORE THAN 1 METER ON CENTER. SEE SHEET A-5 FOR MORE INFORMATION.

DESIGN LOADS:
A. LIVE LOAD: 1.0 KPA (20 PSF)
B. WIND LOAD: PER IBC-2003
USE A "3-SECOND" WIND VELOCITY OF 125 KPH (78 MPH),
EXPOSURE C AND IMPORTANCE FACTOR I=1.0.
C. EARTHQUAKE LOAD: PER IBC-2003
SEISMICITY: Sa=1.65g AND S1=0.75g

1 0 1 2 3 4 5 6 7 8 9
1:100

UNLESS OTHERWISE NOTED, LINEAR DIMENSIONS SHOWN ARE IN MILLIMETERS.

SYMBOL	DESCRIPTION	DATE	APP
*	BEAM AT 6H AND 7H	19/03/2007	

DESIGNED BY: TCP
DATE: 19 January 2009
DWN BY: TCP
SUBMITTED BY: PHILIP L. DINELLO, CHIEF, PCX ACTIVITIES DEV.
CHK BY: KGO
FILE NO.: AF0701 A-S803PN

US Army Corps of Engineers
Transatlantic Programs Center

AFGHAN NATIONAL POLICE
UP DISTRICT HEADQUARTERS
(2 STORY)
AFGHANISTAN
POLICE HEADQUARTERS
LOWER ROOF STRUCTURAL PLAN

SHEET REFERENCE NUMBER:
A
S-3

$DATE$
$FILE$

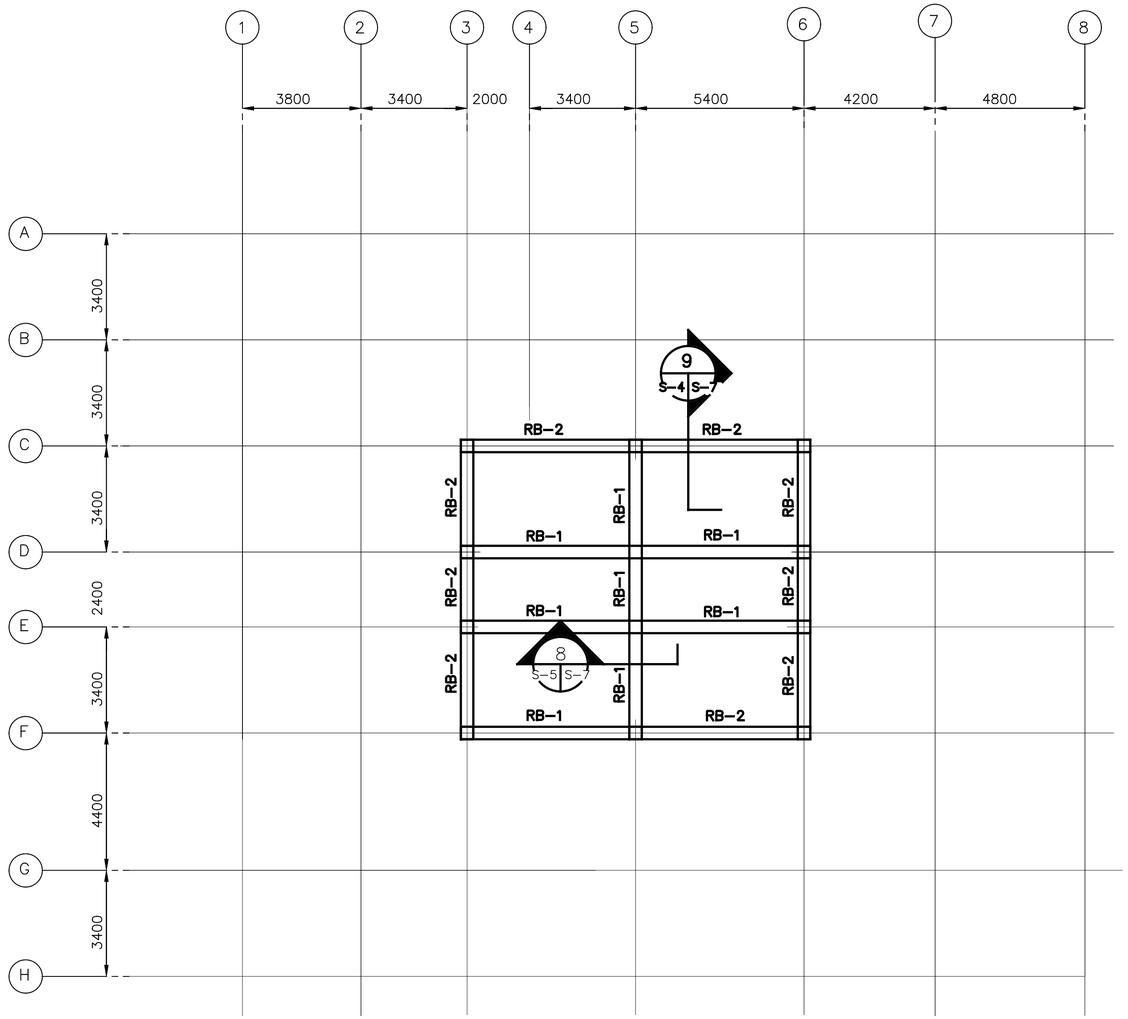

UPPER ROOF STRUCTURAL PLAN

SCALE= 1:100

SLAB REINFORCEMENT SCHEDULE

ALL SLAB ø12@250 EW TOP ø12@300 BOTTOM

NOTE:

1. ALL COLUMNS ARE C2, AS SHOWN ON S-6 COLUMN TYPES.

2. A WOODEN TRUSS SYSTEM IS TO BE PROVIDED ON TOP OF THE ROOF SLAB. THIS IS TO BE DESIGNED AND CONSTRUCTED BY THE CONTRACTOR. THE TRUSSES SHALL USE NO LESS THAN 50 X 100 LUMBER AND THE TRUSSES SHALL BE SPACED NO MORE THAN 1 METER ON CENTER. SEE SHEET A-5 FOR MORE INFORMATION.

DESIGN LOADS:
A. LIVE LOAD: 1.0 KPA (20 PSF)
B. WIND LOAD: PER IBC-2003
USE A "3-SECOND" WIND VELOCITY OF 125 KPH (78 MPH), EXPOSURE C AND IMPORTANCE FACTOR I=1.0.
C. EARTHQUAKE LOAD: PER IBC-2003
SEISMICITY: Sa=1.65g AND S1=0.75g

1 0 1 2 3 4 5 6 7 8 9
1:100

UNLESS OTHERWISE NOTED, LINEAR DIMENSIONS SHOWN ARE IN MILLIMETERS.

SYMBOL	DESCRIPTION	DATE	APP
REVISIONS		19/03/2007	

DESIGNED BY: TCP
DATE: 19 January 2009
DWN BY: TCP
SUBMITTED BY: PHILIP L. DINELLO, Center PDT Facilities Dev.
CHK BY: KGO
FILE NO.: AF0701 A-S004PN

US Army Corps of Engineers
Transatlantic Programs Center

AFGHAN NATIONAL POLICE
UP DISTRICT HEADQUARTERS
(2 STORY)
AFGHANISTAN
POLICE HEADQUARTERS
UPPER ROOF STRUCTURAL PLAN

SHEET REFERENCE NUMBER:
A
S-4

$DATE$
$FILE$

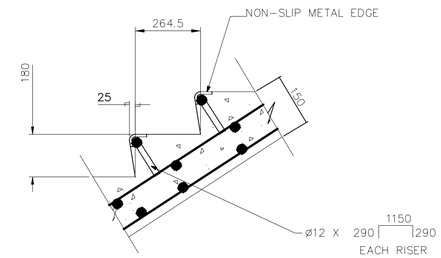

DETAIL
SCALE NTS
S-5 S-5

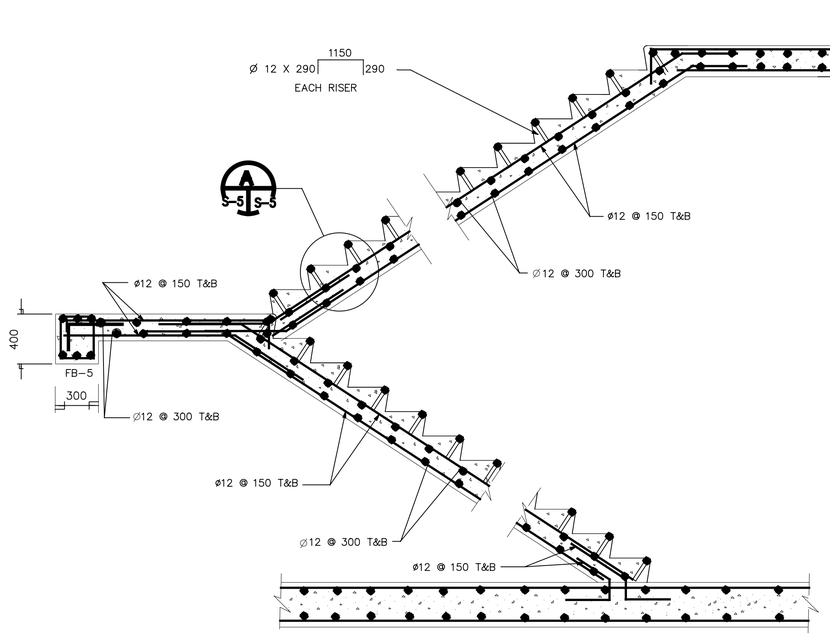

INTERIOR TYPICAL STAIRWAY
SCALE

SECTION
SCALE NTS
S-2 S-5

1 .50 0 1
1:20

UNLESS OTHERWISE NOTED, LINEAR DIMENSIONS SHOWN ARE IN MILLIMETERS.

SYMBOL	DESCRIPTION	DATE	APP
REVISIONS		19/03/2007	

DESIGNED BY: TCP
DATE: 19 January 2009
DWN BY: TCP
SUBMITTED BY: PHILIP L. DINELLO, Center POT FACILITIES DEV.
CHK BY: KGO
FILE NO.: AF0701 A-S005SE

US Army Corps of Engineers
Transatlantic Programs Center

AFGHAN NATIONAL POLICE
UP DISTRICT HEADQUARTERS
(2 STORY)
AFGHANISTAN
POLICE HEADQUARTERS
INTERIOR TYPICAL STAIRWAY

SHEET REFERENCE NUMBER:
A
S-5

$DATE$
$FILE$

COLUMN SCHEDULE

COLUMN GRIDS	STORY	COLUMN TYPE	CONCRETE DIMENSIONS		VERTICAL REINFORCEMENT	TIE REINFORCEMENT		
			WIDTH	DEPTH		SIZE	SPACING	SETS
A–1, A–2, A–3, A–4, A–6, A–7, A–8 B–1, B–2, B–3, B–4, B–5, B–6, B–7, B–8 C–1, C–2, C–3, C–5, C–6, C–7, C–8 D–1, D–2, D–3, D–5, D–6, D–7, D–8 E–1, E–2, E–3, E–5, E–6, E–7, E–8 F–1, F–2, F–3, F–5, F–6, F–7, F–8 G–1, G–2, G–3, G–5, G–6, G–7, G–8 H–1, H–2, H–3, H–5, H–6, H–7, H–8	FIRST FLOOR	C1	400	400	8–ø22	ø10	300	3
A–1, A–2, A–3, A–4, A–6, A–7, A–8 B–1, B–2, B–3, B–4, B–5, B–6, B–7, B–8 C–1, C–2, C–3, C–5, C–6, C–7, C–8 D–1, D–2, D–3, D–5, D–6, D–7, D–8 E–1, E–2, E–3, E–5, E–6, E–7, E–8 F–1, F–2, F–3, F–5, F–6, F–7, F–8 G–1, G–2, G–3, G–5, G–6, G–7, G–8 H–1, H–2, H–3, H–5, H–6, H–7, H–8	SECOND FLOOR	C2	400	400	8–ø22	ø10	300	2
C–3, C–5, C–6 D–3, D–5, D–6 E–3, E–5, E–6 F–3, F–5, F–6	THIRD LEVEL	C2	400	400	8–ø22	ø10	300	2

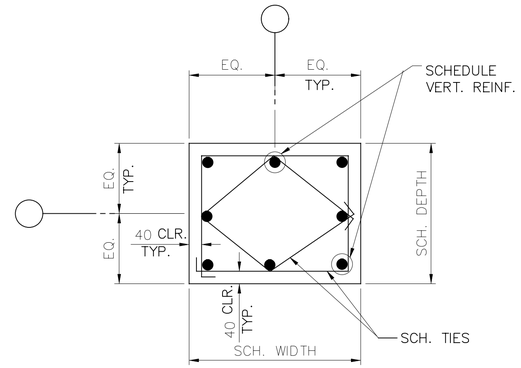

C1 C2

COLUMNS C–1 ARE FOR GROUND FLOOR ONLY

COLUMNS C–2 ARE FOR ALL FLOORS ABOVE GROUND FLOOR. TWO INTERIOR (NOT CENTER) REBAR FROM EACH FACE SHALL NOT BE CONTINUED BEYOND FIRST FLOOR.

COLUMN TYPES

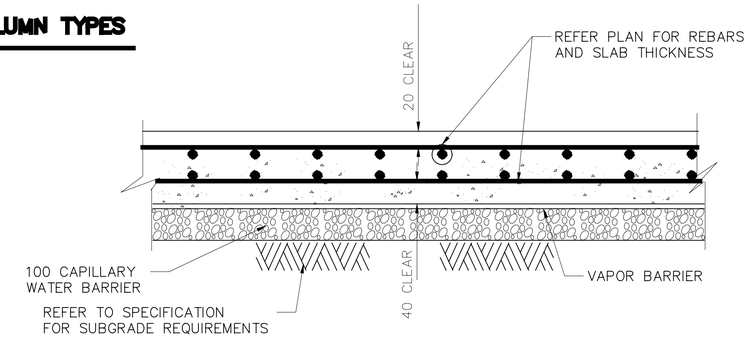

MAT SLAB WITH TOP & BOTTOM REINFORCEMENTS

DETAIL D
N.T.S.
S–6 | S–6

DETAIL A
N.T.S.
S–6 | S–6

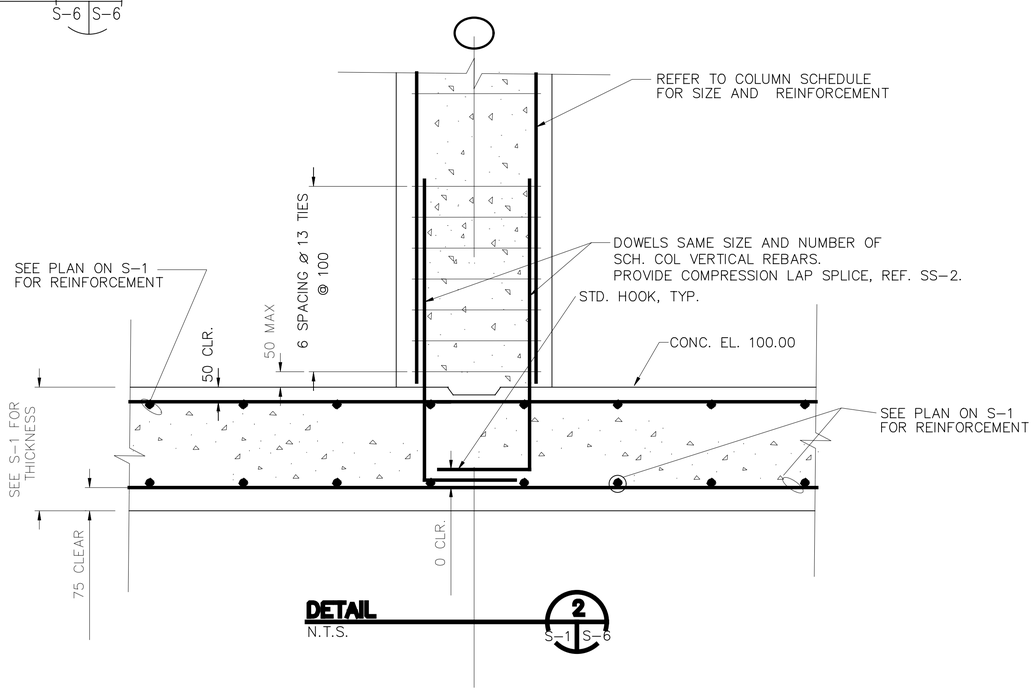

DETAIL 2
N.T.S.
S–1 | S–6

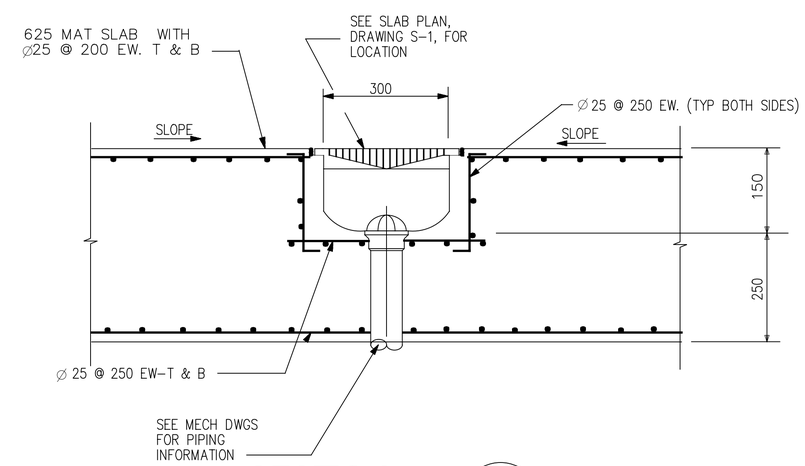

SECTION 4
N.T.S.
S–2 | S–6

UNLESS OTHERWISE NOTED, LINEAR DIMENSIONS SHOWN ARE IN MILLIMETERS.

REVISIONS				
*	SYMBOL	DESCRIPTION	DATE	APP
			19/03/2007	

DESIGNED BY: RG
DATE: 19 January 2009
DWN BY: TCP
SUBMITTED BY: PHILIP L. DINELLO, Center PDT Facilities Dev.
CHK BY: KGO
FILE NO.: AF0701 A–SF06DT

US Army Corps of Engineers
Transatlantic Programs Center

AFGHAN NATIONAL POLICE
UP DISTRICT HEADQUARTERS
(2 STORY)
AFGHANISTAN
POLICE HEADQUARTERS
SLAB–ON–GRADE DETAILS

SHEET REFERENCE NUMBER:
A
S–6

$DATE$
$FILE$

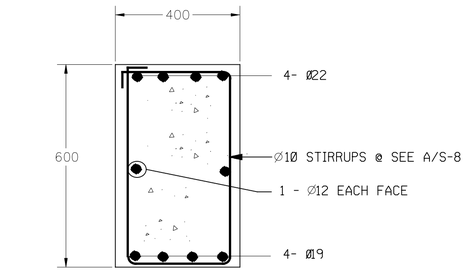

FB–1

SECTION 5 (S-3 / S-7)
SCALE 1:10

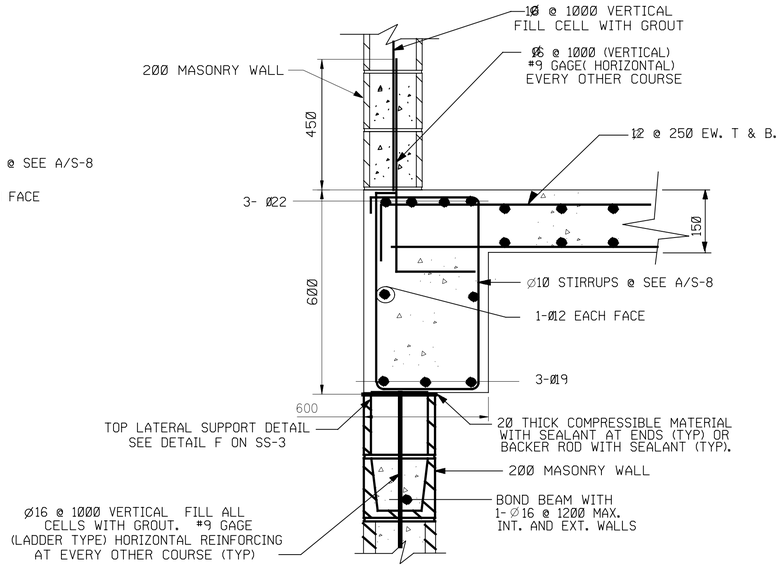

FB–2

SECTION 6 (S-3 / S-7)
SCALE 1:10

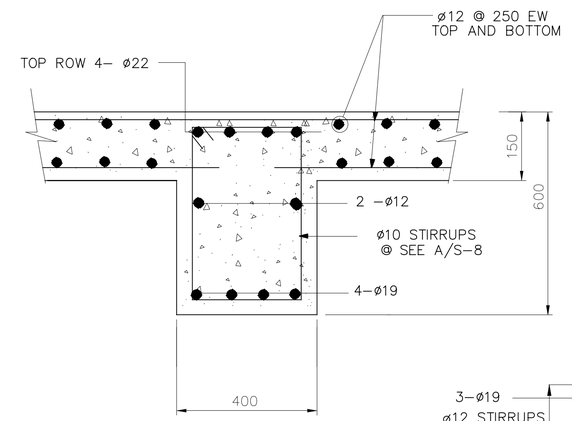

FB–3

SECTION 7 (S-3 / S-7)
SCALE 1:10

NOTES:

1. GRADE BEAM REINFORCING IS CONTINUOUS THROUGH THE COLUMN AND COLUMN FOOTINGS.

2. COORDINATE REBAR PLACEMENT BETWEEN BEAMS OF DIFFERENT WIDTHS SO THAT A MAXIMUM NUMBER OF REBAR IS CONTINUOUS. BEND BARS AS REQUIRED.

3. ALL CELLS OF CMU SHALL BE FULLY GROUTED.

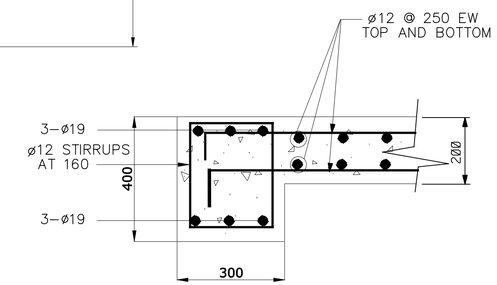

FB–5

SECTION 10 (S-2 / S-3 / S-7)
SCALE 1:10

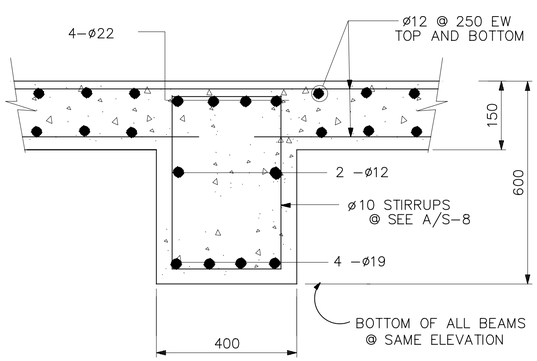

RB–1

SECTION 8 (S-3,S-4 / S-7)
SCALE

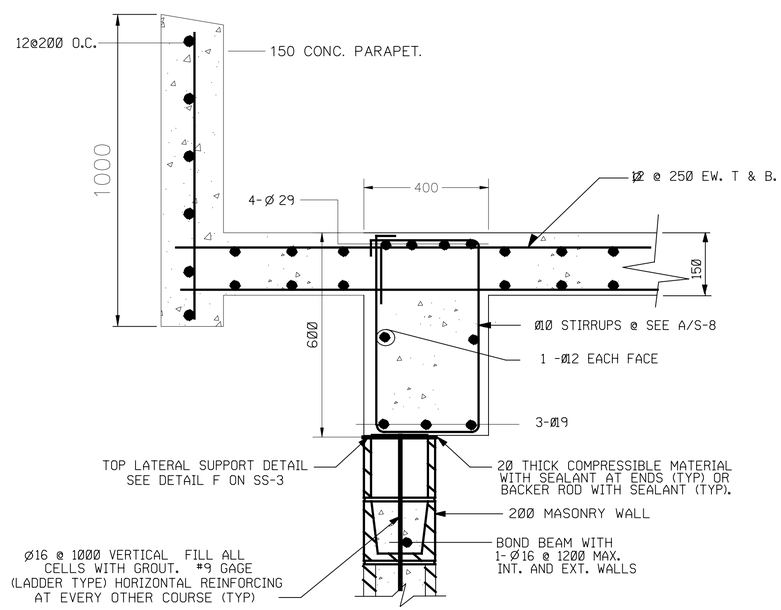

RB–2

SECTION 9 (S-3 / S-7)
SCALE 1:10

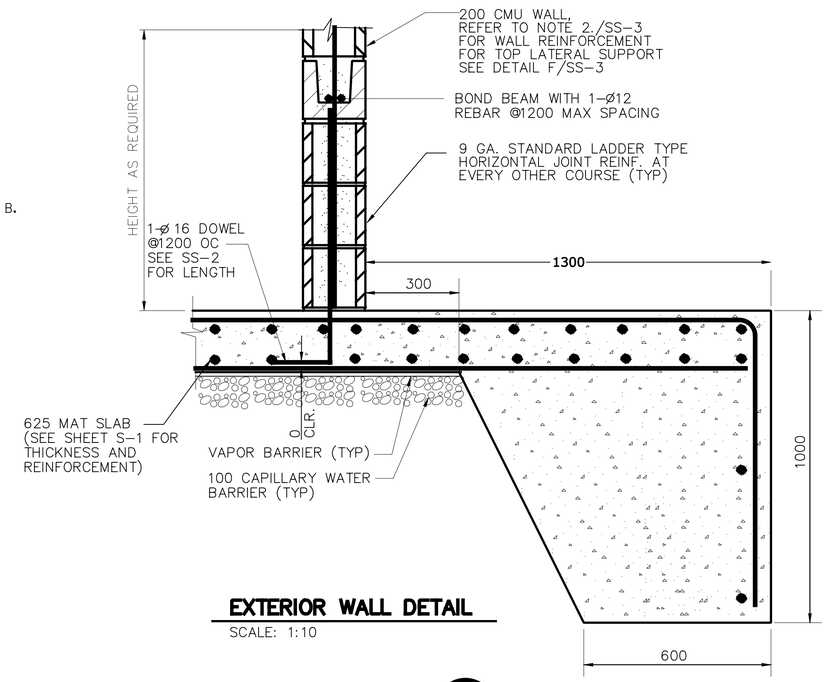

EXTERIOR WALL DETAIL
SCALE: 1:10

SECTION 11 (S-1 / S-7)
SCALE 1:10

UNLESS OTHERWISE NOTED, LINEAR DIMENSIONS SHOWN ARE IN MILLIMETERS.

SYMBOL	DESCRIPTION	DATE	APP
REVISIONS		19/03/2007	

DESIGNED BY: RG
DATE: 19 January 2009
DWN BY: TCP
SUBMITTED BY: PHILIP L. DINELLO, Center PDT Facilities DEV.
CHK BY: KGO
FILE NO.: AF0701 A–SF07DT

US Army Corps of Engineers
Transatlantic Programs Center

AFGHAN NATIONAL POLICE
UP DISTRICT HEADQUARTERS
(2 STORY)
AFGHANISTAN

POLICE HEADQUARTERS
ROOF BEAM AND
STRUCTURAL SLAB DETAILS

SHEET REFERENCE NUMBER:
A
S–7

$DATE$
$FILE$

TYPICAL ROOF BEAMS AND FLOOR BEAMS AT DISCONTINUOUS COLUMNS

TYPICAL FLOOR BEAMS

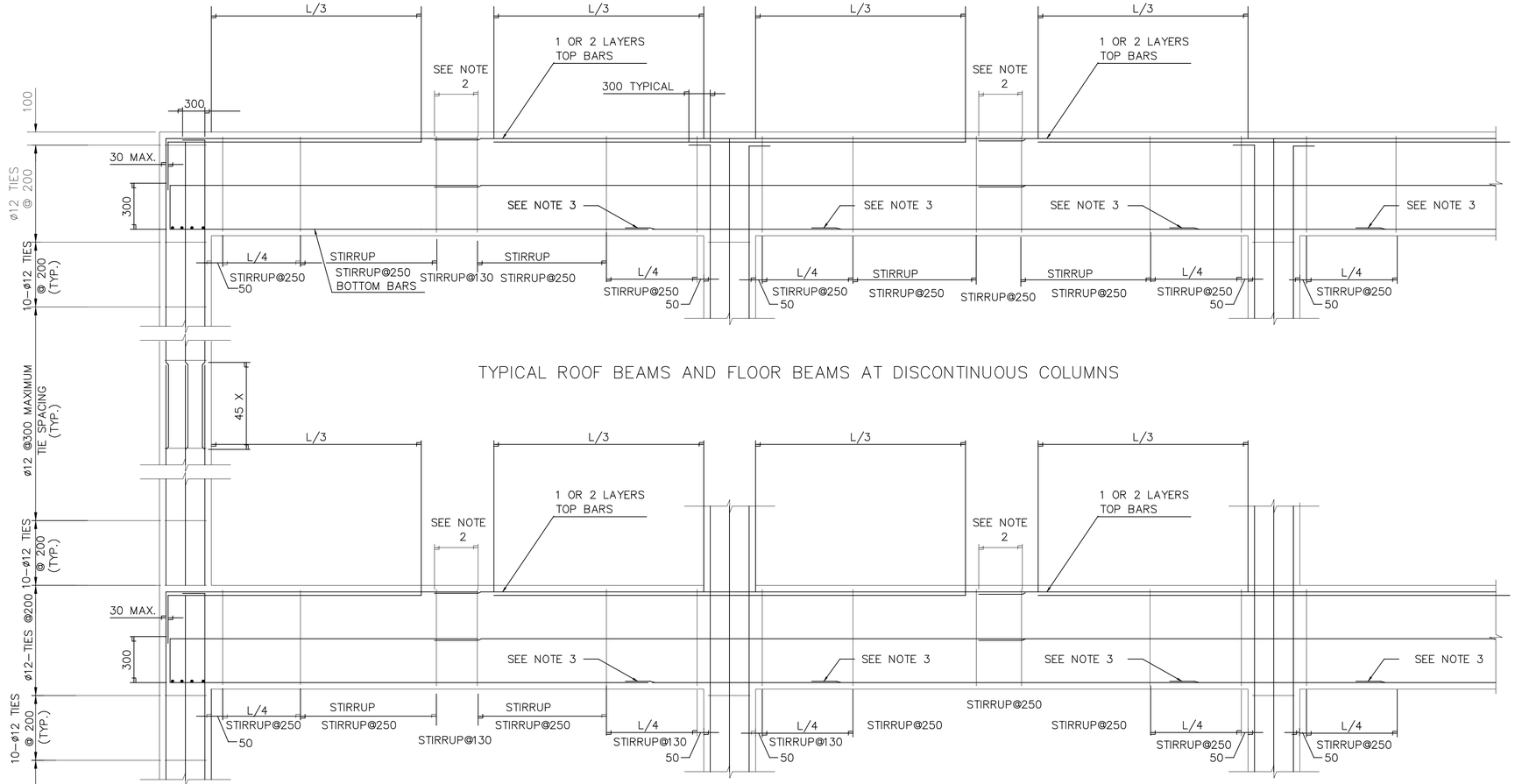

NOTES:

1. ALL LAP SPLICES IN BEAMS AND COLUMNS SHALL BE CLASS B SPLICES

2. PROVIDE A 200mm MAXIMUM OF STIRRUP SPACING AT LAP SPLICES, AS SHOWN ON DRAWING. ALL SPLICES NOTED SHALL OCCUR AT MIDSPAN.

3. THE LAP SPLICES SHOWN SHALL BE PERMITTED IN SPANS MEASURING 6 METERS OR MORE FROM CENTERLINES OF SUPPORTS (COLUMNS OR WALLS) ONLY. SPLICES INDICATED SHALL BE LOCATED ONE METER FROM THE FACE OF THE COLUMN, AS SHOWN.

4. BEAM STEEL NOT SHOWN FOR CLARITY.

STANDARD BEAM AND COLUMN DETAIL

UNLESS OTHERWISE NOTED, LINEAR DIMENSIONS SHOWN ARE IN MILLIMETERS.

SYMBOL	REVISIONS	DESCRIPTION	DATE	APP
			19/03/2007	

DESIGNED BY: TCP
DATE: 19 January 2009
DWN BY: RG
SUBMITTED BY: PHILIP L. DINELLO, Center PDT, FACILITIES DEV.
CHK BY: KGO
FILE NO.: AF0701 A-S8080T

US Army Corps of Engineers
Transatlantic Programs Center

AFGHAN NATIONAL POLICE
UP DISTRICT HEADQUARTERS
(2 STORY)
AFGHANISTAN
POLICE HEADQUARTERS
STANDARD BEAM AND COLUMN DETAIL

SHEET REFERENCE NUMBER:
A
S-8

$DATE$
$FILE$

NOTES:
1. FOR LEGENDS, ABBREVIATIONS AND STANDARD MECHANICAL DETAILS SEE SHEETS SM–1 AND SM–3.
2. FOR EQUIPMENT SCHEDULES AND CONTROL DIAGRAMS SEE SHEET SM–2.
3. ALL DIMENSIONS ARE IN MM (IN) UNLESS NOTED OTHERWISE.
4. PROVIDE EACH EXHAUST FAN WITH MANUFACTURER'S STANDARD EXHAUST GRILL AND GRAVITY BACKDRAFT DAMPER.
5. PROVIDE 300 x 200 ALL–WEATHER LOUVER WITH BIRDSCREEN.
6. KITCHEN EXHAUST HOOD WITH ALUMINUM FILTERS AND SEALED DUCT CONNECTION TO EXHAUST FAN. SIZE OF HOOD TO MATCH COOKING EQUIPMENT PROVIDED.
7. INSTALL EXHAUST FAN EF–A–11 IS SIZED AT A MINIMUM CAPACITY BASED ON 1200W X 3000L HOOD: ITS CAPACITY SHALL BE REVISED UPWARD TO MATCH AIRFLOW PERFORMANCE REQUIRED BY THE KITCHEN HOOD EQUIPMENT MANUFACTURER.

DUCT SIZING LEGEND

(1) 200 X 100

(4) 350 X 300

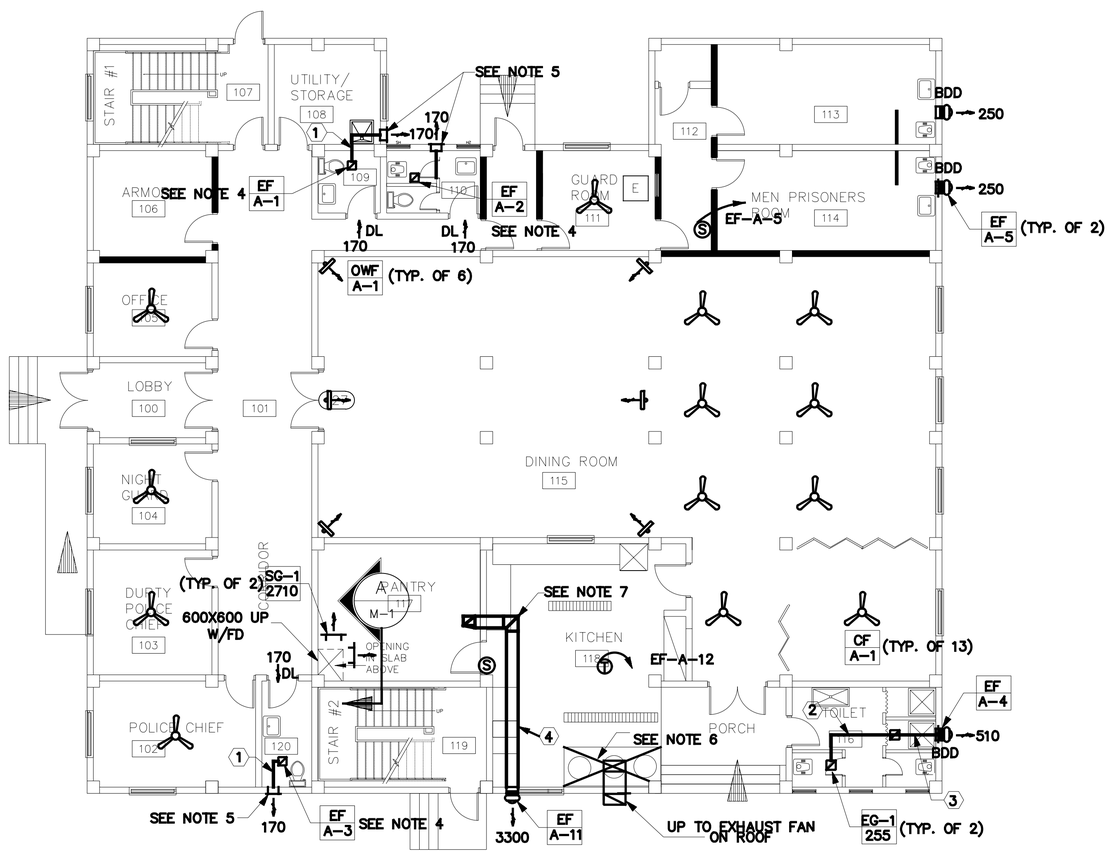

FIRST FLOOR HVAC PLAN
SCALE= 1:100

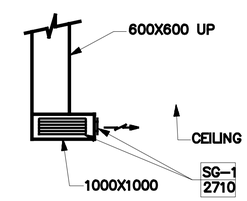

KITCHEN

DETAIL A M–1
SCALE 1: 50

1:50

1:100

UNLESS OTHERWISE NOTED, LINEAR DIMENSIONS SHOWN ARE IN MILLIMETERS.

REVISIONS			
SYMBOL	DESCRIPTION	DATE	APP
1		19/03/2007	

DESIGNED BY: RMS
DATE: 19 January 2009
DWN BY: RMS
SUBMITTED BY:
CHK BY: SE
FILE NO.: AF0701 A–MH01PN

US Army Corps of Engineers
Transatlantic Programs Center

AFGHAN NATIONAL POLICE
UP DISTRICT HEADQUARTERS
(2 STORY)
AFGHANISTAN
POLICE HEADQUARTERS

FIRST FLOOR HVAC PLAN

SHEET REFERENCE NUMBER:
A
M–1

$DATE$
$FILE$

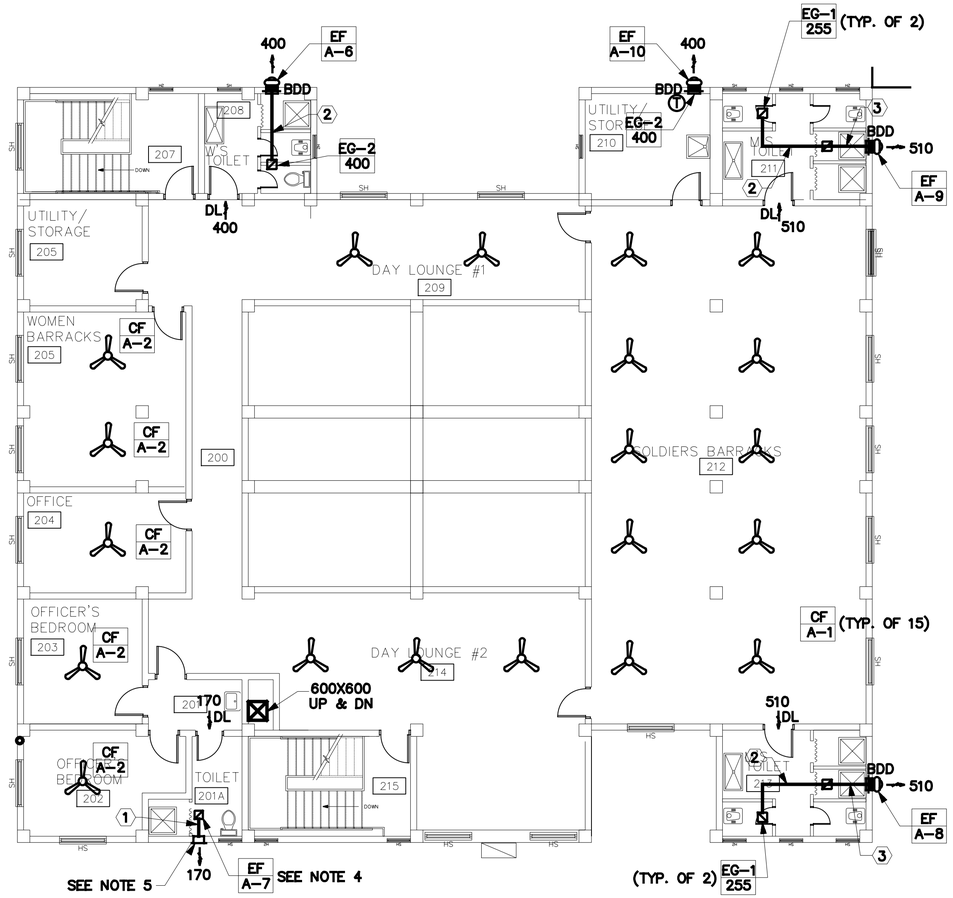

SECOND FLOOR HVAC PLAN

SCALE= 1:100

DUCT SIZING LEGEND

1. 200 X 100
2. 200 X 150
3. 200 X 200

1 0 1 2 3 4 5 6 7 8 9
1:100

UNLESS OTHERWISE NOTED, LINEAR DIMENSIONS SHOWN ARE IN MILLIMETERS.

REVISIONS				
SYMBOL	DESCRIPTION	DATE	APP	
		19/03/2007		

DESIGNED BY: RMS
DATE: 19 January 2009
DWN BY: RMS
SUBMITTED BY:
CHK BY: SE
FILE NO.: AF0701 A-MH02PN

US Army Corps of Engineers
Transatlantic Programs Center

AFGHAN NATIONAL POLICE
UP DISTRICT HEADQUARTERS
(2 STORY)
AFGHANISTAN
POLICE HEADQUARTERS

SECOND FLOOR HVAC PLAN

SHEET REFERENCE NUMBER:
A
M-2

$DATE$
$FILE$

AIR HANDLING UNIT SCHEDULE											
EQUIPT. NO.	LOCATION	DISCHARGE	CAPACITY (KW)	AIR FLOW (CMH)	ELECTRICAL DATA				TEMP. RISE DEG C	SOUND POWER dBA	REMARKS
					HP	VOLTS	PH	HZ			
AHU-1	CELLS	VERTICAL	5.2	1200	.25	220	1	50	35	45	DUCT MOUNTED HEATER

NOTES:

1. PROVIDE DOUBLE WALL TYPE METAL VENT THROUGH EXTERIOR WALL FOR VENTING OF WOOD STOVES, TOP AT BOTTOM OF CONCRETE BEAM. WOOD STOVES TO BE PROVIDED BY OCCUPANTS. COORDINATE SIZE OF VENT THROUGH WALL WITH WOOD STOVE MANUFACTURER'S RECOMMENDATIONS.
2. PROVIDE 25MM GAS SUPPLY LINE WITH A SERVICE SHUT-OFF VALVE DOWN TO THE COOKING STOVES. GAS PIPING AND CONNECTION TO INDIVIDUAL STOVES SHALL BE IN CONFORMANCE WITH STOVE MANUFACTURER RECOMMENDATIONS.

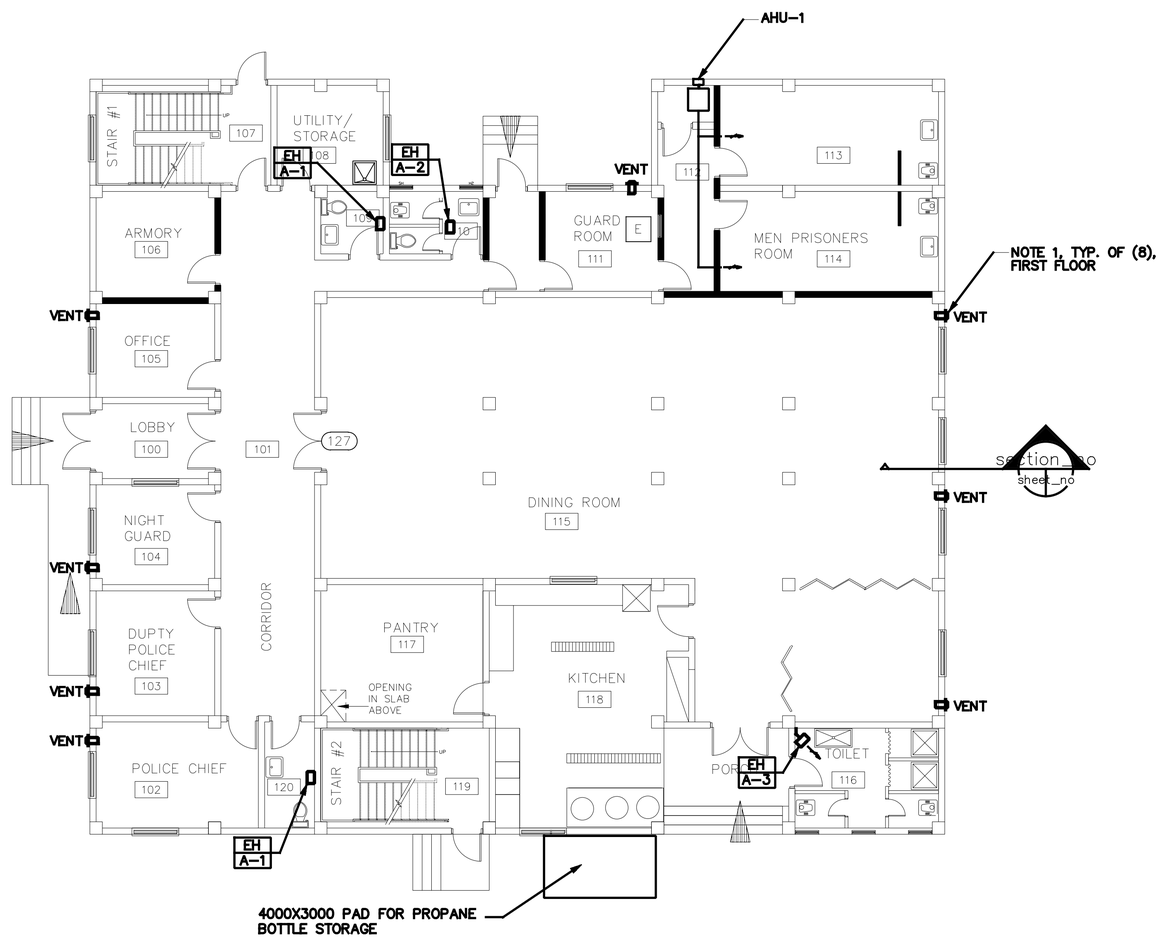

FIRST FLOOR HEATING PLAN

SCALE= 1:100

1 0 1 2 3 4 5 6 7 8 9

1:100

UNLESS OTHERWISE NOTED, LINEAR DIMENSIONS SHOWN ARE IN MILLIMETERS.

SYMBOL	DESCRIPTION	DATE	APP

DESIGNED BY: RMS
DATE: 19 January 2009
DWN BY: RMS
SUBMITTED BY:
CHK BY: SE
FILE NO.: AF0701 A-MH03PN

US Army Corps of Engineers
Transatlantic Programs Center

AFGHAN NATIONAL POLICE
UP DISTRICT HEADQUARTERS
(2 STORY)
AFGHANISTAN
POLICE HEADQUARTERS

FIRST FLOOR HEATING PLAN

SHEET REFERENCE NUMBER:
A
M-3

$DATE$
$FILE$

NOTES:

1. PROVIDE DOUBLE WALL TYPE METAL VENT THROUGH EXTERIOR WALL FOR VENTING OF WOOD STOVES, TOP AT BOTTOM OF CONCRETE BEAM. WOOD STOVES TO BE PROVIDED BY OCCUPANTS. COORDINATE SIZE OF VENT THROUGH WALL WITH WOOD STOVE MANUFACTURER'S RECOMMENDATIONS.

2. PROVIDE 25MM GAS SUPPLY LINE WITH A SERVICE SHUT-OFF VALVE DOWN TO THE COOKING STOVES. GAS PIPING AND CONNECTION TO INDIVIDUAL STOVES SHALL BE IN CONFORMANCE WITH STOVE MANUFACTURER RECOMMENDATIONS.

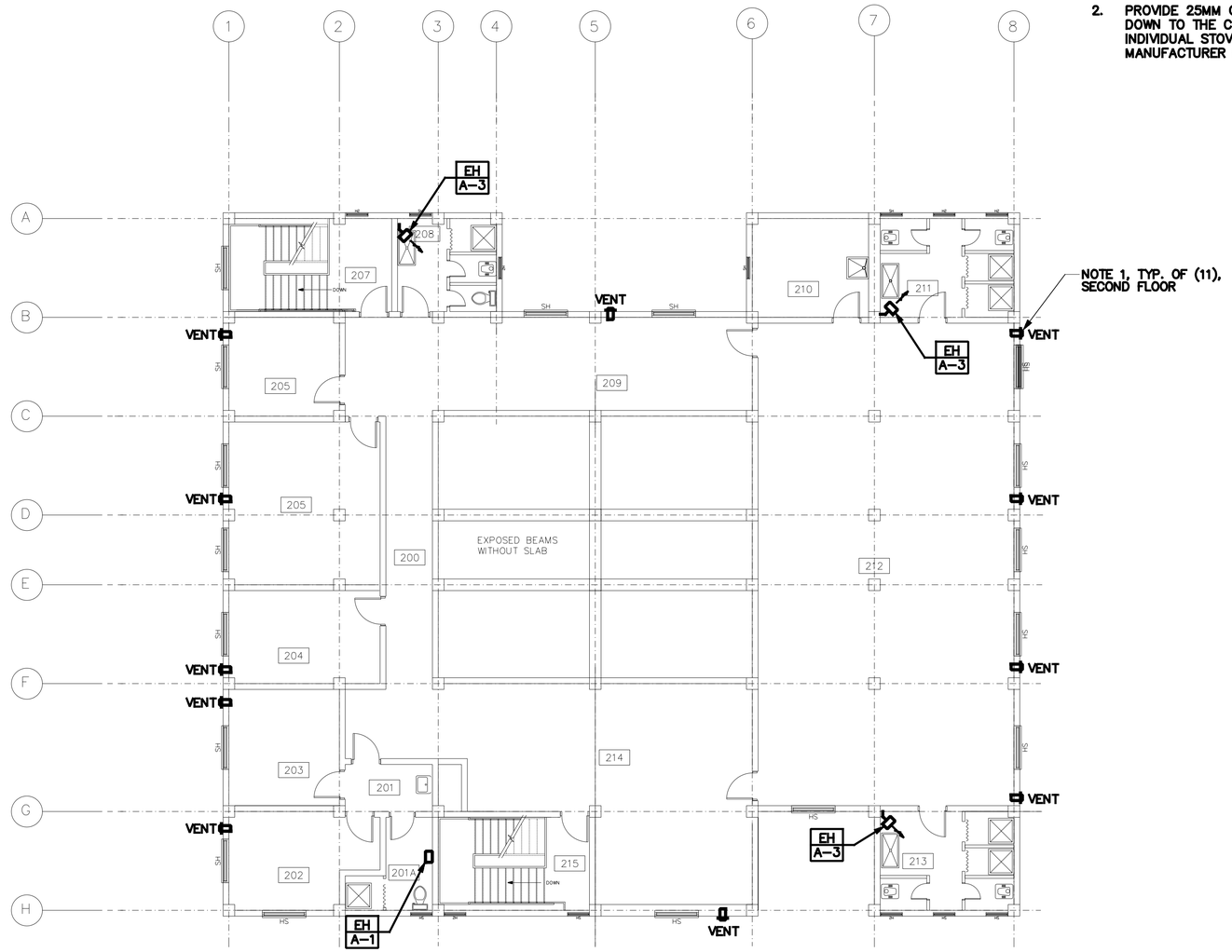

SECOND FLOOR HEATING PLAN
SCALE= 1:100

1 0 1 2 3 4 5 6 7 8 9
1:100

UNLESS OTHERWISE NOTED, LINEAR DIMENSIONS SHOWN ARE IN MILLIMETERS.

SYMBOL	DESCRIPTION	DATE	APP

DESIGNED BY: RMS
DATE: 19 January 2009
DWN BY: RMS
SUBMITTED BY:
CHK BY: SE
FILE NO.: AF0701 A-MH04PN

US Army Corps of Engineers
Transatlantic Programs Center

AFGHAN NATIONAL POLICE
UP DISTRICT HEADQUARTERS
(2 STORY)
AFGHANISTAN
POLICE HEADQUARTERS

SECOND FLOOR HEATING PLAN

SHEET REFERENCE NUMBER:
A
M-4

$DATE$
$FILE$

PARTIAL ROOF PLAN
SCALE= 1: 50

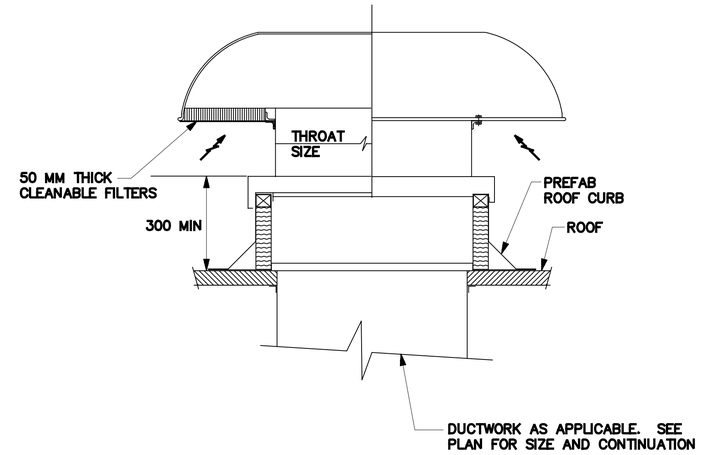

NOTE:
1. FILTER AREA SELECTION AT MAXIMUM FACE VELOCITY OF 300 FPM OR 1.52 MPS.

AIR INTAKE HOOD (A / M-5)
NOT TO SCALE

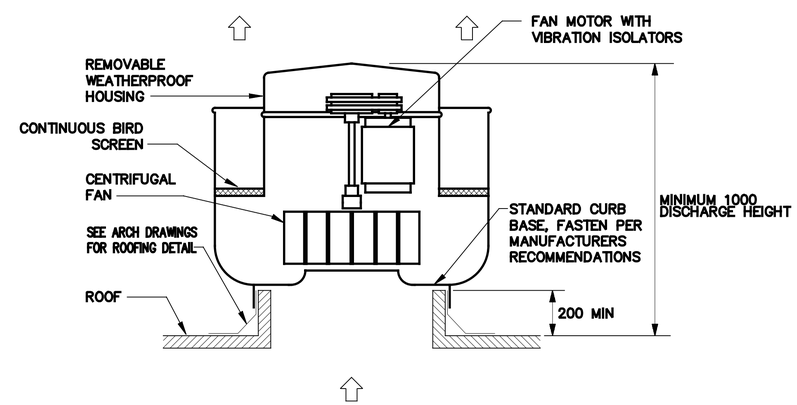

UPBLAST POWER ROOF VENTILATOR (B / M-3)
NOT TO SCALE

1 0 1 2 3 4
1:50

UNLESS OTHERWISE NOTED, LINEAR DIMENSIONS SHOWN ARE IN MILLIMETERS.

SYMBOL	DESCRIPTION	DATE	APP

DESIGNED BY: RMS
DWN BY: JMC
CHK BY: SE
DATE: 19 January 2009
SUBMITTED BY:
FILE NO.: AF0701 A-MHOSPN

US Army Corps of Engineers
Transatlantic Programs Center

AFGHAN NATIONAL POLICE
UP DISTRICT HEADQUARTERS
(2 STORY)
AFGHANISTAN
POLICE HEADQUARTERS
PARTIAL ROOF PLAN

SHEET REFERENCE NUMBER:
A
M-5

$DATE$
$FILE$

NOTES:

1. FOR LEGENDS, ABBREVIATIONS AND PLUMBING FIXTURE SCHEDULE SEE SHEET SP–1.
2. FOR STANDARD PLUMBING DETAILS SEE SHEET SP–2.
3. MINIMUM GREASE INTERCEPTOR FLOW RATE SHALL BE 135 LPM (35 GPM).
4. PROVIDE WALL MOUNTED, 15MM DIA. 12.5m LONG HOSE REEL IN THE KITCHEN.

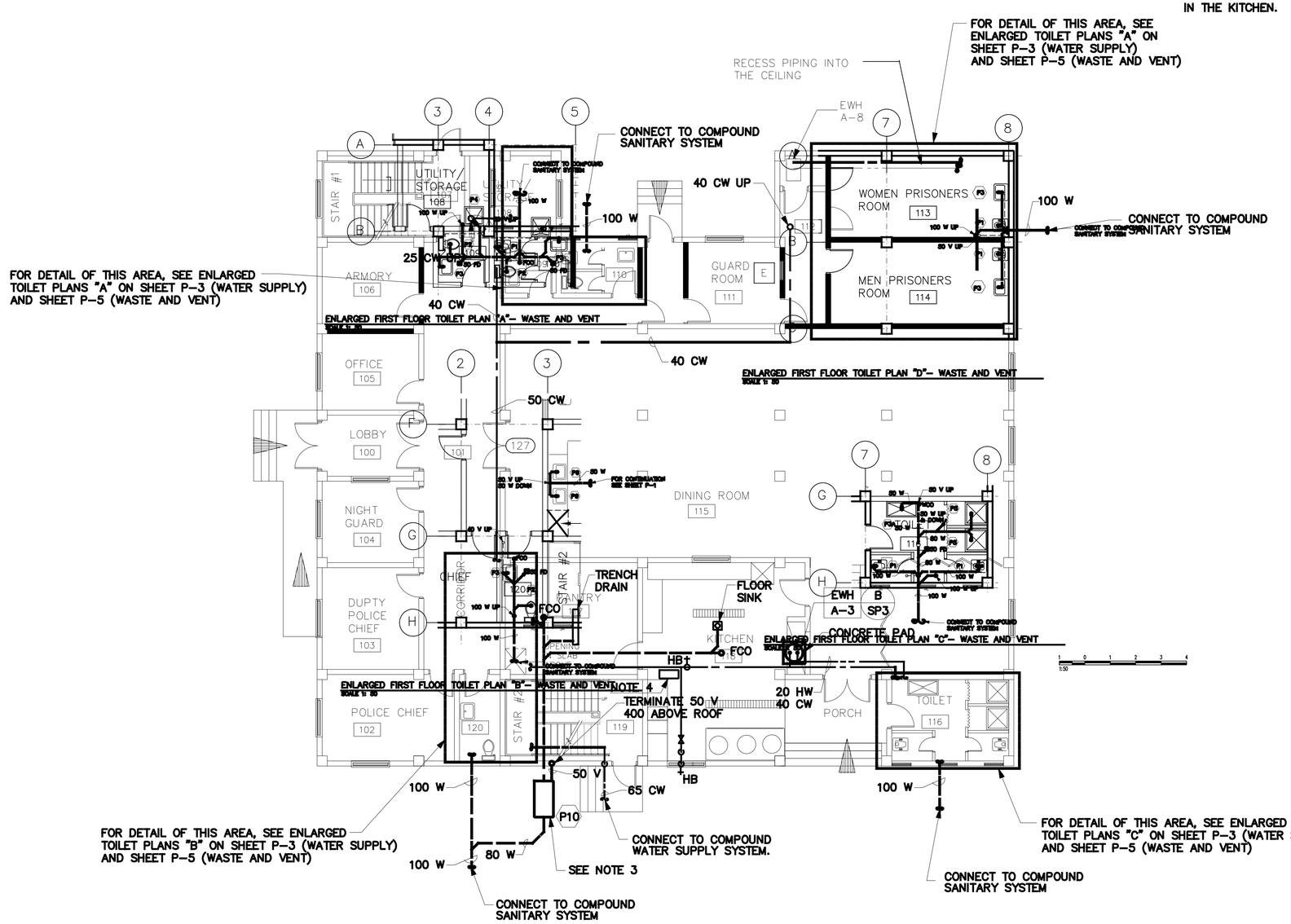

FIRST FLOOR PLUMBING PLAN
SCALE= 1:100

1 0 1 2 3 4 5 6 7 8 9
1:100

UNLESS OTHERWISE NOTED, LINEAR DIMENSIONS SHOWN ARE IN MILLIMETERS.

SYMBOL	DESCRIPTION	DATE	APP

DESIGNED BY: RMS
DWN BY: RMS
CHK BY: SE
DATE: 19 January 2009
SUBMITTED BY:
FILE NO.: AF0701 A–MP01PN

US Army Corps of Engineers
Transatlantic Programs Center

AFGHAN NATIONAL POLICE
UP DISTRICT HEADQUARTERS
(2 STORY)
AFGHANISTAN
POLICE HEADQUARTERS
FIRST FLOOR PLUMBING PLAN

SHEET REFERENCE NUMBER:
A
P–1

$DATE$
$FILE$

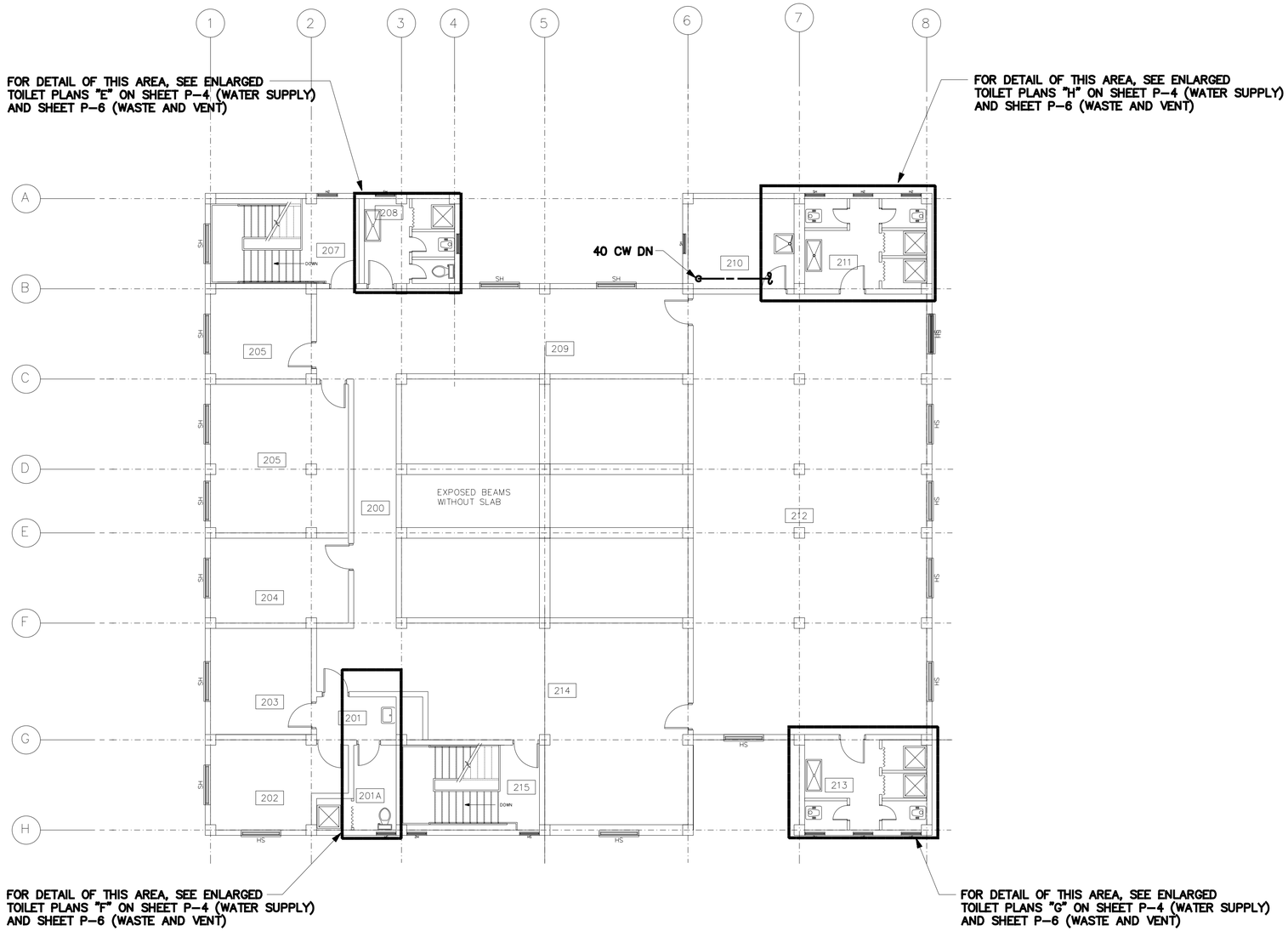

SECOND FLOOR PLUMBING PLAN

SCALE= 1:100

1 0 1 2 3 4 5 6 7 8 9
1:100

UNLESS OTHERWISE NOTED, LINEAR DIMENSIONS SHOWN ARE IN MILLIMETERS.

SYMBOL	DESCRIPTION	DATE	APP

DESIGNED BY: RMS
DATE: 19 January 2009
DWN BY: RMS
SUBMITTED BY:
CHK BY: SE
FILE NO.: AF0701 A-MP02PN

US Army Corps of Engineers
Transatlantic Programs Center

AFGHAN NATIONAL POLICE
UP DISTRICT HEADQUARTERS
(2 STORY)
AFGHANISTAN
POLICE HEADQUARTERS
SECOND FLOOR PLUMBING PLAN

SHEET REFERENCE NUMBER:
A
P-2

$DATE$
$FILE$

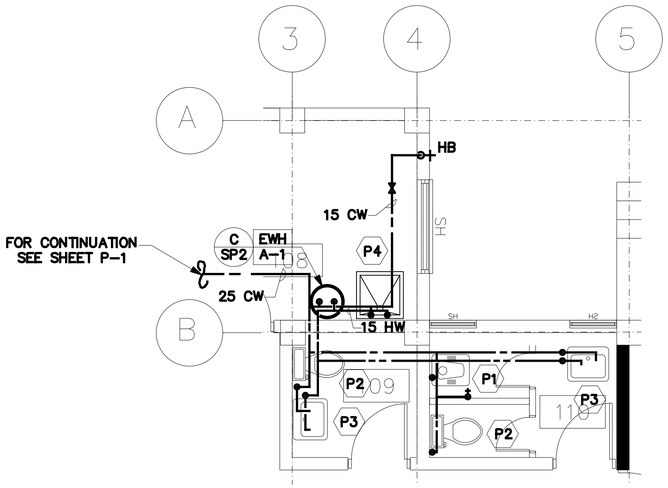

ENLARGED FIRST FLOOR TOILET PLAN "A"– WATER SUPPLY
SCALE 1: 50

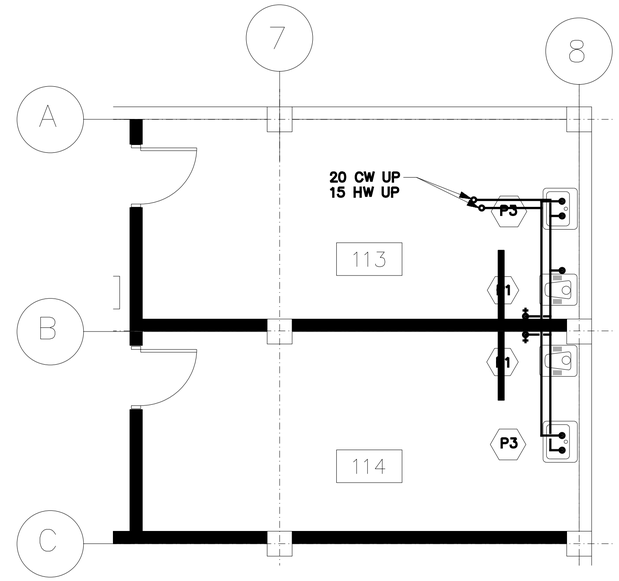

ENLARGED FIRST FLOOR TOILET PLAN "D"– WATER SUPPLY
SCALE 1: 50

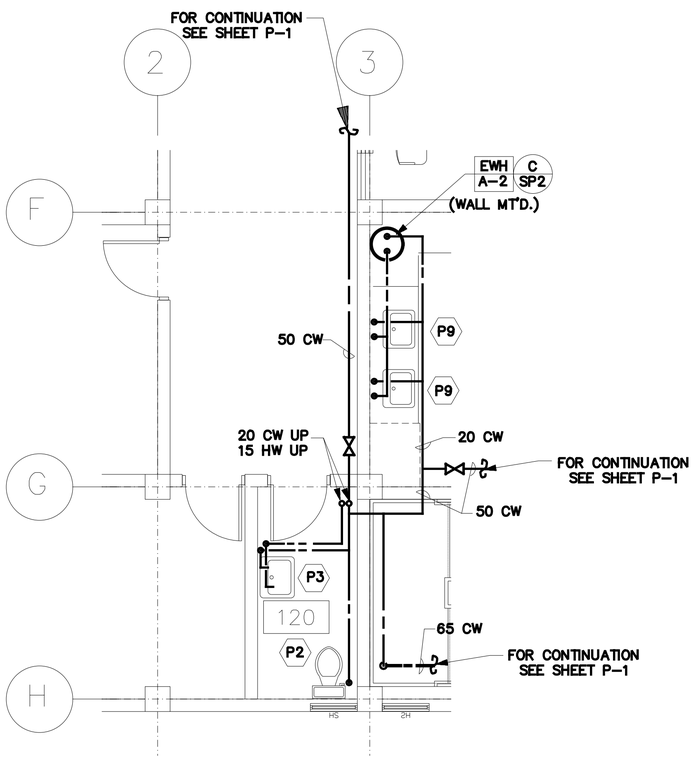

ENLARGED FIRST FLOOR TOILET PLAN "B"– WATER SUPPLY
SCALE 1: 50

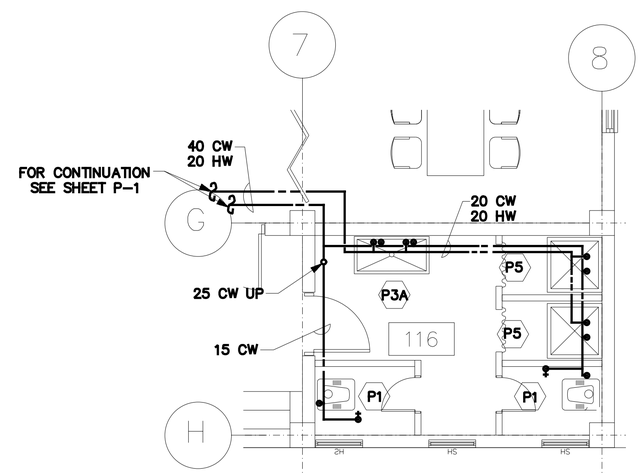

ENLARGED FIRST FLOOR TOILET PLAN "C"– WATER SUPPLY
SCALE 1: 50

1:50

UNLESS OTHERWISE NOTED, LINEAR DIMENSIONS SHOWN ARE IN MILLIMETERS.

SYMBOL	DESCRIPTION	DATE	APP

DESIGNED BY: RMS
DATE: 19 January 2009
DWN BY: RMS
SUBMITTED BY:
CHK BY: SE
FILE NO.: AF0701 A-MP03LS

US Army Corps of Engineers
Transatlantic Programs Center

AFGHAN NATIONAL POLICE
UP DISTRICT HEADQUARTERS
(2 STORY)
POLICE HEADQUARTERS
AFGHANISTAN
FIRST FLOOR ENLARGED
TOILET PLANS– WATER SUPPLY

SHEET REFERENCE NUMBER:
A
P–3

$DATE$
$FILE$

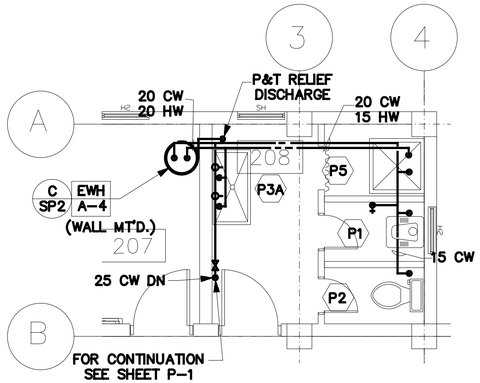

ENLARGED SECOND FLOOR TOILET PLAN "E"– WATER SUPPLY
SCALE= 1: 50

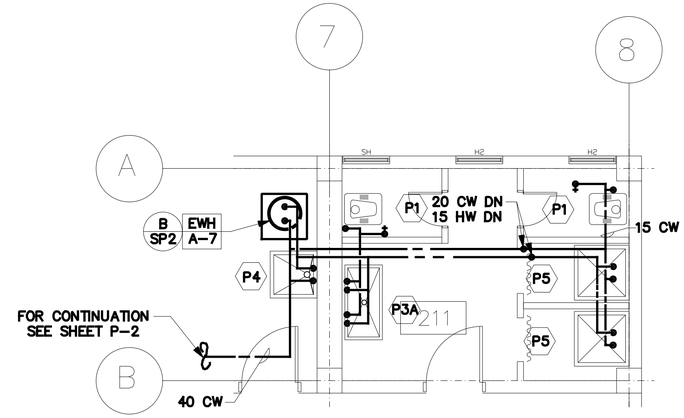

ENLARGED SECOND FLOOR TOILET PLAN "H"– WATER SUPPLY
SCALE= 1: 50

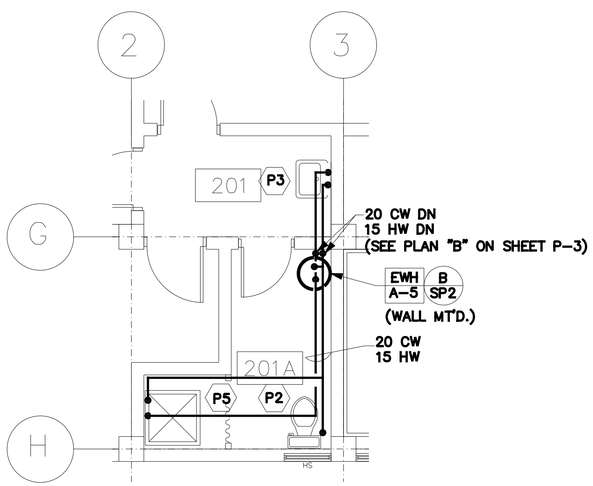

ENLARGED SECOND FLOOR TOILET PLAN "F"– WATER SUPPLY
SCALE= 1: 50

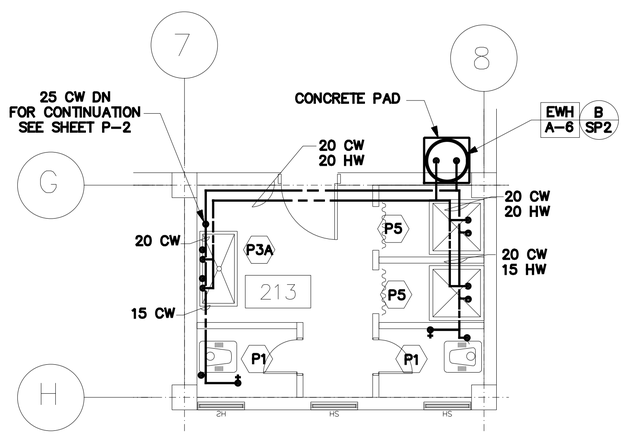

ENLARGED SECOND FLOOR TOILET PLAN "G"– WATER SUPPLY
SCALE= 1: 50

1 0 1 2 3 4
1:50

UNLESS OTHERWISE NOTED, LINEAR DIMENSIONS SHOWN ARE IN MILLIMETERS.

SYMBOL	DESCRIPTION	DATE	APP

DESIGNED BY: RMS
DATE: 19 January 2009
DWN BY: RMS
SUBMITTED BY:
CHK BY: SE
FILE NO.: AF0701 A-MP04LS

US Army Corps of Engineers
Transatlantic Programs Center

AFGHAN NATIONAL POLICE
UP DISTRICT HEADQUARTERS
(2 STORY)
AFGHANISTAN
POLICE HEADQUARTERS
SECOND FLOOR ENLARGED
TOILET PLANS– WATER SUPPLY

SHEET REFERENCE NUMBER:
A
P–4

$DATE$
$FILE$

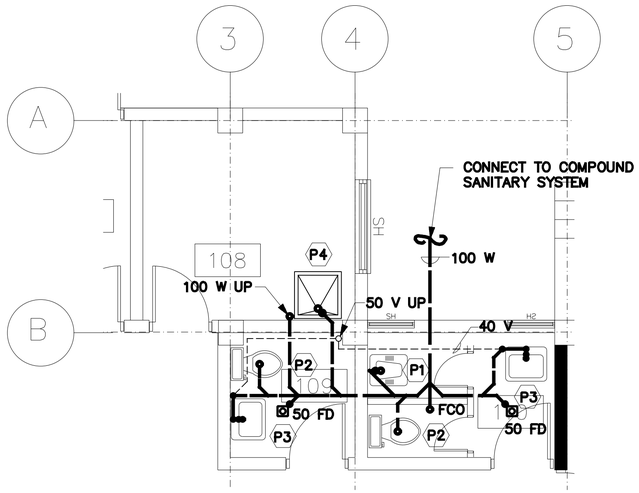

ENLARGED FIRST FLOOR TOILET PLAN "A"– WASTE AND VENT
SCALE 1: 50

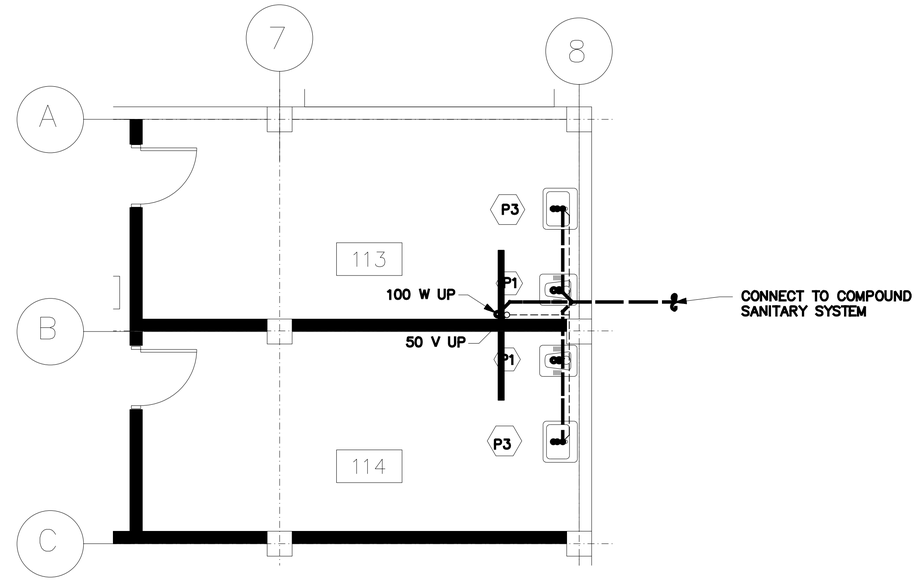

ENLARGED FIRST FLOOR TOILET PLAN "D"– WASTE AND VENT
SCALE 1: 50

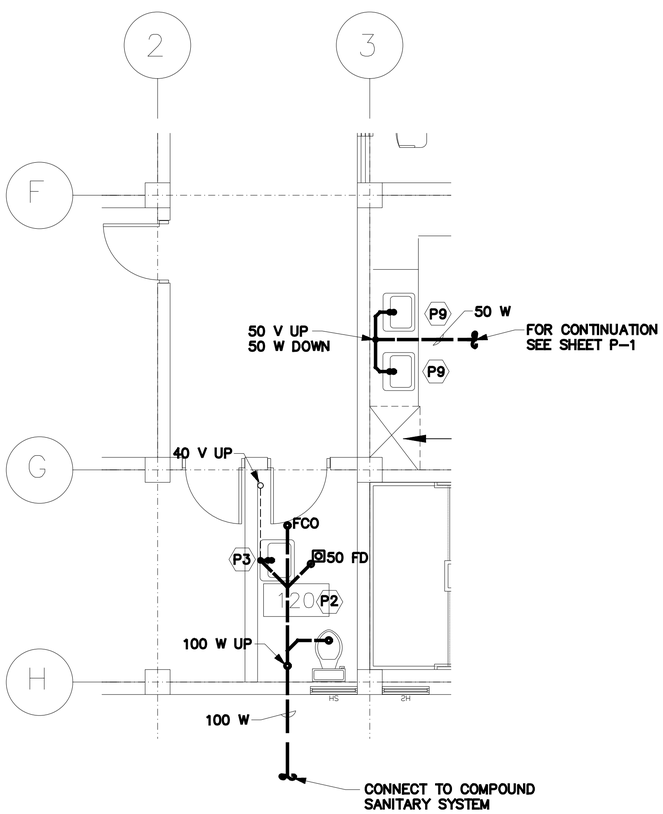

ENLARGED FIRST FLOOR TOILET PLAN "B"– WASTE AND VENT
SCALE 1: 50

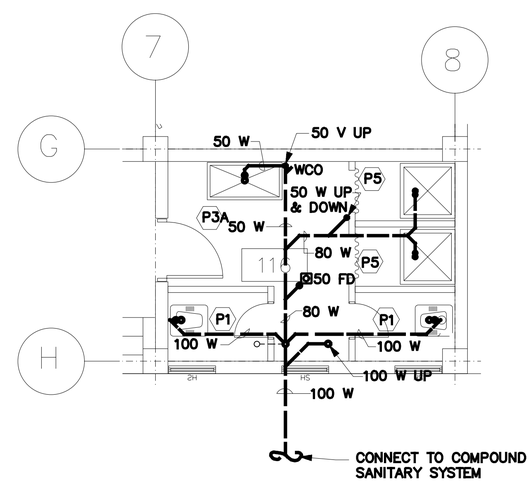

ENLARGED FIRST FLOOR TOILET PLAN "C"– WASTE AND VENT
SCALE 1: 50

1 0 1 2 3 4
1:50

UNLESS OTHERWISE NOTED, LINEAR DIMENSIONS SHOWN ARE IN MILLIMETERS.

SYMBOL	DESCRIPTION	DATE	APP

DESIGNED BY: RMS
DATE: 19 January 2009
DWN BY: RMS
SUBMITTED BY:
CHK BY: SE
FILE NO.: AF0701 A–MP05LS

US Army Corps of Engineers
Transatlantic Programs Center

AFGHAN NATIONAL POLICE
UP DISTRICT HEADQUARTERS
(2 STORY)
AFGHANISTAN
POLICE HEADQUARTERS
FIRST FLOOR ENLARGED
TOILET PLANS– WASTE AND VENT

SHEET REFERENCE NUMBER:
A
P–5

$DATE$
$FILE$

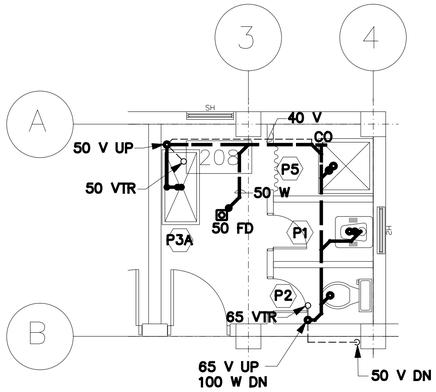

ENLARGED SECOND FLOOR TOILET PLAN "E"– WASTE AND VENT
SCALE= 1: 50

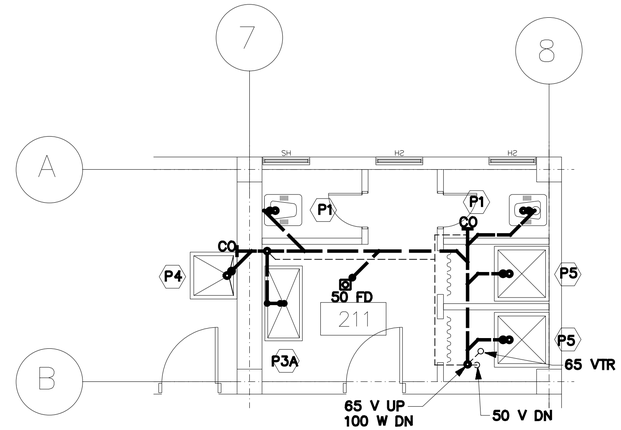

ENLARGED SECOND FLOOR TOILET PLAN "H"– WASTE AND VENT
SCALE= 1: 50

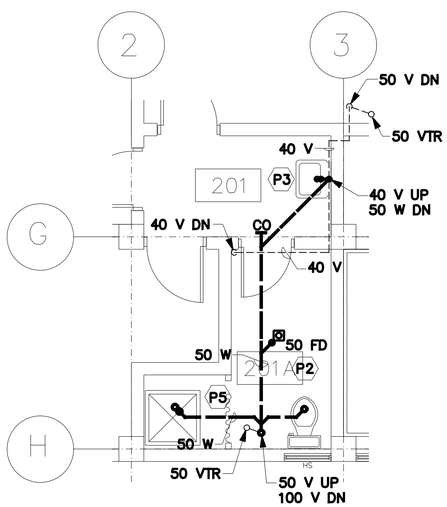

ENLARGED SECOND FLOOR TOILET PLAN "F"– WASTE AND VENT
SCALE= 1: 50

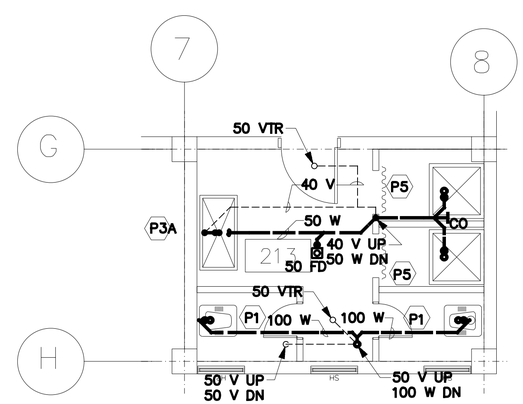

ENLARGED SECOND FLOOR TOILET PLAN "G"– WASTE AND VENT
SCALE= 1: 50

1 0 1 2 3 4
1:50

UNLESS OTHERWISE NOTED, LINEAR DIMENSIONS SHOWN ARE IN MILLIMETERS.

SYMBOL	DESCRIPTION	DATE	APP

DESIGNED BY: RMS
DWN BY: RMS
CHK BY: SE
DATE: 19 January 2009
SUBMITTED BY:
FILE NO.: AF0701 A–MP06LS

US Army Corps of Engineers
Transatlantic Programs Center

AFGHAN NATIONAL POLICE
UP DISTRICT HEADQUARTERS
(2 STORY)
AFGHANISTAN
POLICE HEADQUARTERS
SECOND FLOOR ENLARGED
TOILET PLANS– WASTE AND VENT

SHEET REFERENCE NUMBER:
A
P–6

$DATE$
$$FILE$

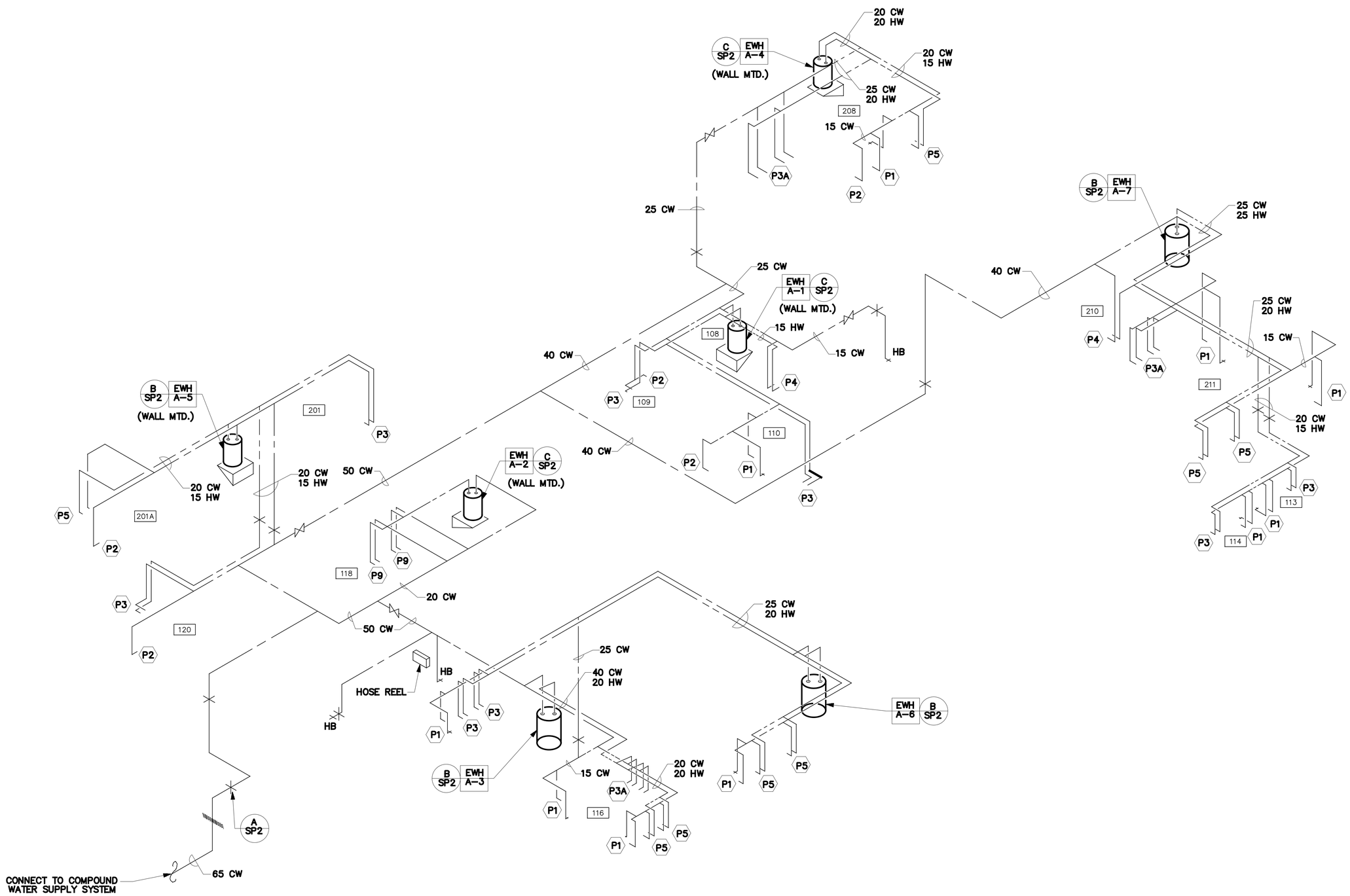

WATER SUPPLY RISER DIAGRAM
NOT TO SCALE

SYMBOL	DESCRIPTION	DATE	APP

DESIGNED BY: RMS
DWN BY: RMS
CHK BY: SE
DATE: 19 January 2009
SUBMITTED BY:
FILE NO.: AF0701 A-MP0701

US Army Corps of Engineers
Transatlantic Programs Center

AFGHAN NATIONAL POLICE
UP DISTRICT HEADQUARTERS
(2 STORY)
AFGHANISTAN
POLICE HEADQUARTERS
WATER SUPPLY RISER DIAGRAM

SHEET REFERENCE NUMBER:
A
P-7

$DATE$
$FILE$

EWH
A–X

ELECTRIC WATER HEATER SCHEDULE

UNIT NUMBER	LOCATION (ROOM NO.)	STORAGE CAPACITY (LITERS)	MINIMUM RECOVERY RATE (LITERS/HOUR) @ 55.5 C RISE	NUMBER OF ELEMENTS	ELECTRICAL REQUIREMENTS				REMARKS
					KW INPUT	VOLTS	PH	HZ	
A–1	UTILITY	114	39	1	2.5	220	1	50	WALL MOUNTED
A–2	KITCHEN	114	89	2	6.0	380	3	50	WALL MOUNTED
A–3	DINING ROOM	300	186	3	12.0	380	3	50	FLOOR MOUNTED
A–4	STAIRWELL (UPSTAIRS)	114	39	1	4.0	380	3	50	WALL MOUNTED
A–5	TOILET	72	31	1	2.0	220	1	50	WALL MOUNTED
A–6	BARRACKS	300	186	3	12.0	380	3	50	FLOOR MOUNTED
A–7	UTILITY	450	186	3	12.0	380	3	50	FLOOR MOUNTED
A–8	CELLS	N/A	N/A	1	9.0	220	1	50	WALL MOUNTED

SYMBOL	DESCRIPTION	DATE	APP

DESIGNED BY: RMS
DATE: 19 January 2009
DWN BY: RMS
SUBMITTED BY:
CHK BY: SE
FILE NO.: AF0701 A–MP8SC

US Army Corps of Engineers
Transatlantic Programs Center

AFGHAN NATIONAL POLICE
UP DISTRICT HEADQUARTERS
(2 STORY)
AFGHANISTAN
POLICE HEADQUARTERS
PLUMBING SCHEDULES

SHEET REFERENCE NUMBER:
A
P–8

$DATE$
$FILE$

NOTES:

1. FOR LEGEND AND ABBREVIATIONS SEE DRAWING SE-1.

2. EXIT LIGHTS AND EMERGENCY LIGHTS SHALL BE CONNECTED AHEAD OF LIGHT SWITCH.

3. FOR LIGHT FIXTURE SCHEDULE SEE DRAWING SE-1.

4. COORDINATE LOCATION OF ALL ELECTRICAL FIXTURES AND EQUIPMENT WITH ALL OTHER TRADES.

5. FOR ONE LINE DIAGRAM SEE DRAWING XE- I, POWER PLANT.

6. ALL LIGHT FIXTURES IN JAIL CELLS SHALL BE TWO LAMP FLUORESCENT TYPE FIXTURES SUITABLE FOR VANDAL RESISTANCE/ DETENTION CENTER. LIGHT FIXTURES SHALL WITHSTAND THE PHYSICAL ABUSE AND THE INTENT- TO- DESTROY TYPE ABUSE.

7. ALL WIRING SHALL BE SURFACE MOUNTED IN METAL CONDUIT.

8. COORDINATE LOCATION OF THE CEILING FANS WITH LIGHT FIXTURES.

9. CONNECT THE LIGHT SWITCH TO FIXTURE TYPE "D" ON SECOND FLOOR. SEE DRAWING E-2.

10. COORDINATE LOCATION AND MOUNTING HEIGHT OF THE LIGHT FIXTURE IN THIS ROOM WITH THE EXHAUST FAN AND THE DUCT TO PROVIDE REQUIRED CLEARANCE.

11. COORDINATE LOCATION OF THE LIGHT FIXTURES IN THIS ROOM WITH THE KITCHEN EXHAUST HOOD.

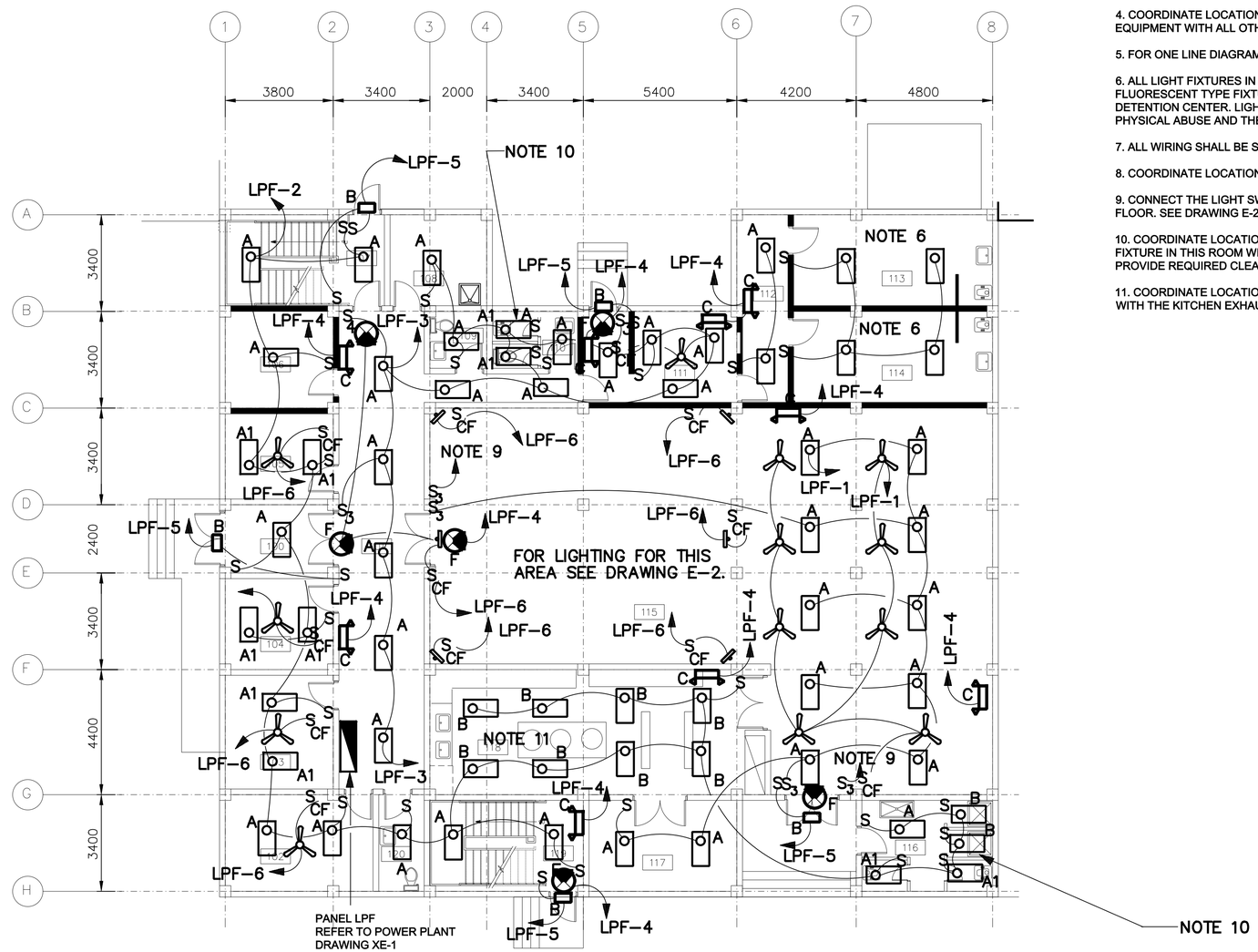

FLOOR PLAN
SCALE=1 :100

FIRST FLOOR LIGHTING PLAN
SCALE= 1:100

1 0 1 2 3 4 5 6 7 8 9
1:100

UNLESS OTHERWISE NOTED, LINEAR DIMENSIONS SHOWN ARE IN MILLIMETERS.

REVISIONS			
SYMBOL	DESCRIPTION	DATE	APP
		19/03/2007	

DESIGNED BY: MM
DATE: 19 January 2009
DWN BY: MM
SUBMITTED BY:
CHK BY: SE
FILE NO.: AF0701 A-EL01PN

US Army Corps of Engineers
Transatlantic Programs Center

AFGHAN NATIONAL POLICE
UP DISTRICT HEADQUARTERS
(2 STORY)
AFGHANISTAN
POLICE HEADQUARTERS
FIRST FLOOR LIGHTING PLAN

SHEET REFERENCE NUMBER:
A
E-1

$DATE$
$FILE$

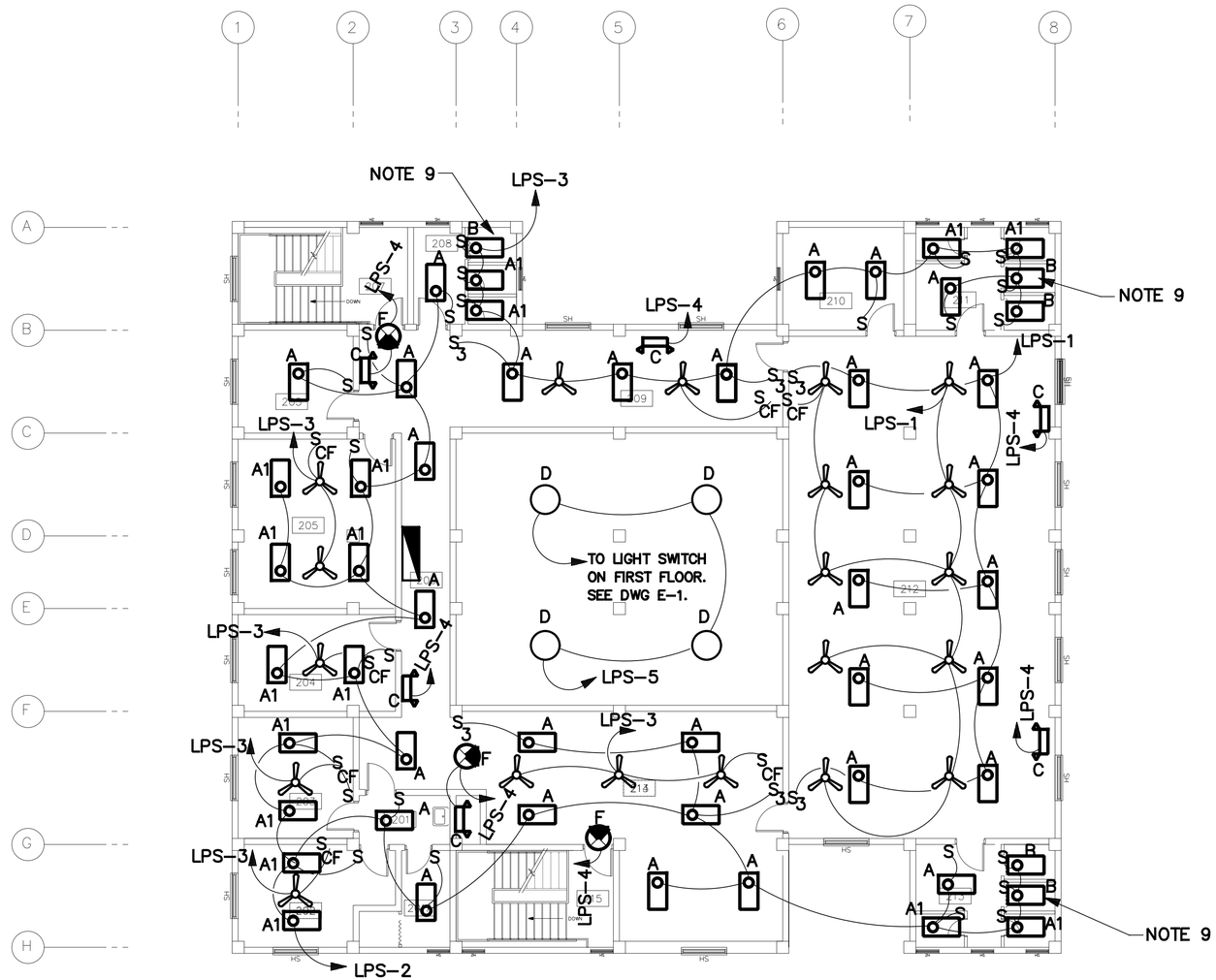

SECOND FLOOR LIGHTING PLAN
SCALE= 1:100

NOTES:

1. FOR LEGEND AND ABBREVIATIONS SEE DRAWING SE-1.

2. EXIT LIGHTS AND EMERGENCY LIGHTS SHALL BE CONNECTED AHEAD OF LIGHT SWITCH.

3. FOR LIGHT FIXTURE SCHEDULE SEE DRAWING SE-1.

4. COORDINATE LOCATION OF ALL ELECTRICAL FIXTURES AND EQUIPMENT WITH ALL OTHER TRADES.

5. FOR ONE LINE DIAGRAM SEE DRAWING XE- I, POWER PLANT.

6. ALL LIGHT FIXTURES IN JAIL CELLS SHALL BE TWO LAMP FLUORESCENT TYPE FIXTURES SUITABLE FOR VANDAL RESISTANCE/ DETENTION CENTER. LIGHT FIXTURES SHALL WITHSTAND THE PHYSICAL ABUSE AND THE INTENT- TO- DESTROY TYPE ABUSE.

7. ALL WIRING SHALL BE SURFACE MOUNTED IN METAL CONDUIT.

8. COORDINATE LOCATION OF THE CEILING FANS WITH LIGHT FIXTURES.

9. COORDINATE LOCATION AND MOUNTING HEIGHT OF THE LIGHT FIXTURE IN THIS ROOM WITH EXHAUST FAN AND THE DUCT TO PROVIDE REQUIRED CLEARANCE.

1 0 1 2 3 4 5 6 7 8 9
1:100

UNLESS OTHERWISE NOTED, LINEAR DIMENSIONS SHOWN ARE IN MILLIMETERS.

SYMBOL	DESCRIPTION	DATE	APP

DESIGNED BY: MM
DATE: 19 January 2009
DWN BY: MM
SUBMITTED BY:
CHK BY: SE
FILE NO.: AF0701 A-EL02PN

US Army Corps of Engineers
Transatlantic Programs Center

AFGHAN NATIONAL POLICE
UP DISTRICT HEADQUARTERS
(2 STORY)
AFGHANISTAN
POLICE HEADQUARTERS
SECOND FLOOR LIGHTING PLAN

SHEET REFERENCE NUMBER:
A
E-2

$DATE$
$FILE$

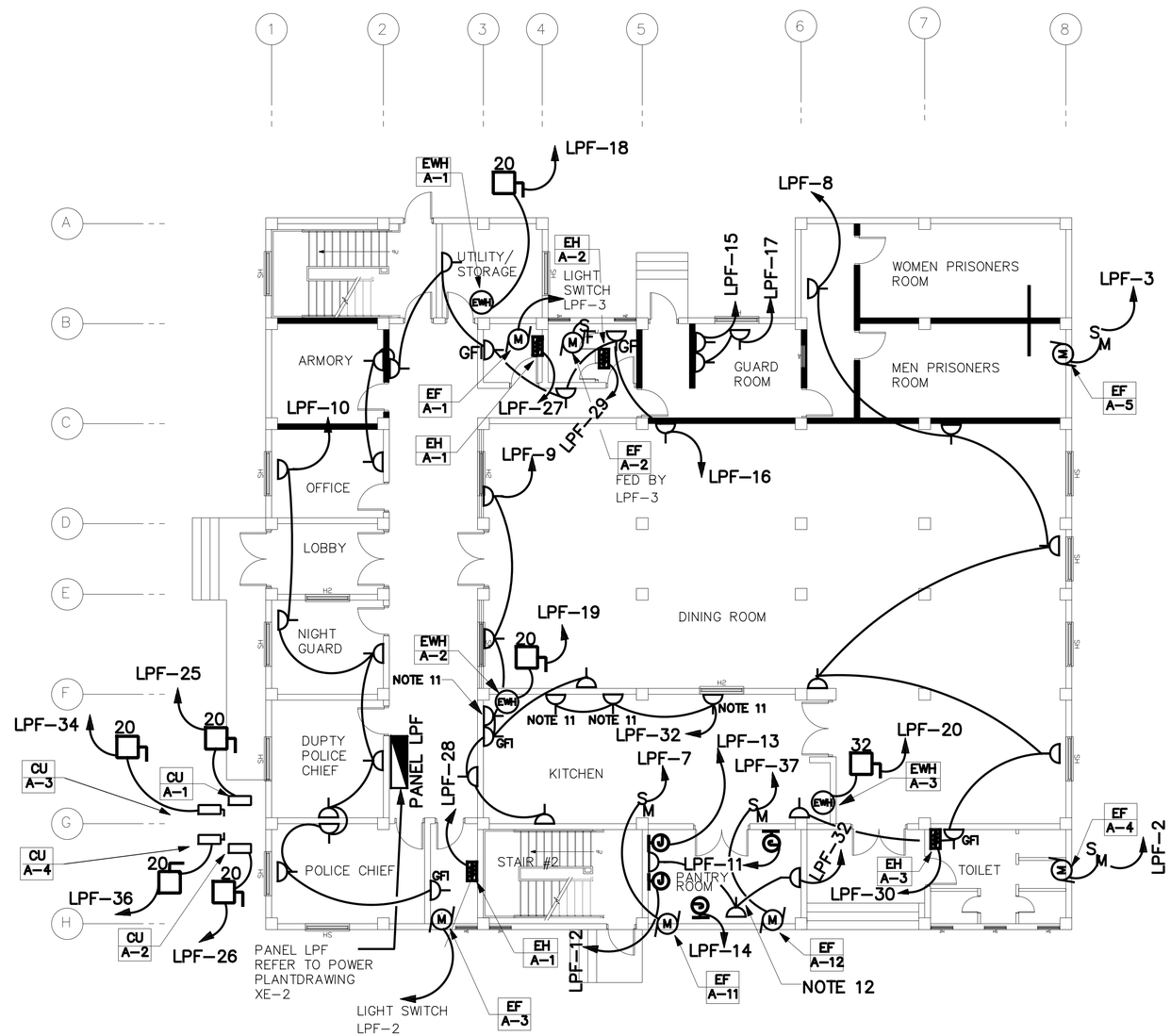

FIRST FLOOR POWER PLAN
SCALE= 1:100

NOTES:

1. FOR LEGEND AND ABBREVIATIONS SEE DRAWING SE-1.

2.COORDINATE LOCATION OF ALL ELECTRICAL FIXTURES AND EQUIPMENT WITH ALL OTHER TRADES.

3. FOR ONE LINE DIAGRAM SEE DRAWING XE- 2, POWER PLANT.

4. ALL WIRING SHALL BE SURFACE MOUNTED IN METAL CONDUIT.

5. FOR EXACT LOCATION OF MECHANICAL EQUIPMENT SEE MECHANICAL DRAWINGS.

6. EXHAUST FANS A-4,,A-6,A-8, AND A-9 SHALL BE CONTROLLED BY MANUAL MOTOR STARTER LOCATED BESIDE EACH EXHAUST FAN 2.4 METER ABOVE FINISHED FLOOR. EXHAUST FAN A-5 SHALL BE CONTROLLED BY A MANUAL MOTOR STARTER SWITCH LOCATED IN THE HALLWAY 112. EXACT LOCATION SHALL BE COORDINATED WITH THE CONTRACTING OFFICER.

7. EXHAUST FANS A-1,A-3, AND A-7 SHALL BE CONTROLLED BY LIGHT SWITCH IN ITS RESPECTIVE ROOM.

8. EXHAUST FAN A-2, AND A-10 SHALL BE CONTROLLED BY LOCAL FAN SWITCH AS SHOWN ON THE DRAWINGS.

9. EXHAUST FAN A-11 AND A-12 SHALL BE CONTROLLED BY A MANUAL MOTOR STARTER .SWITCH LOCATIONS SHALL BE AS SHOWN ON THE DRAWINGS.

10. ALL EXTERIOR DISCONNECT SWITCHES SHALL HAVE NEMA 4 STAINLESS STEEL ENCLOSURE.

11. RECEPTACLES IN THIS AREA TO BE MOUNTED ABOVE THE COUNTER.

12. COORDINATE EXACT LOCATION OF THE JUNCTION BOXES WITH THE CONTRACTING OFFICER.

13. CONTRACTOR SHALL ADD ELECTRICAL RECEPTACLES ON EACH REMAINING WALLS WITHOUT RECEPTACLES IN EACH OFFICE ROOMS.

1 0 1 2 3 4 5 6 7 8 9
1:100

UNLESS OTHERWISE NOTED, LINEAR DIMENSIONS SHOWN ARE IN MILLIMETERS.

SYMBOL	DESCRIPTION	DATE	APP
REVISIONS		19/03/2007	

DESIGNED BY: MM
DWN BY: MM
CHK BY: SE
DATE: 19 January 2009
SUBMITTED BY:
FILE NO.: AF0701 A-EP03PN

US Army Corps of Engineers
Transatlantic Programs Center

AFGHAN NATIONAL POLICE
UP DISTRICT HEADQUARTERS
(2 STORY)
AFGHANISTAN
POLICE HEADQUARTERS
FIRST FLOOR POWER PLAN

SHEET REFERENCE NUMBER:
A
E-3

$DATE$
$FILE$

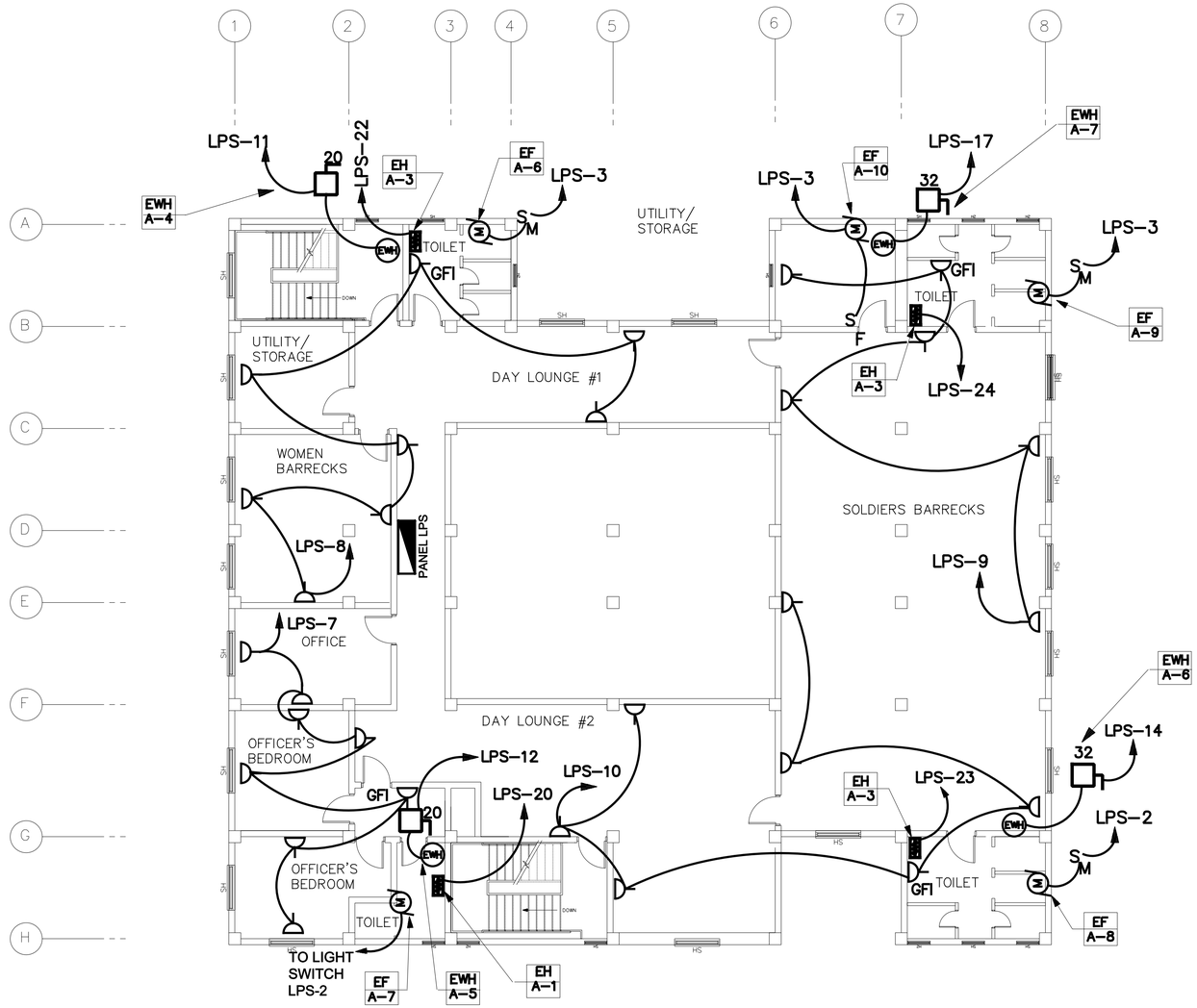

SECOND FLOOR POWER PLAN

SCALE= 1:100

NOTES:

1. FOR LEGEND AND ABBREVIATIONS SEE DRAWING SE-1.

2.COORDINATE LOCATION OF ALL ELECTRICAL FIXTURES AND EQUIPMENT WITH ALL OTHER TRADES.

3. FOR ONE LINE DIAGRAM SEE DRAWING XE- 2, POWER PLANT.

4. ALL WIRING SHALL BE SURFACE MOUNTED IN METAL CONDUIT.

5. FOR EXACT LOCATION OF MECHANICAL EQUIPMENT SEE MECHANICAL DRAWINGS.

6. EXHAUST FANS A-4,A-5,A-6,A-8, AND A-9 SHALL BE CONTROLLED BY MANUAL MOTOR STARTER LOCATED BESIDE EACH EXHAUST FAN 2.4 METER ABOVE FINISHED FLOOR.

7. EXHAUST FANS A-1,A-3, AND A-7 SHALL BE CONTROLLED BY LIGHT SWITCH IN ITS RESPECTIVE ROOM.

8. EXHAUST FAN A-2, A-10, A-11 AND A-12 SHALL BE CONTROLLED BY LOCAL FAN SWITCH.

9. ALL EXTERIOR DISCONNECT SWITCHES SHALL HAVE NEMA 4 STAINLESS STEEL ENCLOSURE.

10. CONTRACTOR SHALL ADD ELECTRICAL RECEPTACLES AT EVERY 3 METERS THROUGHOUT THE FLOOR PLAN. ALSO PROVIDE TWO ADDITIONAL RECEPTACLES IN EACH OFFICE AND OFFICER BEDROOM.

1 0 1 2 3 4 5 6 7 8 9
1:100

UNLESS OTHERWISE NOTED, LINEAR DIMENSIONS SHOWN ARE IN MILLIMETERS.

SYMBOL	DESCRIPTION	DATE	APP
*	REVISIONS	19/03/2007	

DESIGNED BY: MM
DWN BY: MM
CHK BY: SE
DATE: 19 January 2009
SUBMITTED BY:
FILE NO.: AF0701 A-EP04PN

US Army Corps of Engineers
Transatlantic Programs Center

AFGHAN NATIONAL POLICE
UP DISTRICT HEADQUARTERS
(2 STORY)
AFGHANISTAN
POLICE HEADQUARTERS
SECOND FLOOR POWER PLAN

SHEET REFERENCE NUMBER:
A
E-4

$DATE$
$FILE$

NOTES:

1. FOR LEGEND AND ABBREVIATIONS SEE DRAWING SE–1.

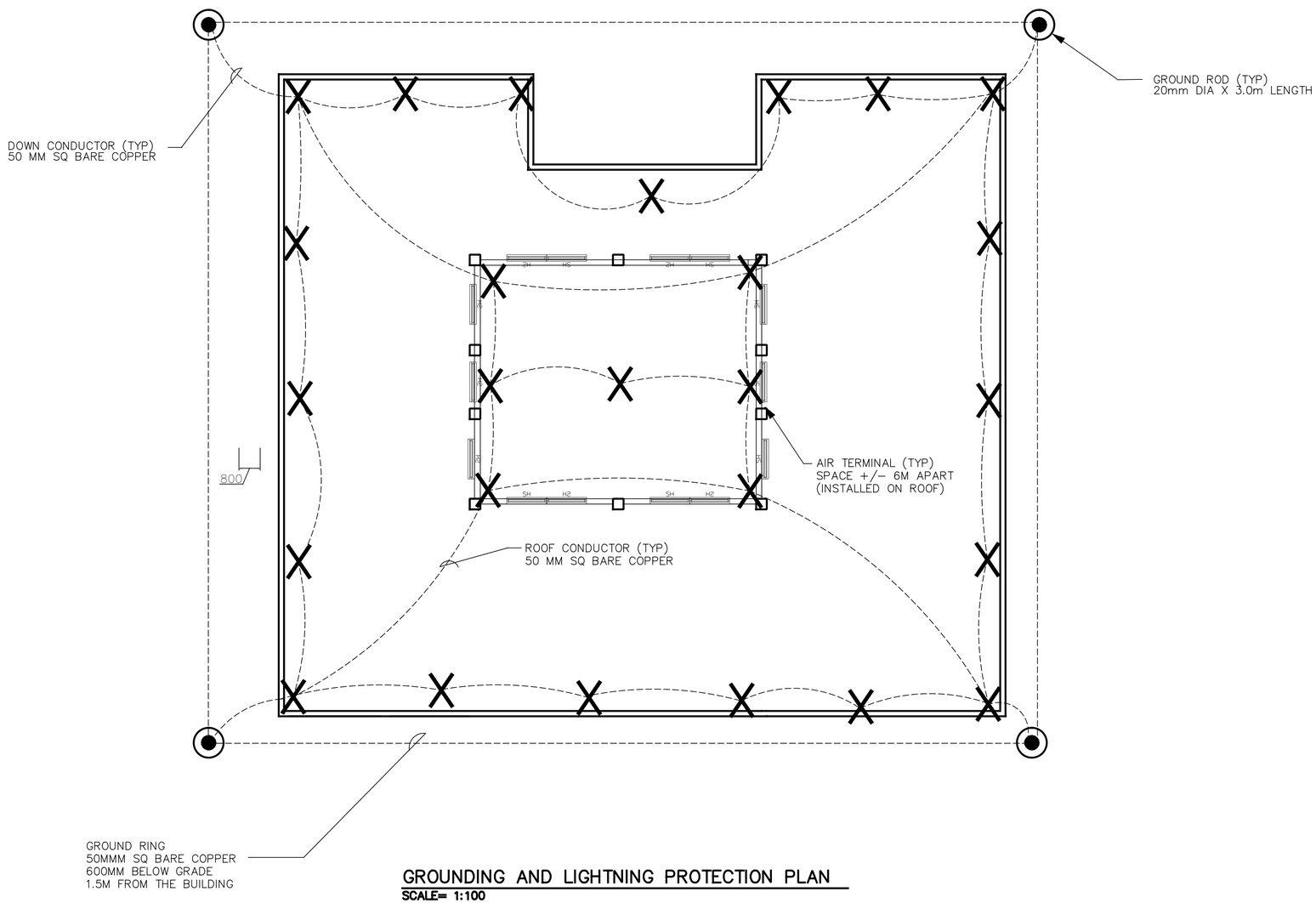

GROUNDING AND LIGHTNING PROTECTION PLAN

SCALE= 1:100

1 0 1 2 3 4 5 6 7 8 9
1:100

UNLESS OTHERWISE NOTED, LINEAR DIMENSIONS SHOWN ARE IN MILLIMETERS.

REVISIONS			
SYMBOL	DESCRIPTION	DATE	APP
		19/03/2007	

DESIGNED BY: MM
DATE: 19 January 2009
DWN BY: MM
SUBMITTED BY:
CHK BY: SE
FILE NO.: AF0701 A–EP05PN

US Army Corps of Engineers
Transatlantic Programs Center

AFGHAN NATIONAL POLICE
UP DISTRICT HEADQUARTERS
(2 STORY)
AFGHANISTAN
POLICE HEADQUARTERS
GROUNDING AND LIGHTNING PROTECTION PLAN

SHEET REFERENCE NUMBER:
A
E–5

$DATE$
$FILE$

PANELBOARD LPF FLUSH MOUNTED MINIMUM 22,000 ASYM. A.I.C. MIN.

_____ AMP. MAIN LUGS (OR) 225 AMP. MAIN BREAKER W/ 225 AMP. TRIP

CIRCUIT BREAKER TYPE 380/220 VOLTS 3 PHASE 4 WIRE 250 AMP. BUS 50 HZ

CKT. NO.	TRIP AMPS	NO. POLES	WIRE MM2	GND MM2	CONDUIT MM	LOAD SERVED	LOAD-V.A. AØ	LOAD-V.A. BØ	LOAD-V.A. CØ	LOAD-V.A. AØ	LOAD-V.A. BØ	LOAD-V.A. CØ	LOAD SERVED	CONDUIT MM	GND MM2	WIRE MM2	NO. POLES	TRIP AMPS	CKT. NO.
1	20	1	4	4	20	LIGHTING & CEILING FAN	3400			3360			LIGHTING & EXHAUST FAN	20	4	4	1	20	2
3	20	1	4	4	20	LGHT,EF,CEILING FAN		3440			650		EXIT AND EMERGENCY LIGHTING	20	4	4	1	20	4
5	20	1	4	4	20	EXTERIOR LIGHTING			500			2000	CEILING FANS	20	4	4	1	20	6
7	20	1	4	4	20	EF-A-11	750			1260			RECEPTACLES	20	4	4	1	20	8
9	20	1	4	4	20	RECEPTACLES		1260			1440		RECEPTACLES	20	4	4	1	20	10
11	20	1	4	4	20	JB FOR REFRIGERATOR/FREEZER			2000			2000	JB FOR REFRIGERATOR/FREEZER	20	4	4	1	20	12
13	20	1	4	4	20	JB FOR REFRIGERATOR/FREEZER	2000			2000			JB FOR REFRIGERATOR/FREEZER	20	4	4	1	20	14
15	20	1	4	4	20	RECEPTACLES CCTV CONSOLE		720			1440		RECEPTACLES	20	4	4	1	20	16
17	20	1	4	4	20	RECEPTACLES,GUARD RM			180			2500	ELECTRIC WATER HEATER A-1	20	4	4	1	20	18
19	20	3	4	4	20	ELECTRIC WATER HEATER-2	2000			4000			ELECTRIC WATER HEATER A-3	25	6	6	3	30	20
21	↓	↓	↓	↓	↓	↓		2000			4000		↓	↓	↓	↓	↓	↓	22
23	↓	↓	↓	↓	↓	↓			2000			4000	↓	↓	↓	↓	↓	↓	24
25	20	1	4	4	20	CU-A-1	750			900			CU-A-2	20	4	4	1	20	26
27	20	1	4	4	20	EH-A-1		750			750		EH-A-1	20	4	4	1	20	28
29	20	1	4	4	20	EH-A-2			1500			3000	EH-A-3	20	4	4	1	20	30
31	150	3	70	50	100	PANEL LPS SECOND FLOOR	21403			540			RECEPTACLES	20	4	4	1	20	32
33	↓	↓	↓	↓	↓	↓		21403			750		CU-A-3	20	4	4	1	20	34
35	↓	↓	↓	↓	↓	↓			21403			900	CU-A-4	20	4	4	1	20	36
37	20	1	4	4	20	EF-A-12	250						SPARE				1	20	38
39	20	1				SPARE							SPARE				1	20	40
41	20	1				SPARE							SPARE				1	20	42
							30553	32326	27583	12060	9030	14400							

TOTAL CONN. LOAD 125.94 KVA. 80 % DEMAND = ESTIMATED DEMAND LOAD: 100.75 kVA

TOTAL CONN. LOAD PER PHASE (KVA): AØ 42.61 BØ 41.35 CØ 41.98

SUPPLIED FROM POWER PLANT SWITCHBOARD(PPSB)

NOTES:

1. FOR LEGEND AND ABBREVIATIONS SEE DRAWING SE-6.
2. CONTRACTOR SHALL CONFIRM THAT ALL CIRCUIT RATINGS ARE BASED ON THE ACTUAL NAMEPLATE OF THE SUPPLIED EQUIPMENT.

UNLESS OTHERWISE NOTED, LINEAR DIMENSIONS SHOWN ARE IN MILLIMETERS.

REVISIONS			
*	SYMBOL	DESCRIPTION	DATE	APP
			19/03/2007	

DESIGNED BY: MM
DWN BY: MM
CHK BY: SE
DATE: 19 January 2009
SUBMITTED BY:
FILE NO.: AF0701 A-EP08SC

US Army Corps of Engineers
Transatlantic Programs Center

AFGHAN NATIONAL POLICE
UP DISTRICT HEADQUARTERS
(2 STORY)
AFGHANISTAN
POLICE HEADQUARTERS
PANEL SCHEDULES

SHEET REFERENCE NUMBER:
A
E-6

$DATE$
$FILE$

PANELBOARD LPS FLUSH MOUNTED MINIMUM 22,000 ASYM. A.I.C. MIN.

_____ AMP. MAIN LUGS (OR) 150 AMP. MAIN BREAKER W/ 100 AMP. TRIP

CIRCUIT BREAKER TYPE 380/220 VOLTS 3 PHASE 4 WIRE 150 AMP. BUS 50 HZ

CKT. NO.	TRIP AMPS	NO. POLES	WIRE MM2	GND MM2	CONDUIT MM	LOAD SERVED	LOAD–V.A. A0	LOAD–V.A. B0	LOAD–V.A. C0	LOAD–V.A. A0	LOAD–V.A. B0	LOAD–V.A. C0	LOAD SERVED	CONDUIT MM	GND 2 MM	WIRE 2 MM	NO. POLES	TRIP AMPS	CKT. NO.
1	20	1	4	4	20	LIGHTING & CEILING FAN	3500			3510			LIGHTING, EXHAUST FAN &EF	20	4	4	1	20	2
3	20	1	4	4	20	LGHT,EF,CEILING FAN		3540			400		EXIT AND EMERGENCY LIGHTING	20	4	4	1	20	4
5	20	1	4	4	20	LIGHTING FIXTURE TYPE D			1200			3300	CEILING FANS	20	4	4	1	20	6
7	20	1	4	4	20	RECEPTACLES	1440			1440			RECEPTACLES	20	4	4	1	20	8
9	20	1	4	4	20	RECEPTACLES		1080			1260		RECEPTACLES	20	4	4	1	20	10
11	20	3	4	4	20	EWH–A–4			1333			2000	EWH–A–5	20	4	4	1	20	12
13	↓	↓	↓	↓	↓	↓	1333			4000			EWH–A–6	25	6	6	3	30	14
15	↓	↓	↓	↓	↓	↓		1333			4000		↓	↓	↓	↓	↓	↓	16
17	30	3	6	6	25	ELECTRIC WATER HEATER A–7			4000			4000	↓	↓	↓	↓	↓	↓	18
19	↓	↓	↓	↓	↓	↓	4000			2000			ELECTRIC HEAT A–1	20	4	4	1	20	20
21	↓	↓	↓	↓	↓	↓		4000			3000		ELECTRIC HEAT A–3	20	4	4	1	20	22
23	20	1	4	4	20	EWH–A–3			3000			3000	ELECTRIC HEAT A–3	20	4	4	1	20	24
25	20	1				SPARE							SPARE				1	20	26
27	20	1				SPARE							SPARE				1	20	28
29	20	1				SPARE							SPARE				1	20	30
31						SPACE							SPACE						32
33						SPACE							SPACE						34
35						SPACE							SPACE						36
37						SPACE							SPACE						38
39						SPACE							SPACE						40
41						SPACE							SPACE						42
							10273	9953	9533	12222	9932	12300							

TOTAL CONN. LOAD 64.21 KVA. 60 % DEMAND = ESTIMATED DEMAND LOAD: 38.52 kVA

TOTAL CONN. LOAD PER PHASE (KVA): A0 22.50 B0 19.88 C0 21.83

SUPPLIED FROM PANEL LPF ON FIRST FLOOR

NOTES:

1. FOR LEGEND AND ABBREVIATIONS SEE DRAWING E–6.
2. CONTRACTOR SHALL CONFIRM THAT ALL CIRCUIT RATINGS ARE BASED ON THE ACTUAL NAMEPLATE OF THE SUPPLIED EQUIPMENT.
3. CABLING FOR CCTV SYSTEM SHALL BE PER MANUFACTURER'S RECOMMENDATION.

UNLESS OTHERWISE NOTED, LINEAR DIMENSIONS SHOWN ARE IN MILLIMETERS.

*	REVISIONS	19/03/2007	ASB
	SYMBOL	DESCRIPTION	DATE

DESIGNED BY: MM
DATE: 19 January 2009
DWN BY: MM
SUBMITTED BY:
CHK BY: SE
FILE NO.: AF0701 A–EP07SC

US Army Corps of Engineers
Transatlantic Programs Center

AFGHAN NATIONAL POLICE
UP DISTRICT HEADQUARTERS
(2 STORY)
AFGHANISTAN
POLICE HEADQUARTERS

PANEL SCHEDULES

SHEET REFERENCE NUMBER:
A
E–7

$DATE$
$FILE$

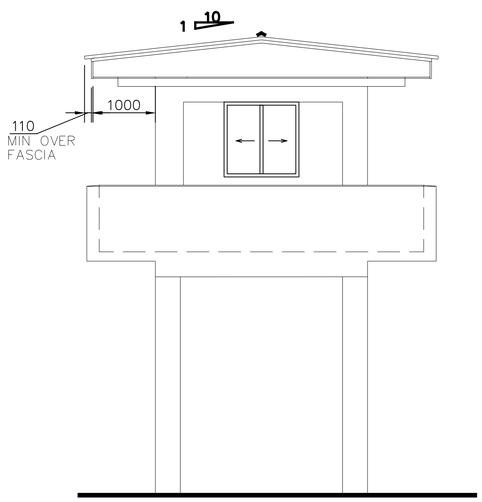

ELEVATION
SCALE=1:50
3
A-1 A-1

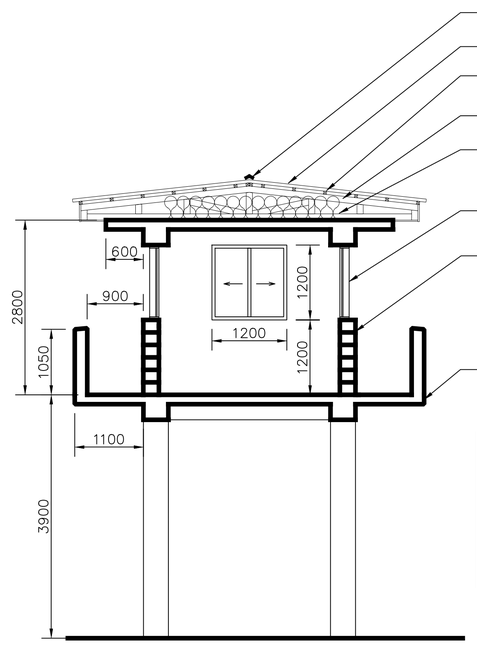

SECTION
SCALE=1:50
2
A-1 A-1

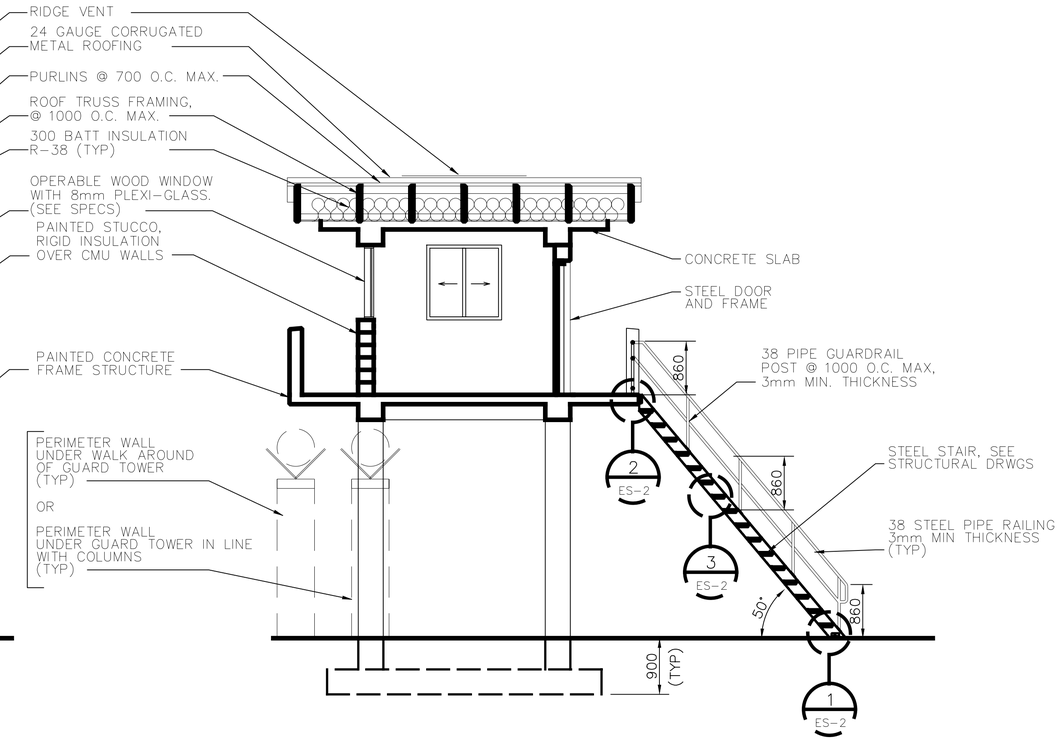

SECTION
SCALE=1:50
1
A-1 A-1

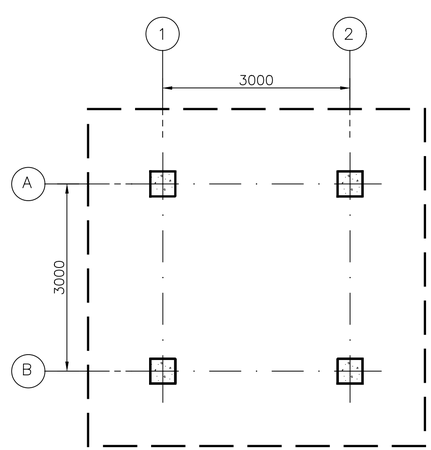

GROUND LEVEL PLAN
SCALE=1:50

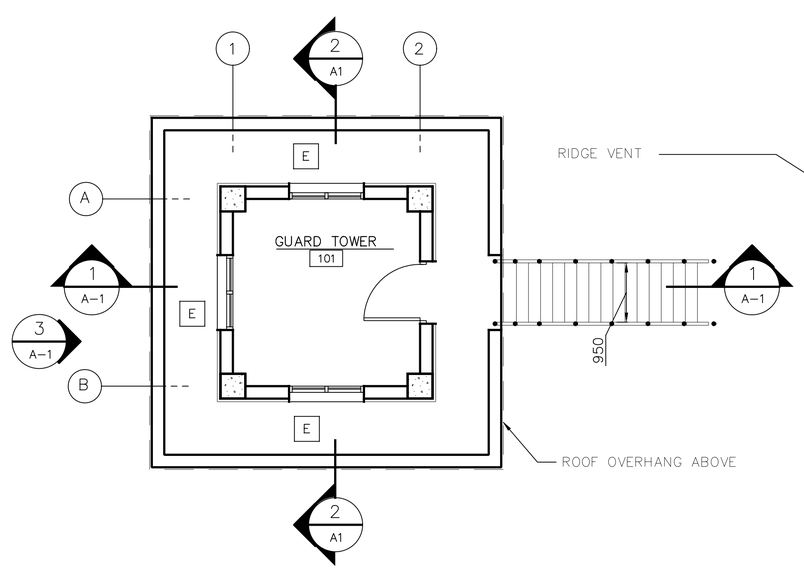

FIRST FLOOR PLAN
SCALE=1:50

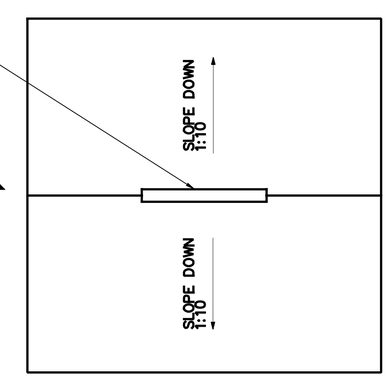

ROOF PLAN
SCALE=1:50

UNLESS OTHERWISE NOTED, LINEAR DIMENSIONS SHOWN ARE IN MILLIMETERS.

SYMBOL	DESCRIPTION	DATE	APP
REVISIONS		03/04/2007	

DESIGNED BY: HMH
DATE: 19 January 2009
DWN BY: HMH
SUBMITTED BY: PHILIP L. DINELLO, Center POT FACILITIES DEV.
CHK BY:
FILE NO.: AF0701 E-AR01PN

US Army Corps of Engineers
Transatlantic Programs Center

AFGHAN NATIONAL POLICE
UP DISTRICT HEADQUARTERS
(2 STORY)
AFGHANISTAN
GUARD TOWER
FLOOR PLANS AND ELEVATIONS

SHEET REFERENCE NUMBER:
E
A-1

$DATE$
$FILE$

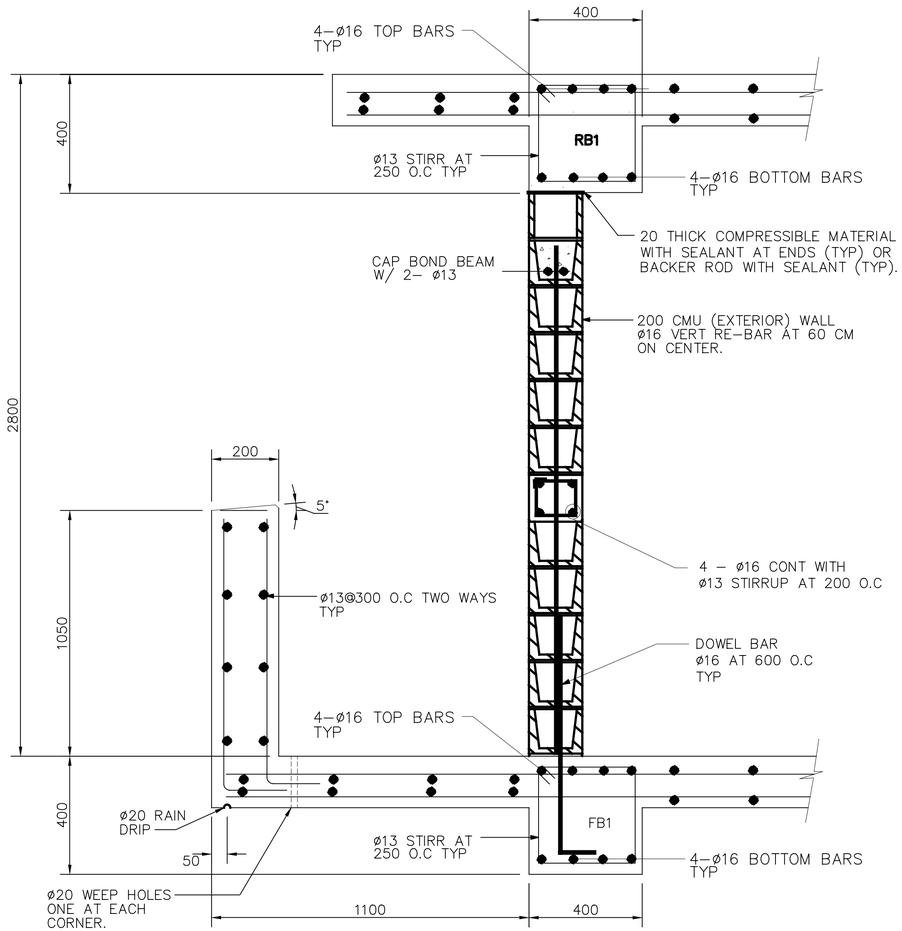

DETAIL "A"

NOT TO SCALE

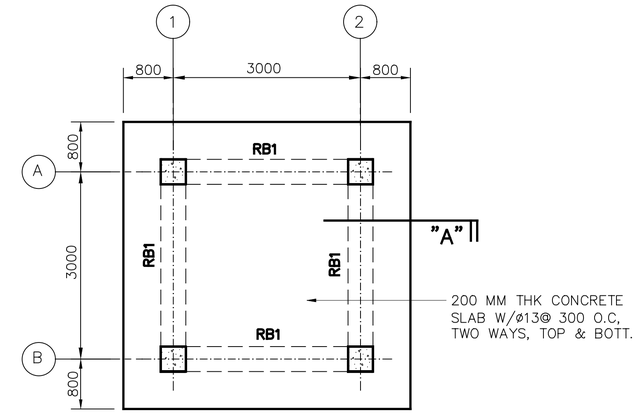

ROOF FRAMING PLAN

SCALE= 1:50

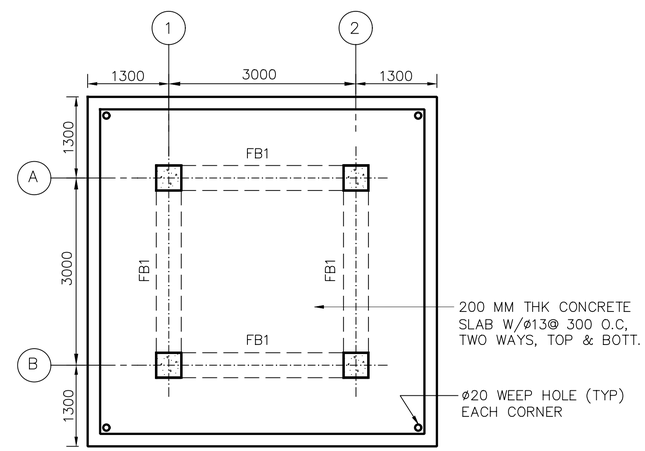

FIRST FLOOR PLAN

SCALE= 1:50

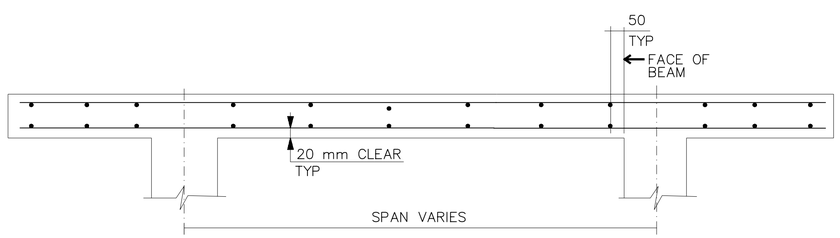

TYPICAL SECTIONS FOR STRUCTURAL SLABS

NOT TO SCALE

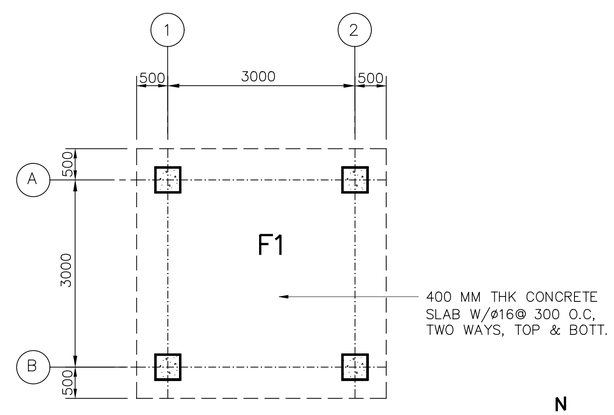

FOUNDATION AND SLAB PLAN

SCALE= 1:50

N

PLAN NORTH

GENERAL NOTES

1. DESIGN LOADS (SERVICE)

   LIVE LOADS:

   ROOF: 1.0 KPA (20 PSF)
   OTHERS: 4.8 KPA (100 PSF)
   8.9 KN (2.0 K) CONCENTRATED LOAD

   WIND LOADS PER IBC–2003

   USING A "3–SECOND" WIND VELOCITY OF 125 KPH EXPOSURE C AND IMPORTANCE FACTOR I=1.0

   EARTHQUAKE LOADS PER IBC–2003:

   USING A SEISMICITY: Ss=1.65g AND S_1=0.75g

2. MATERIALS:

   CONCRETE: 28 MPa (4 KSI)
   CYLINDER STRENGTH AT 28 DAYS

   REINFORCING: ASTM A615 GRADE 60 (60 KSI)

   WELDED WIRE FABRIC: ASTM A185

   CONCRETE MASONRY UNITS:
   ASTM C90, TYPE I (NORMAL WEIGHT, MOISTURE CONTROLLED) MORTAR, ASTM C270, TYPE S
   GROUT, ASTM C 476
   JOINT REINFORCEMENT, LADDER TYPE

3. WORK THESE STRUCTURAL DRAWINGS WITH THE STANDARD–DETAILS DRAWINGS.

4. A RELATIVE (DATUM) FINISH FLOOR ELEVATION EQUAL TO 100.00 M. IS USED AS REFERENCE ELEVATION FOR ALL STRUCTURAL DRAWINGS. REFER TO CIVIL DRAWINGS FOR ACTUAL FINISH ELEVATIONS.

5. FOUNDATIONS ARE DESIGNED USING AN ALLOWABLE BEARING PRESSURE OF 0.75 KG/SQ. CM (1500 PSF), AND BOTTOM OF FOOTINGS ARE PLACED AS SHOWN ON DRAWINGS. GEOTECHNICAL INVESTIGATION SHALL CONFIRM BEARING CAPACITY TO BE NO LESS THAN 0.75 KG/SQ CM. IF GEOTECHNICAL INVESTIGATION SHOWS LESS THAN 0.75 KG/SQ CM THE CONTRACTOR SHALL REDESIGN FOOTINGS BASED ON THE GEOTECHNICAL INVESTIGATION. SEE SPECIFICAITON 01015 PARAGRAPH, GEOTECHNICAL, FOUNDATION AND SURVEY.

CRITICAL NOTES

1. ALL CELLS OF CMU WALL SHALL BE FULLY GROUTED AND PROVIDE 16 MM RE–BARS AT 60 CM ON CENTER.

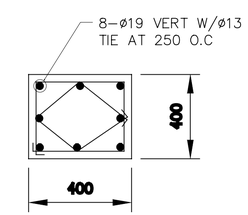

TYP COLUMN REINFORCING DET

1 0 1 2 3 4
1:50

UNLESS OTHERWISE NOTED, LINEAR DIMENSIONS SHOWN ARE IN MILLIMETERS.

REVISIONS			
*		19/03/2007	ASB
		03/04/2007	DATE
SYMBOL	DESCRIPTION		

DESIGNED BY: JK
DATE: 19 January 2009
DWN BY: JK/NWH
SUBMITTED BY: PHILIP L. DINELLO, CENTER PDT FACILITIES DEV
CHK BY: JK
FILE NO.: AF0701 E–S801PN

US Army Corps of Engineers
Transatlantic Programs Center

AFGHAN NATIONAL POLICE
UP DISTRICT HEADQUARTERS
(2 STORY)
GUARD TOWER
AFGHANISTAN
FOUNDATION AND SLAB PLAN
ROOF FRAMING PLAN

SHEET REFERENCE NUMBER:
E
S–1

$DATE$
$FILE$

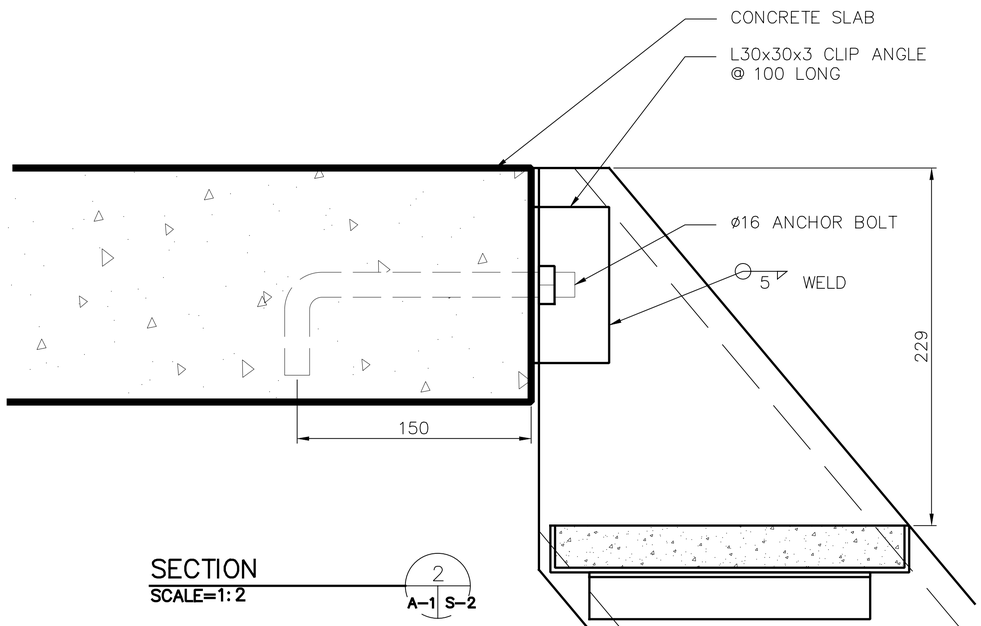

SECTION 2 A–1 S–2
SCALE=1:2

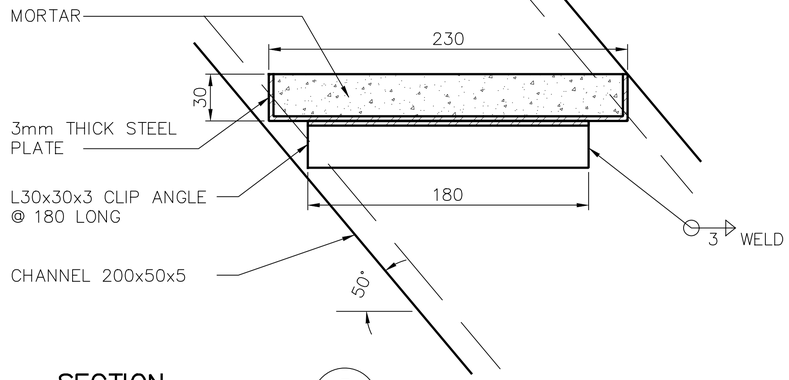

SECTION 3 A–1 S–2
SCALE=1:2

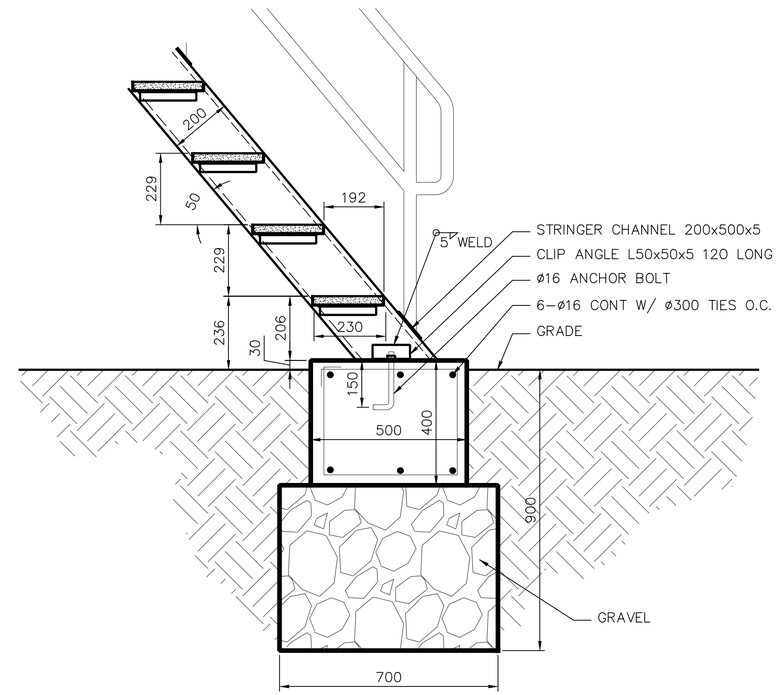

SECTION 1 A–1 S–2
SCALE=1:10

UNLESS OTHERWISE NOTED, LINEAR DIMENSIONS SHOWN ARE IN MILLIMETERS.

REVISIONS			
SYMBOL	DESCRIPTION	DATE	APP
		19/03/2007	
		03/04/2007	

DESIGNED BY: JK
DWN BY: JK/HMH
CHK BY: JK
DATE: 19 January 2009
SUBMITTED BY: PHILIP L. DINELLO
Center, PDT FACILITIES DEV.
FILE NO.: AF0701 E-S8020T

US Army Corps of Engineers
Transatlantic Programs Center

AFGHAN NATIONAL POLICE
UP DISTRICT HEADQUARTERS
(2 STORY)
GUARD TOWER
AFGHANISTAN
FOOTING DETAILS

SHEET REFERENCE NUMBER:
E
S–2

$DATE$
$FILE$

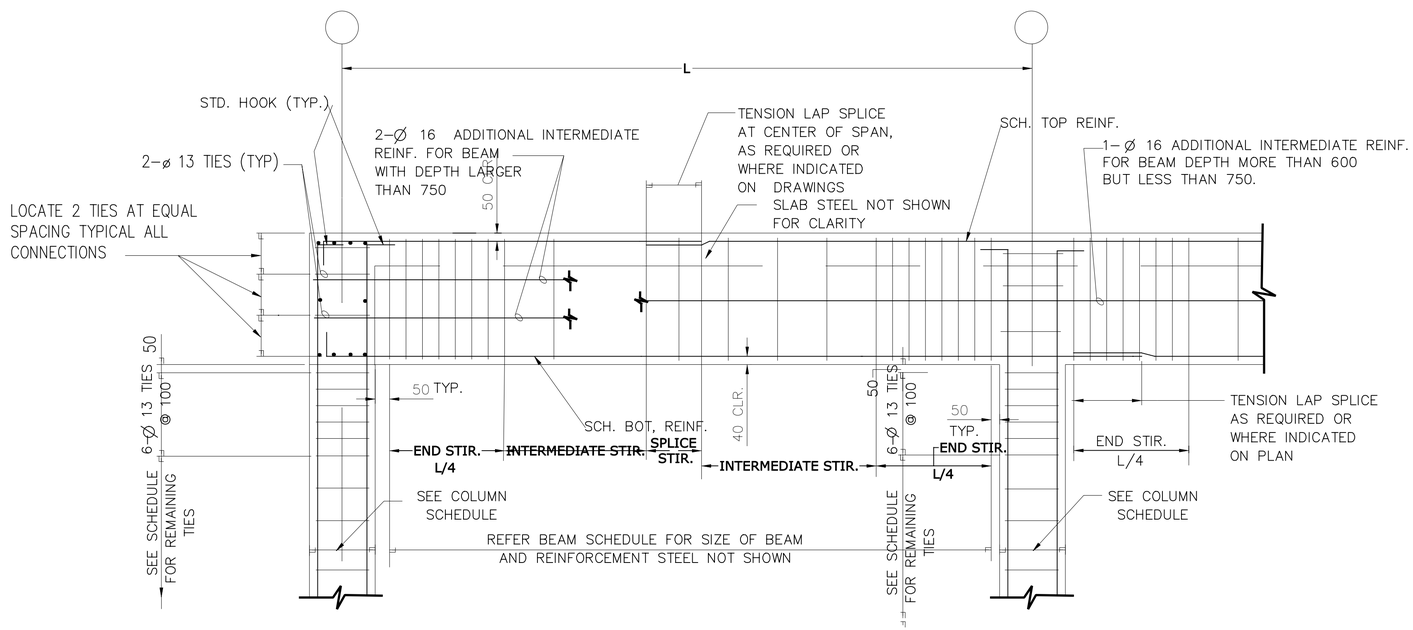

TYPICAL BEAM TO COLUMN END CONNECTION

DETAIL B S-3 S-3
SCALE=N.T.S.

TYPICAL BEAM TO COLUMN INTERIOR CONNECTION

DETAIL C S-3 S-3
SCALE=N.T.S.

UNLESS OTHERWISE NOTED, LINEAR DIMENSIONS SHOWN ARE IN MILLIMETERS.

SYMBOL	REVISIONS	DESCRIPTION	DATE	APP
1			19/03/2007	
2			03/04/2007	

DESIGNED BY: RG
DWN BY: TCP
CHK BY: KGO
DATE: 19 January 2009
SUBMITTED BY: PHILIP L. DINELLO Chief, PCX FACILITIES DEV.
FILE NO.: AF0701 E-SF030T

US Army Corps of Engineers
Transatlantic Programs Center

AFGHAN NATIONAL POLICE
UP DISTRICT HEADQUARTERS
(2 STORY)
GUARD TOWER
AFGHANISTAN
SLAB-ON-GRADE DETAILS

SHEET REFERENCE NUMBER:
E
S-3

$DATE$
$FILE$

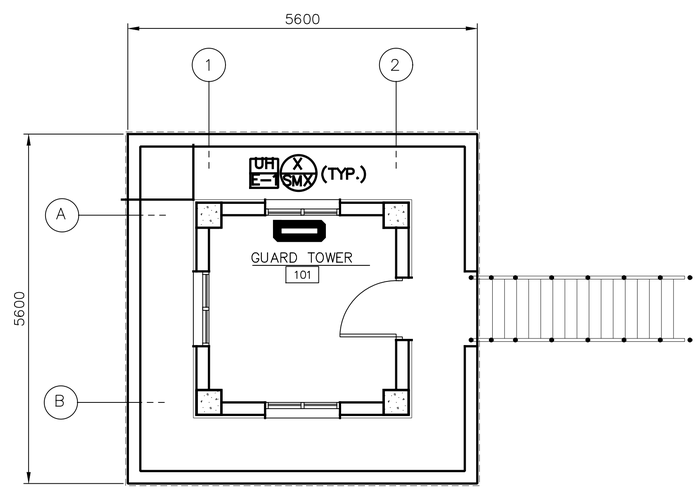

HVAC PLAN
SCALE: 1:50

UNLESS OTHERWISE NOTED, LINEAR DIMENSIONS SHOWN ARE IN MILLIMETERS.

SYMBOL	DESCRIPTION	DATE	APP

DESIGNED BY: RMS
DWN BY: RMS
CHK BY: SE
DATE: 19 January 2009
SUBMITTED BY:
FILE NO.: AF0701 E-MH01PN

US Army Corps of Engineers
Transatlantic Programs Center

AFGHAN NATIONAL POLICE
UP DISTRICT HEADQUARTERS
(2 STORY)
GUARD TOWER
AFGHANISTAN

HVAC PLAN

SHEET REFERENCE NUMBER:
E
M-1

AF0701E-MH01PN.DWG
4/3/2007 8:42 AM
AED, AED, USACE
$DATE$
$FILE$

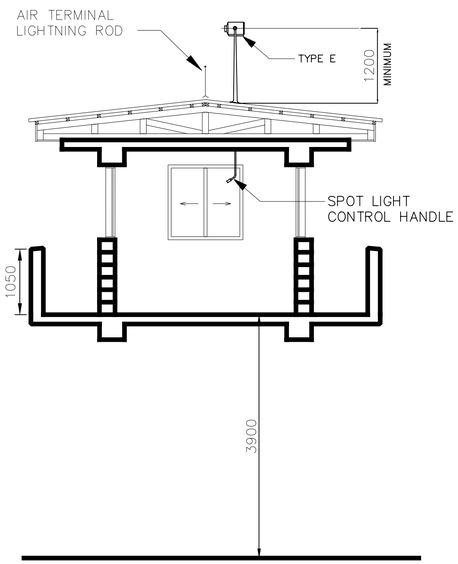

SPOTLIGHT MOUNTING DETAIL

NOT TO SCALE

NOTES:

1. FOR LEGEND, ABBREVIATIONS AND LIGHT FIXTURE SCHEDULE SEE DRAWING SE–1.
2. COORDINATE LOCATION OF ALL ELECTRICAL DEVICES AND EQUIPMENT WITH ALL OTHER TRADES.
3. ALL WIRING SHALL BE IN CONCEALED OR SURFACE MOUNTED METAL CONDUIT.
4. PLAN IS TYPICAL FOR ALL GUARD TOWERS 1–4. GUARD TOWERS #1, 3, & 4 ARE POWERED FROM PPSB. GUARD TOWER #2 IS POWERED FROM THE GUARD HOUSE PANEL LC"D", SEE GUARD HOUSE PANEL SCHEDULE DRAWING E–1.
5. FOR GROUNDING ROD ACCESS BOX DETAIL SEE SHEET SE–3.
6. PROVIDE 50 METAL C WITH TWO 16mm^2 COPPER CONDUCTORS AND 16mm^2 COPPER GROUNDING CONDUCTOR TO JUNCTION BOX. FOR JUNCTION BOX DETAIL SEE SHEET SE–5.
7. FOR CONTINUATION TO SECONDARY DISTRIBUTION SYSTEM SEE DRAWINGS XE–1 AND XE–2.
8. PROVIDE A MANUFACTURER SUPPLIED RED, BLUE, AND BLACK LIGHT FIXTURE GLOBE.
9. PROVIDE SCH 80 PVC 25mm C STUBBED OUT 1.5M BEYOND GUARD TOWER FOUNDATION AND 600 BFG TO BE TIED INTO SITE COMM CH AND DIRECT BURIED DUCT SYSTEM.

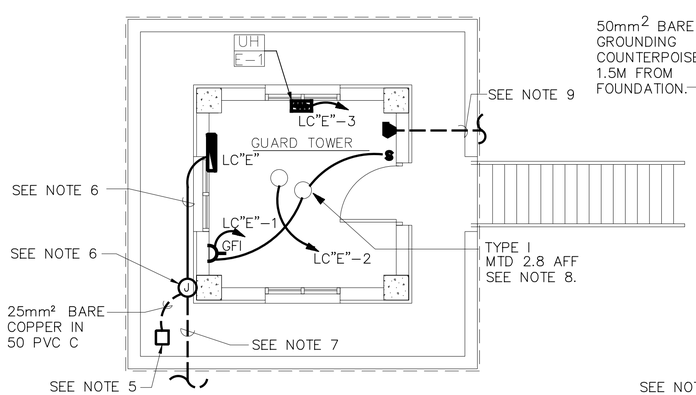

LIGHTING & POWER

NOT TO SCALE

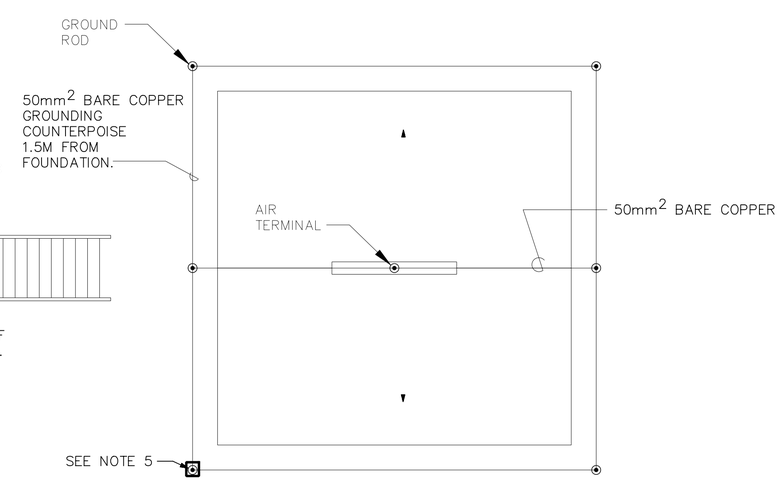

GROUNDING SYSTEM

NOT TO SCALE

LOAD CENTER "E" GUARD TOWER #1, 2, 3, & 4

40 AMP MAIN CIRCUIT BREAKER, 220V, 1 PH, 2W, 50 HZ, 100A BUS, 10000 AIC

CKT. NO.	TRIP AMPS	NO. POLES	WIRE MM^2	GND MM^2	CONDUIT MM	LOAD SERVED	LOAD-V.A.
1	20	1	4	4	20	LIGHTING & RECEPTACLES	280
2	20	1	4	4	20	SPOT LIGHT, 1000W	1000
3	25	1	6	6	20	ELECT.HEAT GUARD SHACK#2	4000
4	20	1				SPARE	500
5	20	1				SPARE	500
6						SPACE	
7						SPACE	
8						SPACE	
						TOTAL CONN. LOAD	6280

TOTAL CONN. LOAD 6.3 KVA.

100 %DEMAND = EST. DEMAND LOAD: 6.3 SERVED FROM: PPSB

UNLESS OTHERWISE NOTED, LINEAR DIMENSIONS SHOWN ARE IN MILLIMETERS.

REVISIONS			
SYMBOL	DESCRIPTION	DATE	APP
		03/04/2007	

DESIGNED BY: MM
DWN BY: MM
CHK BY: SE
DATE: 19 January 2009
SUBMITTED BY:
FILE NO.: AF0701 E_EL01PN

US Army Corps of Engineers
Transatlantic Programs Center

AFGHAN NATIONAL POLICE
UP DISTRICT HEADQUARTERS
(2 STORY)
GUARD TOWER
AFGHANISTAN

LIGHTING & POWER PLAN

SHEET REFERENCE NUMBER:
E
E–1

$DATE$
$FILE$

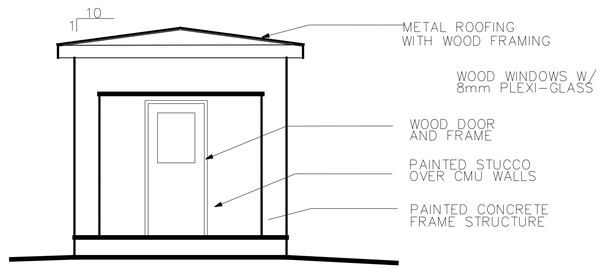

ELEVATION
SCALE=1:50

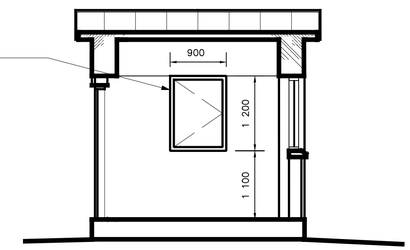

SECTION
SCALE=1:50

GENERAL NOTES:

1. ALL CMU WALLS AND CEILINGS SHALL BE PLASTERED AND PAINTED.
2. CONTRACTOR SHALL CONFIGURE THE METAL ROOFING AS SHOWN AND CONSTRUCT WITH APPROPRIATE WOOD FRAMING.
3. FLOOR SHALL BE SEALED CONCRETE.

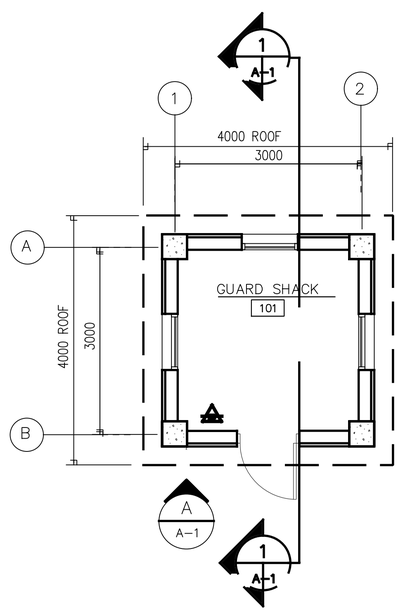

FIRST FLOOR PLAN
SCALE=1:50

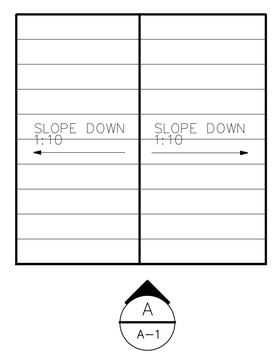

ROOF PLAN
SCALE=1:50

PROVIDE PORTABLE FIRE EXTINGUISHERS, ABC DRY CHEMICAL 4A:60B:C

UNLESS OTHERWISE NOTED, LINEAR DIMENSIONS SHOWN ARE IN MILLIMETERS.

REVISIONS				
*	SYMBOL	DESCRIPTION	DATE	APP
			19/03/2007	

DESIGNED BY: S. Hanna
DATE: 19 January 2009
DWN BY: S. Hanna
SUBMITTED BY: PHILIP L. DINELLO, Center POT Facilities DEV
CHK BY: CHECK_BY
FILE NO.: AF0701 F-AR01PN

US Army Corps of Engineers
Transatlantic Programs Center

AFGHAN NATIONAL POLICE
UP DISTRICT HEADQUARTERS
(2 STORY)
AFGHANISTAN
GUARD SHACK
FLOOR PLANS AND ELEVATIONS

SHEET REFERENCE NUMBER:
F
A-1

$DATE$
$FILE$

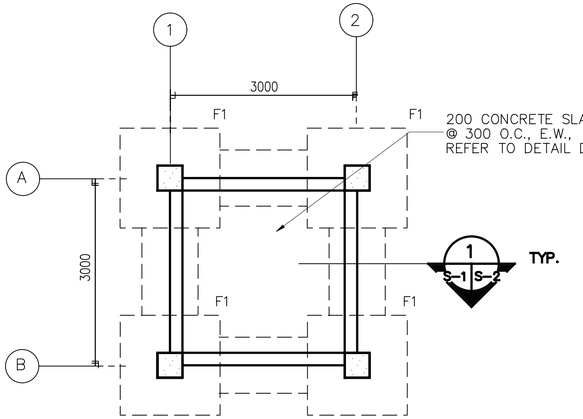

FOUNDATION AND SLAB PLAN

SCALE=1:50

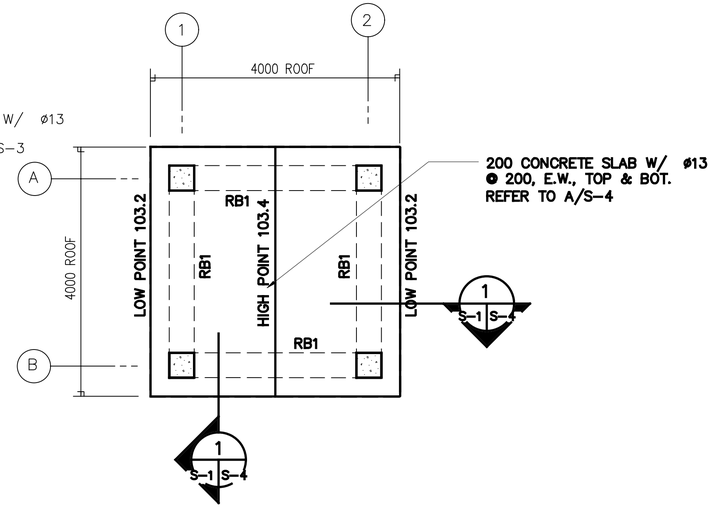

ROOF PLAN

SCALE=1:50

1. DESIGN LOADS (SERVICE)

LIVE LOADS:

ROOF: 1.0 KPA (20 PSF)
OTHERS: 4.8 KPA (100 PSF)
8.9 KN (2.0 K) CONCENTRATED LOAD

WIND LOADS PER IBC–2003

USING A "3–SECOND" WIND VELOCITY OF 125 KPH (78 MPH), EXPOSURE C AND IMPORTANCE FACTOR I=1.0

EARTHQUAKE LOADS PER IBC–2003:

USING A SEISMICITY: Ss=1.65g AND S_1=0.75g

2. MATERIALS:

CONCRETE: 28 MPa (4 KSI)
CYLINDER STRENGTH AT 28 DAYS

REINFORCING: ASTM A615 GRADE 60 (60 KSI)

WELDED WIRE FABRIC: ASTM A185

CONCRETE MASONRY UNITS:
ASTM C90, TYPE I (NORMAL WEIGHT, MOISTURE CONTROLLED) MORTAR, ASTM C270, TYPE S
GROUT, ASTM C 476
JOINT REINFORCEMENT, LADDER TYPE

3. WORK THESE STRUCTURAL DRAWINGS WITH THE STANDARD–DETAILS DRAWINGS.

4. A RELATIVE (DATUM) FINISH FLOOR ELEVATION EQUAL TO 100.00 M. IS USED AS REFERENCE ELEVATION FOR ALL STRUCTURAL DRAWINGS. REFER TO CIVIL DRAWINGS FOR ACTUAL FINISH ELEVATIONS.

5. FOUNDATIONS ARE DESIGNED USING AN ALLOWABLE BEARING PRESSURE OF 0.75 KG/SQ. CM (1500 PSF), AND BOTTOM OF FOOTINGS ARE PLACED AS SHOWN ON DRAWINGS. GEOTECHNICAL INVESTIGATION SHALL CONFIRM BEARING CAPACITY TO BE NO LESS THAN 0.75 KG/SQ CM. IF GEOTECHNICAL INVESTIGATION SHOWS LESS THAN 0.75 KG/SQ CM THE CONTRACTOR SHALL REDESIGN FOOTINGS BASED ON THE GEOTECHNICAL INVESTIGATION. SEE SPECIFICAITON 01015 PARAGRAPH, GEOTECHNICAL, FOUNDATION AND SURVEY.

1 0 1 2 3 4
1:50

UNLESS OTHERWISE NOTED, LINEAR DIMENSIONS SHOWN ARE IN MILLIMETERS.

*	REVISIONS			
SYMBOL	DESCRIPTION	DATE	APP	
		19/03/2007		

DESIGNED BY: RG
DATE: 19 January 2009
DWN BY: TCP
SUBMITTED BY: PHILIP L. DINELLO, Center PDT FACILITIES DEV.
CHK BY: KGO
FILE NO.: AF0701 F–S801PN

US Army Corps of Engineers
Transatlantic Programs Center

AFGHAN NATIONAL POLICE
UP DISTRICT HEADQUARTERS
(2 STORY)
AFGHANISTAN
GUARD SHACK
FOUNDATION AND SLAB PLAN
ROOF FRAMING PLAN

SHEET REFERENCE NUMBER:
F
S–1

$DATE$
$FILE$

FOOTING SCHEDULE

NOTE:
REFER TO A/S-2 FOR TYPICAL SECTION OF FOOTINGS.

MARK	CONCRETE DIMENSIONS			REINFORCEMENT		FTG. BOTTOM EL. METERS	REMARKS
	WIDTH	LENGTH	THICKNESS	TOP	BOTTOM		
F1	1600	1600	300	——	5– ø 16 E.W.		

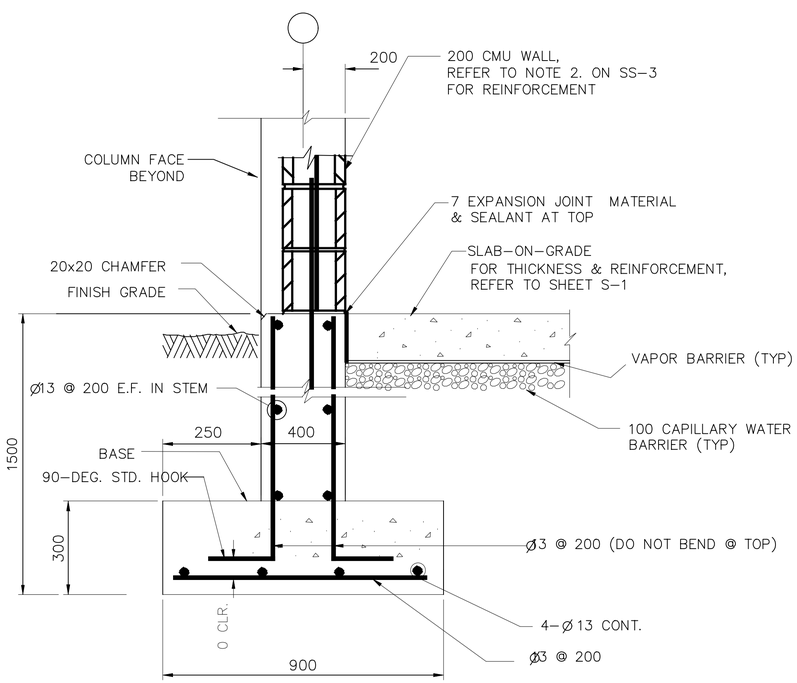

TYPICAL WALL FOOTING

SECTION 1 S-1 S-2
SCALE=N.T.S.

NOTES:
1. HORIZONTAL STEM WALL AND FOOTING REINFORCEMENTS ARE CONTINUOUS THROUGH COLUMN AND COLUMN FOOTING
2. AT DISCONTINUOUS STEM WALL BARS TERMINATE WITH STANDARD HOOK IN COLUMN. FOOTING BARS TERMINATE WITH 600 MM EMBEDMENT IN COLUMN FOOTING.
3. REFER TO CIVIL DWGS FOR ACTUAL FINISH FLOOR ELEVATIONS.

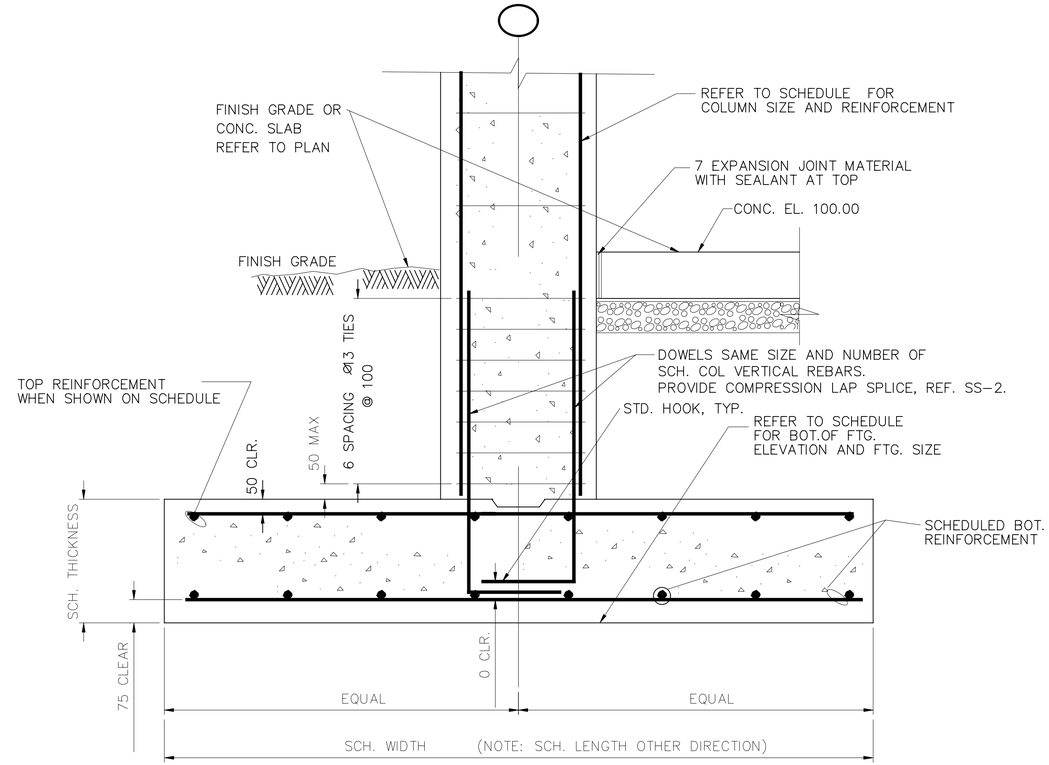

TYPICAL COLUMN FOOTING

DETAIL A S-2 S-2
SCALE=N.T.S.

UNLESS OTHERWISE NOTED, LINEAR DIMENSIONS SHOWN ARE IN MILLIMETERS.

SYMBOL	DESCRIPTION	DATE	APP
		19/03/2007	

REVISIONS

DESIGNED BY: RG
DWN BY: TCP
CHK BY: KGO
DATE: 19 January 2009
SUBMITTED BY: PHILIP L. DINELLO, Center Pol Facilities Dev
FILE NO.: AF0701 F-S802DT

US Army Corps of Engineers
Transatlantic Programs Center

AFGHAN NATIONAL POLICE
UP DISTRICT HEADQUARTERS
(2 STORY)
AFGHANISTAN
GUARD SHACK
FOOTING DETAILS

SHEET REFERENCE NUMBER:
F
S-2

$DATE$
$FILE$

COLUMN SCHEDULE

NOTES: 1. REFER TO DETAILS B&C/S-3 AND A/S-2 FOR TYPICAL COLUMN DETAILS.

COLUMN GRIDS	COLUMN TYPE	CONCRETE DIMENSIONS		VERTICAL REINFORCEMENT	TIE REINFORCEMENT	
		WIDTH	DEPTH		SIZE	SPACING
A-1, A-2 B-1, B-2	C1	400	400	8-ø 16	ø10	300

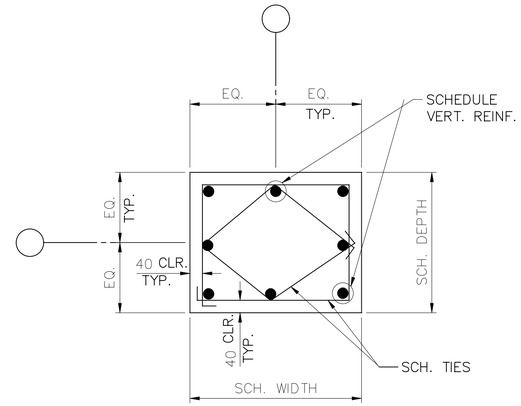

C1

COLUMN TYPE

DETAIL A S-3 S-3
SCALE=N.T.S.

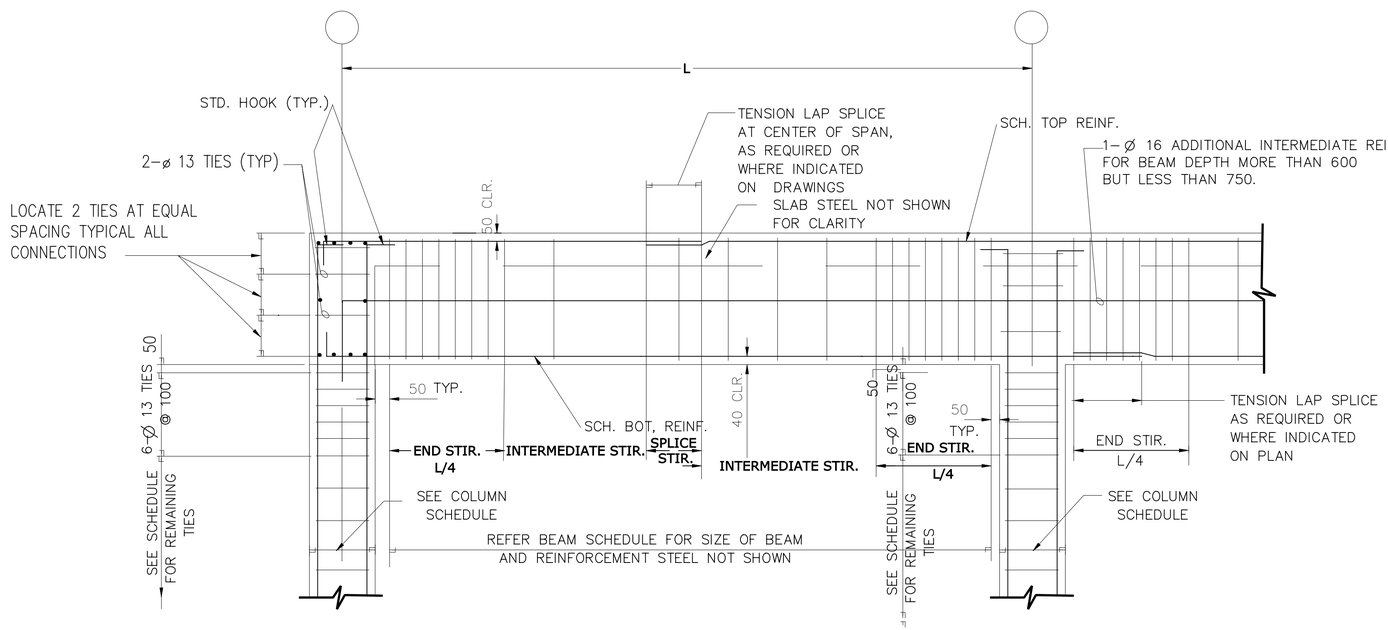

TYPICAL BEAM TO COLUMN END CONNECTION

DETAIL B S-3 S-3
SCALE=N.T.S.

TYPICAL BEAM TO COLUMN INTERIOR CONNECTION

DETAIL C S-3 S-3
SCALE=N.T.S.

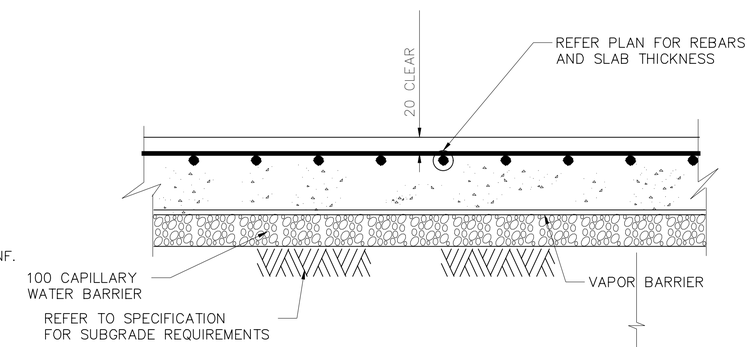

SLAB-ON-GRADE WITH REINFORCEMENTS

DETAIL D S-3 S-3
SCALE=N.T.S.

UNLESS OTHERWISE NOTED, LINEAR DIMENSIONS SHOWN ARE IN MILLIMETERS.

SYMBOL	REVISIONS	DESCRIPTION	DATE	APP
			19/03/2007	

DESIGNED BY: RG
DATE: 19 January 2009
DWN BY: TCP
SUBMITTED BY: PHILIP L. DINELLO, Center PDT Facilities Dev.
CHK BY: KGO
FILE NO.: AF0701 F-S8030T

US Army Corps of Engineers
Transatlantic Programs Center

AFGHAN NATIONAL POLICE
UP DISTRICT HEADQUARTERS
(2 STORY)
AFGHANISTAN
GUARD SHACK
SLAB-ON-GRADE DETAILS

SHEET REFERENCE NUMBER:
F
S-3

$DATE$
$FILE$

BEAM SCHEDULE

MARK	CONCRETE DIMENSIONS		FLEXURAL REINFORCEMENT		STIRRUP REINFORCEMENT				REMARKS
					SIZE	TYPE	SPACING		
	WIDTH	DEPTH	TOP	BOTTOM			ENDS & SPLICE	INTERMEDIATE	
RB1	300	600	3–Ø16	3–Ø16	Ø10		200	300	

NOTE: REFER TO DETAILS B&C/S–3 FOR TYPICAL BEAM ELEVATIONS AND SECTION 1/S–4 FOR TYPICAL BEAM SECTION.

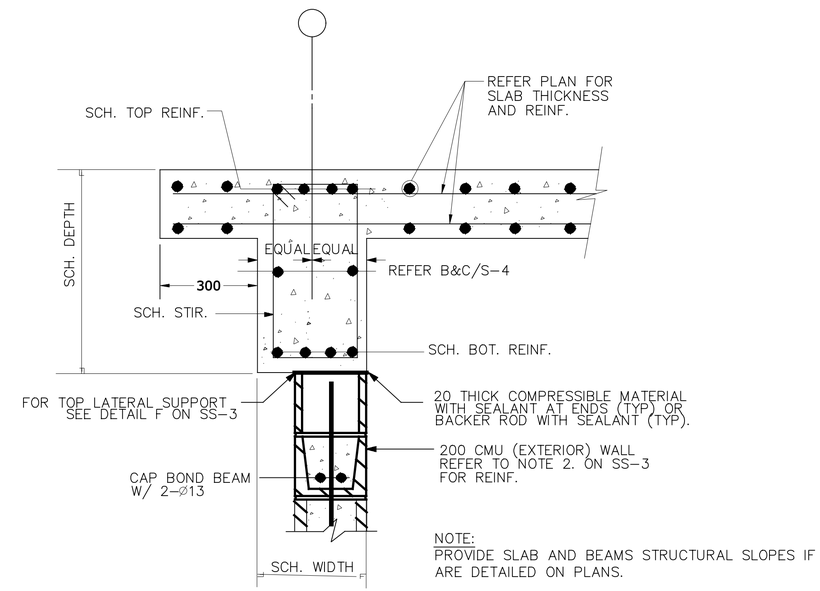

NOTE:
PROVIDE SLAB AND BEAMS STRUCTURAL SLOPES IF ARE DETAILED ON PLANS.

SECTION 1 S–1 S–4
SCALE=N.T.S.

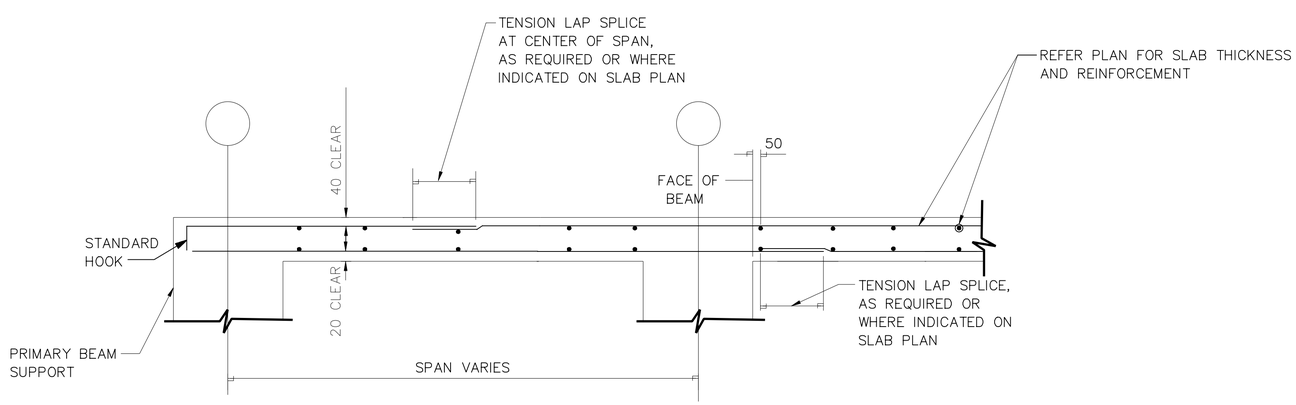

STRUCTURAL SLAB WITH TOP & BOTTOM REINFORCEMENTS

TYPICAL SECTIONS FOR STRUCTURAL SLABS A S–4 S–4
SCALE=N.T.S.

NOTE:

1. PROVIDE SIMILAR REINFORCEMENT PATTERNS FOR REINFORCEMENT RUNNING PERPENDICULAR TO SECTIONS.
2. PROVIDE SLAB AND BEAMS STRUCTURAL SLOPES IF ARE DETAILED ON PLANS.

UNLESS OTHERWISE NOTED, LINEAR DIMENSIONS SHOWN ARE IN MILLIMETERS.

REVISIONS

SYMBOL	DESCRIPTION	DATE	APP
		19/03/2007	

DESIGNED BY: RG
DATE: 19 January 2009
DWN BY: TOP
SUBMITTED BY: PHILIP L. DINELLO Center POT FACILITIES DEV
CHK BY: KGO
FILE NO.: AF0701 F–SF040T

US Army Corps of Engineers
Transatlantic Programs Center

AFGHAN NATIONAL POLICE
UP DISTRICT HEADQUARTERS
(2 STORY)
AFGHANISTAN
GUARD SHACK
ROOF BEAM AND
STRUCTURAL SLAB DETAILS

SHEET REFERENCE NUMBER:
F
S–4

$DATE$
$FILE$

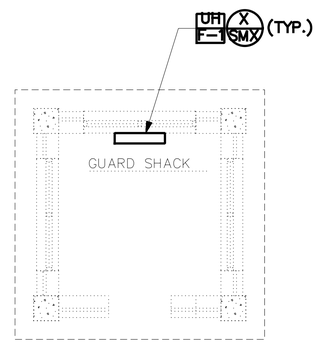

HVAC PLAN
SCALE= 1: 50

1 0 1 2 3 4
1:50

UNLESS OTHERWISE NOTED, LINEAR DIMENSIONS SHOWN ARE IN MILLIMETERS.

SYMBOL	DESCRIPTION	DATE	APP

DESIGNED BY: RMS
DWN BY: RMS
CHK BY: SE
DATE: 19 January 2009
SUBMITTED BY:
FILE NO.: AF0701 F-MH01PN

US Army Corps of Engineers
Transatlantic Programs Center

AFGHAN NATIONAL POLICE
UP DISTRICT HEADQUARTERS
(2 STORY)
AFGHANISTAN
GUARD SHACK

HVAC PLAN

SHEET REFERENCE NUMBER:
F
M-1

$DATE$
$FILE$

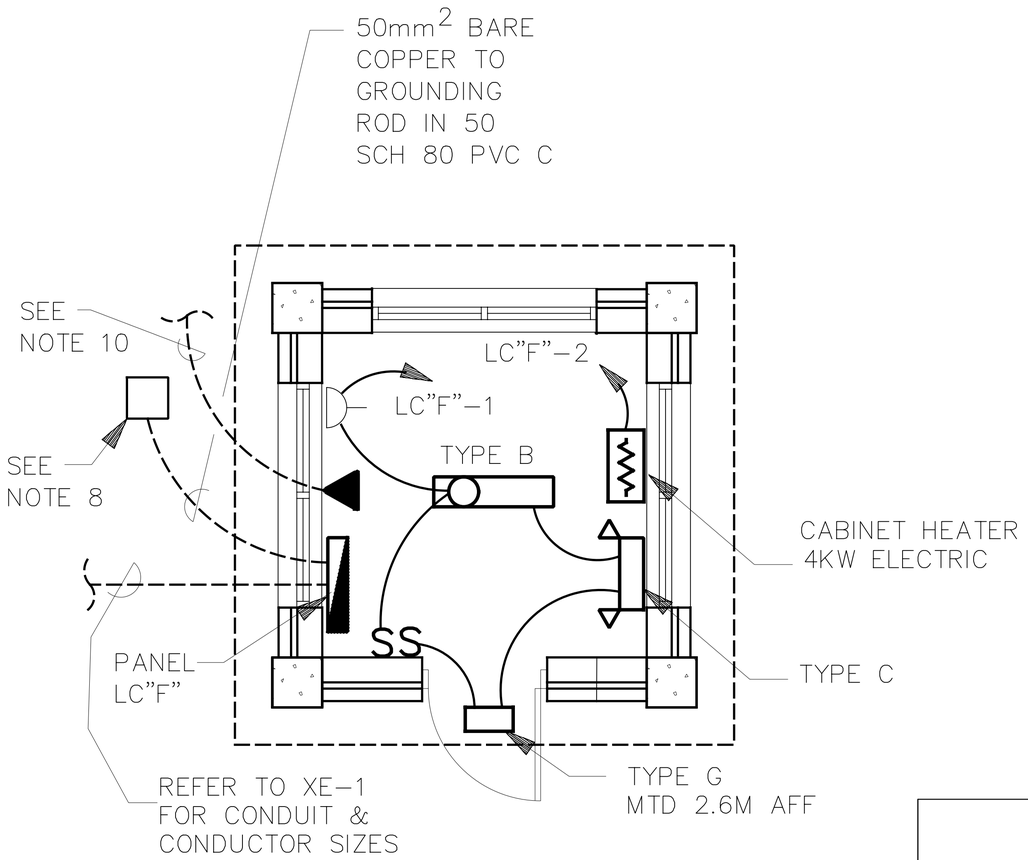

LIGHTING & POWER

SCALE: 1:25

NOTES:

1. FOR LEGEND AND ABBREVIATIONS SEE DRAWING SE-1.
2. EMERGENCY LIGHT SHALL BE CONNECTED AHEAD OF LIGHT SWITCH.
3. FOR LIGHT FIXTURE SCHEDULE SEE DRAWING SE-1.
4. COORDINATE LOCATION OF ALL ELECTRICAL FIXTURES AND MECHANICAL EQUIPMENT WITH ALL OTHER TRADES.
5. ALL WIRING SHALL BE CONCEALED OR SURFACE MOUNTED IN METAL CONDUIT.
6. PLAN IS TYPICAL FOR GUARD SHACK #1 AND #2. GUARD SHACK #1 SECONDARY SERVICE IS SUPPLIED FROM PANEL LOAD CENTER "D" (LC "D") LOCATED IN THE GUARD HOUSE (GH). GUARD SHACK #2 SECONDARY SERVICE IS SUPPLIED FROM PPSB.
7. SEE DRAWING XE-1 FOR LOCATION OF GUARD SHACKS.
8. FOR GROUNDING ROD ACCESS BOX SEE SHEET SE-3.
9. FOR SECONDARY DISTRIBUTION SEE DRAWINGS XE-1 AND XE-2.
10. PROVIDE 25MM EMPTY PVC CONDUIT WITH PULL WIRE TO A COMMUNICATION HAND HOLE LOCATED 1 METER OUTSIDE OF THE BUILDING. COORDINATE THE EXACT LOCATION OF THE HAND HOLE WITH THE CONTRACTING OFFICER. HAND HOLE SHALL BE PROVIDED WITH COVER.

PANELBOARD LC "D" SURFACE MOUNTED MINIMUM 14,000 ASYM. A.I.C. MIN.

_____ AMP. MAIN LUGS (OR) 60 AMP. MAIN BREAKER W/ 60 AMP. TRIP

CIRCUIT BREAKER TYPE 380/220 VOLTS 3 PHASE 4 WIRE 100 AMP. BUS

CKT. NO.	TRIP AMPS	NO. POLES	WIRE MM2	GND MM2	CONDUIT MM	LOAD SERVED	LOAD-V.A. AØ	LOAD-V.A. BØ	LOAD-V.A. CØ	LOAD-V.A. AØ	LOAD-V.A. BØ	LOAD-V.A. CØ	LOAD SERVED	CONDUIT MM	GND MM2	WIRE MM2	NO. POLES	TRIP AMPS	CKT. NO.
1	40	1	16	6	38	PANEL LC"F1" (GUARD SHACK #1)	5400			500			SPARE				1	20	2
3	40	1	16	6	38	PANEL LC"E2" (GUARD TOWER #2)		6280					SPACE						4
5	20	1	4	4	20	ELECT UNIT HEATER			4000			400	LIGHTING & RECEPT CIRCUITS	20	4	4	1	20	6
7						SPACE							SPACE						8
9						SPACE							SPACE						10
11						SPACE						500	SPARE				1	20	12
13						SPACE							SPACE						14
15						SPACE							SPACE						16
							5400	6280	4000	500	0	900							

TOTAL CONN. LOAD 17.1 KVA 80 % DEMAND = ESTIMATED DEMAND LOAD: 13.6 KVA

TOTAL CONN. LOAD PER PHASE (KVA): AØ 5.9 BØ 6.3 CØ 4.9

SUPPLIED FROM POWER PLANT SWITCHBOARD(PPSB)

1 .50 0 1 1.5
1:25

UNLESS OTHERWISE NOTED, LINEAR DIMENSIONS SHOWN ARE IN MILLIMETERS.

REVISIONS			
SYMBOL	DESCRIPTION	DATE	APP
		19/03/2007	

DESIGNED BY: MM
DATE: 19 January 2009
DWN BY: MM
SUBMITTED BY:
CHK BY: SE
FILE NO.: AF0701 F-EL01PN

US Army Corps of Engineers
Transatlantic Programs Center

AFGHAN NATIONAL POLICE
UP DISTRICT HEADQUARTERS
(2 STORY)
AFGHANISTAN
GUARD SHACK

LIGHTING & POWER PLAN

SHEET REFERENCE NUMBER:
F
E-1

$DATE$
$FILE$

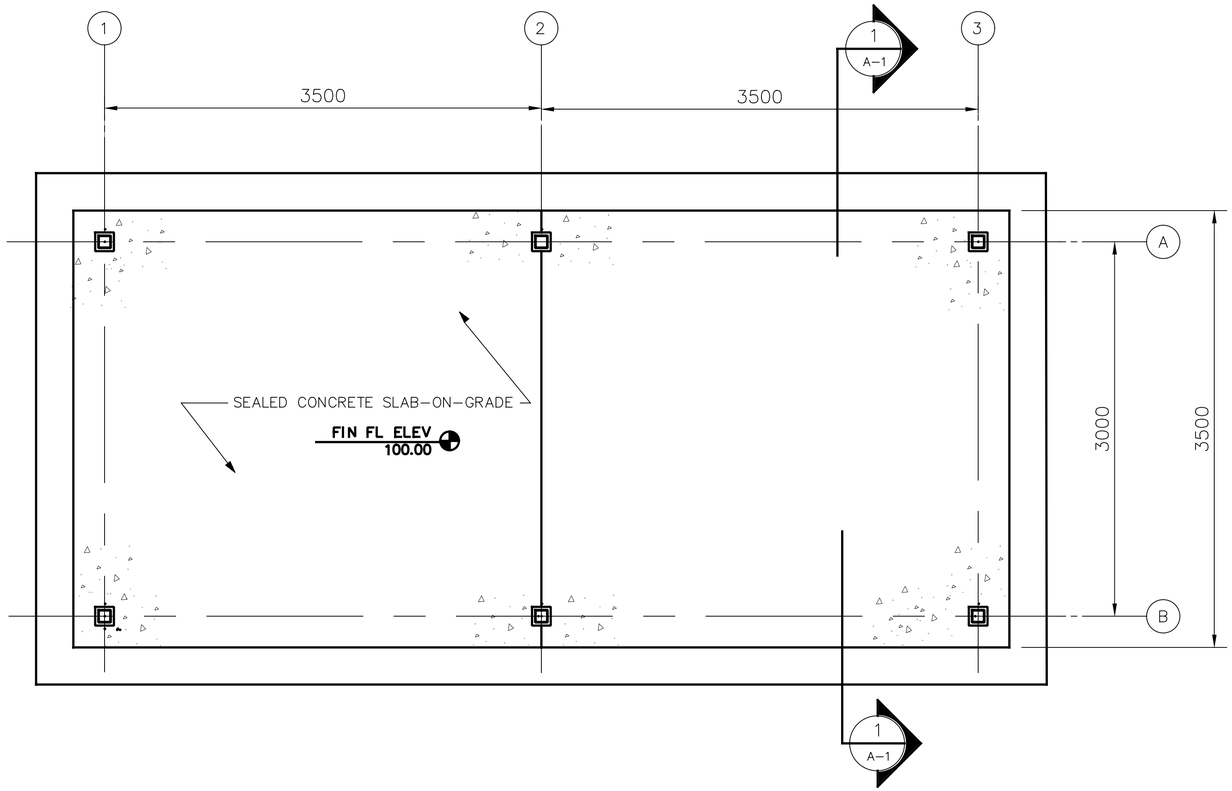

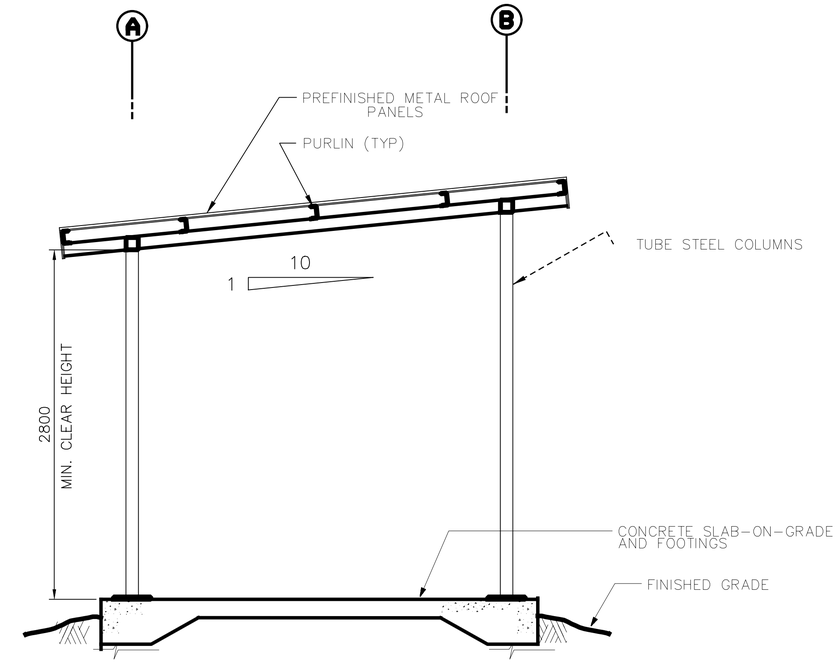

SECTION 1 / A-1 A-1
SCALE 1:25

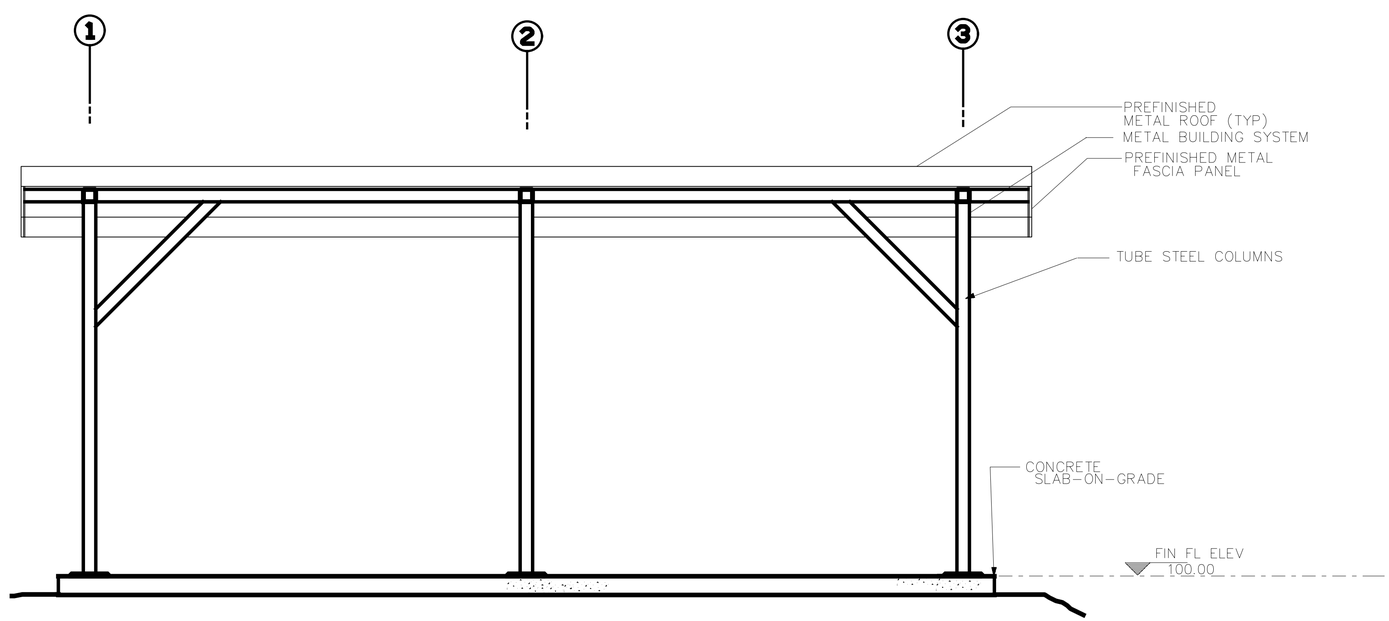

ELEVATION A / A-1 A-1
SCALE 1:25

GENERAL NOTES:

1. SEE CIVIL DRAWINGS FOR BUILDING LOCATION AND ACTUAL FINISH FLOOR ELEVATION.

ELEVATION B / A-1 A-1
SCALE 1:25

GENERATOR SUNSHADE

1 .50 0 1 1.5
1:25

(SEE CIVIL DRAWINGS FOR EXACT LOCATION OF NORTH ARROW)

UNLESS OTHERWISE NOTED, LINEAR DIMENSIONS SHOWN ARE IN MILLIMETERS.

SYMBOL	DESCRIPTION	DATE	APP
REVISIONS		19/03/2007	

DESIGNED BY: S. Hanna
DATE: 19 January 2009
DWN BY: S. Hanna
SUBMITTED BY: PHILIP L. DINELLO, Center POT FACILITIES DEV.
CHK BY: CHECK_BY
FILE NO.: AF0701 G-AR01PN

US Army Corps of Engineers
Transatlantic Programs Center

AFGHAN NATIONAL POLICE
UP DISTRICT HEADQUARTERS
(2 STORY)
AFGHANISTAN
SUNSHADE

FLOOR PLAN AND BUILDING ELEVATIONS

SHEET REFERENCE NUMBER:
G
A-1

$DATE$
$FILE$

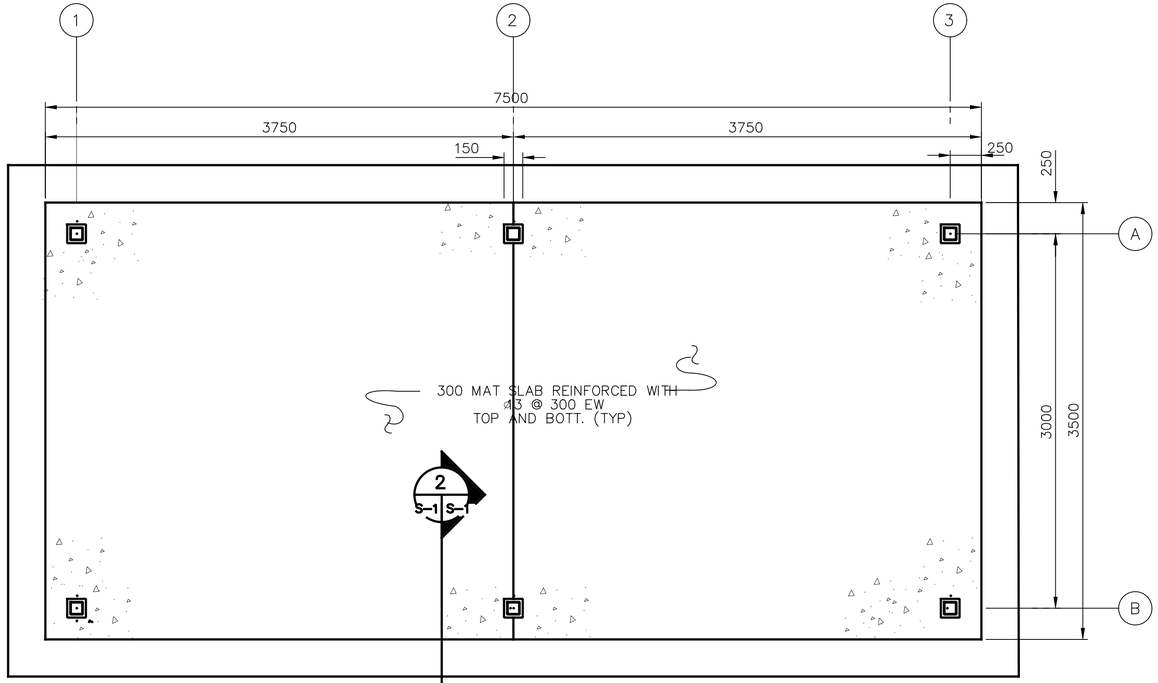

SLAB PLAN

SCALE FLR PLN_13103

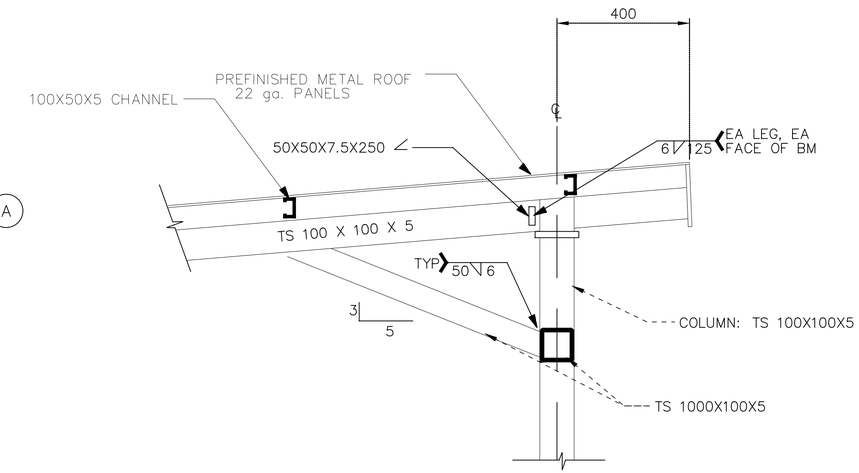

CANOPY

NOT TO SCALE

SECTION 1 S-1 S-1

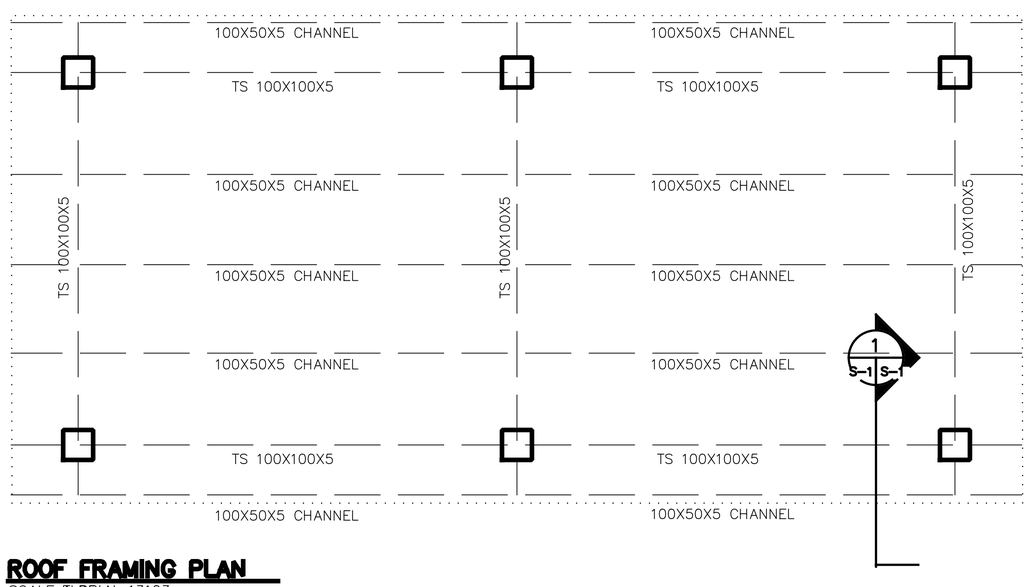

ROOF FRAMING PLAN

SCALE FLR PLN_13103

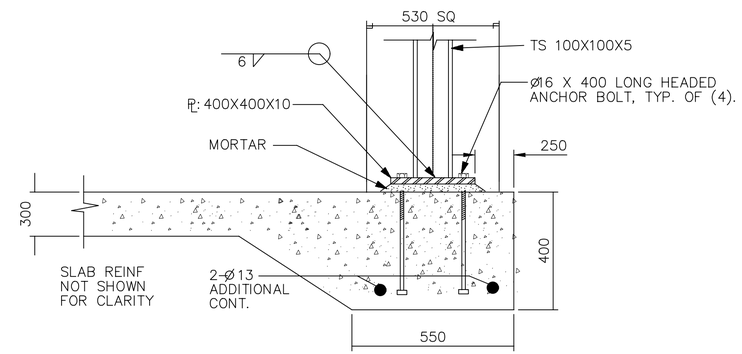

CANOPY COLUMN BASE

NOT TO SCALE

SECTION 2 S-1 S-1

UNLESS OTHERWISE NOTED, LINEAR DIMENSIONS SHOWN ARE IN MILLIMETERS.

SYMBOL	REVISIONS	DATE	APP
		19/03/2007	

DESIGNED BY: TCP
DWN BY: TCP
CHK BY: KGO
DATE: 19 January 2009
SUBMITTED BY: PHILIP L. DINELLO, Chief, PCX Facilities Dev.
FILE NO.: AF0701 G-S801PN

US Army Corps of Engineers
Transatlantic Programs Center

AFGHAN NATIONAL POLICE
UP DISTRICT HEADQUARTERS
(2 STORY)
AFGHANISTAN
SUNSHADE

STRUCTURAL PLAN AND DETAILS

SHEET REFERENCE NUMBER:
G
S-1

$DATE$
$FILE$

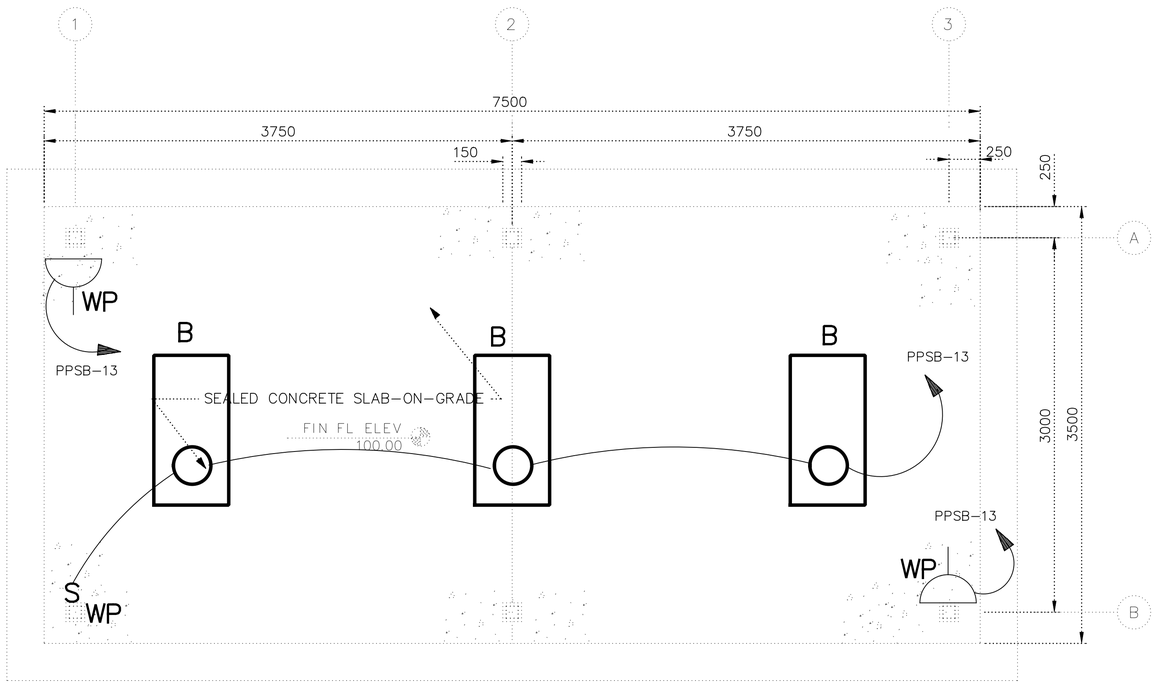

LIGHTING AND POWER PLAN
SCALE= 1: 25

NOTES:

1. FOR LEGEND AND ABBREVIATIONS SEE DRAWING SE-1.

2. FOR LIGHT FIXTURE SCHEDULE SEE DRAWING SE-1.

3. FOR ONE LINE DIAGRAM SEE DRAWING XE- I, POWER PLANT.

4. ALL WIRING SHALL BE SURFACE MOUNTED IN METAL CONDUIT.

5. LIGHT SWITCH AND RECEPTACLES SHALL BE MOUNTED ON THE COLUMN OF THE SUNSHADE 1.2 M ABOVE FINISHED FLOOR.

6. LIGHT SWITCH AND RECEPTACLES FOR THE SUNSHADE SHALL BE WEATHERPROOF TYPE.

1 .50 0 1 1.5
1:25

UNLESS OTHERWISE NOTED, LINEAR DIMENSIONS SHOWN ARE IN MILLIMETERS.

REVISIONS				
SYMBOL	DESCRIPTION	DATE	APP	
		19/03/2007		

DESIGNED BY: MM
DATE: 19 January 2009
DWN BY: MM
SUBMITTED BY:
CHK BY: SE
FILE NO.: AF0701 G-EL01PN

US Army Corps of Engineers
Transatlantic Programs Center

AFGHAN NATIONAL POLICE
UP DISTRICT HEADQUARTERS
(2 STORY)
AFGHANISTAN
SUNSHADE

LIGHTING AND POWER PLAN

SHEET REFERENCE NUMBER:
G
E-1

$DATE$
$FILE$

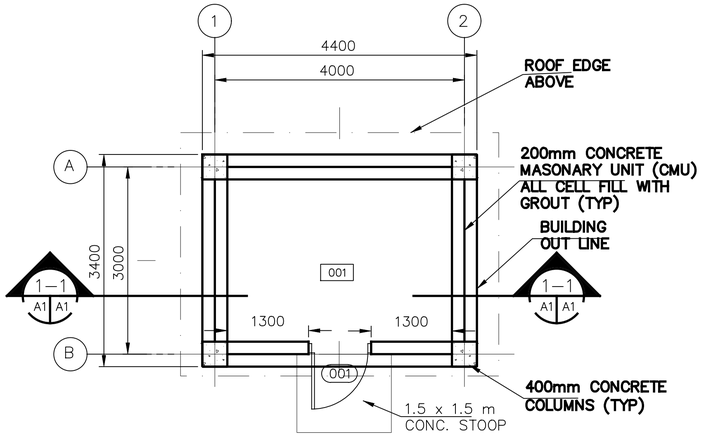

FLOOR PLAN
SCALE=1 : 50

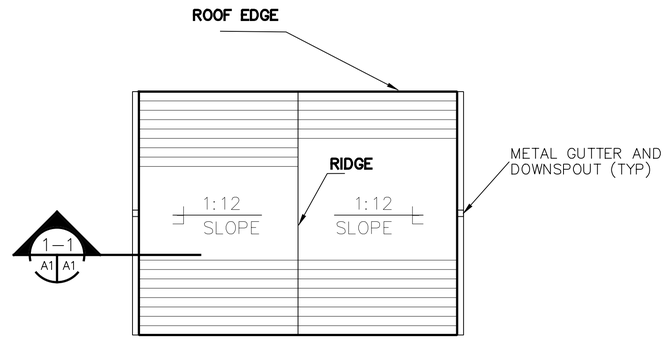

ROOF PLAN
SCALE= 1:50

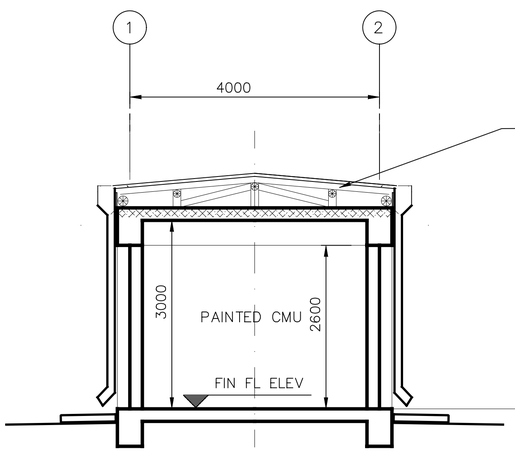

BUILDING SECTION
SCALE=1 = 100

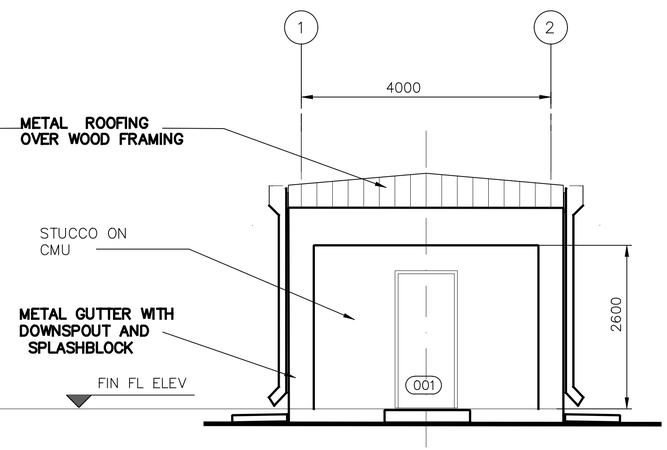

ELEVATION
SCALE=1: 50

ROOM FINISH SCHEDULE

ROOM NO.	ROOM NAME	FLOOR		BASE		WALLS		CEILING			REMARKS
		MAT'L.	COLOR	MAT'L.	COLOR	MAT'L.	COLOR	MAT'L.	COLOR	HEIGHT	
001	WELL HOUSE ROOM	F1	1	--	--	W1	20	C1	30	3400	

DOOR SCHEDULE

DOOR							FRAME				FIRE LABEL	HDW SET	REMARKS
NO.	LOCATION	TYPE	MAT'L	WIDTH	HEIGHT	THICK	HEAD	JAMB	SILL	MAT'L			
001	WELL HOUSE ROOM	F	WOOD	900	2150	45	H–1/SA2	J–1/SA2	S–1/SA2	HM	--	6	HINGES SHALL BE STAINLESS STEEL, PROVIDE THRESHOLD AND WEATHERSTRIPPING

ROOM FINISH SCHEDULE LEGEND

FLOOR TYPE

F1 SEALED CONCRETE

FLOOR COLOR

1 SEALED CONCRETE – NATURAL FINISH

WALL TYPE

W1 PAINTED CMU

WALL COLOR

20 PAINTED CMU –HEMPEL, 1005–Y50R–25400,

CEILING TYPE

C1 PAINTED EXPOSED STRUCTURE

CEILING COLOR

30 PAINTED EXPOSED STRUCTURE – HEMPEL, 0502–Y–15420, OFF WHITE

ROOM FINISH SCHEDULE NOTES:

1. ALL WALL PENETRATIONS SHALL BE SEALED TO PROVIDE A NEAT APPEARANCE. PENETRATIONS OF EXTERIOR WALLS SHALL BE SEALED TO BE WATER–TIGHT.
2. SEALANTS SHALL MATCH THE COLOR OF ADJACENT SURFACES.

1 0 1 2 3 4
1:50

SYMBOL | DESCRIPTION | DATE | APP

DESIGNED BY: S. Hanna | DATE: 19 January 2009
DWN BY: S. Hanna | SUBMITTED BY: PHILIP L. DINELLO, CHIEF, PCX FACILITIES DEV.
CHK BY: | FILE NO.: AF0701 H–AR01PN

US Army Corps of Engineers
Transatlantic Programs Center

AFGHAN NATIONAL POLICE
UP DISTRICT HEADQUARTERS
(2 STORY)
AFGHANISTAN
WELL HOUSE BUILDING
FLOOR PLAN/ELEVATION/SCHEDULE

SHEET REFERENCE NUMBER:
H
A–1

$DATE$
$FILE$

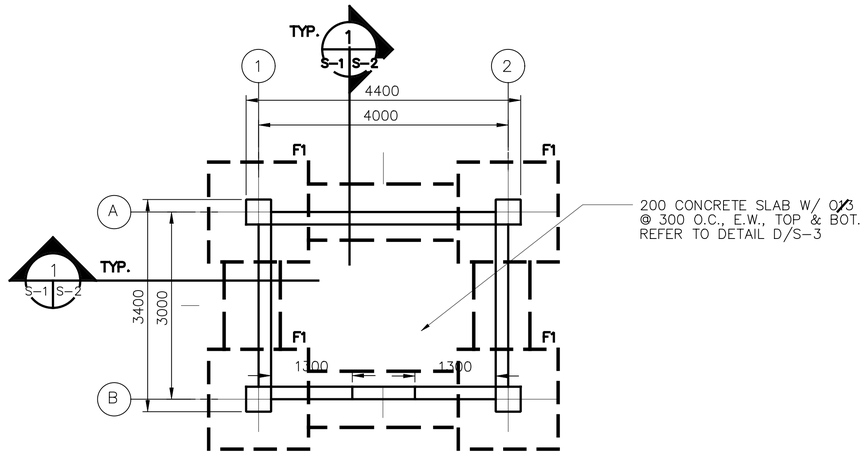

FOUNDATION AND SLAB PLAN

SCALE=1:50

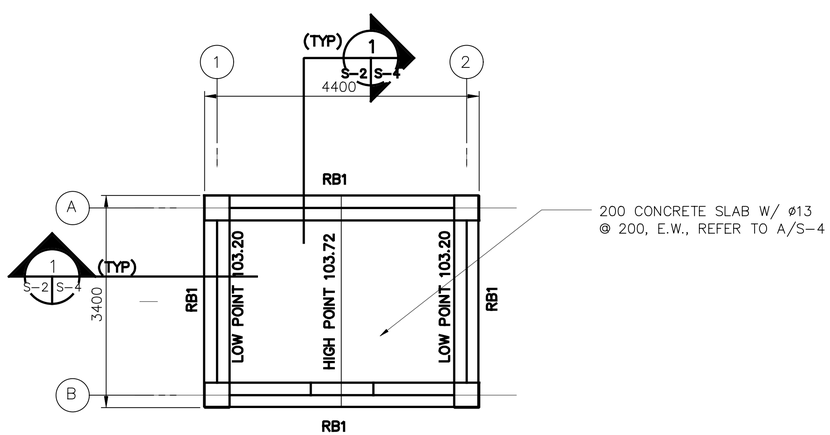

ROOF FRAMING PLAN

SCALE=1:50

1. DESIGN LOADS (SERVICE)

   LIVE LOADS:

   ROOF: 1.0 KPA (20 PSF)
   OTHERS: 4.8 KPA (100 PSF)
   8.9 KN (2.0 K) CONCENTRATED LOAD

   WIND LOADS PER IBC-2003

   USING A "3-SECOND" WIND VELOCITY OF 125 KPH (78 MPH), EXPOSURE C AND IMPORTANCE FACTOR I=1.0

   EARTHQUAKE LOADS PER IBC-2003:

   USING A SEISMICITY: Ss=1.65g AND S_1=0.75g

2. MATERIALS:

   CONCRETE: 28 MPa (4 KSI)
   CYLINDER STRENGTH AT 28 DAYS

   REINFORCING: ASTM A615 GRADE 60 (60 KSI)

3. WORK THESE STRUCTURAL DRAWINGS WITH THE STANDARD-DETAILS DRAWINGS.

4. A RELATIVE (DATUM) FINISH FLOOR ELEVATION EQUAL TO 100.00 M. IS USED AS REFERENCE ELEVATION FOR ALL STRUCTURAL DRAWINGS. REFER TO CIVIL DRAWINGS FOR ACTUAL FINISH ELEVATIONS.

5. FOUNDATIONS ARE DESIGNED USING AN ALLOWABLE BEARING PRESSURE OF 0.75 KG/SQ. CM (1500 PSF), AND BOTTOM OF FOOTINGS ARE PLACED AS SHOWN ON DRAWINGS. GEOTECHNICAL INVESTIGATION SHALL CONFIRM BEARING CAPACITY TO BE NO LESS THAN 0.75 KG/SQ CM. IF GEOTECHNICAL INVESTIGATION SHOWS LESS THAN 0.75 KG/SQ CM THE CONTRACTOR SHALL REDESIGN FOOTINGS BASED ON THE GEOTECHNICAL INVESTIGATION. SEE SPECIFICAITON 01015 PARAGRAPH, GEOTECHNICAL, FOUNDATION AND SURVEY.

UNLESS OTHERWISE NOTED, LINEAR DIMENSIONS SHOWN ARE IN MILLIMETERS.

REVISIONS			
SYMBOL	DESCRIPTION	DATE	APP
		19/03/2007	

DESIGNED BY: TCP
DATE: 19 January 2009
DWN BY: TCP
SUBMITTED BY: PHILIP L. DINELLO, Center PDT FACILITIES DEV
CHK BY: KGO
FILE NO.: AF0701 H-S001PN

US Army Corps of Engineers
Transatlantic Programs Center

AFGHAN NATIONAL POLICE
UP DISTRICT HEADQUARTERS
(2 STORY)
AFGHANISTAN
WELL HOUSE BUILDING
FOUNDATION PLAN AND ROOF PLAN

SHEET REFERENCE NUMBER:
H
S-1

$DATE$
$FILE$

FOOTING SCHEDULE

NOTE:
REFER TO A/S-2 FOR TYPICAL SECTION OF FOOTINGS.

MARK	CONCRETE DIMENSIONS			REINFORCEMENT		FTG. BOTTOM EL. METERS	REMARKS
	WIDTH	LENGTH	THICKNESS	TOP	BOTTOM		
F1	1600	1600	300	——	5–ø16 E.W.	98.5	

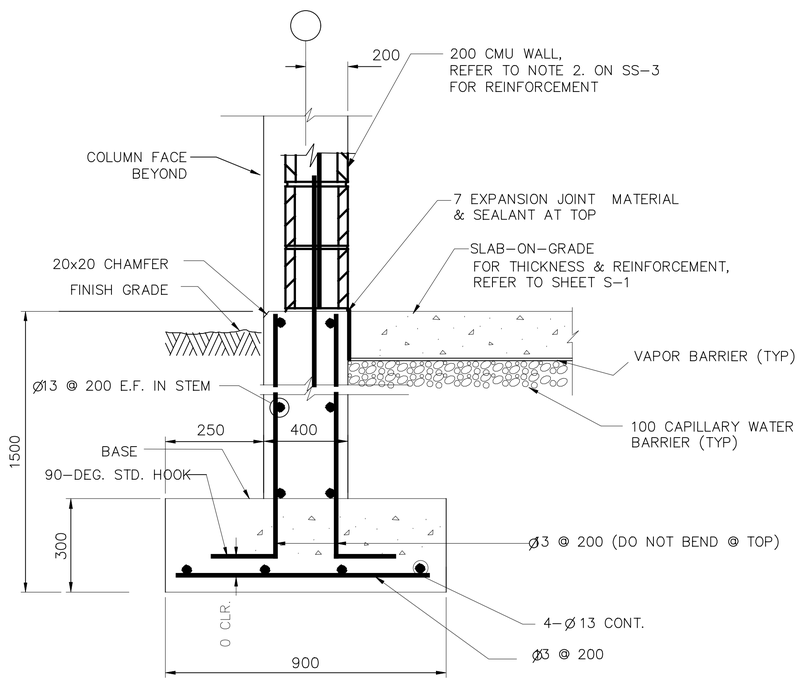

TYPICAL WALL FOOTING

SECTION 1 S-1 S-2
SCALE=N.T.S.

NOTES:
1. HORIZONTAL STEM WALL AND FOOTING REINFORCEMENTS ARE CONTINUOUS THROUGH COLUMN AND COLUMN FOOTING
2. AT DISCONTINUOUS STEM WALL BARS TERMINATE WITH STANDARD HOOK IN COLUMN. FOOTING BARS TERMINATE WITH 600 MM EMBEDMENT IN COLUMN FOOTING.
3. REFER TO CIVIL DWGS FOR ACTUAL FINISH FLOOR ELEVATIONS.

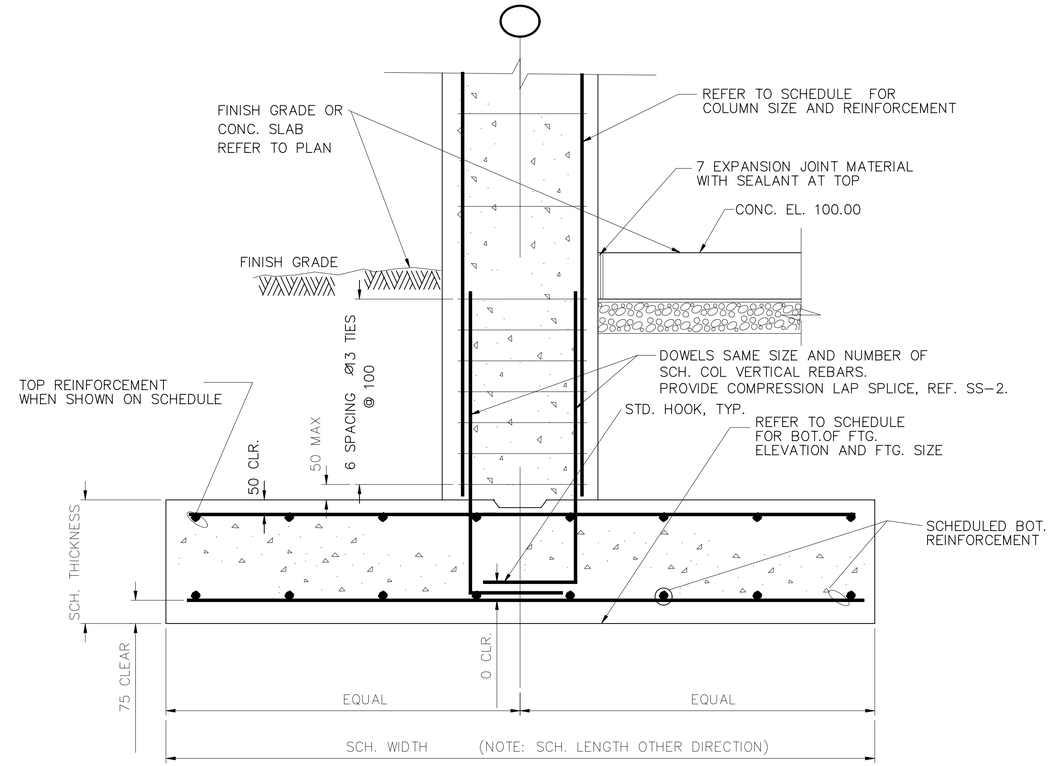

DETAIL A S-2 S-2
SCALE=N.T.S.

TYPICAL COLUMN FOOTING

UNLESS OTHERWISE NOTED, LINEAR DIMENSIONS SHOWN ARE IN MILLIMETERS.

REVISIONS				
SYMBOL	DESCRIPTION	DATE	APP	
		19/03/2007		

DESIGNED BY: RG
DATE: 19 January 2009
SUBMITTED BY: PHILIP L. DINELLO Chief, PCX Facilities Dev.
DWN BY: TCP
FILE NO.: AF0701 H-S002DT
CHK BY: KGO

US Army Corps of Engineers
Transatlantic Programs Center

AFGHAN NATIONAL POLICE
UP DISTRICT HEADQUARTERS
(2 STORY)
AFGHANISTAN
WELL HOUSE BUILDING
FOOTING DETAILS

SHEET REFERENCE NUMBER:
H
S-2

$DATE$
$FILE$

COLUMN SCHEDULE

NOTES: 1. REFER TO DETAILS B&C/S-3 AND A/S-2 FOR TYPICAL COLUMN DETAILS.

COLUMN GRIDS	COLUMN TYPE	CONCRETE DIMENSIONS		VERTICAL REINFORCEMENT	TIE REINFORCEMENT	
		WIDTH	DEPTH		SIZE	SPACING
A-1, A-2 B-1, B-2	C1	400	400	8-ø16	Ø10	300

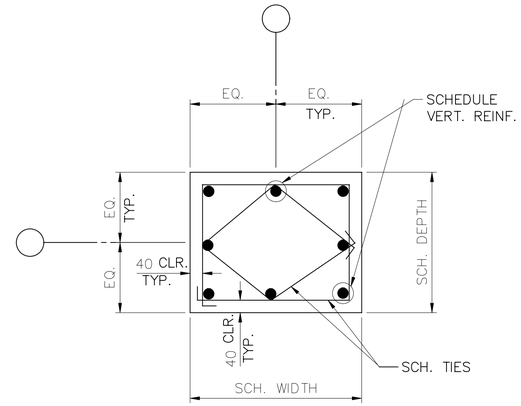

C1

COLUMN TYPE

DETAIL A
SCALE=N.T.S.
S-3 S-3

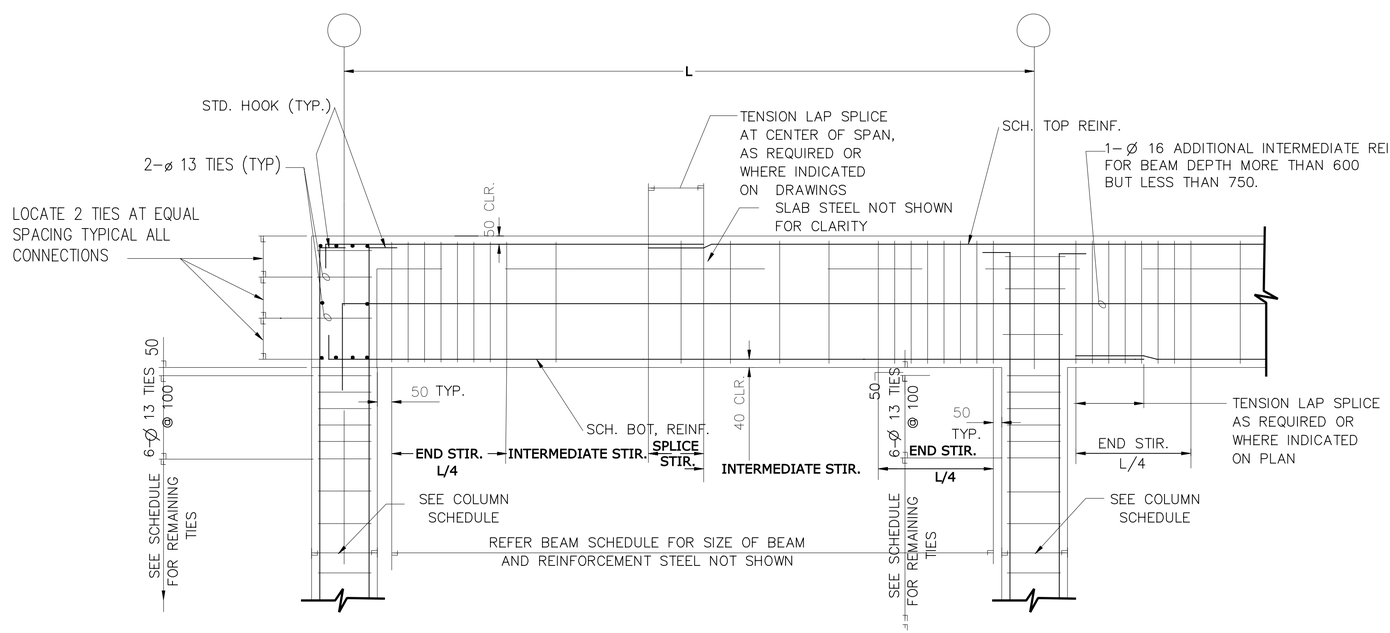

TYPICAL BEAM TO COLUMN END CONNECTION

DETAIL B
SCALE=N.T.S.
S-3 S-3

TYPICAL BEAM TO COLUMN INTERIOR CONNECTION

DETAIL C
SCALE=N.T.S.
S-3 S-3

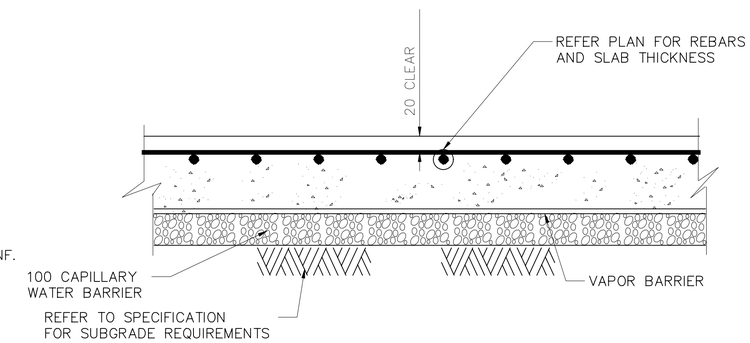

SLAB-ON-GRADE WITH TOP & BOTTOM REINFORCEMENTS

UNLESS OTHERWISE NOTED, LINEAR DIMENSIONS SHOWN ARE IN MILLIMETERS.

REVISIONS				
SYMBOL	DESCRIPTION	DATE	APP	
		19/03/2007		

DESIGNED BY: RG
DATE: 19 January 2009
DWN BY: TCP
SUBMITTED BY: PHILIP L. DINELLO, Center PCT Facilities DEV.
CHK BY: KGO
FILE NO.: AF0701 H-SF03DT

US Army Corps of Engineers
Transatlantic Programs Center

AFGHAN NATIONAL POLICE
UP DISTRICT HEADQUARTERS
(2 STORY)
AFGHANISTAN
WELL HOUSE BUILDING
SLAB-ON-GRADE DETAILS

SHEET REFERENCE NUMBER:
H
S-3

$DATE$
$FILE$

BEAM SCHEDULE

MARK	CONCRETE DIMENSIONS		FLEXURAL REINFORCEMENT		STIRRUP REINFORCEMENT				REMARKS
					SIZE	TYPE	SPACING		
	WIDTH	DEPTH	TOP	BOTTOM			ENDS & SPLICE	INTERMEDIATE	
RB1	300	600	3–ø16	3–ø16	Ø10		200	300	

NOTE: REFER TO DETAILS B&C/S–3 FOR TYPICAL BEAM ELEVATIONS AND SECTION 1/S–4 FOR TYPICAL BEAM SECTION.

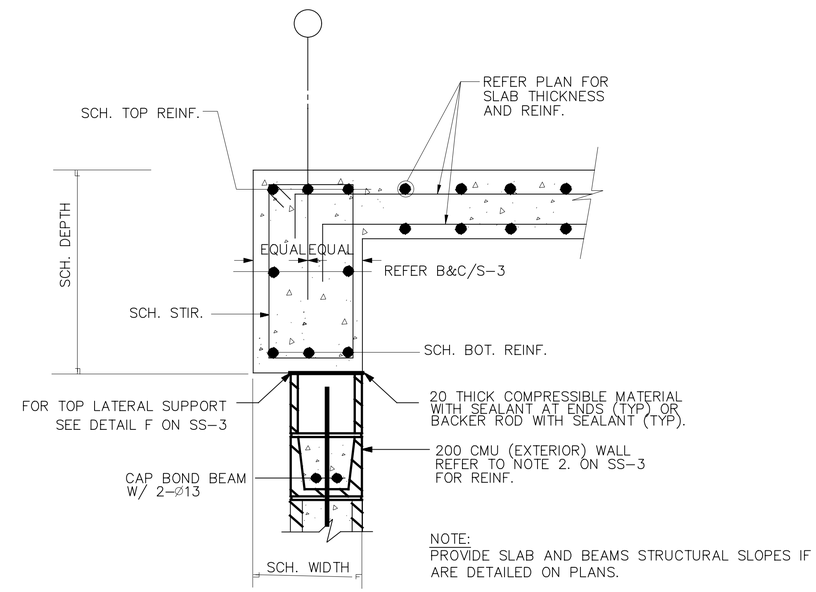

NOTE:
PROVIDE SLAB AND BEAMS STRUCTURAL SLOPES IF ARE DETAILED ON PLANS.

SECTION 1 S–1 S–4
SCALE=N.T.S.

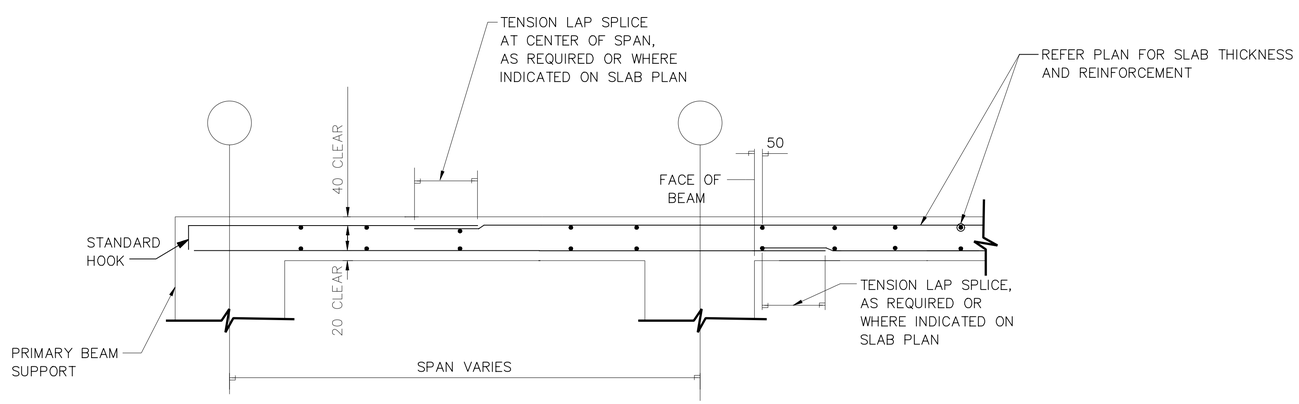

STRUCTURAL SLAB WITH TOP & BOTTOM REINFORCEMENTS

TYPICAL SECTIONS FOR STRUCTURAL SLABS A S–4 S–4
SCALE=N.T.S.

NOTE:

1. PROVIDE SIMILAR REINFORCEMENT PATTERNS FOR REINFORCEMENT RUNNING PERPENDICULAR TO SECTIONS.
2. PROVIDE SLAB AND BEAMS STRUCTURAL SLOPES IF ARE DETAILED ON PLANS.

UNLESS OTHERWISE NOTED, LINEAR DIMENSIONS SHOWN ARE IN MILLIMETERS.

SYMBOL	DESCRIPTION	DATE	APP
REVISIONS		19/03/2007	

DESIGNED BY: RG
DATE: 19 January 2009
DWN BY: TCP
SUBMITTED BY: PHILIP L. DINELLO, Center POT Facilities Dev
CHK BY: KGO
FILE NO.: AF0701 H–SF040T

US Army Corps of Engineers
Transatlantic Programs Center

AFGHAN NATIONAL POLICE
UP DISTRICT HEADQUARTERS
(2 STORY)
AFGHANISTAN
WELL HOUSE BUILDING
ROOF BEAM AND
STRUCTURAL SLAB DETAILS

SHEET REFERENCE NUMBER:
H
S–4

$DATE$
$FILE$

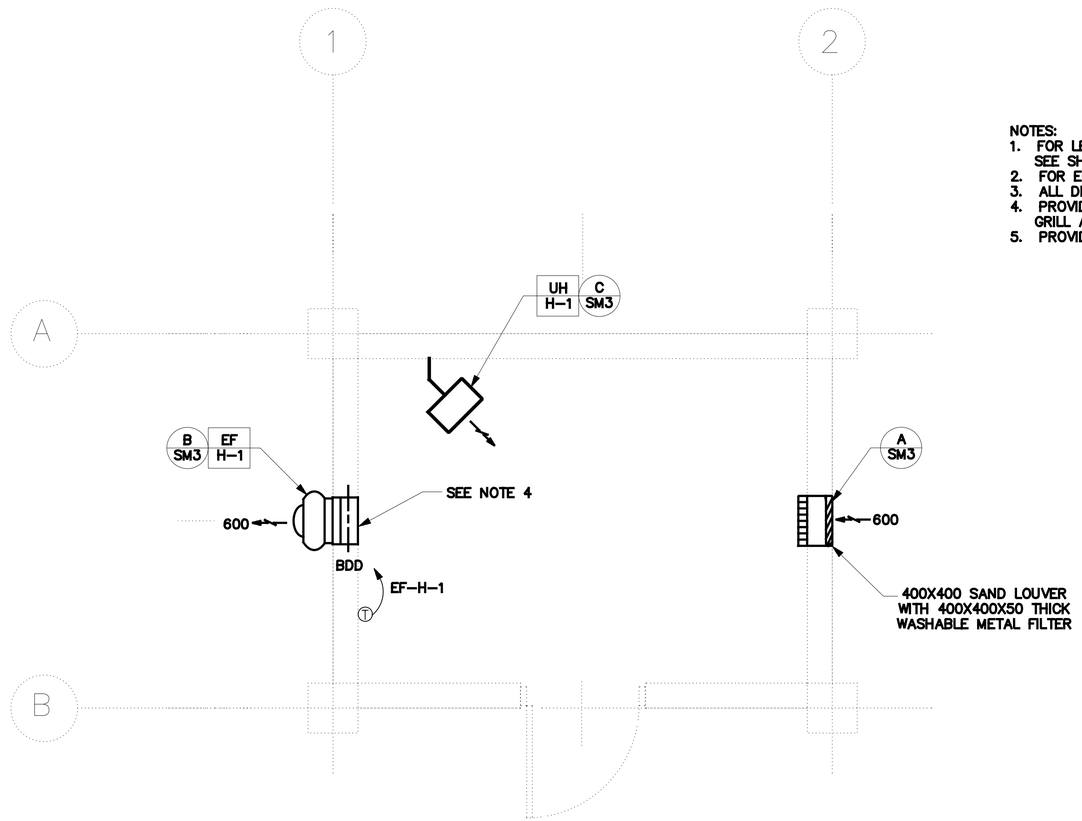

HVAC PLAN
SCALE= 1: 25

NOTES:
1. FOR LEGENDS, ABBREVIATIONS AND STANDARD MECHANICAL DETAILS SEE SHEETS SM-1 AND SM-3.
2. FOR EQUIPMENT SCHEDULES AND CONTROL DIAGRAMS SEE SHEET SM-2.
3. ALL DIMENSIONS ARE IN MM (IN) UNLESS NOTED OTHERWISE.
4. PROVIDE EACH EXHAUST FAN WITH MANUFACTURER'S STANDARD EXHAUST GRILL AND GRAVITY BACKDRAFT DAMPER.
5. PROVIDE 400x400 SAND LOUVER WITH 50MM THICK WASHABLE METAL FILTERS.

1 .50 0 1 1.5
1:25

UNLESS OTHERWISE NOTED, LINEAR DIMENSIONS SHOWN ARE IN MILLIMETERS.

SYMBOL	DESCRIPTION	DATE	APP

DESIGNED BY: RMS
DATE: 19 January 2009
DWN BY: JMC
SUBMITTED BY:
CHK BY: SE
FILE NO.: AF0701 H-MH01PN

US Army Corps of Engineers
Transatlantic Programs Center

AFGHAN NATIONAL POLICE
UP DISTRICT HEADQUARTERS
(2 STORY)
AFGHANISTAN
WELL HOUSE BUILDING

HVAC PLAN

SHEET REFERENCE NUMBER:
H
M-1

$DATE$
$FILE$

NOTES:

1. FOR LEGEND AND ABBREVIATIONS SEE DRAWING SE-1.

2.COORDINATE LOCATION OF ALL ELECTRICAL FIXTURES AND EQUIPMENT WITH ALL OTHER TRADES.

3. FOR ONE LINE DIAGRAM SEE DRAWING XE- 2, POWER PLANT.

4. ALL WIRING SHALL BE SURFACE MOUNTED IN METAL CONDUIT.

5. FOR EXACT LOCATION OF MECHANICAL EQUIPMENT SEE MECHANICAL DRAWINGS.

6. DESIGN IS BASED ON A 5 HP PUMP. IT IS CONTRACTOR'S RESPONSIBILITY TO DESIGN AND PROVIDE PROPERLY SIZED PUMP AS REQUIRED BY THE CONTRACT DOCUMENTS.

7. CONTRACTOR SHALL CONFIRM THAT ALL CIRCUIT RATINGS ARE BASED ON THE ACTUAL NAMEPLATE OF THE SUPPLIED EQUIPMENT.

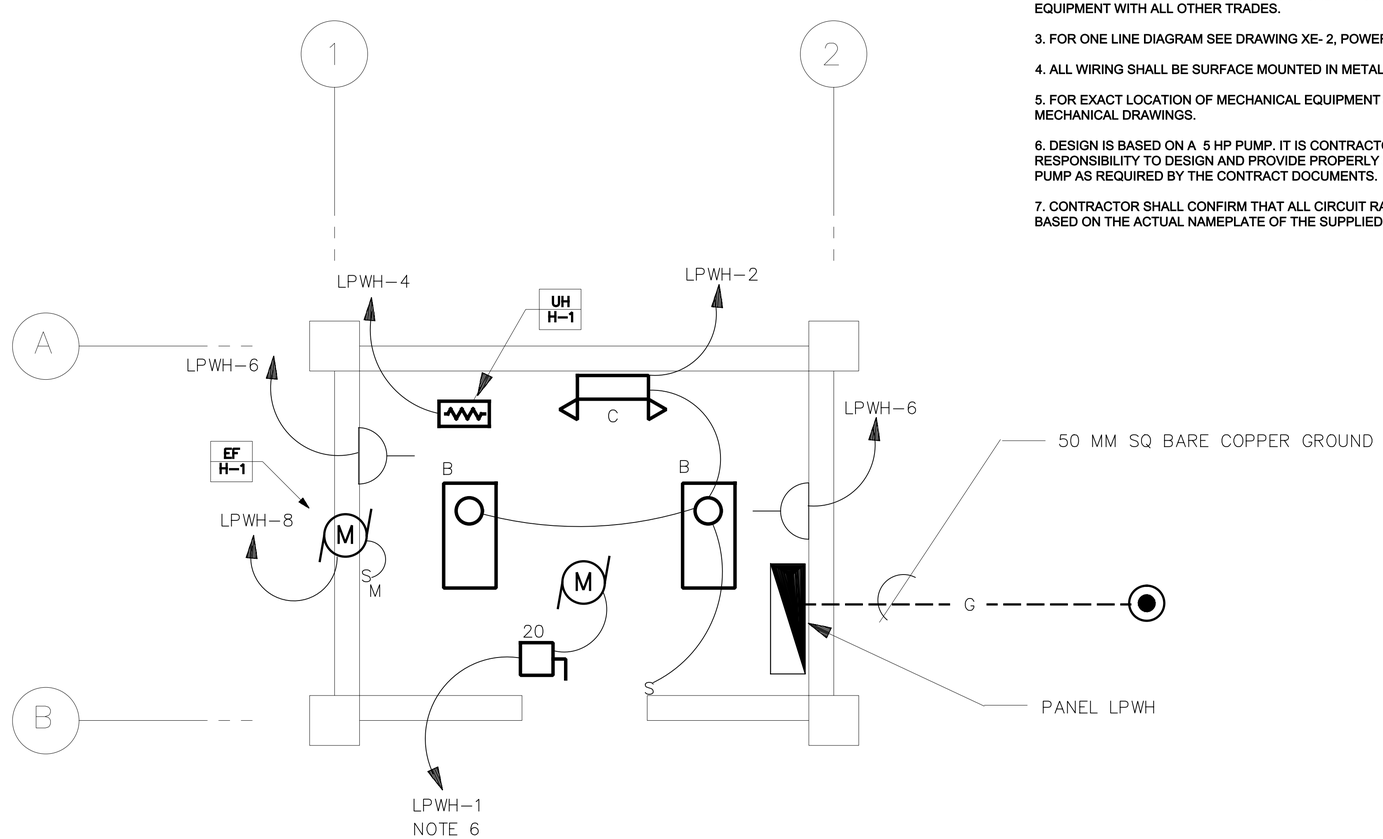

LIGHTING AND POWER PLAN

SCALE= 1:25

1 .50 0 1 1.5
1:25

UNLESS OTHERWISE NOTED, LINEAR DIMENSIONS SHOWN ARE IN MILLIMETERS.

SYMBOL	DESCRIPTION	DATE	APP

DESIGNED BY: MM
DWN BY: MM
CHK BY: SE
DATE: 19 January 2009
SUBMITTED BY:
FILE NO.: AF0701 H-EL01PN

US Army Corps of Engineers
Transatlantic Programs Center

AFGHAN NATIONAL POLICE
UP DISTRICT HEADQUARTERS
(2 STORY)
AFGHANISTAN
WELL HOUSE BUILDING
LIGHTING AND POWER PLAN

SHEET REFERENCE NUMBER:
H
E-1

$DATE$
$FILE$

PANELBOARD LPWP SURFACE MOUNTED MINIMUM 14,000 ASYM. A.I.C. MIN.

_____ AMP. MAIN LUGS (OR) 60 AMP. MAIN BREAKER W/ 40 AMP. TRIP

CIRCUIT BREAKER TYPE 380/220 VOLTS 3 PHASE 4 WIRE 100 AMP. BUS

CKT. NO.	TRIP AMPS	NO. POLES	WIRE MM2	GND MM2	CONDUIT MM	LOAD SERVED	LOAD-V.A.			LOAD-V.A.			LOAD SERVED	CONDUIT MM	GND MM2	WIRE MM2	NO. POLES	TRIP AMPS	CKT. NO.
							AØ	BØ	CØ	AØ	BØ	CØ							
1	20	3	4	4	25	WELL PUMP	2016			150			LIGHTING	25	4	4	3	20	2
3								2016			3000		ELECTRIC HEAT						4
5									2016			360	RECEPTACLES						6
7	20	1	4	4	20	EF-H-1	250						SPARE				1	20	8
9	20	1				SPARE							SPARE				1	20	10
11	20	1				SPARE							SPACE						12
13						SPACE							SPACE						14
15						SPACE							SPACE						16
							2266	2016	2016	150	3000	360							

TOTAL CONN. LOAD 9.94 KVA 100 % DEMAND = ESTIMATED DEMAND LOAD: 9.95 KVA

TOTAL CONN. LOAD
PER PHASE (KVA): AØ 2.41 BØ 5.16 CØ 2.37

SUPPLIED FROM POWER PLANT SWITCHBOARD(PPSB)

NOTES:

1. FOR LEGEND AND ABBREVIATIONS SEE DRAWING SE-1.
2. EMERGENCY LIGHT SHALL BE CONNECTED AHEAD OF LIGHT SWITCH.
3. FOR LIGHT FIXTURE SCHEDULE SEE DRAWING SE-1.
4. COORDINATE LOCATION OF ALL ELECTRICAL FIXTURES AND EQUIPMENT WITH ALL OTHER TRADES.
5. ALL WIRING SHALL BE IN CONCEALED OR SURFACE MOUNTED METAL CONDUIT.
6. REFER TO DRAWING XE-2 FOR CONDUIT AND CONDUCTOR SIZE.
7. CONTRACTOR SHALL CONFIRM THAT ALL CIRCUIT RATING IS BASED ON THE ACTUAL NAME PLATE OF THE SUPPLIED EQUIPMENT.

UNLESS OTHERWISE NOTED, LINEAR DIMENSIONS SHOWN ARE IN MILLIMETERS.

SYMBOL | DESCRIPTION | DATE | APP

DESIGNED BY: MM
DWN BY: MM
CHK BY: SE
DATE: 19 January 2009
SUBMITTED BY:
FILE NO.: AF0701 H-EP02SC

US Army Corps of Engineers
Transatlantic Programs Center

AFGHAN NATIONAL POLICE
UP DISTRICT HEADQUARTERS
(2 STORY)
AFGHANISTAN
WELL HOUSE BUILDING

PANEL SCHEDULES

SHEET REFERENCE NUMBER:
H
E-2

$DATE$
$FILE$

ARCHITECTURAL ABBREVIATIONS AND SYMBOLS

ABBREVIATIONS

A

@	AT
AC	AIR CONDITIONER
ACCFLR	RAISED FLOOR SYSTEM
ACFT	AIRCRAFT
ACST	ACOUSTICAL
AD	AREA DRAIN
A/E	ARCHITECT/ENGINEERS
AFF	ABOVE FINISH FLOOR
ALUM	ALUMINUM
ANOD	ANODIZED
AOC	AIR OPERATIONS CENTER
APPROX	APPROXIMATELY
ARCH	ARCHITECTURAL
ASPH	ASPHALT
ATC	ACOUSTICAL TILE CEILING
AWP	ACOUSTICAL WALL PANEL

B

BB	BALL BEARING
BMUM	BITUMINOUS
BL	BASE LINE
BLDG	BUILDING
BLK	BLOCK
B/M	BENCH MARK OR BEAM
BOM	BILL OF MATERIALS
BRKT	BRACKET
BOT	BOTTOM
BRD	BOARD

C

CARP	CARPET
CB	CORE BORING
C TO C	CENTER TO CENTER
CEM	CEMENT
CH	CLEAR HEART
CFM	CUBIC FEET PER MINUTE
CI	CAST IRON
CIP	CAST IN PLACE
CJ OR CJT	CONTROL JOINT
℄	CENTER LINE
CLF	CHAIN LINK FENCE
CLG	CEILING
CLR	CLEAR
CM	CENTIMETER
CMDR	COMMANDER
CMP	CORRUGATED METAL PIPE
CMU	CONCRETE MASONRY UNIT
CO	CLEANOUT
COE	CORPS OF ENGINEERS
CONCR	CONCRETE
CONN	CONNECTION
CONST	CONSTRUCTION
CONT	CONTINUOUS
CONTAM	CONTAMINATED
CONTR	CONTRACTOR
CORR	CORRUGATED
CPRSR	COMPRESSOR
CT	CERAMIC TILE
CTR	CENTER
CUL	CULVERT
CUM	CUBIC METERS
CWT	COUNTERWEIGHT
COORD	COORDINATE

D

D	DEPTH
DECON	DECONTAMINATION
DET	DETAIL
DI	DRAIN INLET
DIA	DIAMETER
DIM	DIMENSION
DISP	DISPENSER
DJ	DUMMY JOINT
DRWG	DRAWING
DS	DOWNSPOUT
DW	DRINKING WATER

E

E	EAST
EA	EACH
EG	EXISTING GRADE
EJ	EXPANSION JOINT
EL OR ELEV	ELEVATION
ELEC	ELECTRICAL
ENCL	ENCLOSURE
ENGR	ENGINEER
ENT	ENTRANCE
EPDM	ELASTOMERIC ROOFING
EPX	EPOXY COATING
EQ	EQUAL
ES/EW	EMERGENCY SHOWER/EYE WASH
EW	EACH WAY
EXCA	EXCAVATE
EXH	EXHAUST
EXIST	EXISTING
EXP	EXPANSION OR EXPOSED
EWC	ELECTRIC WATER COOLER
EWH	ELECTRIC WATER HEATER

ABBREVIATIONS

F

F	FEET
FD	FLOOR DRAIN
FDN	FOUNDATION
FF & E	FURNITURE, FURNISHINGS AND EQUIPMENT
F TO F	FACE TO FACE
FE	FIRE EXTINGUISHER
FFLEL	FINISH FLOOR ELEVATION
FG	FINISH GRADE
FH	FIRE HYDRANT
FIN	FINISH
FL	FLOOR
FPM	FEET PER MINUTE
FTG	FOOTING

G

GA	GAUGE
GALV	GALVANIZED
GPM	GALLONS PER MINUTE
GR	GRADE
GT	GATE (FENCE)
GVL	GRAVEL
GYP	GYPSUM

H

HB	HOSE BIB
HDW	HARDWARE
HDWD	HARDWOOD
HZ	HERTZ
HF	HIGH FREQUENCY
HGT	HEIGHT
HM	HOLLOW METAL
HORIZ	HORIZONTAL
HP	HIGH POINT
HH	HEX HEAD
HC	HANDICAPPED
HR	HOUR

I

ID	INSIDE DIAMETER
INSTL	INSTALL
INTEL	INTELLIGENCE
INTER	INTERIOR
INV	INVERT
INSUL	INSULATION

J

JAN	JANITOR
JB	JUNCTION BOX
JCT	JUNCTION
JT	JOINT

K

KG	KILOGRAM
KM	KILOMETER
KPA	KILO PASCAL
KPH	KILOMETERS PER HOUR

L

LAM	LAMINATE
LAT	LATITUDE
LAV	LAVATORY
LBY	LOBBY
LBS	POUNDS
LG	LONG
LINMET	LINEAR METAL CEILING SYSTEM
LNRPNL	METAL LINER PANEL
LOC	LIMITS OF CONSTRUCTION
LONG	LONGITUDE
LP	LOW POINT
LSD	LARGE SCREEN DISPLAY
LTG P	LIGHTING PANEL
LVR	LOUVER

M

M	METER
MATL	MATERIAL
MAX	MAXIMUM
MECH	MECHANICAL
MH	MANHOLE
MISC	MISCELLANEOUS
MIN	MINIMUM
ML	MATCH LINE
MM	MILLIMETERS
MO	MASONRY OPENING
MON	MONUMENT
MOIST	MOISTURE
MPH	MILES PER HOUR
MTD	MOUNTED
MTL	METAL
MSNRY	MASONRY
MFR	MANUFACTURER
MATL	MATERIAL
MW	FORCE PROTECTION DOOR

ABBREVIATIONS

N

N	NORTH
NA	NOT APPLICABLE
NIC	NOT IN CONTRACT
NICAD	NICKEL CADMIUM
NO	NUMBER
NTS	NOT TO SCALE

O

OC	ON CENTER
OD	OUTSIDE DIAMETER
OPH	OPPOSITE HAND
OPNG	OPENING
OPP	OPPOSITE
OPS	OPERATIONS

P

PANL	PANEL
PCS	PIECES
PE	POLYETHYLENE
PKG	PARKING OR PACKAGE
PL	PLATE
PLAS	PLASTER
PLBG	PLUMBING
POL	PETROLEUM OIL LUBRICANT
PP	POWER PANEL
PRCST	PRECAST
PROP	PROPERTY
PSF	POUNDS PER SQUARE FOOT
PTD	PAINTED
PTR	PIPE TRENCH
PVMT	PAVEMENT

Q

Q	DESIGN DISCHARGE
QD	QUICK DISCONNECT

R

R	RADIUS OR REINFORCED
RCP	REINFORCED CONCRETE PIPE
RD	ROOF DRAIN
RE	REFERENCE
REINF	REINFORCED
REQD	REQUIRED
REV	REVISION
RH	RIGHT HAND
RI	RISER
RM	ROOM
RO	ROUGH OPENING
ROW	RIGHT OF WAY
RP	RADIUS POINT
RR	RAILROAD
RT	RIGHT
RTU	ROOF TOP UNIT
RVS	REVERSE
RW	RAW WATER

S

S OR SO	SOUTH
SCH	SCHEDULE
SECT	SECTION
SD	SMOKE DETECTOR
SG	SUB GRADE
SH OR SHT	SHEET
SHWR	SHOWER
SIM	SIMILIAR
SL	SLOPE
SMH	SEWER MANHOLE
SOC	STRATEGIC OPERATIONS CENTER
SPEC	SPECIFICATION
SPFC	SPECIFIC
SQ	SQUARE
SS	SANITARY SEWER
SST	STAINLESS STEEL
STA	STATION
STD	STANDARD
STL	STEEL
STRUCT	STRUCTURAL
SUSPLAS	SUSPENDED PLASTER
SVC	SERVICE CONNECTION

ABBREVIATIONS

T

TC	TOP OF CURB
TELE C	TELEPHONE CABINET
TER	TERRAZZO
TG	TOP OF GRATE
TK	TANK
TO	TECHNICAL ORDER
TOS	TOP OF STEEL
TOW	TOP OF WALL
TP	TEST PIT
TR	TRENCH
TSW	TOP OF SIDEWALK
TYP	TYPICAL
TP	TOP OF PAVEMENT
TH/THK	THICK / THICKNESS

U

UBC	UNIFORM BUILDING CODE
UG	UNDERGROUND
UNO	UNLESS NOTED OTHERWISE
UPS	UNINTERRUPTIBLE POWER SUPPLY
UTIL	UTILITY

V

VB	VALVE BOX
VC	VERTICAL CURVE
VCT	VINYL COMPOSITION TILE
VEH	VEHICLE
VEL	VELOCITY
VERT	VERTICAL
VEST	VESTIBULE
VIP	VERY IMPORTANT PERSON
VTR	VENT THRU ROOF

W

W	WEST, WIDE
WC	WATER CLOSET
WM	WIRE MESH PARTITION
WSP	WELDED STEEL PIPE
WT	WEIGHT
W/O	WITHOUT
W/	WITH
WWF	WELDED WIRE FABRIC

REFERENCE SYMBOLS

A / A-1 A-2	DETAIL IDENTIFICATION NO.OF SHEET ON WHICH DETAIL IS DRAWN NO. OF SHEET ON WHICH CONDITION IS REFERENCED
1 / A-3	BUILDING SECTION IDENTIFICATION NO.OF SHEET ON WHICH SECTION IS DRAWN
A / A-3	WALL SECTION IDENTIFICATION NO.OF SHEET ON WHICH SECTION IS DRAWN
102	ROOM NUMBER
102	DOOR NUMBER
H	COLUMN LINE
A	WINDOW TYPE
A	WALL TYPE IDENTIFIER
102	EQUIPMENT IDENTIFIER
102	FURNITURE IDENTIFIER
FIN FL ELEV 100.00	FINISH FLOOR EL. SYMBOL IN PLAN
FIN FL ELEV 100.00	FINISH FLOOR EL. SYMBOL IN SECT. AND ELEV.
A B C D	INTERIOR ELEVATION KEY SYMBOL
A / A-3	EXTERIOR ELEVATION IDENTIFIER
	STUCCO CONTROL JOINT
L2	LOUVER IDENTIFIER
	STRUCTURAL CONTROL JOINT
	WALLS TO THE UNDERSIDE OF THE STRUCTURE

MATERIAL SYMBOLS

	EARTH
	CAST CONCRETE (SECTION)
	LIGHTWEIGHT CONCRETE (SECTION)
	CONCRETE MASONRY UNIT (LARGE SCALE-PLAN)
	STEEL
	ROUGH WOOD
	FINISHED WOOD
	WOOD BLOCKING
	PLYWOOD-LARGE SCALE
	GLASS (ELEVATION)
	BATT FILL INSULATION (SECTION)
	LOOSE FILL INSULATION (PLAN)
	RIGID BOARD INSULATION
	CERAMIC TILE-LARGE SCALE
	CONCRETE (PLAN & ELEVATION)
	CERAMIC TILE (PLAN & ELEVATION)
	PLASTER OR STUCCO (ELEVATION)
	SHEET MEMBRANE
	LANDSCAPING (TREE, SHRUB, ETC.)
	CHAIN LINK PARTITION

GENERAL NOTES:

1. THE LIST OF ABBREVIATIONS IS SHOWN AS A GUIDE ONLY AND DOES NOT NECESSARILY INCLUDE ALL ABBREVIATIONS USED. OTHER ABBREVIATIONS MAY BE FOUND AMONG THE DRAWINGS. SOME ABBREVIATIONS LISTED MAY NOT HAVE BEEN USED.
2. FOR REFERENCE PURPOSES, A FINISHED FLOOR ELEVATION OF 100.00 HAS BEEN ESTABLISHED FOR GRADE LEVEL FLOOR PLANS. ON ARCHITECTURAL DRAWINGS. SEE CIVIL DRAWINGS FOR ACTUAL FINISHED FLOOR AND FINISHED GRADE ELEVATIONS.
3. HOUSEKEEPING PADS FOR MECHANICAL EQUIPMENT SHALL BE PROVIDED AS REQUIRED BY MECHANICAL DRAWINGS. SIZE AND LOCATION SHALL BE COORDINATED WITH MECHANICAL EQUIPMENT PROVIDED.

UNLESS OTHERWISE NOTED, LINEAR DIMENSIONS SHOWN ARE IN MILLIMETERS.

SYMBOL	DESCRIPTION	DATE	APP

DESIGNED BY: YSK
DWN BY: JSG
CHK BY: YSK
DATE: 19 January 2009
SUBMITTED BY: PHILIP L. DINELLO Chief, PCX PACIFIC DEV.
FILE NO.: AF0701 ⇐ AR01GN

US Army Corps of Engineers
Transatlantic Programs Center

AFGHAN NATIONAL POLICE
UP DISTRICT HEADQUARTERS
(2 STORY)
AFGHANISTAN
STANDARD DETAILS

SYMBOLS AND ABBREVIATIONS

SHEET REFERENCE NUMBER:
SA-1

$DATE$
$FILE$

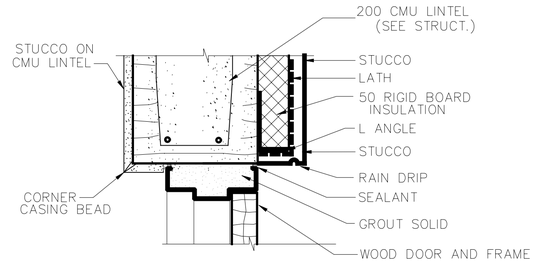

HEAD DETAIL H-1 / SA2
SCALE 1:5

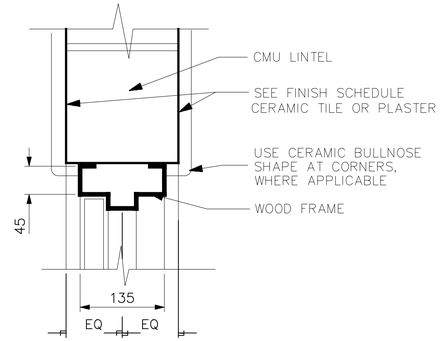

HEAD DETAIL H-2 / SA2
SCALE 1:5

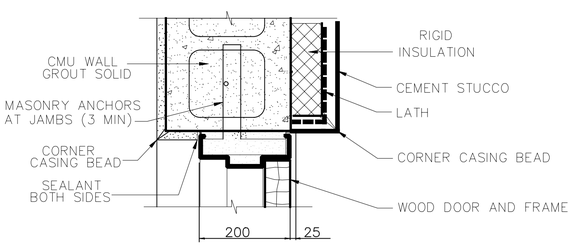

JAMB DETAIL J-1 / SA2
SCALE 1:5

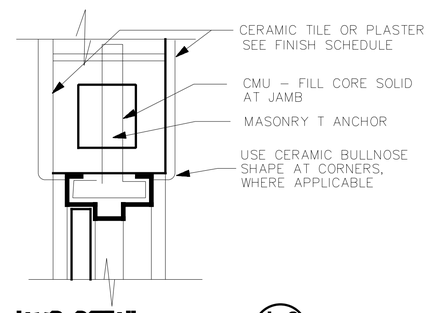

JAMB DETAIL J-2 / SA2
SCALE 1:5

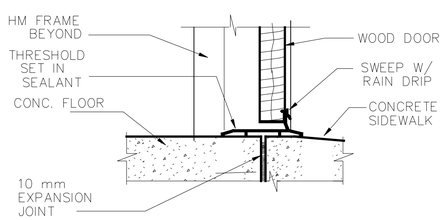

SILL DETAIL S-1 / SA2
SCALE 1:5

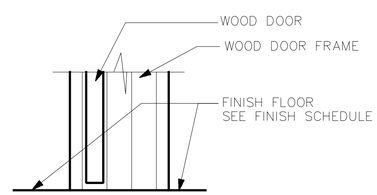

SILL DETAIL S-2 / SA2
SCALE 1:5

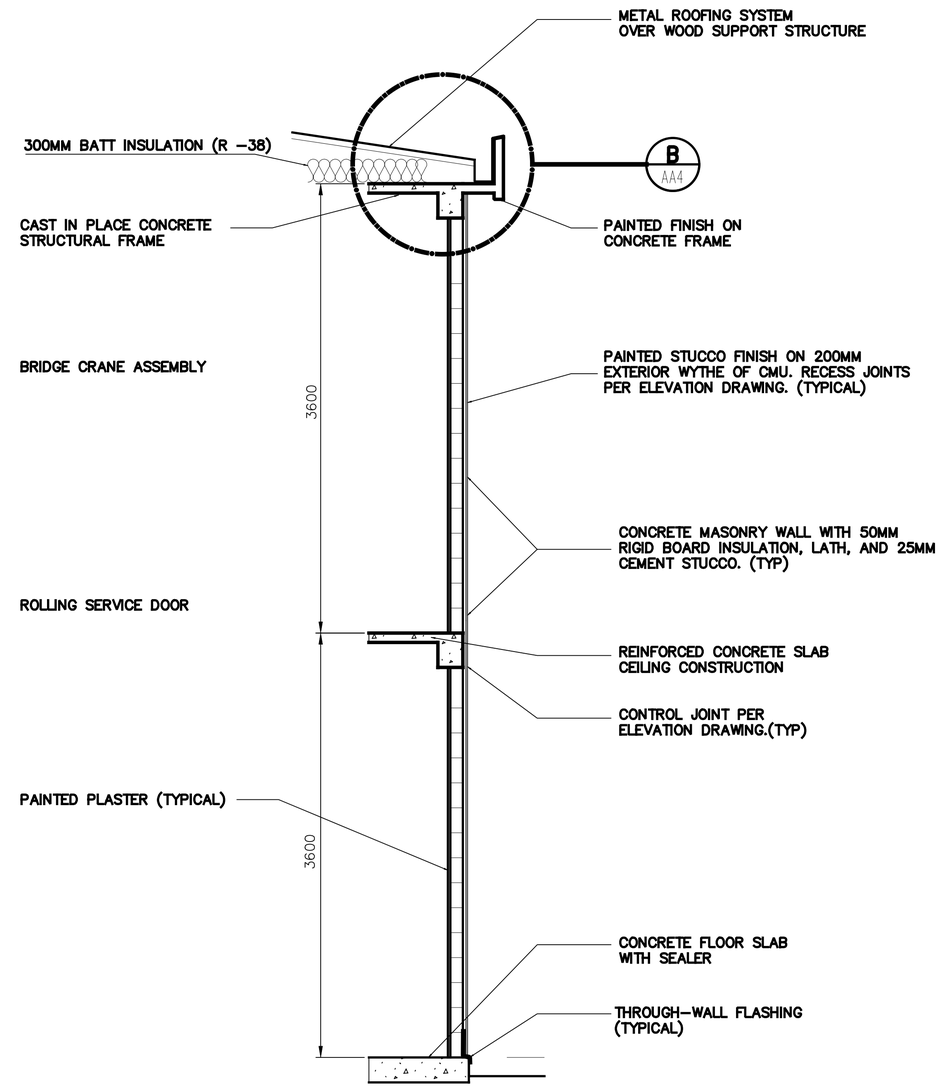

WALL SECTION
SCALE= 1 :25

0 .10 .20 .30 .40 1
1:5

UNLESS OTHERWISE NOTED, LINEAR DIMENSIONS SHOWN ARE IN MILLIMETERS.

SYMBOL	DESCRIPTION	DATE	APP
REVISIONS		19/03/2007	

DESIGNED BY: YSK
DATE: 19 January 2009
DWN BY: USG/YSK
SUBMITTED BY: PHILIP L. DINELLO, CHIEF, POT FACILITIES DEV.
CHK BY: YSK
FILE NO.: AF0701 &-AR020T

US Army Corps of Engineers
Transatlantic Programs Center

AFGHAN NATIONAL POLICE
UP DISTRICT HEADQUARTERS
(2 STORY)
AFGHANISTAN
STANDARD DETAILS
DOOR DETAILS AND WALL SECTION

SHEET REFERENCE NUMBER:
SA–2

$DATE$
$FILE$

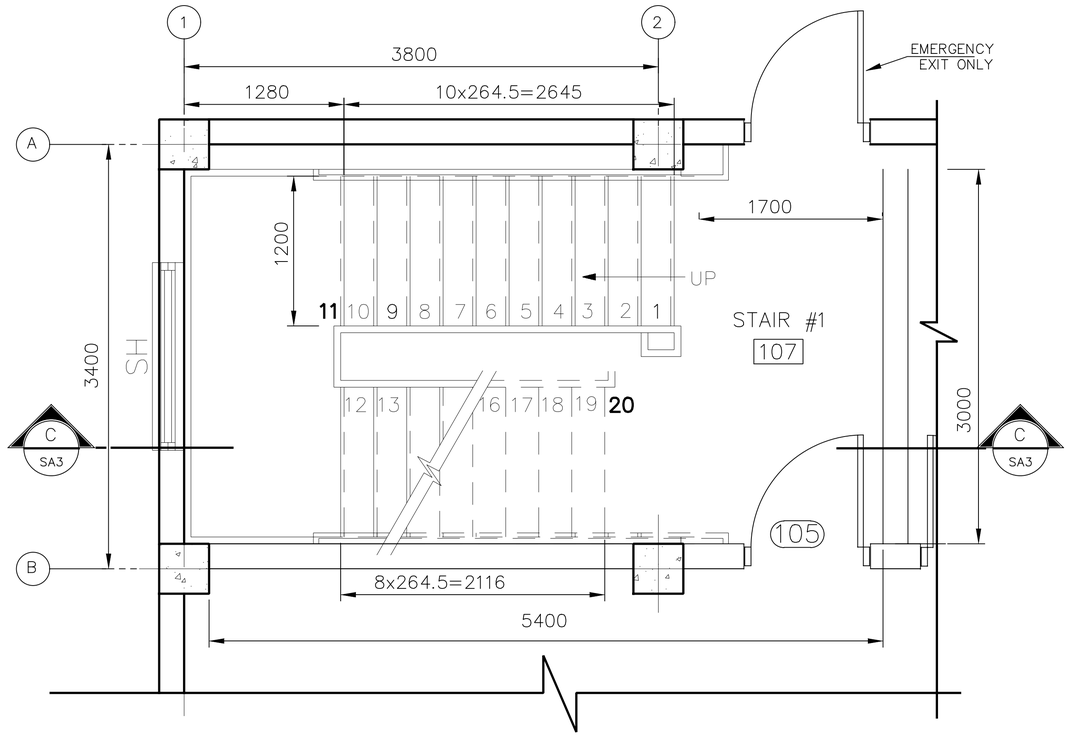

ENLARGED PLAN (A / AA1 SA3)
SCALE=1:25

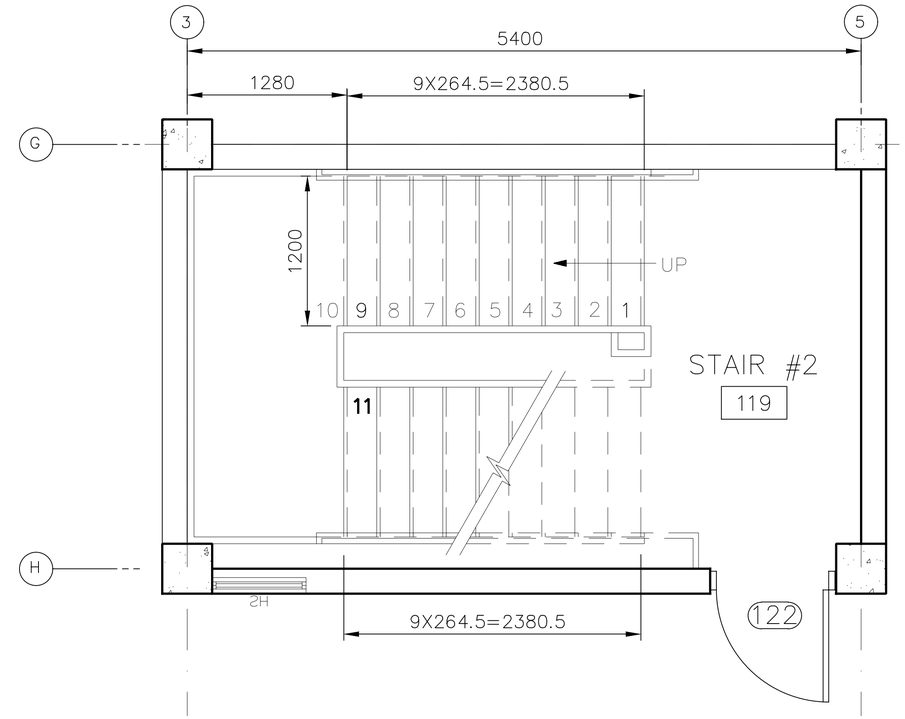

ENLARGED PLAN (B / AA1 SA3)
SCALE=1:25

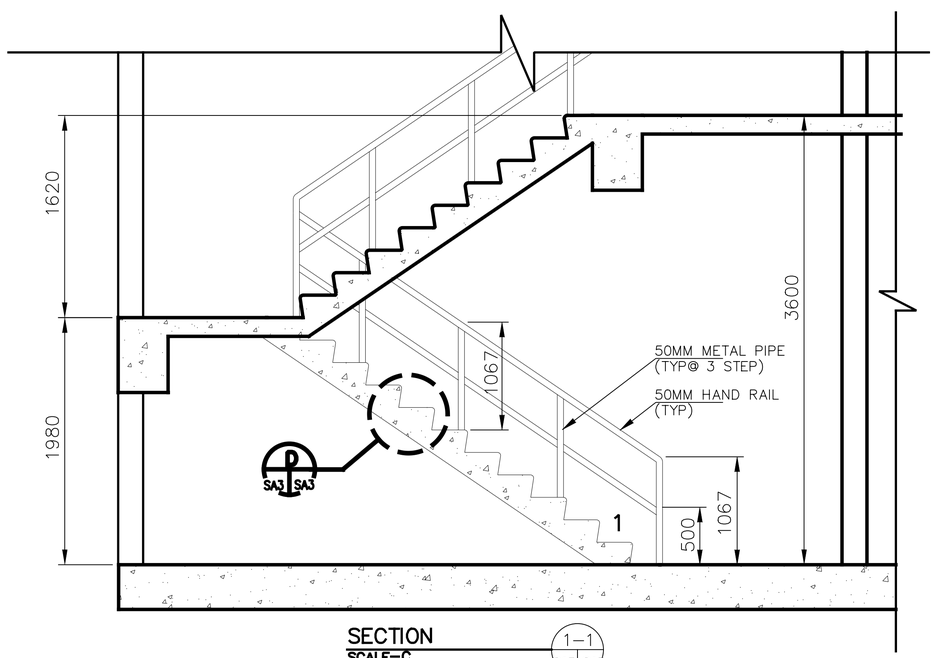

SECTION (1–1 / SA3 SA3)
SCALE=C

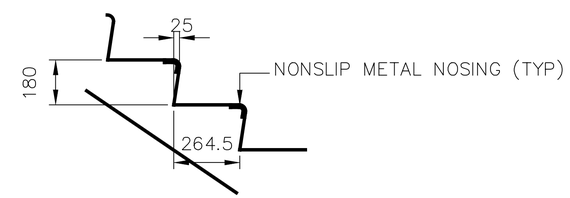

DETAIL (D / SA3 SA3)
SCALE=1:50

NOTE

1. **SEE STRUCTURAL DRAWINGS FOR RE BAR DETAILS**

1 .50 0 1 1.5
1:25

UNLESS OTHERWISE NOTED, LINEAR DIMENSIONS SHOWN ARE IN MILLIMETERS.

SYMBOL	DESCRIPTION	DATE	APP
1	STAIR DETAILS	19/03/2007	08A

DESIGNED BY: S. Hanna
DWN BY: S. Hanna
CHK BY:
DATE: 19 January 2009
SUBMITTED BY: PHILIP L. DINELLO, CHIEF, PDT FACILITIES DEV
FILE NO.: AF0701 $–ARO3DT

US Army Corps of Engineers
Transatlantic Programs Center

AFGHAN NATIONAL POLICE
UP DISTRICT HEADQUARTERS
(2 STORY)
AFGHANISTAN
STANDARD DETAILS
WALL TYPES

SHEET REFERENCE NUMBER:
SA–3

$DATE$
$FILE$

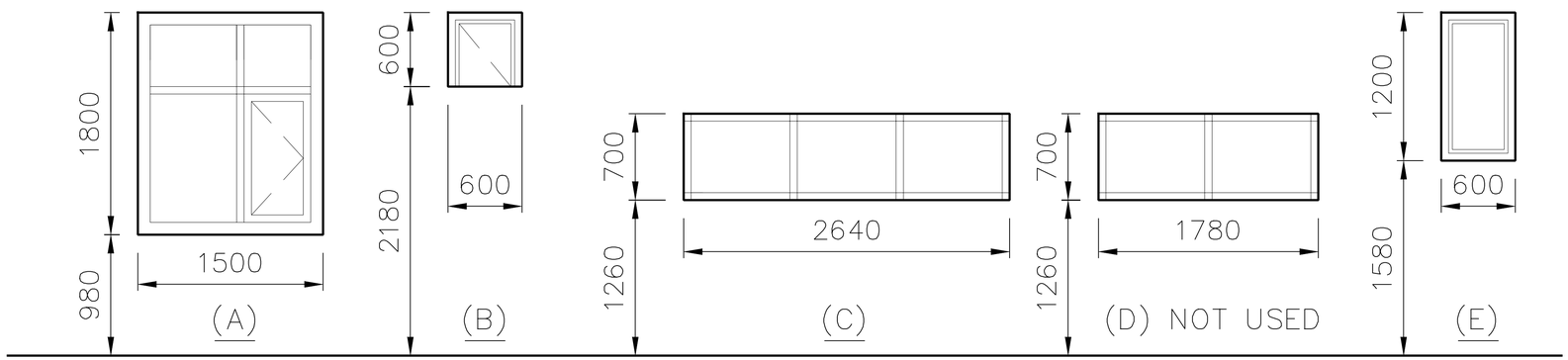

NOTE

1. ALL WINDOW SHALL HAVE 8mm PLEXI-GLASS GLAZING.
2. PROVIDE PROTECTIVE COATING AT ALL DISSIMILAR METALS CONTACT AREAS, WHERE APPROPRIATE
3. ALL OPERABLE EXTERIOR WINDOWS SHALL BE PROVIDED WITH INSECT SCREENS.

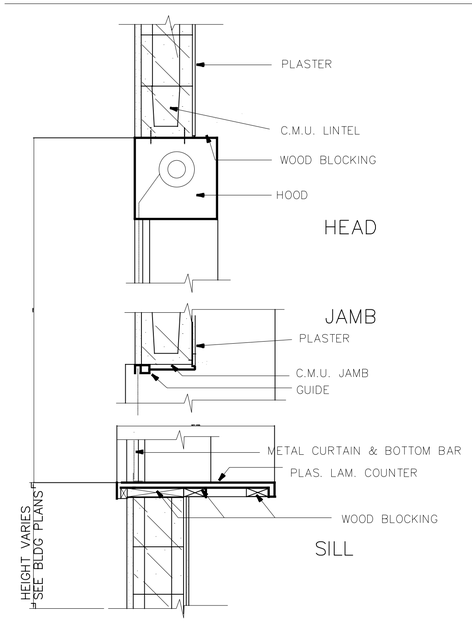

SECTION AT ROLL-UP COUNTER SHUTTER

SCALE 1:5

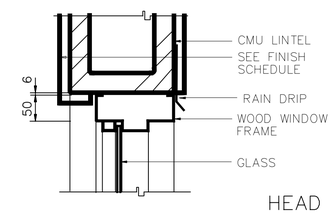

HEAD

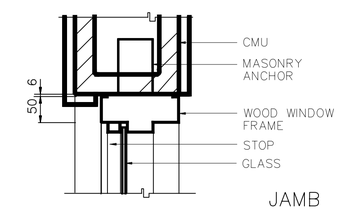

JAMB

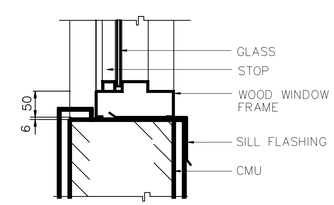

SILL

WINDOW SECTION AT CONC MASONRY WALL

SCALE 1:5

0 .10 .20 .30 .40 1
1:5

UNLESS OTHERWISE NOTED, LINEAR DIMENSIONS SHOWN ARE IN MILLIMETERS.

REVISIONS			
SYMBOL	DESCRIPTION	DATE	APP
		19/03/2007	

DESIGNED BY: S. Hanna
DATE: 19 January 2009
DWN BY: S. Hanna
SUBMITTED BY: PHILIP L. DINELLO, Center PDT Facilities Dev.
CHK BY:
FILE NO.: AF0701 $-AROHEL

US Army Corps of Engineers
Transatlantic Programs Center

AFGHAN NATIONAL POLICE
UP DISTRICT HEADQUARTERS
(2 STORY)
AFGHANISTAN
STANDARD DETAILS

WINDOW DETAILES

SHEET REFERENCE NUMBER:
SA-4

$DATE$
$FILE$

GENERAL NOTES

GENERAL

1. DESIGN REFERENCES:

   A. AMERICAN CONCRETE INSTITUTE (ACI) BUILDING CODE REQUIREMENTS FOR REINFORCED CONCRETE (ACI 318).

   B. SPECIFICATION FOR STRUCTURAL STEEL BUILDINGS – ALLOWABLE STRESS DESIGN AND PLASTIC DESIGN (S335).

   C. AMERICAN WELDING SOCIETY (AWS) STRUCTURAL WELDING CODE – STEEL (AWS D1.1).

   D. INTERNATIONAL BUILDING CODE (IBC–2003).

   E. BUILDING CODE REQUIREMENTS FOR MASONRY STRUCTURES (ACI 530–05).

   F. STEEL JOIST INSTITUTE (SJI) STANDARD SPECIFICATIONS, AND WEIGHT TABLES FOR STEEL JOIST AND JOIST GIRDERS.

   G. STEEL DECK INSTITUTE (SDI) DESIGN MANUAL FOR COMPOSITE DECKS, FORM DECKS, AND ROOF DECKS.

   H. MBMA MANUAL FOR LOW RISE BUILDINGS SYSTEMS.

2. DIMENSIONS PROVIDED IN SECTIONS OR DETAILS AND ON PLAN AND ELEVATION VIEWS ARE SHOWN USING MILLIMETERS, UNLESS OTHERWISE NOTED.

3. ALL BUILDING ELEVATIONS ARE GIVEN AS REFERENCE ELEVATIONS TO THE FINISHED GROUND FLOOR ELEVATION. A REFERENCE FLOOR ELEVATION OF 100.00 IS USED FOR THE FINISHED GROUND FLOOR.

4. CONTRACTOR SHALL VERIFY ALL DIMENSIONS AND CONDITIONS AFFECTING THE WORK AT THE JOB SITE.

5. ALL STRUCTURAL WORK AND MATERIALS SHALL CONFORM TO THE REQUIREMENTS OF THE PROJECT SPECIFICATIONS.

6. DO NOT SCALE DRAWINGS.

7. FOR LOCATION AND DIMENSIONS OF PARTITIONS, DEPRESSIONS, GROOVES, SLEEVES, CURBS, OPENINGS, EMBEDDED OR ATTACHED ITEMS, REFER TO ARCHITECTURAL, MECHANICAL, ELECTRICAL, AND PLUMBING DRAWINGS

8. FOR ADDITIONAL INFORMATION REFER TO INDIVIDUAL SHEETS FOR EACH STRUCTURE.

9. METAL BUILDING SYSTEMS SHALL BE AS REQUIRED IN THE SPECIFICATIONS.

10. FOOTING ELEVATIONS GIVEN ARE AT TOP OF FOOTING BASE.

11. ALL STRUCTURES SHALL BE FOUNDED ENTIRELY ON NATURAL MATERIAL OR ENTIRELY ON COMPACTED STRUCTURAL FILL, FOR STRUCTURES FOUNDED ON BEDROCK, PROVIDE A MEDIUM OF LEAN CONCRETE HAVING A MINIMUM 28–DAY COMPRESSIVE STRENGTH OF 14 MPA (2000 PSI) BETWEEN FOOTING BASES AND BEDROCK LAYER, AS REQUIRED.

12. ALL FOOTING EXCAVATIONS SHALL BE INSPECTED AND APPROVED BY THE CONTRACTING OFFICER OR HIS APPROVED AGENT PRIOR TO PLACING CONCRETE.

CONCRETE

1. EMBEDDED MATERIAL:

   A. BEFORE PLACING CONCRETE, CARE SHALL BE TAKEN TO INSURE THAT ALL EMBEDDED ITEMS ARE IN POSITION AND SECURELY FASTENED IN PLACE.

   B. ELECTRIC CONDUITS AND PIPING TO BE EMBEDDED IN CONCRETE SHALL MEET THE APPLICABLE REQUIREMENTS OF ACI 38.

   C. WATERSTOPS, WHERE REQUIRED, SHALL BE MADE CONTINUOUS, ALL PROJECTING WATERSTOPS SHALL BE SUPPORTED AND PROTECTED FROM DAMAGE DURING CONSTRUCTION.

2. PROVIDED 20 MILLIMETER CHAMFER FOR ALL EXPOSED EDGES OF COLUMNS, BEAMS, WALLS AND ANY OTHER MEMBERS AS DIRECTED BY THE CONTRACTING OFFICER.

3. EVERY INTERIOR SLAB–ON–GRADE SHALL HAVE ONE LAYER OF ASPHALT IMPREGNATED 30# BUILDING FELT BETWEEN THE SLAB AND ADJACENT WALL, UNLESS OTHERWISE NOTED.

4. PROVIDE APPROPRIATE DEPRESSION IN SLABS FOR TILE OR OTHER SIMILAR MATERIALS. MAINTAIN FULL SLAB THICKNESS BELOW THESE DEPRESSIONS. SEE ARCHITECTURAL INTERIOR FINISH SCHEDULES, FLOOR PLANS, AND DETAILS FOR REQUIRED DEPRESSIONS.

5. JOINTS SHALL BE LOCATED AS SHOWN ON DRAWINGS.

6. FOR SLABS ON GRADE, CONTROL JOINTS SHALL BE LOCATED NOT MORE THAN 7.6 METERS APART IN EITHER DIRECTION.

7. CONSTRUCTION JOINTS FOR STRUCTURAL SLABS, BEAMS AND GIRDERS SHALL BE LOCATED WITHIN THE MIDDLE THIRD OF THEIR SPAN. JOINTS IN GIRDERS SHALL BE OFFSET A MINIMUM DISTANCE OF TWO TIMES THE WIDTH OF AN INTERSECTING BEAM.

8. A SET OF DRAWINGS SHOWING CONCRETE PLACING SEQUENCE AND LOCATION OF JOINTS SHALL BE SUBMITTED TO THE CONTRACTING OFFICER FOR APPROVAL PRIOR TO PREPARATION OF AFFECTED REINFORCING SHOP DRAWINGS.

9. ALL REINFORCING BARS SHALL BE PLACED IN ACCORDANCE WITH ACI BUILDING CODE (ACI–318).

10. ALL REINFORCING BARS SHALL BE DEFORMED BILLET–STEEL CONFORMING TO ASTM A–615, GRADE 60 OR APPROVED EQUAL WITH THE FOLLOWING MINIMUM REQUIREMENTS: MINIMUM YIELD STRENGTH 413 MPa (60,000 PSI).

11. WELDED WIRE FABRIC SHALL BE COLD DRAWN CONFORMING TO ASTM A–185, GRADE 60, OR APPROVED EQUAL WITH THE FOLLOWING MINIMUM REQUIREMENTS: MINIMUM YIELD STRENGTH 413 MPa (60,000 PSI).

12. DETAILING OF REINFORCEMENT SHALL BE IN ACCORDANCE WITH THE LATEST ACI MANUAL FOR DETAILING (SP–66)

13. DIMENSION AND SPACING OF BARS ARE IN MILLIMETERS UNLESS OTHERWISE NOTED. THUS, ø 19 X 300 LG.

14. CONCRETE SHALL HAVE A MINIMUM 28 DAY COMPRESSIVE STRENGTH OF 28 MPa (4,000 PSI) AND CONTAIN ASTM C–150 TYPE I CEMENT UNLESS OTHERWISE NOTED.

15. REINFORCEMENT MAY BE MOVED WITH APPROVAL OF THE CONTRACTING OFFICER TO CLEAR PIPES, SEALS, RECESSES, EMBEDDED METAL WORK AND CONDUITS.

16. CLEAR CONCRETE COVER FOR REINFORCING BARS IN CAST–IN–PLACE CONCRETE SHALL BE PROVIDED AS FOLLOWS, UNLESS OTHERWISE NOTED:

    A. FOOTINGS OR BEAMS CAST AGAINST AND PERMANENTLY EXPOSED TO EARTH: 75mm
    B. FORMED SURFACES EXPOSED TO WEATHER OR EARTH:
       (1) 16 BARS OR SMALLER: 40mm
       (2) ALL OTHERS: 50 mm
    C. FORMED SURFACES NOT EXPOSED DIRECTLY TO WEATHER OR EARTH:
       (1) SLABS, WALLS: 20mm
       (2) BEAMS, GIRDERS, COLUMNS:
       PRINCIPLE REINFORCEMENT, TIES OR STIRRUPS: 40mm

17. REINFORCEMENT SHALL BE CONTINUOUS THROUGH ALL CONSTRUCTION JOINTS, BUT DISCONTINUOUS AT ALL CONTROL JOINTS, UNLESS OTHERWISE INDICATED.

18. REINFORCING BARS SHALL NOT BE BENT OR STRAIGHTENED IN A MANNER THAT WILL INJURE THE MATERIAL. BARS WITH KINKS OR IMPROPER BENDS SHALL NOT BE USED.

19. THE FIRST AND LAST BAR IN SLABS AND WALLS SHALL BE PLACED AT A MAXIMUM OF ONE–HALF OF THE BAR SPACING SHOWN, UNLESS OTHERWISE NOTED.

20. THE CLEAR DISTANCE BETWEEN PARALLEL BARS IN A LAYER SHALL NOT BE LESS THAN THE NOMINAL DIAMETER OF THE BAR, NOR 25mm. THE CLEAR DISTANCE BETWEEN LONGITUDINAL BARS IN COLUMNS SHALL NOT BE LESS THAN 1.5 TIMES THE NOMINAL BAR DIAMETER NOR 40mm OF THE CURRENT AWS, D1.1, STRUCTURAL WELDING CODE – STEEL.

21. PROVIDE 1– ø 13 REBAR IN MID–DEPTH OF SLAB AT ALL RE–ENTRANT CORNERS.

22. PROVIDE SEALANT INDICATED AT ALL CONTROL AND ISOLATION JOINTS. WHERE CONCRETE SLAB WORK WILL NOT BE COVERED BY SOME OTHER FINISH FLOOR MATERIAL, PROVIDE TOOLED CONTROL JOINTS HAVING A RADIUS OF 3mm.

STRUCTURAL STEEL

1. ALL METAL WORK SHOWN ON DRAWINGS SHALL BE FABRICATED OF STRUCTURAL STEEL UNLESS OTHERWISE NOTED.

2. DESIGN OF STRUCTURAL STEEL WORK SHALL BE IN ACCORDANCE WITH THE REQUIREMENTS OF THE SPECIFICATION FOR STRUCTURAL STEEL BUILDINGS – ALLOWABLE STRESS DESIGN AND PLASTIC DESIGN (S335).

3. ALL WELDING SHALL BE IN ACCORDANCE WITH THE APPLICABLE REQUIREMENTS OF THE CURRENT AWS, D1.1, STRUCTURAL WELDING CODE – STEEL.

4. WHERE WELD SIZE IS NOT CALLED OUT, USE AISC MINIMUM SIZE.

5. STRUCTURAL STEEL SHALL CONFORM TO THE REQUIREMENTS OF ASTM A500, GRADE B FOR STRUCTURAL TUBING AND ASTM A36 FOR OTHER STRUCTURAL SHAPES (UNLESS OTHERWISE NOTED).

6. ALL BOLTED CONNECTIONS SHALL BE BEARING TYPE CONNECTIONS MADE WITH ø19 BOLTS MEETING REQUIREMENTS OF ASTM A36 FOR OTHER STRUCTURAL SHAPES (UNLESS OTHERWISE NOTED).

7. SHOP CONNECTIONS MAY BE BOLTED OR WELDED. ALL FIELD CONNECTIONS SHALL BE BOLTED UNLESS OTHERWISE SHOWN ON THE DRAWINGS.

8. UNLESS OTHERWISE NOTED, BEAM END CONNECTIONS SHALL CONFORM TO AISC STANDARD TWO ANGLE WEB CONNECTIONS, WHETHER BOLTED OR WELDED, EACH END CONNECTION SHALL BE CAPABLE OF SUPPORTING ONE–HALF THE TOTAL UNIFORM LOAD CAPACITY SHOWN IN THE ALLOWABLE UNIFORM LOAD TABLES. PART II OF THE AISC MANUAL OF STEEL CONSTRUCTION, HOLES WILL BE SHORT AND SLOTTED IN THE OUTSTANDING ANGLE LEGS (THOSE CONNECTED TO THE SUPPORTING MEMBER) AND STANDARD OTHERWISE.

SHAPE (MM)	MASS (Kgs/M)	BOLT ROWS N(MIN)	N(MAX)
	262–82		
W610	248–66	4	7
W530	213–52	4	6
W460	149–39	3	5
W410	196–134	3	4
W360	122–64	3	3
W360	58–33	2	3
W360	129–60	2	4
W310	52–21	2	3
W310	167–49	2	3
W250	45–18	2	2
W250	100–36	2	3
W200	31–15	2	2
W200		2	2

VALUES OF N ARE BASED ON ROW SPACING OF 75 MILLIMETERS AND AN EDGE DISTANCE OF 30 MILLIMETERS.

9. ALL ANCHOR BOLTS SHALL BE ASTM A36, EXCEPT AS OTHERWISE NOTED.

10. STRUCTURAL STEEL DESIGN IS BASED ON ALLOWABLE STRESS DESIGN.

UNLESS OTHERWISE NOTED, LINEAR DIMENSIONS SHOWN ARE IN MILLIMETERS.

SYMBOL	DESCRIPTION	DATE	APP

DESIGNED BY: RG
DATE: 19 January 2009
DWN BY: TCP
SUBMITTED BY: PHILIP L. DINELLO, Chief, PCX Facilities Dev.
CHK BY: KGO
FILE NO.: AF0701 ♦–SS01GN

US Army Corps of Engineers
Transatlantic Programs Center

AFGHAN NATIONAL POLICE
UP DISTRICT HEADQUARTERS
(2 STORY)
AFGHANISTAN
STANDARD DETAILS
GENERAL NOTES

SHEET REFERENCE NUMBER:
SS–1

$DATE$
$FILE$

LEGENDS AND NOTATIONS:

A. PLATE SIZES ARE GIVEN IN MILLIMETERS, THUS, PL 10 X 200 X 600.

B. ROLLED STEEL SHAPES ARE INDICATED BY AISC METRIC NOTATION THUS, W200 X 150.

C. ANGLE SIZES ARE GIVEN IN MILLIMETERS. THUS, 100 X 100 X 600 LG.

D. WELDING NOTATION SIZE, LENGTH AND SPACING ARE GIVEN IN MILLIMETERS WITH SYMBOLS IN ACCORDANCE WITH AWS.

E. BOLT SIZE AND LENGTH ARE GIVEN IN MILLIMETERS, THUS, 19Ø X 300 LG.

ABBREVIATIONS

A.B.	ANCHOR BOLT
ADD	ADDED OR ADDITIONAL
AFF	ABOVE FINISH FLOOR
ARCH	ARCHITECTURAL
@	AT THE RATE OF
BM	BEAM
BRG	BEARING
B OR BOT	BOTTOM
℄	CENTERLINE
CONC	CONCRETE
CJ	CONTROL JOINT
CJT	CONSTRUCTION JOINT
CIP	CAST–IN–PLACE
COL	COLUMN
CONT	CONTINUOUS
DIA OR Ø	DIAMETER
DIR	DIRECTION
DWG	DRAWING
EE	EACH END
EF	EACH FACE
⊕ OR ELEV	ELEVATION
ES	EACH SIDE
EW	EACH WAY
EJT	EXPANSION JOINT
FF	FAR FACE
FTG	FOOTING
FDN	FOUNDATION
GB	GRADE BEAM
H OR HORZ	HORIZONTAL
HP	HIGH POINT
IJ	ISOLATION JOINT
JT	JOINT
KSM	KILOGRAMS PER SQUARE METER
LG	LONG
LL	LOWER LAYER
LP	LOW POINT
MCJ	MASONRY CONTROL JOINT
M	METERS
MM	MILLIMETERS
MAX	MAXIMUM
MECH	MECHANICAL
MIN	MINIMUM
NF	NEAR FACE
NO OR #	NUMBER
NTS	NOT TO SCALE
O/C	ON CENTER
OPNG	OPENING
PC	PRECAST
PEJ	PRE MOLDED EXPANSION JOINT
PL	PLATE
PSF	POUNDS PER SQUARE FOOT
PSI	POUNDS PER SQUARE INCH
REINF	REINFORCEMENT
REF	REFERENCE
REQ	REQUIRED
SCH	SCHEDULE
SHT	SHEET
SIM	SIMILAR
STD	STANDARD
SQ	SQUARE
T	TOP
TB	TIE BEAM
T & B	TOP AND BOTTOM
TOC	TOP OF CONCRETE
TOF	TOP OF FOOTING
TOS	TOP OF SLAB OR TOP OF STEEL
TYP	TYPICAL
UL	UPPER LAYER
UON	UNLESS OTHERWISE NOTED
VERT	VERTICAL
WWF	WELDED WIRE FABRIC
WP	WORKING POINT
W/	WITH

SPLICES

LOCATION OF SOME SPLICES ARE SHOWN ON DRAWINGS. SPLICES NOT SHOWN ON DRAWINGS SHALL BE IN ACCORDANCE WITH THE APPLICABLE REQUIREMENTS FOR DETAILING REINFORCEMENT AND AS APPROVED BY THE CONTRACTING OFFICER.

WHEN REINFORCEMENT OF DIFFERENT SIZE SPLICES, THE LAP LENGTH IS GOVERNED BY THE SMALLER BAR UNLESS NOTED OTHERWISE.

WALL AND SLAB REINFORCEMENT SPLICES ARE TO BE MADE SO THAT REQUIRED CLEARANCES ARE MAINTAINED.

TENSION LAP SPLICES		
AS (PROVIDED) / AS (REQUIRED)	MAXIMUM % OF REBARS SPLICED WITHIN REQ. LAP LENGTH	
	50	100
EQUAL TO OR GREATER THAN 2	CLASS A	CLASS B
LESS THAN 2	CLASS B	CLASS B

TENSION LAP SPLICE LENGTH SHALL BE AS FOLLOWS:

FOR CLASS "A" SPLICES 1.0 ld
FOR CLASS "B" SPLICES 1.3 ld

WHERE ld IS THE BASIC TENSION DEVELOPMENT LENGTH.

BASIC TENSION DEVELOPMENT ld (mm)& TENSION DOWEL EMBEDMENT LENGTH

CONCRETE 28 MPa	TYPE OF BARS	BAR SIZE #3	#4	#5	#6	#7	#8	#9	#10	#11
TOP	BARS	400	500	600	700	800	1000	1200	1600	2000
	OTHER	300	400	450	600	600	750	950	1200	1500

NOTES:

1. FOR BARS WITH CLEAR SPACING NOT LESS THAN 5 TIMES BAR DIAMETER AND WITH COVER FROM FACE OF MEMBER TO EDGE BARS, MEASURED IN THE PLANE OF THE BARS, NOT LESS THAN 2.5 TIMES BAR DIAMETER USE 0.8 ID, BUT THE LAP SPLICE LENGTH SHALL NOT BE LESS THAN 300mm.
2. TOP BARS ARE HORIZONTAL AND INCLINED REINFORCING BARS PLACED SO THAT MORE THAN 300mm OF CONCRETE IS CAST IN THE MEMBER BELOW THE BARS.

STANDARD COMPRESSION LAP SPLICE LENGTH (MM)

BAR SIZE	#3	#4	#5	#6	#7	#8	#9	#10	#11
SPLICE LENGTH	300	380	480	580	660	760	860	960	1070

BASIC COMPRESSION DEVELOPMENT (MM) & COMPRESSION DOWEL EMBEDMENT LENGTH

CONCRETE	BAR SIZE #3	#4	#5	#6	#7	#8	#9	#10	#11
4000 PSI	200	250	300	360	420	480	550	610	680

ALL BARS MARKED CONTINUOUS SHALL BE PROPERLY LAPPED AT SPLICES AND CORNERS AND HOOKED AT NON–CONTINUOUS ENDS.

DESIGN LOADS

SERVICE LOADS

DEAD ----------CALCULATED
LIVE ----------REFER TO INDIVIDUAL SHEETS

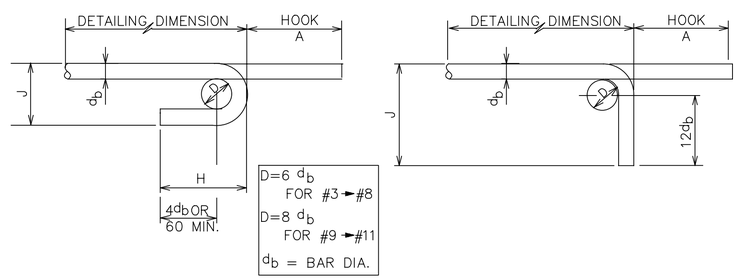

SIZES OF 180° HOOK			
BAR SIZE	A	J	APPROX H
# 3	130	80	100
# 4	150	100	110
# 5	180	130	130
# 6	200	150	150
# 7	250	180	180
# 8	280	200	200
# 9	380	290	260
#10	430	320	290
#11	480	360	320

SIZES OF 90° HOOK		
BAR SIZE	A	J
# 3	140	150
# 4	190	220
# 5	230	270
# 6	270	320
# 7	320	370
# 8	370	430
# 9	420	480
#10	470	580
#11	520	610

FILLET WELD STRENGTH *	
SIZE INCHES	STRENGTH KIPS/INCH
1/8	1.86
3/16	2.78
1/4	3.71
5/16	4.64
3/8	5.57
7/16	6.50
1/2	7.42
9/16	8.35

*AWS A5.1 OR A5.5 E70 XX ELECTRODES FOR A36 MATCHING BASE MATERIAL

BAR BENDING DETAILS

EQUIVALENT REINFORCING BAR SIZE CHART

ACI DESIGNATION	METRIC DIAMETER (MM)
#3	Ø10
#4	Ø13
#5	Ø16
#6	Ø19
#7	Ø22
#8	Ø25
#9	Ø29
#10	Ø32
#11	Ø36

EQUIVALENT STEEL FABRIC SIZE CHART		
WIRE REINFORCING INSTITUTE DESIGNATION	METRIC SIZES (MM)	
	WIRE SPACING	WIRE DIAMETER
6 x 6 – W1.4 x W1.4	150 x 150	3.0 x 3.0
6 x 6 – W2.1 x W2.1	150 x 150	4.0 x 4.0
6 x 6 – W2.9 x W2.9	150 x 150	5.0 x 5.0
6 x 6 – W4.0 x W4.0	150 x 150	6.0 x 6.0

UNLESS OTHERWISE NOTED, LINEAR DIMENSIONS SHOWN ARE IN MILLIMETERS.

SYMBOL	DESCRIPTION	DATE	APP

DESIGNED BY: RG
DATE: 19 January 2009
DWN BY: TOP
SUBMITTED BY: PHILIP L. DINELLO Center PDT ACTIVITIES DEV
CHK BY: KGO
FILE NO.: AF0701 ♦–SB02GN

US Army Corps of Engineers
Transatlantic Programs Center

AFGHAN NATIONAL POLICE
UP DISTRICT HEADQUARTERS
(2 STORY)
AFGHANISTAN
STANDARD DETAILS
NOTATIONS AND BAR DEVELOPMENT LENGTHS

SHEET REFERENCE NUMBER:
SS–2

$DATE$
$$FILE$

MASONRY LINTEL SCHEDULE			
OPENING WIDTH	NOMINAL SIZE	REBAR BOTTOM	DETAIL
0–1800	200X200	2–Ø13	A
1800–2000	200X200	2–Ø16	A
2000–2200	200X200	2–Ø19	A
2200–4000	200X400	2–Ø13	B
4000–4400	200X400	2–Ø16	B
4400–4600	200X400	2–Ø19	B
0–1350	150X200	1–Ø13	C

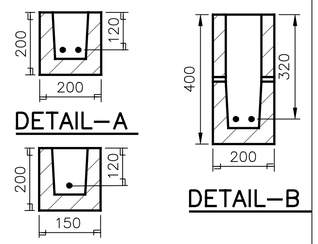

DETAIL
SCALE=N.T.S.
A
SS–3 SS–3

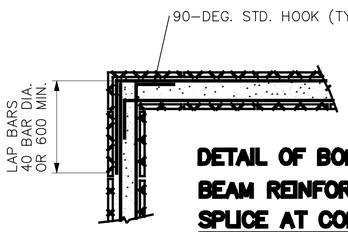

DETAIL OF BOND BEAM REINFORCING SPLICE AT CORNER
N.T.S.

DETAIL
SCALE=N.T.S.
B
SS–3 SS–3

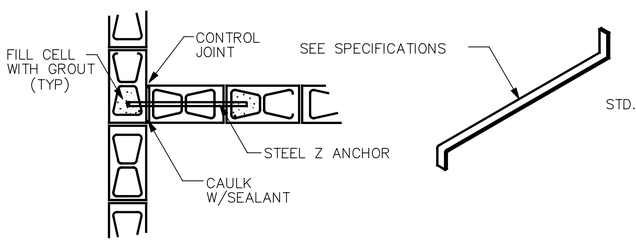

INTERSECTION OF WALLS OR PARTITIONS
SEE NOTES 10 AND 11

DETAIL
SCALE=N.T.S.
C
SS–3 SS–3

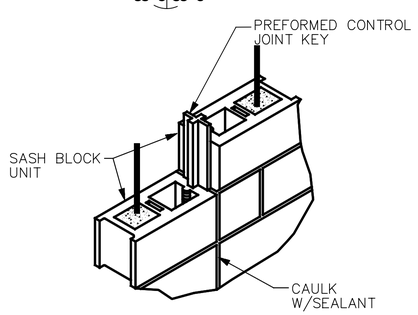

MASONRY CONTROL JOINT DETAILS

DETAIL
SCALE=N.T.S.
D
SS–3 SS–3

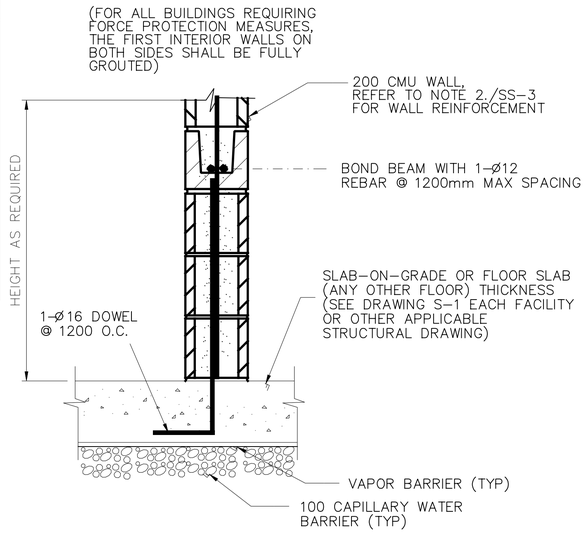

INTERIOR WALL DETAIL
SCALE: 1:10

DETAIL
SCALE=N.T.S.
E
SS–3 SS–3

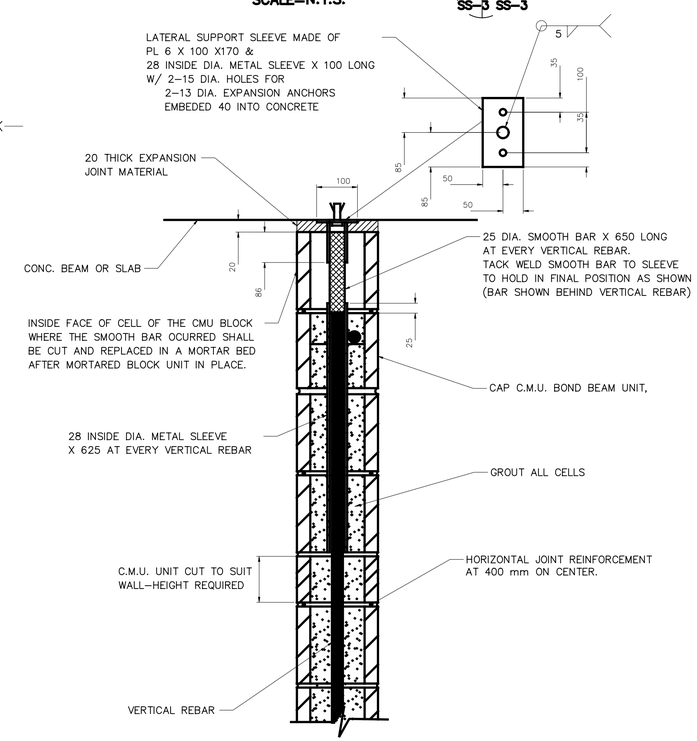

TOP LATERAL SUPPORT FOR C.M.U. EXTERIOR WALLS

DETAIL
SCALE=N.T.S.
F
SS–3 SS–3

MASONRY NOTES:

1. WORK THIS SHEET WITH ARCHITECTURAL SHEETS.
2. EXCEPT AS AND WHERE SPECIFICALLY NOTED OR INDICATED ON THE DRAWINGS, VERTICAL AND HORIZONTAL REINFORCEMENT FOR THE CMU WALLS SHALL BE AS FOLLOWS:

   A. 200 CMU WALLS

   1. 1Ø @ 600 VERTICAL AT EXTERIOR WALLS
   2. 1Ø @ 1000 VERTICAL AT INTERIOR WALLS
   3. 9 GAGE SIDE RODS @ 400 LADDER TYPE HORIZONTAL JOINT REINFORCEMENT
   4. 1– 1Ø BOND BEAMS @ 1000
   5. 2– 1Ø AT CAP–BOND BEAMS

3. IN ADDITION TO JOINT REINFORCEMENT IDENTIFIED FOR PLACEMENT IN NOTE 2 ABOVE, PROVIDE JOINT REINFORCEMENT ADJACENT TO SILLS AND HEADS OF ALL OPENINGS HAVING A MASONRY WIDTH GREATER THAN 1.60 METERS. EXTEND (OR OTHERWISE ANCHOR) SUCH REINFORCEMENT A MINIMUM OF 600 MILLIMETERS BEYOND EACH FACE OF OPENING.
4. DISCONTINUE BOND BEAM AND JOINT REINFORCEMENT AT MASONRY CONTROL JOINTS UNLESS OTHERWISE NOTED.
5. UNLESS NOTED OTHERWISE, PROVIDE A MINIMUM OF 2– 13 REBAR IN LINTEL BEAMS SPANNING MASONRY OPENINGS HAVING A WIDTH GREATER THAN ONE METER. EXTEND (OR OTHERWISE ANCHOR) SUCH REINFORCEMENT A MINIMUM OF 600 MILLIMETERS BEYOND EACH FACE OF OPENING.
6. WHERE REINFORCEMENT FOR A BOND BEAM AND LINTEL ARE ALIGNED WITHIN A MINIMUM OF 600 MILLIMETERS BEYOND EACH FACE OF OPENING. A MASONRY COURSING EXTEND (OR OTHERWISE ANCHOR) REBAR FOR THE LINTEL
7. PROVIDE A MASONRY BOND TO INTERSECTING LOAD–BEARING WALLS AT CORNERS ONLY. WHERE A LOAD–BEARING WALL TERMINATES AT THE FACE OF ANOTHER LOAD–BEARING WALL, PROVIDE A CONTROL JOINT. FOR LATERAL SUPPORT BETWEEN SUCH WALLS PROVIDE STEEL TIE BARS, SPACED NOT MORE THAN 800 MM ON CENTER VERTICALLY.
8. IN ADDITION TO THE VERTICAL REINFORCEMENT INDICATED ON WALL DETAILS FOR PLACEMENT, PROVIDE 1 – 13 REBAR ADJACENT TO SIDES OF MASONRY OPENINGS.
9. CMU BLOCK DETAILS SHALL MATCH DETAILING OF EXISTING BUILDINGS ON SITE.
10. THERE SHALL BE A FOUNDATION DOWEL FOR EACH VERTICAL REINFORCING BAR. FOUNDATION DOWELS SHALL EXTEND A MINIMUM OF 30 DIAMETERS INTO THE THE FOUNDATION CONCRETE, AND 40 DIAMETERS OR 600 MINIMUM INTO THE MASONRY WALL. LAPS OR SPLICES OF REINFORCING STEEL IN MASONRY SHALL BE 40 DIAMETERS OR 600 MINIMUM.
11. PROVIDE MASONRY CONTROL JOINT LOCATIONS WITHOUT CUTTING BLOCK. MAXIMUM SPACING OF CONTROL JOINTS SHALL BE 7.2 METERS.
12. ALL CELLS OF EXTERIOR WALLS SHALL BE FULLY GROUTED.

STEEL ANGLE LINTEL SCHEDULE FOR 100 THICK C.M.U. OR BRICK VENEER WALLS	
OPNG. WIDTH	STEEL ANGLE SIZE
UP TO 1.22 M.	L 89X89X6.4
UP TO 1.52 M.	L 102X89X6.4
UP TO 1.98 M.	L 127X89X7.9
UP TO 2.44 M.	L 152X89X9.5

NOTE:

1. PROVIDE 150 MINIMUM BEARING AT EACH END OF OPENING.
2. USE L 152X89X9.5 FOR OPENING UP TO 4.30 M. AT MECH. LOUVERS OPENINGS IN MAIN TERMINAL BUILDING.

0 .50 1.00
1:10
UNLESS OTHERWISE NOTED, LINEAR DIMENSIONS SHOWN ARE IN MILLIMETERS.

SYMBOL | DESCRIPTION | DATE | APP

DESIGNED BY: RG
DWN BY: TCP
CHK BY: KGO
DATE: 19 January 2009
SUBMITTED BY: PHILIP L. DINELLO Chief, PCX Facilities Dev
FILE NO.: AF0701 & SB03DT

US Army Corps of Engineers
Transatlantic Programs Center

AFGHAN NATIONAL POLICE
UP DISTRICT HEADQUARTERS
(2 STORY)
AFGHANISTAN
STANDARD DETAILS
MASONRY DETAILS

SHEET REFERENCE NUMBER:
SS–3

$$DATE$
$$FILE$

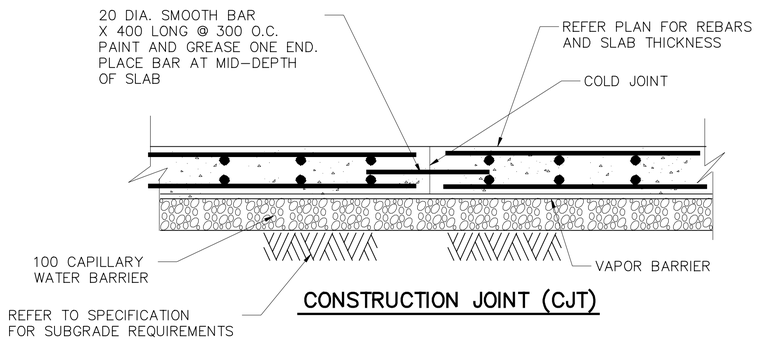

CONSTRUCTION JOINT (CJT)

DETAIL
SCALE=N.T.S.
A
SS-4 SS-4

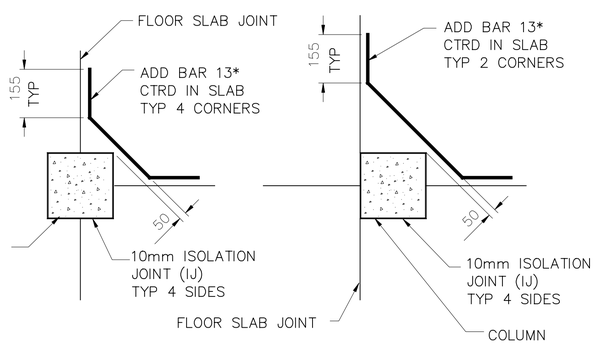

TYPICAL SLAB JOINT DETAIL AROUND COLUMNS

DETAIL
SCALE=N.T.S.
C
SS-4 SS-4

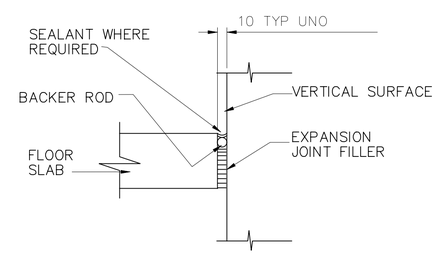

TYPICAL SLAB ISOLATION JOINT (IJ) DETAIL

NTS

DETAIL
SCALE=N.T.S.
C
SS-4 SS-4

UNLESS OTHERWISE NOTED, LINEAR DIMENSIONS SHOWN ARE IN MILLIMETERS.

SYMBOL	DESCRIPTION	DATE	APP

DESIGNED BY: RG
DWN BY: TCP
CHK BY: KGO
DATE: 19 January 2009
SUBMITTED BY: PHILIP L. DINELLO
Center POT FACILITIES DEV
FILE NO.: AF0701 $-SS04DT

US Army Corps of Engineers
Transatlantic Programs Center

AFGHAN NATIONAL POLICE
UP DISTRICT HEADQUARTERS
(2 STORY)
AFGHANISTAN
STANDARD DETAILS
SLAB-ON-GRADE DETAILS

SHEET REFERENCE NUMBER:
SS-4

$DATE$
$FILE$

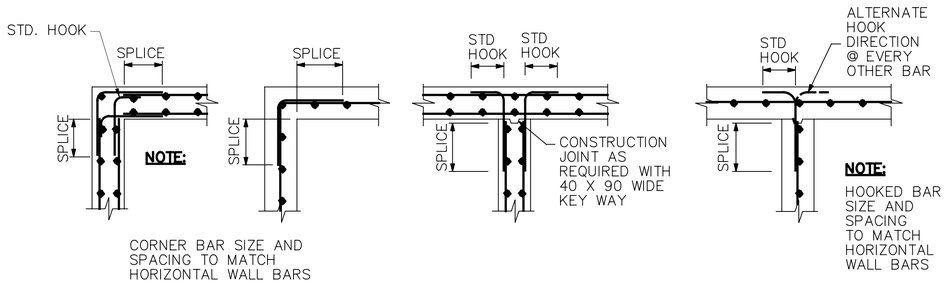

AT CORNERS

AT INTERSECTIONS

TYPICAL WALL AND GRADE BEAM REINFORCEMENT DETAILS

DETAIL
SCALE=N.T.S.
A
SS-5 SS-5

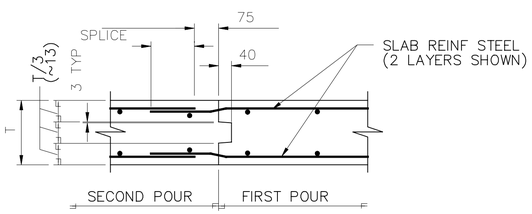

NOTE:

1. LOCATE CONSTRUCTION JOINTS BETWEEN ¼ TO 1/3 POINT OF THE SLAB SPAN. ALL CONSTRUCTION JOINT LOCATIONS NOT SPECIFICALLY INDICATED SHALL BE APPROVED BY THE CONTRACTING OFFICER PRIOR TO CONSTRUCTION.

2. AT CONTRACTORS OPTION, STANDARD LAP MAY BE OMITTED BY PROVIDING CONTINUOUS REINFORCEMENT.

IN SLABS

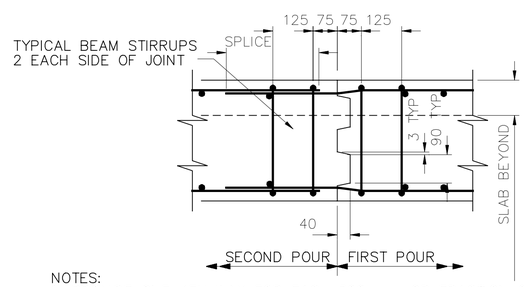

NOTES:
1. PROVIDE ONE KEY WAY FOR EACH 300 mm OR FRACTION OF BEAM DEPTH DISCONTINUE KEY WAY AT A DISTANCE OF 60mm FROM EXPOSED SURFACES.

2. LOCATE CONSTRUCTION JOINTS BETWEEN ¼ TO 1/3 POINT OF THE SPAN ALL CONSTRUCTION JOINT LOCATIONS NOT SPECIFICALLY INDICATED SHALL BE APPROVED BY THE CONTRACTING OFFICER PRIOR TO CONSTRUCTION.

3. AT CONSTRUCTION OPTION STANDARD LAP MAY BE OMITTED BY PROVIDING CONTINUOUS REINFORCEMENT.

IN JOISTS, BEAMS AND GIRDERS

TYPICAL ELEVATED SLAB SYSTEM CONSTRUCTION JOINT DETAILS

NTS

DETAIL
SCALE=N.T.S.
C
SS-5 SS-5

0 .50 1.00
1:10

UNLESS OTHERWISE NOTED, LINEAR DIMENSIONS SHOWN ARE IN MILLIMETERS.

REVISIONS				
SYMBOL	DESCRIPTION	DATE	APP	
		19/03/2007		

DESIGNED BY: RG
DATE: 19 January 2009
DWN BY: TCP
SUBMITTED BY: PHILIP L. DINELLO Senior POI Facilities Dev.
CHK BY: KGO
FILE NO.: AF0701 $-SB050T

US Army Corps of Engineers
Transatlantic Programs Center

AFGHAN NATIONAL POLICE
UP DISTRICT HEADQUARTERS
(2 STORY)
AFGHANISTAN
STANDARD DETAILS
JOINT DETAILS

SHEET REFERENCE NUMBER:
SS-5

$DATE$
$FILE$

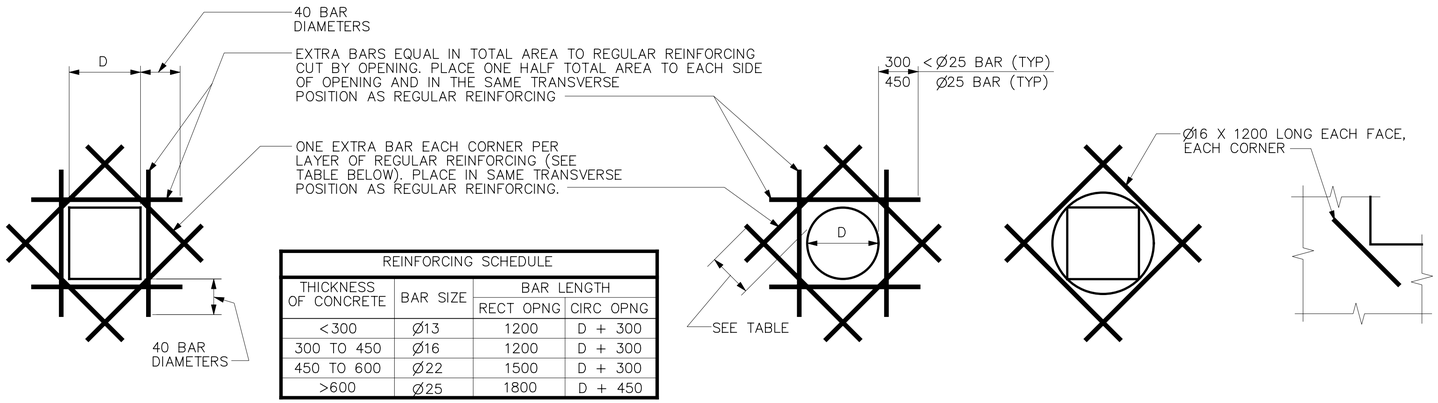

REINFORCING SCHEDULE			
THICKNESS OF CONCRETE	BAR SIZE	BAR LENGTH	
		RECT OPNG	CIRC OPNG
<300	Ø13	1200	D + 300
300 TO 450	Ø16	1200	D + 300
450 TO 600	Ø22	1500	D + 300
>600	Ø25	1800	D + 450

RECTANGULAR OPENINGS

CIRCULAR OPENINGS

FOR OPENINGS 500 AND SMALLER IN DIAMETER OR DIAGONAL

ISOLATED RE-ENTRANT CORNERS

FOR OPENING LARGER THAN 500 IN DIAMETER OR DIAGONAL

TYPICAL EXTRA REINFORCING AT OPENINGS IN WALLS AND SLABS

DETAIL A SS-6 SS-6
SCALE=N.T.S.

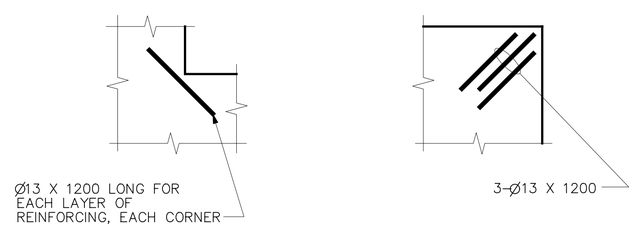

RE-ENTRANT CORNERS

EXTERIOR CORNERS

TYPICAL EXTRA REINFORCING IN SLABS ON GRADE

DETAIL B SS-6 SS-6
SCALE=N.T.S.

UNLESS OTHERWISE NOTED, LINEAR DIMENSIONS SHOWN ARE IN MILLIMETERS.

SYMBOL	DESCRIPTION	DATE	APP

DESIGNED BY: RG
DWN BY: TCP
CHK BY: KGO
DATE: 19 January 2009
SUBMITTED BY: PHILIP L. DINELLO, Center PDT Facilities Dev
FILE NO.: AF0701 ⇄ SS06DT

US Army Corps of Engineers
Transatlantic Programs Center

AFGHAN NATIONAL POLICE
UP DISTRICT HEADQUARTERS
(2 STORY)
AFGHANISTAN
STANDARD DETAILS
EXTRA REINFORCING AT OPENINGS AND CORNERS

SHEET REFERENCE NUMBER:
SS-6

$DATE$
$FILE$

PIPING LEGEND

SYMBOL	DESCRIPTION
	THREE-WAY VALVE (ANY TYPE OF OPERATOR)
	GATE VALVE
	BALL VALVE
	GLOBE VALVE
	ANGLE GLOBE VALVE
	PRESSURE RELIEF VALVE
	PRESSURE-TEMPERATURE RELIEF VALVE
	BALANCING COCK
	BUTTERFLY VALVE
	CHECK VALVE
	UNION (SCREWED)
	PRESSURE CONTROL VALVE (SELF-CONTAINED)
S	SOLENOID VALVE
M	MOTOR OPERATED CONTROL VALVE
	AIR ELIMINATOR
AAV	AIR VENT, AUTOMATIC
	AIR VENT, MANUAL
	BACK PRESSURE VALVE
	PRESSURE REDUCING VALVE
	"Y" STRAINER
	AIR VALVE
	TEMPERATURE REGULATING VALVE
	EXPANSION VALVE, HAND
	EXPANSION VALVE, THERMOSTATIC
T	THERMOMETER, DIAL TYPE
T	THERMOMETER, VERTICAL TYPE
P	PRESSURE GAGE
	RISER DOWN (ELBOW)
	RISER UP (ELBOW)
	PITCH DOWN IN DIRECTION OF FLOW
	RISE OR DROP
CHS	CHILLED WATER SUPPLY
CHR	CHILLED WATER RETURN
C	CONDENSATE DRAIN

SYMBOL	DESCRIPTION
	BRANCH CONNECTION OUT OF TOP
	BRANCH CONNECTION OUT OF BOTTOM
	BRANCH CONNECTION OUT OF SIDE
	CAP ON END OF PIPE
	CONCENTRIC REDUCER
	ECCENTRIC REDUCER
	ANCHOR POINT
	FLEXIBLE CONNECTION
FS	FLOW SWITCH
	EXPANSION JOINT
	FLUSH VALVE
HB HB	HOSE BIBB
	WATER FIXTURE
	MIXING FAUCET COLD & HOT WATER
DV	DRAIN VALVE
	SIGHT GLASS
FM	FLOW METER
	PET COCK
	FLOW DIRECTION
	INLINE-PUMP
	CALIBRATED BALANCE VALVE
T	AQUASTAT
M	MOTOR OPERATED BUTTERFLY VALVE

FACILITY DESIGNATION	
A	HEADQUARTERS
B,C	FUTURE BUILDINGS
D	GUARD HOUSE
E	GUARD TOWER
F	GUARD SHACK
H	WELL HOUSE
I	PUMP ROOM

* NO MECHANICAL WORK IN 'G' & 'J' FACILITIES

ABBREVIATIONS

AAV	AIR VENT AUTOMATIC
AC	AIR CURTAIN FAN
ACMH	ACTUAL CUBIC METERS PER HOUR
ACC	AIR COOLED CHILLER
ACCU	AIR COOLED CONDENSING UNIT
AF	AIR FILTER
AFF	ABOVE FINISHED FLOOR
AD	AREA DRAIN
AHU	AIR HANDLING UNIT
AP	ACCESS PANEL
BF	BOTTOM FLAT
BD	BALANCING DAMPER
BDD	BACKDRAFT DAMPER
BFP	BACKFLOW PREVENTER
BHP	BRAKE HORSEPOWER
BOD	BOTTOM OF DUCT
℃	DEGREES CELSIUS
CD	CEILING DIFFUSER
CHW	CHILLED WATER
CLG	CEILING
CM	CENTIMETER
CMH	CUBIC METER PER HOUR
CONN	CONNECTION
CONT	CONTINUATION
CW	CHILLED WATER COOLING COIL
D	DROP/DEPTH
DB	DRY BULB
DET	DETAIL
DIA	DIAMETER
DH	DUCT HEATER
DIFF	DIFFERENTIAL
DG	DOOR GRILLE
DN	DOWN
DWG	DRAWING
DX	DIRECT EXPANSION
EA	EXHAUST AIR
EAT	ENTERING AIR TEMPERATURE
EDB	ENTERING DRY BULB
EDH	ELECTRIC DUCT HEATER
EF	EXHAUST FAN
EG	EXHAUST GRILLE
EL	ELEVATION
ELEC	ELECTRICITY/ELECTRICAL
EQUIP	EQUIPMENT
ER	EXHAUST REGISTER
EWB	ENTERING WET BULB
EWH	ELECTRIC WATER HEATER
EWT	ENTERING WATER TEMPERATURE
EXH	EXHAUST
EXT	EXTERNAL/EXTERIOR
FCO	FLOOR CLEAN OUT
FCU	FAN COIL UNIT
FCV	FLOW CONTROL VALVE
FD	FLOOR DRAIN/FIRE DAMPER
FIN	FINISHED
FL	FLOOR
FS	FLOOR SINK
FSD	COMBINATION FIRE/SMOKE DAMPER
GA	GAUGE
HB	HOSE BIBB
HC	HEATING COIL
HORIZ	HORIZONTAL
HP	HORSEPOWER
HR	HOUR
HVAC	HEATING, VENTILATING & AIR CONDITIONING
HZ	HERTZ
ID	INSIDE DIAMETER
IH	INTAKE HOOD
IS	INERTIAL SEPARATOR
INV.EL.	INVERT ELEVATION
KG	KILOGRAM
KH	KITCHEN HOOD
KW	KILOWATT
KPa	KILO PASCALS
LAT	LEAVING AIR TEMPERATURE
LAV	LAVATORY
LFACP	LOCAL FIRE ALARM CONTROL PANEL
LPM	LITERS PER MINUTE
LPH	LITERS PER HOUR
LS	LEVEL SWITCH
LVG	LEAVING
LVR	LOUVER
M	METER
M^2	SQUARE METER
M^3	CUBIC METER
MAX	MAXIMUM
MECH	MECHANICAL
MIN	MINIMUM
MISC	MISCELLANEOUS
MM	MILLIMETER
MVD	MANUAL VOLUME DAMPER
NC	NORMALLY CLOSED
NFPA	NATIONAL FIRE PROTECTION ASSOCIATION
NO	NORMALLY OPEN/NUMBER
NOM	NOMINAL
NTS	NOT TO SCALE
OA	OUTSIDE AIR
OC	ON CENTER
OD	OVERFLOW DRAIN
OI	OIL INTERCEPTOR
ϕ	PHASE
P	PUMP
PD	PRESSURE DIFFERENTIAL
PRESS	PRESSURE
PRV	PRESSURE REDUCING VALVE
PS	PRESSURE SWITCH
QTY	QUANTITY
R	RISE
RA	RETURN AIR
RC	REFRIGERATION COOLER
RD	ROOF DRAIN
REQD	REQUIRED
RF	RETURN FAN
RG	RETURN GRILLE
RH	RELATIVE HUMIDITY
RL	REFRIGERANT LIQUID
RM	ROOM
RPM	REVOLUTIONS PER MINUTE
RR	RETURN REGISTER
RS	REFRIGERANT SUCTION
S	SOIL/SOUTH/SECOND
SA	SUPPLY AIR
SD	SUPPLY AIR DIFFUSER
SENS	SENSIBLE
SF	SUPPLY FAN
SG	SUPPLY GRILLE
SH	SHEET
SMACNA	SHEET METAL AND AIR CONDITIONING CONTRACTORS NATIONAL ASSOCIATION
SOV	SHUT-OFF VALVE
SP	STATIC PRESSURE
SQ FT	SQUARE FOOT/SQUARE FEET
SR	SUPPLY REGISTER
SST	SATURATED SUCTION TEMPERATURE
TCP	TEMPERATURE CONTROL PANEL
TCV	TEMPERATURE CONTROL VALVE
TEMP	TEMPERATURE
TG	TRANSFER GRILLE
TK	TANK
TP	TRAP PRIMER
TYP	TYPICAL
UC	UNDERCUT DOOR
UL	UNDERWRITER'S LABORATORIES
V	VOLTS
VEL	VELOCITY
VH	VENT HOOD
WCCU	WATER COOLED CONDENSING UNIT
WG	WATER GAGE

GENERAL NOTES:

1. SEE ARCHITECTURAL DRAWINGS FOR EXACT LOCATION OF LOUVERS, EQUIPMENT PADS AND SUPPORT PLATFORMS.
2. SEE ARCHITECTURAL REFLECTED CEILING PLAN FOR EXACT LOCATION OF DIFFUSERS, REGISTERS, AND GRIILLES.
3. INSULATE DUCTWORK AND REFRIGERANT PIPING SYSTEMS IN ACCORDANCE WITH SPEC. SECTION 01015, THERMAL INSULATION FOR MECHANICAL SYSTEMS.
4. ALL DIMENSIONS SHOWN IN mm UNLESS INDICATED OTHERWISE.
5. ALL DUCT DIMENSIONS SHOWN ON THE DRAWINGS ARE CLEAR INSIDE DIMENSIONS.
6. MOUNT WALL THERMOSTATS 1.5M ABOVE FINISHED FLOOR.
7. OUTDOOR CONDENSING UNITS SHALL BE INSTALLED ON 300 HIGH STEEL PLATFORM ON A CONCRETE PAD AND PROVIDED WITH VIBRATION PADS.

CONTROL LEGEND

SYMBOL	DESCRIPTION
M	MOTORIZED CONTROL DAMPER
	CONTROL CONNECTION
S/S	START/STOP CONTROL
H	HUMIDISTAT, TWO POSITION
Hm	HUMIDISTAT, MODULATING
H	HUMIDITY SENSOR
SD	SMOKE DETECTOR
T_2	THERMOSTAT, TWO POSITION
T	SPACE THERMOSTAT
FS	FLOW SWITCH
TI	TEMPERATURE INDICATOR
T_S	SPACE TEMPERATURE SENSOR

EQUIPMENT DESIGNATION

EH	ELECTRICAL CABINET HEATER
PH	PROPANE SPACE HEATER
CF	CEILING FAN
OWF	OSOLATING WALL FAN
UH	UNIT HEATER
AC	AIR CONDITIONING UNIT
CU	CONDENSING UNIT
EF	EXHAUST FAN

SYMBOL	DESCRIPTION	DATE	APP

DESIGNED BY: RMS
DWN BY: RMS
CHK BY: SE
DATE: 19 January 2009
SUBMITTED BY:
FILE NO.: AF0701 ♦-MH01GN

US Army Corps of Engineers
Transatlantic Programs Center

AFGHAN NATIONAL POLICE
UP DISTRICT HEADQUARTERS
(2 STORY)
AFGHANISTAN
STANDARD DETAILS

LEGENDS AND ABBREVIATIONS

SHEET REFERENCE NUMBER:
SM-1

$DATE$
$FILE$

SPLIT SYSTEM SCHEDULE

CU A–X | AC A–X

EQUIPT. NO.	LOCATION	CAPACITY COOL/HEAT	SEER	AIR QUNTITY CMH	ELECTRICAL DATA				CONTROL DIAGRAM	COP	REMARKS
					W	VOLTS	PH	HZ			
AC–A–1, AC–A–3	DY. CHIEF OFFICE	2.3/2.5KW	10	474	750	220	1	50	SEE SPEC.	2.9	HIGH WALL MOUNTED. PROVISION FOR FRESH AIR THROUGH MOVABLE LOUVERS.
AC–A–2, AC–A–4	CHIEF OFFICE	2.6/3.0KW	10	474	900	220	1	50	SEE SPEC.	2.9	HIGH WALL MOUNTED. PROVISION FOR FRESH AIR THROUGH MOVABLE LOUVERS.

EXHAUST FAN SCHEDULE

EF A–X

EQUIPT. NO.	LOCATION	AIR QUANTITY CMH	S.P. MM–W.G.	FAN TYPE	ELECTRICAL DATA				CONTROL DIAGRAM	SOUND POWER dWA	REMARKS
					HP	VOLTS	PH	HZ			
EF–A–1, 3, & 7	TOILET ROOMS	170	7	CEILING CABINET	80 WATTS	220	1	50	E1	50	CEILING MOUNTED WITH GRAVITY BACKDRAFT DAMPER AND CEILING GRILE
EF–A–2	MEN'S TOILET	170	7	CEILING CABINET	80 WATTS	220	1	50	E3	50	CEILING MOUNTED WITH GRAVITY BACKDRAFT DAMPER AND CEILING GRILE
EF–A–4, 5, 8, & 9	MEN'S TOILET	510	7	WALL CENTRIFUGAL	1/12	220	1	50	E2	50	WALL MOUNTED WITH BACKDRAFT DAMPER
EF–A–6	WOMEN'S TOILET	400	7	WALL CENTRIFUGAL	1/12	220	1	50	E2	50	WALL MOUNTED WITH BACKDRAFT DAMPER
EF–A–10	UTILITY STORAGE	400	7	WALL CENTRIFUGAL	1/12	220	1	50	E4	50	WALL MOUNTED WITH BACKDRAFT DAMPER
EF–A–11	KITCHEN	3,300	14	WALL CENTRIFUGAL	3/4	220	1	50	E3	65	RATED FOR 175° C AND KITCHEN HOOD
EF–A–12	KITCHEN	1,700	8	WALL CENTRIFUGAL	1/4	220	1	50	E4	60	WALL MOUNTED WITH BACKDRAFT DAMPER
EF–H–1	WELL HOUSE	600	10	WALL CENTRIFUGAL	1/4	220	1	50	E4	65	WALL MOUNTED WITH BACKDRAFT DAMPER
EF–I–1	PUMP ROOM	1,275	10	WALL CENTRIFUGAL	1/4	220	1	50	E4	60	WALL MOUNTED WITH BACKDRAFT DAMPER

ELECTRIC CABINET/UNIT HEATER SCHEDULE

EH X–X | UH X–X

EQUIPT. NO.	LOCATION (1)	DISCHARGE	CAPACITY (KW)	AIR FLOW (CMH)	ELECTRICAL DATA				TEMP. RISE DEG C	SOUND POWER dBA	REMARKS
					HP	VOLTS	PH	HZ			
EH–A–1	TOILETS	HORIZONTAL	0.75	68	1/70	220	1	50	30		WALL MOUNTED CABINET HEATER
EH–A–2	TOILET	VERTICAL	1.5	270	1/70	220	1	50	19		CEILING MOUNTED CABINET HEATER
UH–A–3	TOILETS/ SHOWERS	HORIZONTAL	3.0	510	1/20	220	1	50	17		WALL MOUNTED UNIT HEATER SEE DETAIL C ON SHT. SM3.
UH–D–1	GUARD HOUSE	HORIZONTAL	4	425	1/30	220	1	50	10		FLOOR MOUNTED CABINET HEATER
UH–E–1	GUARD TOWER	HORIZONTAL	4	425	1/20	220	1	50	10		FLOOR MOUNTED CABINET HEATER
UH–F–1	GUARD SHACK	HORIZONTAL	4	425	1/30	220	1	50	10		FLOOR MOUNTED CABINET HEATER
UH–H–1	WELL HOUSE	HORIZONTAL	3.0	510	1/20	220	1	50	17		WALL MOUNTED UNIT HEATER SEE DETAIL C ON SHT. SM3.
UH–I–1	PUMP ROOM	HORIZONTAL	4.0	600	1/20	220	1	50	20		WALL MOUNTED UNIT HEATER SEE DETAIL C ON SHT. SM3.

(1) SEE PLANS FOR LOCATION AND QUANTITY.

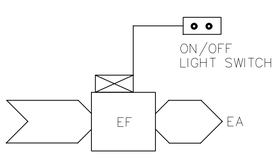

TEMPERATURE CONTROL DIAGRAM E1

E1 SEQUENCE OF CONTROL

START–UP

THE EXHAUST FAN SHALL BE STARTED MANUALLY FROM A LOCAL START/STOP LIGHT SWITCH.

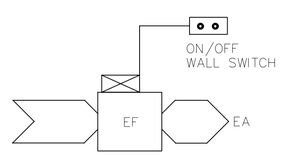

TEMPERATURE CONTROL DIAGRAM E2

E2 SEQUENCE OF CONTROL

START–UP

THE EXHAUST FAN SHALL BE STARTED MANUALLY FROM A LOCAL START/STOP LIGHT SWITCH.

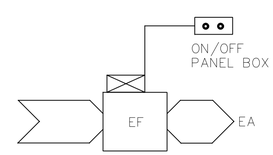

TEMPERATURE CONTROL DIAGRAM E3

E3 SEQUENCE OF CONTROL

START–UP

THE EXHAUST FAN SHALL BE STARTED MANUALLY FROM AN THE ON–OFF SWITCH IN THE PANEL BOX.

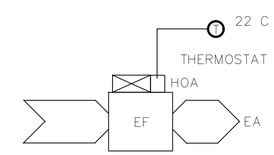

TEMPERATURE CONTROL DIAGRAM E4

E4 SEQUENCE OF CONTROL

START–UP

THE EXHAUST FAN SHALL BE STARTED MANUALLY BY PLACING THE HAND–OFF–AUTO (HOA) SWITCH IN THE HAND POSITION. IN THE AUTO POSITION, FAN OPERATION SHALL BE CONTROLLED OFF AN ADJUSTABLE THERMOSTAT.

SYMBOL	DESCRIPTION	DATE	APP

DESIGNED BY: RMS
DATE: 19 January 2009
DWN BY: RMS
SUBMITTED BY:
CHK BY: SE
FILE NO.: AF0701 ♦–MH02SC

US Army Corps of Engineers
Transatlantic Programs Center

AFGHAN NATIONAL POLICE
UP DISTRICT HEADQUARTERS
(2 STORY)
AFGHANISTAN
STANDARD DETAILS

MECHANICAL SCHEDULES

SHEET REFERENCE NUMBER:
SM–2

$DATE$
$FILE$

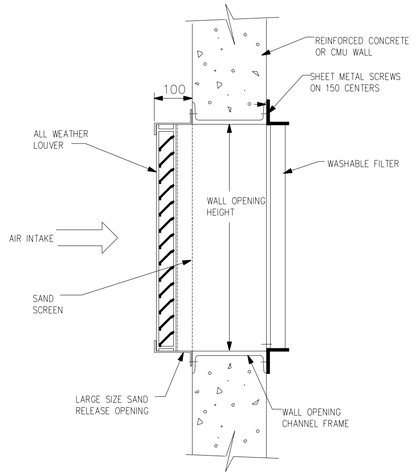

SAND TRAP TYPE LOUVER (A / SM3)

NOT TO SCALE

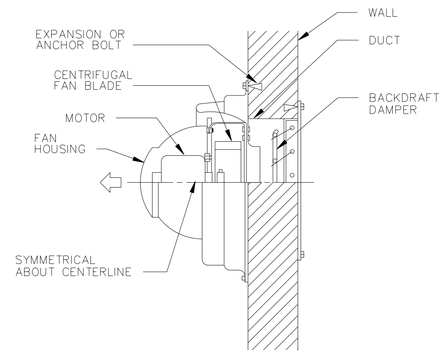

POWER WALL VENTILATOR DETAIL (B / SM3)

NOT TO SCALE

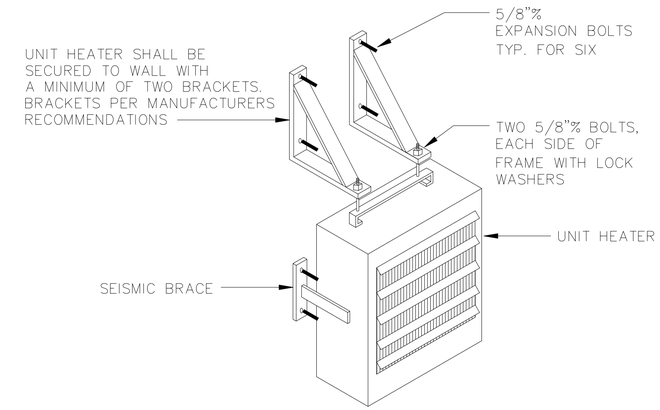

ELECTRIC UNIT HEATER DETAIL (C / SM3)

NOT TO SCALE

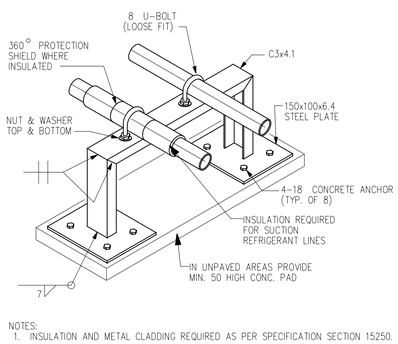

NOTES:
1. INSULATION AND METAL CLADDING REQUIRED AS PER SPECIFICATION SECTION 15250.

REFRIGERANT PIPING SUPPORT DETAIL (D / SM3)

NOT TO SCALE

(SIMILAR FOR CHILLED WATER AND OTHER PIPING SYSTEMS)

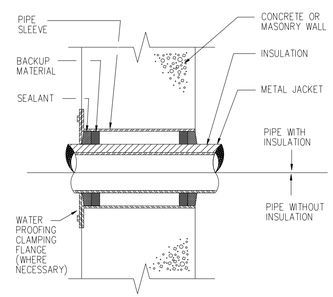

PIPE SLEEVE THRU WALL (E / SM3)

NOT TO SCALE

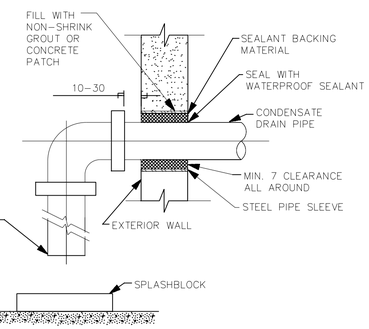

CONDENSATE DRAIN THRU EXTERIOR WALL (F / SM3)

NOT TO SCALE

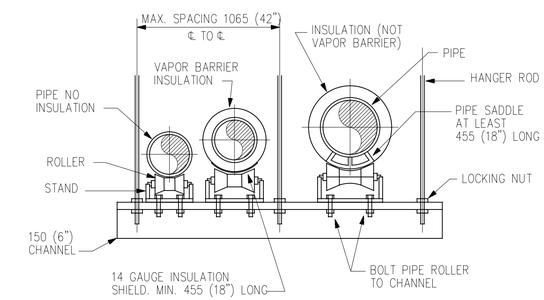

TRAPEZE HANGER DETAIL (G / SM3)

NOT TO SCALE

SYMBOL	DESCRIPTION	DATE	APP

DESIGNED BY: RMS
DWN BY: RMS
CHK BY: SE
DATE: 19 January 2009
SUBMITTED BY:
FILE NO.: AF0701 & MH03DT

US Army Corps of Engineers
Transatlantic Programs Center

AFGHAN NATIONAL POLICE
UP DISTRICT HEADQUARTERS
(2 STORY)
AFGHANISTAN
STANDARD DETAILS

MECHANICAL STANDARD DETAILS

SHEET REFERENCE NUMBER:
SM-3

$DATE$
$FILE$

LEGEND

- GATE VALVE
- GLOBE VALVE
- BUTTERFLY VALVE
- CHECK VALVE
- STOP CHECK VALVE
- PLUG VALVE
- 3-WAY VALVE
- RELIEF OR SAFETY VALVE
- ANGLE VALVE
- ANGLE GLOBE VALVE
- BALANCING COCK
- AIR VALVE
- HOSE GATE DRAIN VALVE
- EXPANSION VALVE
- AAV — AIR VENT, AUTOMATIC
- AIR VENT, MANUAL
- M — MOTORIZED VALVE (MODULATING OR TWO POSITION)
- SOLENOID VALVE
- M — 3-WAY MOTORIZED VALVE (MOD. OR 3-POSITION)
- S — 3-WAY SOLENOID VALVE
- TEMPERATURE REGULATING VALVE
- AIR ELIMINATOR
- BACK PRESSURE VALVE
- PRESSURE REDUCING VALVE
- D.V. — DRAIN VALVE
- SLEEVE COUPLING (SC)
- BP — BACKFLOW PREVENTER
- WHA 'A' — WATER HAMMER ARRESTOR

LEGEND

- P — PRESSURE GAUGE
- T — THERMOMETER, DIAL TYPE
- T — THERMOMETER, VERTICAL TYPE
- H.B. — HOSE BIBB, PLAN
- H.B. — HOSE BIBB, ELEV.
- W.H. — WALL HYDRANT
- CO — EXPOSED CLEANOUT
- FCO — FLOOR CLEANOUT
- WCO — WALL CLEANOUT
- BALL VALVE
- UNION
- FLANGE SET
- FLEXIBLE HOSE/CONNECTION
- Y-TYPE STRAINER
- SIGHT GLASS
- GAUGE GLASS W/COCKS
- FILTER / DRYER
- TANK AIR CONTROL FITTING
- CAPPED / PLUGGED CONNECTION
- REDUCER - INCREASER
- EXPANSION LOOP
- EXPANSION JOINT
- SUPPORT LOCATION
- PIPE TURNING DOWN
- PIPE TURNING UP
- FD — FLOOR DRAIN
- ROOF DRAIN
- POINT OF CONNECTION TO EXISTING SYSTEM

LEGEND

- A — COMPRESSED AIR DROP
- HU — HUMIDIFIER
- I.F. — INSULATING FLANGE
- THERMAL RELIEF VALVE W/ SIGHT FLOW INDICATOR
- S — BASKET STRAINER
- W — WATER METER
- FS — FLOW CONTROL VALVE
- SAMPLE CONNECTION
- FIRE SAFETY VALVE
- NON - SURGE CHECK VALVE
- FLOW CONTROL VALVE
- P — PRESSURE REGULATING VALVE
- W — WATER SLUG VALVE (WSV)

ABBREVIATIONS

A A	AMERICAN DISABILITIES ACT
CO	EXPOSED CLEAN OUT
CW	COLD WATER
EWH	ELECTRIC WATER HEATER
FCO	FLOOR CLEAN OUT
FD	FLOOR DRAIN
FFE	FINISHED FLOOR ELEVATION
FS	FLOOR SINK
GWH	GAS WATER HEATER
HB	HOSE BIBB
HW	HOT WATER
HWR	HOT WATER CIRCULATION
N.C.	NORMALLY CLOSED
P	PUMP
S.R.	SHORT RADIUS
S.S.	STAINLESS STEEL
V	VENT
VTR	VENT THROUGH ROOF
W	WASTE
WCO	WALL CLEAN OUT
WH	WALL HYDRANT

- SOIL OR WASTE PIPE ABOVE FLOOR
- SOIL OR WASTE PIPE BELOW FLOOR (MIN. 50 SIZE)
- COLD WATER, DOMESTIC (PLAN)
- HOT WATER, DOMESTIC (PLAN)
- HOT WATER, CIRCULATION, DOMESTIC (PLAN)
- VENT PIPE
- C — CONDENSATE DRAIN
- CA — COMPRESSED AIR
- HPIW — HIGH PRESSURE INDUSTRIAL WATER
- IW — INDUSTRIAL WATER

EQUIPMENT DESIGNATION

EF — EQUIPMENT TYPE
A-1 — EQUIPMENT NUMBER
BUILDING NUMBER

DETAIL REFERENCE

X — REFERENCE DESIGNATION LETTER
X — DETAIL SHEET LOCATION

PLUMBING FIXTURE SCHEDULE

FIX. NO.	SYMBOL	FIXTURE NAME	C.W.	H.W.	WASTE (W)	VENT (V)	REMARKS
P1		EASTERN WATER CLOSET (FLUSH TANK)	15	--	100	50	CW CONNECTION SHALL BE 25 UNLESS NOTED OTHERWISE. FLOOR OUTLET
P2		WESTERN WATER CLOSET (FLUSH TANK)	15	--	100	50	
P3		LAVATORY	15	15	32	32	
P3A		LAVATORY (2 STATION GANG)	15	15	32	32	
P4		MOP SINK (FLOOR MOUNT JANITOR TYPE)	15	15	50	40	DRAIN ON FLOOR OR AS INDICATED
P5		SHOWER	15	15	40	32	
P6		NOT USED					
P7		NOT USED					
P8		NOT USED					
P9		KITCHEN SINK	15	15	40	32	
P10		GREASE INTERCEPTOR			80	50	MANUAL CLEANING TYPE, WITH 135 LPM FLOW RATE
FD		FLOOR DRAIN			VARIES		SEE FLOOR PLAN FOR SIZE
FS		FLOOR SINK			80		SEE FLOOR PLAN FOR SIZE

FACILITY DESIGNATION

A	**HEADQUARTERS**
B	**FUTURE BUILDING**
C	**FUTURE BUILDING**
D	**GUARD HOUSE ***
E	**GUARD TOWER ***
F	**GUARD SHACK ***
H	**WELL HOUSE BUILDING ***
I	**BOOSTER PUMP BUILDING**

*** NO PLUMBING WORK IN THESE FACILITIES**

WATER HAMMER ARRESTOR SIZING CHART

P.D.I. SYMBOL	FIXTURE UNIT RATING	NIPPLE SIZE (MM)	CHAMBER HEIGHT (MM)
A	1-11	20	100
B	12-32	25	125
C	33-60	25	150
D	61-113	25	175
E	114-154	25	200
F	155-330	25	225

P. D. I. = PLUMBING AND DRAINAGE INSTITUTE.

GENERAL NOTES:

1. DRAINAGE PIPING LOCATED BELOW FLOORS SHALL BE ROUTED BELOW FOOTINGS UNLESS INDICATED OTHERWISE.
2. INTERIOR SOIL AND WASTE PIPING 80mm AND SMALLER SHALL BE ROUTED WITH A 2% SLOPE. INTERIOR SOIL AND WASTE PIPING 100mm AND LARGER SHALL BE ROUTED WITH A MINIMUM 1% SLOPE.
3. ALL DIMENSIONS SHOWN HERE AND ON PLANS ARE IN MM UNLESS INDICATED OTHERWISE.
4. MINIMUM BURIED PIPE SIZE SHALL BE 50 mm.
5. SEE STANDARD SHEET SM-1 FOR ADDITIONAL ABBREVIATIONS.
6. FOR FOOD SERVICE EQUIPMENT DESCRIPTION, SEE ARCHITECTURAL DRAWINGS.

SYMBOL	DESCRIPTION	DATE	APP

DESIGNED BY: RMS
DATE: 19 January 2009
DWN BY: RMS
SUBMITTED BY:
CHK BY: SE
FILE NO.: AF0701 ♦-MP01GN

US Army Corps of Engineers
Transatlantic Programs Center

AFGHAN NATIONAL POLICE UP DISTRICT HEADQUARTERS (2 STORY)
AFGHANISTAN
STANDARD DETAILS

LEGEND AND ABBREVIATIONS

SHEET REFERENCE NUMBER:
SP-1

$DATE$
$FILE$

NOTES:
1. PIPING SHALL BE PLASTIC PVC TO MATCH WATER DISTRIBUTION SYSTEM.
2. CONTRACTOR SHALL INSTALL DIELECTRIC UNION BETWEEN CONNECTIONS OF DISSIMILAR METALS.

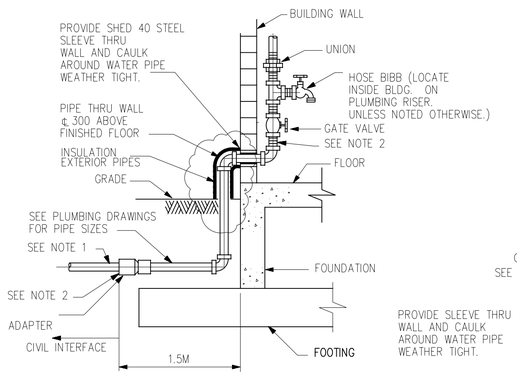

WATER SERVICE ENTRANCE SIDE VIEW

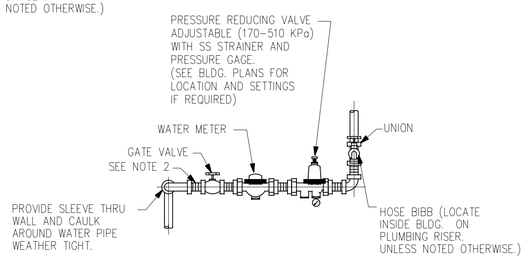

WATER SERVICE ENTRANCE FRONT VIEW

WATER SERVICE ENTRANCE DETAILS (A / SP2)
NOT TO SCALE

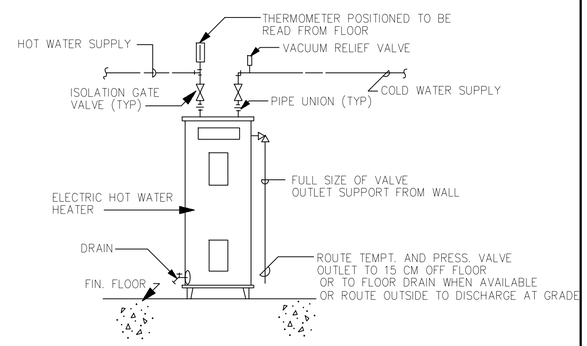

ELECTRIC WATER HEATER DETAIL (B / SP2)
NOT TO SCALE

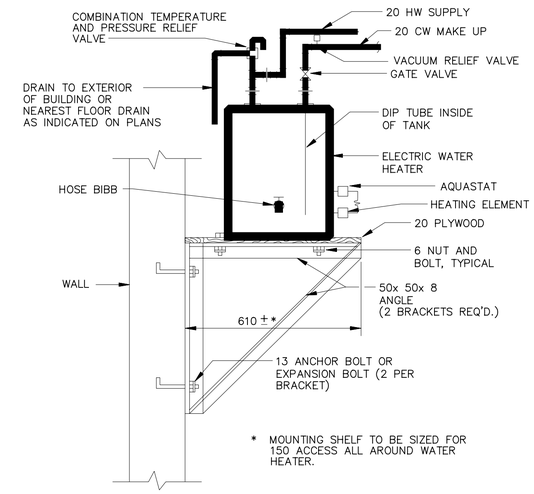

IF WATER HEATER COMES EQUIPPED WITH A MOUNTING BRACKET, CONTRACTOR WILL SUBMIT TO THE ENGINEER FOR APPROVAL, ALTERNATE INSTALLATION DETAIL AS RECOMMENDED BY HEATER MANUFACTURER FOR THE TYPE OF WALL (CMU,METAL STUD, ETC.) APPLICABLE

WALL MOUNTED ELECTRIC WATER HEATER DETAIL (C / SP2)
NOT TO SCALE

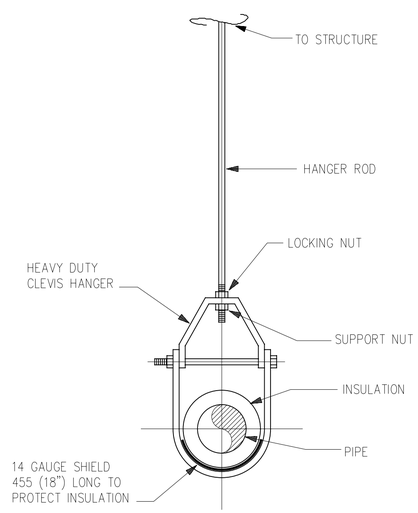

CLEVIS HANGER DETAIL (D / SP2)
NOT TO SCALE

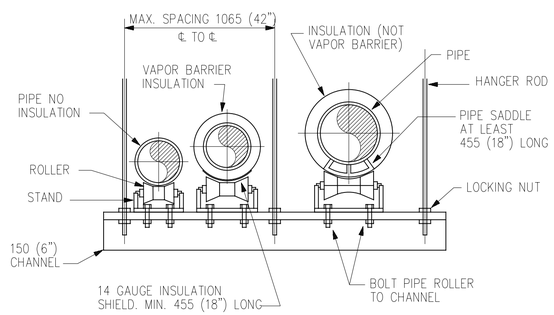

TRAPEZE HANGER DETAIL (E / SP2)
NOT TO SCALE

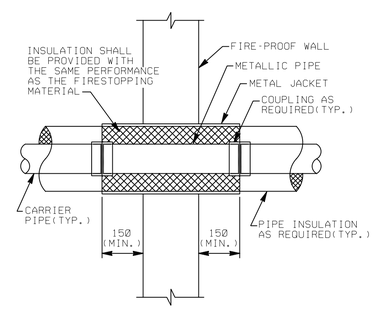

TYPICAL FIRE-PROOF, FRAMED WALL PENETRATION DETAIL (F / SP2)
NOT TO SCALE

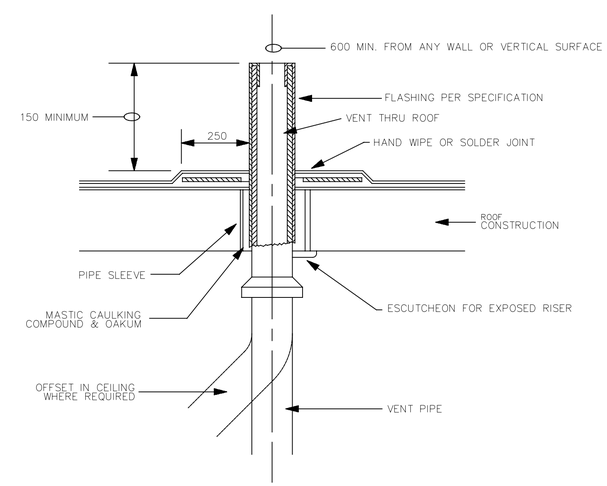

VENT THRU ROOF DETAIL (G / SP2)
NOT TO SCALE

REVISIONS			
*	SYMBOL	DESCRIPTION	DATE	APP
			19/03/2007	

DESIGNED BY: RMS
DATE: 19 January 2009
DWN BY: RMS
SUBMITTED BY:
CHK BY: SE
FILE NO.: AF0701 ♦-MP02DT

US Army Corps of Engineers
Transatlantic Programs Center

AFGHAN NATIONAL POLICE
UP DISTRICT HEADQUARTERS
(2 STORY)
STANDARD DETAILS
AFGHANISTAN

STANDARD PLUMBING DETAILS

SHEET REFERENCE NUMBER:
SP-2

$DATE$
$FILE$

LEGEND

- FLUORESCENT LIGHT FIXTURE,
- LIGHT FIXTURES, FIXTURE MARK AS INDICATED
- EXIT SIGN, TYPE F FIXTURE, MTD 2.2M AFF
- EMERGENCY LIGHT, TYPE C FIXTURE, MTD 2.4M AFF
- WP,S — DUPLEX SOCKET OUTLET (13A, 250V), BS 1363
  S – A/C OR WATER HEATER SWITCH–RECEPTACLE COMBINATION
  WP – WEATHERPROOF
- J — JUNCTION BOX
- $S_{3,WP}$ — SWITCH, WP–WEATHERPROOF, 3–3 WAY, EP–EXPLOSION PROOF
- S — LIGHT SWITCH
- S_F — EXHAUST FAN SWITCH
- S_{CF} — CEILING FAN SWITCH
- 20 — SAFETY DISCONNECT SWITCH, SWITCH SHALL BE 1P56 ENCLOSURE, 20A UNO
- 1/3 — MOTOR (1/3 HP)
- S_M — MANUAL MOTOR STARTER
- ELECTRIC UNIT HEATER
- EWH — ELECTRIC WATER HEATER
- LP–2 — HOMERUN, PNL LP, CIRCUIT 2
- LP–2 — HOMERUN, PNL LP, 3PH CKT, CIRCUIT 2
- COMBINATION LIGHTING AND POWER PANEL (LP), OR LOAD CENTER (LC)
- 400AT / 600AF — 3 POLE, 600A ADJUSTABLE TRIP CIRCUIT BREAKER
- 150AT / 3P — 3 POLE, 150A CIRCUIT BREAKER
- COMBINATION TELEPHONE/DATA OUTLET. SEE DETAIL SHEET SE–5 MOUNTED 0.5M AFF
- W — SINGLE TELEPHONE ONLY OUTLET, WALL MOUNTED 1.2m AFF
- TBB — TELEPHONE BACK BOARD (TVBB INDICATES TELEVISION BACKBOARD) (1200mmx600mmx12mm) UNLESS NOTED OTHERWISE
- WALL MOUNTED CLOSED CIRCUIT TELEVISION (CCTV) CAMERA, FIXED TYPE UNLESS PAN–TILT–ZOOM (PTZ) IS INDICATED, MH 2.4M AFF UNO
- EXOTHERMIC WELDED GROUND CONNECTION
- GROUND ROD (EARTH ELECTRODE) WITH EXOTHERMIC WELD CONNECTION, COPPER, 20mm DIA X 3.0m LENGTH
- EM 1 — ELECTRIC POWER MANHOLE, H INDICATES HANDHOLE.
- CM 1 — COMMUNICATIONS MANHOLE, H INDICATES HANDHOLE.
- SE — UNDERGROUND SECONDARY DISTRIBUTION POWER LINE, DIRECT BURIED IN SCHEDULE 40 PVC C, UNO
- UNDERGROUND DIRECT BURIED SCH 40 PVC C, AS INDICATED, 600 BFG, UNO

GENERAL NOTES:

1. REFER TO SECTION 01015 FOR ADDITIONAL / DETAIL REQUIREMENTS.
2. ALL WIRING INSTALLATION FOR LIGHTING, POWER, TELECOMMUNICATIONS, AND CCTV SHALL BE IN APPROVED METAL CONDUIT, EITHER CONCEALED OR SURFACE MTD.
3. EXIT AND EMERGENCY LIGHTING FIXTURES SHALL BE CONNECTED TO AN UN SWITCHED POWER CIRCUIT.
4. MOUNTING HEIGHT FOR ALL PENDANT MTD LIGHT FIXTURE IS 3M AFF UNO ON THE DRAWINGS OR IN THE LIGHT FIXTURE SCH.
5. MOUNT ALL LIGHT AND FAN SWITCHES 1.2M AFF UNO.
6. MOUNT ALL RECEPTACLES 500 AFF UNO. MOUNT ALL COUNTER TOP RECEPTACLES 100 ABOVE COUNTER TOP, AND PROVIDE GFI PROTECTION.
7. ALL SPARE OR EMPTY CONDUITS SHALL HAVE A PULL STRING SECURED AT BOTH ENDS OF CONDUIT.
8. ALL ELECTRICAL SYSTEMS SHALL BE INSTALLED IN ACCORDANCE WITH THE MANUFACTURERS RECOMMENDATIONS AND THE NEC.
9. BOND LIGHTNING PROTECTIONGROUND SYSTEMS TO BUILDING ELECTRICAL GROUND SYSTEM PER NEC 250.16

LIGHTING FIXTURE SCHEDULE

* SEE LIGHTING FIXTURE DETAILS ON DRAWINGS SE–2 & SE–3

FIXTURE MARK	LINE VOLT.	TYPE	LAMPS NO.	LAMPS WATTAGE	MOUNTING	REMARKS
A	240	230B1	3	40	SURFACE/PENDANT	INDUSTRIAL FLUORESCENT, WITH ELECTRONIC BALLAST
A1	240	230A1	2	40	SURFACE/PENDANT	INDUSTRIAL FLUORESCENT, WITH ELECTRONIC BALLAST
B	240	232	2	40	SURFACE/PENDANT	VAPORTIGHT FLUORESCENT
C	240	603	–	–	SURFACE	EMERGENCY BATTERY PACK, MTD 2.4M AFF
D	240	PH8	1	250	PENDANT	METAL HALIDE LOW BAY INDUSTRIAL
E	240	–	1	1000	ROOF	SPOT LIGHT
F	240	XF2	1	8	SURFACE/PENDANT	EXIT LIGHT MTD 2.2M AFF
G	240	502B	1	70	SURFACE	HID EXTERIOR WALLL LIGHT
H	240	SF–11	1	100	SURFACE	VAPOR PROOF PROTECTED INCANDESCENT WITH CLEAR, RED, BLUE, OR BLACK GLOBE AS INDICATED ON THE DRAWINGS

ABBREVIATIONS

AFG	ABOVE FINISHED GRADE
AFF	ABOVE FINISHED FLOOR
AF	AMP FRAME
AT	AMP TRIP
ACCU	AIR COOLED CONDENSING UNIT
A	AMPERE
AHU	AIR HANDLING UNIT
AIC	AMPERE INTERRUPTING CAPACITY
BFG	BELOW FINISHED GRADE
CH	COMMUNICATIONS HANDHOLE
CKT	CIRCUIT
CM	COMMUNICATIONS MANHOLE
CND	CONDUCTOR(S)
C	CONDUIT
COR	CONTRACTING OFFICERS REPRESENTATIVE
EF	EXHAUST FAN
EH	ELECTRIC POWER HANDHOLE
EM	ELECTRIC POWER MANHOLE
EP	EXPLOSION PROOF
ELCB	EARTH LEAKAGE CIRCUIT BREAKER
FACP	FIRE ALARM CONTROL PANEL
GFI	GROUND FAULT INTERRUPTING
GFCI	GOVERNMENT FURNISHED CONTRACTOR INSTALLED
HP	HORSEPOWER
HPS	HIGH PRESSURE SODIUM
HZ	HERTZ
KV	KILOVOLT
KW	KILOWATT
KVA	KILOVOLT–AMPERE
M	METERS
MBB	METERING BACK BOARD
MDF	MAIN DISTRIBUTION FRAME
MEW	HOST NATION MINISTRY OF ELECTRICITY AND WATER
MTD	MOUNTED
NEC	NATIONAL ELECTRICAL CODE
NFPA	NATIONAL FIRE PROTECTION ASSOCIATION
NIC	NOT IN CONTRACT
PH, Ø	PHASE
P	POLE
XXX	HOST NATION ARMED FORCES
TEL	TEL CO.
RM	ROOM
SCH	SCHEDULE
SN	SOLID NEUTRAL
TBB	TELEPHONE TERMINAL BACKBOARD
TCB	TELEPHONE CONNECTION BOX (BY TEL CO)
TYP.	TYPICAL
UNO	UNLESS NOTED OTHERWISE
V	VOLT
W	WIRE
WP	WEATHERPROOF
XFMR,T	TRANSFORMER

EQUIVALENT CONDUIT SIZE

mm	INCHES
20	3/4
25	1
32	1 1/4
38	1 1/2
50	2
60	2 1/2
80	3
90	3 1/2
100	4

METRIC COPPER CONDUCTOR CONVERSION CHART

AWG KCMIL	COMPUTED CONVERSION mm 2	ADVISED CROSS SECTION mm 2
16	1.31	1.5
14	2.08	2.5
12	3.31	4
10	5.27	6
8	8.4	10
6	13.3	16
4	21.2	25
3	26.7	25
2	33.6	35
1	42.4	50
1/0	53.4	50
2/0	67.5	70
3/0	85.0	95
4/0	107.2	120
250	126.7	120
300	152.0	150
350	177.4	185
400	202.7	240
500	253.4	300

UNLESS OTHERWISE NOTED, LINEAR DIMENSIONS SHOWN ARE IN MILLIMETERS.

SYMBOL	DESCRIPTION	DATE	APP
1	ELEVATION	19/03/2007	

DESIGNED BY: MM
DWN BY: MM
CHK BY: SE
DATE: 19 January 2009
SUBMITTED BY:
FILE NO.: AF0701 ♦–EL01GN

US Army Corps of Engineers
Transatlantic Programs Center

AFGHAN NATIONAL POLICE
UP DISTRICT HEADQUARTERS
(2 STORY)
AFGHANISTAN
STANDARD DETAILS
LEGEND & ABBREVATIONS

SHEET REFERENCE NUMBER:
SE–1

$DATE$
$FILE$

FIXTURE MARK A

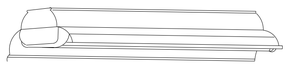

TYPE 230

SUSPENSION MOUNTED, INDUSTRIAL,
OPEN TYPE FLUORESCENT FIXTURE, 4-FOOT

FIRST SUFFIX	SECOND-SUFFIX	DESCRIPTION
A		TWO LAMPS
B		THREE LAMPS
C		FOUR LAMPS
	1	8 TO 15 PERCENT UPLIGHT
	2	18 TO 25 PERCENT UPLIGHT

FIXTURE SHALL CONFORM TO UL1570. STANDARD BALLAST(S) SHALL BE THE CLASS P, HIGH POWER FACTOR TYPE APPROVED FOR THE APPLICATION BY THE CERTIFIED BALLAST MANUFACTURERS. CHANNEL HOUSING, END FITTINGS, AND REFLECTOR SHALL BE CONSTRUCTED WITH DIE-FORMED, COLD-ROLLED STEEL. REFLECTOR FINISH SHALL BE PORCELIAN ENAMEL, BAKED WHITE ENAMEL OR ALUMINUM OXIDE. SOCKETS SHALL BE OF THE TYPE REQUIRING A FORCED MOVEMENT ALONG THE LONGITUDINAL AXIS OF THE LAMP FOR INSERTION AND REMOVAL OF THE LAMP. FIXTURE SHALL BE PREWIRED. FLUORESCENT TUBES SHALL BE PROTECTED BY A VIRGIN ACRYLIC PROTECTIVE SLEEVE AND CLEAR PLASTIC VENTED END CAPS.

FIXTURE MARK B

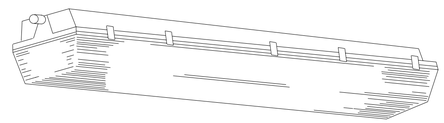

TYPE 232

4-FOOT FIXTURE LENGTH

ENCLOSED AND GASKETED, VAPOR-TIGHT FLUORESCENT FIXTURE
FOR SURFACE OR PENDANT MOUNTING

FIXTURE SHALL CONFORM TO UL1570 AND SHALL BE VAPOR-TIGHT AND SUITABLE FOR USE IN WET LOCATIONS. FIXTURE SHALL HAVE ONE-PIECE HOUSINGOF MOLDED HIGH-IMPACT PLASTIC OR REINFORCED FIBERGLASS. HOUSING BODY SHALL HAVE AN INTERNAL, DIE-FORMED, COLD-ROLLED STEEL CHANNEL WITH COVER TO PROVIDE FIXTURE RIGIDITY AND TO CONTAIN ELECTRIC COMPONENTS. THE METAL CHANNEL AND COVER SHALL RECEIVE A RUST INHIBITIVE COATING BEFORE APPLICATION OF THE FINISH COAT, WHICH SHALL CONSIST OF BAKED WHITE ENAMEL OR PORCELAIN ENAMEL. THE LENS SHALL BE ONE PIECE, OF HIGH-IMPACT-RESISTANT ACRYLIC, AND SHALL HAVE SMOOTH EXTERIOR SURFACE AND STIPPLED OR PEBBLED INTERIOR SURFACE. THE LENS SHALL BE SECURED TO THE HOUSING WITH CAPTIVE MOLDED PLASTIC OR STAINLESS STEEL SPRING LATCHES. A CONTINUOUS GASKET SHALL BE PROVIDED TO FORM A VAPOR SEAL BETWEEN THE LENS AND THE FIXTURE BODY. ALL OPENINGS IN THE HOUSING FOR MOUNTING, CONDUIT, ETC., SHALL BE CAPABLE OF FORMING A VAPOR-TIGHT SEAL. BALLAST(S) SHALL BE COLD WEATHER TYPE FOR STARTING TEMPERATURES DOWN TO MINUS 20 DEGREES F. STANDARD BALLAST(S) SHALL BE THE CLASS P, HIGH POWER FACTOR TYPE APPROVED FOR THE APPLICATION BY THE CERTIFIED BALLAST MANUFACTURERS. FIXTURE SHALL BE PREWIRED, AND PROVIDED WITH LAMPS THAT ARE PROPERLY MATED TO THE BALLAST OPERATING CHARACTERISTICS.

FIXTURE MARK C

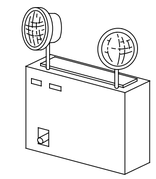

TYPE 603

UNIT SHALL CONFORM TO IEC 60598-2-22 AND SHALL HAVE AN IP20 RATED ENCLOSURE. THE UNIT SHALL BE RATED FOR USE AT VOLTAGE OF LIGHTING CIRCUIT. FIXTURE SHALL HAVE 2 x 20W TUNSGSTEN HALOGEN SPOT LIGHTS. FOLLOWING SUSTAINED LOSS OF THE NORMAL POWER SUPPLY, THE UNIT SHALL BE CAPABLE OF AUTOMATICALLY AND INSTANTANEOUSLY ILLUMINATING THE TWO 12-VOLT LIGHTING FIXTURES FOR A PERIOD OF NOT LESS THAN 3 HOURS AT A BATTERY VOLTAGE IN EXCESS OF 87.5 PERCENT OF THE NOMINAL VOLTAGE RATING.THE BATTERY SHALL BE DESIGNED TO BE MAINTENANCE FREE DURING THE EXPECTED BATTERY LIFE, AND SHALL BE WARRANTED FOR NOT LESS THAN 3 YEARS FROM THE DATE OF PURCHASE OF THE UNIT, AND SHALL BE FIELD REPLACEABLE WITHOUT REQUIRING REMOVAL OF OTHER COMPONENTS. THE BATTERY CHARGER SHALL BE THE SOLID-STATE TYPE AND SHALL PROVIDE A CONTINUOUS, VARIABLE, CURRENT LIMITED, FILTERED, AND REGULATED CHARGE RATE. THE BATTERY AND CHARGER SHALL BE CONTAINED IN A STEEL CABINET NOT LESS THAN 18 GAUGE THICKNESS WITH AN ENAMEL FINISH, UNLESS OTHERWISE APPROVED, WHICH SHALL BE EQUIPPED WITH A PUSH-TO-TEST SWITCH. MOUNTING BRACKETS OR SHELF SHALL BE PROVIDED, COMPLETE WITH ALL MOUNTING HARDWARE, ALL WITH A FINISH TO MATCH THE FINISH OR COLOR OF THE CABINET. THE UNIT SHALL BE PREWIRED AND EQUIPPED WITH TWO 12-VOLT, 20 WATT FLOODLIGHTS AS INDICATED.

FIXTURE MARK D

TYPE: PH8

FEATURES
LAMP TYPE: 250W METAL HALIDE
PROFILE: 1 LAMP
SHIELDING: DROP-DISH PRISMATIC REFRACTOR
MOUNTING: RIGID STEM WITH SWIVEL BALL ALIGNER
BALLAST: HIGH POWER FACTOR, CORE & COIL, CWA

OPTIONS
LAMP TYPE: MH: 175W
MOUNTING: SURFACE
BALLAST: HI-LOW, REMOTE

NOM. DIMENSIONS 635 mm X 711 mm (25" H X 28" DIA)

GENERAL DESCRIPTION
HOUSING: DIE-CAST ALUMINUM BALLAST HOUSING WITH HEAT SINK

REFLECTORS: SPUN OR HYDRO-FORMED ALUMINUM FOR LOW GLARE SHIELDING; ANODIZED FINISH

FINISH: NATURAL ALUMINUM, ANODIZED OR CLEAR LACQUERED

PENDANT MOUNTED METAL HALIDE LOW BAY INDUSTRIAL

FIXTURE MARK E

SEALED BEAM SPOTLIGHT, MOUNTED TO GUARD TOWER ROOF, WITH 1000 WATT HALOGEN NARROW SPOT PAR 56 LAMP. SPOTLIGHT SHALL BE PROVIDED WITH TWIST LEVER CONTROL, MINIMUM 10" DIAMETER LIGHT HEAD, WORKING RANGE OF 1/2 MILE, COUPLING FOR OPERATION FROM GUARD TOWER PLATFORM AND RATED FOR OUTDOOR ROUGH SERVICE.

FIXTURE MARK F

TYPE: XF2

FEATURES
LAMP TYPE: T5,8W
PROFILE: 1 LAMP
MOUNTING: UNIVERSAL
SHIELDING: FLAT SHEET ACRYLIC
LETTERS: GREEN
NOM. DIMENSIONS: 400mm W x 185mm H x 85mm D

GENERAL DESCRIPTION

HOUSING: DIE-CAST ALUMINUM OR 20 GA. CRS, HARDWARE FINISH TO MATCH HOUSING FINISH.
SIGN TO COMPLY WITH EN 60598-2.22

ELECTRICAL: 230/240 VOLT AC, 50/60 HZ -

OTHER: BATTERY BACKUP TO MAINTAIN OPERATION FOR MINIMUM 3 HOUR DURATION

FLOURESCENT STENCIL FACE EXIT SIGN

UNLESS OTHERWISE NOTED, LINEAR DIMENSIONS SHOWN ARE IN MILLIMETERS.

SYMBOL	DESCRIPTION	DATE	APP

DESIGNED BY: MM
DATE: 19 January 2009
DWN BY: MM
SUBMITTED BY:
CHK BY: SE
FILE NO.: AF0701 ♦-EL02DT

US Army Corps of Engineers
Transatlantic Programs Center

AFGHAN NATIONAL POLICE
UP DISTRICT HEADQUARTERS
(2 STORY)
AFGHANISTAN
STANDARD DETAILS
STANDARD LIGHTING DETAILS

SHEET REFERENCE NUMBER:
SE-2

$DATE$
$FILE$

FIXTURE MARK G

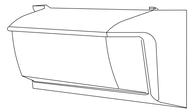

TYPE 502
HIGH INTENSITY DISCHARGE FIXTURE FOR EXTERIOR WALL MOUNTING, MEDIUM OUTPUT

FIRST–SUFFIX	DESCRIPTION RATED FOR:
A	50 WATT HIGH PRESSURE SODIUM LAMP
B	70 WATT HIGH PRESSURE SODIUM LAMP
C	100 WATT HIGH PRESSURE SODIUM LAMP
D	150 WATT HIGH PRESSURE SODIUM LAMP
E	250 WATT METAL HALIDE LAMP

FIXTURE SHALL CONFORM TO UL 1572 AND SHALL BE RATED FOR USE IN WET LOCATIONS. THE FIXTURE HOUSING, DOOR ASSEMBLY, AND BACKPLATE SHALL BE DIE–CAST ALUMINUM. THE DOOR ASSEMBLY SHALL HAVE INTEGRAL CAST ALUMINUM HINGES. THE DOOR ASSEMBLY SHALL BE HELD SECURLY TO THE FIXTURE HOUSING WITH A STAINLESS STEEL SAFETY STRAP WHEN THE DOOR IS IN THE OPEN POSITION. THE ASSEMBLY SHALL BE HELD FIRMLY AGAINST A SEALING GASKET BETWEEN THE FIXTURE DOOR AND HOUSING BY STAINLESS STEEL LATCHES OR WITH STAINLESS STEEL OR BRASS CAPTIVE SCREWS WHEN THE FIXTURE DOOR IS CLOSED. THE REFACTOR SHALL BE PRISMATIC BOROSILICATE GLASS OR POLYCARBONATE RESIN. THE REFACTOR SHALL BE GASKETED AND SECURLY HELD IN THE DOOR FRAME, BUT SHALL BE EASILY REMOVED FOR REPLACEMENT WITH A COMMON TOOL. THE REFLECTOR SHALL BE ALUMINUM WITH THE MANUFACTURER'S STANDARD COMMERCIAL PRODUCT FINISH SUITABLE FOR THE TYPE AND RATING OF THE LAMP. THE FIXTURE SHALL HAVE MANUFACTURERS STANDARD PROTECTIVE COATING. CAST KNOCKOUTS SHALL BE PROVIDED IN THE BACKPLATE FOR RECESSED OUTLET BOX MOUNTING. BALLAST SHALL BE OF THE HIGH POWER FACTOR TYPE. BALLAST SHALL BE OF THE LEAD–PEAK AUTOTRANSFORMER TYPE FOR METAL HALIDE LAMPS AND THE REGULATING TYPE FOR HIGH PRESSURE SODIUM LAMPS. BALLAST SHALL BE CAPABLE OF STARTING AND OPERATING THE LAMP AT AMBIENT TEMPRATURES FROM MINUS 20 DEGREES F TO 105 DEGREES F. THE FIXTURE SHALL BE PREWIRED, AND SHALL HAVE A FIELD ADJUSTABLE, MOGUL BASE GLAZED PORCELAIN LAMPHOLDER. FIXTURE SHALL HAVE FACTORY FITTED INTEGRAL PHOTOCELL.

ABOVE DESCRIPTION IS PROVIDED TO ESTABLISH ACCEPTABLE QUALITY OF FIXTURE. CONTRACTOR SHALL PROVIDE ALOCALLY AVAILABLE SIMILAR QUALITY FIXTURE COMPLYING WITH IEC (EUROPEAN),BS (BRITISH STANDARD), VDE/DIN (GERMAN STANDARD) AND IN COMPLIANCE WITH THE REQUIREMENTS OF STATE OF QATAR MINISTRY OF ELECTRICITY AND WATER.

FIXTURE MARK I

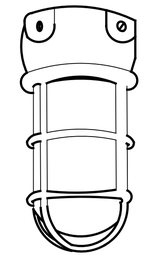

TYPE SF11

FEATURES

LAMP TYPE: INCCANDESCENT BULB: 100W
GLASS GLOBE CLEAR, BLUE, RED, OR BLACK AS INDICATED ON THE DRAWINGS
PROFILE: 1 LAMP
SHIELDING: CLEAR GLASS GLOBE

OPTIONS

GLASS GLOBE: CLEAR, RED, BLUE, OR BLACK
LAMP TYPE: 75W, 100W, 150W
MOUNTING: PENDANT OR SURFACE
SHIELDING: HEAT RESISTANT

NOM. DIMENSIONS: 111mm X 251mm

GENERAL DESCRIPTION

HOUSING: 30 PERCENT GLASS FILLED THERMOPLASTIC POLYSTER
ELECTRICAL: 220 – 240 VOLT
FINISH: MOLDED IN NON–GRAYING FINISH

SURFACE MOUNTED INCANDESCENT
VAPOR TIGHT JELLY JAR WITH WIRE GUARD

NOT TO SCALE

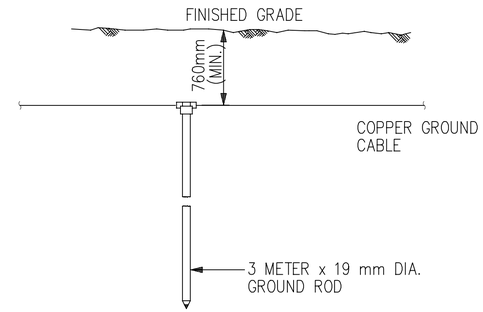

NOTES:

1. CONDUCTOR SIZE SHALL BE AS INDICATED ON PLANS.
2. EXOTHERMIC WELDS SHALL BE AS RECOMMENDED BY MANUFACTURER FOR THE SIZE OF CONNECTION AND MATERIAL INVOLVED.SEE DETAIL 5 ON SHEET SE–7.

BELOW GRADE GROUNDING ROD DETAIL

NOT TO SCALE

DETAIL 1/1
NOT TO SCALE

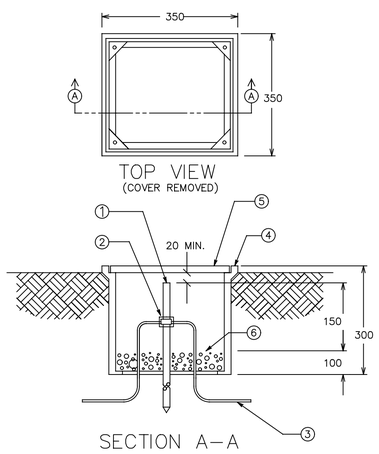

MATERIAL LIST

1. GROUND ROD
2. EXOTHERMIC WELD
3. GROUNDING CONDUCTOR 70mm² COPPER
4. POLYMER CONCRETE FIBERGLASS REINFORCED BOX
5. COVER FOR ABOVE BOX
6. GRAVEL OR CRUSHED STONE

GROUND ROD ACCESS
BOX INSTALLATION DETAIL

NOT TO SCALE

DETAIL 2/1
NOT TO SCALE

UNLESS OTHERWISE NOTED, LINEAR DIMENSIONS SHOWN ARE IN MILLIMETERS.

SYMBOL	DESCRIPTION	DATE	APP

DESIGNED BY: MM
DATE: 19 January 2009
DWN BY: MM
SUBMITTED BY:
CHK BY: SE
FILE NO.: AF0701 ↳ EL03DT

US Army Corps of Engineers
Transatlantic Programs Center

AFGHAN NATIONAL POLICE
UP DISTRICT HEADQUARTERS
(2 STORY)
AFGHANISTAN
STANDARD DETAILS
STANDARD LIGHTING DETAILS

SHEET REFERENCE NUMBER:
SE–3

$DATE$
$FILE$

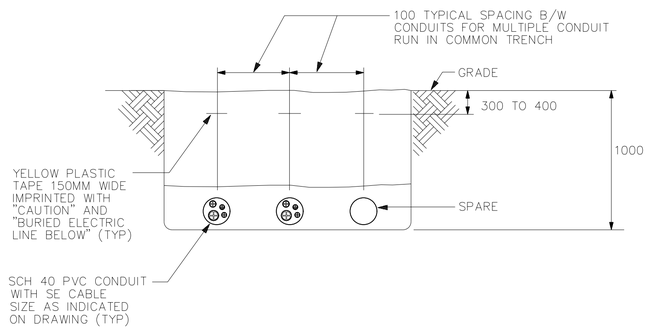

SECONDARY DISTRIBUTION CONDUIT TRENCH DETAIL

NOT TO SCALE

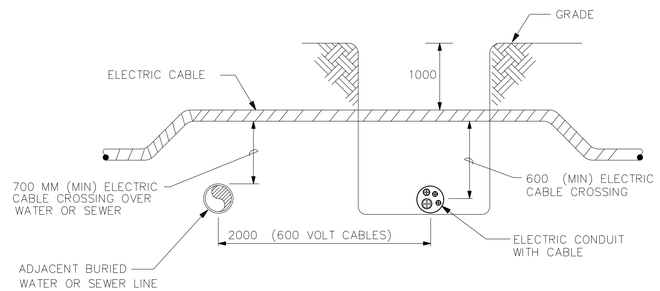

UNDERGROUND UTILITIES CROSSING DETAIL

NOT TO SCALE

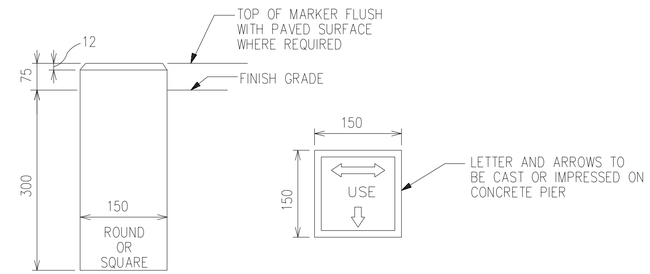

DIRECT BURIED CABLE MARKER DETAIL

NOT TO SCALE

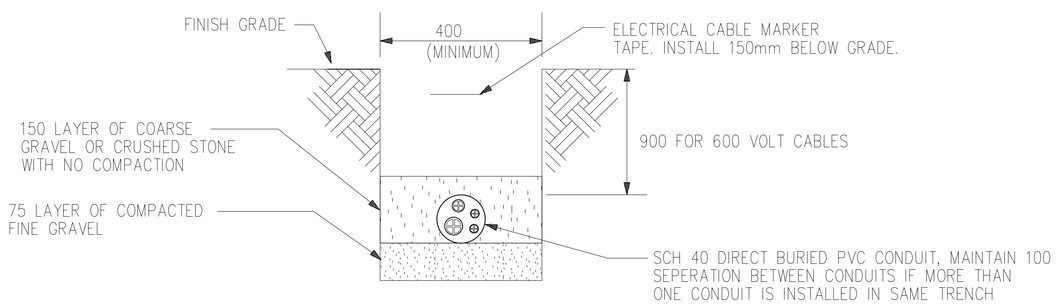

DIRECT BURIED DUCT DETAIL

NOT TO SCALE

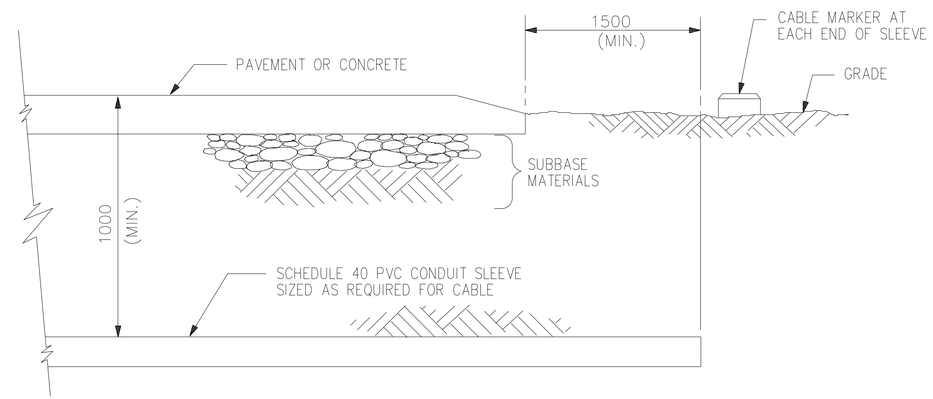

UNDER ROADWAY DUCT CROSSING SLEEVE DETAIL

NOT TO SCALE

UNLESS OTHERWISE NOTED, LINEAR DIMENSIONS SHOWN ARE IN MILLIMETERS.

SYMBOL	DESCRIPTION	DATE	APP

DESIGNED BY: MM
DATE: 19 January 2009
DWN BY: MM
SUBMITTED BY:
CHK BY: SE
FILE NO.: AF0701 $-EL040T

US Army Corps of Engineers
Transatlantic Programs Center

AFGHAN NATIONAL POLICE
UP DISTRICT HEADQUARTERS
(2 STORY)
AFGHANISTAN
STANDARD DETAILS
DUCTBANK DETAILS

SHEET REFERENCE NUMBER:
SE-4

$DATE$
$FILE$

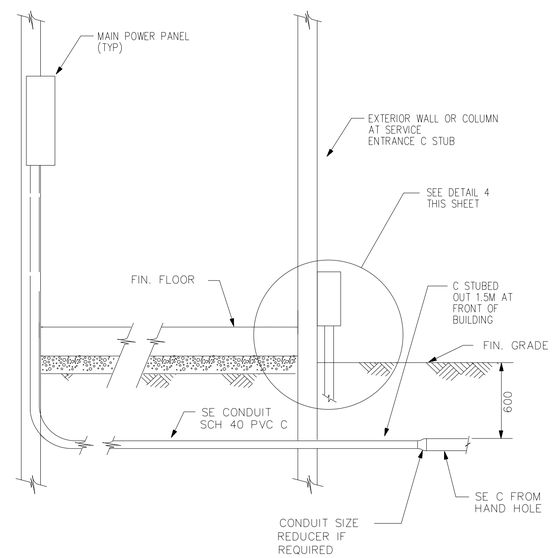

SERVICE PANEL CABLE ENTRANCE DIAGRAM

NOT TO SCALE

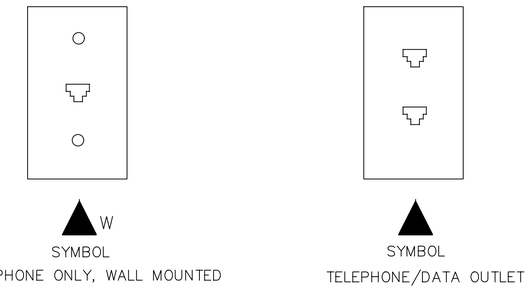

TELEPHONE AND DATA OUTLET DETAILS

NOT TO SCALE

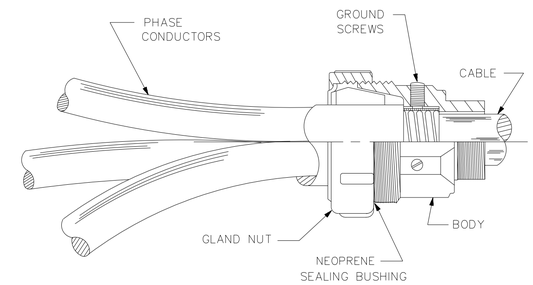

TYPICAL 600V CABLE TERMINATOR DETAIL

NOT TO SCALE

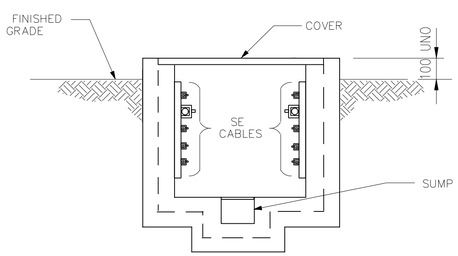

HANDHOLE CABLE INSTALLATION

NOT TO SCALE

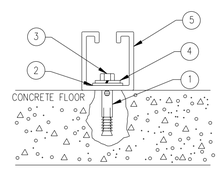

CHANNEL STRUT INSTALATION

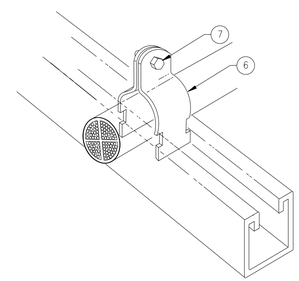

CABLE CLAMP INSTALLATION

NOT TO SCALE

CHANNEL SYSTEM LIST OF MATERIALS					
ITEM	SML	DESCRIPTION	PART NO/NSN	UI	QTY
1		SHIELD, EXPANSION			
2		WASHER, FLAT 3/8 " ID			
3		BOLT,LAG,HEX HEAD, 3/8 "-16 X 1 1/4 "			
4		WASHER, LOCK 3/8 " ID			
5		CHANNEL, CONT. SLOTTED 1-5/8"			
6		CONDUIT / CONDUCTOR CLAMP			
7		SLOTTED HEX MACHINE SCREW & SQUARE NUT			

CONDUIT / CONDUCTOR CHANNEL SYSTEM INSTALLATION DETAIL

NOT TO SCALE

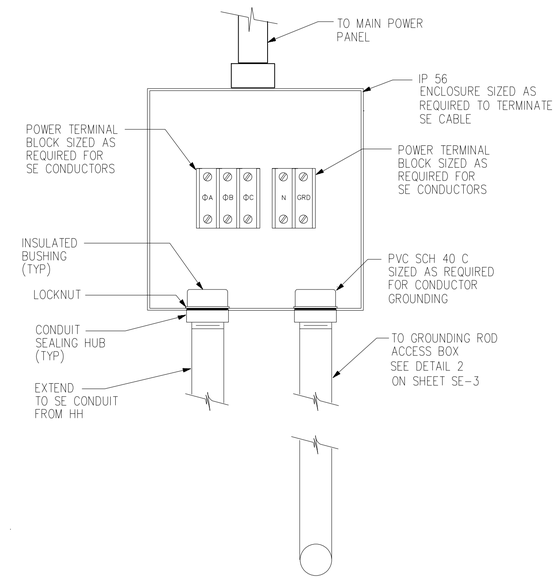

SE JUNCTION BOX

NOT TO SCALE

DETAIL 4

NOT TO SCALE

UNLESS OTHERWISE NOTED, LINEAR DIMENSIONS SHOWN ARE IN MILLIMETERS.

SYMBOL	DESCRIPTION	DATE	APP

DESIGNED BY: MM
DATE: 19 January 2009
DWN BY: MM
SUBMITTED BY:
CHK BY: SE
FILE NO.: AF0701 ♦-ELOSDT

US Army Corps of Engineers
Transatlantic Programs Center

AFGHAN NATIONAL POLICE
UP DISTRICT HEADQUARTERS
(2 STORY)
AFGHANISTAN
STANDARD DETAILS
STANDARD ELECTRICAL DETAILS

SHEET REFERENCE NUMBER:
SE-5

$DATE$
$FILE$

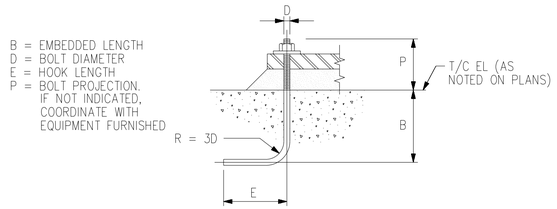

NOTE:
UNLESS OTHERWISE INDICATED, TYPE V OR VI ANCHOR RODS MAY BE USED AT THE CONTRACTOR'S OPTION

SCHEDULE			
D (IN)	B (mm)	E (mm)	REMARKS
3/8 "	125	125	
1/2 "	150	150	
5/8 "	200	180	
3/4 "	255	220	
7/8 "	305	280	
1"	355	330	

TYPE V ANCHOR RODS
HOOKED BOLT

SCHEDULE			
D (IN)	B (mm)	E (mm)	REMARKS
3/8 "	180	75	
1/2 "	230	75	
5/8 "	280	100	
3/4 "	355	125	
7/8 "	405	180	
1"	485	200	

TYPE VI ANCHOR RODS
HOOKED BOLT

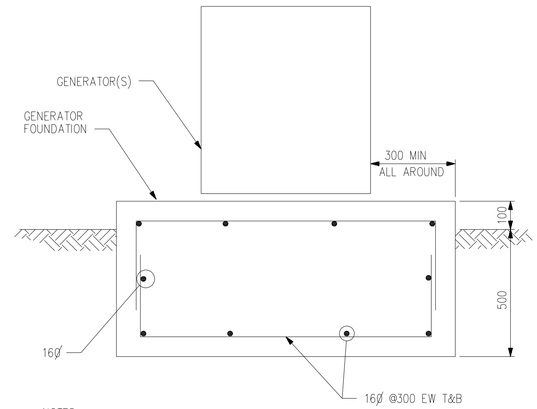

NOTES:
1. SEE DRAWING XE-1 FOR GENERATOR LOCATIONS.
2. COORDINATE PAD SIZE AND ANCHOR BOLT REQUIREMENTS WITH THE EQUIPMENT SUPPLIED.

TYPICAL EXTERIOR GENERATOR FOUNDATION
NOT TO SCALE

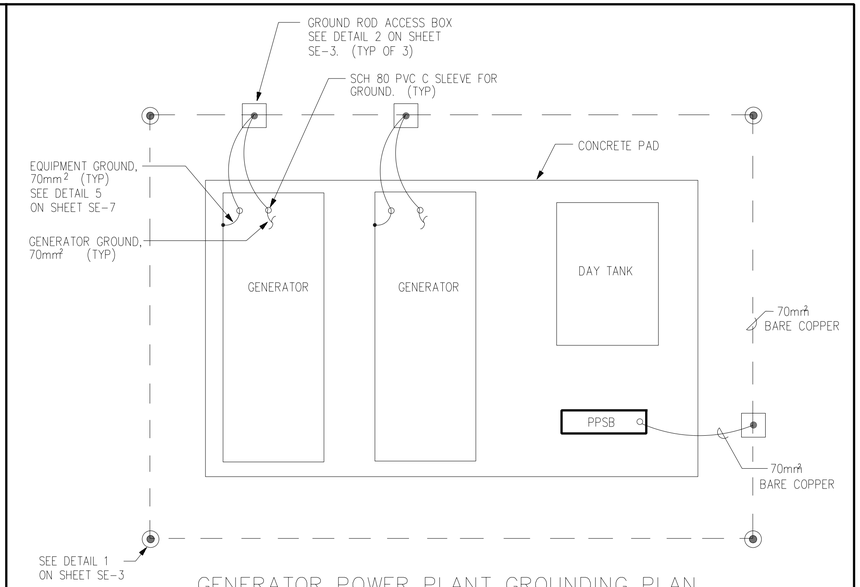

GENERATOR POWER PLANT GROUNDING PLAN
NOT TO SCALE

NOTES:
1. GROUNDING COUNTERPOISE SHALL BE 1.5M AWAY FROM GENERATOR PAD FOUNDATION AND 0.760M BELOW FINISHED GRADE.
2. ALL GROUNDING CONNECTIONS SHALL BE EXOTHERMIC WELD CONNECTIONS, SEE DETAIL 5 ON SHEET SE-7.
3. THE DAY TANK MAY BE AN INTEGRAL PART OF EACH GENERATOR SET.

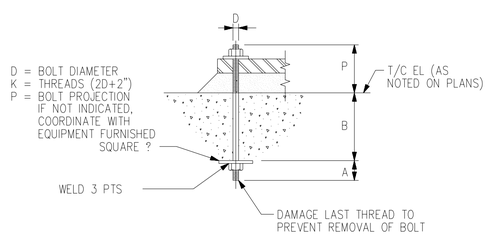

SCHEDULE				
D	A	B	SQUARE ?	REMARKS
3/4	50mm	250mm	?13x75x75	
7/8	75mm	300mm	?16x90x90	
1 1/8	75mm	400mm	?20x100x100	
1 1/4	75mm	460mm	?20x110x110	

TYPE II ANCHOR RODS
UNSLEEVED BOLT

TYPICAL ANCHOR ROD DETAILS
NOT TO SCALE

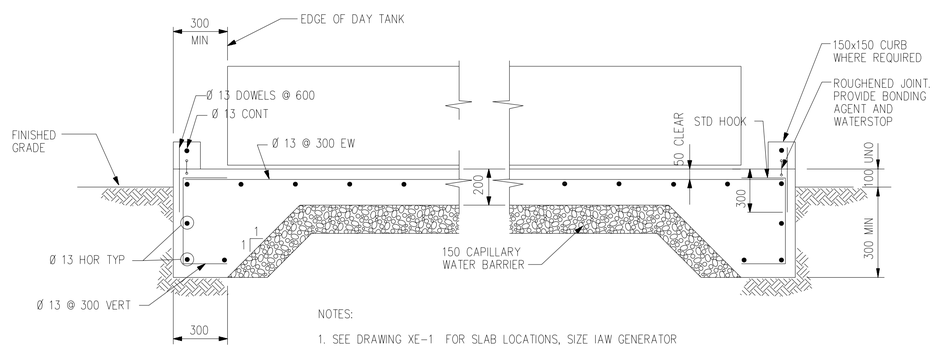

NOTES:
1. SEE DRAWING XE-1 FOR SLAB LOCATIONS, SIZE IAW GENERATOR DAY TANK REQUIREMENTS, COORDINATE WITH EQUIPMENT FURNISHED. PROVIDE MINIMUM EDGE CLEARANCE AS INDICATED.

TYPICAL DAY TANK SLAB
NOT TO SCALE

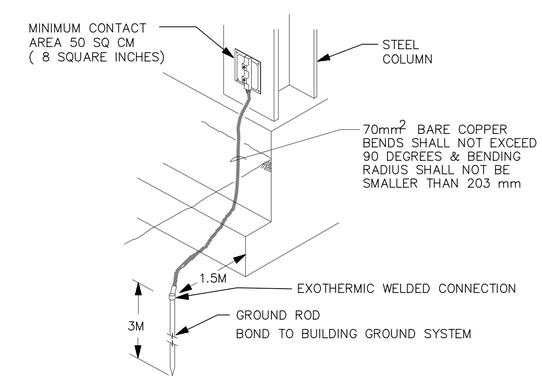

COLUMN GROUNDING DETAIL
NOT TO SCALE

DETAIL 6
NOT TO SCALE

UNLESS OTHERWISE NOTED, LINEAR DIMENSIONS SHOWN ARE IN MILLIMETERS.

SYMBOL	DESCRIPTION	DATE	APP
*	ELEVATION	19/03/2007	

DESIGNED BY: MM
DATE: 19 January 2009
DWN BY: MM
SUBMITTED BY:
CHK BY: SE
FILE NO.: AF0701 ♦-EL060T

US Army Corps of Engineers
Transatlantic Programs Center

AFGHAN NATIONAL POLICE
UP DISTRICT HEADQUARTERS
(2 STORY)
AFGHANISTAN
STANDARD DETAILS
POWER PLANT DETAILS

SHEET REFERENCE NUMBER:
SE-6

$DATE$
$FILE$

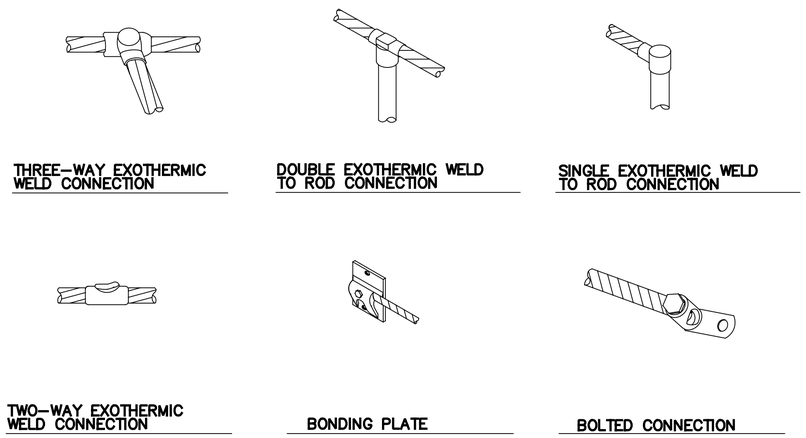

GROUNDING CONDUCTOR CONNECTION DETAILS
NOT TO SCALE

DETAIL 5
NOT TO SCALE

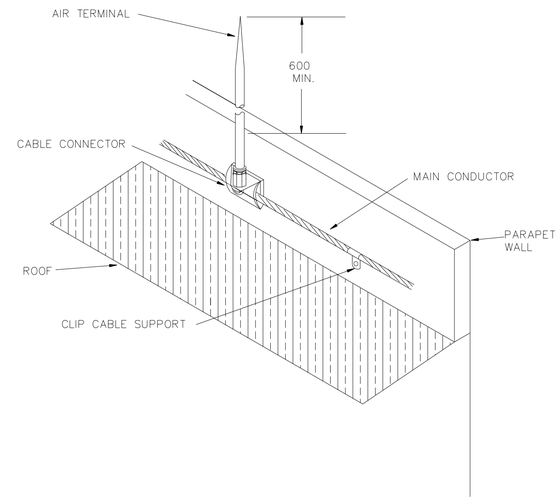

AIR TERMINAL DETAIL
NOT TO SCALE

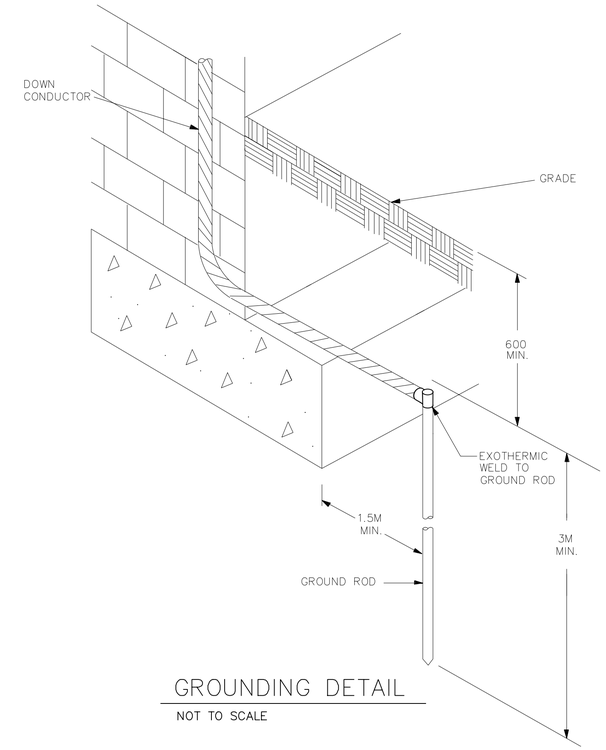

GROUNDING DETAIL
NOT TO SCALE

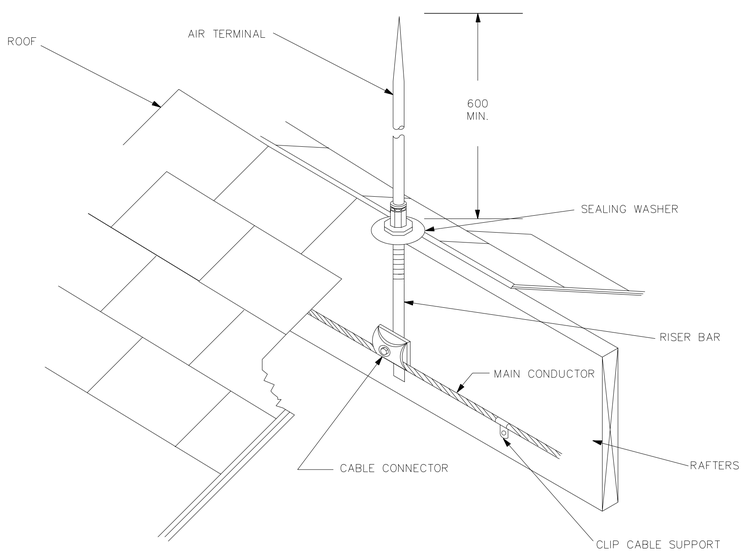

AIR TERMINAL DETAIL
NOT TO SCALE

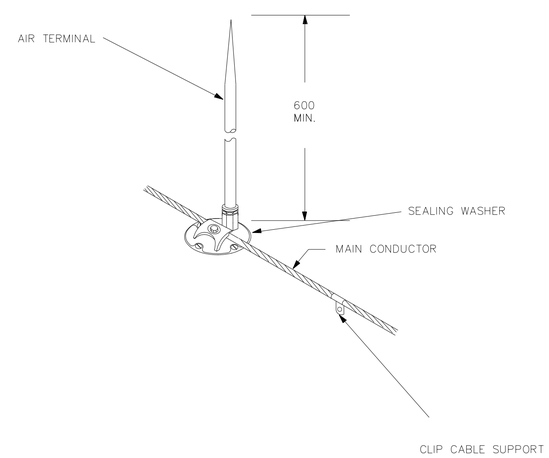

AIR TERMINAL DETAIL
NOT TO SCALE

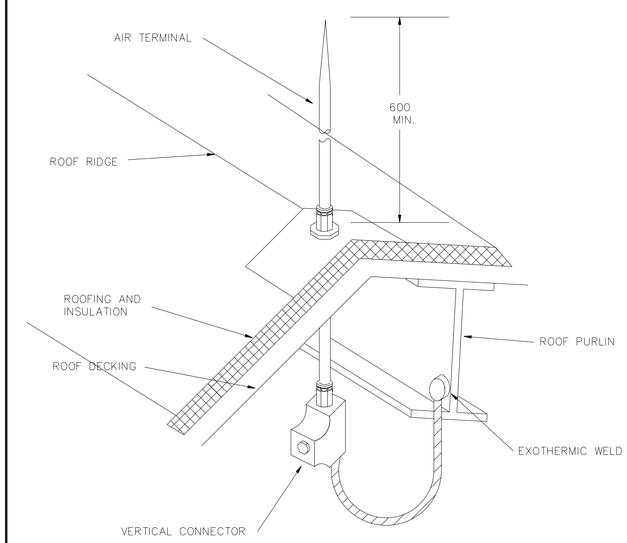

AIR TERMINAL DETAIL
NOT TO SCALE

UNLESS OTHERWISE NOTED, LINEAR DIMENSIONS SHOWN ARE IN MILLIMETERS.

SYMBOL	DESCRIPTION	DATE	APP

DESIGNED BY: MM
DATE: 19 January 2009
DWN BY: MM
SUBMITTED BY:
CHK BY: SE
FILE NO.: AF0701 ↓-EL07DT

US Army Corps of Engineers
Transatlantic Programs Center

AFGHAN NATIONAL POLICE
UP DISTRICT HEADQUARTERS
(2 STORY)
AFGHANISTAN
STANDARD DETAILS
LIGHTNING PROTECTION DETAILS

SHEET REFERENCE NUMBER:
SE-7

$DATE$
$FILE$

CONSTRUCTION REQUIREMENTS				
CLEAR MINIMUM INSIDE REQUIREMENTS FOR INSTALLATION AND MAINTENANCE PURPOSES				
TYPE	HEIGHT	LENGTH	WIDTH	SUMP DEPTH
HH	1.2M	1.2M	1.2M	0.3M

MINIMUM CONCRETE THICKNESS	
HANDHOLE WALLS TOP, AND FLOORS	SUMP WALLS AND FLOOR
150mm	100mm

MINIMUM REINFORCING

1. BARS WILL BE A MINIMUM OF 130 ROUND DEFORMED.
2. WALLS AND FLOOR WILL HAVE BARS AT 200mm MAXIMUM ON CENTERS WITH A MINIMUM 300mm HOOK AT CORNERS AND INTERSECTIONS.
3. THE TOP SHALL HAVE BARS INSTALLED AS SHOWN AT A MINIMUM OF 50mm FROM THE OPENING AND WITH A MINIMUM 100mm SPACING BETWEEN BARS.

NOTE: REINFORCING SHALL BE INCREASED WHERE REQUIRED TO SUIT ACTUAL INSTALLATION. MINIMUM REQUIREMENTS ARE FOR A H20 WHEEL LOADING (ASSHTO).

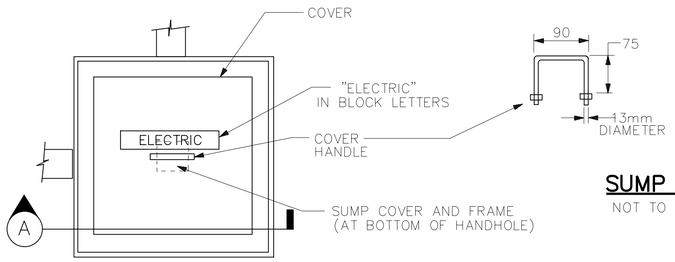

HANDHOLE COVER DETAIL
NOT TO SCALE

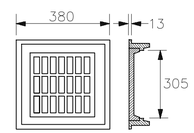

SUMP FRAME AND COVER DETAIL
NOT TO SCALE

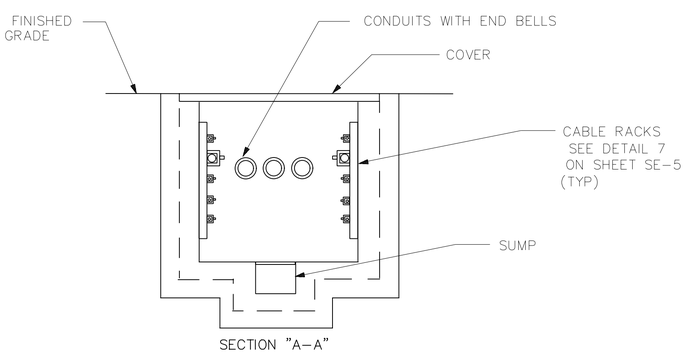

HANDHOLE DETAIL
NOT TO SCALE

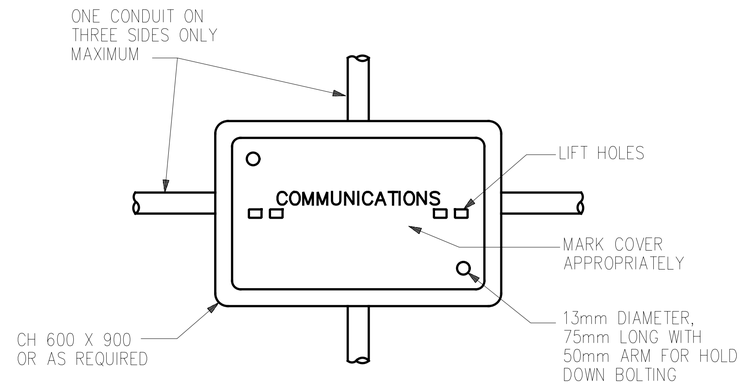

PLAN

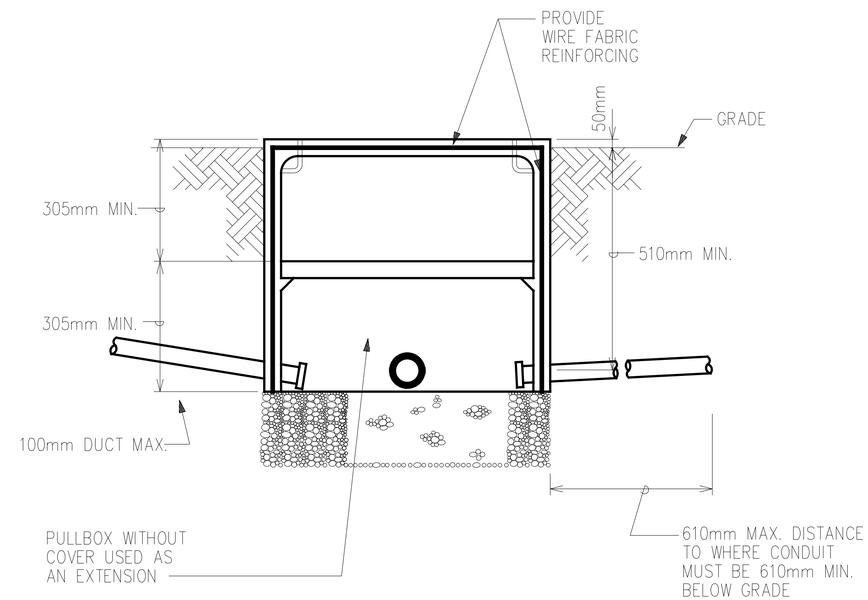

ELEVATION

COMMUNICATIONS AND SIGNAL CIRCUIT

PULLBOX DETAIL

CONTRACTOR MAY PROVIDE POURED CONCRETE BOX AS OPTION, CONTRACTOR MUST SUBMIT SHOP DRAWINGS

UNLESS OTHERWISE NOTED, LINEAR DIMENSIONS SHOWN ARE IN MILLIMETERS.

SYMBOL	DESCRIPTION	DATE	APP
*	ELEVATION	19/03/2007	

DESIGNED BY: MM
DWN BY: MM
CHK BY: SE
DATE: 19 January 2009
SUBMITTED BY:
FILE NO.: AF0701 ♦-EL080T

US Army Corps of Engineers
Transatlantic Programs Center

AFGHAN NATIONAL POLICE
UP DISTRICT HEADQUARTERS
(2 STORY)
AFGHANISTAN
STANDARD DETAILS
HAND HOLE DETAILS

SHEET REFERENCE NUMBER:
SE-8

$DATE$
$FILE$